AGENCY FOR INTERNATIONAL DEVELOPMENT
WASHINGTON, D C 20523
BIBLIOGRAPHIC INPUT SHEET

FOR AID USE ONLY
Batch 80

1. SUBJECT CLASSIFICATION
A. PRIMARY: Development and economics — DP00-0000-0000
B. SECONDARY: Transportation

2. TITLE AND SUBTITLE
Standard specifications for highways and bridges,1975

3. AUTHOR(S)
(101) Jorgensen (Roy) Assoc.,Inc.,Gaithersburg,Md.

4. DOCUMENT DATE: 1975
5. NUMBER OF PAGES: ~~807p.~~ 809p.
6. ARC NUMBER: ARC 625.7.J82b

7. REFERENCE ORGANIZATION NAME AND ADDRESS
Jorgensen

8. SUPPLEMENTARY NOTES (Sponsoring Organization, Publishers, Availability)

9. ABSTRACT

10. CONTROL NUMBER
PN-AAF-356

11. PRICE OF DOCUMENT

12. DESCRIPTORS
Bridges
Construction
Construction equipment
Construction materials
Design criteria
Highways
Manuals
Specifications

13. PROJECT NUMBER

14. CONTRACT NUMBER
AID/otr-C-1420

15. TYPE OF DOCUMENT

AID 590-1 (4-74)

STANDARD SPECIFICATIONS FOR HIGHWAYS AND BRIDGES

1975 EDITION

A.I.D.
Reference Center
Room 1656 NS

PREPARED FOR

UNITED STATES AGENCY FOR

INTERNATIONAL DEVELOPMENT

WASHINGTON, D. C.

U.S.A.

ACKNOWLEDGEMENTS

In compiling this book of standard specifications for the Highway Administration, the Roy Jorgensen organization wishes to gratefully acknowledge the following sources of information and their specification material, many portions of which were revised and incorporated into this book:

The American Association of State Highway Officials and its many texts related to specifications,

The States of California, Indiana, Kansas, Montana, New Jersey, and Vermont and their books of standard specifications for highways and bridges,

The Asphalt Institute,
The National Bureau of Standards, and

Other, no less important, but lesser utilized sources too numerous to enumerate.

Financial assistance to compile and publish this book was provided by the United States Agency for International Development.

LEWIS M. CHITTIM
Chief of Party
Roy Jorgensen Assoc., Inc.

TABLE OF CONTENTS

SECTION		TITLE	PAGE
SECTION	100.00	GENERAL PROVISIONS	
	101.00	Definitions of Terms	2
	102.00	Contract Type and Contracting Procedure	13
	103.00	Bidding Requirements and Conditions	17
	104.00	Award and Execution of Contract	26
	105.00	Scope of Work	30
	106.00	Control of Work	44
	107.00	Control of Materials	61
	108.00	Legal Obligations and Responsibility to the Public	70
	109.00	Prosecution and Progress	83
	110.00	Measurement and Payment	96
SECTION	200.00	EARTHWORK	
	201.00	Clearing Site	110
	202.00	Roadway Excavation	119
	203.00	Embankment	131
	204.00	Structure Excavation	141
	205.00	Subsurface Structure Excavation	142
	206.00	Channel and Ditch Excavation	148
	207.00	Borrow Excavation	150
SECTION	300.00	BASE COURSES	
	300.00	Description	156
	301.00	Plant-Mix Bituminous Base Course	156
	302.00	Road-Mix Base Course	156
	303.00	Aggregate Base Course	157

SECTION		TITTE	PAGE
	304.00	Macadam Base	161
	305.00	Lime Treated Subgrade	165
	306.00	Roadbed Modification	169
	307.00	Watering	172
	308.00	Aggregate Surfacing	175
	309.00	Repaving of Existing Surface	179
	310.00	Stockpiling Surfacing Aggregate	182
	311.00	Soil Cement Base Course	183
SECTION	400.00	BITUMINOUS PAVEMENT	
	401.00	Bituminous Concrete	194
	402.00	Bituminous Base Course	221
	403.00	Bituminous Prime or Tack Coat	225
	404.00	Bituminous Surface Treatment	229
	404.50	Penetration Aggregate Surface Course	241
	405.00	Road-Mix Bituminous Pavement	245
	406.00	Seal Coat	255
	407.00	Bituminous Materials	261
SECTION	500.00	STRUCTURES	
	501.00	Structure Excavation	270
	502.00	Sheet Piles	276
	503.00	Bearing Piles	278
	504.00	Concrete Masonry	293
	505.00	Reinforcement	339
	506.00	Ashlar Masonry	345
	507.00	Mortar Rubble Masonry	354
	508.00	Dry Rubble Masonry	358
	509.00	Brick Masonry	360
	510.00	Steel Structures Fabrication	362

SECTION		TITLE	PAGE
	511.00	Bronze or Copper-Alloy Bearing and Expansion Plates	452
	512.00	Steel Grid Flooring	454
	513.00	Railings	459
	514.00	Painting Metal Structures	462
	515.00	Protection of Embankments & Slopes	469
	516.00	Concrete Cribbing	480
	517.00	Waterproofing	482
	518.00	Dampproofing	489
	519.00	Name Plates	491
	520.00	Timber Structures	492
	521.00	Preservative Treatments for Timber	512
	522.00	Timber Cribbing	514
	523.00	Structural Plate Pipes, Pipe Arches and Arches	518
	524.00	Wearing Surfaces	522
	525.00	Elastomeric Bearings	523
	526.00	Construction of Tunnel Using Steel Tunnel Liner Plates	527
	527.00	Temporary Bridges	530
	550.00	Portland Cement Concrete Pavement	533
SECTION	600.00	MISCELLANEOUS CONSTRUCTION	
	601.00	Culverts and Storm Drains	556
	602.00	Manholes, Inlets and Catch Basins	563
	603.00	Underdrains	568
	604.00	Guard Rail	572
	605.00	Fences	575
	606.00	Sidewalks	578
	607.00	Curb-Curb and Gutter	582

SPECIFICATIONS FOR HIGHWAY MATERIALS

TABLE OF CONTENTS
SECTION 100 GENERAL PROVISIONS

SECTION	TITLE	PAGE
101	Definition of Terms	2
102	Contract Type and Contracting Procedure	13
103	Bidding Requirements and Conditions	17
104	Award and Execution of Contract	26
105	Scope of Work	30
106	Control of Work	44
107	Control of Materials	61
108	Legal Obligations and Responsibility to the Public	70
109	Prosecution and Progress	83
110	Measurement and Payment	96

SECTION 101 DEFINITION OF TERMS

ABBREVIATIONS

A.A.S.H.O.	American Association of State Highway Officials
A.S.C.E.	American Society of Civil Engineers
A.S.T.M.	American Society for Testing and Materials
A.N.S.I.	American National Standards Institute
A.W.S.	American Welding Society
H.A.	Highway Administration

GLOSSARY

ADDITIONAL WORK :

An increase in the quantity of a contract item.

ADVERTISEMENT :

The same as Invitation For Bids.

AWARD :

The acceptance by HA of a proposal.

BASE :

The layer or layers of a pavement structure, of specified materials and thickness, placed on the subbase or subgrade for supporting the pavement or surface layer.

BID :

The declaration of costs and prices contained in a proposal.

BIDDER :

An individual, partnership, company, corporation, or a joint venture, submitting a proposal.

BRIDGE :

A structure, including supports, erected over a depression or obstruction such as water, a roadway, or railway, and having a track or passageway for carrying traffic or other moving loads and having a length measured along the center of roadway of more than six (6) meters.

BRIDGE LENGTH :

The greater dimension of a bridge structure measured along the centerline of the roadway between the backs of abutment backwalls or between the extreme ends of the bridge floor, but in no case less than the total clear opening of the structure.

BRIDGE ROADWAY WIDTH :

The clear width of the structure measured at right angles to the longitudinal centerline of the structure between the bottom of the curbs or guard timbers, or in the case of multiple height of curbs, between the bottoms of the lower risers, or if curbs are not used, between the inner faces of parapets .or railings.

CALENDAR DATE OF COMPLETION :

The fixed calendar date on which all work on a project is to be satisfactorily completed.

CALENDAR DAY :

Any day shown on the calendar, beginning and ending at midnight.

CHANGE ORDER :

A written order by the Engineer to the Contractor covering changes in the plans or quantities or both, within the scope of the contract and establishing the basis of payment and time adjustments for the work effected by the changes.

COMPANY :

A firm or business enterprise with limited responsibilities chartered or established in conformity with applicable laws.

CONTRACT

An official, signed agreement between the Government and the Contractor setting forth the obligations and responsibilities of the parties thereto, including, but not limited to, the prosecution of the work, the providing of labor equipment and materials, and the basis of payment.

A contract includes Proposal, Bid, Agreement, Contract Bond, Standard Specifications, Supplemental Specifications, Special Provisions, Construction Plans and Notice to Proceed, all of which together constitute one legal instrument.

CONTRACT ITEM (PAY ITEM) :

A specifically described unit of work for which a quantity and a price are provided in the contract.

CONTRACTOR :

An individual, partnership, company, corporation, or a joint venture contracting with HA for the performance of prescribed works.

CONTRACT TIME :

The period of time prescribed in the contract for completion of the work.

CORPORATION :

A group of individuals who as a body are granted by Government charter certain of the legal powers, rights, privileges, and liabilities of an individual, distinct from those of the individuals making the group.

COST-PLUS PAYMENT

A basis of payment to be used in certain special cases at the discretion of HA whereby the Contractor is compensated at his actual direct costs for labor, insurance, equipment, and materials, plus specified fixed percentages to cover indirect costs and all other compensation.

CULVERT :

Any structure not classified as a bridge which provides an opening under the roadway.

DATE :

Any specified day in a given month and year, including Sundays and official holidays.

DISTRICT ENGINEER :

The HA Engineer who is in responsible charge over all administrative and operational functions of a HA District organization.

ENGINEER :

The Director General of HA, acting directly or through his authorized representative subordinate officers for exercising administrative control and technical inspection of works in progress.

EQUIPMENT :

All machinery, implements, tools, and apparatus, together with the necessary supplies for upkeep and maintenance, for the proper construction and acceptable completion of the work.

EXTRA WORK :

An item of work for which there is no description, quantity or price in the contract as awarded, but found by the Engineer to be essential to the satisfactory completion of the contract within its intended scope.

GOVERNMENT :

The Government acting through its Ministries and administrative subdivisions.

HIGHWAY :

A general term denoting a public way for purposes of

vehicular travel, usually in a rural location, including the entire area within the right-of-way.

HOLIDAY :

The following are legal holidays : every Sunday and holidays stipulated by Government Decree.

INDIVIDUAL :

Sole proprietor of a contracting business.

INSPECTOR :

The Engineer's authorized representative assigned to make detailed inspections of the Contractor's work.

INVITATION FOR BIDS :

The advertisement for proposals on all work or materials supply for which bids are required. Such advertisement will indicate with reasonable accuracy the quantity and location of the work to be done or the character and quantity of material to be furnished and the time and place of the opening of proposals. Invitation For Bids will be distributed without charge to all prospective bidders holding valid HA Contractor Ratings.

JOINT VENTURE :

Two or more individuals, partnerships, companies, or corporations, joined together in any combination for the purpose of bidding and performing contract works, and having essentially the same legal rights and responsibilities as a partnership.

LABORATORY :

The testing laboratory of HA, or any other testing laboratory which may be designated by the Engineer to test materials used in HA works.

LUMP SUM PAYMENT :

A basis of payment whereby the Contractor is paid a fixed

amount for a specified item or items of work, which amount is the total and only compensation for the completed work.

MAJOR AND MINOR CONTRACT ITEMS :

Any item having an original contract value of ten (10) percent or more of the total original contract amount shall be classed as a major item.

MATERIAL :

Any substance specified for use in the construction of the project and its appurtenances.

NOTICE TO PROCEED :

The written notice to the Contractor to begin the contract work. The date stipulated in such notice is the beginning date of contract time.

PARTNERSHIP :

Two (2) more individuals having the same legal rights and pledging to be equally responsible in bidding and performing contract work. Partnerships must be established in conformity with current laws.

PAVEMENT STRUCTURE :

The combination of sub-base, base course, and surface course placed on the subgrade to support the traffic load and distribute it to the roadbed.

PERFORMANCE GUARANTY :

The security given by the Contractor and his surety to guarantee performance of the work in accordance with the provisions of the contract.

PLANS :

The approved plans, profiles, typical cross-sections, working drawings and supplemental drawings, or exact reproductions

thereof, which show the location, character, dimensions, and details of the work to be done.

PROJECT :

The specific section of the highway together with all appurtenances and construction to be performed thereon under the contract.

PROJECT ENGINEER :

The Engineer's authorized representative who is appointed to exercise administrative control and to direct the technical inspection of contract works in progress on HA projects.

PROPOSAL :

The offer of a bidder, on the prescribed form, to perform the work and to furnish the required labor and materials at the prices quoted, for a specific HA project.

PROPOSAL FORM :

The approved form on which HA requires bids to be prepared and submitted for contract work.

PROPOSAL GUARANTY:

The security given with a bid to guarantee that the bidder will enter into a contract if his bid is accepted.

PUBLIC WORKS :

All constructed works built in place on real estate for a public purpose and for a legal administrative agency of the Government. All HA projects are Public Works Projects.

RIGHT-OF-WAY :

A general term denoting land and property, and the public interest therein, acquired for or devoted to public use for purposes of maintaining a highway.

ROADBED :

The graded portion of a highway within top and side slopes,

prepared as a foundation for the pavement structure and shoulders.

ROADSIDE :

A general term denoting the area adjoining the outer edge of the roadway. Extensive areas between the roadways of a divided highway may also be considered as roadside.

ROADWAY :

The portion of a highway within limits of construction.

SHOULDER :

The portion of the roadway contiguous with the traveled way for accommodation of stopped vehicles, for emergency use, and for lateral support of base and surface courses.

SIDEWALK :

That portion of the roadway primarily constructed for the use of pedestrians.

SPECIAL PROVISIONS :

Additions and revisions to the Standard and Supplemental Specifications covering conditions peculiar to an individual project.

SPECIFICATIONS :

A general term meaning these Specifications together with all directions, provisions and requirements pertaining to performance of the work which are included in the contract.

STANDARD DRAWINGS :

Special drawings and sketches, including detailed instruction, where necessary, issued and made available by the Engineer to the Contractor and other interested persons. They will pertain to certain items of work contained in a contract.

STREET :

A general term denoting a public way for purposes of vehicular travel in an urban location, including the entire area within the right-of-way.

STRUCTURES :

A general term denoting bridges, culverts, catch basins, drop inlets, retaining walls, cribbing, manholes, endwalls, buildings, sewers, service pipes, underdrains, foundation drains, and other features which may be encountered in the work and not otherwise classed herein.

SUB-BASE :

The layer or layers of specified material and thickness placed on a subgrade to support a base course.

SUB-CONTRACTOR :

An individual, partnership, company, corporation or joint venture who performs one or more parts of a contract for the principal Contractor according to a separate agreement with the principal Contractor.

SUB-GRADE :

The top surface of a roadbed upon which the pavement structure and shoulders are constructed.

SUBSTANTIAL CONFORMITY

Substantial conformity means compliance with reasonable and customary manufacturing and construction tolerances where working tolerances are not specified. Where working tolerances are specified, substantial conformity means compliance with such working tolerances.

Without detracting from his complete and absolute discretion, the Engineer may accept variations beyond such tolerances as substantial conformity where they will not materially affect

the value or utility of the work and the interests of HA.

SUB-STRUCTURE :

That portion of the structure found below the bearings of simple and continuous spans, skewbacks of arches and tops of footings of rigid frames, together with the backwalls, wingwalls and wing protection railings.

SUPERINTENDENT :

The Contractor's authorized representative in responsible charge of the work.

SUPERSTRUCTURE :

The entire structure above the sub-structure.

SUPPLEMENTAL AGREEMENT :

A written agreement executed by the Contractor and HA, with the consent of the Surety, which is a supplement to the original contract.

SUPPLEMENTAL SPECIFICATIONS :

Additions and revisions to these Standard Specifications that are adopted subsequent to issuance of the printed book.

SURETY :

The underwriter who gives a monetary guarantee on behalf of the Contractor, and assumes liability jointly with the Contractor for his contractual obligations.

SURFACE COURSE :

The top layer of a pavement structure, designed to accommodate the traffic load and to resist traffic abrasion and the effects of climate.

TOP SOIL :

Surface soil which is suitable for support of normal plant growth.

TRAVELED WAY :

The portion of the roadway which is intended for the movement of vehicles, exclusive of shoulders and auxiliary lanes.

WORK :

Work means the furnishing of all labor, materials, equipment, and other incidentals necessary to the successful completion of the project, and the carrying out of all the duties and obligations imposed by the contract.

WORKING DRAWINGS :

Stress sheets, shop drawings, erections plans, false work plans, framework plans, cofferdam plans, bending diagrams for reinforcing steel, or other supplementary plans or similar data which the Contractor is required to submit to the Engineer for approval.

UNIT PRICE PAYMENT

A basis of Payment whereby the Contractor is paid unit prices for unit items of work, the total compensation for the work being the product of the unit price and the actual quantity of work perfomed.

SECTION 102
CONTRACT TYPE AND CONTRACTING PROCEDURE

102.01 CONTRACT TYPE

Contracts for HA project works may be established under one of the following types:

Unit Price Contract
Lump Sum Contract
Cost Plus Contract

Unless otherwise specifically stipulated on an individual contract basis, all contracts for HA works will be of the Unit Price type. These Specifications, and in particular the General Provisions contained herein, are applicable only to this type of contract.

Lump Sum and Cost Plus are considered to be "non-standard" contract types. If either of these types is to be used for any HA project, the particular terms and conditions will be stipulated in Special Provisions and/or Supplemental Specifications as may be required. These will be contained in the concerned Proposal.

102.02 CONTRACTING PROCEDURE

HA project works may be contracted under one of the following procedures according to HA financial and accounting regulations or by authorization of the Chairman of the HA Administrative Council in special cases:

Open Bid
Restricted Bid
Mutual Agreement

(1) APPLICATION OF OPEN BID

The Open Bid procedure is applied for regular works which do not require any special technical capabilities and which

can be advertised with full competition between Prequalified and Registered Contractors in accordance with these Specifications and any necessary Supplemental Specifications and Special Provisions contained in the Proposal, with no inconvenience to the interest of HA.

These Specifications, necessary Special Provisions, and the Plans prescribe the bidding conditions, characteristics of the work, and conditions for performance of the work. The Invitation For Bids will prescribe what categories of Contractors on the list will be authorized to participate in the bid. Selection of apparent winners is based only on the prices quoted by responsive Bidders.

When an Open Bid fails twice, HA has the option to enter into a Mutual Agreement according to (3) following.

(2) APPLICATION OF RESTRICTED BID

Restricted Bid is applied for projects which, due to their special character, would cause great inconvenience to the interest or HA if contracted under the procedure for Open Bid.

Invitations for Restricted Bid are extended to those Contractors selected by HA from the Contractor list whose special technical and financial capabilities have been recognized.

Selection of apparent winners is based only on the prices quoted by responsive selected Bidders.

A Restricted Bid is only valid when there are at least three (3) selected Contractors. The bidding is still valid when only one Contractor submits a Proposal, although the number of selected Bidders is three (3) or more.

When a Restricted Bid fails twice, HA has the option to enter into a Mutual Agreement according to (3), following.

Procedures for opening bids and other specifications prescribed for Open Bid are applicable to Restricted Bid.

(3) APPLICATION OF MUTUAL AGREEMENT

Mutual Agreement is a form of contract entered into by HA by negotiation with one or more selected Contractors, rather than by competitive bidding.

The procedures for contracting by Mutual Agreement shall be those of the National Budget.

Only the following contracts will be negotiated under the form of Mutual Agreement between HA and the selected Contractor :

(a) Projects pertaining to study, supply or services requiring special technical capability.

(b) Objects or materials covered by a patent or being under the exclusive sale of a licensed agent.

(c) Projects, exploration or supply intended for experimentation or study.

(d) Objects, raw materials or materials to be bought and selected from their source due to their special character and utility.

(e) Projects, supply or transportation that have been exposed to competitive bidding without result.

(f) Projects, supply or transportation that HA must complete because of the Contractor's default.

(g) Transportation by sea, by road or by air entrusted to transporting Contractors or companies belonging to the Government or subsidized by the Government.

(h) Projects or supply which cannot be completed according to deadlines prescribed for competitive bids, due to emergency situations.

(i) Projects, suppl/ or service which must be kept secret. In this case, an approval by the Chairman of the 'HA Administrative Council is required.

(j) Projects, supply or service which must be performed on a cost plus fixed fee basis.

(k) Projects, supply or service, the amount of which is within the limit specified in HA financial and accounting regulations.

Unless otherwise stipulated on an individual contract basis, all contracts for 'HA project works will be established under the procedure of Open Bid. These Specifications, and in particular the General Provisions contained herein are specifically applicable to this bidding procedure.

If the procedures for Restricted Bid or Mutual Agreement are at any time to be utilized for particular projects, this will be so directed in the Invitation For Bids. In such case the particular procedure and conditions for bidding will be stipulated in Special Provisions as may be required. These will be contained in the concerned proposal.

In no case will the procedures for Restricted Bid or Mutual Agreement be used in combination with that for Open Bid in the same Bidding. Utilization of the procedure for Restricted Bid or Mutual Agreement will require independent establishment of the concerned contract according to the appropriate provisions and regulations.

SECTION 103
BIDDING REQUIREMENTS AND CONDITIONS

103.01 PREQUALIFICATION AND REGISTRATION OF BIDDERS

The execution of a contract on HA work will be entrusted only to a Bidder whose name is in the HA List of Prequalified and Registered Contractors. This list will be established by the Prequalification and Registration Committee of HA and will remain in full force and effect at all times.

Before his Proposal may be accepted in any Bidding, said Bidder's Application must be accepted and approved by the HA Prequalification and Registration Committee, and his eligibility for bidding must be duly registered by the Committee with assignment to him of a HA Contractor Rating.

The Contractor Rating will authorize the Bidder to submit proposals for individual projects requiring a particular type of work within a maximum monetary amount.

Bidders intending to consistently submit proposals shall apply for prequalification and registration, with subsequent evaluation of Contractor Rating, at successive intervals not exceeding one (1) year. A Contractor's Rating may be changed at the sole discretion of the Committee at any time during such one year period upon evidence of exemplary or unsatisfactory performance of work by the Contractor.

103.02 INVITATION FOR BIDS

The Invitation For Bids will be posted at least twenty (20) days before the bidding date and made known to the interested bidders by information bulletin to all Contractors in the HA List of Prequalified and Registered Bidders.

This Invitation will show :

— Objective of the project

— Place for consultation of bidding dossiers

— Bidding date, time and place

— The prices to be paid for Proposal Forms, Specifications and Plans

After publication of this advertisement, if there should be any change in the Plans, Specifications or Special Provisions, HA will extend a new Invitation according to the same procedures as stated above.

In emergency cases, or in the case of a second Invitation for the same bidding, the invitation time may be reduced to ten (10) days. (Emergency bid advertisement).

103.03 CONTENTS OF PROPOSAL FORM

Any Prequalified and Registered Bidder who desires to participate in bidding must submit to HA in accordance with the deadline specified in the Invitation For Bids, a request for Proposal on the prescribed form entitled "Request for Plans and Proposal Form". Upon receipt of such request, HA will furnish the Bidder with a Proposal form. This form will state the location and description of the contemplated construction and will show the estimated quantities of the various kinds of work or materials to be furnished, and will contain a schedule of the work or material items for which unit bid prices are invited. The Proposal form will state, along with other information and instructions the time in which the work is to be completed, the amount of the Proposal Guaranty, the amount of the Performance Guaranty and the date, time, and place of opening proposals. The form will also include any

Special Provisions or requirements which vary from or are not contained in these Standard Specifications.

All papers bound with or attached to the Proposal form are to be considered as a part thereof and must not be detached or altered when the Proposal is submitted.

The Plans, these Standard Specifications and other documents so designated in the Proposal Form are to be considered a part of the Proposal whether attached or not.

103.04 ISSUANCE OF PROPOSAL FORM

HA reserves the right to refuse to issue a Proposal Form if a Bidder is in default for any of the following reasons :

(1) Failure of the Bidder to be in possession of a valid HA Contractor Rating.

(2) Failure of the Bidder to comply with any of the Rules and Regulations Pertaining to Prequalification and Registration of Prospective Bidders and Contractors.

(3) Unsatisfactory work or unsatisfactory progress on HA works under contract to the same Bidder at the time of bidding.

(4) Uncompleted work under contract to the same Bidder at the time of bidding, which in the opinion of HA might hinder the progress of additional work if awarded.

(5) Default of a previous contract.

(6) Conclusive evidence of fraudulent practices concerning previous HA contracts with the same Bidder.

The Bidder will be required to pay to HA the amount stated in the Invitation For Bids for each copy of the Proposal Form, each copy of the Standard Specifications and Special Provisions, and each set of Plans.

103.05 PREPARATION OF PROPOSAL

The Bidder's Proposal must be prepared on the form provided by HA in three (3) copies, with fiscal stamps fixed on the original.

If the Proposals are submitted without or short of fiscal stamps, these are still valid; but HA will send these to the Registry Office for penalty due to violation of fiscal stamp laws.

The blank spaces in the Proposal Form must be filled in correctly for each and every item for which a quantity is given. In the price list the Bidder must state the unit price in figures and in words for which he proposes to perform each listed item of work. The total price for each item must be shown in figures as the product of the quantity and the unit prices. The total of all the item prices must be shown both in words and in figures as the bid price for the contract.

All prices, extensions and tabulations must correspond to each other. If there is any difference, indications of unit prices shown in words on the price list will be considered as correct and other indications, including errors in calculation, will be corrected in order to establish the real value of the bid proposal. Under no circumstances will the proposed unit prices be changed or altered by HA nor will unit price changes be permitted by the Bidder after submission of the Proposal.

All entries on Proposal forms must be made with ink or typewriter.

The Bidder must sign his proposal correctly, with ink, showing his name and post office address.

The Proposal of an individual must be signed by the Contractor himself.

The Proposal of a partnership must be signed by its authorized signatory.

The Proposal of a company or joint venture must be signed by the person having power of attorney as signatory for the Bidder and the names and addresses of the members or officers of the company or joint venture must be given.

103.06 INTERPRETATION OF PROPOSAL QUANTITIES

The Bidder's attention is called to the fact that the estimate of quantities of work to be done and materials to be furnished under these Specifications, as shown in the Proposal form, is approximate and is given only as a basis of calculation upon which the award of the contract is to be made. HA does not assume any responsibility that the final quantities will remain in strict accordance with estimated quantities nor shall the Contractor plead misunderstanding or deception because of such estimate of quantities or of the character, location or other conditions pertaining thereto.

Actual quantities will be paid for at the contract unit price or prices.

The right is reserved for the Engineer to increase, decrease, or omit any of the Proposal quantities during prosecution of the work as may be required to fulfill the intent of the contract, as provided in Sections 105.02 and 110.05.

103.07 EXAMINATION OF PLANS, SPECIFICATIONS, SPECIAL PROVISIONS AND SITE OF WORK.

The Bidder is required to examine carefully the site of the work, the Plans, Specifications, Special Provisions and contract form pertaining to the work contemplated.

The submission of a Proposal shall be conclusive evidence that he has judged for and satisfied himself as to the conditions to be encountered, the character, quality and quantities of work to be performed and materials to be furnished, and the requirements of these Specifications and the contract.

103.08 IRREGULAR PROPOSALS

Proposals may be considered irregular and may be rejected for the following reasons :

(1) If the Proposal is on a form other than that provided by HA ; or if the form is altered or any part is detached.

(2) If the Proposal is not signed by the Bidder.

(3) If there are unauthorized additions, conditional or alternate bids, or irregularities of any kind which may tend to make the proposal incomplete, indefinite or ambiguous as to its meaning.

(4) If the Proposals for two more projects, advertised separately, are connected, or made contingent one upon the other, in such manner that the Proposal for any particular project shall carry a provisional deduction in the bid price on one or more of the other projects.

(5) If the unit prices contained in the Proposal are obviously unbalanced, either above or below the reasonable cost analysis value.

(6) If the Bidder adds any provisions reserving the right to accept or reject the award of a contract.

(7) If the Proposal fails to contain a unit price for every pay item indicated in the price list.

(8) If the Proposal is not accompanied by all required enclosures.

103.09 PROPOSAL GUARANTY

No Proposal will be accepted unless it is accompanied by a Proposal Guaranty in the amount stipulated in the Proposal made unconditionally payable to HA, which may be :

(1) A bank or Treasury certified check valid until four (4) days after the bid opening date.

(2) Any other guaranty that may be especially approved by HA.

103.10 DELIVERY OF PROPOSALS

Each Proposal should be submitted in a wax-sealed special envelope provided by HA. The blank spaces on the envelope shall be filled in correctly to clearly indicate its contents. When an envelope other than the special one furnished by HA is used, it shall be of the same general size and shape and be identically marked to clearly indicate its contents. If submitted by mail, the above-mentioned envelope must be enclosed in a second wax-sealed envelope, addressed to the Chairman of the HA Bidding Committee at the concerned location. This should be sent by registered mail.

Proposals will be received until the date and hour set for the opening of bids and must be in the hands of the Bidding Committee by that time. The responsibility for delivery of the Proposals shall be entirely with the Bidder. All Proposals received after the time for opening of bids will not be accepted and will be returned to the Bidder unopened.

No responsibility will be attached to HA for the premature opening of a bid not properly addressed and identified. Telegraphic bids will not be considered.

The Proposal will be placed in the envelope with the following enclosures :

- A Proposal Guaranty in accordance with the Provisions of Section 103.09.
- A certificate showing Bidder's membership in the Workman Compensation Fund (issuing date not more than one (1) month before the bid opening date).
- Any other enclosures as stated in the Proposal.

103.11 WITHDRAWAL OR REVISION OF PROPOSALS

A Bidder may withdraw or revise a Proposal after it has been deposited with HA, provided the request for such withdrawal or revision is received by HA in writing forty-eight (48) hours before the time set for opening Proposals. After this 48 hour deadline, no Proposal may be re-examined, altered, withdrawn.

103.12 PUBLIC OPENING OF PROPOSALS

All HA Biddings will be conducted by a Bidding Committee composed of a Chairman and two (2) or more members.

The Bidding is valid if the Committee Chairman and at least two (2) members, and at least one (1) Bidder, are present.

Proposals will be opened and read publicly at the time and on the date set forth in the Invitation For Bids, by the Bidding Committee. Bidders, their authorized agents, and other interested parties are invited to be present.

In certain instances budgetary restrictions may require that HA fix maximum prices for the award of a contract. HA may also in some cases fix minimum prices as a protection to the Bidder against unusual conditions or gross errors in calculation.

If maximum and/or minimum prices are fixed for award of a contract, these prices will be contained in a wax-sealed envelope on the Chairman's desk at the bid-opening time. This will be opened after Proposals have been opened and classified.

Bids quoted above the previously fixed maximum or below the previously fixed minimum may be rejected. Previously fixed maximum and minimum prices will be kept confidential by the Chairman.

After the bid opening, the Bidding Committee will have seven (7) days for checking all Proposals. If, during checking

of Proposals, it is discovered that errors were made and consequently a Bidder other than the one who was designated in the public meeting is declared as apparent winner, the Chairman will notify both Bidders before expiration of this deadline.

The process and results of the bidding, unexpected events, and complaints of any kind will be recorded in an official statement signed by the Chairman and all Committee members.

Bidding results are only valid when approved by the competent authorities of HA.

103.13 DISQUALIFICATION OF BIDDERS

Either of the following reasons may be considered as being sufficient for the disqualification of a Bidder and the rejection of his Proposal or Proposals :

(1) More than one Proposal for the same work from an individual, firm, corporation, partnership or joint venture under the same or different names.

(2) Evidence of collusion among Bidders. Participants in collusion will receive no recognition as Bidders either singly or in joint venture, for future work of HA until each participant has been reinstated as a qualified Bidder.

103.14 MATERIAL GUARANTY

The successful Bidder may be required to furnish a complete statement of the origin, composition and manufacture of all materials not furnished by HA and to be used in the construction of work together with samples which may be subjected to the tests provided for in these Specifications to determine their quality and fitness for the work.

SECTION 104
AWARD AND EXECUTION OF CONTRACT

104.01 CONSIDERATION OF PROPOSALS

After the Proposals are opened and read, they will be compared on the basis of the summation, written in words, of the products of the quantities shown in the bid schedule and the unit bid prices. (Total contract amount). The results of such comparisons will be immediately announced to the public. In the event of discrepancy between unit bid prices and subsequent extension or summation, the unit bid prices shall govern.

The Bidder offering the lowest total contract amount will be declared as the temporary, or apparent winner. If two or more Bidders offer the same total contract amount, the apparent winner will be declared on the basis of the lowest unit prices offered for the major items of work.

No contract will be awarded until after a detailed scrutiny of the Proposals has been made and it has been ascertained that award of a contract on the basis of the Proposals received is in the best interest of HA.

No Bidder will have the right to any claim, except for the return of his Proposal Guaranty, in event of his failure to obtain a contract for any reason.

HA reserves the right to reject any or all proposals, to waive technicalities or to advertise for new proposals, if in the judgement of HA, the best interest of HA will be thereby promoted.

104.02 AWARD OF CONTRACT

The award of contract, if awarded, will be made within sixty (60) calendar days after the opening of Proposals, to the successful Bidder.

The successful Bidder will be notified by offtcial order at the address shown on his proposal, that his proposal has been approved and that he has been awarded the contract.

If this notification can not be made, the official order will be posted at the headquarters of the Province where the work is located, and will be considered as sufficient notice.

If award of a contract is not made within sixty (60) calendar days, the Bidder will have the right to withdraw his proposal. However, after this deadline, if the Contractor does not use his above-mentioned right, the approved contract will still be forwarded to him and he will have a seven-(7) day period after receiving notice of award of contract to withdraw his proposal. After this seven-(7) day deadline, if the Bidder does not advise HA in writing of withdrawal of his proposal, said contract will be considered as executed.

104.03 CANCELLATION OF AWARD

HA reserves the right to cancel the award of a contract at any time prior to the execution of said contract by all parties, without liability against the HA.

104.04 RETURN OF PROPOSAL GUARANTY

All Proposal Guaranties, except those of the three lowest Bidders, will be returned immediately following the opening and checking of the Proposals. The retained proposal guaranty of the unsuccessful of the three lowest Bidders will be returned within seven (7) days following the bid opening and that of the successful Bidder will be returnad after a Performance Guaranty has been furnished and the contract has been executed.

104.05 APPROVAL AND EXECUTION OF CONTRACT

The successful Bidder wili be considered as having entered into a contract with HA when his proposal for the work is

approved. A Proposal will not be considered as binding upon HA until it has been approved and the Performance Guaranty deposited as detailed in Section 104.06, following. Approval of the proposal and deposit of the Performance Guaranty will constitute execution of the contract.

The original copy of the approved contract and its enclosures will be given to the Contractor via the official order informing him that his contract was approved.

If the contract is to be mortgaged, a special copy of the contract will be issued by HA for this purpose.

Unless otherwise prescribed in Special Provisions, within twenty (20) days after receipt of his approved contract, and after having it registered, the Contractor must deliver to HA twenty (20) copies of his contract and its enclosures. If the Contractor delivers typed copies, the original copy will be taken as proof. The Contractor is entirely responsible for all mistakes and/or omissions in these copies, if any.

The Contractor must pay for fiscal stamps and fees for registration of the contract and its enclosures and attachments, according to current regulations.

The Contractor will not be permitted, except under special emergency circumstances, to begin work, nor will payment be made for materials delivered, prior to approval of the contract.

104.06 CONTRACT PERFORMANCE GUARANTY

The Contractor shall deposit with HA a permanent bond to guaranty his performance of the work in accordance with the provisions of the contract and these Specifications.

This Performance Guaranty must be deposited within twenty (20) days after the date of notification of award of

contract. The guaranty must be in the amount stipulated in the proposal, and may be in the form of a certified check made unconditionally payable to HA, or bank warranty or surety bond. If a bank warranty or surety bond is deposited for Performance Guaranty, such warranty or bond must be in a form approved by HA and shall be executed by a bank or surety company authorized by law to transact such business.

If deposit of the Performance Guaranty is not made within the above twenty (20) day deadline, the Contractor will be considered as having failed to accept the approved contract.

The Performance Guaranty will be returned to the Contractor after satisfactory completion and final acceptance of the work.

104.07 FORFEITURE OF PROPOSAL GUARANTY

Failure by the Contractor to accept the approved contract in accordance with Section 104.02 shall be just cause for annulment of the award. In the event of such annulment, the Contractor's Proposal Guaranty shall be forfeited to HA, not as a penalty, but as liquidated damages against costs incurred by HA. Award may then be made to the next lowest responsive Bidder, or the work may be readvertised, or otherwise, as HA may decide.

SECTION 105 SCOPE OF WORK

105.01 INTENT OF CONTRACT

The intent of the contract is to provide for the construction and completion of the project in every detail as described in the Plans, in these Specifications, the Special Provisions, the Proposal, and the contract. The Contractor shall provide all labor, materials, equipment, tools, transport, supplies and incidentals required to complete the work as described, in accordance with the terms of the contract. It shall be understood that the work to be performed under the contract may extend beyond the boundaries of the right-of-way. The Contractor shall agree to perform such work at the contract unit prices. The Contractor shall further agree that all responsibility and liability assumed by him under the terms of the contract shall extend to such work. HA may obtain the necessary permission to enter on and use private property when such entry is necessary for performance of the work.

105.02 ALTERATION OF PLANS OR CHARACTER OF WORK

(1) GENERAL

The Contractor may not change the project in any detail at his will, or for any cause other than a direct order in writing from the Engineer.

HA reserves the right to make, at any time during progress of the work, such increases or decreases in quantities and such alterations of plans and design detail within the general scope of the contract, including alterations in the elevation, gradient, and alignment of the road or structure, as may be found necessary or desirable to maintain the structural integrity of the work, regulate the cost of the work, or preserve the public interest, or all.

Such increases, decreases, alterations or changes will be in writing in the form of approved Change Order and Supplemental Agreement as described in the following paragraphs, and will not invalidate the contract or release the surety. The Contractor shall agree to perform the work as altered the same as if it had been a part of the original contract.

Alteration of the plans or of the nature of the work will not, under any circumstances involve work beyond the terminal ends of the proposed construction, except as may be necessary to a minor extent for satisfactory completion of the work.

(2) INCREASED OR DECREASED QUANTITIES

(a) CHANGE ORDER

A change in the quantity of any item of work in the contract will be authorized by issuance to the Contractor of an approved Change Order by the Engineer. The Change Order will show, in detail, the increased or decreased quantity of work to be performed, or of materials to be furnished, and the amount to be added to or deducted from the contract amount for the increased or decreased item.

For any major item of work as defined in Section 101, and for any minor item so defined when its quantity is increased by more than 25% from the contract quantity, the Contractor shall not perform any increased quantity or deliver any increased quantity of material until he has received the duly approved Change Order.

For any minor item of work when the quantity is increased by 25% or less from the contract quantity,

the authorizing Change Order may be received subsequent to performance of the work.

Work involving decreased quantities will be performed without delay, and the authorizing Change Order will be issued to the Contractor subsequent to performance of the work.

For those items of work or material whose actual quantity can not be determined until final measurement is made of the completed work, increased or decreased quantities will be authorized in a Final Change Order, to be issued to the Contractor with the Final Payment Estimate.

If the quantity of any item of work in the contract is increased or decreased by 25% or less from the contract quantity, the Contractor shall complete the work at the contract unit price for that item. Such changes will be authorized by issuance of the authorizing Change Order, only.

The Contractor shall signify his understanding and acceptance of a Change Order by the signature of himself or his authorized representative. If the Contractor refuses for any reason to accept a Change Order issued in accordance with the foregoing, he will be considered to be in default of his contract.

(b) SUPPLEMENTAL AGREEMENT

Major items of work as defined in Section 101, except foundation excavation and bearing piles shall be eligible for negotiated adjustment of their unit prices if the quantities of any such items are increased or decreased by more than 25% from the contract quantity, provided that the project is prosecuted to completion.

Bearing piles and minor items of work shall not be eligible for unit price adjustment in any case, regardless of increase or decrease in quantity.

If a quantity is increased as stated above, only that portion in excess of 125% of the contract quantity shall be eligible for unit price adjustment. If a quantity is decreased as stated above, the revised quantity after reduction shall be eligible for such adjustment.

Any adjustment of unit prices as specified above shall be limited as follows :

> When the quantity of any item is increased or decreased by more than 25%, a negotiated increase of the unit price shall not exceed 15% of the contract unit price ; a negotiated decrease of the unit price shall have no limit.

In addition to his acceptance of the Change Order as detailed in (a), preceding, the Contractor shall signify his understanding and acceptance of the adjusted unit prices through execution of a Supplemental Agreement to the original contract.

Adjustment of prices as provided herein shall be for the benefit of either party to the contract, whichever is adversely affected by the change of quantities.

The above provisions for adjustment of unit prices will not apply in the case of changes caused by suspension of the work or annulment of the contract.

If the Contractor refuses to accept the provisions of these Specifications for unit price adjustment he will be considered to be in default of his contract. No claim for adjustment under these provisions shall be allowed if presented after final payment.

In emergency situations, or when for any valid reason agreement can not reached on adjustment of unit prices, HA has the right to order that the Contractor be compensated for increased quantities of work on a Cost-Plus basis in accordance with the provisions of Section 110.04.

(3) EXTRA WORK

The Contractor may be required to perform Extra Work, as defined in Section 101, in emergency situations or whenever this is necessary to fully complete the project in compliance with the intent of the contract. Such work shall be performed in accordance with the contract, the plans, these Specifications, and as directed by written order of the Engineer.

The written order of the Engineer shall be contained in a Change Order in which the purpose, nature, and quantity of the Extra Work is described. The Contractor shall signify his understanding and acceptance of the Change Order for Extra Work by the signature of himself or his authorized representative.

Payment for Extra Work will be made as provided in Section 110.04 of these Specifications, either on the basis of negotiated unit prices and Supplemental Agreement, or on a Cost-Plus basis at the discretion of HA.

Extra Work may be required and performed as described herein, or that portion of the work involving Extra Work may be deleted from the contract if HA determines such action to be in the public interest.

105.03 MAINTENANCE OF THE WORK

(1) GENERAL

The Contractor shall maintain the constructed or installed portions of the work at all times until the project is accepted by HA. This maintenance means the performance of continuous and effective work day by day, with sufficient equipment and labor to keep the roadway and structures in satisfactory condition.

Maintenance of the work includes, but is not limited to :

Keeping in satisfactory and useable condition the travelled way through the project.

Smoothing and reshaping the subgrade, side slopes, ditches, and base or pavement courses whenever and wherever necessary.

Cleaning debris from drainage channels, bridges, culverts, and inlets.

Removing debris left from construction activities.

Repair or replacement of damaged parts of the work or installations.

Maintaining detours and irrigation water supplies.

Special Maintenance.

Providing access to residences, businesses, and other roads, and keeping existing access paths open.

Maintaining and preserving the new condition of the constructed roadway and structures.

Disposing of all excess or removed matter.

In the case of a contract providing for placement of an additional base or paving course upon a previously constructed or existing pavement, base, or subgrade,

the Contractor shall maintain in satisfactory condition such underlying surface throughout the limits of the project during all construction operations.

The cost for maintenance of the work, with the exception of Special Maintenance and Traffic Control, shall be included in the various contract items, unless otherwise provided. The Contractor will not be paid an additional amount for such work.

The Contractor will be considered as relieved from any further responsibility for maintenance of the work upon final acceptance by 'HA of all or any portion of the work.

(2) SPECIAL MAINTENANCE

The Engineer may direct that Special Maintenance be performed for the benefit of the public, or to effect repair of extensive damage resulting from causes which are beyond the Contractor's control. Payment for special maintenance will be at the contract unit prices for the various items of work, or as Extra Work, all in accordance with Section 105.02 or 110.04 of these Specifications.

(3) MAINTENANCE OF TRAFFIC AND DETOURS

(a) MAINTENANCE OF TRAFFIC

Within any portion of the project through which there is an established travelled way, such travelled way shall at all times be kept open to traffic. Within the limits of the right-of-way, suitable temporary roadways shall be provided and maintained by the Contractor around structure sites and other features of the work through which traffic can not pass. "Suitable" is defined as adequate for the passage of any vehicle normally using the travelled way.

The cost for such maintenance of traffic shall be included in the contract unit prices for the various items of work, except when Special Maintenance is ordered by the Engineer, or when the contract contains an item for "Special Detours".

(b) SPECIAL DETOURS

When the contract contains an item for "Special Detours" payment for such item will be considered to cover all costs for constructing, maintaining and removing such detours, including the construction and removal of incidental drainage structures and their accessory features.

Right-of-way for Special Detours will be obtained by HA. All or any portion of an existing structure that is suitable for use may be utilized in the detour. Any modification of an existing structure, or construction of a temporary structure will require the approval of the Engineer before proceeding with the work.

When the contract contains an item for Temporary Bridge, such bridge and its approaches shall conform with, and will be paid for under the provisions of Section 527 of these Specifications.

(c) MAINTENANCE OF TRAFFIC DURING TEMPORARY SUSPENSION OF WORK

Before any temporary suspension of work, the Contractor shall make passable, and open to traffic, those uncompleted portions of the work, connections, and temporary roadways as may be directed by the Engineer. During such temporary suspension, the Contractor shall maintain the travelled way through the project at no cost to HA, except when the contract contains an item for "Special Detours", or "Temporary Bridge".

(4) PROVISIONS FOR TRAFFIC CONTROL

(a) GENERAL

The Contractor shall take all necessary precautions for the protection of the work and the safety of the public with respect to the movement of traffic within the project limits. Where existing roadways must be closed to traffic, the public safety shall be protected by effective traffic control devices.

No highway or section of highway or bridge shall be closed to traffic except with the written permission of the Engineer. No construction operations shall be started that will for any reason render the roadway generally unsuitable for use of the traveling public, until adequate provision, satisfactory to the Engineer, has been made to detour or bypass traffic in safety and comfort.

The Contractor shall furnish, erect, maintain, and upon completion of their function remove, all barricades, signs, signals and other traffic control devices which are required to warn and direct the traveling public through or around construction operations.

Unless otherwise provided in the Plans, all warning signs shall be erected beyond the limits of the project, at least one hundred and fifty (150) meters (500 ft.) beyond each end of the project and at least one hundred and fifty (150) meters (500 ft.) in advance of any place on the project where operations interfere with the use of the road by traffic, including all intermediate points where the new work crosses or coincides with the existing road.

Lights, lanterns or other lighting devices shall be operated between sunset and sunrise whenever

necessary. Flashing signals may be required as the situation demands.

Flagmen and watchmen must be employed at every location where this is necessary to protect the safety of the public. The wearing apparel (uniform or jacket) and hand-held signs used by flagmen and watchmen shall be such as can be plainly seen by motor vehicle drivers.

All maintenance of traffic control devices will be the responsibility of the Contractor, and will include removal of dirt or other foreign matter from sign faces as well as immediate repair or replacement of any such devices which become damaged.

All traffic control devices will at all times remain the property of the Contractor, except those for special purposes which may on occasion be furnished by HA under Special Provisions to the contract.

(b) METHOD OF MEASUREMENT

The method of measurement for Traffic Control shall be on a lump sum basis when this item of work is included in the Proposal.

When the item of Traffic Control is not included in the Proposal, provisions for traffic control shall not be measured separately, but shall be considered as included in the other items of work in the contract.

(c) BASIS OF PAYMENT

The basis of payment for Traffic Control shall be a lump sum contract price when this item of work is included in the Proposal.

When this item is not included in the Proposal,

no separate payment will be made for provisions for traffic control, but will be considered as included in the contract unit prices for the various items of work in the contract. This basis of payment for traffic control shall be considered as full compensation for furnishing, erecting, maintaining, and removing the devices so ordered, and for the services of flagmen and watchmen as ordered by the Engineer.

(5) MAINTENANCE OF IRRIGATION WATER

Whenever, during the course of construction, it becomes necessary that water be made available for the irrigation of crops, the various project drainage features related to or affected by the irrigation shall be made to maintain a sufficient flow of irrigation water.

The Contractor may not divert or reduce the flow of irrigation water at any location without first consulting the water master or owner of the ditch and obtaining written permission for the period during which the water is diverted or reduced.

No payment will be made for maintenance of irrigation water. Any costs related thereto will be considered as included in the contract unit prices for the various items of work.

105.04 RIGHTS IN AND USE OF MATERIALS FOUND IN THE WORK

The Government has the full right to take possession of objects of every kind and nature, found in excavated or destroyed areas within the limits of the project. When fine arts objects or war materials are found within the project limits, the Contractor must immediately notify the Engineer for instructions as to the appropriate action to be taken. When the Contractor's excavating operations reveal remains

of prehistoric people's dwelling sites or artifacts of historical or archaeological significance, or explosive objects, operations in the immediate area shall be temporarily discontinued and the Engineer immediately notified. The Engineer will contact archaeological authorities, or Army to determine the disposition of the discovered objects. Under direction of the Engineer, the Contractor shall excavate the site in such a manner as to preserve the articles encountered for removal and delivery to the custody of the proper authorities. When such excavation is necessary it will be paid for as Extra Work.

When explosive war materials or devices are, or may be, encountered in the work, the provisions of Section 108.09 shall also apply.

Artifacts and objects thus found and recovered are the sole property and possessions of the Government. The taking of such objects by the Contractor or his personnel shall be considered an unlawful act.

The Contractor is responsible for notifying his employees and subcontractors of this Government right of possession.

In the construction of the structures or pavements the Contractor may be allowed to use earth materials found in the project excavations (stone, gravel, sand, etc.) if these meet all of the requirements of the Specifications relating to character and quality for the intended use. Such use will be only with the written authorization of the Engineer.

If such use is authorized by the Engineer, the Contractor will be paid only for the excavation of such material and for the work in which the excavated material is used at the appropriate corresponding contract unit prices. The Contractor shall then replace the excavated material entirely at his own expense with other suitable material for construction of the embankments, backfills, approaches, etc., according to the requirements of

the specifications for such material, and with approval of the Engineer.

The Contractor shall not excavate or remove any material or object from within the project right-of-way which is not within the construction limits, as indicated by the slope and grade lines, without written authorization from the Engineer.

The material to be salvaged from any existing old structure may be used temporarily by the Contractor in erection of a new structure with authorization of the Engineer. Such material may not be cut, changed, modified, or damaged in any way except with the prior written approval of the Engineer.

105.05 FINAL CLEARING OF JOBSITE

According to progress of the work, and before acceptance of the project, the Contractor shall clear the project step by step and restore the job-site back to the original situation, including land, public or private property being occupied for performance of work, removing unused materials, temporary installations, and clearing ditches, drains, or streambeds which have been obstructed during performance of the work.

The Contractor can request a temporary authorization to store excess equipment and material in a cleared area within the project right-of-way until acceptance of the Project. Prior to acceptance of the Project, all equipment, material, and other property of the Contractor must be removed from such areas.

All piles which are no longer necessary to the project must be cut off at least 0.60m (2ft.) below the ground surface, or even with the channel bottom if located in a waterway. All pile cutoffs and remnants are to be removed from the Project right-of-way.

If the Contractor fails to comply with any of the provisions of this Section, the Engineer will give written notice of such failure to comply. Thirty days after issuance of this notice, HA will cause the removal of any equipment, materials, or other items belonging to the Contractor which remain within the project limits. This removal will be at the Contractor's expense and he shall be responsible for any consequence of such removal. This action shall not bar HA from taking other actions or applying other sanctions against the Contractor as may be provided in Special Provisions.

SECTION 106 CONTROL OF WORK

106.01 AUTHORITY OF THE ENGINEER

The Engineer has the authority to decide all questions which may arise regarding, but not limited to:

Quality and acceptability of materials

Quality and acceptability of work performed

Methods of performance of work

Rate of progress of the work

Mutual rights between Contractors

Interpretation of Plans, Specifications, and contract requirements

Measurement of quantities for the calculation of payment to the Contractor

Other powers as described in these Specifications

Advising and informing the Contractor as to performance of the work in conformance with contract requirements, schedules for progress of the work, official orders and decisions pertinent to the foregoing.

The Engineer has the further authority to suspend the work wholly or in part for failure of the Contractor to correct conditions which are unsafe for his workmen or for the public; for failure of the Contractor to abide by provisions of the contract; for failure to abide by orders and instructions of the Engineer or his authorized representative; for conditions of weather or other causes which are unsuitable for prosecution of the work; or for any reason or condition for which suspension is necessary to preserve the public interest.

The Engineer may delegate his authority to his appropriate subordinates, including Inspectors who will be present at

the jobsite and who will be empowered to act as defined in Section 106.12.

106.02 PLANS AND WORKING DRAWINGS

The project plans will show the limits of construction, the horizontal and vertical roadway alignments, side slope gradients, drainage gradients, typical roadway cross-sections, the locations and design of all structures, and a summary of items appearing in the Proposal. Plans for bridges will show the general layout and features, and those details necessary for preparation of working, shop, or fabrication drawings.

All project plans will be furnished by HA to the Contractor and will be a part of the contract.

The plans will be supplemented by working or shop drawings as are necessary to adequately control the work. Such drawings as may be required will be furnished by the Contractor. They shall provide all necessary detailed information for the fabrication and erection of structural steel, for the erection of falsework and scaffolding, for the construction of cofferdams and temporary bridges, and for any other works or details of construction not covered in the project plans and for which drawings are necessary for adequate control of the work. All working or shop drawings must be approved by the Engineer prior to beginning the corresponding work. Such approval shall not relieve the Contractor of his full responsibility for successful completion of work in accordance with the contract. The Contractor shall take full responsibility for any dimensional errors in drawings furnished by him, and for the adequacy and safety of falsework, cofferdams or other temporary work.

The Contractor is required to submit to the Engineer for approval, five (5) copies of each drawing ten (10) days before

beginning work except as otherwise provided by Special Provisions. These will be examined by the Engineer and either approved or returned to Contractor for incorporation of changes required by the Engineer. The Engineer will not approve the drawings until all required changes or modifications are incorporated in the drawings as submitted. Prior to approval of these drawings, any work done or materials ordered for the structure involved shall be at the Contractor's risk.

The cost of preparing and submitting working or shop drawings is considered to be included in the contract unit prices for the various items of work.

106.03 CONFORMITY WITH PLANS AND SPECIFICATIONS

All work performed and all materials furnished shall be in substantial conformity with the alignments, gradients, cross-sections, dimensions and material requirements, including tolerances, shown in the plans or indicated in the Specifications. Substantial conformity is a defined in Section 101 of these Specifications.

In the event the Engineer finds the materials furnished, work performed, or finished products to be not in substantial conformity with the plans and specifications, but adequate to serve the intended design purpose, he will make a determination if the work should be accepted and remain in place. In this event the Engineer will then document by Change Order the basis of acceptance. This Change Order shall provide for an equitable adjustment of the contract price for the items of work involved. In this case, however, the Contractor shall not be entitled to an increase in payment because of larger dimensions or higher cost of materials and work. Such price adjustment will conform to the Engineer's determination based on sound engineering judgement.

In the event the Engineer finds the materials furnished, work

performed, or finished products to be not in substantial conformity with the plans and specifications, and not adequate to serve the intended design purpose, being inferior and not acceptable, he will so notify the Contractor in writing. The concerned materials, work, or products shall then be removed and replaced by the Contractor at his own expense, according to Section 106.14.

106.04 COORDINATION OF PLANS, STANDARD SPECIFICATIONS, SUPPLEMENTAL SPECIFICATIONS, AND SPECIAL PROVISIONS

These Specifications, the Supplemental Specifications, the Plans, Special Provisions, and all supplementary documents are essential parts of the contract, and any requirement occurring in one will apply to all. They are intended to be complementary and to describe and provide for a complete work. In case of discrepancy or contradiction, priorities will be applied as follows:

Special Provisions
Plans
Supplemental Specifications
Standard Specifications

Dimensions calculated according to design will govern over dimensions scaled from drawings.

The Contractor shall not take advantage of any apparent error or omission in the plans or specifications. In the event the Contractor should discover an error or omission, he must immediately notify the Engineer. The Engineer will then make necessary corrections or interpretations and give additional instructions to the Contractor to assure fulfillment of the intent of the design.

106.05 SILENCE OF PLANS AND SPECIFICATIONS

It is understood by all parties to the contract that the apparent silence of the Plans, Specifications or Special Provisions as to any detail, or the apparent omission of a detailed description concerning any point, shall be regarded as meaning that only the best general practice is to prevail and that only material and workmanship of the first quality are to be used. All interpretations of these Specifications shall be made on this basis.

106.06 COOPERATION BY THE CONTRACTOR

The Contractor will be supplied with a minimum of two (2) sets of approved plans and contract documents, including Special Provisions. The Contractor must keep one (1) set of these available at the jobsite at all times.

The Contractor shall give the work the constant attention which is necessary to facilitate progress, and shall cooperate in every way with the Engineer, the Inspectors, and other Contractors.

The Contractor shall cause to be present on the work at all times, as his representative agent, a competent superintendent who is capable of reading and thoroughly understanding the plans and specifications, who is thoroughly experienced in the type of work being performed, and who will receive and act on instructions from the Engineer or his representatives. In all cases the superintendent will be considered as having been delegated every power and responsibility at the jobsite by the Contractor for prosecution of the work. He shall have full authority to execute orders or directions of the Engineer without delay, and to promptly supply such materials, equipment, tools, labor, and other items as may be required to successfully complete the work. Nomination of any superintendent must be approved by the Engineer, if other than the superintendent named in the Contractor's application for prequalification and registration.

106.07 COOPERATION WITH PUBLIC UTILITIES

HA will notify all public utility companies and other parties affected by the work, and will endeavor to have all necessary adjustments of their facilities accomplished with a minimum of inconvenience to the project.

Water lines, electric power lines, service connections, water meter and valve boxes, light standards, cable ways, signals, and all other utility appurtenances within the limits of construction which must be relocated are to be moved by the owners at their expense, unless otherwise provided in the contract.

It is understood and agreed that the Contractor has considered in preparing his proposal all of the pertinent utility appurtenances in both their original and relocated positions as shown in the Plans, and that no additional compensation will be allowed to him for any delays, inconvenience, or damage resulting from their existence or the operation of moving them.

106.08 COOPERATION BETWEEN CONTRACTORS

HA reserves the right to contract for or perform other or additional work on or near the job-site of the work called for in the contract.

When separate contracts are let within the limits of a single project, each Contractor shall conduct his work so as not to interfere with or hinder the progress of other Contractors. Contractors working on the same project shall cooperate together as directed by the Engineer.

Each Contractor involved shall assume all liability, financial or otherwise, in connection with his contract and shall not make any claim of damages against HA because of inconvenience.

delay or loss incurred by him as a result of other Contractors working within the limits of the same project.

Each Contractor shall arrange his work, locate his equipment, store his materials, and dispose of wastes so as to assure minimum interference with the operations of other Contractors. He shall join his work with that of the others in an acceptable manner and perform it in proper sequence to that of the others.

106.09 SECURITY OF THE JOBSITE

The Contractor must know before starting his operations all places intended for his work sites and the means of entrance and exit to such locations. The Contractor must observe all regulations and instructions of the Government, HA, and the responsible local authority where work is taking place, with respect to the safety and security of his jobsites. All procedures put into practice by the Contractor for maintaining order and providing security to his workers are subject to approval of the Engineer.

If the Invitation For Bids and/or Special Provisions state that the work under contract pertains to a national defense purpose, the following requirements shall be in effect :

(1) When necessary in the national interest and to protect the security of the work, the Engineer has the authority to require the Contractor to suspend the work and remove all his personnel from the jobsite. Neither the Government nor HA can assume any responsibility for the consequences of this action.

(2) If the Contractor should discover any action causing damage to the work, he must immediately make this known to the Engineer. Failure to do so can result in prosecution under the law, in cancellation of the contract, or both.

(3) If, after the reporting of such action, the Engineer determines

that special security measures are required, the Contractor must immediately carry out such measures with no grounds for claiming damages or extra payment.

(4) The Contractor is responsible for notifying the provisions of (1), (2) & (3) above to his subcontractors and his supervising personnel at the job-site.

(5) PROTECTION OF SECRECY

(a) When the contract has a secret character, in total or in part, or when work is to be performed at places where special preventive measures must be taken to ensure secrecy or otherwise protect the national interest, the Government, through HA will invite Bidders to its offices to receive instructions pertaining to protection of secrecy in private firms engaged in national defense projects. Every Bidder who is so instructed shall be considered fully informed as to such instructions.

(b) Upon award of the contract or contracts, HA will advise the Contractors of any special preventive measures to be applied.

(c) The Contractor and his subcontractors shall use every lawful means to safeguard and protect classified materials which are entrusted to them, and shall immediately notify the Engineer of every loss or unexpected incident which might occur. All parties concerned shall keep secret all military information known to them during prosecution of the work.

(d) The Contractor shall be responsible for observance of instructions pertaining to control of his personnel and protection of secrecy as directed in instructions for preventive measures. He shall also be responsible for the actions of his subcontractors in this regard.

(e) The Contractor shall not be entitled to extra or increased payment for costs incurred with respect to protection of secrecy. Such costs shall be considered as included in the contract unit prices for the various items of work.

(f) If the Contractor or any subcontractor fails to comply with the provisions for protection of secrecy, the Contractor will be in default of his contract, in which case HA will take appropriate action under the provisions of Section 109.08. The Contractor in this case may also be subject to prosecution under the law.

106.10 CONSTRUCTION STAKES, LINES AND GRADES

The Engineer will set construction stakes establishing alignment, slopes, right-of-way limits, and continuous profile grade for roadwork; centerlines and bench marks for bridges, culverts, and miscellaneous structures as may be necessary; and will provide the Contractor with all necessary information relating to lines, slopes, and grades. These stakes and marks will constitute the field controls in accordance with which the Contractor shall establish other necessary marks and guides, and perform the work.

The Contractor will be held responsible for preserving the stakes and marks. If construction stakes or marks are lost or destroyed by willfull acts of the Contractor or his workers, or through their carelessness or neglect, the cost of replacing them will be deducted from payment to the Contractor.

HA will be responsible for the accuracy of established lines, slopes, grades, control marks, and other field engineering works performed by HA personnel.

The Contractor shall cooperate with HA field engineering personnel, and shall provide without claim for payment all reasonable assistance as may be necessary to facilitate their

work and assure the accuracy and dependability of established marks and guides.

The Contractor shall take no advantage of any apparent error, omission, or delay by HA in performing construction staking or other engineering work. When such apparent error, omission or delay is discovered, all work shall cease on the affected contract items. The Contractor shall notify the Engineer in writing within three (3) days after such discovery of the nature and location of the error, omission, or delay and define the affected contract items. No claim by the Contractor for adjustment or damages will be eligible for consideration should he fail to meet the foregoing three (3) day deadline.

106.11 AUTHORITY AND DUTIES OF THE PROJECT ENGINEER

As the direct representative of the Engineer, the Project Engineer has immediate charge of the engineering details of each construction project. He is responsible for the administration and satisfactory completion of the project. He has the authority to reject defective material, to suspend any work that is being improperly performed, and to cause unacceptable or unauthorized work to be removed.

106.12 AUTHORITY AND DUTIES OF INSPECTORS

Inspectors will be appointed by the Engineer and stationed on the work to :

- Keep the Engineer informed as to the progress of the work and the manner in which it is being done ;
- Report whenever it appears that the materials furnished and the work performed by the Contractor fail to fulfill the requirements of the Specifications and contract ;

- Call to the attention of the Contractor any deviation from, or infringement upon the plans and specifications;
- Perform necessary analytical tests on all work and materials.

Inspectors shall be authorized to inspect all work done and materials furnished, and to exercise such additional authority as may be delegated to them in writing by the Engineer. Such inspection may extend to all or any part of work done and material furnished. They shall have authority to reject defective materials and to suspend any work that is being improperly done, subject to the final decision of the Engineer.

Such inspection shall not relieve the Contractor from any obligation to furnish acceptable materials or to perform all work strictly in accordance with the requirements of the plans, specifications, and contract.

Inspectors shall not be authorized to revoke, alter, enlarge, relax or release any requirements of the specifications, nor to approve or accept any portion of the work, nor to issue instructions contrary to the plans and specifications.

Inspectors shall, in no case, act as foremen, or perform other duties for the Contractor, nor interfere with the Contractor's management of the work. Any advice which Inspectors may give the Contractor shall in no way be construed as binding the Engineer or HA in any manner, or releasing the Contractor from the fulfillment of the terms of the contract.

106.13 INSPECTION OF WORK

All materials and each part of detail of the work shall be subject to inspection by the Engineer. The Engineer will be allowed access to all parts of the work and shall be given such information, facilities, and assistance by the Contractor as may be required to make a complete and detailed inspection.

No work shall be done nor materials used without suitable supervision and inspection by the Engineer or his authorized representative. Work done or materials used without such supervision and inspection may be ordered removed and replaced at the Contractor's expense. Failure to reject any defective work or material shall in no way prevent later rejection when such defect is discovered, or obligate the Engineer to final acceptance.

When another unit of Government or political subdivision or public utility is to pay a portion of the cost of the work included in the contract, its authorized representative shall have the right to inspect the work, but such inspection shall in no sense make the unit of Government or political subdivision or public utility a party to the contract, and shall in no way interfere with the rights of either HA or the Contractor as parties to the contract.

At any time before acceptance of the work the Contractor shall remove or uncover for inspection such portions of the finished work as the Engineer may require. After examination, the Contractor shall restore said portions of the work to meet the requirements of the plans and specifications. Should the work thus exposed and examined prove to be acceptable, the uncovering, removing, replacing, covering, and restoring of the parts removed will be paid for as Extra Work; but, should the work thus exposed and examined prove to be unacceptable, all work associated with the examination will be at the Contractor's expense.

106.14 REMOVAL OF UNACCEPTABLE AND UNAUTHORIZED WORK

All work which does not conform to the requirements of the contract will be considered unacceptable, unless otherwise determined to be acceptable under the provisions of Section 106.03.

Unacceptable work, whether resulting from poor workmanship, defective materials, damage through carelessness, or any other cause, shall be removed and replaced in an acceptable manner before final acceptance of the project.

No work shall be done until the necessary lines and grades have been established by the Engineer. Work done contrary to the instructions of the Engineer, work done beyond the lines shown in the plans, or as given by construction stakes, or any extra work done without authority will be considered as unauthorized and will not be paid for. Unauthorized work may be ordered to be removed or replaced at the Contractor's expense.

The Contractor shall not incur any liability by reason of verbal directions or instructions given by the Engineer or his representative, nor will HA be liable for extra materials or work performed unless the materials or work are required of the Contractor by written order of the Engineer.

If the Contractor fails to comply within ten (10) days after receipt of any order of the Engineer given under the provisions of this Section, the Engineer will have the authority to employ other means for correction, replacement, or removal of unacceptable or unauthorized work. All costs thus incurred will be deducted from payments due or to become due the Contractor.

106.15 LOAD RESTRICTIONS

The Contractor shall comply with all legal load restrictions in the hauling of materials on public roads beyond the limits of the project and on completed portions of the project. The Contractor will be responsible for the repair of any damage to roads or structures resulting from the movement of his vehicles not in compliance with load restrictions. Special permits or authorizations to exceed legal load restrictions will not relieve the Contractor of this responsibility.

The movement of equipment or hauling vehicles of such weight, or so loaded, as to cause damage to the works under contract on the project will not be permitted. Vehicle weights for movement on the subgrade, base course, or finished pavement will be limited as directed by the Engineer. No loads (live loads or added dead loads) will be permitted on any concrete structure, pavement, or base until after expiration of the specified curing period for the concrete.

106.16 FINAL INSPECTION AND ACCEPTANCE OF WORK

The Contractor shall notify the Engineer in writing as to the date of completion of the entire project and request acceptance of the project. The Engineer will arrange for final inspection of the work within fifteen (15) days after receiving the Contractor's written request. If all work is complete, but the final inspection can not be made within the fifteen (15) day time limit due to causes beyond the Contractor's control, no contract working time will be counted from the ending date of this fifteen (15) day period to the date of the final inspection.

If the final inspection shows all the work provided for and contemplated in the contract to be satisfactorily completed and acceptable, the Engineer will notify the Contractor by issuance of a Certificate of Acceptance. Such Certificate will acknowledge that the work has been accepted as of the date of completion of the work, as confirmed by the Engineer.

If the inspection discloses unacceptable or unauthorized work, the Engineer will give the Contractor the necessary instructions for correction, and the Contractor shall immediately comply. The provisions of Section 106.14 will apply in this case. When the Contractor has corrected the noted deficiencies, another inspection will be made. If the work is found to be satisfactorily completed and acceptable, the Engineer will issue a Certificate of Acceptance as of the confirmed date of

completion of the work. Contract working time will continue to accrue against the Contractor in accordance with the provisions of Section 109.06 until all of the work provided for and contemplated in the contract is satisfactorily completed and acceptable.

Upon written application of the Contractor, the Engineer may also issue a Certificate of Acceptance, before completion of whole of the work, for any substantial part of the work which has been occupied and used by HA. When such certificate is issued with respect to a part of the work, that part shall be considered as completed. A Certificate of Acceptance issued for any part of the work shall not certify acceptance of any ground or surfaces which require restoration prior to acceptance of the whole of the work, unless this is stipulated in the certificate.

106.17 CLAIMS FOR ADJUSTMENT

If the Contractor is of the opinion that additional compensation is due him for work or material not clearly covered in the contract, or not previously ordered by the Engineer as Extra Work, the Contractor shall notify the Engineer in writing of his intention to make a claim for such additional compensation before proceeding with the work.

If this notification is not given before prosecution of the corresponding work, and the Contractor does not afford the Engineer every means and opportunity for keeping strict account of the actual costs incurred, then the Contractor hereby agrees to waive any and all claim for such additional compensation. Such notice given by the Contractor, and the keeping of accounts by the Engineer shall not in any way prove or substantiate the Contractor's claim. If the claim is found to be just after due consideration by the Engineer, it will be paid as Extra Work or as provided for Cost-Plus Work.

Nothing foregoing in this Subsection shall be construed as establishing the basis for any claim contrary to the terms and conditions of the Plans, Specifications, Special Provisions, Agreement, or any other part of the contract.

106.18 SETTLEMENT OF DISPUTES

If disputes arise during prosecution of the work, it is expected that every reasonable effort will be made by all parties to the dispute to reach a settlement within the jurisdiction of the District Engineer. When a settlement can not be reached through diligent consultation, the following procedures shall be in effect.

(1) DISPUTE BETWEEN CONTRACTOR AND DISTRICT ENGINEER

Any unsettled dispute between the Contractor and the District Engineer must be reported to the Assistant Director for Operations for settlement.

The District Engineer will prepare an official statement of the dispute. A copy of this statement will be sent to the Contractor who shall respond with a written report of his reasons for the dispute and the amount of any damages claimed. This report must be submitted within five (5) days after receipt of the District Engineer's statement, Sundays and holidays excluded. The District Engineer will send his official statement and the Contractor's report to the Assistant Director for Operations for settlement of the dispute. The Assistant Director for Operations will give his decision for settlement within two (2) months after the date of submittal of the Contractor's report.

Should the Contractor fail to submit his written report to the District Engineer within the five (5) day time limit, the decision of the District Engineer for settlement of the dispute shall stand as final.

(2) DISPUTE BETWEEN CONTRACTOR AND ASSISTANT DIRECTOR FOR OPERATIONS

If the Contractor disputes the decision of the Assistant Director for Operations, in order to protect his disputing rights, he must send to the Assistant Director for Operations a written report of his reasons for continuing the dispute and the amount of damages claimed. This report must be submitted within a period of two (2) months from the date when the decision of the Assistant Director for Operations is made known. The Assistant Director for Operations will send his official statement and the Contractor's report to the competent higher authority for settlement of the dispute.

Should the Contractor fail to submit his written report to the Assistant Director for Operations within the two (2) month time limit, the decision of the Assistant Director for Operations shall stand as final.

(3) DISPUTE BETWEEN CONTRACTOR AND COMPETENT AUTHORITY

If the competent higher authority does not render a decision in the dispute within a period of two (2) months after the date of submittal of the Contractor's report, the Contractor may take recourse to the courts.

If the Contractor does not accept the decision of competent higher authority, he must take his claim to an Administrative Court of relevant jurisdiction within a period of four (4) months from the date of receipt of such decision.

Should the Contractor fail to comply with this four (4) month time limit, the decision of competent higher authority shall stand as final.

(4) DEFINITION OF COMPETENT HIGHER AUTHORITY

Competent higher authority in the context of this Subsection shall be the DirectorGeneral of HA, or the President of the HA Administrative Council, according to current HA administrative policy.

SECTION 107 CONTROL OF MATERIALS

107.01 SOURCE OF SUPPLY AND QUALITY OF MATERIALS

All materials incorporated into the work shall meet all of the requirements of the Plans, and these Specifications, and of any applicable Supplemental Specifications or Special Provisions of the contract. The source of supply of each of the materials shall be approved by the Engineer before delivery is started. An approved source of supply will remain approved only as long as the materials obtained are acceptable. If it is found after trial that sources of supply previously approved do not produce uniform and satisfactory products, or if the product from any source proves unacceptable at any time, the Contractor shall furnish materials from other approved sources.

Approval of materials by the Engineer shall in no way relieve the Contractor of the responsibility for correcting or replacing work found to be unacceptable because of poor workmanship, defective materials, or any other cause.

107.02 INSPECTION, SAMPLING AND TESTING

All materials shall be approved by the Engineer prior to use in the work, and shall be subject to inspection, sampling, testing, and approval or rejection at any time prior to or during incorporation into the work. Any work in which untested materials are used, without approval of the Engineer, shall be performed at the Contractor's risk. Payment will not be made for materials found to be unacceptable or unauthorized. Unacceptable or deficient materials shall be made acceptable, or shall be replaced, as directed by the Engineer, at the Contractor's expense. In order to expedite the inspection and testing of materials, the Contractor shall notify the Engineer of his proposed sources of supply prior to delivery of materials to the work. At the option of the Engineer, materials may be

inspected, tested, and approved at the source of supply before delivery is started.

Unless otherwise provided, tests will be performed in accordance with the standard methods of AASHO or ASTM as cited in these Specifications. Tests will be performed by and at the expense of HA unless otherwise noted in the Plans or in Special Provisions. All samples will be taken by a qualified representative of HA. Copies of test results will be furnished to the Contractor at his request.

HA may retest all materials which have been tested and accepted at the source of supply after the same have been delivered. All materials which, when retested do not comply with the requirements of the Specifications will be rejected.

107.03 LOCALLY AVAILABLE NATURAL MATERIALS

Certain sources of locally available natural materials may be designated on the Plans and described in Special Provisions. The quality of material in such deposits will be considered acceptable in general, but the Contractor shall determine for himself the amount of equipment and work required to produce material meeting the specification requirements. It shall be understood that the acceptability of an entire deposit of natural material can not be guaranteed, that variations are usual and expected. The Engineer may order procurement of material from any portion of a deposit, and may reject other portions as unacceptable.

HA may acquire and make available to the Contractor the right to take materials from sources designated on the Plans and described in Special Provisions, together with the right to use such property as may be specified for plant site, stockpiles, and hauling roads.

If the Contractor desires to use material from sources other than those designated, or if material deposits are not designated,

the Contractor shall provide material acceptable to the Engineer. All costs related to acquiring necessary rights, exploring and developing such sources shall be considered to be included in the unit prices bid for the work.

When sources of material are provided by the Contractor, he shall, without charge, provide the Engineer with samples for testing to determine the suitability of the material. Tests of such samples will be performed by HA.

107.04 CERTIFICATE OF COMPLIANCE

The Engineer may permit use, prior to sampling and testing, of certain materials or assemblies which are covered by a Certificate of Compliance stating that such materials or assemblies fully comply with the requirements of the Plans and Specifications. This Certificate shall be prepared in a form acceptable to the Engineer and shall be signed by the manufacturer or producer. Each lot of such materials or assemblies delivered to the work must be covered by a Certificate of Compliance in which the lot is clearly identified.

Materials or assemblies used on the basis of Certificates of Compliance may be sampled and tested at any time, and if found to be not in substantial conformity to the requirements will be subject to rejection, removal, and replacement in the work at the Contractor's expense.

The Engineer has the right at all times to refuse permission for the use of materials or assemblies on the basis of Certificates of Compliance.

107.05 INSPECTION OF MATERIALS AT MANUFACTURING PLANTS

"Source of supply" as cited in the foregoing Subsections shall include manufacturing plants. The Engineer may require that manufacturing plants be inspected periodically for com-

pliance with specified manufacturing methods and that product samples be tested in the HA laboratory for compliance with material quality requirements.

In the event that inspection at manufacturing plants is required, the following conditions shall be met:

(1) The Contractor shall assist the Engineer in obtaining the full cooperation of the manufacturer, and shall furnish without charge all reasonable facilities that the Engineer may require for collecting and forwarding samples.

(2) The Engineer shall have full access at all times to such parts of the plant as are involved in the production of materials for use in HA works.

(3) Aggregate crushing or screening facilities shall be equipped with suitable sampling devices.

(4) Adequate safety measures shall be provided and maintained for HA Inspectors.

107.06 MATERIALS PROVIDED BY HA

(1) HA will make available to the Contractor for use in connection with and under the terms of the contract, such materials as are listed and described in the Special Provisions. These materials will be provided to the Contractor at the times and locations stipulated, or if not so stipulated, in sufficient time and at the proper location to enable the Contractor to complete the work on schedule.

In the event that materials to be provided by HA are not made available to the Contractor at the stipulated or agreed time and place, the Engineer will, upon the Contractor's request, make a determination of the delay occasioned thereby, and will equitably adjust the working time and contract price, if any, by Supplemental Agreement.

In the event that materials to be provided by HA are

received by the Contractor in a condition not suitable for the intended use, the Contractor shall notify the Engineer of such fact within ten (10) days after receipt of such materials.

The Engineer will then replace the unsuitable materials or have them made suitable by the Contractor, with related costs to the Contractor paid for as Extra Work or as Cost-Plus Work. In this case the Engineer will, upon request of the Contractor, make an equitable adjustment of the contract working time.

(2) By written notice to the Contractor, the Engineer may decrease, by any amount, the quantity of materials to be provided by HA from that stipulated in the Special Provisions, and the Contractor shall not be entitled to contract price adjustment. The Contractor shall, in this event, furnish the necessary materials at the unit bid price given in the contract for this eventuality. The Engineer will, upon request of the Contractor, make an equitable adjustment of the contract working time for any delay occasioned by this procedure.

(3) Materials provided by HA shall, unless otherwise provided in the Special Provisions, be used only for the work contemplated in the contract.

(4) The Contractor shall maintain and administer, in accordance with sound technical practice, a program for transportation, handling, storage, protection and preservation of the HA-furnished materials and shall be responsible for such materials except in case of Force Majeure. Deductions will be made from payments due the Contractor to correct for shortages, deficiencies or damages which are not justified or accountable. In the case of loss or destruction of such materials due to the Contractor's fault or negligence,

the Contractor shall replace the lost or destroyed materials, or indemnify HA a sum totaling three (3) times the value of such materials based on their prices specified in the Special Provisions. This indemnity will be deducted from payments due or to become due the Contractor.

(5) The Engineer shall at all reasonable times have access, for inspection, to the premises wherein any HA furnished material is located.

(6) Upon completion of the contract or at such earlier dates as may be fixed by the Engineer, the Contractor shall submit in a form acceptable to the Engineer a list covering all items of HA furnished materials not consumed in the performance of the contract (including any resulting salvage).

(7) The Contractor shall return all HA furnished materials not consumed in the performance of the contract in as good condition as when received or as made suitable under (1) above.

107.07 FOREIGN MATERIALS

Materials manufactured outside the country shall be delivered to approved locations within the country where they shall be kept until sampling and testing are completed.

The Contractor shall, at no cost to the Government, arrange for any required testing which HA is not equipped to perform. All testing arranged for by the Contractor shall be performed in the country and shall be observed by the Engineer's authorized representative.

Each lot of foreign material shall be accompanied by a Certificate of Compliance in accordance with the provisions of Section 107.04. Certified test reports must be attached to the Certificate of Compliance when these are required by the Engineer. These must clearly identify the lot to which they apply.

Structural materials requiring reports of chemical and physical analysis will be accepted only from those manufacturers who have previously established to the satisfaction of the Engineer the adequacy of their manufacturing quality control to assure uniform material which is in conformance with the contract requirements. No structural materials will be accepted which can not be clearly identified with reports of chemical and physical analysis and Certificates of Compliance.

107.08 STORAGE AND HANDLING OF MATERIALS

Materials must be stored in such a way as to preserve their quality and fitness for the work. Materials must be placed on wood floors or hard, clean surfaces, and well arranged to ease the Engineer's inspection. Stored materials must also be well covered and protected from the elements whenever necessary, as instructed by the Engineer. After testing, materials must be kept separate for use in the work as indicated and shall not be used for other work without authorization of the Engineer. Stored materials, even though approved before being placed in storage, may again be inspected, sampled, and tested prior to their use in the work.

Certain portions of the right-of-way not required for public travel may be used for storage purposes with permission of the Engineer. Any additional space needed for storing materials must be provided by the Contractor at his expense. Private property shall not be used for storing materials without the written permission of the owner or lessee. Copies of such written permission must be given to the Engineer upon his request.

Upon completion of the work all storage sites shall be restored to their original condition by the Contractor at his expense.

Materials shall be handled in such a way as to preserve

their quality and fitness for the work. Aggregates shall be transported in tight vehicles constructed so as to prevent loss or segregation of the particles after loading and measuring. Flammable materials, in particular petroleum fuels, and highly volatile or toxic petro-chemicals, shall be handled in accordance with the governing safety public health regulations.

Storage and handling of particular materials which will be incorporated into the work shall be as required in the various following Sections of these Specifications or in Special Provisions.

107.09 UNACCEPTABLE MATERIALS

Materials which are considered defective and therefore unacceptable shall include segregated aggregate materials, other materials which have been damaged or contaminated in storage (even though previously tested and approved), and any and all materials which for any reason do not meet the requirements of the Plans and Specifications.

All of the provisions of Section 106.14, Removal of Unacceptable and Unauthorized Work, shall also apply to unacceptable materials.

All materials which are rejected by the Engineer as unacceptable and for which no payment is made under the terms of the contract shall remain the property of the Contractor. All such materials shall be removed from the project by the Contractor at his expense prior to scheduling the final inspection of the work. Presence of rejected materials on the project at the time of final inspection will be cause for the Engineer to refuse acceptance of the work.

107.10 PROJECT ENGINEER'S OFFICE AND LABORATORY

The Contractor shall provide suitable shelter to be used as an office and laboratory by the Project Engineer, Inspectors

and other HA personnel assigned to the Project for control of work and materials. Such shelter shall have a minimum floor area of twenty (20) square meters (215 sq. ft.), a minimum dimension of three and one-half (3.5) meters (11.5 ft.), one (1) entrance door, and a minimum of two (2) windows. The shelter shall be well constructed and weatherproof. Windows shall be fitted with steel bars and the entrance door shall be substantial, securely attached, and fitted with a suitable lock. The interior shall contain:

1 drawing table

2 desks with chairs

2 closets with locks

1 washing sink with a minimum dimension of forty-five (45)cm. (18 in.), a minimum capacity of twenty (20) liters ($5\frac{1}{4}$ gal.), and fitted with a drain pipe to the outside.

The Contractor shall provide and maintain a water supply not less than 200 liters (50 gal.), piped to the washing sink. Non-potable water is permitted, providing it is clear and not salty.

Such shelter shall be furnished with electricity, wherever reasonably available, at the Contractor's expense.

A facility meeting the foregoing requirements may be a separate structure provided only for this purpose which is either fixed in its location or movable, or may be provided within other buildings maintained at the work site by the Contractor for his own use. In either case, the facility must be in a location easily reached from the work site, and the Engineer's assigned personnel must be given full independent control over access to the facility at all times.

All costs of providing the shelter for use as a Project Engineer's office and laboratory shall be considered as included in the contract prices for the various items of work.

SECTION 108 LEGAL OBLIGATIONS AND RESPONSIBILITY TO THE PUBLIC

108.01 LAWS TO BE OBSERVED

In addition to the provisions of these Specifications, the Contractor will be considered at all times as being fully informed regarding the current Government regulations, decree-laws, decrees, arretes, ordinances, and local regulations which in any manner pertain to those who are employed in the work, or materials, equipment, or methods to be used in performance of the work. He shall at all times comply with, and indemnify and protect the Government, HA and its representatives against any claim or liability arising from the violation of any such regulation, decree-law, decree, arrete, ordinance, or local regulation, whether by himself, his employees, his agents, his suppliers, or his subcontractors.

108.02 HIRING OF WORKERS

Not less than eight (8) days before beginning work on the project, the Contractor must advise the local Labor Agency as to his labor requirements at the work site.

This requirement must be classified by jobs offered along with details pertaining to the work, salary, and other necessary information which will be useful to jobless persons seeking work. The Contractor must repeat these procedures at appropriate times when new recruiting is necessary, as when the workload is increased.

The Contractor must interview candidates recommended by Labor Agencies. However, he has the full right to select his workers, and he is not obligated to hire workers who do not have the required speciality. When he refuses to hire a candidate, the Contractor must give his reason for refusal on

the recommendation slip and return it to the Labor Agency.

The required labor strength covers all personnel needed for the work, except those persons who are employed by the Contractor at the time of award of the contract.

If the Labor Agency fail to recommend candidates to the Contractor within fifteen (15) days after being advised of his requirement, then the Contractor has the right to recruit workers by his own means.

108.03 FOREIGN WORKERS

The percentage of foreign persons employed on the project by the Contractor shall not exceed the percentage prescribed in Special Provisions, if any, with respect to current labor regulations.

To enable the Engineer to follow close application of this provision, the Contractor shall periodically update the list of his workers indicating their nationality, technical capability, hiring procedure, and date of employment. This list must be submitted to the Engineer upon his request.

The provisions of this Section shall not in any way annul or affect the application of any International Agreement.

108.04 APPLICATION OF LABOR LAWS AND REGULATIONS TO CONTRACTOR'S PERSONNEL

The Contractor is responsible for application of labor laws and regulations to his personnel, with particular regard to minimum wages, health, and safety.

The wages paid to workers of each category shall not be less than the minimum rate fixed by the Ministry of Labor. Payment for overtime worked beyond the legal time limit shall

be increased in conformance with current labor regulations, or with general labor agreements applied to the various categories of workers in each locality, if higher rates are provided in these agreements.

The Contractor may, in exceptional cases, apply a lower wage rate to workers who are obviously less capable than other workers of the same category. The maximum proportion of these workers in any category and the percentage of reduction of their wages must conform to current labor regulations.

In addition to the obligations fixed by current regulations in the matter of labor inspection, the Contractor shall show, upon request of the Engineer, all necessary documents which indicate that the wages paid to workers are not lower than the established wage rates. Government officials shall have the right to witness the payment of workers.

If payment of wages to workers is not made on a fixed date or their wages are lower than the established rates, the Engineer will notify the local Labor Agency for necessary action against the Contractor, according to law.

In the case of sickness or injury to any worker at the work site, the Contractor shall immediately provide appropriate transport of the sick or injured worker to the nearest hospital or to his home, depending upon the nature of the sickness or injury and the request of the worker. The Contractor shall comply with requirements of the labor law pertaining to providing suitable first-aid stations at the work sites.

In addition to provisions of the labor law or these Specifications concerning working conditions, the Contractor shall afford to his personnel other working benefits which might be required in local regulations, in general labor agreements, or in professional traditions. The Contractor shall not require any person to work in surroundings or under conditions which

are unsanitary, hazardous, or dangerous to health or safety.

The Engineer has the authority to order or permit temporary exceptions to the foregoing provisions of this Section, particularly with regard to working time and holidays, if this is in the public interest.

The Contractor shall post at the work site a notice showing the name, title and address of the HA Project Engineer, the name and address of the local Labor Inspector, and the minimum wage rates established by the Ministry of Labor. The cost of this posting shall be considered as included in the contract prices for the work.

The Contractor shall notify his subcontractors, agents, suppliers, and all other appropriate parties as to the provisions of this Section and shall be responsible for their actions thereunder.

108.05 PATENTED DEVICES, MATERIALS AND PROCESSES

In accepting and signing the contract, the Contractor agrees to release HA and the Government from all complaints, claims, and damages which may arise from his use of any design, device, material, or process which is covered by patent, copyright, or registered trademark. When necessary, the Contractor shall obtain the necessary authorizations or permits from owners of patents, copyrights, or trade marks and pay any fees, taxes, or damages for which he is liable.

If any third party lodges a complaint against HA or the Government because of the Contractor's unlawful use of patented or copyrighted designs, devices, materials, or processes, the Contractor will be responsible to the court for the payment of all legal costs and damages involved.

108.06 PUBLIC SAFETY AND CONVENIENCE

The Contractor shall perform the work and manage his operations in such a way as to at all times ensure and protect the safety and convenience of the public, and avoid disruption or interference with the movement of traffic on both public and private roads.

The safety and convenience of the general public and the residents along the project, and the protection of persons and property shall be provided by the Contractor as specified in Section 105.03.

108.07 CONSTRUCTION OVER OR ADJACENT TO NAVIGABLE WATERS

If any construction work is to be done over, within, or adjacent to navigable waters or streams, the Contractor shall regulate and manage his operations so as not to cause any interference with the movement of vessels.

No work shall be started or carried on within or over any shipping channel without the knowledge and prior approval of the Directorate of Navigation and/or other authorities having control over such waters. Not less than fifteen (15) days before beginning any work over, within, or adjacent to any navigation channel, the Contractor shall send written notice to :

Chief of Inland Waterways Service
Directorate of Navigation

or any other authority as may have jurisdiction over the use of waterways at the construction site.

This notice must state the precise location of the work, the nature of the work, the date work is to begin, and the

approximate duration. No work shall begin until this notice has been acknowledged by the proper jurisdictional authority and arrangements have been made for posting the proper navigation signals for any channel obstructions contemplated in prosecuting the work.

The Contractor shall be responsible for and pay any damages in connection with complaints, lawsuits, and other actions arising from his operations over, within, or adjacent to navigable waters.

108.08 PROTECTION AND RESTORATION OF PROPERTY AND LANDSCAPE

The Contractor shall be solely and directly responsible for any damage, loss, or inconvenience to public or private property and for any suits, actions, or claims of any character brought on account of any injuries or damages which may result from his manner of conducting the work. When any direct or indirect damage or injury is done to public or private property by or because of any act, omission, neglect or misconduct in prosecution of the work by the Contractor, he shall restore such property, at his own expense, to a condition equal to that existing before the damage was done.

When the work sites are adjacent to or within the property of railroads, shipping ports, airports, highways, telephone, electric, water supply, sewerage systems and underground structures, trees, crops, fences or other properties and facilities which are vital to the public, the Contractor must obtain all necessary information regarding such properties and shall give notice in writing to the owners, or the proper authority, at least 48 hours before his operations will affect such property. He shall proceed with the work only when protective measures have been taken with approval and under authority of the concerned owners or agencies.

Land survey or boundary markers established by the Land Bureau or Geographic Agencies or by private persons must be carefully protected by the Contractor and must not be moved or in any way disturbed except under instructions and when witnessed by the concerned agencies or owners of the properties.

HA will make necessary arrangements with concerned agencies for removal of public utilities and other properties which cause hindrance to the Contractor's operations. The Contractor shall cooperate with these agencies in order to afford uninterrupted progress of his work and to avoid breaks in the operation of public facilities. If a break occurs in the water supply, electric or other public utility systems, the Contractor must immediately notify the concerned agency and fully cooperate in making the necessary repairs as promptly as possible.

When damage to public or private property, other than public utility systems, is brought to the attention of the Engineer, he will make an inspection to determine if the damage has been caused by any act on the part of the Contractor in conducting the work. If such is found to be the case, the Engineer will so notify the Contractor in writing. Within forty-eight (48) hours after receiving such notice, the Contractor shall show to the Engineer conclusive evidence that he has arranged for repair of the damage to the satisfaction of the owner. Upon failure of the Contractor to meet this deadline, the Engineer may undertake the necessary repairs to the satisfaction of the owner, and may deduct the resulting costs from payments due or to become due the Contractor. If such costs exceed the amount of payments due or to become due the Contractor, the Contractor shall pay the difference.

108.09 USE, STORAGE, AND DISPOSITION OF EXPLOSIVES

The Contractor shall at all times observe current laws and regulations with regard to the purchase, transporting, storing, and use of explosives.

When the use of explosives is necessary for prosecution of the work, the Contractor shall use the utmost care not to endanger life or property, including new work, and shall be fully responsible for all damage resulting from the use of explosives.

The Contractor shall notify each resident, property owner, and public utility agency living, or having structures or facilities near the work site of his intention to use explosives. Such notice shall be given sufficiently in advance to enable them to take the necessary steps to protect their persons and property from injury or damage.

All explosives shall be stored in a secure manner. Where no local regulations apply, storage places for explosives shall in general not be less than three hundred (300) meters (1000 ft.) from any road, airport, building, or area of human occupancy.

108.10 BARRICADES, WARNING DEVICES, SECURITY, AND GUARD FACILITIES

Maintenance of traffic through or crossing the project and provisions for traffic control, including the erection of barricades, signs, lights, signals, and the posting of flagmen and watchmen shall be as specified in Section 105.03.

The erection of fences or walls by the Contractor for the protection of stored materials or portion of the work shall be subject to the approval of the Engineer.

All costs for the erection of fences or walls or posting of guards for security of materials and work shall be considered as included in the contract prices for the various items of work.

108.11 RESPONSIBILITY FOR DAMAGE CLAIMS

The Contractor shall indemnify and protect the Government, HA, its officers and employees from all lawsuits, actions, or claims of any nature which may be brought because of any injuries or damages to persons or properties on account of the Contractor's operations; or in consequence of any neglect in safeguarding the work; or through the use of unacceptable materials ; or because of any act of omission, neglect, or misconduct of the Contractor; or because of violation by the Contractor of any law, decree, arrete, ordinance, or regulation, or infringement of any patent, trademark or copyright.

If the Government or HA or any of its officers or employees should be named in any lawsuit as a result of any of the foregoing causes on the part of the Contractor, the Contractor's Performance Bond or surety may be retained until such lawsuit is settled and suitable evidence to that effect is furnished to HA; except that the Performance Bond or surety will not be retained if the Contractor produces satisfactory evidence that he is adequately covered by public liability and property damage insurance.

108.12 CONTRACTOR'S RESPONSIBILITY FOR WORK

Until final written acceptance of the work is given by the Engineer, the Contractor shall have the full charge and care of the project and shall take every precaution against injury or damage to any part of the project by action of the elements or from any other cause, whether it may arise from prosecution or non-prosecution of the work. The Contractor shall rebuild, repair, restore, and make good all injuries or damages to any portion of the work resulting from such causes before the final acceptance, and shall bear the related cost.

The Contractor shall take all necessary and appropriate measures to assure that stored materials, prefabricated structural components, and other items to be used in the work will not be damaged, lost, or destroyed by wind, rain, flood sea waves, or other atmospheric occurrences. The Contractor, shall repair, replace, and make good all injuries and damages to such items resulting from his failure to take protective measures, and shall bear the related cost.

The above provisions will not apply to occurrences which are beyond the Contractor's control, on condition that the Contractor must notify the Engineer in writing within ten (10) days after any occurrence resulting in loss or damage to the work or materials. Upon receipt of such notice, the Engineer

will consider the Contractor's claims for extra costs and damages resulting from occurrences beyond his control. After this ten (10) day time limit, the Contractor's claims will not be acceptable.

In no circumstances, including those which are recognized as being beyond the Contractor's control, shall any claim be considered for loss or damage to movable tools and equipment.

108.13 SUSPENSION OF WORK

In case of suspension of work from any cause, the Contractor shall be responsible for the project and shall take all precautions that may be necessary to prevent damage to the work, shall provide for normal drainage, and shall erect any necessary temporary structures, signs, or other facilities, bearing all costs so incurred. During any period of suspension, the Contractor shall properly and continuously maintain the work in accordance with the provisions of Section 105.03.

When temporary suspension of the work is ordered for any period and for any reason, the Contractor shall store his materials and equipment in such a way that these will not be damaged, lost, or cause obstruction to traffic. The Contractor shall also take all necessary steps to prevent damage to completed or partially completed work during the period of suspension, and shall not remove any equipment, tools, or materials from the project except with written approval of the Engineer.

When HA orders that work be suspended for a period of less than six (6) months, the Contractor shall have no right to request termination of his contract, but may present a claim for damages if he has losses which can be proven to result directly or indirectly from the ordered suspension. Such claim shall be acceptable only within a period of one (1) month after the end of the suspension period.

After notification of contract approval, if HA orders that work be suspended for a period of more than six (6) months, either before or after issuance of Notice to Proceed, the Contractor will have the right to request termination of his contract, and may present a claim for damages, if any. The Contractor's request for termination of his contract shall only be acceptable within three (3) months after receipt of the order to suspend the work. If this order gives no time limit for suspension of the work, the Contractor's request for contract termination is only acceptable within a period of one (1) month after work has been suspended for six (6) months. The foregoing provision is applicable when work is suspended several times during the term of the contract and the cumulative suspension time exceeds six (6) months, even though work is resumed after each suspension.

In case of any suspension of work for a continuous period of more than six (6) months, the Contractor may request acceptance and payment for partial works which have been completed.

If HA orders permanent suspension of the work, the contract will be immediately terminated, and the provisions of Section 109.09 shall be in effect.

108.14 PROVIDING RIGHT-OF-WAY

HA will be responsible for acquiring and providing all necessary right-of-way in advance of construction. Any exceptions to this will be indicated in the plans and in Special Provisions.

108.15 PERSONAL LIABILITY OF PUBLIC OFFICIALS

In carrying out any of the provisions of these Specifications, or in exercising any power or authority granted to them by or within the scope of the contract, there shall be no liability upon the Chairman of the HA Administrative Council, the Director General, or any of their authorized representatives,

either personally or as officials of HA, it being understood that in all such matters they act only as agents and representatives of HA.

108.16 NO WAIVER OF LEGAL RIGHTS

Final acceptance of the work shall not constitute a waiver of any legal rights of HA nor preclude HA from correcting any measurement, estimate, or certificate made before or after completion of the work; nor shall HA be precluded from recovering from the Contractor or his surety the amount of any overpayments which might be made, or the amount of cost incurred because of failure by the Contractor to fulfill his obligations under the contract.

The Contractor, without prejudice to the terms of the contract, shall be liable to HA for latent defects, fraud or such gross mistakes as may amount to fraud, or as regards HA's rights under any guaranty or warranty.

108.17 ENVIRONMENTAL PROTECTION

The Contractor shall comply with all laws, decree-laws, decrees, arretes, and local regulations controlling pollution of the environment. He shall take all necessary and required precautions to prevent pollution of streams, lakes, and water reservoirs with fuels, oils, bitumens, chemicals or other harmful materials, and to prevent pollution of the atmosphere from particulate or gaseous matter.

SECTION 109 PROSECUTION AND PROGRESS

109.01 SUBLETTING OF CONTRACT

The Contractor shall not sublet, sell, transfer, assign, or otherwise dispose of his contract or any parts of it without the written consent of HA. If this consent is given, the Contractor will be permitted to give a portion of his work to subcontractors. In any case, the Contractor shall perform with his own organization, work amounting to not less than 50% of the total contract amount.

Giving portions of the work to subcontractors will not relieve the Contractor of any responsibilities and obligations under the contract; he shall remain as the only responsible party toward HA.

109.02 NOTICE TO PROCEED

The Notice to Proceed will stipulate the date on which it is expected the Contractor will begin the work. This will be the beginning date of contract working time.

If the Contractor begins any work on the project prior to issuance of the Notice to Proceed, such as mobilization of equipment and labor or collection of materials, contract working time will still be counted from the date stipulated in the Notice to Proceed.

109.03 PRE-CONSTRUCTION CONFERENCE

Upon award of the contract, and prior to issuance of the Notice to Proceed, the Engineer will advise the Contractor of the date, time, and place for a Pre-Construction Conference to be attended by representatives of HA and the Contractor. The Contractor's project superintendent is required to attend this conference.

The Contractor shall submit to the Engineer at the time of

the Pre-Construction Conference, his progress schedule for prosecution and completion of the work. The Contractor's progress schedule will be reviewed in the conference and approved, with inclusion of any mutually agreed changes or modifications.

The Engineer has the option to waive the requirement for a Pre-Construction Conference if this is in the best interests of HA. In this case, the Contractor shall be required to submit his progress schedule not less than seven (7) days prior to beginning work.

109.04 SCHEDULED PROGRESS OF THE WORK

The Contractor shall submit to the Engineer in accordance with the provisions of Section 109.03 a progress schedule showing the sequence by which he proposes to undertake the work and the dates on which he contemplates beginning and completing the major items of work.

The Contractor shall schedule the commencement and prosecution of his work in such a way that growing food crops encountered within the Right-of-Way are left undisturbed to allow harvesting at maturity.

The Contractor shall use all practical means to make the progress of the work conform to that shown in the progress schedule which is in effect. If the work falls behind the scheduled progress, the Contractor shall take such steps as may be necessary to improve his progress. In event of his failure to do so, HA may require him to increase his labor force, working hours per day, working days per week, or amount of equipment, so as to bring his progress into conformity with the approved schedule, all without additional cost to HA.

If the progress of the work falls 20% or more behind that given in the Contractor's approved progress schedule (based

on the total contract amount) at any time during the performance of the work, the Engineer will advise the Contractor of this delinquency and direct him to submit a revised progress schedule. The Contractor may be eliminated from the HA list of Prequalified Contractors for as long as the delinquent progress status exists.

The Contractor shall submit a revised progress schedule on any occasion that an extension of the contract working time is approved by the Engineer.

The revised progress schedule must show how the Contractor proposes to complete the balance of the work within the allotted working time. The Contractor shall submit a revised progress schedule within ten (10) calendar days after the date of request by the Engineer. The Contractor shall make every progress schedule consistent with all the contract requirements regarding the sequence of performance of various portions of the work. No payment will be made to the Contractor while he is delinquent in complying with the Engineer's request to submit a revised progress schedule.

One month after the submission of a revised progress schedule, necessitated by delinquent progress, if the progress of the work is 20% or more behind this revised progress schedule, the Contractor will be considered in default of his contract.

109.05 CHARACTER OF WORKMEN, METHODS AND EQUIPMENT

The Contractor shall at all times employ sufficient labor and equipment for carrying on and completing the work in the manner required by these specifications and in the time allotted in the contract.

All workmen shall have sufficient skill and experience to

properly perform the work assigned to them. Workmen engaged in work requiring special skills, such as operation of equipment, shall have sufficient training and experience in such work and in operation of the equipment to perform the work in a satisfactory manner.

Any person employed by the Contractor or any subcontractor who, in the judgement of the Engineer, does not perform his work in a proper and skillful manner, or who does not properly comport himself during working hours shall, at the written request of the Engineer, be expelled from the project. Such person shall not again be employed on the same project except under written approval of the Engineer. If the Contractor fails to expel such person or fails to employ suitable personnel for satisfactory prosecution of the work, the Engineer may suspend the work, by written notice, until there is compliance with his request. The Contractor will not be allowed any extension of contract working time because of this suspension.

All equipment used in the work shall be of sufficient capacity and in such mechanical condition as to meet the requirements for the work and to produce finished work of satisfactory quality.

When the methods and equipment to be used in accomplishing the construction are not prescribed in the contract, the Contractor will be permitted to use any methods or equipment that will accomplish the work in accordance with the plans and specifications.

When the plans or specifications direct the use of certain methods and equipment, these shall be employed by the Contractor unless others are authorized by the Engineer. If the Contractor desires to use a method or type of equipment other than that specified, he must request the necessary authorization from the Engineer. His request shall be in writing and shall include a full description of the methods and equipment proposed

and of the reasons for desiring to make the change. If approval is given, it will be on the condition that the Contractor will be fully responsible for producing work which is in conformity with all of the requirements. If, after trial use of the alternate methods or equipment, the Engineer determines that the work produced does not meet the requirements, the Contractor shall discontinue use of the alternate method or equipment and complete the remaining work by use of the specified methods or equipment. The Contractor shall remove and replace any deficient work, or take other corrective actions directed by the Engineer. No change will be made in the basis of payment for the various items of work, nor in allotted contract working time, as a result of the Engineer's authorization for use of alternate methods or equipment.

109.06 DETERMINATION AND EXTENSION OF CONTRACT WORKING TIME

The time allowed for completion of all the work under the contract will be given in the Proposal and/or Special Provisions and will be known as the "Contract Time".

The contract time shall be counted from the beginning date as defined in Section 109.02. Contract time will include all Sundays, holidays, and non-work days.

When the contract time is fixed in days, this time will expire at the end of the last day of the time stipulated in the contract.

When the contract time is fixed in months, the solar calendar shall apply, and the time will be counted from the stipulated date in the starting month to the corresponding date in the expiring month. If the corresponding date does not exist in the expiring month, the contract time will expire at the end of the last day of the expiring month.

All calendar days elapsing during any suspension of the work which is ordered by the Engineer for reasons beyond the Contractor's control will be excluded from the counting of contract time.

The determination of contract working time is given careful consideration by HA in the preparation of plans and proposals for the work contemplated. The time allowed for completion of the project is based on the estimated quantities of the various items of work as defined in Section 103.06. If satisfactory fulfillment of the contract requires an increase in the quantity of any major item of work in addition to that given in the proposal, the contract time will be increased on a basis commensurate with amount and difficulty of the added work. The Engineer will advise the Contractor of such additional work, and the extension of time allowed, by an official order.

If during prosecution of the work the Contractor finds that it is impossible for reasons beyond his control to complete the work within the contract time as specified or as extended in accordance with the above provisions, he may submit a written request to the Engineer for an extension of time setting forth the reasons which he believes will justify the granting of his request. Such request must be submitted to the Engineer prior to the expiration of allotted contract time. The Contractor's plea that insufficient time was given in the proposal shall not be accepted as a valid reason for extending the contract time. If the Engineer finds the Contractor's request to be reasonable, valid, and justified, and that delay of the work is caused by conditions beyond the control and without the fault of the Contractor, he may extend the time for completion by such amount as the conditions justify. The extended time for completion shall then be in full force and effect the same as though it were the original contract time.

When final acceptance of the work has been made by the

Engineer as prescribed in Section 106.16, the counting of contract time will cease.

109.07 FAILURE TO COMPLETE THE WORK IN TIME

For each calendar day that any work remains uncompleted after expiration of the allotted contract time and any extensions granted under the provisions of Section 109.06, the amount stipuluted in the proposal will be deducted from any money due the Contractor as liquidated damages.

Liquidated damages are assessed without prior notice, effective from the expiration date of contract time as stipulated or as extended.

Permitting the Contractor to continue and complete the work or any part of it after the time fixed for completion, or after the date to which the contract time may have been extended, shall in no way constitute a waiver on the part of HA of any of its rights under the contract. Assessment of liquidated damages shall not cause any obstacle to enforcement against the Contractor of any applicable provisions of the contract.

In certain cases, HA may waive such portion of the liquidated damages as may accrue after the project is in condition for safe, convenient, and unrestricted use by the traveling public. Judgement for exercising such waiver lies entirely with HA.

109.08 DEFAULT AND TERMINATION OF CONTRACT

The Contractor is in default of his contract if he:

Fails to begin the work within the time specified in the Notice to Proceed.

Fails to perform the work with sufficient workmen, equipment or materials to assure prompt completion.

Performs the work unsuitably or neglects or refuses to remove and again perform work, or removes and replaces material that is rejected by the Engineer as being unacceptable.

Discontinues the work without an order for suspension from the Engineer.

Fails to resume work, which has been suspended, within a reasonable time after receiving notice to do so.

Fails for any reason to carry on the work in an acceptable manner.

Refuses to accept a Change Order issued in accordance with the provisions of Section 105.02(2) (a).

Fails to comply with the provisions of Section 106.09(5).

Fails to comply with the provisions of Section 109.04.

Fails to comply with any official order of the Engineer.

If the Contractor is found to be in default, the Engineer will give written notice to the Contractor and his surety of such default, specifying the same and directing what action shall be taken. The Contractor or his surety shall have ten (10) days after receipt of such notice to take necessary action for correction of the conditions which cause him to be in default.

If the Contractor or his surety fails to act within this time, HA shall have the full power and authority, without violating the contract, to apply either of the following procedures:

1. HA may terminate the contract, with forfeiture of the Contractor's Performance Guaranty, and eliminate the Contractor from the HA list of Prequalified and Registered Contractors for a term to be determined by HA. HA shall have the option to purchase from the Contractor any acceptable materials stored on the job-site at the contract unit prices, or in the absence of contract prices,

at the prices agreed upon by both parties. HA may also take any appropriate or necessary legal action against the Contractor.

2. HA may take the prosecution of all or any portion of the work out of the hands of the Contractor without violation or prejudice to the contract and continue the work by either or both of the following procedures, according to the best interest of HA:

(a) The work may be continued by HA forces. In this case the Contractor may continue the presence of his personnel and equipment on the work, and may observe the performance of the work, but shall have no right to prevent others from executing the Engineer's orders. HA may appropriate and use any and all materials which have been delivered and/or equipment required for prosecution of the work, or take such other steps as in the opinion of the Engineer are required for completion of the work in an acceptable manner.

The counting of contract time shall continue during any period that the Contractor is in default and prosecution of the work is in the hands of HA forces. In this case, if the time for completion of the work exceeds the contract time, the assessment of liquidated damages may be waived at the discretion of HA. During any such period no payment will be made to the Contractor for work performed, except for previously delivered materials which are incorporated into the work.

Prosecution of the work by HA forces will be ended if the Contractor shows conclusive evidence that he is prepared to rectify that which caused him to be in default, and is provided with all means to continue the work and complete the project in a satisfactory manner.

The Contractor shall have no right or ground for complaint against this procedure.

(b) HA may enter into a separate agreement for completion of any portion of the contract according to its terms and provisions. In this case, the contract will be terminated with respect to those items of work which are placed under separate agreement. The Contractor shall not receive further payment for such items of work, nor shall any adjustment be made of any unit prices for any remaining items of work left in the hands of the Contractor. Contract time for the completion of such remaining items will be adjusted as directed by HA.

The Contractor shall have no right or ground for complaint against this procedure.

If prosecution of the work by HA forces or by separate agreement should lead to an increase in costs incurred by HA in excess of the original contract amount, any and all such costs shall be deducted from any money due or to become due the Contractor. If such costs exceed the amount which may be payable to the Contractor, then the Contractor and his surety shall be liable and shall pay to HA the amount of such excess. If prosecution of the work by HA forces or by separate agreement should lead to a reduction of costs, the Contractor shall have no right to claim any benefit as a result of such reduction.

The contract shall be terminated with no damages accruing to the Contractor if:

The Contractor becomes bankrupt or is undergoing bankruptcy, unless HA can approve a request for continuation of works submitted by the Finance Manager,

provided he is authorized by a Court to continue the Contractor's business.

The Contractor comes under judicial liquidation and is not authorized to continue his business.

The Contractor dies, except when HA can approve a request for continuation of works submitted by the Contractor's heirs.

109.09 TERMINATION OF CONTRACT FOR NATIONAL EMERGENCIES AND SUSPENSIONS LONGER THAN SIX MONTHS

HA will terminate the contract or any appropriate portion thereof by written notice when the Contractor is prevented from proceeding with the work as a direct result of an Executive Order or Decree of the President with respect to the prosecution of war or in the interest of national defense. The Contractor may request termination of the contract in accordance with the provisions of Section 108.13 in the event that work is ordered by HA to be suspended for more than six (6) months.

When the contract or any portion thereof is thus terminated before completion of all the items of work, payment to the Contractor will be made for the actual number of units or items of work completed at the contract unit prices, or as mutually agreed for items of work partially completed or not started. No claim for loss of anticipated profits shall be considered.

Reimbursement for employing workers, for administrative costs (when not otherwise provided for in the contract), and for moving equipment and materials to and from the work site will be considered, the intent being that an equitable settlement should be made with the Contractor.

Acceptable materials, obtained or ordered by the Contractor

for the work and not incorporated into the work will, at the Contractor's request, be purchased by HA at the contract unit prices, or in the absence of contract prices, at the prices agreed upon by both parties. Such materials, if purchased, shall be deposited by the Contractor at points of delivery within the project limits, as designated by the Engineer.

Termination of the contract or any portion thereof under the provisions of this Section shall not relieve the Contractor of his responsibilities for the completed work; nor shall it relieve his surety of any obligation toward or concerning any justified claim arising out of the work performed.

109.10 PURCHASE OF EQUIPMENT ON TERMINATION OF CONTRACT

When the contract is terminated for any reason, HA shall have the option to buy from the Contractor all or any portion of:

Temporary structures whose installation has been accepted by the Engineer.

Special equipment manufactured or procured for performance of the work in accordance with the contract.

The amount to be paid for such temporary structures or special equipment shall be the prevailing market price, or the Contractor's landed cost in the case of imported equipment, less any appropriate deduction agreed upon by both parties for depreciation.

In no case shall such amount exceed the prevailing market cost.

109.11 FORCE MAJEURE

Force Majeure shall be considered as any unforeseeable occurrence beyond the control and without the fault or negligence

of the Contractor and his employees, including, but not restricted to cataclysmic phenomena of nature such as earthquake, tidal wave, tornado, hurricane, flood, or fire, or acts of a public enemy, acts of war, rebellion, insurrection, expropriation, disease epidemics, quarantine restrictions, strikes, freight embargoes, and delays to the Contractor's prosecution of the work resulting from such occurrences.

When, in the opinion of the Contractor, Force Majeure conditions exist, he shall notify the Engineer in writing within ten (10) days of the occurrence causing such conditions. This notice shall state the date of occurrence, the nature, and the probable duration of Force Majeure conditions. The Engineer will reply in writing, advising whether or not HA concurs in the existence of Force Majeure conditions.

If HA does not concur in the existence of Force Majeure conditions, the reasons for non-concurrence will be given in full detail, and the Contractor will be required to proceed with the work under the terms and conditions of the contract.

In the existence of Force Majeure conditions, if any, the work shall be immediately suspended and the provisions of Section 108.13 shall be in effect for the duration of Force Majeure conditions except that:

The Contractor may remove his personnel, tools, equipment, and materials from the project site to a secure location.

The Contractor shall be relieved of responsibility for damage to the work, except that which is caused by his carelessness or lack of proper supervision and control.

The Contractor shall be relieved of responsibility for Maintenance of the Work as provided in Section 105.03.

SECTION 110 MEASUREMENT AND PAYMENT

110.01 MEASUREMENT OF QUANTITIES

All work completed under the contract will be measured by the Engineer according to the standard units of measure in the country . Where English units of measure are given in these Specifications for clarity, in conjunction with metric units, the metric units shall govern in all cases.

The unit of linear measure will be the meter, or any fraction or multiple thereof in the international metric system.

The method of measurement and computations to be used in determination of quantities of material furnished and of work performed under the contract will be those methods generally recognized as conforming to good engineering practice.

In all cases the Contractor shall not rely on customs and habits to obtain any advantage for himself in counting, measuring and weighing operations.

Unless otherwise specified, longitudinal measurements for area computations will be made horizontally, and, except for structures, no deductions will be made for individual fixtures having an area of one (1) square meter or less. Unless otherwise specified, transverse measurements for area computations will be to the lines and dimensions shown on the plans or ordered in writing by the Engineer.

Structures will be measured according to dimensions and lines shown on the plans or as altered to fit field conditions.

All items which are measured by the linear meter, such as pipe culverts, guardrail, underdrains, etc., will be measured parallel to the base or foundation upon which such structures are placed, unless otherwise shown on the plans.

In computing volumes of excavation the average end area method, or other acceptable methods, will be used.

The thickness of plates and galvanized sheet used in the manufacture of corrugated metal pipe, metal plate pipe culverts and arches, and metal cribbing will be specified and measured in standard metric units.

The term "ton" will mean the metric ton consisting of 1,000 kg. All materials which are measured or proportioned by weight shall be weighed on accurate, approved scales by competent, qualified personnel at locations designated by the Engineer. If material is shipped by rail, the car weight may be accepted, provided that only the actual weight of material be paid for. Trucks used to haul material being paid for by weight shall be weighed empty, daily, at such times as the Engineer directs, and each truck shall bear a plainly legible identification mark. Each loaded truck shall be weighed for each delivery, and only the net weight of material shall be paid for.

If materials are shipped by barge or sampan, the weight of such materials will be determined by the barge displacement method. The Contractor shall furnish HA a barge load capacity chart showing the load in metric tons versus the full and empty draft reading, and with corrections for salt water versus fresh water displacement, for each barge or sampan used to deliver materials. The charts must be certified and standardized to the satisfaction of the Engineer. The cost of certification and standardization will be borne by the Contractor. The Contractor's desired loading of the barge shall be indicated by a red line marking on each end and both sides of the barges or sampans. The barges or sampans shall then be loaded until the top of the red lines are at the water level. For the purpose of insuring the correct weight of materials delivered to HA, the full load line shall be observed by the Engineer's representative prior to unloading. After the barge or sampan is completely empty, the vessel shall be inspected by the

Engineer's representative and the empty load line observed.

Car, ship, or truck weights will not be acceptable for material to be passed through mixing plants. In this case the materials will be measured by the weighing devices incorporated in the mixing plant.

If the contract specifies that aggregate material is to be paid for by the ton, the Engineer may require daily tests to determine the bulk unit weight of the material furnished by the Contractor.

Whenever the bulk unit weight of the aggregate furnished exceeds 1780 kg/m³, the weight of material furnished that day will be adjusted for payment according to the following ratio :

$$\text{Pay Weight} = \text{Weight furnished} \times \frac{1780}{\text{bulk unit weight determined by test}}$$

Material to be measured by volume in the transporting vehicle or vessel shall be transported in approved vehicles or vessels and measured therein at the point of delivery. Vehicles or vessels for this purpose may be of any size or type acceptable to the Engineer, provided that the body or hull is of such shape that the actual contents may be readily and accurately determined. All vehicles or vessels shall be loaded to at least their water level capacity and all loads shall be leveled when the vehicles or vessels arrive at the point of delivery.

When requested by the Contractor and approved by the Engineer in writing, material specified to be measured by the cubic meter may be weighed and such weights will be converted to cubic meters for payment purposes. Factors for conversion from weight measurement to volume measurement will be determined by the Engineer and shall be agreed to by the Contractor before such method of measurement of pay quantities is used.

Bituminous materials will be measured by the liter or ton.

Volumes of bituminous materials will be measured as provided in ASTM D 1250 for asphalts or ASTM D 633 for tars. Net certified scale weights or weights based on certified volumes will be used as a basis of measurement, subject to correction when bituminous material has been lost from the distributor, has been wasted, or otherwise not incorporated in the work.

When bituminous materials are shipped by railcar, drum, truck tank, or barge tank, net certified weights or volume, subject to correction for loss or foaming, may be used for computing quantities.

Cement, timber, reinforcing steel, structural steel, and all other materials not specifically mentioned in this Section will be measured as provided in the succeeding relevant Sections of these Specifications.

The term "lump sum" when used as an item of payment will mean complete payment for the work described in the contract.

When a complete structure or structural unit (in effect, "lump sum" work) is specified as the unit of measurement, the unit will be construed to include all necessary fittings and accessories.

When standard manufactured items are specified such as fence, wire, plates, rolled shapes, pipe conduit, etc., and these items are identified by gage, unit weight, section dimensions, ect., such identification will be considered to be nominal weights or dimensions. Unless more stringently controlled by tolerances in cited specifications, manufacturing tolerances established by the industries involved will be accepted.

Scales for the weighing of highway and bridge construction

materials which are required to be proportioned or measured and paid for by weight, shall be furnished, erected and maintained by the Contractor, or shall be certified, permanently installed commercial scales.

Scales shall be accurate within the tolerance specified in the governing Sections of these Specifications. The Contractor shall have the scales checked under the observation of a HA inspector before beginning work and at such other times as requested. The increments of weight measurement shall be uniform in spacing throughout the graduated or marked length of the beam or dial and shall not exceed 1/1000 of the nominal rated capacity of the scale. The use of spring balances will not be permitted.

Suitable protection shall be provided for scales incorporated in mixing or proportioning plants to prevent their weighing accuracy from being affected by wind currents.

Beams, dials, platforms and other scale equipment shall be so arranged that the operator and inspector can safely and conveniently view them. For scales used for weighing trucks, a suitable weatherproof enclosure or "house" shall be provided for beams or dials, operator, and inspector.

Scales must be tested for accuracy and serviced before use at a new site. Platform scales shall be installed and maintained with the platform level and rigid bulkheads at each end.

Scales which are overweighing (indicating more than true weight) will not be permitted to operate and the total weight for payment of all materials received subsequent to the last previous correct weighing accuracy test will be reduced by the percentage of error in excess of the specified tolerance.

In the event inspection reveals the scales have been underweighing (indicating less than the true weight), they shall be

adjusted and no additional payment to the Contractor will be allowed for materials previously weighed and recorded.

All costs in connection with furnishing, installing, certifying, testing, and maintaining scales; for furnishing test weights and scale house and for all other items specified in this Section for the weighing of highway and bridge construction materials for proportioning or payment shall be included in the contract unit prices for the various pay items of the project.

When the contract quantities for a specific portion of the work are designated as the pay quantities, they shall be the final quantities for payment for such specific portion of the work, unless the dimensions of said portions of the work shown on the plans are revised by the Engineer. If revised dimensions result in an increase or decrease in the quantities of such work, the final quantities for payment will be revised in the amount represented by the autnorized changes in the dimensions.

For increased quantities or Extra Work performed on a Cost-Plus basis, rental of equipment will be measured by time in actual working hours. If equipment has been ordered held on the job on a stand-by basis by the Engineer, half-time rates for the equipment will be paid.

110.02 SCOPE OF PAYMENT

The Contractor shall receive and accept compensation provided for in the contract as full payment for furnishing all materials and for performing all work under the contract in a complete and acceptable manner and for all risk, loss, damage, or expense of whatever character arising out of the nature of the work or the prosecution thereof, subject to the provisions of Section 108.12.

If the "Basis of Payment" clause in the specifications

relating to any unit price in the bid schedule requires that the said unit price cover and be considered compensation for certain work or material essential to the item, this same work or material will not be again measured or paid for under any other pay item which may appear elsewhere in the Specifications.

110.03 COMPENSATION FOR ALTERED QUANTITIES AND EXTRA WORK

When contract quantities are altered, or when Extra Work is performed, the Contractor shall accept as payment in full, at the contract unit prices, at adjusted unit prices, or on a Cost-Plus basis, for the accepted quantities of work done, as provided in Sections 105.02 and 110.04. No allowance except as provided in Section 105.02 will be made for any increased expense, loss of expected reimbursement, or loss of anticipated profits suffered or claimed by the Contractor resulting either directly from such changes, or indirectly from unbalanced allocation among the contract items of overhead expense on the part of the Contractor and subsequent loss of expected reimbursements therefor, or from any other cause.

110.04 COST-PLUS PAYMENT

When increased quantities or Extra Work are ordered by HA to be performed on a Cost-Plus basis, the Contractor shall be compensated for such work in the following manner:

(1) LABOR

For all workmen, equipment operators, and foremen in direct charge of the specific operations, the Contractor shall receive the rates of wages agreed upon in writing by both parties for each and every hour that each workman, equipment operator, and foreman is actually

engaged in such work, to which shall be added an amount equal to twenty percent (20%) of the sum thereof.

(2) BOND, INSURANCE, AND TAX

For property damage, liability, and other insurance premiums, and taxes in connection with such Cost-Plus work, the Contractor shall receive the actual cost, to which cost five percent (5%) will be added. The Contractor shall furnish satisfactory evidence of the rate or rates paid for such bond, insurance, and tax.

(3) MATERIALS

For materials accepted by the Engineer and incorporated in the work, except those furnished by HA, the Contractor shall receive the actual cost of such materials delivered on the work, including transportation charges paid by him, as shown by receipted bills (exclusive of equipment rental as hereinafter set forth).

If such materials are taken from the Contractor's stock, they shall be paid for at the unit prices agreed upon in writing by both parties.

To the sum of all such material costs, fifteen percent (15%) will be added.

Any such materials not remaining permanently in the work shall be the property of HA.

(4) EQUIPMENT

For any machinery or special equipment (other than small tools), the use of which has been authorized by the Engineer, the Contractor shall receive the rental rates agreed upon in writing by both parties for the actual time that such equipment is in operation on the work, to which rental sum fifteen percent (15%) will be added.

The payment thus made shall be considered as covering all fuel and lubricants, transportation costs, use of small tools and equipment for which no rental is allowed, and the time required for setting up and removing the equipment from the work.

(5) SUPERINTENDENCE AND OVERHEAD

No additional allowance will be made for general superintendence, or other overhead costs for which no specific allowance is herein provided.

(6) RECORDS

For each day, the Contractor's representative and the Engineer shall keep corresponding records of the cost of all work which is ordered to be done on a Cost-Plus basis.

(7) STATEMENTS

No payment will be made for work performed on a Cost-Plus basis until the Contractor has furnished the Engineer with duplicate itemized statements of the cost of such Cost-Plus work detailed as follows :

(a) Name, classification, date, daily hours, total hours, rate, and amount due for each laborer and foreman.

(b) Designation, dates, daily hours, total hours, rental rate, and amount due for each unit of machinery and equipment.

(c) Quantity, price, and amount due for each item of material.

(d) Costs for transporting materials incorporated into the work.

(e) Cost of property damage, liability, and other insurance premiums, and tax.

Statements shall be accompanied and supported by receipted bills for all materials used and transportation charges.

The additional payment, based on the percentages stated above, shall constitute full compensation for all types of expenses not specifically designated. The total payment made as provided above shall constitute full compensation for such work.

110.05 ELIMINATED ITEMS

Should any items contained in the Proposal be found unnecessary for the proper completion of the work, the Engineer may, upon written order to the Contractor, eliminate such items from the contract, and such action shall in no way invalidate the contract. When the Contractor is notified of the elimination of items, he will be reimbursed only for actual work done and direct costs incurred, on the project, including procurement and delivery of materials prior to said notification.

If the elimination of items should result in a reduction of the total contract amount by more than twenty-five percent (25%), the Contractor may present a claim which includes, in addition to the above costs, the indirect costs which are included in the unit prices for the eliminated items. To qualify for consideration, such a claim must include an analysis of the unit prices for the eliminated items to identify the indirect costs.

110.06 PARTIAL PAYMENTS

Partial payments will be made once each month as the work progresses. Said payments will be based upon estimates prepared by the Engineer of the value of the work performed and materials in place in accordance with the contract and for materials delivered in accordance with Section 110.07.

No partial payment will be made when the total value of the work done since the last estimate amounts to less than $500.00.

From the total of the amounts ascertained to be payable, an amount equal to ten percent (10%) of the whole will be deducted and retained by HA until after completion of the entire contract in an acceptable manner. The balance, or an amount equal to ninety percent (90%) of the whole, less all previous payments, shall be certified for payment.

Should any attachment be made against amounts payable to the Contractor by a debtor for materials, services, or financing in connection with the project, attached amounts will be deducted from the payment due and deposited by HA in the Deposit and Consignment Fund.

Any applicable modification of this provision for specific projects will be stipulated in Special Provisions.

110.07 PAYMENT FOR MATERIAL ON HAND

When requested by the Contractor and approved by the Engineer, partial payments may include the value of tested and accepted, nonperishable materials, delivered to the project and properly stored according to the Engineer's directions.

Payment for such material will be made under the category of "Material Properly Stored, But Not Used".

Prices to be paid for such material shall be as fixed in the HA Schedule of Material Prices or as agreed by both parties. In no case shall the agreed price for material on hand exceed the contract bid price.

In order for partial payment to be made for material on hand, the following conditions must be met :

(1) The material must be accepted by the Engineer for incorporation in the work.

(2) The quantity must be certified by the Engineer.

(3) Of the quantity certified by the Engineer, 75% will be allowed for payment in the partial payment estimate.

(4) The amount to be paid for the material must be not less than $500.00 before deductions.

The Contractor shall be responsible for any loss of the materials through deterioration, waste, theft, or other causes, which loss shall be replaced at the Contractor's expense.

No partial payment will be made for living plant materials until they are planted and surviving in place.

From the amount so ascertained to be payable, ten percent (10%) will be deducted and retained by HA until after completion of the entire project in an acceptable manner. The remaining ninety percent (90%) will be certified for payment together with partial payment for work performed in accordance with the provisions of Section 110.06.

110.08 ACCEPTANCE AND FINAL PAYMENT

When the project has been accepted as provided in Section 106.16, the Engineer will prepare the final estimate of the quantities of the various items of work performed. Within sixty (60) days after the date of final acceptance, the final estimate will be submitted to the Contractor for his review and approval. If the Contractor approves the final estimate, or if he files no claim within thirty (30) days of receiving the final estimate, HA will process the estimate for final payment. With approval of the final estimate by the Contractor, or after the thirty (30) day deadline, he will be paid the entire sum found to be due, including the amount retained under the

provisions of Section 110.06, after deducting all previous payments and any amounts to be retained or deducted under other provisions of the contract.

If the Contractor files a claim for additional payment in accordance with contract provisions, it shall be submitted in writing in sufficient detail to enable the Engineer to ascertain the basis and amount of such claim. In such case the final amount determined by the Engineer to be due will be paid, pending study of the claim. Upon final adjudication of the claim any additional payment determined to be due the Contractor will be computed in a supplemental final estimate and processed for payment.

All prior partial estimates and payments shall be subject to correction in the final estimate and payment.

110.09 ECONOMIC ADJUSTMENT OF PRICES

It is recognized by HA that the prices of certain construction materials and petroleum products are subject to unusual fluctuations.

When these items are required in substantial quantities, and are essential to accomplishment of the work, Special Provisions will be included in the contract to provide for the economic adjustment of prices, for the mutual protection and benefit of the Contractor and HA.

When such Special Provisions are not included in the Contract, economic adjustment of prices shall not apply.

TABLE OF CONTENTS
SECTION 200 EARTHWORK

SECTION	TITLE	PAGE
201	Clearing Site	110
202	Roadway Excavation	119
203	Embankment	131
204	Structure Excavation	141
205	Subsurface Structure Excavation	142
206	Channel and Ditch Excavation	148
207	Borrow Excavation	151

SECTION 201 CLEARING SITE

201.01 DESCRIPTION

The work of Clearing Site consists of the removal, relocation, or protection of all vegetation and small man-made objects within the limits of the project. Removal refers to, but is not limited to, removal of trees and brush, grubbing of stumps or roots, and the removal of existing bridges, structures, and houses unless plans or Supplementary Specifications indicate that these structures are to be removed by others. Relocation refers to, but is not limited to, relocation of road signs, government billboards, roadside shrines, and similar objects which shall be re-located to points designated by the Engineer. Protection refers to, but is not limited to trees, brush, shrines, and other objects designated by the Engineer to be left in place. These objects shall be protected as the Engineer directs.

201.02 METHODS OF CONSTRUCTION

Except where designated by the Engineer, the ground surface within the limits of the project shall be cleared of all trees, brush, weeds, roots garbage, debris, structures, and all other unsuitable material. Stumps less than one foot above ground surface may be left in place if they are outside the construction lines of cut and embankment areas. All stumps and roots shall be removed within the construction lines of cut and embankment areas except that when subgrade or embankment slope is more than one meter above the top of stumps or roots they may be left in the ground. In embankment areas, holes left after stumps are removed shall be backfilled with suitable material and compacted to a density of not less than 95 percent.

The Contractor shall not remove trees, shrubs, and other landscape features which are shown on the plans or designated by the Engineer to be preserved. These trees shall be trimmed

of overhanging branches to a height of 6 meters (20 feet) above the finished roadway. Branch stubs shall be painted with an asphalt base paint prepared for tree surgery.

All dead trees and those which die during the life of the contract, if they are along the edge of wooded areas remaining after clearing the site, shall be removed. Individual freestanding trees within the right of way but outside the limits of construction, which are dead or which have died during the life of the contract, shall be removed. Such removals shall be a part of the work included in Clearing Site.

In the performance of Clearing Site, the Contractor shall be responsible for the preservation of all public and private property, existing trees, plants, and other vegetation that is to remain within or adjacent to the highway and shall use every precaution necessary to prevent damaging or injuring them. He shall give special attention to the protection of the natural vegetation and other existing landscape features and surroundings. At locations adjacent to operations performed by motorized equipment, the Contractor shall erect and maintain a one meter (3 foot) fence around all trees and around areas containing vegetation which is to be preserved. The Contractor shall repair all injuries to bark, trunk, limbs, and roots of remaining plants by properly dressing, cutting, and painting, using only approved tree surgery methods, tools, and material, and shall replace to their original condition, by approved seeding methods and materials, all grass areas beyond the limits of construction which have been damaged by his work. The Contractor shall not remove, cut, injure or destroy trees or shrubs outside the limits of construction without authority of the Engineer.

When or where any direct or indirect damage or injury is done to public or private property by or on account of any act, omission, neglect, or misconduct on the part of the Contractor in the

execution of the work, such property shall be restored by the Contractor, at his expense, to a condition equal to that existing before such damage or injury was done, or he shall make good such damage or injury in such other manner as may be acceptable to the Engineer.

Roadside shrines shall be removed carefully and shall be reset at the exact locations approved by the owners and by the Engineer. Street and road signs, and government billboards shall be removed carefully and shall be reset at the locations designated by the public authorities having jurisdiction.

201.03 STRUCTURE REMOVAL

Existing bridges and other structures within the project which are to be removed by the Contractor shall be taken down and disposed of as may be directed by the Engineer. If needed for maintenance of traffic until new structures have been built, they shall not be removed until provisions for traffic, satisfactory to the Engineer, have been made. Cellars of houses, cesspools, and similar cavities shall be cleaned out.

Buildings shall be demolished or removed from the right-of-way by the Contractor if and where specifically provided for in the plans or Supplementary Specifications except as otherwise hereinafter provided. The work shall consist of complete demolition or removal of the buildings including but not limited to removal of equipment and fixtures, foundation walls above the ground, concrete floors (except in cellars), porches, steps, sheds, garages, barns and other outbuildings, concrete, masonry and timber structures, fences, hedges, gasoline pumps, island and tanks, and other miscellaneous structures appurtenant to the buildings shown to be demolished; disconnecting and terminating utility service facilities; cleaning out of cellars; refilling of cellars unless otherwise specified; breaking up concrete and masonry cellar floors for drainage; the removal and disposal

of materials and debris; final cleaning up of the site and other incidental work.

Buildings which are provided to be demolished or removed under the contract shall not be destroyed by burning but shall be torn down or moved to new locations outside the right-of-way of the project and outside other right-of-way proposed or contemplated for acquisition by the HA.

It shall be the responsibility of bidders to determine by their own inspection and investigation, the sizes and condition of buildings, their types of construction, and data concerning equipment and fixtures in the buildings, whether or not such information is shown or given in the plans, specifications or other contract documents, and to make such other investigation that may be necessary for a complete understanding of the work to be performed. Bids shall be based on the bidders' own findings.

The HA does not guarantee that the condition and contents of buildings will be the same at the time of starting work as they were when bidders inspected the site or prepared their bids; neither does the HA assume any responsibility for destruction or loss due to fire, theft, or vandalism that may occur prior to the time that the Contractor takes possession of the buildings for demolition. The Contractor shall accept buildings in the condition prevailing at the time they are made available to him for demolition.

The Contractor shall not start the demolition of any building before he has been notified by the Engineer that the building is available for demolition. He shall not start the demolition of any building that will damage, or jeopardize occupancy or use of, an attached or adjacent building that is proposed for demolition before such attached or adjacent building is declared by the Engineer to be available for demolition. The

demolition of buildings attached or adjacent to other buildings that are not to be demolished under the contract shall be conducted carefully to prevent damage to such other buildings and so that occupancy or use thereof is not jeopardized. Damage to attached or adjacent buildings due to violation of the foregoing provisions, or otherwise caused by the Contractor's work, shall be repaired and made good by the Contractor without payment.

All building materials, fixtures and equipment in, attached or belonging to, the buildings at the time they are declared available for demolition shall become the property of the Contractor unless otherwise provided in the Supplementary Specifications or in the right-of-way agreements with the owners.

All building materials, equipment, fixtures, and debris shall be removed from cellars of buildings demolished or removed by the Contractor. Concrete and masonry cellar floors shall be broken into pieces having areas of not more than 1 square meter with well defined cracks through the full depth of the floors, or holes of not less than 100 square cm area shall be made through the floors on approximately 3 meter centers, to provide vertical drainage. Cellar floors of wood shall be removed.

Materials and debris shall not be placed or stored within the limits of any existing street. The parking, loading, and operation of trucks on existing highways or streets shall be governed by existing laws, ordinances, and regulations.

In embankment areas, cellars of buildings demolished or removed by the Contractor shall be filled with suitable embankment material to be approved by the Engineer. Cellar fills shall be placed and compacted to a density of not less than 95 per cent by the Dry Fill, Density Control method.

Wherever necessary for protection of the public or where required by National or local laws, regulations or ordinances, the Contractor shall construct and maintain adequate sidewalk canopies abutting the buildings to be demolished and substantial barricades or fences closing off open cellars.

Prior to the demolition of buildings, or other installations to be demolished under this contract, the Contractor shall exterminate rats therein.

This extermination shall consist of the phases:

(1) Initial. This phase shall start immediately after execution of the contract where and as directed. All foods edible by rodents shall be removed from the buildings and surroundings by the Contractor, and then a commercially produced toxic material containing red squill or norbormide shall be placed in all structures to be demolished in such places as to attract the greatest possible number of rodents. The toxic material shall be used in accordance with the producers' instructions.

(2) Maintenance. One week (more or less, as directed) after the initial phase, the Contractor shall start a program of maintenance to rid the structures and adjacent areas within the limits of this contract of any remaining rodents or their carcasses and to prevent their migration to other adjacent areas. The toxic material shall consist of anticoagulents such as marfarin,. pival, diphacinone, PNP, or fumarin as A. 2-1/2 percent mixture with a suitable cereal for treatment of structures, and in torpedo form for the treatment of all adjacent areas wthin the limits of this contract, such as vacant lots and alleys.

All visible carcasses of rodents shall be removed and disposed of satisfactorily.

The toxic bait, shall be renewed semi-monthly, if so directed by the Engineer, throughout said maintenance period until the structures have been demolished and the cellars have been filled to the extent required.

Prior to the demolition of any building, the Contractor shall provide for the disconnection and termination of all water, sewer, electric, and telephone service facilities that are connected to the building, in conformance with the requirements of municipalities and utility companies owning or controlling them. The Contractor shall notify the municipalities and utility companies of the time any such disconnection may need be made and he shall perform the work according to their standard practices and requirements and under their supervision, or arrange for its performance by their forces. The cost of any and all such utility work, including charges, if any, which may be made by the municipalities and utility companies, shall be borne by the Contractor and shall be included in the prices bid for the various demolition items.

Prior to acceptance of the project, all materials and debris accumulated from demolition of buildings and from other work in connection therewith shall be removed from the site of the project and shall be disposed of by the Contractor as specified in Section 201.04. The ground surface shall be graded, if necessary, to eliminate water pockets and the entire site of the project shall be cleaned up and left in a condition satisfactory to the Engineer. If cellars are not required to be filled under the contract, barricades or fences that have been erected adjacent thereto shall be left in place for the protection of the public, unless the Engineer orders their removal.

201.04 DISPOSAL OF MATERIAL

Unsuitable materials accumulated by clearing, grubbing,

removal of bridges and other structures, and cleaning out as above described shall be disposed of by the Contractor at sites to be provided by him outside the limits of the highway, in a manner satisfactory to the Engineer. Material suitable for embankment shall be used for that purpose if needed. Wood, trees, and brush cleared from the site may be burned within the limits of the right-of-way if approved by the Engineer, and in conformance with National and local laws and regulations, at such places and times, and in such manner, that adjacent forests, and vegetation which is to be preserved, shall not be damaged by fire.

Timber that the Engineer decides is large enough to have commercial value shall remain the property of the HA. The Contractor shall trim limbs and tops and shall stack the logs along the roadway in sites designated by the Engineer.

Concrete pavement, sidewalks, curbs, gutters, and other mass concrete designated for removal shall be :

Broken into pieces and used for rip-rap on the project where designated on the plans, or ;

Broken into pieces of approximately 1/4 cubic meter in volume and stockpiles at designated locations for use by the HA.

Railroad ballast, gravel, and flexible paving materials shall be removed from the site and stockpiled at designated locations for use by the HA.

201.05 METHOD OF MEASUREMENT

(1) No measurement will be made of the area within the contract where Clearing Site is to be carried out unless the area is changed from the limits shown on the plans. In such a case, the increase or decrease in area will be measured in square meters.

(2) If structures to be demolished are to be paid for separately, such information will be included in the Plans and Specifications. In such a case, the measure of structures to be demolished shall be the total count of structures so designated and actually demolished.

201.06 BASIS OF PAYMENT

(1) Clearing Site will be paid for at the lump sum bid in the proposal, provided there is no change in the designated area. This lump sum shall include payment for all work described in sections 201.01 to 201.04. This work will include demolition of structures unless the provisions of section 201.05 (2) apply. If the designated area for Clearing Site is changed, the lump sum bid will be increased or decreased proportionally with the increase or decrease of area as measured in 201.05.

(2) If demolished structures are listed for separate payment, they will be paid for at the lump sums bid in the proposal for the various structures actually demolished.

(3) If the item Clearing Site is not scheduled in the Proposal, the cost thereof shall be included in the prices bid for other items scheduled therein.

SECTION 202 ROADWAY EXCAVATION

202.01 DESCRIPTION

Roadway excavation shall consist of the excavation and removal of all earth, rock, boulders, brick, stone and concrete masonry, small underground structures, and other materials encountered of whatever nature, required for the construction of roadways and their appurtenances. Roadway excavation shall also consist of the transportation of the excavated materials; the construction of embankments with the materials excavated; the disposal of unsuitable material and surplus material; the trimming and shaping of embankment and cut slopes, and the fine grading of embankment and cut surfaces to prepare the subgrade for roadway base and pavement.

202.02 CLASSIFICATIONS

(1) Roadway excavation may be provided for in the contract as Unclassified Excavation or, on a classified basis, as Earth Excavation and Rock Excavation.

(2) Unclassified Excavation shall consist of the removal of earth, rock, and all other materials encountered, of whatever nature.

(3) Earth Excavation shall consist of the removal of all materials encountered except rock as defined below.

(4) Rock Excavation shall include only such rock and hard packed material that cannot be removed by a power shovel of one cubic-meter capacity, in good condition and properly operated, without continuous drilling and blasting. Rock Excavation shall also include boulders and masses of masonry more than 0.5 cubic meter (0.6 cu yd) in volume.

202.03 METHODS OF CONSTRUCTION

Before grading work is started, the vegetation and under-

lying topsoil within excavation and embankment areas shall be stripped off to a depth of not less than 10 and not more than 15 centimeters below the existing ground surface, where shown on the plans or directed by the Engineer. Stripped material which is or may be made suitable for use as topsoil shall be stored and used therefor as needed. Stripped topsoil in excess of the quantity required for the project topsoil shall be stored at locations specified or shown on the plans, for future use by the HA. Topsoil shall not be stored in areas where it will interefere with surface drainage or with the conservation of trees, shrubs, and other vegetation scheduled to remain.

Roadway excavation shall be carried to the lines, grades, and slopes as shown on the plans.

Whether the excavation is classified or unclassified, rock and boulders shall be excavated to the subbase subgrade (or to bottom limits shown on the plans if a subbase course is not provided for) between lateral limits 0.5 meter (1 $\frac{1}{2}$ feet) outside the shoulders or front face of curbs, and to the neat bottom lines of excavation shown on the plans in median, island, sidewalk and berm areas. Rock shall be excavated and finished to fairly uniform slopes, parallel to the prescribed slope lines shown on the plans. No point of the rock shall be more than 0.5 meter (1 $\frac{1}{2}$ feet) inside or outside such prescribed slope lines. All pieces of rock outside the slope surfaces as excavated which have been loosened, or may become loose in the opinion of the Engineer, shall be removed.

Any space created by rock excavation in pavement, shoulder, and curb areas, below the prescribed bottom limit of excavation, shall be backfilled with the specified subbase material when a subbase course is provided for in the contract, or with a granular material when a subbase

course is not provided for. In other areas, any space which may be excavated below the prescribed limits of rock excavation shall be backfilled with material as specified in the Supplementary Specifications.

Cellar walls and other foundations shall be removed to a depth of not less than 0.5 meter below the proposed pavement subgrade. Earth slopes, shoulders, and other formed surfaces shall have a neat finish. When permission is given to widen an excavation to obtain additional embankment material, the slopes and other surfaces of the widened work shall be neatly finished to the lines prescribed by the Engineer. They shall be topsoiled and seeded, if and as directed, without additional compensation. Roadway excavation shall be carried out so that the subgrade throughout the work is kept properly drained.

Unless otherwise prescribed in the Supplementary Specifications, all excavation material, including rock, that is not required for ordinary backfill for structures, shall be placed in the embankment as defined in Section 203, insofar as space as available. Excavation material in excess of these requirements, and all unsuitable materials, shall be disposed of by the Contractor outside the limits of the project at places to be provided by him, except as otherwise hereinafter provided for excess rock disposal within the project limits. Excavation material suitable and needed for embankment or for backfill for structures, that is used for other purposes, or that is wasted, shall be replaced with the specified embankment material, at the Contractor's expense. If the Supplementary Specifications prescribe that a portion or portions of the excavation material be used for purposes other than embankment, any of such excavation material that is wasted or used for purposes other than prescribed shall be replaced at the Contractor's expense. This material, used for replacing excavated material shall conform to the

requirements specified for the purpose for which the wasted or misused material was intended.

Unstable or unsuitable material encountered at the bottom limits of roadway excavation shall be removed within the limits of the proposed pavement and shoulders or within such other limits as may be directed by the Engineer. The excavated areas shall be backfilled with suitable, approved material obtained from roadway excavation or borrow areas, or with subbase material, as directed. The backfill shall be placed and compacted as specified for embankment, or as specified for subbase if this is used. The unstable or unsuitable material removed shall be excavated and paid for as Roadway Excavation, Earth, or Unclassified, whichever is scheduled in the Proposal.

Rock shall be excavated and used in the embankment whenever possible. The work of excavation and embankment shall be arranged so that all rock, or the maximum amount thereof, will be used in the embankment in accordance with the requirements for embankment as specified in Section 204. If the Contractor fails to reserve space for the disposal of rock in the embankment, and additional borrow is necessary on that account, it shall be furnished and placed by the Contractor without compensation.

In the disposal of rock in embankments, priority shall be given to its use in the deeper embankments. If necessary, rock shall then be placed in progressively shallower embankments except that it shall not be placed within 0.5 meter (1 $\frac{1}{2}$ feet) of the proposed or future pavement subgrade. If there is rock in excess of that which can be disposed of, as specified above, within the normal lateral limits of embankment, it shall be used to widen embankments within the project limits, or deposited along slopes adjacent to streams for slope protection,

as the Engineer directs. If no use is specified for surplus rock, it shall be disposed of as hereinbefore provided for the disposal of excess excavation.

When separate payment is to be made for rock excavation, the Contractor shall remove the earth cover in advance of the rock so that proper measurements of its surface may be taken. The Contractor shall keep the Engineer informed of the exposure of the rock surface for measurement. Rock removed prior to such measurements will be measured and paid for as earth.

The Contractor shall make his own arrangement with owners of abutting property regarding permission to store topsoil, to dispose of excess and unsuitable excavation materials, to place embankment and other materials, and to excavate beyond the limits of the right-of-way and of slope rights acquired for the project. Where any such materials or excavation remain beyond the prescribed slope lines and outside of the right-of-way and slope easement areas acquired by the HA when the project is otherwise completed, the Contractor shall obtain and deliver to the Engineer written releases from the owners of the properties on whose land such materials or excavation remain. The releases shall be in a form satisfactory to the Engineer and shall protect the HA against claims or actions of the owner with respect to the presence of such materials or excavation.

Existing vegetation that is to be preserved within the highway right-of-way shall be protected against damage from the runoff and spreading of topsoil and excavation materials that may be stored or disposed of adjacent to the highway right-of-way.

202.04 BLASTING OPERATIONS

(1) GENERAL

All necessary precautions in drilling and blasting operations shall be exercised in order to preserve the rock remaining in the finished slope in a natural, undamaged condition.

Prior to drilling and blasting in any area where there is rock, the Contractor shall remove any existing overburden to the top surface of the rock.

The methods of drilling and blasting as defined below shall be employed on this project unless otherwise directed by the Engineer at the locations shown on the Plans or as directed by the Engineer.

(2) PRESPLITTING ROCK BACK SLOPES

(a) DESCRIPTION

Where presplitting is called for in rock cuts, the following specification shall apply. Presplitting is the construction of a smooth plane in rock by controlled blasting with correctly timed explosives chosen for the particular rock and correctly placed in properly aligned and suitably spaced drill holes. Presplitting should cause a continuous fracture between these drill holes.

The primary objective of presplitting rock backslopes is to produce a smooth face on the rock backslopes, that will reasonably conform to the design lines and grade and is reasonably free of loose rock. The Contractor shall conduct his operations to achieve the stated objectives as nearly as possible without unduly disturbing the rock outside the excavated prism.

(b) CONSTRUCTION METHODS

(1) DRILLING

The holes for presplitting shall be drilled at intervals of not more than one meter (3 feet) center to center. An interval of from one-half to one meter ($1\frac{1}{2}$ feet to 3 feet) is generally recommended for trial spacing. The holes shall be from 6 centimeters to 8 centimeters ($2\frac{1}{2}$ inches to 3 inches) in diameter. All holes in any cut shall have the same diameter unless otherwise approved by the Engineer. The Contractor shall vary the spacing of the holes to provide a reasonably smooth face in the material encountered. The hole spacing interval for each cut shall be subject to approval of the Engineer before work is begun.

Hole depth shall be limited to a depth within which accurate drilling can be accomplished. The maximum drilling depth shall be limited generally to the depth of the roadway grade elevation unless this depth exceeds approximately 8 meters (25 feet). The lift depth shall be controlled to prevent hole wander in excess of 20 centimeters (9 inches) from neat lines. Cut sections with depths in excess of 8 meters (25 feet) may require presplitting in two or more lifts. The cut depth to each presplit lift will be determined by the Engineer.

Presplitting accomplished in two or more lifts shall have a 30 centimeter (1 foot) offset provided on each lift before presplitting the next lift. The proper adjustments in equipment or methods shall be made to insure that the faces of backslopes are parallel, when more than two lifts are required.

The primary blasting holes nearest the presplit face shall at no point be closer than one meter (3 feet) from the presplit face. This distance may be widened at the direction of the Engineer, to prevent overbreakage. Primary blasting holes shall be loaded in a manner and quantity to minimize overbreakage.

(2) BLASTING

The explosive used in presplitting shall be used with care. The quantity and manner of use shall be such that overbreak is negligible, that seams in the backslope rock are not opened, and that the backslope rock is not fractured excessively.

The explosive used shall be from 1/10 to one kilogram per meter (1/10 to 3/4 of a pound per foot) of 40 percent extra strength dynamite or other equivalent explosive charge that shall produce equally satisfactory results. The recommended charge is 0.33 kilogram per meter ($\frac{1}{4}$)pound per foot) of 40 percent extra strength dynamite. The charges shall be prepared by taping fractional portions of standard explosive cartridges to a length of detonating fuse (Primacord) or by some other approved method which creates equivalent explosive density. Fuse length shall be as long as the drill hole is deep. A detonator of appropriate suitable strength shall be used with each explosive.

Charges, attached to a detonating cord, shall be uniformly spaced and evenly distributed throughout the length of the hole. A charge of no more than one kilogram (2 pounds) of dynamite shall be concentrated at the bottom of each hole; 0.5 kilogram (one pound) is the recommended load. The top charges shall be not less than 0.75 meter ($2\frac{1}{2}$ feet) or more than one

meter (3 feet) from the surface. The charges in each hole shall be spaced at intervals of approximately 30 centimeters (12 inches). The charges in adjacent holes shall be staggered vertically. The Engineer may require a change in the size and spacing of the individual charges in each cut. A reduction of the charge, up to 50 percent, may be made in the upper portion of the hole to control overbreak near the top of a slope if overbreak has occurred in previous blasts.

Stemming material shall be dry. It shall pass a 10 millimeter (3/8 inch) standard sieve and may be clean stone chips, sand, or drill cuttings. Stemming shall be required the full depth of holes in badly fractured rock. Stemming shall be required in the top one meter (3 feet) only of holes drilled in sound unfractured rock.

The presplitting holes shall be shot at least 100 milliseconds prior to any other blasting within 15 meters (50 feet) of the longitudinal limits within which all presplitting is to be accomplished. Presplitting holes shall be shot within 1 day after they have been loaded. No charged holes shall be left unattended.

Blasting shall be done in such a manner that the presplit backslope does not vary more than 20 centimeters (9 inches) from the line of drill holes. When blasting in badly broken rock, rock with excessively large seams, or rock where unavoidable irregularities may occur, it may be necessary that holes for presplitting be drilled and fired before primary holes are drilled.

(3) PRIMARY BLASTING

Primary or core blasting shall be performed between presplit slopes. Primary or core blasting shall be

accomplished with suitable explosives and bore hole size and spacing to produce the required degree of fragmentation acceptable to the Engineer. Milli-second delay detonators arranged as indicated on the Plans shall be used to detonate all primary or core blast holes, except that the first charge in each round may be instantaneous. The first row of primary or core blast holes inside of the presplit slope shall be on a plane parallel to the plane of the presplitting slope holes. The clearance between primary or core blast holes and the presplit slopes shall be at least one meter (3 feet). Proposed variations in the delay pattern shall be submitted to the Engineer in writing with suitable diagrams showing the proposed delay pattern at least 48 hours prior to the blasting operation. No variation in the delay pattern as shown in the typical details may be detonated until the Contractor is in receipt of the Engineer's written approval of the proposed variation.

202.05 METHOD OF MEASUREMENT

Roadway Excavation will be measured in its original position by the cross section method, and the volumes of earth and rock will be computed by averaging end areas. The quantities measured for payment will be the volumes actually removed within the neat lines of excavation as shown on the Plans or as directed by the Engineer, except as follows:

The quantity of Stripping Topsoil measured for payment will be the area stripped in accordance with the Plans or as directed by the Engineer, measured in square meters. Such stripping will not be measured as roadway excavation.

If rock is entirely removed to within 30 centimeters (1 foot) of the prescribed slope lines shown on the plans, measured

normal to such slope lines, as hereinabove specified in Section 202.03, or if it be removed to a greater width without written order of the Engineer, the lateral payment limits of rock excavation shall be the slope lines as shown on the Plans.

If rock is entirely removed to the subgrade of the subbase, or to other prescribed bottom limits of excavation, the bottom payment limit or limits of rock excavation shall be the subbase subgrade or other prescribed bottom limits of excavation, respectively.

If the plans indicate an earth overburden on the rock, the earth shall be excavated to the required slope lines including an additional 30 cm (1 ft) in width from the top of the rock cut, and this additional material shall be measured for payment as Roadway Excavation, Earth.

Any material outside the slopes, as excavated, which has been shattered or loosened, or which may become loose, in the opinion of the Engineer, because of blasting or other operations of the Contractor, shall be removed without further compensation.

Re-excavation due to slips, slides and other causes will be measured for payment only when, in the opinion of the Engineer, such slips or slides were not the fault of the Contractor.

If the excavation is unclassified, the volume measured for payment shall be equal to the total combined volume of earth and rock, measured and determined as above specified except that the earth and rock will not be measured and computed separately. Where rock is encountered and the excavation is unclassified, measurement for payment for unclassified excavation will be made within the payment limits specified for earth and rock payment.

When roadway excavation is provided for as earth excavation only, and rock is encountered but is not scheduled in the

Proposal, payment for the rock will be made at 5 times the unit price bid for the item Roadway Excavation, Earth.

202.06 BASIS OF PAYMENT

Payment for Roadway Excavation, Earth, Roadway Excavation, Rock, and Roadway Excavation, Unclassified, as and when scheduled, will be made for the quantities of each as above determined, measured in cubic meters, at the prices bid in the Proposal, which prices shall include the cost of excavation of the materials encountered including all costs incidental to blasting and presplitting removal of small structures; transportation of the excavated materials, the construction of embankment with the materials excavated, refilling cellars, backfilling in rock excavation as hereinafter specified ; the shaping and dressing of slopes, shoulders, islands, and other surface, the disposal of all excess and unsuitable materials, cleaning pavements and for all labor, equipment, and incidental items necessary to complete the work.

The unit price bid for Unclassified Excavation, or for Rock Excavation, if classified, also shall include the cost of backfill in rock excavation areas below the unclassified or rock excavation limits with materials as specified in Section 204. Backfill in rock excavation, above the prescribed rock or unclassified excavation limits, made with borrow excavation or subbase material will be paid for at the respective unit prices bid in the Proposal.

Payment for Stripping will be made for the quantity as above determined, measured in square meters, at the price per square meter bid in the Proposal, which price shall include the cost of stripping and storing the stripped material, disposal of excess and unsuitable material, all labor, equipment and incidental items necessary to complete the work.

SECTION 203 EMBANKMENT

203.01 EMBANKMENT CONSTRUCTION

(1) GENERAL

Embankment construction shall consist of constructing roadway embankments, with approved materials, including preparation of the areas upon which they are to be placed. Preparation of areas shall include the placing and compacting of embankment material in roadway areas where unsuitable material has been removed, and the placing and compacting of embankment material in holes, pits, and other depressions within the roadway area. Suitable material shall be secured from designated roadway, trench, structure, channel and borrow excavation in conformity with the lines and grades and locations shown on the Plans and as directed.

Stumps, trees, logs, rubbish, vegetation, or other unsuitable materials shall not be placed in embankments. Sod mixed with surface soil containing large amounts of humus or other organic materials shall be spread over the embankment slopes or incorporated in the embankments outside of the shoulder lines. Pockets of rock or muck will not be permitted.

Compaction of embankments, including backfilling and preparation of embankment foundation areas, shall meet the requirements of Section 203.05, unless otherwise specified.

203.02 MATERIALS

(1) Materials for embankment shall be Soil Aggregate obtained from roadway, trench, structure, or channel excavation as defined in Sections 202, 204, 205, 206 or obtained from borrow pits as defined in Section 207.

Materials from these sources shall meet the requirements of AASHO Designation M 145, and shall be defined according to the "Standard Definitions of Terms Relating to Subgrade, Soil-Aggregate, and Fill Material," AASHO M 146. The Engineer will determine the Group Classification that shall be used in the various parts of the embankment.

Where embankments are to be placed on soils having a relative compaction of less than ninety percent as determined by Test AASHO T 191, the ground surface shall be scarified, watered and compacted before placing embankment material until a relative compaction of at least ninety percent is reached in the upper 20 centimeters (8 inches) of the compacted soil. The width of the above treatment shall be at least the width of roadbed surface as a minimum, and more when directed by the Engineer. Should lightly compacted soils be encountered that extend to depths greater than 20 cm (8 in), the upper portion between the limits of fill shall be removed to the depth ordered by the Engineer, after which the ground surface shall be compacted until a relative compaction of ninety percent is reached in the upper 20 centimeters (8 inches). Material removed as provided above shall be placed in embankment directly from excavation or utilized as topsoil when directed by the Engineer. The material in the top 20 centimeters (8 inches) of subgrade in cuts shall be compacted to the same density as that in adjoining embankments.

Whenever a compacted road surface containing granular materials lies within one meter (3 ft) of the subgrade, the road surface shall be scarified to a depth of at least 20 centimeters (8 inches). This scarified material shall be recompacted.

(2) EARTH EMBANKMENT

Roadway embankment of earth material shall be placed in horizontal layers not exceeding 20 centimeters (8 inches) loose measurement, and shall be compacted as specified before the next layer is placed. Effective spreading equipment shall be used for each lift to obtain uniform thickness prior to compacting. As the compaction of each layer progresses, continuous leveling and grading will be required to assure uniform density. Water shall be added or removed, if necessary, in order to obtain the required density. Construction equipment shall be routed uniformly over the entire surface of each layer.

3) ROCK EMBANKMENT

When the excavated material contains more than twenty-five percent by volume of rock larger than 30 centimeters (one foot) in the greatest dimension, it shall be placed in the embankment in layers of sufficient depth to contain the maximum size rock present in the material, provided, however, that in no case shall the thickness of layers before compaction exceed 60 cm (24 in). The placing of individual rocks and boulders greater than 60 centimeters (2 feet) in diameter will be permitted provided that, when placed, they do not exceed 120 centimeters (4 feet) in vertical height and provided they are carefully distributed with the clearance between adjacent fragments sufficient to provide adequate space for filling and compacting in horizontal layers.

Under all conditions, the upper portions of the embankment, for a depth of at least 60 centimeters (2 feet), shall be composed of suitable material smoothed and placed in layers not exceeding 20 centimeters (8 inches) in loose thickness and compacted as specified for embankments.

Rock encountered in excavations shall be worked to the stream face of embankments, when these embankments are adjacent to streams or channels. The cost of this work shall be incidental to the unit price bid for unclassified excavation or for rock excavation.

(4) EMBANKMENT OVER SWAMPY AREAS

When embankment is to be constructed across swampy ground that will not support the weight of hauling equipment, the lower part of the fill shall, if approved by the Engineer, be constructed by dumping successive loads of material in uniformly distributed layers of a thickness not greater than necessary to support the hauling equipment while placing subsequent layers in the previously specified manner.

(5) UNSUITABLE OR EXCESS MATERIAL

All excess or unsuitable excavated material, including rock and boulders, that cannot be used in embankments may be placed in the side slopes of the nearest fill in a satisfactory manner and shall be placed so as to maintain a distinct shoulder line by keeping all such waste material the specified distance below the finished shoulder elevation. In case it is impossible to dispose of all such material in the manner described, the remainder shall be disposed of as directed by the Engineer.

203.03 MOISTURE AND DENSITY REQUIREMENTS

Each layer of roadbed material shall be compacted, with the proper use of water, until the in-place density of the material being compacted is not less than ninety five (95) percent of the maximum density established for the material being compacted. Water required shall be sufficient to obtain optimum

moisture content plus or minus two percentage points, as determined by appropriate test methods.

203.04 EMBANKMENT AT STRUCTURES

Rocks, broken concrete, or other solid materials shall not be placed in embankment areas where piling is to be driven.

If embankment can be deposited on one side only of abutments, wing walls, piers or culvert headwalls, care shall be taken that the area immediately adjacent to the structure is not compacted to the extent that it will cause overturning of, or excessive pressure against, the structure. When noted on the plans, the fill adjacent to the abutment of a bridge shall not be placed higher than the bottom of the back wall of the abutment until the superstructure is in place.

Embankment and backfill shall be placed in layers of not more than 20 centimeters (8 inches) loose thickness and compacted adjacent to structures, around columns and similar structural supports, on both sides of concrete walls, box-type structures and similar structures. Backfill material placed within the excavation limits shall be compacted. Backfill material placed above the excavation limits or ground line shall extend at least 3 meters (10 feet) from the structure or structural support before compacting. Structures or structural members that have moved or have become distorted as a result of placing embankment shall be adjusted, repaired and, restored by the Contractor at no cost to the HA.

When embankment is placed prior to completion of a structure, the embankment shall be stopped 100 meters (300 feet) from the nearest point of the excavation limits. When the structure is complete, backfill and embankment shall be completed in accordance with the provisions of this section.

When footings for bridge structures are to be placed on

embankment above the ground level, embankment shall be placed and compacted up to the level of the bottom of the footing. The placing of embankment may be continued but shall be discontinued at a point 100 meters (300 feet) from the nearest point of the footing.

203.05 CONSTRUCTION METHODS

(1) PREPARATION OF EMBANKMENT FOUNDATIONS

When embankment is to be placed and compacted on hillsides, or when new embankment is to be compacted against existing embankments, or when embankment is built 1/2 width at a time, the slopes that are 4 : 1 or steeper shall be continuously benched over those areas as the work is brought up in layers. Benching shall be of sufficient width to permit operations of placing compacting equipment.

Each bench shall be cut as close to the one below as the ground slope will permit. Acceptable material cut out of benches shall be incorporated into the new embankment. Where embankment is to be placed and compacted and end dumping is permitted, the slopes of the original ground or embankment shall be deeply plowed or cut into before starting end dumping. Where an embankment of less than 1.25 meters (4 feet) in thickness is to be made, all sod and vegetable matter shall be removed from the surface upon which the embankment is to be placed, and the cleared surface shall be completely broken up by plowing, scarifying or stepping to a minimum depth of 15 centimeters (6 inches). This area shall then be recompacted. Where the embankment to be placed is greater than 1.25 meters (4 feet) in thickness, the removal of sod is not required.

Material tests used to establish the maximum density values

will be performed in accordance with Test Method AASHO T 99, "A" or "C." In-place density and moisture testing will be performed in accordance with applicable Test Method AASHO T 191. The percent compaction will be determined after making proper adjustments, when necessary, for oversize material.

Each layer of roadbed material that cannot be properly tested by the above test methods shall be compacted with compaction equipment in addition to compaction by hauling and spreading equipment. Compaction equipment for rocky material that cannot be tested shall normally be grid rollers, pneumatic-tired rollers, vibrating rollers, vibrating compactors, or self-propelled tamping rollers. Sheepsfoot rollers shall not be used unless specifically directed. Water shall be used where directed.

203.06 FINE GRADING-SUBGRADE

Fine Grading-Subgrade shall consist of the final grading of the embankment to bring the subgrade of the subbase course to conformity with required grade, alignment, and cross section shown on the Plans or ordered by the Engineer. After all drainage structures have been installed and the subgrade has been shaped correctly, it shall be brought to a firm, unyielding surface compacted to attain at least 95 percent of the maximum dry density. This density shall be determined by the Standard Method of Test for the Moisture-Density Relations of Soils, AASHO T 99, Method C.

A power grader or other approved equipment shall be used during the compaction to obtain the specified cross section.

Areas of soft, yielding, or other unsuitable material that will not compact readily shall be removed and replaced with a

suitable material and properly compacted as directed by the Engineer.

All loose rock or boulders encountered at subgrade in the earth excavation shall be removed or broken off to a depth not less than 30 cm (12 inches) below the subgrade.

In excavation areas, the ground shall not be excavated or disturbed below the subgrade except as shown on the Plans or required in the Special Provisions, or as ordered by the Engineer. All ditches and drains shall be constructed so they will effectively drain the highway before the placement of any subbase or surface course material. If the placement of subbase material is delayed by the Contractor or if subbase and paving are included in a later contract, the Contractor shall make drainage openings into the permanent drainage structures at a point below inlet level in order to drain the subgrade. These openings shall be fitted with straw filters to keep silt from washing into the drainage system. Any silt washed into the drainage system shall be removed at no cost to the HA. Filters shall be changed or cleaned when the Engineer directs. This maintenance work shall be continued until paving is placed or until the project is accepted. If pavement placement is part of the contract, the openings shall be properly sealed at the time of placing subbase. The making of openings, maintaining them, cleaning silt spills, and repairing the openings will be incidental to Fine Grading-Subgrade. In handling materials, tools and equipment, the Contractor shall protect the subgrade from damage. In no case shall vehicles be allowed to travel in a single track and form ruts. If ruts are formed, the subgrade shall be reshaped and compacted, and any pockets of clay, sand, or soft material that may have been left in the subgrade shall be removed and replaced with approved material and properly compacted at the Contractor's expense. The subgrade shall be kept in such condition that it will drain. Subbase, base,

or surface material shall not be deposited on the subgrade until the subgrade has been checked and approved by the Engineer. After the subgrade has been approved, hauling shall not be done nor equipment moved over the subgrade which will distort the cross section.

A tolerance of 1 centimeter ($\frac{1}{2}$ inch) above or below the finished subgrade will be allowed provided that this tolerance above or below subgrade is not maintained for a distance longer than 15 meters (50 feet) and that the required cross section is maintained.

203.07 METHOD OF MEASUREMENT

No measurements need be made, for payment purposes, of embankment from the various kinds of excavation. However the Engineer may make measurements for record purposes and, if borrow is measured for payment in the embankment in accordance with Section 207.04 (2), the Engineer will measure all embankment in accordance with the Provision of Section 207.04 (2). The Contractor shall grant the Engineer all necessary assistance in making such measurements.

The area to be measured for payment under Fine Grading–Subgrade will be measured in square meters from the plans and will be measured between the lines of subbase as shown on the plans.

Material excavated for forming benches, as defined in Section 203.05, 2 meters (6 feet) or less in width, will not be measured for payment.

Material excavated for forming benches greater than 2 meters (6 feet) in width will be measured for payment in cubic meters.

203.08 BASIS OF PAYMENT

There will be no separate payment for embankment. However, the Engineer may specify that borrow placed in the embankment be paid for according to volume measurement of the embankment. In such a case, payment will be in accordance with the provision of Section 207.04 (2). All costs of transporting, placing, compacting embankment, and all other work incidental thereto shall be included in the costs for Unclassified Excavations; Roadway Excavation, Earth; Roadway Excavation, Rock; Channel and Ditch Excavation; Foundation Excavation; Drainage Structure Excavation; Borrow Excavation —Owner Source; and Borrow Excavation —Contractor Source. Fine Grading-Subgrade will be paid for at the unit price bid per square meter, which price will cover all work necessary to fine grade the subgrade in accordance with the provisions of this section.

Excavation for forming benches, as defined in Section 203.05, greater than 2 meters (6 feet) in width will be paid for at the contract unit price per cubic meter for Roadway Excavation, Unclassified, or Roadway Excavation, Earth.

SECTION 204 STRUCTURE EXCAVATION

204.00 DESCRIPTION

Structure Excavation shall mean all excavation necessary for the construction of bridges and incidental structures. The provisions of Section 501 shall apply within the limits of Structure Excavation as shown on the Plans

204.01 DISPOSAL OF MATERIAL

Material from Structure Excavation meeting the requirements of 203.02 (1) and not needed for backfill around the structures, shall be used for embankment. Unsuitable material shall be disposed of as specified in Section 203.02 (5).

SECTION 205 SUBSURFACE STRUCTURE EXCAVATION

205.01 DESCRIPTION

Subsurface Structure Excavation shall include excavation for drain pipes and culverts, sewers, water pipe, gas pipe, electric cable, electric conduits, manholes, inlets, catch basins, and similar structures.

Rock in the excavation for subsurface structures is defined as boulders more than 0.5 cubic meter in volume, and rock in ledge formation which, in the opinion of the Engineer, cannot be removed by means of heavy equipment ordinarily used for trench excavation without blasting.

205.02 METHODS OF CONSTRUCTION

Before laying pipes of any connected drainage system, or any pipe line or culvert, the Contractor shall ascertain the location and grade of utility pipes and other subsurface structures which may interfere with such construction. Test pits shall be excavated wherever necessary to obtain the required information, subject to the approval of the Engineer.

Subsurface structure excavation shall be made in open cut unless otherwise specified, and shall be wide and deep enough to permit the installation of the subsurface structure in a workmanlike manner. Trenches and openings for subsurface structures located within the proposed or existing pavement, shoulder, and sidewalk areas shall be excavated with vertical sides, except that the sides may be sloped above the bottom of proposed subbase or other prepared foundation course. Trenches for pipes shall be not less than 30 centimeters (1 foot) wider at the bottom than the outside diameter of the pipe and, when conditions permit, shall be opened for a distance of not more than 100 meters (300 feet) in advance of the laying of the pipe. The excavation shall be properly shored, braced and sheathed

as conditions may warrant. If close to existing pavement, sidewalks, curb, pipes, railroads, or structures of any kind, the excavation shall be secured by sheet piling or other shoring system acceptable to the Engineer, so that such facilities and structures will be adequately protected. Suitable trench crossings shall be provided andmaintainedwhere necessary.

When the material at the bottom of a trench or other subsurface structure excavation is soft or otherwise unsuitable, it shall be removed to such a depth as the Engineer may require and the space backfilled with suitable granular material obtained from the project excavation, or from borrow excavation if it be not available within the project. Rock and boulders in the excavation for all pipes shall be removed within 15cm (6 inches) of the outside surface of the barrel of the pipe. All earth, rock, and other material in the excavation for concrete and clay pipes shall be removed within 15 centimeters (6 inches) of the outside surface of the barrel of the pipes at the bottom and sides. The space excavated below the pipe grade shall be filled with suitable bedding material, either class A or class B, as called for in Section 601.04. Class B bedding material shall be compacted with mechanical tampers or vibratory compactors so that it is uniformly dense and firm. The bottom of the trenches prepared with class B bedding above shall conform to the grades of the bottom of pipes or structures and shall be recessed for pipe bells.

Backfill to a height of 60 centimeters (2 feet) above the top of pipes and culverts, except underdrains, shall be made with earth, free from stones or rock fragments of a size larger than 5cm (2 in). This backfill shall be placed in layers not more than 15cm (6 inches) thick, and each layer shall be compacted with approved mechanical tampers.

All backfill more than 60 centimeters (2 feet) above the

top of pipes and culverts, except underdrains, shall be compacted as follows :

(1) By approved vibratory soil compactors, if the backfill material be mostly sand, or sand and gravel containing more than 12 percent by weight, of material that will pass the No. 200 sieve.

(2) By approved vibratory compactors or mechanical tampers if the material be mostly sand, or sand and gravel, containing not more than 12 percent, by weight, of material that will pass the No. 200 sieve.

(3) By approved mechanical tampers, if the backfill material is not mostly sand, or sand and gravel.

Backfill around inlets, manholes, and other subsurface structures shall be compacted by mechanical tampers.

In (1) and (2) above, approved mechanical tampers may be substituted for the vibratory soil compactors where the shoring and bracing of trenches or other special conditions make the use of vibratory compactors impracticable.

The special backfill in trenches for underdrains shall be compacted by approved vibratory soil compactors or mechanical tampers except that it need not be compacted if the underdrains are located outside of the areas of proposed or future pavement, improved shoulders, or improved sidewalks. Earth backfill above the special backfill material shall be compacted as specified in (1), (2) and (3) above.

Where mechanical tampers or vibratory soil compactors are used in accordance with the foregoing provisions, the backfill shall be placed and compacted in layers not more than 15cm (6 inches), loose measurement.

Shoring, bracing, and sheathing shall be withdrawn as the filling proceeds, unless otherwise specified or approved by the

Engineer. Surplus material from subsurface structure excavation that is suitable for embankment shall be used as specified for the use of roadway for embankment, and all unsuitable materials shall be disposed of by the Contractor at places to be provided by him outside the limits of the project.

205.03 METHOD OF MEASUREMENT

No specific payment will be made for subsurface structure excavation and backfill, and the cost thereof shall be included in the prices bid for the subsurface structures for which the excavations are made, except as otherwise hereinafter provided.

Rock and boulders as defined in Section 205.02 will be measured for payment as Rock Excavation, Subsurface Structures, when encountered Measurement for rock in mass formation will extend 30cm (1 foot) beyond the nominal barrel diameter of pipes and outmost neat lines of other structures at the bottom and sides, except that, in underdrain trenches, measurement will extend 15cm (6 inches) beyond the prescribed limits of the special backfill material at the sides and bottom if such backfill limits be more than 15cm (6 inches) beyond the outside barrel diameter of the pipes. For boulders exceeding 1/2 cubic meter in volume, measurement will be made of the actual volume excavated within the payment limits prescribed above for rock in mass formation.

Earth excavation below the proposed grades of pipes or subsurface structures shown on the Plans caused by changes in grades of such pipes and structures, or made upon order of the Engineer to remove unsuitable material, will be measured for payment as Earth Excavation, Subsurface Structures, Additional Depth, for the quantity excavated within vertical planes located 30cm (1 foot) outside the external surface of the barrels of pipes and 15cm (6 inches) outside the outmost neat lines of other structures; except that for pipes of less than

30cm (12 inches) measurement for payment will be based on a trench width of one meter (3 feet).

When subsurface structure excavation is within the lateral limits of roadway excavation or of any excavation which is paid for under other scheduled items, measurement for payment of rock excavation and boulders in the subsurface structure excavation, as hereinbefore specified, will apply only below the prescribed bottom limit of such roadway or other excavation unless, in the opinion of the Engineer, the subsurface structure excavation must be made before the roadway or other excavation.

205.04 BASIS OF PAYMENT

Payment for rock and boulders in excavation for subsurface structures, as above described, will be made for the quantity as above determined, measured in cubic meters at the price per cubic meter bid in the proposal, which price shall include excavation, backfilling, use or disposal of surplus material as specified, all labor, equipment and, all else necessary therefor and incidental thereto.

Payment for earth excavation below the proposed grades of pipes and subsurface structures, as above described, will be made for the quantities as above determined, measured in cubic meters at the price per cubic meter bid in the Proposal, which price shall include the cost of excavation and the use or disposal of surplus material as specified, backfilling except as otherwise hereinafter specified, pumping, sheathing, shoring and bracing below such proposed grades, all labor, equipment, and all else necessary therefor and incidental thereto.

Where backfill below the bottom of pipes or other subsurface structures is ordered by the Engineer to be made with granular or other selected material obtained from outside

the project, payment will be made for such material, measured in place in the trenches, within the payment limits prescribed for the trench excavation below the proposed grade, at the unit price bid for the item Borrow Excavation.

The foregoing provisions for quantity and payment for earth excavation and backfill below the proposed grade of pipes and other subsurface structures shall not apply: (1) to the excavation and backfill required for a depth of 15cm (6 inches) below the bottom of concrete and clay pipes; (2) to the special backfill and excavation therefor below underdrains; or (3) to the extra depth of excavation necessary for the extra depth of inlets and manholes paid for under separate scheduled items of the Proposal.

SECTION 206 CHANNEL AND DITCH EXCAVATION

206.01 DESCRIPTION

Channel excavation and ditch excavation shall consist of the excavation required for the construction of new water channels, and for deepening, widening, and relocating existing water channels.

The excavation of water channels is defined as channel excavation if the bottom width thereof is more than 2 meters (6 feet), and as ditch excavation if the bottom width is less than 2 meters (6 feet).

Channel excavation and ditch excavation shall be classified as earth and rock or shall be unclassified, as specified for Roadway Excavation. If classified, rock and earth in channel excavation shall be governed by the definitions thereof as specified for roadway excavation, earth and rock, in Section 202.02.

206.02 METHODS OF CONSTRUCTION

Water channels shall be constructed to the lines, grades, and cross sections, and at the locations shown on the Plans and the excavation shall be neatly sloped and finished. Suitable material excavated shall be used for embankment when needed for this purpose. Surplus material shall be disposed of by the Contractor at places to be provided by him. The Contractor shall obtain and submit to the Engineer written permission of the property owners for the temporary storage and final disposal of any excavation materials on private lands outside of the right-of-way or outside of easement areas acquired by the HA. Excavated material that may be disposed of adjacent to the channels shall be neatly graded and sloped to provide adequate drainage flow from the adjacent lands to the channels; and the sites shall be restored to a condition

satisfactory to the property owners and the Engineer. Prior to final acceptance of the project, the Contractor shall obtain and submit to the Engineer releases from all property owners, public and private, on whose land materials from channel excavation have been temporarily stored or permanently placed. The releases shall be in a form satisfactory to the HA, shall recite that the owner's land has been satisfactorily restored, and shall protect the HA against claims or other actions of the owners with respect to materials stored or disposed of on their lands.

206.03 METHOD OF MEASUREMENT

The quantities of Channel Excavation and of Ditch Excavation, in earth, for which payment will be made, will be the actual volumes measured in place, removed within the neat lines shown respectively therefor on the Plans or as directed by the Engineer.

When rock is encountered, payment will be made as Channel Excavation, Rock or Unclassified, and Ditch Excavation, Rock or Unclassified, as specified and scheduled, for the respective quantities thereof actually excavated within limits 30cm (1 foot) outside the above mentioned neat lines at the bottom and sides, measured normal thereto.

206.04 BASIS OF PAYMENT

Payment for Channel Excavation and for Ditch Excavation will be made for the quantities of each as determined, measured in cubic meters at the respective unit prices bid in the Proposal, which prices shall include the costs of excavation, placing and compacting the material in embankment, or disposal of the material as specified, shaping and dressing slopes and other surfaces, final restoration of the sites adjacent to the water channels, necessary permits and releases, all labor and equipment, and all else necessary therefor and incidental thereto.

SECTION 207 BORROW EXCAVATION

207.01 DESCRIPTION

Borrow Excavation-Owner Source shall include clearing borrow site, construction and maintenance of access roads, excavating, transporting, placing, compacting, and fine grading material required for embankment in excess of that obtained from Roadway and other Project Excavation. Borrow Excavation-Owner Source shall be obtained by widening cuts or by excavating from sources provided by the Engineer. The Contractor shall have no choice in selection of areas to be excavated. Borrow Excavation-Owner Source shall be excavated to the lines and grades established by the Engineer.

Borrow Excavation-Contractor Source shall include furnishing, placing, compacting, and fine-grading borrow material required for embankment in excess of that obtained from Roadway and other Project Excavation. Except that sources of Borrow Excavation-Contractor Source may not be located on land owned by the Government, the Contractor shall have complete freedom of choice in selection of areas to be excavated.

207.02 MATERIAL

Borrow excavation materials from either source shall conform to the requirements of Section 203.02. The Contractor shall guarantee to the Engineer complete access, at all times, to all sources of Borrow-Contractor Source so that the Engineer may make necessary cross-sections, take samples and perform in-place tests.

207.03 METHODS OF CONSTRUCTION

When the Contractor is performing work in connection with Borrow-Owner Source, he shall follow the provisions for

roadway excavation as stated in Section 202.03. When the Contractor is performing work in connection with Borrow-Contractor Source, his construction methods shall be under control of the Engineer when the borrow material arrives within the borders of HA control, whether on an existing highway or the project limits. However, the Contractor will, at all times, be subject to owner's, local, District, Province, or National regulations and the Engineer may refuse to accept material from a source if he determines that the Contractor is not complying with appropriate regulations in the conduct of his off-site work.

207.04 METHOD OF MEASUREMENT

Borrow Excavation will be measured by one of the following methods described in (1) and (2) below. The method chosen will be stated in the Supplementary Specifications or designated by the Engineer.

(1) MEASUREMENT IN BORROW PITS

(a) The amount of material taken as Borrow-Owner Source will be measured in cubic meters by the cross-section average-end method. When Borrow-Owner Source is taken from designated borrow pits, the amount measured will be the amount computed from pre-excavation and final sections with a reduction made for unsuitable material and surface stripping. When Borrow-Owner Source is taken from widened roadway cuts, the amount measured will be the difference between standard roadway excavation lines and the actual excavation lines made in accordance with the directions of the Engineer.

(b) The amount of material taken as Borrow-Contractor Source will be measured in cubic meters and will be

the amount computed from pre-excavation and final sections.

2) MEASUREMENT IN PLACE IN THE EMBANKMENT

The payment quantity of Borrow Excavation will be the excess volume of the authorized embankment over and above the specified shrunken volume of the authorized roadway excavation and other project excavation suitable and available for embankment.

The volume of the above mentioned authorized embankment that will be used in the determination of the payment quantity will be the computed volume of embankment in place, actually constructed. Measurement will be within the lines of embankment shown on the Plans and the ground surface as it existed at the time of starting construction. If prescribed topsoil stripping was carried out prior to placing embankment, a volume equal to the volume of topsoil stripped will be added to the embankment computed above.

The volume of the above mentioned authorized roadway and other project excavation that will be used in the determination of the Borrow Excavation payment quantity will be the sum of the following:

(a) Roadway excavation actually performed below the ground surface as it existed at the time of starting construction.

(b) Volume of all other project excavation that is available for embankment.

This sum will be reduced by the volume of topsoil stripped in the excavation areas and will be further reduced by a shrinkage factor as given in the Supplementary Specifications or shown on the Plans.

If any project excavation, including roadway excavation, is deemed unsuitable by the Engineer, its volume will not be used in the above determination.

No allowance will be made in the payment quantity of Borrow Excavation for shrinkage of the borrow excavation needed to complete the embankment.

The cost of furnishing, placing and compacting the additional borrow excavation on this account shall be included in the unit prices bid for the items of Borrow Excavation.

207.05 BASIS OF PAYMENT

Payment for Borrow-Owner Source and Borrow-Contractor Source will be at the unit prices bid per cubic meter in the Proposal. These payments will include all costs of the work of placing Borrow-Owner Source and Borrow-Contractor Source, as defined in Section 207.01.

If method 207.04 (1) of measurement is specified and if the Contractor is permitted to use Roadway Excavation-Rock or rock from Roadway Excavation-Unclassified as a source of aggregate for pavement, and if the rock thus diverted was needed to complete the embankment to plans, the Engineer will deduct from the borrow or excess cut volume a volume of Borrow Excavation equal to the volume of Aggregate Base Course, Macadam Base, or Aggregate Surfacing thus furnished and placed.

TABLE OF CONTENTS
SECTION 300 BASE COURSES

SECTION	TITLE	PAGE
300	Description	156
301	Plant Mix Bituminous Base Course	156
302	Road Mix Base Course	156
303	Aggregate Base Course	157
304	Macadam Base	161
305	Lime Treated Subgrade	165
306	Roadbed Modification	169
307.	Watering	172
308	Aggregate Surfacing	175
309	Repaving of Existing Surface	179
310	Stockpiling Surfacing Aggregate	182
311	Soil Cement Base Course	183

SECTION 300 BASE COURSES

300.00 DESCRIPTION

This section defines the materials, mixes, equipment and construction methods used to provide foundation base courses, both water bound and bituminous bound, for bituminous pavements described in Section 400, and for Portland cement concrete pavements described in Section 550.

If the base course is to be placed on newly constructed embankment, preparation of the subbase to receive the base course will follow the provisions of Section 203.06. In such case, there will be no separate payment for preparation of subbase, the costs of such work being already included in the various unit prices for excavation or borrow.

If the base course is to be placed on an existing road, modification of this existing roadbed and pavement will follow the provisions of Section 306 and measurement and payment will be made in accordance with that section.

301.00 PLANT MIX BITUMINOUS BASE COURSE

Plant mix bituminous base course shall be prepared and placed in accordance with the provisions of Section 402.

302.00 ROAD MIX BASE COURSE

Road mix base course shall be prepared and placed in accordance with the applicable provisions of Section 405.

SECTION 303 AGGREGATE BASE COURSE

303.01 DESCRIPTION

This work consists of furnishing, placing, and compacting one or more courses of aggregate base, with additives if required, on a prepared surface.

303.02 CLASSES OF AGGREGATE

Aggregate bases are designated as Class 1 or Class 2. The class of aggregate base to be used will be shown on the Plans or in the Special Provisions.

(1) Class 1 — Aggregate for base shall be clean and free from vegetable matter and other deleterious substances. The grading requirements for aggregate material shall conform to AASHO Designation M 147, Grading B, shown in the following table, as determined by Standard Test Method AASHO T 27.

SIEVE SIZE		PERCENTAGE BY WEIGHT PASSING SQUARE MESH SIEVES
50mm	(2 inch)	100
25mm	(1 inch)	75-95
9.5mm	(3/8 inch)	40-75
4.75mm	(No. 4)	30-60
2.00mm	(No. 10)	20-45
0.425mm	(No. 40)	15-30
0.075mm	(No. 200)	5-20

The aggregate shall also conform to the quality requirements shown in the following table.

		TEST METHOD	INDIVIDUAL TEST RESULT
	Abrasion Resistance	T 96	50% Max.
	Sand Equivalent	T176	25 Min.
	Resistance (CBR)	T193*	70 Min.
**	Liquid Limit	T 89	25 Max.
**	Plasticity Index	T 90	6 Max.

The fraction passing the #200 sieve shall not be greater than 2/3 of the amount passing the #40 sieve.

* This test is modified by use of molds and compaction as per AASHO T 180.

** That portion of sample passing a #40 sieve only.

(2) Class 2 — Class 2 aggregate shall be manufactured from material excavated at locations designated on the Plans or in the Special Provisions, and shall meet the gradations specified on the Plans or in the Special Provisions.

The Contractor may break up, crush, or screen waste material in any combination, or use any process he elects to produce aggregate meeting the grading requirements specified in the Special Provisions.

All excess material resulting from processing shall be used in construction of embankments, or shall be otherwise disposed of within the right-of-way as directed by the Engineer. Payment therefor is included in the contract unit prices for excavation.

303.03 SPREADING

Aggregate for base shall be placed on the roadbed as a uniform mixture, spread in layers or windrows, free from pockets of coarse or fine material. Base shall be shaped, watered, and compacted to the required grade and cross-section within the tolerance specified in Section 303.05.

When the subgrade for aggregate base consists of loose sand, a portion of aggregate may be dumped on the subgrade and spread until the subgrade is stabilized to the satisfaction of the Engineer.

The maximum thickness of compacted layers is 15 centimeters (6 inches).

303.04 COMPACTING

Water shall be applied to aggregate bases as provided in Section 307.

The relative compaction of each layer of compacted base material shall be 95 percent or more of dry density as determined in accordance with Standard Test Method AASHO T 180, Method D, with replacement of coarse material as described in note 6 of Method C.

303.05 TOLERANCE

The finished surface of aggregate base which is not to be covered, or is to be covered by material which is paid for by the metric ton, when measured with a 3-meter (10 feet) straightedge, shall not vary at any point more than 20 millimeters (3/4 inch) above or below the grade established by the Engineer.

The finished surface of aggregate base to be covered by material which is paid for by the cubic meter shall not project above the grade established by the Engineer at any point.

303.06 METHOD OF MEASUREMENT

(1) When payment for aggregate is specified on a ton basis, each truckload delivered shall be weighed by a certified weighmaster on certified approved scales. The weighmaster shall furnish to the truckdriver duplicate weighmaster slips showing the gross, tare, and net weight. The weighmaster's

signature and official seal shall be affixed to each slip. One copy of these delivery slips shall be furnished the HA representative on the Project. No material will be accepted unless accompanied by such a delivery slip.

(2) Quantities of aggregate base paid for by the cubic meter will be calculated on the basis of the dimensions shown on the Plans adjusted by the amount of any change ordered by the Engineer.

303.07 BASIS OF PAYMENT

Quantities of aggregate base will be paid for at the contract unit price per metric ton or cubic meter, whichever unit is designated in the contract.

SECTION 304 MACADAM BASE

304.01 DESCRIPTION

This work consists of furnishing and placing one or more courses of crushed stone base with filler and filter layer, if required, on a prepared surface in conformity with the lines, grades, thicknesses, and typical cross sections.

304.02 MATERIALS

Crushed stone base and filler materials shall meet the requirements of AASHO Designation M 75 for the size specified on the Plans or in the Special Provisions. Crushed stone base and filler material may be produced under this contract or furnished by HA from previous produced stockpiles as indicated in the Special Provisions.

The type and grade of bituminous material will be specified in the Contract. Physical requirements are specified in Section 407.00.

304.03 SURFACE PREPARATION

The roadway surface shall be prepared in accordance with instructions in Section 300.00, prior to placing crushed stone base aggregate.

304.04 PLACING CRUSHED STONE BASE

Before placing on the subgrade, crushed stone shall be thoroughly mixed or turned over until it presents a homogenous appearance when placed.

Crushed stone shall be deposited directly on the subgrade with spreader boxes or other measuring devices approved by the Engineer. Crushed stone shall be spread to the proper depth so that compacted layers will not exceed 10 centimeters (4 inches), maximum thickness. Each layer shall be inspected

thoroughly before rolling to detect high and low spots. Crushed stone shall be added or existing stone shifted to provide a true surface. Segregated spots or areas contaminated with subgrade material shall be corrected by removal of unsuitable material and replacement with crushed stone.

304.05 COMPACTION

Each layer shall be compacted with two 10 metric ton, minimum size, smooth-wheel rollers with a weight of 50 to 60 kilograms per centimeter (3300 to 4000 lb. per ft.) of width of the roller. Rolling shall begin at both shoulders or edges first to lock the stone firmly at the edges, then progress gradually toward the center, until the entire layer is thoroughly compacted.

Any depressions formed during rolling shall be brought to true section and grade by the addition of more crushed stone and further rolling.

All vehicles, except the pressure distributor required for bituminous macadam, shall be kept off the surface during and after rolling. If necessary, one-half of the roadway width will be worked at one time, traffic rerouted to the other half and the provisions of Section 105.03 shall apply. Any disturbed areas must be rerolled and again locked before applying screenings or binder.

304.06 APPLICATION OF SCREENINGS

(1) WATER BOUND MACADAM

Each layer shall be bound by gradually applying stone screenings over the surface. Dry rolling shall be continued to prevent caking or bridging on the surface. Later applications of screenings shall be reduced by one-half when the interstices in the coarse aggregate are filled. The surface shall be swept with mechanical or hand brooms to aid spreading. The surface shall be sprinkled with water

until it is saturated, then followed immediately with rolling. Application of water shall follow the provisions of Section 307. More screenings shall be added as required. Sprinkling shall be continued, together with sweeping and rolling, using a speed of 3 km/H (1.8MPH) until a grout is formed that fills all the voids and forms a wave of grout in front of the roller. A curing period of two days shall follow the rolling. During this period no vehicles will be allowed on the surface. Traffic provisions stated in Section 304.05 will apply.

(2) BITUMINOUS MACADAM

The compacted layer of crushed stone shall be sprayed with an application of bituminous material using a pressure distributor. The surface of rock shall be dry and free from foreign material. The amount of bituminous material shall be sufficient to coat the stones but not to fill the voids. The type of bituminous material will be specified on the Plans or Supplemental Specifications and shall meet the provisions of Section 407.

Screenings shall be spread uniformly immediately after the application of bituminous material, and shall be swept with mechanical or hand brooms to assure a uniform application. The surface shall be rolled immediately after spreading and leveling the screenings, adding small amounts of screenings as needed, while rolling progresses to fill all voids. When the stone has been locked in place by rolling, the surface shall be broomed clean of loose screenings. A curing period of one day shall follow the rolling. During this period, no vehicles will be allowed on the surface. Traffic provisions stated in Section 304.05 will apply.

304.07 METHOD OF MEASUREMENT

Quantities of crushed stone base and screenings paid for by the metric ton or by cubic meter will be determined as provided in Section 303.06.

Bituminous material will be measured in accordance with Sections 407.05, 407.09 and 407.14.

304.08 BASIS OF PAYMENT

Accepted quantities of crushed stone base and screenings will be paid for at the contract unit price per metric ton or cubic meter, whichever unit is designated in the contract.

Bituminous material will be paid for at the contract unit prices for Asphalt Cement, Liquid Asphalt, and for Asphalt Emulsion complete in place.

SECTION 305 LIME TREATED SUBGRADE

305.01 DESCRIPTION

This work consists of constructing one or more courses of subgrade using a mixture of soil, hydrated lime and water, and includes the preparation of the roadbed; preparation of materials; application of lime; addition of water; mixing, compacting, and finishing; and protection and maintenance of the completed subgrade.

305.02 MATERIAL

Type I, high calcium hydrated lime shall meet requirements of AASHO Designation M 216.

The grade and type of bituminous material are specified in the contract, and the physical requirements in Section 407.

305.03 PREPARATION OF ROADBED

The surface of the roadbed shall be bladed to the established lines, grades, and cross section. Earth ramps at grade control points, such as existing pavements or bridges, shall be removed to a depth to provide the required thickness for pavement and base. Excess excavated material shall be disposed of as directed.

Sufficient drains shall be cut through excavated material on the shoulders to drain the roadbed completely at all times. Drains shall be cut through windrowed base materials at sufficient intervals to prevent ponding of water, and the windrowed material shall be moved, when necessary, to permit the subgrade to dry.

305.04 PREPARATION OF MATERIALS

The prepared roadbed shall be scarified to the depth and width required for the subgrade stabilization. The material thus

obtained shall be partially pulverized. The depth of scarification shall be carefully controlled, and blading operations conducted in a manner to provide that the surface of the roadbed below the scarified material shall remain undisturbed and shall conform to the established cross section. Prior to beginning stabilization work, all existing unsuitable material and stones retained on a 75mm (3-inch) sieve shall be removed.

305.05 APPLICATION OF HYDRATED LIME

The rate of application of lime shall be as shown on the Plans or as directed by the Engineer. Lime shall be applied to the partially pulverized material as dry powder or as a slurry.

Spreading equipment shall uniformly distribute the lime without excessive loss. No equipment except water trucks and equipment used for spreading and mixing shall be permitted to pass over the spread lime until it is mixed. Any procedure which results in excessive loss or displacement of the lime shall be immediately discontinued.

305.06 ADDITION OF WATER

Water may be added to the mixture of lime and subgrade material by means of pressure water distributors or by means of a traveling plant. Water shall be added during mixing operations to provide a moisture content in a range from the optimum moisture content of the mixture to plus 5 percentage points.

305.07 MIXING

The lime and water shall be thoroughly mixed throughout the scarified material. The mixture shall then be placed in windrows or spread over the roadbed, and the surface sealed with a steel wheel or pneumatic roller to retard the loss of moisture. The mixture shall then age for a period of not less than 48 hours.

After the 48-hour aging period, water shall be added and the mixture brought to the optimum moisture content plus or minus 2 percentage points.

When traveling plants are used, additional mixing with blades, tillers, discs, harrows, or repeated passes of the plant may be required.

305.08 COMPACTION AND FINISHING

Final compaction and finishing shall be completed within 24 hours after final mixing unless otherwise specified by the Engineer. After the materials have been satisfactorily mixed, the mixture shall be spread and compacted to a density of not less than 95 percent of the maximum density determined in accordance with AASHO T 99, Method C, or other approved methods. Light sprinkling may be required during laying operations to maintain the specified moisture content. Compaction shall be accompanied by sufficient blading to eliminate all irregularities.

The surface shall be lightly scarified during finishing operations and bladed to eliminate any imprints left by the equipment. Final rolling of the completed surface shall be accomplished with a pneumatic tire roller.

In-place field density determinations will be made in accordance with AASHO T 191, T 205, or other approved method. The use of AASHO T 224 to correct for oversize particles may be required.

305.09 PROTECTION AND CURING

Upon completion of the compaction and finishing of the treated subgrade, no vehicles or equipment other than sprinkling equipment shall be permitted on the treated subgrade for a period of 7 days unless otherwise directed. During the curing

period the treated subgrade shall be lightly sprinkled with water at frequent intervals to prevent drying.

Any damage to the treated subgrade due to other phases of construction shall be repaired. At least one course of base or subbase shall be constructed on the treated subgrade before hauling operations for the other phases of the project are permitted on the treated subgrade.

305.10 METHOD OF MEASUREMENT

Hydrated lime will be measured by the metric ton. All materials which are measured or proportioned by weight shall be weighed on accurate, approved scales by competent, qualified personnel at locations designated by the Engineer. If material is shipped by rail, the car weight may be accepted provided that only the actual weight of material be paid for. However, only scale weights will be acceptable for material to to be passed through mixing plants. Each day trucks used to haul material being paid for by weight shall be weighed empty and at such times as the Engineer directs. Each truck shall bear a plainly legible identification mark. If sacked hydrated lime is used, the net weight as packed by the manufacturer will be used for measurement.

Bituminous materials will be measured in accordance with Sections 407.05, 407.09, and 407.14.

Processing will be measured by the square meter within dimensions shown on the Plans.

305.11 BASIS OF PAYMENT

The accepted quantities of lime treated subgrade will be paid for at the contract unit prices per metric ton for Hydrated Lime, per liter for Liquid Asphalt and Emulsified Asphalt, and per square meter for Processing Lime Treated subgrade complete in place.

SECTION 306 ROADBED MODIFICATION

306.01 DESCRIPTION

The work in this section consists of modifying the existing roadbed (subgrade and riding surface) of a dirt road or a bituminous-surfaced dirt road. The modified base will be used for a base for a pavement surface of a higher degree.

Materials in the existing roadbed to be considered acceptable for this work shall meet the requirements of AASHO Designation M 145, and shall be in group A-1, A-2-4 or A-2-5 or A-3 of that standard. The Engineer shall order roadbed material removed from the site if it does not meet the above standards. Borrow material, if ordered, shall meet the same requirements.

306.02 CONSTRUCTION

If required on the plans, the shoulder slopes and ditches shall be bladed sufficiently to form a uniform shoulder line, neat in appearance. The material so obtained and the surfacing material existing on the road surface shall be spread uniformly over the roadbed. All weeds, sod, grass, roots, or other objectionable material obtained from the shoulder slopes and ditches shall be removed from the surface. If necessary to provide the required depth of subgrade modification, the roadbed shall be scarified to the necessary depth or additional material hauled in from designated locations. All material shall be thoroughly mixed and pulverized until not more than 5 percent of the material, exclusive of gravel or stone, is retained on a 50mm (2 inch) sieve. The material so mixed shall be placed in a uniform windrow.

The quantity of aggregate for subgrade modification, as designated on the plans, shall be placed, windrowed and brought to a uniform section. The windrowed materials shall be

blended together until all materials are uniformly distributed throughout the combined windrow.

Sufficient water shall be added during the mixing operation to provide the optimum moisture content, plus or minus 2 percentage points.

The material shall then be spread uniformly to the required cross section and compacted to a density of not less than 95 percent of the maximum density determined in accordance with AASHO T 180. Rolling shall be accompanied by sufficient blading to assure a smooth surface. In place field density determinations will be made in accordance with AASHO T 191, T 205, or other approved method. The use of AASHO T 224 to correct for oversize particles may be required.

306.03 FINISHING AND CURING

If a base or surface course is included in the contract, the surface of the completed subgrade shall be satisfactorily maintained until the base or surface course has been placed. If required, additional water shall be applied to prevent checking or raveling.

306.04 METHOD OF MEASUREMENT

Roadbed modification will be measured by square meters of roadbed actually modified.

Borrow material will be measured in cubic meters. Borrow pit measurement or truck volume measurement will be used at the option of the Engineer.

306.05 BASIS OF PAYMENT

Roadbed modification will be paid for at the unit price bid per square meter. This price shall include blading of ditches and shoulders; scarifying and pulverizing the existing surface; placing

and mixing of materials on the road; compacting materials; finishing the surface; and maintenance of completed surface, when so directed in the Plans or Supplementary Specifications.

Borrow material will be paid for at the unit price bid per cubic meter and shall include all the costs of furnishing borrow material to the point where it is to be built into the roadbed.

SECTION 307 WATERING

307.01 DESCRIPTION

Watering shall consist of furnishing and applying water as required in the compaction of embankments, roadbeds and surfacing materials, in accordance with the Plans and Specifica tions. It shall also refer to applying water for dust control in traffic areas adjacent to construction and along detour roads.

307.02 MATERIAL

Water shall be free of excess vegetable material, shall not be septic, or have an objectionable odor or color. The Contractor shall obtain permission from the appropriate authority before removing water from a water supply system or before pumping from a stream or pond. Copies of such permission shall be furnished to the Engineer.

307.03 CONSTRUCTION METHODS

(1) WATER FOR MAINTENANCE OF TRAFFIC AND DETOURS

In the maintenance of traffic and detours, watering shall be performed at any hour of the day and on any day of the week that the Engineer may determine as necessary for proper performance or protection of the work and for adequate alleviation of dust nuisances.

(2) WATERING OF EMBANKMENTS, ROADBEDS, AND SURFACING AGGREGATES

Water shall be applied on the areas and in the quantities and at the times directed by the Engineer. The Contractor shall furnish and operate water-applying tanks, equipped with spray bars for use on embankments, subgrades, and surfacing. They shall be mounted on pneumactic-tired trucks or pneumatic-tired trailers pulled by pneumatic-

tired equipment. The minimum capacity of any water distributing tank shall be 4000 liters (1000 gallons). The water-distributing equipment shall be constructed to provide and assure accurate and uniform distribution of the required rates of water per unit of surface area. The control valves shall be constructed to permit positive closing and to prevent leakage.

Sufficient equipment shall be available at all times to apply the amount of water required within the time interval necessary to secure proper results before evaporation absorption, or drainage, prevents required results. When permitted by the Engineer, watering may be done at night or at other times to minimize losses by evaporation, absorption or drainage.

(3) PRE-WETTING EXCAVATION AREAS

The Contractor may in lieu of, or in addition to, the methods provided by Section 307.03 (2) pre-wet the material in excavation areas prior to removal and placement in embankment.

The soil shall be moistened by sprinkler irrigation. The excavated material shall contain a uniform moisture content approaching optimum for the full depth of the excavation.

307.04 METHOD OF MEASUREMENT

(1) Water used in accordance with Section 307.03 (1) will be measured by the number of one-thousand liter units as ordered, measured in the vehicle at the point of delivery on the road. Measuring may be done by a meter of an approved type, or manual count of the number of loads delivered or as counted by an approved type of a load counter affixed to the vehicle. All equipment for measuring,

such as a meter or load counter, shall be furnished and installed at the expense of the Contractor.

(2) Water used in accordance with Section 307.03 (2) will not be measured. However, if the Engineer directs that a subgrade or base course, previously compacted, be reworked, the water used in reworking will be measured in accordance with Section 307.04 (1) above.

(3) Water used in accordance with Section 307.03 (3) will not be measured.

307.05 BASIS OF PAYMENT

The accepted quantities of this item shall be paid for at the unit price bid per one thousand liter unit, which price and payment shall be full compensation for the work.

SECTION 308 AGGREGATE SURFACING

308.01 DESCRIPTION

This work consists of placing a surface course of aggregate on a previously prepared surface, and includes compaction of the material and finishing to the specified smoothness.

308.02 MATERIALS

The type, gradation and other requirements of surface aggregate will be specified on the Plans or in the Special Provisions. Aggregate material may be produced under this contract or furnished by HA from previously produced stockpiles as indicated on the Plans or in the Special Provisions.

Binder material, when required in addition to that naturally present, consists of fine natural soil particles or crusher dust free from vegetable matter, humus, or other undesirable matter. The type, gradation and use of binder material will be determined by the Engineer during the process of the work.

Sources of binder will be shown on the Plans or designated by the Engineer.

When required, binder s' 'l be added at the plant or on the roadbed. If added on th oadbed, binder shall be spread uniformly across the roadwr ver the loosely placed surfacing course in the designated am ants, and thoroughly blended and mixed into the surfacing material. Binder shall be worked into the entire depth of the surface course when the depth is 7.5 centimeters (3 inches) or less, and into at least the top 7.5 centimeters (3 inches) when the depth of surface course is greater.

308.03 ROADBED PREPARATION

The roadbed shall be prepared in accordance with the provisions of Section 300.

308.04 PLACING SURFACE AGGREGATE

Surface aggregate material shall be placed on the roadbed starting at a point farthest from the loading source. Material shall be deposited in a uniform manner to insure the planned thickness of each course after compaction. When the required compacted depth of an aggregate surfacing course exceeds 15 centimeters (6 inches), it shall be constructed in two or more layers of approximately equal thickness. The maximum compacted thickness of any one layer shall not exceed 15 centimeters (6 inches).

Any one of the following methods for mixing the surface material may be used, unless otherwise specified. Binder shall be added during the mixing process.

The aggregate may be watered to optimum moisture content prior to or after crushing and loading in transport vehicles.

A. STATIONARY PLANT METHOD

Mix the surfacing material and water in an approved mixer. Add water during the mixing operation in the amount necessary to obtain optimum moisture content.

Transport the mixed material to the job-site without loss of moisture and place it on the roadbed using an approved aggregate spreader.

B. TRAVEL PLANT METHOD

Place the material for one layer of surfacing through an aggregate spreader or windrow sizing device for proper distribution along the roadbed. Add water while mixing the material with a traveling mixing plant to obtain optimum moisture content.

C. ROAD MIX METHOD

After the material for each layer of surfacing course has

been placed, use motor graders for mixing until the mixture is uniform and at optimum moisture content.

After mixing is completed, spread each layer of material, without segregation, to the proper grade and section. Correct or remove equipment that fails to maintain uniform gradation of material over the entire width and depth of the work. Water may be added, if directed, prior to compacting.

308.05 COMPACTION

Compaction of each layer shall continue until at least 95% of maximum density determined in accordance with Standard Test Method AASHO Designation T 180, Method D, is obtained. The surface of each layer shall be maintained during compaction operations in a manner that produces a uniform texture and firmly keys the aggregate together.

In place field density determinations will be made in accordance with Standard Test Method, AASHO Designation T 191 or T205.

308.06 TOLERANCE

The finished surface of aggregate surfacing material shall not vary from the established grade by more than 25 millimeters (1 inch) when the maximum size aggregate is more than 40 millimeters (1 $\frac{1}{2}$ inch); by more than 20 millimeters (3/4 inch) when maximum size aggregate is between 20 millimeters (3/4 inch) and 40 millimeters (1 $\frac{1}{2}$ inch); and by more than 15 millimeters (5/8 inch) when maximum size aggregate is less than 20 millimeters (3/4 inch).

The maximum deviation of the surface from a 3 meter (10 feet) long, straight edge placed parallel to centerline of the roadway shall not exceed 15 millimeters (5/8 inch). Areas

exceeding this tolerance shall be repaired using similar surfacing material and methods approved by the Engineer.

308.07 METHOD OF MEASUREMENT

Surface aggregate and binder material will be measured by the cubic meter or metric ton in accordance with Section 303.06.

The weight of aggregate may include the actual weight of natural moisture up to a maximum of 5% moisture content. The weight of natural moisture in excess of 5% will be deducted from the aggregate scale weights. Weight of water added at the direction of the Engineer, above the natural moisture content, will be deducted from the weight of aggregate. Moisture determinations will be made on the dry basis as follows: Weight of wet sample minus weight of dry sample equals the weight of water.

$$\frac{\text{Weight of water in sample} \times 100}{\text{Weight of dry sample}} = \text{Percent Moisture}$$

308.08 BASIS OF PAYMENT

Accepted quantities of surface aggregate will be paid for at the contract unit price per cubic meter or metric ton for aggregate and binder.

SECTION 309 REPAVING OF EXISTING SURFACE

309.01 DESCRIPTION

This work consists of reshaping the existing earth, gravel, or bituminous-surfaced roadbed, to conform with the typical sections and true grade line in preparation for immediate construction of a new surface of the same degree.

309.02 SUBGRADE REPAIRS

In areas where the Engineer determines that surface failures are the result of soft and unstable subgrade, the Contractor shall remove the damaged surface and excavate all soft and undesirable material from the subgrade. The excavated subgrade shall be backfilled with select material meeting the conditions required in Section 309.03.

The subgrade shall be compacted and graded to conform with the subgrade profile and section. Surface repaving shall then be continued as described below.

309.03 MATERIALS

Materials in the existing road surface, to be considered acceptable for this work, shall meet the requirements of AASHO Designation M 145 and shall be in Group A-1, A-2-4, A-2-5 or A-3 of that Standard. The Engineer shall order material removed from the job if it does not meet the above standards. Borrow material, if ordered, shall meet the same requirements. Bituminous materials shall meet the requirements of Section 407.

309.04 WATER-BOUND AGGREGATE SURFACES

Before forming the road surface, the shoulders and ditches shall be bladed sufficiently to form a uniform shoulder line, neat in appearance. The material so obtained and the surfacing

material existing on the road surface shall be spread uniformly over the roadbed. All weeds, sod, grass, roots, or other objectionable material obtained from the shoulders and ditches shall be removed from the surface. All material shall be thoroughly mixed and pulverized until not more than 5 percent of the material, exclusive of gravel or stone, is retained on a 50mm (2 inches) sieve. The material so mixed shall be placed in a uniform windrow. Sufficient water shall be added during the mixing operation to provide the optimum moisture content, plus or minus 2 percentage points.

The material shall then be spread uniformly to the required cross section and compacted to a density not less than 95 percent of the maximum density determined in accordance with AASHO T 180. Rolling shall be accompanied by sufficient blading to assure a smooth surface. In-place field density determinations will be made in accordance with AASHO T 191, T 205, or other approved method. The use of AASHO T 224 to correct for oversize particles may be required.

309.05 BITUMINOUS–BOUND AGGREGATE SURFACES

The existing bituminous surface shall be scarified and broken up. The shoulders and ditches shall be bladed sufficiently to form a uniform shoulder line, neat in appearance. The material so obtained, if acceptable to the Engineer, shall be spread on the roadbed and mixed with the broken bituminous surface. When the mixture is uniform and homogenous, it shall be graded and rolled to the grades and profiles shown on the plans. When the surface is rolled to maximum density and to proper profile, bituminous material shall be applied in accordance with directions shown on the Plans or given by the Engineer. Screenings shall be spread over the bituminous material and broomed before allowing traffic to use the road.

309.06 METHOD OF MEASUREMENT

Repaving of existing surfaces will be measured by area for each type of surface prepared.

Borrow material will be measured as provided in Section 306.04.

Bituminous material will be measured in accordance with Sections 407.09 and 407.14.

309.07 BASIS OF PAYMENT

Accepted quantities of Existing Surface Repaving will be paid for at the contract unit price per square meter.

Bituminous material will be paid for at the contract unit prices for liquid asphalt or for emulsified asphalt, complete in place. Aggregate will be paid for at the contract unit prices per metric ton or cubic meter.

SECTION 310 STOCKPILING SURFACING AGGREGATE

310.01 DESCRIPTION

This work consists of furnishing and stockpiling surface aggregate at sites designated by the Engineer. The aggregate furnished may be intended for future use on the project or it may be furnished and stockpiled for future use by the HA.

310.02 STOCKPILES

The Contractor shall prepare the stockpile area after its limits have been set by the Engineer. All weeds, stumps, rocks, or other contaminating material shall be removed from the site. The ground shall be graded and compacted. Aggregate shall be placed in piles so spaced that there are at least two meters (6 feet) of clear space between the toes of slope of adjoining piles. When material is removed from a pile, care shall be taken to prevent contamination with adjoining piles and any contamination shall be immediately corrected. No aggregate shall be stockpiled on travelled roads.

310.03 MEASUREMENT AND PAYMENT

There will be no payment for preparation of site, stockpiling, or removal of the material; these costs shall be included in the various unit prices for furnishing and placing aggregate.

SECTION 311 SOIL-CEMENT BASE COURSE

311.01 DESCRIPTION

This work shall consist of constructing one or more courses of a mixture of soil and Portland cement on a prepared surface, or by processing existing material and Portland cement in accordance with these specifications in reasonably close conformity with the lines, grades, thicknesses and typical cross-sections shown on the Plans or established by the Engineer.

Unless otherwise provided, the Contractor may use either the mixed-in-place or central plant method as described below.

311.02 MATERIALS

Materials shall meet the requirements of the appropriate sections as listed below:

Water	Section 504
Portland Cement	Section 504
Bituminous Material	Section 407

311.03 WEATHER AND SEASONAL LIMITATIONS

Cement shall not be applied to or mixed with the soil when, in the opinion of the Engineer, the weather conditions are unfavorable.

311.04 PREPARATION OF SUBBASE

Where the existing material is to be processed, the area shall be carefully shaped to the proper grade and cross-section by shaping the existing material and adding material as necessary. Any material retained on a 75mm (3 inch) sieve, any vegetation, and other objectionable material shall be removed.

Where the base course is to be constructed on a prepared

surface, the surface shall be shaped to the lines, grades and cross-section shown on the plans and brought to a firm, unyielding surface compacted to attain at least 95 percent of the maximum dry density as determined by the Standard Method of Test for the Moisture Density Relationship of Soils, AASHO T 99, Method C.

Areas of soft, yielding or other unsuitable material that will not compact readily shall be removed and replaced with a suitable material, and properly compacted as directed by the Engineer.

311.05 PULVERIZING

When necessary, the soil to be processed shall be scarified and pulverized prior to the application of the cement. Pulverizing shall continue during dry mixing operations until 100 percent of the soil by dry weight passes a 25cm (1 inch) sieve and 80 percent of the soil passes a 4.75mm (No. 4) sieve, exclusive of gravel or stone retained on these sieves.

311.06 APPLICATION OF CEMENT

The specified quantity of Portland cement, as determined by the Engineer, shall be uniformly spread with an approved mechanical spreader on the soil to be processed in a manner satisfactory to the Engineer.

When bulk cement is used, only methods and equipment approved by the Engineer shall be used for handling, weighing and spreading the cement.

The spreading operations shall be limited to such an area that the spreading of cement, dry mixing, application of water, moist mixing and compaction shall be continuous and completed in daylight hours and within a 10-hour period.

The percentage of moisture in the soil at the time of

cement application shall not exceed the quantity which will permit a uniform mixture of soil and cement during the mixing operations.

Spread cement that has been displaced by the elements or by the Contractor's operations shall be replaced at the Contractor's expense before mixing is started.

No equipment, except that used in spreading and mixing, will be allowed to pass over the freshly spread cement until it is mixed with the soil.

311.07 MIXING

(1) IN-PLACE MIX

After the cement has been spread, it shall be mixed with pulverized soil, using mixing devices approved by the Engineer. Mixing shall be continued until the resulting mixture is thoroughly blended and uniform in appearance.

Water shall then be added uniformly to the mixture by pressure-distributing equipment equipped with a metering device which will assure that the application of all the water required on the section being processed will be placed within a 3-hour period. Each application or increment of water shall be incorporated into mixture in such a manner as to avoid excessive concentration of water on and near the surface. Mixing shall be continued until a uniform mixture of soil, cement and water is obtained.

The mixing operations shall be confined within the lines shown on the Plans, and spillover of material on the shoulders shall be avoided.

(2) CENTRAL PLANT MIX

The soil, cement and water shall be mixed in a pugmill either of the batch or continuous flow type. The plant shall

be equipped with feeding and metering devices which will introduce the soil, cement and water into the mixer in the quantities specified. Mixing shall be continued until a uniform mixture of soil, cement and water is obtained.

The mixture shall be transported to the roadway in suitable vehicles equipped with protective covers and spread on the prepared moistened surface in a uniform layer by an approved spreader.

Dumping of the mixture in piles or windrows upon the prepared surface will not be permitted.

Not more than 60 minutes shall elapse between the start of moist-mixing at the pugmill and the start of compaction of the soil cement on the roadway.

311.08 MOISTURE

When mixing is completed or when plant mixture has been placed, the percentage of moisture in the mixture, based on oven-dry weights, shall not be more than 2 percent above or below the specified optimum moisture content.

The specified moisture content and maximum density will be determined in the field by a moisture-density test using AASHO T-134, Method B, on representative samples of soil-cement mixture obtained from the base course being processed, at the conclusion of moist-mixing operations.

311.09 COMPACTION

Prior to the beginning of compaction, the mixture shall be in a loose condition for its full depth and width. The loose mixture shall then be compacted by rolling, until the entire soil-cement mixture has been uniformly compacted to the density specified by the Engineer. The type, size, weight and number of rollers and the rate of operation shall be sufficient to

uniformly compact the section being processed to the required density within 2 hours after completion of moist-mixing.

Any portion of the soil-cement that has a density of 80 kg/meter^3 (5 pound/cu. ft.) or more below the maximum density as determined in the field by a moisture density test using AASHO T-134, Method B, shall be corrected, or removed and replaced to meet this specification.

311.10 FINISHING

When initial compaction of the soil-cement mixture is nearing completion, the surface of the base course shall be shaped with an approved power grader in close conformity with the lines, grades, and cross-section and compaction continued using a steel wheel or pneumatic-tired roller or both, supplemented by broom-dragging, if necessary, until uniform and adequate compaction is obtained.

The moisture content of the surface material shall be maintained at not less than the specified optimum moisture content during finishing operations and until the curing material is applied.

Surface compaction and finishing shall be done in such a manner as to produce, in not longer than 2 hours from the completion of the compaction, a smooth, dense surface, relatively free of surface compaction planes, ridges, low spots or loose materials.

311.11 PROTECTION AND CURING

After the soil-cement base course has been finished as specified herein, it shall be protected against drying by the application of cutback asphalt. The curing material shall be applied as soon as possible, but not later than 24 hours after the completion of finishing operations.

Periodic water applications shall be applied to the finished surface if, in the opinion of the Engineer, it is necessary to prevent drying before the application of the bituminous material. The soil-cement base course shall be cured 7 days before the application of any wearing surface.

At the time the bituminous material is applied, the surface shall be free from all loose material.

The bituminous material used shall be uniformly applied to the surface of the completed soil-cement base course at the rate of approximately 1 liter per sq. meter (0.2 gallon per sq. yard) with heating and distributing equipment approved by the Engineer.

Sufficient granular cover shall be applied to prevent the pickup of the bituminous material.

311.12 CONSTRUCTION JOINTS

At the end of each day's construction, a straight transverse construction joint shall be formed by cutting back into the completed work to form a vertical face. Damage to completed work shall be avoided.

Base course for roads, streets, or similar areas shall be processed and finished full width each day without longitudinal construction joints. Base courses for parking areas or wide surfaces shall be built in a series of parallel lanes of convenient length and width, meeting the approval of the Engineer. Straight, transverse and longitudinal joints shall be formed at the end and at the edge of each day's construction by cutting back into the completed work to form a vertical face, free of loose or shattered material.

311.13 TRAFFIC

Completed portions of the soil-cement base course may be

opened for use immediately to passenger vehicles and unloaded pickup trucks, and to all traffic after seven days' curing period, provided the base course has hardened sufficiently to prevent marring or distorting of the surface by equipment or traffic, and provided the curing, as specified in Section 311.11 is not impaired.

311.14 MAINTENANCE

The Contractor shall be required, within the limits of his contract, to maintain the soil-cement base course in good condition and in a manner satisfactory to the Engineer from the time he first starts work until all work has been completed and accepted. Maintenance shall include immediate repairs of any defects that may occur. Repairs are to be made in a manner to insure restoration of a uniform surface and durability of the part repaired. Faulty work shall be replaced for the full depth of treatment. Any low areas shall be remedied by replacing the material for the full depth of treatment rather than by adding a thin layer of soil-cement to the completed work. Maintenance, repairs and correction of faulty work shall be at the Contractor's expense.

311.15 TOLERANCE

The base course shall be finished to within the tolerance allowed on the typical section, provided that this deviation is not maintained for a distance of longer than 15 meters (50 feet), and provided that the required crown or superelevation is maintained. It shall be in close conformity to the lines, grades and cross-sections as shown on the Plans or as determined by the Engineer.

The thickness of Soil-Cement Base Course shall have a tolerance of plus or minus 12mm (1/2 inch) as determined by cores taken in the finished base course.

311.16 METHOD OF MEASUREMENT

The quantities will be measured for payment in accordance with the following methods:

(1) Soil-Cement Base Course will be measured in place and the area computed in square meters of the base course completed in place.

(2) The number of cubic meters of Unclassified Excavation for Soil-Cement Base Course, excavated according to the Plans and Specifications, measured in its original position by the method of average end areas, including the removal of any unsuitable material as specified in Section 311.04. When excavation is included in the contract, all authorized excavation will be measured for payment under the applicable excavation item.

(3) The number of cubic meters of soil for Soil-Cement Base Course, placed in accordance with this Specification and the soil used to replace unsatisfactory material in accordance with Section 311.04, will be measured by average end areas or other approved methods in its original position.

(4) The number of metric tons of Portland cement for Soil-Cement Base Course, used according to these Specifications.

(5) The number of liters or metric tons of Cutback Asphalt, measured as specified in Section 407.

311.17 THICKNESS MEASUREMENT

Thickness of soil-cement base will be checked by means of core samples. At such locations as the Engineer may designate, one core will be taken for each 800 square meters (1,000 square yards) of soil-cement surface. If the thickness of this core is within 12mm (1/2 inch) of the plan thickness, the area will

be acceptable and full payment will be made. If the thickness of this core differs from the plan thickness by more than 12mm (1/2 inch) but not more than 25mm (1 inch), 2 additional cores will be taken from the area represented and the average of the 3 cores determined. If the average thickness is not more than 12mm (1/2 inch) from the plan thickness, the area will be acceptable. If the average thickness of the cores is more than 12mm (1/2 inch), but not more than 25mm (1 inch) from the plan thickness, an adjusted unit price will be paid for each 800 square-meter (1,000 square-yard) area that is deficient.

In calculating the average thickness of the pavement, measurement which is in excess of the specified thickness by more than 12mm (1/2 inch) shall be considered as the specified thickness, plus 12mm (1/2 inch).

If the average thickness is deficient by more than 25mm (1 inch), the Soil-Cement Base Course shall be removed and replaced or will not be included in the area measured.

311.18 BASIS OF PAYMENT

The accepted quantity of Soil-Cement Base will be paid for as follows :

(1) Preparation of surface, scarifying, spreading cement, watering, rolling, and maintenance will be paid for at the unit price bid per square meter of Soil-Cement Base Course.

(2) Removal of unsuitable material will be paid for by the cubic meter as Roadway Excavation-Unclassified.

(3) Soil for Soil-Cement Base Course will be paid for by the cubic meter. This price will include furnishing, placing, spreading and, if directed, compacting soil before spreading cement.

(4) Portland cement will be paid for by the metric ton. This price will include all costs of furnishing and delivering cement to the site.

(5) Cutback Asphalt will be paid for by the liter or metric ton as specified. This price will include the cost of furnishing and placing cutback asphalt and furnishing and placing granular cover.

When the Soil-Cement Base Course average thickness as determined under measurement is found to be deficient more than 12mm (1/2 inch) in thickness, but with a deficiency of not more than 25mm (1 inch), an adjusted price will be used in payment. This adjusted price will bear the same ratio to the contract unit price as the average thickness bears to the thickness specified on the Plans.

No payment over the contract unit price for Soil-Cement Base Course will be made for any pavement, the average thickness of which, determined as provided above, exceeds the thickness shown on the Plans. No payment shall be made for Soil-Cement Base Course if the thickness as determined above is found to be deficient by more than 25mm (1 inch).

Plan thickness will be the nominal thickness specified without allowance for tolerance. The average thickness of cores in determining adjusted unit price will not take into consideration the allowable tolerance.

No allowance will be made for any materials used or work done outside the limits indicated on the Plans or as specified by the Engineer.

TABLE OF CONTENTS
SECTION 400 BITUMINOUS PAVEMENT

SECTION	TITLE	PAGE
400	Description	194
401	Bituminous Concrete	194
402	Bituminous Base Course	221
403	Bituminous Prime or Tack Coat	225
404	Bituminous Surface Treatment	229
404.50	Penetration Aggregate Surface Course	241
405	Road Mix Bituminous Pavement	245
406	Seal Coat	255
407	Bituminous Materials	261

SECTION 400 BITUMINOUS PAVEMENT

400.00 DESCRIPTION

This section defines the materials, mixes, equipment, and construction methods used to provide bituminous-bound surfaces. In addition, as stated in Sections 301.00 and 302.00, it also contains the pertinent provisions for bituminous-bound base courses.

SECTION 401 BITUMINOUS CONCRETE

401.01 DESCRIPTION

This section covers general requirements that are applicable to all types of bituminous pavements of the plant-mix type irrespective of gradation of aggregate, kind and amount of bituminous material, or pavement use. Deviations from these general requirements will be indicated in the specific requirements for each type.

Plant-mix pavement work shall consist of one or more courses of plant-mix bituminous mixture constructed in accordance with these specifications and in reasonably close conformity with the lines, grades, thickness, and cross-sections shown on the plans or established by the Engineer.

The types of Plant-Mix Bituminous Surfacing shall be designated as Type 1 (no-bin separation) ; Type 2 (2-bin separation) or Type 3 (3-or more bin separation).

401.02 COMPOSITION OF MIXTURES

The bituminous plant-mix is composed of a mixture of aggregate, filler if required, and bituminous material. The aggregate fractions are sized, uniformly graded and combined in such proportions that the resulting mixture meets the grading requirements of the job-mix formula.

The Engineer will establish all job-mix formulas. At least 15 days prior to mixing operations, the Contractor shall submit representative samples of the proposed plant-mix aggregates and mineral filler to the HA laboratory for analysis and design of the job-mix formula. These samples shall meet the requirements of Section 401.04, Table I or Table II, and of Section 401.05, before the Engineer will design the job-mix formula. Any delays due to the Contractor's failure to submit acceptable samples will be his responsibility.

The maximum permissible variations from the job-mix formula are as shown for each type of plant-mix. The permissible variation from the job-mix formula does not permit the use of any mix which is outside the specification limits, through the application of the variation.

A change in sources of aggregate materials shall require a new job-mix formula before the new material is used.

401.03 BITUMINOUS MATERIAL

Bituminous material shall be the type and grade stipulated in the contract or shown on the Plans and shall be in conformance with the requirements of Section 407.

401.04 AGGREGATE

(1) GENERAL REQUIREMENTS

(a) The aggregate shall meet the applicable requirements of Section 303 – Aggregate Base Course.

(b) The material from which the aggregate is to be produced shall have a wear factor not to exceed fifty percent at five hundred revolutions, as determined by AASHO Test Method T 96.

(c) Not less than fifty percent by weight of the coarse aggregate particles shall have at least one fractured face.

(d) The liquid limit for that portion of the fine aggregate passing a No. 0.425 (40) sieve shall not exceed twenty-five, nor shall the plasticity index exceed six, as determined by AASHO Test Methods T 89 and T 90 respectively.

(e) The composite aggregate shall be free from adherent films of clay or other matter that will prevent thorough coating with bituminous material.

(f) No intermediate sizes for cover aggregate or for other purposes shall be removed from the material in the course of production unless authorized in writing by the Engineer.

(g) Material retained on the No. 4.75 (4) sieve shall be classed as coarse aggregate; and material passing the No. 4.75 (4) sieve shall be classed as fine aggregate.

(2) REQUIREMENTS

TYPE 1 & 2. The aggregate for Type 1 or Type 2 Plant-Mix Bituminous Surfacing, including mineral filler when required, shall meet the requirements of Table 1 below.

TABLE 1 – TYPE 1 and TYPE 2

Percentage by Weight Passing Square-Mesh Sieves
AASHO T2

SIEVE SIZE	PERCENT PASSING	JOB-MIX VARIATION
Passing		
19mm (3/4 inch) Sieve	100	———
No. 4.75 (No. 4) Sieve	45-70	Plus or Minus 7.0%
No. 2.0 (No. 10) Sieve	25-55	Plus or Minus 4.0%
No. 0.075 (No. 200) Sieve	2-10	Plus or Minus 2.0%
Asphalt % by weight of total mix	4-7	Plus or Minus 0.4%

(3) REQUIREMENTS

TYPE 3. The aggregate for Type 3 asphalt concrete, including mineral filler when required, shall meet the requirements shown in Table II.

TABLE II — TYPE 3

Percentage by Weight Passing Square-Mesh Sieves
AASHO T2

SIEVE SIZE	PERCENT PASSING	JOB-MIX VARIATION
19mm (3/4 inch) Sieve	100	———
12mm (1/2 inch) Sieve	80-100	Plus or Minus 7.0%
9mm (3/8 inch) Sieve	70-90	Plus or Minus 7.0%
No. 4.75 (No.4) Sieve	50-70	Plus or Minus 7.0%
No. 2.36 (No.8) Sieve	35-50	Plus or Minus 4.0%
No. 0.425 (No. 40) Sieve	15-25	Plus or Minus 4.0%
No. 0.180 (No. 80) Sieve	9-18	Plus or Minus 3.0%
No. 0.075 (No. 200) Sieve	4-10	Plus or Minus 2.0%
Asphalt % by weight of total mix	4-7	Plus or Minus 0.4%

401.05 MINERAL FILLER

Mineral filler shall meet the requirements of AASHO M 17.

When the combined grading of the coarse and fine aggregates is deficient in material passing the No. 0.075 (200) sieve, a commercial filler shall be added. The amount of filler added shall be only that necessary to make the combined grading of the materials comply with the grading requirements of the completed mixture. The maximum amount of filler added shall not exceed 3 percent by weight of the combined aggregate.

Commercial filler may consist of Portland cement, ground

limestone, fly ash, hydrated lime, fine graded silt, clay, or slag, finely powdered material from crushed rock, or other fine graded mineral material.

401.06 BITUMINOUS MIXING PLANT

(1) REQUIREMENTS FOR ALL MIXING PLANTS

The plant shall be of sufficient capacity and shall be designed and coordinated to handle adequately the proposed bituminous concrete mixtures within the specified job-mix tolerances as provided in the contract. The plant shall be maintained in good mechanical condition. Any defect which adversely affects the functioning of a plant or plant unit, or the quality of the mixture, in any manner, shall be corrected immediately upon instructions from the Engineer. The plant site shall have adequate storage facilities. Sufficient storage space shall be provided for separate stockpiles, bins, or stalls for each size of aggregate. Different aggregate sizes shall be kept separated until they have been delivered, without segregation, by the feeder or feeders to the boot of the cold elevator, or elevators, in their proper proportions. The storage yard shall be maintained neatly and orderly and the separate stockpiles shall be readily accessible for sampling.

Mixing plants shall be either the weight-batching type or the continuous-flow type. Both types of plants shall be equipped with satisfactory conveyors, power units, aggregate handling equipment, aggregate screens and bins, and shall be so coordinated and operated as to produce a mixture consistent within the job-mix tolerances specified.

Mixing plants, batch or continuous, shall have a minimum production capacity of 50 metric tons an hour unless the Engineer permits a plant of lesser capacity.

Mixing plants that are not capable of continuously producing a mixture, meeting requirements as specified, shall not be used.

(2) MINERAL FILLER

If no provision is made to weigh the mineral filler in the weigh box at the mixing plant with the other aggregates, the proportions of mineral filler shall be determined on a weight basis and shall be measured separately from the other aggregates. After the proportions of mineral filler have been determined, the material may be added to the mixture at the mixing plant by volume or weight measurement.

The mineral filler shall be stored in a separate bin and fed directly into the mixture in a manner that will provide complete mixing. The rate of feed shall be controlled to provide a uniform weight of mineral filler into each batch or load.

(3) STORAGE AND HEATING EQUIPMENT

Tanks for storage of bitumen shall have a total capacity sufficient for not less than four hours' run of the mixing plant, and shall be capable of heating the bitumen, under effective and positive control at all times, to temperature requirements specified. The heating system shall provide uniform heating of the entire contents of tanks.

Storage tanks shall have a positive means of measuring the quantity therein, by gauge, calibrated rod, or float.

Heating shall be accomplished by steam coils, electricity, or other approved means. No flame shall come in contact with the heating tanks. The circulating system for bitumen shall be a closed system of adequate capacity. It shall cause proper and continuous circulation during the entire

operating period, have its own pump or pumps, and shall have no inlet or outlet pipe or drain into which fuel oil or similar material can be introduced.

(4) FEEDER FOR DRYER

Plants shall be provided with accurate mechanical means for uniformly feeding the mineral aggregate into the dryer. Uniform production shall be obtained.

If separate stockpiles are provided, storage space shall be large enough so that each size of aggregate can be stored without contaminating the other sizes.

(5) DRYER

Plants shall include a dryer or dryers which continuously agitate the aggregate during the heating and drying process. The dryer shall be equipped with an approved dial scale and an armored thermometer, electric pyrometer, or other approved thermometric instrument. The thermometric instrument shall be placed at the discharge chute of the dryer and shall indicate or register automatically the temperature of the heated aggregate. After drying, all transfer and conveyance of material shall be completely enclosed.

(6) SCREENS

Plant screens, capable of screening all aggregate to the specified sizes and proportions and having normal capacity in excess of the full capacity of the mixing unit, shall be provided.

(7) BINS

The plant shall be equipped with storage bins, designed to protect the aggregate from the weather, and of sufficient size to adequately supply the mixer when it is operating

at full capacity. Bins shall be so arranged that separate and adequate storage of appropriate fractions of aggregate is assured. Each bin shall be provided with overflow pipes, of such size and at such locations as to prevent backing up of material into other compartments or bins. Each bin shall be provided with its individual outlet gate, designed and constructed so that when closed, there will be no leakage and the gates will cut off quickly and completely.

Bins, and access to the sampling areas of bins, shall be so constructed that representative samples can be readily and safely obtained. Separate dry storage shall be provided for mineral filler, when used.

(8) BITUMINOUS CONTROL UNIT

Satisfactory means, either by weighing, metering, or volumetric measurements, shall be provided to obtain the proper quantity of bitumen in the mix within the variation specified. Suitable means shall be provided for checking the quantity or rate of flow of bituminous material into the mixer. An armored thermometer or other approved thermometric equipment shall be fixed in the bitumen feed line at a suitable location near the charging valve at the mixer.

(9) THERMOMETRIC EQUIPMENT

Thermometric equipment shall have an adequate range in temperature reading, shall be accurate to plus or minus 5 degrees Centigrade, and shall be sensitive to a rate of temperature change of not less than 10 degrees Centigrade per minute.

(10) DUST COLLECTOR

The plant shall be equipped with a dust collector constructed to waste or return uniformly to the hot elevator all or any part of material collected.

(11) SCALES FOR HAULING UNITS

Scales shall be furnished by and at the expense of the Contractor. They shall be satisfactory to the Engineer and shall be tested and sealed at the expense of the Contractor prior to their use on the Project and as often thereafter as the Engineer may consider necessary to insure their accuracy. The Contractor shall have on hand not less than ten weights for testing scales.

When measured by the ton, the material shall be weighed on scales of a type capable of weighing complete loads in an unbroken operation. The recording devices of the scales shall be housed in a suitable manner and the scales shall be so located as to facilitate accurate weighing of loads. The scales shall be accurate to one-half of one percent at any weight. Alternate methods or devices for weighing may be acceptable in lieu of platform scales, provided that these methods or devices produce the same degree of accuracy as required of the accepted platform scales.

(12) PLANT SCALES

Scales shall be accurate to 0.5 percent of the maximum load that may be required. Balance weights shall be designed to be locked in any position and to prevent unauthorized change of position.

Scales for any weigh box or hopper may be either the beam or springless dial-type, and shall be of a standard make and design. Scales of the beam type shall have a separate beam with a telltale indicator for each size aggregate and a tare beam for balancing the hopper. the telltale indicator shall start to function when the load being applied is within 50 kg (110 lbs) of the load desired.

Dial scales shall be springless, of standard make, designed, constructed and installed so that they can be maintained free from vibration. They shall be of such size that the numerals on the dial may be read at a distance of at least three meters. The dial shall be of the compounding type having full complements of index points. Pointers so placed as to give excessive parallax errors shall not be used. The scales shall be substantially constructed and, if not capable of maintaining positive adjustment, shall be replaced when so ordered. All dials shall be so located as to be plainly visible to the operator at all times. The Contractor shall have on hand not less than five 25-kg (50-lbs) weights for testing scales. Scales shall be inspected and sealed as often as the Engineer deems necessary to assure continued accuracy.

(13) AUTOMATIC PRINTER SYSTEM

The Contractor may provide an approved automatic printer system in lieu of plant and truck scales, provided the system is used in conjunction with an approved automatic batching and mixing control system. An automatic printer system shall print the weights of materials delivered and such weights shall be shown on a weigh ticket for each load.

The recorded weight shall be accurate to 0.5 percent of true weight. The Engineer may require random loads to be checked on sealed scales.

401.07 BATCHING PLANT

(1) WEIGH BOX OR HOPPER

The plant equipment shall include a means for accurately weighing each size of aggregate in a weigh box or hopper

suspended on scales and of ample size to hold a full batch without hand leveling or running over. The gate shall be close fitting, quick operating, and shall close tightly. No material shall be allowed to leak into the mixer while a batch is being weighed.

The weigh box shall be so designed that the entire batch is discharged quickly and cleanly into the mixing unit. The weigh box shall be open at the top. If an excess of one size of aggregate is introduced into the weigh box, it shall be removed by the operator.

Automatic plants may proportion all aggregate by simultaneous measuring if a weight hopper with a separate compartment for each bin size, calibrated by weight, is used.

(2) BITUMINOUS CONTROL

The equipment used to measure the bituminous material shall be accurate to plus or minus 0.5 percent. The capacity of the bitumen bucket shall be at least 10 percent greater than the quantity of bituminous material required for each batch.

The bituminous material bucket, its discharge valve or valves, and spray bar shall be adequately heated. Steam jackets, if used, shall be efficiently drained, and all connections shall be constructed so that they will not interfere with the efficient operation of the scales. The bitumen bucket shall be a non-tilting type fitted with a loose, sheet metal cover. The bitumen bucket shall be suspended on beam-type scales equipped with a telltale that shows the tare weight of the bucket for each weighing. The net weight of the bitumen shall be measured to plus or minus 0.5 percent of the weight required. The plant shall have an adequately heated quick-acting, non-drip, charging valve located directly over the bituminous material bucket.

The bucket shall be so arranged that it will deliver the heated bitumen in a thin uniform sheet or in multiple streams to the full width of the mixing unit.

The indicator dial shall have a capacity of at least 15 percent in excess of the quantity of bituminous material used in a batch. The controls shall be constructed so that they may be locked at any dial setting and will automatically reset to that reading after the addition of bituminous material to each batch. The dial shall be in full view of the mixer operator. The flow of bituminous material shall be automatically controlled so that it will begin immediately after the dry mixing period is over. All of the bituminous material required for one batch shall be discharged in not more than 15 seconds after the flow has started. The size and spacing of the spray bar openings shall provide a uniform application of bituminous material the full length of the mixer. The section of the bituminous line between the charging valve and the spray bar shall be provided with a valve and outlet for checking the meter when a metering device is substituted for a bituminous material bucket.

(3) MIXING UNIT

The mixing unit shall be an approved type, capable of producing a uniform mixture within the job-mix variation. The mixer box, if not enclosed, shall be equipped with a dust hood that prevents loss of dust.

The clearance of blades from all fixed and moving parts shall not exceed one inch unless the maximum diameter of the aggregate in the mix exceeds 40 mm ($1\frac{1}{2}$ inches), in which case the clearance shall not exceed 40 mm ($1\frac{1}{2}$ inches).

The mixer box shall be equipped with a lock, timing device that accurately controls the mixing cycle.

Control of time shall be flexible, permitting adjustment of cycles up to three minutes in five-second intervals.

401.08 CONTINUOUS MIXING PLANT

(1) AGGREGATE PROPORTIONING

The plant shall include means for accurately proportioning each size of aggregate. Bins shall be equipped with telltale devices that indicate the position of the aggregate in the bins at the lower quarter points.

Each compartment bin being used shall provide a uniform head of aggregate. The plant shall have a feeder mounted under each bin. The feeding units shall provide a uniform flow of aggregate.

Each compartment bin shall have an accurately controlled, individual gate to form an orifice for volumetrically measuring the material drawn from each bin. The feeding orifice shall be rectangular with one dimension adjustable by positive mechanical means, provided by a lock. A cutoff system shall be used which automatically stops mixing operations when the minimum level in the bin has been reached. Each bin shall have an overflow spout to control the top level of the aggregate in the bin.

(2) WEIGHT CALIBRATION OF AGGREGATE FEED

The plant shall include means for calibration of gate openings by weighing test samples. Provisions shall be made so that material coming out of individual orifices may be by-passed to individual test boxes. The Contractor shall provide a platform scale of approximately 250kg (550 lbs) capacity and containers of adequate size for weighing test samples drawn from the gates.

(3) BITUMINOUS CONTROL

The volumetric proportioning device for the bitumen shall be a rotating, positive-displacement, bitumen-metering pump with a satisfactory nozzle arrangement at the mixing unit. The operating speed of the pump shall be synchronized with the flow of aggregate to the mixing unit by an automatic interlocking control. This control shall be capable of easy and accurate adjustment. Means shall be provided for accurately checking the rate of flow of bitumen into the mixture.

(4) MIXER UNIT

The plant shall include a continuous mixer of an approved type, adequately heated and capable of producing a uniform mixture within the job-mix variation.

The mixer shall be equipped with a discharge hopper with dump gates which will permit rapid and complete discharge of the mixture. The paddles shall be adjustable for angular position on the shafts and reversible to retard the flow of the mix. The mixer shall have a manufacturer's plate giving the net volumetric contents of the mixer at the several heights inscribed on a permanent gauge. Charts shall be provided showing the rate of feed of aggregate per minute for the aggregate being used.

The clearance of blades from all fixed and moving parts shall not exceed 25mm (one inch), unless maximum size of aggregate mix exceeds 32mm ($1\frac{1}{4}$ inches), in which case the clearance shall not exceed 38mm ($1\frac{1}{2}$ inches).

The plant shall be equipped with a surge hopper having positive acting gates at the end of the pugmill to provide for discharging the mixture in sufficient quantity to prevent segregation.

401.09 ROADWAY EQUIPMENT

(1) MOTOR GRADERS

Motor graders shall be in good mechanical condition, of adequate tractive power, weighing not less than 20,000 pounds, with a minimum wheel base of 5.4 meters. They shall be equipped with mold boards not less than 3.66 meters in length. Other mechanical methods for leveling and shaping the roadway base section which will secure satisfactory results may be used when approved by the Engineer.

(2) PAVERS

Spreading, shaping and finishing of the surfacing course or courses of bituminized mixture shall be done by one or more self-contained, self-propelled units or pavers, operated in such a manner that no supplemental spreading, shaping or finishing will be necessary to provide the surface smoothness required. Pavers shall contain an integral, activated screed or strike-off assembly, heated if necessary. They shall be capable of spreading and finishing the surfacing course to not less than the full width of a traffic lane and from 2cm ($\frac{3}{4}$ inch) to 15cm (6 inches) in depth, true to line, grade and crown of the section specified by the Plans.

Extension and cut-off shoes shall permit changes in widths by increments of 30 cm (1 foot) or more.

The screed or strike-off assembly shall produce a finished surface of the required smoothness and texture without tearing, shoving or gouging. The unit or paver shall be provided with rolling, tamping, or other suitable devices so as to produce a surface course uniformly dense throughout, smooth and free from inequalities and irregularities.

The paver shall have a receiving hopper of sufficient capacity to avoid decreases in spread while receiving loads, and shall operate efficiently. Unnecessary delays in dumping trucks shall be avoided.

The paver shall include a device for forming beveled edges of the surfacing courses when required.

Pavers shall have power adequate for efficient operation on ascending grades of 7 percent while pushing a loaded truck.

Pavers shall have quick, positive steering ability and operate at speeds commensurate with satisfactory placing of the surfacing course mixture.

(3) TRUCKS

The beds of hauling vehicles shall be tight, clean and smooth. No truck will be permitted on the Project if it has mechanical defects that cause excessive segregation, undue delays or detrimental oil leaks. When necessary, each load shall be covered with canvas or other approved material of sufficient size to protect the mixture from dust, foreign material, or the weather.

(4) ROLLERS

Rollers of both steel-wheel type and pneumatic-tire type will be required. Rollers shall be in good condition, capable of reversing without backlash, and shall be operated at speeds slow enough to avoid displacement of the bituminous mixture. The number and weight of rollers shall be sufficient to compact the mixture to the required density. Vibratory rollers with separate controls for energy and propulsion, and especially designed for bituminous mixture compaction may be used with the express approval of the Engineer. The use of equipment which results in excessive

crushing of the aggregate will not be permitted. Pneumatic tire rollers shall have a minimum contact pressure of 4.3 kg per sq. centimeter (60 PSI) unless a soft mix is encountered or the roller is used as a "breakdown" roller. In such cases, the Engineer may direct that lesser tire pressure be used.

All types of rollers shall be equipped with self cleaning devices and suitable means for evenly watering the roller. Steel surfaces shall be free from flat areas, grooves or projections that would mar the surface of the pavement.

401.10 PREPARATION OF AGGREGATE

(1) GENERAL

Aggregates shall be dried and heated at the plant so that when delivered to the mixing unit they shall be at as low a temperature as is consistent with proper mixing and laying, and in no case to exceed 165C (326 F). Flames used for drying and heating shall be properly adjusted. Heat shall be kept below the point that would cause damage to the aggregate. No unburned oil or carbon residue shall be left on the aggregate.

Drying shall continue for a sufficient time and at a sufficiently high temperature, consistent with this Specification, to cause the aggregate to become throughly surface dry. If the bituminized mixture contains evidence of excessive moisture, the operation of the plant shall be regulated in such a manner that the aggregate can be properly dried. The existence of one or more of the following conditions will be construed to mean that the aggregate is not properly dried:

(a) Foaming on the surface of the coarse aggregate particles.

(b) Excessive slumping of the mix in the truck.

(c) Condensed water dripping from the truck box.

(d) Bubbles or blisters forming on the surface immediately behind the paver.

The Engineer will require the moisture content to be lowered if excess moisture is indicated by any of conditions in a, b, c, d, above. Immediately after heating and drying, the aggregates shall be screened and conveyed into separate compartments ready for batching and mixing with bituminous material. Aggregate for Type 2 and 3 shall be separated into two or more fractions, as specified.

All aggregates shall be stored in a manner that controls the temperature within the limits prescribed for mixing and also prevents accumulation of moisture. Additional natural materials (not mineral filler), if required to meet the grading requirements, shall be proportioned and blended with the aggregate before being screened into the separated bins. This natural material may be added to the aggregate at the mixing plant by premixing it thoroughly with the other fine aggregates or by feeding it into either the hot or cold elevator. Spreading this natural material over the tops of the aggregate piles or dumping it into the hoppers at crushing plants will not be permitted.

Aggregate shall be delivered to the plant from a stockpile or stockpiles prepared before mixing operations. Stockpile construction shall be done in accordance with the provisions of Section 310. The quantity of stockpiles material shall be sufficient for at least one day of mixing plant operations. The mixing plant shall not be charged with aggregates coming directly from crushing or screening plants or combinations of these plants.

The aggregate for the bituminous mixture will be sampled for testing after drying and before bituminizing. Should

there be any oversize material or an excess of material passing the 0.075mm (No. 200) mesh sieve, the mixing plan shall be so regulated that the oversize material and excess fine materials can be removed prior to preparing the bituminous mixture.

(2) TYPE 1 PLANT MIX SURFACING

Aggregate for Type 1 plant-mix surfacing shall meet the requirements of Section 401.02. The aggregate shall be heated, dried and otherwise prepared as specified in Section 401.10(1), except that separation into fractions is not required.

(3) TYPE 2 PLANT MIX SURFACING

Aggregate for Type 2 plant-mix surfacing shall meet the requirements of Section 401.02.

After the aggregate has been heated and dried and otherwise prepared as specified in Section 401.10(1), it shall be separated by screening on the 4.75 mm (No. 4) screen. The two sizes shall later be combined in the directed proportions upon charging the mixing unit.

(4) TYPE 3 PLANT MIX SURFACING

Aggregate for Type 3 plant-mix surfacing shall meet the requirements of Section 401.02.

After the aggregate has been heated and dried and otherwise prepared as specified in Section 401.10(1), it shall be separated by screening into at least three sizes and stored in separate compartments. At least one of the bins shall contain material passing the 2.0mm (No. 10) sieve. The other separations of the aggregate shall be between such limits as may be necessary to produce the mixture specified.

01.11 PREPARATION OF BITUMINOUS MIXTURE

1) GENERAL

The hot aggregate shall be accurately measured and conveyed into the mixing unit in the proportionate quantities of each aggregate required to meet the specified grading. The aggregate shall be introduced into the mixing unit at a temperature of :

(a) Not more than 110C(225F) when cutback liquid asphalt is used; and

(b) Not more than 162C (325F) when asphalt cement or slow curing liquid asphalt is used.

IN NO CASE shall asphalt be introduced into the mixing unit at 14C (25F) degrees or more below the temperature of the aggregate. The bituminous mixture, immediately after mixing, shall be within the temperature range specified in the data on "Temperature-Viscosity" furnished for the bituminous material used. Mixing shall produce a homogenous mixture in which all aggregate particles are thoroughly and uniformly coated.

A mixture will be considered unsatisfactory if it shows an incorrect quantity of asphalt, has been injured or damaged by burning, is improperly mixed, or does not meet specification requirements after mixing. An unsatisfactory mixture shall be disposed of before placement, or removed and replaced if detected in the roadway, except that unsatisfactory material inadvertently placed in the roadway may be accepted if the quantities are small or the material is not detrimental to the roadway. Removing, replacing or disposing of unsatisfactory material shall be at no cost to the HA.

(2) MIXING TIME

(a) BATCH PLANT

The mixing unit shall be charged with aggregates and dry mixed for a period of 5 to 10 seconds. After dry mixing, the bituminous material shall be added and the mixing continued for a period of at least 25 seconds. The mixing time is defined as starting when the asphalt is first added, and stopping when the completed mixture discharges from the mixing unit.

(b) CONTINUOUS PLANT

Mixing time shall not be less than 35 seconds.

Mixing time is defined as capacity of pugmill in kilograms divided by pugmill output per second.

401.12 CONSTRUCTION METHODS

(1) BASE PREPARATION

Preparation of the existing surface shall be performed in accordance with the pertinent requirements of Section 300.

(2) PRIME COAT

When a prime coat of approved bituminous material is determined to be necessary, it shall be applied, prior to application of the plant mix material, at the rate directed.

The plant-mix bituminous surfacing course shall not be placed until the prime coat has cured a minimum of 24 hours, or longer if directed.

Plant-mixed bituminous surfacing material shall not be placed on any primed surface that contains an excessive percentage of moisture, as determined by the Engineer.

3) PROTECTION OF TRAFFIC AND ROADWAY STRUCTURES

(a) Traffic protection shall be performed in accordance with Section 105.03.

(b) Protection of highway structures shall be performed in accordance with Section 407.08.

(c) All equipment shall be removed from the road at the conclusion of the day's work.

4) TRANSPORTATION AND DELIVERY OF MIXTURE

The bituminous mixture shall be transported in pneumatic-tired vehicles.

5) SPREADING AND FINISHING

Placing of the mixture shall be done on an approved surface. The mixture shall be spread, with pavers, over the entire width or such partial width as may be practicable. Material for shoulder widening may be placed with other approved equipment.

Whenever the planned compacted thickness of a plant-mix bituminous surfacing course is 5 centimeters (2 inches) or less, it shall be constructed in one course, unless specified otherwise on the Plans or Proposal. A planned, compacted thickness of more than 5 centimeters (2 inches) shall be constructed as directed.

The Engineer will establish horizontal alignment controls for spreading each course. The Contractor shall set a string based on this control, and cause one edge of the first lane of each lift of surfacing to follow the string.

Certain areas to be paved may be too small or too irregular in shape to accommodate a paver. In addition, it may be impossible to operate a paver properly in areas adjacent to manholes, inlets, curbs or walls. In such cases, plant-mix

material shall be spread by motor grader, by specia pavers, or by hand methods. Compaction of mix in sucl areas shall be done as directed. The compaction equipmen used shall be small, self-propelled rollers, trench rollers vibratory tampers, heavy hand rollers, or similar, approvec compactors.

Hauling over any plant-mix surface course will not be permitted until the mixture has been properly compactec and has cooled to atmospheric temperature.

(6) JOINTS

Placing of each course shall be as continuous as possible. The width of each course shall be adjusted so that longituc joints are offset by at least 15 centimeters (6 inches) in vertical planes. Transverse joints shall be offset at least 7 meters (20 feet) in vertical planes.

Longitudinal and transverse joints shall be formed with reasonable care and good workmanship. Ridges or depressions at joints that exceed the surface tolerance shall be Joints with accumulations of mud, dust or other foreign mat foreign matter shall be cleaned or trimmed back as directed before placing the adjoining material. The exposed face of all joints, except those formed by echelon paving, (paving with two or more pavers working together with one slightly behind and to one side of the other), shall have a coat of SS 1 emulsified asphalt or other approved bituminous material applied just before placing the abutting course.

Longitudinal joints in the top course of plant mix shall be constructed at the center line or lane line. If those locations are not practicable, the joint may be constructed near the center of the lane by paving in echelon or outside of the lane lines, if directed.

A transverse joint shall be made in a course if laying of that course is to be discontinued long enough to let the mixture become cold. The transverse joint may be formed or cut, but shall result in a vertical face the full depth of the course. Material that is cut away to make the vertical face shall be removed; the joint face shall be brushed with asphalt and the fresh mixture compacted against the joint face when paving is resumed.

The end of a course that is temporarily subjected to traffic shall be beveled at the approximate ratio of 20 horizontal to 1 vertical. When paving of the course resumes, a transverse joint shall be made through the full depth of the course. The beveled portion shall be removed. Joints at bridge ends or other rigid structures shall be made by first conditioning and compacting the existing base. The mixture shall be placed slightly higher than the structure. Compaction shall be in a transverse direction as well as longitudinal, and as directed.

') COMPACTION

(a) GENERAL REQUIREMENTS

Unless otherwise directed, rolling shall start at the sides and proceed parallel toward the center of the lane or high side, overlapping on successive trips by at least one-half of the rear wheel, or two rear wheels in the case of a pneumatic-tired roller.

The speed of rollers shall not exceed 8 kilometers (5 miles) per hour. Rollers shall not displace the mixture or be operated in a hazardous manner.

Rollers shall be kept in continuous operation, as nearly as practicable, in such a manner that all parts of the pavement shall receive substantially equal compaction.

Stops or reversal of direction shall not be made in the same transverse location of each pass. Displacement occurring from any cause shall be corrected at once by use of fresh mixture and hand-raking and smoothing.

(b) PROCEDURE

Compaction shall be performed in three phases and in the following sequence, unless changed by the Engineer. The number of complete coverages specified for each phase shall be increased, if directed.

The density of the freshly compacted pavement may be checked occasionally to aid in establishing a rolling sequence that will achieve satisfactory density while the mix is within the temperature range specified.

Phase 1 Initial or "breakdown" rolling with a smooth, steel-wheeled roller.

Phase 2 Intermediate rolling with self-propelled, pneumatic-tired roller.

Phase 3 Finish rolling with an approved steel-wheeled roller.

Phase 1 — Initial rolling shall be done as soon as the mixture can support the roller without undue displacement, transverse cracking or hairline checking.

Initial rolling, if done with a nonvibratory steel-wheel roller, shall progress with the drive wheel forward in the direction of paving. When excessive grade is encountered, the tiller wheel may be placed forward in the direction of paving.

Initial rolling shall consist of at least one complete coverage over the surface.

Phase 2 — Intermediate rolling shall follow initial rolling as soon as possible. Intermediate rolling shall continue on each lift until a minimum of three complete coverages has been accomplished while the temperature of the mix being rolled is above 71C (160F) degrees.

Phase 3 — Finish rolling shall begin immediately after intermediate rolling and continue until all roller marks are eliminated or until the Engineer determines that sufficient rolling has been done.

(8) PAVEMENT REPAIR

If repairs are made by cutting out the pavement, the sides and bottom of the hole shall be cleaned and brushed with an approved, bituminous material. Fresh mixture shall then be placed into the hole, compacted and leveled to meet the required surface smoothness.

(9) SURFACE SMOOTHNESS

The finished surface shall be of uniform texture, conform to the grade and typical section, and shall have a smooth riding quality.

The finished surface shall be free from defects and depressions exceeding 5mm (3/16 inch), as measured with a 3-meter straightedge placed parallel to the center of the roadway.

Unsatisfactory work shall be repaired or replaced.

401.13 METHOD OF MEASUREMENT

The plant-mixed surfacing materials will be measured by the ton, on approved scales, after complete mixing of all ingredients. The pay weight will include the bituminous material and any mineral filler contained in the mixture.

401.14 BASIS OF PAYMENT

(1) Plant-mixed surfacing material, used in the completed and accepted work, will be paid for at the contract unit price bid per ton. This price and payment, except as may be otherwise specified, will be full compensation for the work.

(2) Existing surface preparation, unless otherwise specified, will not be paid for separately but will be included in payment made for the other items of the contract and shall include all operations necessary to complete the work.

SECTION 402 BITUMINOUS BASE COURSE

402.01 DESCRIPTION

The plant-mix bituminous base course shall be composed of a mixture of aggregate, filler if required, and bituminous material. It shall be mixed in a central plant, spread and compacted on an approved surface in reasonably close conformity with the lines, grades, thicknesses, and typical cross sections shown on the Plans or established by the Engineer.

402.02 COMPOSITION OF MIXTURES

The Engineer will establish all job-mix formulas. At least 15 days prior to mixing operations, the Contractor shall submit representative samples of the proposed plant-mix aggregates and mineral filler to the HA laboratory for analysis and design of the job-mix formula. These samples shall meet the requirements of Section 401.04, Table I or Table II, and of Section 401.05, before the Engineer will design the job-mix formula. Any delays due to the Contractor's failure to submit acceptable samples will be his responsibility.

The maximum permissible variations from the job-mix formula are as shown for each type of plant mix. The permissible variation from the job-mix formula does not permit the use of any mix which is outside the specification limits, through the application of the variation.

402.03 MATERIALS

(1) BITUMINOUS MATERIAL

Bituminous material shall meet the requirements of Section 407 for the type and grade specified in the contract. The Engineer may change the grade two steps at no change in unit price.

Bituminous tack and prime material, if required, shal meet the applicable requirements of Section 403.

(2) AGGREGATE

Aggregate shall meet the provisions of Section 303 anc the following requirements :

(a) The material, from which the aggregate is to be produced, shall have a wear factor not to exceed fifty percent at five hundred revolutions, as determined by AASHO Test Method T 96.

(b) The portion of the total aggregate passing the No. 40 sieve shall have a liquid limit of not more than 25 and a plasticity index of not more than six, as determined by AASHO Test Method T 89 and T 90 respectively

(c) Dust Ratio. The portion passing the 0.075mm (No. 2 sieve shall not be greater than two-thirds (2/3) of the portion passing the No. 0.425mm No. (40) sieve.

(d) Aggregate for plant-mix bituminous base course shall meet the gradation requirements of the table below, including the mineral filler when used.

SIEVE SIZE	PERCENT PASSING BY WEIGHT	
	GRADE I	GRADE II
No. 37.5mm (1½ inches)	100	—
No. 25mm (1 inch)	90-100	100
No. 4.75 mm (No. 4)	35-65	35-65
No. 0.075mm (No. 200)	3-10	3-10

The point of acceptance for the aggregate will be after drying but before bituminizing.

402.04 CONSTRUCTION REQUIREMENTS

(1) GENERAL

The plant-mix bituminous base shall be constructed in layers not exceeding 15cm (6 inches) compacted thickness, unless otherwise specified. A tack coat shall be used between layers when the base course is constructed in more than one layer.

(2) EQUIPMENT

The central mixing plant shall be a batch or continuous-flow type meeting the requirements of Section 401.06, except that intermediate screening or bin storage will not be needed.

Motor graders, rollers, pavers and trucks shall meet the applicable provisions of Section 401.09.

(3) PREPARATION OF AGGREGATE

Aggregate shall be prepared in accordance with Section 401.10, except that dried and heated aggregates may be transferred from the dryer directly to the mixing unit. If the gradation of aggregate materials cannot be continuously maintained within the specified gradation limits, aggregate gradation controls shall be used.

(4) PREPARATION OF BITUMINOUS MIXTURES

Bituminous mixtures shall be prepared in accordance with the requirements of Section 407.

402.05 PLACING AND COMPACTING

The plant-mix base material shall be laid upon an approved surface, spread and struck off to the grade and elevation established. Bituminous pavers or other approved laydown equipment shall distribute the mixture over the entire width or over such partial width as may be practicable.

The bituminous mixture shall be thoroughly and uniformly compacted by rolling immediately after it is spread and struck off. In no case shall less than two rollers be furnished. The number of rollers shall be increased, when directed, to keep pace with production. One of the rollers shall be a self-propelled, pneumatic-tire roller. A steel-wheel roller shall also be used, if directed. Rolling shall be continued while the mixture is in a workable condition until all roller marks are eliminated and a density of at least 95 percent of a test specimen is obtained. The test specimen will be prepared in the field in like proportions to the mix being used and tested in accordance with Test Method AASHO T 166.

402.06 SURFACE TOLERANCE

The finished surface shall be free of defects or depressions exceeding 1 cm (3/8 inch) as measured under a 3-meter (10 feet), straightedge place parallel to the roadway centerline. All work not meeting surface tolerance requirements shall be corrected as directed.

402.07 METHOD OF MEASUREMENT

Plant-mix bituminous base course will be measured as specified in Section 401.13.

402.08 BASIS OF PAYMENT

The accepted quantities of plant-mix bituminous base course, measured as specified, will be paid for at the contract unit price for each ton of bituminous base mixture.

"Existing Surface Preparation," if used, will be paid for as specified in Section 401.14. Bituminous material used in the accepted plant-mix bituminous base course will not be paid for separately, but prime or tack coat will be paid for accordance with Section 407 at the contract unit price.

SECTION 403 BITUMINOUS PRIME OR TACK COAT

403.01 DESCRIPTION

This work shall consist of preparing and treating an existing surface with bituminous material and blotter material if required, in substantial conformity with these Specifications and the Plans.

Tack coat shall be the application of bituminous material to a previously constructed surface of any type, in preparation of placing bituminous surfacing materials.

403.02 MATERIALS

(1) BITUMINOUS MATERIAL

The type and grade of bituminous material will be specified in the contract or shown on the Plans and shall meet the requirements of Section 407.

The Engineer reserves the right to change or substitute the type and grade of bituminous material to be used, depending on seasonal or other conditions. In case of such change or substitution, the basis of payment will be in conformity with Section 407. The grade may be changed one step, by the Engineer, at no change in unit price.

403.03 WEATHER LIMITATIONS

Prime coat may be applied only during daylight hours, except as approved by the Engineer.

Neither prime nor tack coat may be applied when the Engineer determines that weather or roadway surface conditions are unfavorable to achievement of satisfactory results.

403.04 EQUIPMENT

Equipment shall meet the requirements of Section 401.09

to the extent required for satisfactory accomplishment of the work.

403.05 CONSTRUCTION METHODS

Construction shall be performed in accordance with Section 404.04, except that the third sentence of the second paragraph of Section 404.04 (3), referring to thickness of pavement course, does not apply.

Amounts of bitumen to be applied and rates of application shall be as directed by the Engineer in accordance with on-the-job determinations of the particular work requirements. Prior to the application of the prime coat upon an aggregate base, if, in the opinion of the Engineer, the surface has become too dry, water shall be applied to the surface at a rate designated by the Engineer. Bituminous material shall not be applied when surface or weather conditions would prevent proper application.

When SS-1 Emulsified Asphalt is called for on the Plans, it shall be applied as directed by the Engineer and at a rate not to exceed 0.45 liter per square meter (0.1 gal. per sq. yd.). The proportions of water and emulsified asphalt blended for application may vary from one to three parts of water with one part of emulsified asphalt, the exact proportion to be determined during construction by the Engineer. The distribution unit shall conform to the requirements specified in Section 404.03 (1), and the SS-1 Emulsified Asphalt shall conform to Section 407 and references made therein.

The exact quantity of asphalt may vary and will be determined by the Engineer.

Prime coat shall not be applied to any aggregate surface that contains an excessive percentage of moisture, as determined by the Engineer.

(1) BLOTTER MATERIAL

The Contractor shall spread blotter material to surfaces covered by bitumen in areas and within the time designated by the Engineer. Spreading shall be done by approved methods.

Blotter material shall meet the requirements for Screening in AASHO Designation M 75.

Surplus blotter material, resulting from any spreading method, shall be swept from the blotted surface by power brooming, hand brooming or blowing before placing other bituminous surfacing courses over the blotted areas. The surplus material swept from the blotted surface shall be removed from the site unless otherwise directed by the Engineer. Surplus blotting material that is allowed to foul drainage structures, including open ditches and curb gutters, shall be removed by the Contractor at his expense, and the drainage structure cleaned.

The quantity of blotter material specified in the contract is separate from other quantities of like sized surfacing aggregates and is not guaranteed to be used or required.

(2) MAINTENANCE OF SURFACE

The Contractor shall maintain the prime- or tack-coat surface intact until it has been covered with subsequent surfacing. All breaks, holes, failures, deterioration or disintegration of the underlying course or courses of surfacing, from any cause, shall be satisfactorily repaired. Repairing these defects, including any materials necessary, will not be paid for directly but will be considered included in the bid items of the contract.

403.06 PROTECTION OF TRAFFIC AND HIGHWAY STRUCTURES

Traffic protection shall be performed in accordance with Section 105.03. Highway structures shall be protected as specified in 407.08. When so directed by the Engineer, not more than one-half of the width of the roadway shall be treated in one application. Care shall be taken that the application of bituminous material in any area is not in excess of the specified amount. Excess bituminous material shall be squeegeed from the surface. Skipped areas or deficiencies shall be corrected. Building paper shall be placed over the end of the previous applications and the joining application shall start on the building paper. The used building paper shall be removed from the site of the work.

403.07 METHOD OF MEASUREMENT

Bituminous material and emulsified asphalt will be measured in accordance with Sections 407.05, 407.09, 407.14.

Blotter material, used in the completed and accepted work, will be measured in tons or cubic meters. Measurement will be made in accordance with the applicable provisions of Section 404.06, or truck measurement will be used if the Engineer so determines.

403.08 BASIS OF PAYMENT

Bituminous material will be paid for at the contract unit bid price in accordance with Section 407.09.

Emulsified asphalt will be paid for in accordance with Section 407.14.

Payment for blotter material will be made by the ton or the cubic meter.

SECTION 404 BITUMINOUS SURFACE TREATMENT

404.01 DESCRIPTION

Bituminous surface treatment shall consist of one or more applications of bituminous material on a properly prepared roadway surface. Each application, unless specified otherwise, shall be covered with aggregate surfacing material in conformity with these requirements and the Specifications and Plans.

404.02 MATERIAL

(1) Bituminous material shall be medium-curing liquid asphalt, MC-800, conforming to the requirements of AASHO M 82. The bituminous material shall be sampled and accepted in accordance with the procedures of Section 407 of these Specifications, except that the samples will be obtained from the distributor or from the storage tank if one is provided for the exclusive use of this project.

(2) Aggregate material for covering the bituminous material shall be the type and grade stipulated in the Table below. Aggregate shall consist of crushed stone of uniform quality, free from dirt, clay balls, organic materials and other extraneous matter. Aggregate shall have a percent of wear not greater than 40 at 500 revolutions as determined by AASHO Designation T 96. Aggregate shall meet the stripping requirements of AASHO T 182.

SIEVE DESIGNATION	Percent by weight passing square mesh sieve, AASHO Designations, T 11 & T 27 GRADATION A 1st Application	GRADATION B 2nd Application
25mm (1 inch)	100	—
19mm (3/4 inch)	90 - 100	—
12.5mm (1/2 inch)	40 - 55	100
9.5mm (3/8 inch)	20 - 30	85 - 100
4.75mm (No. 4)	0 - 10	10 - 40
2.36mm (No. 8)	0 - 5	0 - 10

404.03 EQUIPMENT

The Contractor shall maintain on the Project throughout the course of the work the following equipment:

(1) DISTRIBUTOR

One fully operable, bituminous material pressure distributor of at least four thousand liter (one thousand gallon) capacity, with tanks insulated and equipped with internal steam coils or equivalent heating facilities. The distributor shall be fully equipped with a spray bar of the full, circulating type at least 3 meters (10 feet) in length. Sufficient extensions, 30cm (1 foot) and 60cm (2 ft) in length, shall be provided so that the bar may be extended to a length of 8 meters (24 feet). The bar shall be constructed to allow for vertical adjustment of the nozzles to the desired height above the road surface to allow adjustments to conform to the roadway crown, and to permit lateral shifting of the entire spray bar during operation. The spray bars and nozzles shall be constructed so as to prevent clogging of the nozzles during intermittent operation and provide

positive and immediate cutoff when distribution of the bitumen ceases, thus preventing dripping of the bitumen from the bar. The nozzles attached to the bar shall be of an approved flat-slotted type. The valves which control the flow nozzles shall be of positive acting design to provide a uniform, unbroken spread of bitumen on the surface.

The distributor shall be equipped with devices and charts to provide for accurate, rapid determination and control of the amount of bitumen being applied per square meter of surface and an odometer of the fifth-wheel type indicating speeds in meters per minute. The pressure pump shall be powered independently from the propelling motor of the vehicle. The distributor shall be equipped with a pressure pump, pressure gauge, thermometer well, thermometer, and an accurately calibrated fluid-content gauge. It shall be equipped with pneumatic tires and shall be adequately powered to perform the necessary work without assistance from other units. In addition, the distributor spray bar shall be so arranged that its height above the roadway, as set, shall remain constant throughout the application of bituminous material to the surface.

The distributor shall be capable of applying the bituminous material with an allowable variation, from any specified rate, of not to exceed 0.1 liters per square meter (.022 gallons per square yard).

HEATING EQUIPMENT

Devices capable of heating bituminous material to the required application temperature.

ROLLERS

Rolling equipment meeting the applicable requirements of Section 401.09(4).

(4) AGGREGATE SPREADER

One aggregate spreader of approved design supported by at least 4 wheels equipped with pneumatic tires on two axles. The aggregate spreader shall be equipped with a means of applying the larger cover coat material to the surface before applying the smaller cover coat material. The spreader shall have positive controls to insure that the required amount of material is deposited uniformly over the full width of the bituminous material.

(5) CLEANING EQUIPMENT

For cleaning the roadway surface. Equipment may consist of efficient power brooms, blowers and suitable hand brooms.

(6) WATERING EQUIPMENT

Conforming to the applicable provisions of Section 307.

(7) SCALES

Meeting the applicable requirements of Section 401.06.

404.04 CONSTRUCTION METHODS

(1) APPLICATION OF MATERIALS

Bituminous surface treatment may be single course (SBST) or double course (DBST) as called for on the Plans or in the Supplementary Specifications. The rates of application shall be as follows:

FIRST COURSE — Bituminous material shall be applied at the rate of 2.26 liters per square meter (1/2 gallon per square yard). Aggregate, Gradation A, shall be applied at the rate of 27 kilograms per square meter (5.5 lbs per square foot).

SECOND COURSE — Bituminous material shall be applied

at the rate of 0.90 liters per square meter (0.2 gallon per square yard). Aggregate, Gradation B, shall be applied at the rate of 11 kilograms per square meter (2.2 lbs per square foot).

(2) EXISTING SURFACE PREPARATION

Surface preparation shall be done in accordance with the provisions of Section 203.06, if the work is done on new embankment. If the work is done on the modified roadbed of an existing road, the provisions of Section 306 shall apply.

Attention is directed to the condition that stability and riding quality of the completed bituminous surface treatment are dependent on the careful preparation and smoothness of the aggregate surface to which the treatment is applied. The entire course of surface aggregate to which the bituminous surface treatment is applied shall not be laid down and prepared until such time as weather and other conditions will permit the immediate application of the bitumen. It is the intent of this Specification that the Contractor shall not place any cover aggregate upon the roadway until such a time that he can complete the paving operation without interruption. If the paving operation cannot be completed, the cover aggregate may be stockpiled.

(3) SWEEPING

Immediately prior to the first application of bituminous material, the roadway surface shall be swept clean of all dust, dirt or foreign matter by means of a power broom, blower, or hand broom as required for satisfactory cleaning of the surface.

If directed, a light, uniform application of water shall be applied to the roadway surface just prior to application of

the bitumen. Equipment shall conform to Section 307. The top five centimeters (2 inches) of the course shall not contain more than three percent of moisture by weight of aggregate. If determined necessary by the Engineer, as a measure of surface consolidation, a prime coat of bituminous material shall be applied, at the rate directed, prior to the initial application of bituminous surface treatment.

(4) APPLICATION OF BITUMEN

Immediately following the cleaning and wetting of the roadway surface, the first application of bitumen shall be uniformly applied at the temperature and at the rate per square meter, as directed, by means of a pressure distributor of the type described in Section 404.03(1). Extreme care shall be taken in application of the bitumen to secure uniform surface cover and true lines. Weather conditions shall be considered so that the bitumen will not become set before the cover material can be spread and rolled.

Work shall not be started without consent of the Engineer and shall be promptly terminated in the event of rain, high wind velocity, or the occurrence of unfavorable road or weather conditions.

(5) APPLICATION OF COVER AGGREGATE

When directed by the Engineer, the first application of bitumen may be allowed to remain uncovered for a period of time up to sixty minutes. Spreading of a minimum amount of cover aggregate shall be made on the freshly spread bitumen when the Engineer determines that the maximum depth of downward penetration has been attained and that the consistency of bitumen has become such that the best "keying" results will be obtained. In the case of heavy viscosity types of bituminous materials, the Contractor

shall not proceed with the application of bitumen until a supply of aggregate sufficient to cover the entire application is immediately available for covering the bitumen in less than five minutes. The bitumen application shall be covered with the specified cover aggregate at the directed rate per square meter, spread uniformly over the bitumen with a self-propelled or truck-mounted mechanical spreader of the type hereinbefore specified. Aggregate spreaders that fail to make a uniform and satisfactory distribution of material must be promptly removed from further use. Special care must be exercised in the spreading of cover aggregate to insure uniformity of cover and security of longitudinal lines.

When directed by the Engineer, water shall be applied to cover aggregate at least three days prior to spreading on the bituminous material.

When directed by the Engineer, brooming, by mechanical or hand methods, shall be employed to provide uniform distribution of the cover aggregate. Particular caution shall be exercised in brooming to avoid displacement or loosening of cover aggregate particles from the bitumen.

Bituminous material shall not be applied in areas where the uncovered bitumen has cooled to the extent that the maximum amount of cover material will not be keyed.

Bitumen shall be applied with care in order that transverse and longitudinal joints or lines of successive applications will be smooth and consistent with adjacent completed surfaces.

Longitudinal laps may be from 15 to 25cm (6 to 10 inches) in width, but there shall be no overlap at the end junction of application. In order to prevent lapping at transverse junctions, the distributor shall be promptly shut off, and, if necessary to prevent dripping, a drip pan shall be

inserted under the nozzles when the application begins to thin. Before continuing the application of the bitumen, building paper shall be spread over the treated surface for a sufficient distance back from the joint on the cover aggregate so that the sprayers are operating at full force, and the distributor has attained the predetermined speed upon reaching the surface to which application is to be made. The bitumen application shall be stopped or shut off on paper. Any paper used for covering joints shall be removed from the site of the work.

All transverse joints shall be covered with aggregate and broomed back before the next longitudinal application of bitumen is made. Traffic, including trucks hauling covering material to the spreader units, shall not be permitted to cross over or drive on any uncovered bituminous material, including lines. When operating over freshly spread, cover aggregate, the speed of vehicular traffic shall be so regulated that loosening and displacement of cover aggregate shall not occur.

Drivers failing to observe these requirements shall be promptly dismissed from the work. When it is necessary to cover lines to permit trucks or traffic to cross over, aggregate shall be neatly broomed back, exposing the full width of the line before the abutting application of bitumen is made.

There shall only be permitted a minimum number of lines, compatible with the width of the roadway surface. Permission may be granted by the Engineer to make full road-surface width application of bitumen and cover aggregate, to be performed in a single continuous operation so coordinated that the movement of public traffic will not suffer greater inconvenience than that resulting from strip or half-roadway width methods.

(6) ROLLING

Rolling of cover aggregate shall start immediately after spreading. All freshly spread material shall be rolled without delays. Rolling shall be accomplished with pneumatic-tire rollers capable of a ground contact pressure of not less than 3.5kg/cm² (50 psi) nor more than 6.7kg/cm² (95 psi). Rolling shall proceed in a longitudinal direction beginning at the outer edges of the treatment and working toward the center, each pass overlapping the prior pass by about half the width of the roller. The first rolling of the aggregate must be completed within one-half hour after it has been spread. All rollers shall be self-propelled and two rollers must be used for each aggregate spreader used. The rolling shall be continued until a smooth, thoroughly compacted surface has been obtained. The speed and reversal of direction of movement of rollers shall be so regulated as to avoid displacement or loosening of cover material.

(7) CURING TIME AFTER FIRST APPLICATION

After the rolling is complete and the surface is smooth and free of ruts and ridges, the surface may be opened to traffic, subject to traffic protection requirements of the Special Provisions.

The surface shall be allowed to cure for a minimum period of five days and longer, if necessary, as determined by the Engineer, for the surface to become satisfactorily cured for placement of the succeeding course. Any breaks or holes that develop in the treated surface shall be repaired immediately with bituminous treatment methods or a premixed bituminous aggregate. Any areas showing excessive bitumen shall be covered with aggregate and rolled. Cost of any such repairing required will not be

paid for directly but will be included in the other bid items in the contract.

(8) CLEANING

After the first application of bitumen and cover aggregate has satisfactorily cured and set, and any repairs required have been properly made, all excess cover aggregate, dirt, dust and foreign materials shall be removed from the surface. This shall be accomplished by sweeping with power brooms, hand brooms, blowers, or water washing to produce a clean surface. Construction of the succeeding course may then proceed on the clean surface.

(9) COMPLETION

Upon completion of the final course, the surface shall be opened to traffic for a period of three days. All regulations pertaining to traffic control shall remain in effect. During this period, the surface shall be maintained by brooming and rolling, as directed. Any holes or breaks that may occur shall be satisfactorily repaired by methods hereinbefore specified. Any areas showing excess bitumen shall be covered with aggregate and rolled. Any irregularities influencing the stability and riding quality of the surface shall be corrected in a satisfactory manner. Cost of any such repairing or corrections will not be paid for directly but will be included in the other bid items in the contract.

404.05 PROTECTION OF TRAFFIC AND HIGHWAY STRUCTURES

(1) TRAFFIC PROTECTION

This work shall be performed, unless otherwise stipulated, in accordance with Section 105.03.

(2) STRUCTURE PROTECTION

The Contractor shall provide whatever protective covering may be necessary to protect the exposed portion of bridges, culverts, curbs, gutters, guard fences, road signs and other roadside structures from becoming splashed or sprayed with bitumen. He shall remove from such structures any bitumen, dirt or other undesirable matter that may come upon them by reason of his operation. Compensation for this protection will be included in the unit price bid for the application of bituminous material.

The Contractor shall repair, at his own expense, any damage done to the highway or structures due to the operation of his equipment or caused by traffic being forced away from the usual line of travel.

404.06 METHOD OF MEASUREMENT

(1) BITUMINOUS MATERIAL

Bituminous material used in the completed and accepted work will be measured in accordance with Sections 407.05, 407.09, 407.14.

(2) COVER AGGREGATE

Cover aggregate used in the completed and accepted work will be measured by the ton on scales furnished by the Contractor, or by the cubic meter measured in the vehicle at the point of delivery on the roadway.

404.07 BASIS OF PAYMENT

Bituminous material, cover aggregate, rolling, watering and other items specified in the contract will be paid for at the contract unit price bid in the Proposal, which price and payment will be full compensation for furnishing all material,

unless otherwise indicated, for delivering, preparing, handling and placing all materials for maintenance of the completed surface until acceptance and for all other operations necessary to complete the work.

Existing surface preparation will be paid for under the provisions of Section 203.08 or Section 306.05, whichever is appropriate.

On projects in which bituminous surface treatment is a separate contract, existing surface preparation shall be performed in accordance with Section 306.02 and, unless otherwise specified, the work required for existing surface preparation will be paid for under the provisions of Section 306.05.

SECTION 404.50 PENETRATION AGGREGATE SURFACE COURSE

404.51 DESCRIPTION

Penetration aggregate surface course shall consist of the construction, on a previously prepared base course, of a pavement surface of washed gravel or broken stone penetrated with a hot application of bituminous binder.

404.52 MATERIALS

Large aggregate shall be 25mm-(1 inch) size broken stone or washed gravel. Cover material shall be 9.5mm-(3/8 inch) size broken stone or washed gravel.

Broken stone, and gravel shall conform to the requirements specified in Section 303.02.

Large aggregate of both gravel and broken stone shall not be used on the same Project except when and as approved by the Engineer.

Bituminous binder shall be asphalt cement, Penetration Grade 120-150, conforming to the requirements Section 407.

404.53 EQUIPMENT

The provisions of Section 404.03 will apply.

404.54 METHODS OF CONSTRUCTION

The surface course shall be constructed on a previously constructed base course which shall be dry, free from loose or adhering foreign materials, and properly finished at the time the surface course is placed thereon.

The 25mm-(1 inch) size aggregate shall be spread on the base course to such a depth that the surface course, when completed, will have at least the prescribed thickness and will

not exceed the prescribed thickness by more than 15mm ($\frac{1}{2}$ inch). The large aggregate shall be spread by self-propelled stone spreaders equipped with a strike-off bar or screed capable of being adjusted to the required grade and crown. After being spread, the aggregate shall be kept clean and protected from coatings of foreign materials.

Not more than sufficient aggregate for a day's work shall be spread in advance of rolling and application of bituminous binder, unless otherwise approved by the Engineer. After spreading, the aggregate shall be rolled longitudinally with a 3-wheel, power-driven roller, weighing not less than 10 metric tons and having a load on the rear wheels of not less than 53.5 kg/cm (330 lb/in.) of width of the wheels, until it is properly compacted to the prescribed grade and contour. Before the application of bituminous binder, any depressions or projections in excess of the tolerances hereinafter specified for the completed surface shall be corrected.

Bituminous binder shall be applied to the large aggregate by pressure-distributing trucks conforming to the requirements of Section 404.3(1). The rate of application for a prescribed 5cm-(2 inches) thickness of surface course shall be between 6.8 and 8.2 liters per square meter (1.5 and 1.8 gallons per square yard) if broken stone is used. It shall be between 4.5 and 6.8 liters per square meter (1.0 and 1.5 gallons per square yard) if gravel is used. If the prescirbed thickness is other than 5cm (2 inches), the rate of application shall be as specified in the Supplementary Specifications. The temperature of the bituminous binder at the time of application shall be 150-175C (300-350F). The bituminous binder shall be applied only when the aggregate is dry for the full depth of the course and the conditions are favorable for proper penetration and adhesion, and when the weather conditions otherwise are favorable in the opinion of the Engineer.

Precautions satisfactory to the Engineer shall be taken to prevent spilling of the bituminous binder on the surface course when the equipment is being readied for operation and to prevent duplication of application when operations are stopped temporarily. Adequate shields shall be provided and operated to prevent spilling bituminous binder on areas or structures adjacent to the penetration surface course.

Immediately after the application of the bituminous binder, 10 mm (3/8 inch) cover material shall be spread uniformly over the large aggregate in the amount of approximately 15kg per square meter (25 pounds per square yard) and such as to provide a slight amount over that required to fill the surface voids. Immediately after spreading the 10 mm-(3/8 inch) cover material, the surface shall be rolled longitudinally with the 3-wheel roller specified above, dragged with an approved-type drag and rerolled. The final rolling operation or operations shall be longitudinal or a combination of longitudinal and diagonal rolling as may be necessary to smooth out ridges and other unevenness.

In all rolling herein specified, the rear wheels of the roller shall uniformly overlap their tracks of the previous pass. The wheels of the rollers shall be kept moistened when operating after the bitumen has been applied. When bituminous binder sticks to the roller wheels, additional 10 mm-(3/8 inch) cover material shall be spread.

The completed surface course shall have the required thickness, shall be thoroughly compacted and bound together. shall be at the prescribed grade and crown, and free from projections and depressions of more than 10 mm (3/8 inch) in 3 meters (10 feet) when tested longitudinally and transversely.

404.55 PROTECTION OF TRAFFIC AND HIGHWAY STRUCTURES

The provisions of Section 404.05 will apply.

404.56 METHOD OF MEASUREMENT

The quantity of penetration aggregate surface course to be measured for payment will be the actual area constructed, without deduction of areas occupied by manholes and similar structures within the paved area, and the volume of bituminous binder used. Bituminous binder will be measured as directed in Section 407.

404.57 BASIS OF PAYMENT

Payment for penetration aggregate surface course will be made for the quantity as above determined, measured in square meters at the price per square meter bid for the item penetration aggregate surface course in the Proposal, which price shall include the cost of the surface course complete, all materials, labor, equipment and all else necessary therefor and incidental thereto, except furnishing and applying the bituminous binder.

Payment for the bituminous binder will be made for the quantity as above determined, at the unit price bid for the item Bituminous Binder in the Proposal, which price shall include the cost of furnishing and applying the bituminous material, all labor, equipment and all else necessary therefor and incidental thereto.

SECTION 405 ROAD MIX BITUMINOUS PAVEMENT

405.01 DESCRIPTION

Road mix bituminous surfacing shall consist of aggregate and bituminous material, constructed on the roadway by mechanically mixing and processing these materials and spreading and compacting the resulting mixture in agreement with the Plans, Specifications, and the following requirements.

405.02 MATERIAL

(1) BITUMINOUS MATERIAL

Bituminous material shall be the type and grade stipulated in the Proposal or shown on the Plans and shall meet applicable requirements of Section 407.

(2) AGGREGATE

Aggregate shall either come entirely from an outside source or shall be a blend of new aggregate and material obtained from the existing roadway surface. New aggregate shall be of the type and grading stipulated which meets the requirements of Section 401.04.

405.03 EQUIPMENT

(1) BITUMINOUS DISTRIBUTOR

The Contractor will be required, regardless of the Project length or type of mixing equipment being used, to maintain on the project a bituminous distributor meeting the requirements of Section 404.03.

(2) ROADWAY EQUIPMENT

Roadway equipment shall meet the requirements of Section 401.09.

(3) ROAD PLANTS AND MACHINES

All traveling road-mixing plants and machines shall meet the approval of the Engineer. Such plants or machines shall be equipped with positive measuring devices, to be set as directed and not varied, except by the Engineer, for the accurate volume or weight-measuring and proportioning of the bitumen and aggregate. Aggregate pickup devices shall be capable of taking up all loose material, leaving the base surface clear and undamaged. Mixing machines which do not pick up the aggregate may also be used if approved. Auxiliary mixing machines which mix the material on the roadway but are not equipped with a bitumen proportioning device also may be used if approved. If the windrow is too large for the machine to handle properly, it may be divided into two or more windrows of workable and equal size. If a traveling plant or mixing machine is used, the Contractor shall provide blade graders to properly aerate the materials, complete the mixing operation and place the mixture. Irrespective of the type of road-mixing plant or machine used, the Contractor shall maintain on the Project not less than two motor graders of the type specified.

(4) STATIONARY PLANTS

If approved, the mixing of new aggregate and bituminous material in a stationary plant will be permitted. In this case mixing and aeration of the material, if not completed in the plant, shall be completed on the roadway as required under these Specifications. The mixing, spreading and compacting shall be done in accordance with the provisions of Section 401.

405.04 CONSTRUCTION METHODS

(1) LIMITATIONS AND CONDITIONS

On Projects five kilometers or more in length, the Contractor shall be capable of completing at least one-half kilometer of continuous road-mixed surface each day. On Projects less than five kilometers in length, he shall complete the road-mix construction in ten working days or less. When the Project is used by traffic, the rates of progress on the various phases shall be such that only a minimum length of work shall be under construction at one time. Sufficient mixing units shall be maintained on the Project to insure compliance with the required rate of construction progress.

The Contractor shall not open up more than two kilometers in one operation and at no time shall there be more than three kilometers under actual bituminous construction.

(2) STOCKPILING

The Contractor shall place no aggregate upon the roadway until such time that he can complete the mixing operation without interruption. If this operation cannot be completed, the material may be stockpiled at his option. If the Contractor elects to produce the aggregate at such a time that the mixing operation cannot be completed, the aggregate may be stockpiled for later use and the costs and all incidentals involved in the stockpile operation shall be at no expense to the HA. Stockpiling of aggregate shall be done in accordance with the provisions of Section 310.

(3) MOISTURE CONTENT

Should the moisture content of the aggregate exceed three (3) percent by weight, it shall be dried before applying

the bitumen. When the mixture is not in excess of five (5) percent moisture, the Contractor, at his own expense, may use a previously approved commercial antistripping additive in the bitumen to assist mixing, when emulsified asphalt is called for in the Plans.. In such a case, the limiting moisture content of the aggregate will be specified in the Special Provisions, or as directed.

In the event of rain during the application of bitumen or during the mixing operation, the material shall be windrowed promptly. Immediately after the rain has stopped, the Contractor shall drain all water puddles and shall not resume work until the treated material and the base are dry, except that such mixing as will facilitate drying will be permitted. In no case shall the bituminized material be placed while the material or the roadbed is damp or wet. The Engineer will be sole judge as to when the roadbed has dried sufficiently for work to be resumed. In no case shall the moisture content in the upper 15cm (6 inches) of the base be more than three and one-half percent when the mixture is placed.

(4) PROTECTION OF TRAFFIC AND HIGHWAY STRUCTURES

Protection of traffic shall be performed in accordance with Section 105.03. Protection of highway structures shall conform to Section 404.05.

(5) PRIME OR TACK COAT

Application of prime or tack coat, when designated on the Plans and Proposal, or as directed, shall be accomplished in accordance with Section 403.

(6) AGGREGATE

(a) Where aggregate is to be obtained, in whole or in

part, from the existing roadway, the surface shall be scarified to a depth which will produce the quantity of loose material required for the compacted thickness of the bituminous surfacing shown on the Plans. Extreme care shall be exercised to avoid loosening of the base surface or scarifying below the depth necessary to produce the required amount of material. All lumps shall be broken and the loose material bladed into a windrow. The base surface shall be shaped and compacted to conform to the typical section. When new material is blended with material obtained from the existing roadway, the amount of new material to be added will be designated on the Plans or by the Engineer. Blending of the old and new material shall be complete, in all respects, before the application of bitumen.

(b) When new aggregate is to be used exclusively, the existing roadway surface shall be shaped and compacted to the design sections shown on the Plans, and the prime coat applied, when directed, prior to placing the new aggregate. The new aggregate for the bituminous surface course shall be placed in a uniform windrow on one side of the roadway.

(c) After the material, either new or from the existing roadway, is windrowed at one side of the roadway, the windrow shall be equalized in size throughout its entire length by means of graders or mechanical equalizing devices. When necessary to secure uniformity of the windrow, material shall be hauled from sections where there is an excess to deficient sections.

(7) BITUMEN APPLICATION

Bituminous material shall be applied at the rates,

temperature, and in the manner directed. All aggregate shall have received uniform amounts of bitumen when the application process is completed. When applied with a distributor or mixing machines equipped with applicators, the windrowed aggregate shall be spread by laying in successive layers not less than 2.4 meters (8 feet) wide. A uniform amount of bitumen shall be applied before adding each next layer. Not less than three layers of aggregate and application of bitumen shall be made.

(8) PROCESSING

After the last application of bitumen is applied to the last layer, the entire mass of surfacing material shall be moved by blade graders into a windrow. The windrow shall then be bladed from side to side of the roadway with a revolving motion until all particles of aggregate are coated with bitumen and the whole mass has a uniform color and bitumen content, and has been satisfactorily aerated for spreading and compacting. At least eight moves of the material across the roadway will be required under the most favorable conditions of air temperature, material, grading, efficiency of equipment and skillful workmanship. A move shall be understood to consist of the movement of the entire mass from one edge of the proposed roadway section to the other. Under conditions less favorable for effective mixing, as many more moves will be required as are necessary to produce the desired uniformity of mixture. The moving or mixing shall be carried on in such a manner that there will be neither segregation of material nor loss of mineral filler from the mixture.

No mixed material shall be spread or allowed to remain on the roadway until the entire mass of material is thoroughly mixed. It then shall be spread and placed in

one operation unless, in the judgment of the Engineer, it may be expedient to permit a small portion of the mixture to serve as a mixing floor.

Equipment other than that specified may be used, with approval of the Engineer, if it will produce a completed mixture equal to that which would be produced by the means specified. The Engineer reserves the right to order discontinued the use of equipment which damages a section or portion of the roadway or fails to produce a satisfactory end result.

After mixing operations are completed, the mixture shall be examined to determine whether the proper proportion of bitumen has been used. If the proportion of bitumen is excessive, additional uncoated material shall be hauled onto the moist section and shall be thoroughly mixed with the original mass by blading. If more bitumen is required, a portion of the mixed material shall be spread upon one side of the roadway, the required additional bitumen distributed thereon, and the mixing resumed until a uniform mixture is secured.

Oversize material which may enter the mixture, regardless of its origin, shall be removed from the roadway, at the Contractor's expense, during the progress of the mixing.

Costs resulting from the required addition of bituminous material or untreated surfacing material to correct the uniformity of the mix will not be paid for directly and will be considered incidental to related items. Any additional material or work required due to the entrance of moisture or for other reason, prior to the completion of the final rolling of the surface, such as widening of the bituminous surfacing course over intermittent sections for turnouts,

traffic lanes and the like, not shown on the Plans, shall be considered incidental to the unit price of bid items, and no additional compensation for such work will be allowed.

(9) SPREADING AND COMPACTING

After a satisfactory mixture has been obtained, it shall be spread to the prescribed thickness by a pneumatic-tired motor grader of the prescribed type. Rolling shall be continued throughout the laydown operation. The pneumatic-tired roller shall start with the initial blade layout of the bituminous mixture and continue until the mat is uniformly and thoroughly compacted and all roller marks are eliminated. Rolling shall proceed in a longitudinal direction, beginning at the outer and working toward the center or beginning on the low side, on superelevated sections, and working upward. Each trip shall overlap the prior trip by about one-half the width of the rear roll. The pneumatic-tired roller shall be self-propelled and the pneumatic tires shall exert a pressure on the mat of not less than 4.3 kg per cm^2 (60 pounds per in^2).

Final rolling shall be done with the metal-wheeled roller. Roller operating speeds may be between 3 and 8 kilometers per hour (2 and 5 miles per hour) but shall not be of such speed as to cause displacement of material. Any displacement shall be corrected immediately. The use of kerosene or diesel fuel to prevent pickup on the finishing roller will not be allowed.

Defects, ravelling or other imperfections caused by faulty workmanship shall be corrected to the satisfaction of the the Engineer. New work shall not be started until such defects have been remedied. However, after the bitumen has been mixed with the aggregate and has been spread

and finally compacted in compliance with the Specifications, any additional materials and work required will be paid for on a force account basis. This provision will not cover failures which may be patched or repaired by hand methods, but will apply to those sections of the surface which necessitates tearing up with motorized equipment, adding bituminous material or aggregate, remixing, relaying, and compacting.

The finished surface shall be free of ruts, defects and depressions exceeding one cm (3/8 inch) as measured under a three-meter straightedge paralleling the center of the roadway, and shall have a smooth riding quality. Variations shall be corrected by scarifying and relaying the mixture at the Contractor's expense.

(10) SEAL COAT

Seal coat, when specified, shall be applied in accordance with Section 406.

405.05 METHOD OF MEASUREMENT

Bituminous material will be measured in accordance with Sections 407.05, 407.09, 407.14.

New or additional aggregate required for the bituminous surfacing course and the shoulders will be measured by the cubic meter or metric ton.

Processing of all bituminous surfacing materials in the completed and accepted work will be measured by the kilometer along the centerline of the roadway, or by the square meter, as stipulated in the Proposal.

405.06 BASIS OF PAYMENT

Bituminous material will be paid for at the contract unit

bid price in accordance with Sections 407.05, 407.09, 407.14.

When emulsified asphalt is called for, the additional water required during mixing as determined by the Engineer shall be included in the unit price bid for emulsified asphalt.

New or additional surfacing aggregate required to construct the bituminous surface course of the shoulders will be paid for at the contract unit bid price in accordance with the requirements of Section 308.

If stationary plant methods are permitted in accordance with the provisions of Section 405.03(4), no compensation, other than price adjustment for change of type or grade of bituminous material, will be allowed. If stationary plant methods are permitted, the grade of bituminous material may be changed one step by the Engineer, at no change in price.

Aggregate obtained from the roadway will not be paid for directly but shall be considered incidental and necessary to the performance of the other items of the contract.

Payment for all operations necessary to use aggregate obtained from the roadway will be included in the bid prices for the other items of the contract.

Processing of the bituminous surfacing materials will be paid for at the contract unit bid price per kilometer or per square meter, which price and payment will constitute full compensation for the work.

SECTION 406 SEAL COAT

406.01 DESCRIPTION

This work shall consist of an application of bituminous material followed by an application of cover coat material in accordance with the lines shown on the Plans or established by the Engineer.

406.02 MATERIAL

(1) BITUMINOUS MATERIAL

Bituminous material of the kind and grade stipulated in the Proposal or shown on the Plans shall meet the requirements of Section 407.

(2) COVER AGGREGATE

Cover aggregate shall be of the kind and grade stipulated in the Proposal or called for in the Plans, or shall meet the requirements for screening in AASHO Designation M 75. It may be produced under the contract for seal coat or it may be obtained from stockpiles produced under a previous contract, as stipulated in the Proposal or shown in the Plans.

406.03 EQUIPMENT

The following equipment will be required :

(1) Equipment for heating and applying bituminous material, meeting the requirements of Section 404.03.

(2) An approved rotary power broom.

(3) A minimum of two pneumatic-tired rollers meeting the requirements of Section 401.09.

(4) An aggregate spreader which shall meet the requirements of Section 404.03.

406.04 CONSTRUCTION METHODS

(1) GENERAL

No bituminous material shall be applied when the roadway surface is damp or wet, or weather conditions are such that the bitumen will become cooled or set before the cover material can be spread and rolled. Work shall not be started without the consent of the Engineer and shall be promptly terminated in the event of unfavorable weather conditions.

In no event shall the seal coat be placed on a newly constructed or reconditioned surface in less than ten (10) days after such surface has been constructed. Bitumen and aggregate for the seal coat shall not be placed upon a plant-mix bituminous surface sooner than twenty-one days after placement of the surface, unless directed otherwise.

When directed, the cover aggregate shall be wetted by watering at least three days prior to spreading.

(2) SWEEPING

Directly in advance of the first application of bituminous material, the roadway surface shall be swept clean of all dust, dirt or foreign matter by means of a power broom, blower, or hand brooming. Water washing may be required to remove clay, shale or other material that cannot be removed by mechanical or hand broom.. Such cleaning will not be measured nor paid for directly but shall be considered incidental to the other items of the contract.

If the surface texture on which the seal coat is being constructed is such as to permit rapid absorption, the Engineer may direct a preliminary application at a rate of

approximately 0.5 liters per square meter (0.1 gallon per square yard) of the type bitumen as specified. Such application will be measured and paid for as provided in the applicable provisions of Sections 407.05, 407.09, 407.14.

(3) APPLICATION OF BITUMEN

Immediately following the cleaning, the first application of bitumen shall be uniformly applied at the application temperature and at a rate per square meter directed by means of a pressure distributor of the type described in Section 404.03. Extreme care shall be taken in applying the bitumen to secure a uniform surface cover and true lines.

(4) APPLICATION OF COVER AGGREGATE

The Contractor shall not proceed with the application of bitumen until a supply of aggregate sufficient to cover the entire application is available for covering the bitumen immediately. Spreading of cover material shall be made promptly on the freshly spread bitumen when the Engineer determines that its consistency has become such that the best keying results will be obtained. The bitumen application shall be promptly covered with the specified cover material at the rate directed.

The cover material shall be spread uniformly over the bitumen with a self-propelled or truck-mounted mechanical spreader. The rate of application of the spreader shall be controlled independent of its motive power. Aggregate spreaders that fail to make a uniform and satisfactory distribution of material shall be promptly removed from the site. Special care shall be exercised in spreading cover material to secure uniformity of application.

Brooming by mechanical or hand methods, if directed, shall be employed to insure uniform distribution of the cover

material. When brooming is resorted to, particular caution must be exercised to avoid displacement or loosening of particles of cover material from the bitumen.

Bituminous material shall not be applied to such distances that uncovered bitumen becomes chilled to such extent during the time interval that it does not successfully key the maximum amount of cover aggregate. Bitumen must be applied in such manner and with such care that transverse and longitudinal joints of successive applications do not result in ridges or depressions. (5)

Longitudinal laps (meet lines) may be from 15 to 25cm (6 to 10 inches) in width, but there shall be no overlap at the end junction of applications. To prevent lapping at transverse junctions, the distributor shall be promptly shut off and, if necessary, a drip pan shall be inserted under the nozzles when the application stops. Before continuing the application of the bitumen, building paper shall be spread over the treated surface for sufficient distance back from the joint and on the cover aggregate so that the sprayers are operating at full force upon reaching the surface to which application is to be made. The bitumen application shall be stopped or shut-off on paper. Paper used for covering joints shall be removed from the site of the work. (6)

All transverse joints shall be covered with aggregate and broomed back before the next longitudinal application of bitumen. When it is necessary to cover meet lines to permit trucks or traffic to cross over, such cover aggregate shall be neatly broomed back exposing the full width of the meet line before the abutting application of bitumen is made.

Meet lines shall be kept to a minimum. If the Engineer

approves, the Contractor may make a full road-surface width application of bitumen and cover aggregate, to be performed in a single continuous operation. This operation shall be so coordinated that the movement of public traffic will not suffer greater inconvenience than that resulting from strip or half-roadway width methods.

ROLLING

Rolling of cover aggregate shall be in accordance with Section 404.04(5).

The use of equipment which results in excessive crushing of the aggregate will not be permitted.

OPENING TO TRAFFIC

Upon application of the cover aggregate course, the surface shall be opened to traffic for a period of not to exceed 48 hours. During this period the specific traffic control, as directed in conformity with Section 105.03, shall be in effect, and the surface shall be maintained by brooming and rolling as directed. Holes or breaks that may occur shall be satisfactorily repaired. Areas showing excess bitumen shall be covered with aggregate and rolled. Irregularities influencing the stability and riding quality of the surface shall be corrected in a satisfactory manner. Cost of such repairing or corrections shall not be paid for directly but shall be incidental to other bid items in the contract.

Trucks hauling cover material to the spreader units or traffic shall not be permitted, under any circumstances, to cross over or to drive on any uncovered bituminous material. When operating over freshly spread cover material, the speed of vehicular traffic shall be so regulated that loosening and displacement of cover material shall not occur.

Drivers failing to observe this requirement will be promptly removed from the work.

(7) STOCKPILING AGGREGATES

Stockpiling of aggregates shall be done in accordance with the provisions of Section 310.

(8) PROTECTION OF TRAFFIC AND HIGHWAY STRUCTURES

Protection of traffic and highway structures shall meet the requirements of Sections 105.03 and 404.05.

406.05 METHOD OF MEASUREMENT

(a) Bituminous material used in the completed and accepted work will be measured in accordance with Sections 407.05, 407.09, 407.14.

(b) Cover material used in the completed and accepted work will be measured by the ton on scales furnished by the Contractor, or by the cubic meter, measured in the vehicle at the point of delivery on the roadway, as stipulated in the Proposal.

406.06 BASIS OF PAYMENT

Accepted quantities of bituminous material, cover aggregate, rolling and traffic protection will be paid for at the respective unit prices bid, or stipulated in the contract. These prices and payments will be full compensation for furnishing all materials, labor, equipment and incidentals necessary to complete the work. Furnishing water and wetting cover material, when directed, shall be accomplished by the Contractor at no additional cost to the HA.

SECTION 407 BITUMINOUS MATERIALS

407.01 ASPHALT CEMENT

Asphalt cement shall be an oil asphalt, or a mixture of the refined liquid asphalt and refined solid asphalt prepared from crude asphaltic petroleum. It shall be free from contamination by residues obtained from the artificial distillation of coal, coal tar, or paraffin oil, and shall be homogeneous and free from water. No emulsification shall occur when a 30-gram sample is boiled for 2 hours with 250 cubic centimeters of distilled water in a 500 cubic-centimeter Erlenmeyer flask equipped with a reflux condenser.

407.02 GRADES

Asphalt cements shall be classified by penetration and shall conform to the requirements set forth in Table I of AASHO M 20. Methods of sampling and testing shall be those shown in AASHO M 20.

During the process of manufacture, or during construction, asphalt shall not be heated to the extent that it will be injured. One evidence of such injury is the formation of carbonized particles.

407.03 TEST REPORTS

A test report shall be furnished, in duplicate, by the vendor at the time of shipment of any portion of an order. The report shall show the shipment number, date of shipment, contract number or purchase order number, quantity, and the results of the above specified tests. The test report shall accompany each shipment and a copy shall be mailed to the Engineer.

407.04 APPLYING ASPHALT

Asphalt shall be heated and applied in accordance with the

provisions of Section 407.03 except as otherwise provided under various sections of these Specifications, and full compensation therefor shall be considered as included in the price paid for the asphalt or in the prices paid for the items of work involving the use of the asphalt.

Unless otherwise provided in these Specifications or in the Special Provisions, paving asphalt shall be applied at a temperature of not less than 121C (250F) nor more than 177C (350F), the exact temperature to be determined by the Engineer.

407.05 MEASUREMENT AND PAYMENT

(1) Asphalt cement will be measured and paid for by the metric ton. Each vehicle used in transporting asphalt cement will be weighed completely empty and then after loading, and the difference in weights will be used as the basis for computing the tonnage. Any scale used shall be capable of weighing the transporting unit in an unbroken operation and shall be satisfactory to the Engineer. The scales shall be tested and sealed, at the expense of the supplier, as often as the Engineer may consider necessary to insure their accuracy.

(2) If asphalt cement is delivered in drums, the Contractor shall furnish certification from the supplier of the standard weight of asphalt per drum. The Engineer will spot check the weight of drums.

(3) In the case of plant-mix operations, the asphalt cement may be weighed, with approval of the Engineer, on the plant scale.

(4) Payment for asphalt cement will be at the unit price bid per metric ton, which price will include all costs of furnishing and placing the asphalt cement, and all costs incidental thereto.

407.06 LIQUID ASPHALTS

Liquid asphalts shall consist of materials conforming to the following classifications:

(1) SC ASPHALTS

Slow curing products designated by the letters SC shall consist of natural crude oils or residual oils from crude asphaltic petroleum, and shall meet the requirements of AASHO M 141 when tested in accordance with Methods of Sampling and Testing shown therein.

(2) MC ASPHALTS

Medium curing products designated by the letters MC shall consist of paving asphalt conforming to the provisions of Sections 407.01, 407.02. Asphalts, fluxed or blended with a kerosene solvent, shall meet the requirements of AASHO M 82 when tested in accordance with the Methods of Sampling and Testing shown therein.

(3) RC ASPHALTS

Rapid curing products designated by the letters RC shall consist of paving asphalt conforming to the provisions in Sections 407.01, 407.02. Asphalts with a penetration of approximately 85 to 100, fluxed or blended with a naphtha solvent, shall meet the requirements of AASHO M 81 when tested in accordance with the Methods of Sampling and Testing shown therein.

407.07 TEST REPORTS

Test reports shall be furnished in accordance with Section 407.03.

407.08 MIXING AND APPLYING

Attention is directed to the appropriate provision for

preservation of property and responsibility for damage. Care shall be taken to prevent spraying upon adjacent pavements, that portion of the traveled way being used by traffic, structures, railings and barriers, markers, trees and shrubbery, adjacent property and improvements and other highway improvements not mentioned herein.

Unless otherwise specified, the various grades of liquid asphalt shall be applied at temperatures within the limits specified in the table of application temperatures below. When liquid asphalt is to be mixed with aggregate, the temperature of the aggregate at the time of adding the liquid asphalt shall not exceed that shown in the column of pug-mill mixing temperatures.

At no time shall the temperature of the liquid apshalt be raised above that given in the last column of the following table, unless authorized by the Engineer.

APPLICATION TEMPERATURES OF LIQUID ASPHALTS

Grade of Liquid Asphalt	Pug-Mill Mixing Temperature of Aggregate Maximum	Asphalt Application Temperature	
		Minimum	Maximum
SC-70	N/A *	41C(105F)	79C(175F)
SC-250	93C(200F)	60C(140F)	107C(225F)
SC-800	107C(225F)	79C(175F)	124C(255F)
SC-3000	127C(260F)	102C(215F)	143C(290F)
MC-70	N/A	41C(105F)	79C(175F)
MC-250	93C(200F)	60C(140F)	107C(225F)
MC-800	107C(225F)	79C(175F)	124C(255F)
MC-3000	127C(260F)	102C(215F)	143C(290F)
RC-70	N/A	41C(105F)	79C(175F)
RC-250	N/A	60C(140F)	107C(225F)
RC-800	N/A	79C(175F)	124C(255F)
RC-3000	N/A	102C(215F)	143C(290F)

No grade of rapid curing liquid asphalt shall be plant-mixed with heated aggregate.

N/A (Not Applicable) refers to asphalts not usually mixed with aggregate.

Liquid asphalt shall be heated by a retort or by steam coils in such a manner that steam will not be introduced directly into the liquid asphalt during heating. Contractor shall furnish and keep on the work at all times an accurate thermometer suitable for determining the temperature of the liquid asphalt being applied.

The distributor shall be so designed, equipped, maintained and operated that bituminous material at even heat may be applied uniformly on variable widths of surface up to 5 meters (15 feet) at readily determined and controlled rates from 0.23 to 9.0 liters per square meter (0.05 to 2.0 gallons per square yard), with uniform pressure and with an allowable variation from any specified rate not to exceed 0.09 liter per square meter. Distributor equipment shall include a hand-spray nozzle and hose, a tachometer, pressure gauges, accurate volume-measuring devices or a calibrated tank, and a thermometer for measuring temperatures of tank contents. Distributors shall be equipped with a power unit for the pump and full circulation spray-bars adjustable laterally and vertically.

407.09 MEASUREMENT AND PAYMENT

(1) Liquid asphalt will be measured and paid for by the liter.

If the liquid asphalt is measured directly in liters, the volume will be measured at 16C(60F) or corrected to this basis by means of the appropriate group table as designated in volume correction tables ASTM D 1250. Liquid asphalt, when measured by the liter, shall be transported in tanks previously certified as to their capacity. Each tank

shall be accompanied by its proper measuring rod and calibration card.

(2) If the Engineer approves, the liquid asphalt will be measured by the metric ton as specified in 407.05(1). The tonnage will be converted to liters at 16C(60F) using the table below.

AVERAGE WEIGHTS AND VOLUMES OF LIQUID ASPHALT

Grade of Liquid Asphalt	Liters Per Metric Ton at 16C(60F)	Gallons Per Metric Ton at 16C(60F)	Kilograms Per Liter at 16C(60F)	Pounds Per Gal. at 16 C(60F)
70	1055	279	.948	7.90
250	1039	274	.963	8.03
800	1022	270	.978	8.16
3000	1006	266	.994	8.30

(3) When surfacing material is obtained from commercial plants and liquid asphalt is to be paid for as a separate contract item, the weight of liquid asphalt as determined by the batch scales of the mixing plant will be accepted as the basis for computing pay quantities of liquid asphalt, when permitted in writing by the Engineer. The weight shall be adjusted to volume at 16C (60F) as specified in (2) above.

(4) Payment for liquid asphalt will be at the unit price bid per liter, which price will include all costs of furnishing and placing the liquid asphalt and all costs incidental thereto.

407.10 EMULSIFIED ASPHALTS

Emulsified asphalts shall be composed of a bituminous base, uniformly emulsified with water, and an emulsifying or stabilizing agent.

407.11 GRADES

The grades of anionic emulsified asphalts shall conform to the requirements set forth in Table I of AASHO M 140. Methods of sampling and testing will be in accordance with AASHO M 140.

The grades of cationic emulsified asphalts shall conform to the requirements set forth in Table I of AASHO M 208. Methods of sampling and testing will be accordance with AASHO M 208.

407.12 TEST REPORTS

Test reports shall be furnished in accordance with Subsection 407.03 Test Reports.

407.13 APPLYING

Emulsified asphalt may be reheated if necessary, but at no time shall the temperature of the emulsion be raised above 71C (160F), unless permitted by the Engineer. The emulsified asphalt shall be agitated during all reheating operations to prevent localized overheating. Emulsified asphalt shall be applied in accordance with the provisions in Section 407.06 and the following additional requirements.

Setting Grade 1, emulsified asphalts, except when used for fog-seal coats, shall be applied at a temperature between 43C (110F) and 66C (150F), unless otherwise directed by the Engineer.

407.14 MEASUREMENT AND PAYMENT

(1) Emulsified asphalt will be measured and paid for by the liter. When water is added to emulsified asphalt, the quantities of emulsified asphalt to be paid for will be determined prior to the addition of the water.

If the emulsified asphalt is measured directly in liters, the

volume will be measured at 16C(60F) or corrected to this basis by means of the appropriate group table as designated in volume correction tables ASTM D 1250.

Emulsified asphalt, when measured by the liter, shall be transported in tanks previously certified as to their capacity. Each tank shall be accompanied by its proper measuring rod and calibration card.

(2) If the Engineer approves, the emulsified asphalt will be measured by the metric ton as specified in 407.05(1). The tonnage will be converted to liters at 16C(60F) using the table below.

AVERAGE WEIGHT AND VOLUME OF ASPHALTIC EMULSION

Type Of Emulsion	Liters Per Metric Ton At 16C(60F)	Gallon Per Metric Ton At 16C(60F)	Kilograms Per Liter At 16C(60F)	Pounds Per Gallon At 16C(60F)
All Types	1001	265	999	8.33

(3) Payment for emulsified asphalt will be at the unit price bid per liter, which price will include all costs of furnishing and placing the emulsified asphalt, and all costs incidental thereto.

TABLE OF CONTENTS
SECTION 500 STRUCTURES

SECTION	TITLE	PAGE
501	Structure Excavation	270
502	Sheet Piles	276
503	Bearing Piles	278
504	Concrete Masonry	293
505	Reinforcement	339
506	Ashlar Masonry	345
507	Mortar Rubble Masonry	354
508	Dry Rubble Masonry	358
509	Brick Masonry	360
510	Steel Structures	362
511	Bronze or Copper-Alloy Bearing and Expansion Plates	452
512	Steel-Grid Flooring	454
513	Railings	459
514	Painting Metal Structures	462
515	Protection of Embankments & Slopes	469
516	Concrete Cribbing	480
517	Waterproofing	482
518	Dampproofing	489
519	Name Plates	491
520	Timber Structures	492
521	Preservative Treatments for Timber	512
522	Timber Cribbing	514
523	Structural Plate Pipes, Pipe Arches and Arches	518
524	Wearing Surfaces	522
525	Elastomeric Bearings	523
526	Construction of Tunnel Using Steel Tunnel Liner Plates	527
527	Temporary Bridges	530
550	Portland Cement Concrete Pavement	533

SECTION 501 STRUCTURE EXCAVATION

501.01 GENERAL

Foundation excavation shall include the removal of all material, of whatever nature, necessary for the construction of foundations and substructures in accordance with the Plans or as directed by the Engineer. It shall include the furnishing of all necessary equipment and the construction of all cribs, dewatering, etc., which may be necessary for the execution of the work. It shall also include the subsequent removal of cofferdams and cribs and the placement of all backfill as specified. It shall also include the disposing of excavated material not required for backfill, in a manner and in locations so as not to affect the carrying capacity of the channel.

Compensation for all clearing and grubbing shall, unless otherwise specified, be included in the unit price or prices bid for another item or other items.

All substructures, where practicable, shall be constructed in open excavation and, where necessary, the excavation shall be shored, braced or protected by cofferdams in accordance with approved methods. When footings can be placed in the dry, backforms may be omitted with the approval of the Engineer and the entire excavation filled wi.. concrete to the required elevation of the top of the footing. The additional concrete required shall be placed at the expense of the Contractor.

501.02 PRESERVATION OF CHANNEL

The natural stream bed adjacent to the structure shall not be disturbed without permission from the Engineer. Material deposited within the stream area from foundation or other excavation shall be removed and the stream area thereby freed from obstruction.

501.03 DEPTH OF FOOTINGS

The elevation of the bottoms of footings, as shown on the Plans, shallbe considered as approximate only and the Engineer may order, in writing, such changes in dimensions or elevation of footings as may be necessary to secure a satisfactory foundation.

501.04 PREPARATION OF FOUNDATION FOR FOOTINGS

All rock or other hard foundation material shall be freed from all loose material, cleaned and cut to a firm surface, either level, stepped or roughened, as may be directed by the Engineer. Seams shall be cleaned out.

When masonry is to rest on an excavated surface other than rock, special care shall be taken not to disturb the bottom of the excavation, and the final removal of the foundation material to grade shall not be made until just before the masonry is to be placed.

501.05 COFFERDAMS AND CRIBS

(1) GENERAL

Cofferdams and cribs for foundation construction shall be carried to adequate depths and heights, be safely designed and constructed, and be made as water-tight as is necessary for the proper performance of the work which must be done inside them. In general, the interior dimensions of cofferdams and cribs shall be such as to give sufficient clearance for the construction of forms and the inspection of their exteriors, and to permit pumping outside of the forms. Cofferdams or cribs which are tilted or moved laterally during the process of sinking shall be righted, reset or enlarged so as to provide the necessary

clearance, and this shall be at the sole expense of the Contractor.

When conditions are encountered which, in the opinion of the Engineer, make it impracticable to unwater the foundation before placing masonry, he may require the construction of a concrete foundation seal.

Generally, the construction of a seal is as follows : The excavation is made, allowing the water inside the cofferdam to be at the same level as the water outside. When the desired depth is reached, the excavation is stopped and the hole cleaned and shaped. If piles are to be used, they are then installed. The piles are allowed to extend a distance more than the required seal thickness. The seal concrete is carefully placed under water. After the concrete has set and gained its strength, the cofferdam is unwatered. The surface should be leveled, cleaned, and laitance removed. The remainder of the masonry is then constructed in the dry.

(2) PROTECTION OF CONCRETE

Cofferdams shall be constructed so as to protect fresh concrete against damage from a sudden rising of the stream and to prevent damage to the foundation by erosion. No timber or bracing shall be left in cofferdams in such a way as to extend in to the substructure masonry, without written permission from the Engineer.

(3) DRAWING REQUIRED

For substructure work the Contractor shall submit, upon request, drawings showing his proposed method of cofferdam construction and other details left to his choice or not fully shown on the Engineer's drawings. Such

drawings shall be approved by the Engineer before construction is started on work governed by them.

(4) REMOVAL

Unless otherwise specified, all cofferdam sheeting and bracing shall be removed after the completion of the substructure, care being taken not to disturb or otherwise damage the finished masonry.

501.06 PUMPING

Pumping from the interior of any foundation enclosure shall be done in such a manner as to preclude the possibility of the movement of water through any fresh concrete. No pumping will be permitted during the placing of concrete or for a period of at least 24 hours thereafter; and in no case until the seal has set sufficiently to withstand the hydrostatic pressure.

501.07 VACANT

501.08 VACANT

501.09 INSPECTION

After each excavation is completed, the Contractor shall notify the Engineer, and no concrete s' be placed until the Engineer has approved the depth of t , excavation and the character of the foundation material.

501.10 BACK-FILL

All material used for backfill shall be of a quality acceptable to the Engineer and shall be free from muck, vegetable matter or other extraneous material.

All spaces excavated and not occupied by abutments, piers or other permanent work shall be refilled with earth up to the

surface of the surrounding ground, with a sufficient allowance for settlement. All backfill shall be thoroughly compacted and its top surface shall be graded.

The fill behind abutments and wing-walls of all bridge structures shall be deposited in well-compacted, horizontal layers not to exceed 30 centimeters (12 inches) in thickness. The backfill in front of such units shall be placed first to prevent the possibility of forward movement. Special precautions shall be taken to prevent any wedging action against the masonry, and the slope bounding the excavation for abutments and wing-walls shall be removed by stepping or roughening to prevent wedge action. Jetting of the fill behind the abutments and wing-walls will not be permitted.

Fill placed around culverts and piers shall be deposited on both sides to approximately the same elevation at the same time.

Adequate provision shall be made for the thorough drainage of all back-filling. French drains shall be placed at weep holes.

No backfill shall be placed against any masonry abutment, wing-wall or culvert until permission shall have been given by the Engineer and until the masonry has been in place 14 days.

Backfilling of of sectional plate pipes and arches shall be done in accordance with Sections 523.05 and 523.06.

501.11 APPROACH EMBANKMENT

When the contract for any bridge structure requires the placement of approach embankments, they shall be constructed and paid for in accordance with the highway specifications governing this class of construction.

501.12 CLASSIFICATION OF EXCAVATION

Classification, if any, of excavation will be indicated on the Plans or set forth in the Proposal.

501.13 METHOD OF MEASUREMENT

The quantity of material to be measured for payment shall be the actual number of cubic meters of material acceptably excavated in conformity with the Plans or as directed by the Engineer, but no material shall be included in the measurement for payment which is outside of a volume bounded by vertical planes 50 centimeters (18 inches) outside of and parallel to the neat lines of the footing. The cross-sectional area measured shall not include water or other liquids, but shall include mud, muck and other similar semi-solids.

The top and bottom limits of computed volumes shall be the original ground or the top of the required grading cross section, whichever is lower, and the bottom of the completed footing.

When it is necessary in the opinion of the Engineer to carry the foundations below the elevations shown on the Plans, the excavation for the first meter of additional depth will be included in the quantity for which payment will be made under the item "Structure Excavation". Excavation below this additional depth will be measured as $1\frac{1}{2}$ times the actual volume.

501.14 BASIS OF PAYMENT

Payment for foundation excavation shall be made at the contract unit price per cubic meter and shall include the cost of all labor, material, equipment and other items necessary for completion of the excavation to the elevation of the bottom of the footing. It shall also include the cost of removing surplus material which has been removed during the process of excavation, and shall include the cost of backfilling and compacting an amount of material equal to the amount of excavation.

SECTION 502 — SHEET PILES

502.01 GENERAL

This Specification covers only sheet piling shown on the Plans, or ordered by the Engineer, to be left in place so that it becomes a part of the finished structure.

502.02 TIMBER SHEET PILES

The timber, unless otherwise noted, shall be preservatively treated, and may consist of any treatable species which will satisfactorily stand driving. It shall be sawed or hewn with square corners and shall be free from wormholes, loose knots, wind shakes, decayed or unsound portions, or other defects which might impair its strength or tightness.

The piles shall be of the dimensions shown on the Plans either cut from the solid material or made by building up the piles of three planks securely fastened together. The piles shall be drift-sharpened at their lower ends so as to wedge the adjacent piles tightly together.

The tops of the piles shall be cut off to a straight line at the elevation indicated and shall be braced with waling strips, properly lapped and joined at all splices and corners. The wales shall preferably be in one length between corners and shall be bolted near the tops of the piles.

502.03 CONCRETE SHEET PILES

Where concrete sheet piles are required, they shall be in strict accordance with the detailed design. The requirements governing the manufacture and installation of concrete sheet piling shall conform, in general, to those governing precast concrete bearing piles.

502.04 STEEL SHEET PILES

Steel sheet piles shall be of the type and weight indicated

on the Plans or designated in the Special Provisions and of the material required below.

The piles, when in place in the completed structure, shall be practically water-tight at the joints. Painting of steel sheet piles shall conform to Section 502.14.

Steel sheet piles shall conform to the requirements of AASHO M 202 (ASTM A 328).

502.05 METHOD OF MEASUREMENT

Timber, concrete and steel sheet piles to be measured for payment shall be actual square meters of piling in place and accepted by the Engineer. Horizontal measurement of steel sheet piling will be the projected width or driving distance of the sheet pile.

No separate measurement for payment of cutoffs will be made.

502.06 BASIS OF PAYMENT

Timber, concrete and steel sheet piles will be paid for at the contract unit price per square meter for furnishing, driving and cutting off of the piles.

The contract unit price per square meter shall include full compensation for furnishing, driving, cutting off of the pile, and for furnishing all labor, materials, tools, equipment and incidentals necessary to set the pilling to required penetration as shown on the Plans or specified or as directed by the Engineer.

SECTION 503 BEARING PILES

503.01 MATERIALS

Steel piles shall consist of structural steel shapes of the section provided on the Plans or as otherwise specified. The steel shall conform to the Specification for Structural Steel, AASHO M 183 (ASTM A 36).

503.02 DESIGN AND CONDITIONS OF USE

General and Design : Refer to Division I, Section 4. Bearing Value, Design : Refer to Section 1.4.4 of the Standard Specifications for Highway Bridges.

503.03 PREPARATION FOR DRIVING

(1) EXCAVATION

In general, piles shall not be driven until after the excavation is completed. Any material forced up between the piles shall be removed to correct elevation without cost to the HA before foundation masonry is placed.

(2) CAPS

The heads of all concrete piles and the heads of timber piles, when the nature of the driving is such as to unduly injure them, shall be protected by caps of approved design, preferably having a rope or other suitable cushion next to the pile head and fitting into a casting which in turn supports a timber shock block. When the head of any timber pile is greater than that of the face of the hammer, a suitable cap shall be provided to distribute the blow of the hammer throughout the cross-section of the pile.

The head shall be cut square and shall be shaped or chamfered to prevent splitting at its periphery.

For special types of piling, driving heads, mandrels or other devices in accordance with the manufacturers' recommendations shall be provided so that the pile may be driven without injury.

For steel piling the heads shall be cut squarely and a driving cap shall be provided to hold the axis of the pile in line with the axis of the hammer.

(3) COLLARS

Collars, bands, or other devices to protect timber piles against splitting and brooming shall be provided where necessary.

(4) POINTING

Timber piles shall be pointed where soil conditions require it. When necessary, the piles shall be shod with metal shoes of a design satisfactory to the Engineer, the points of the piles being carefully shaped to secure an even and uniform bearing on the shoes.

(5) SPLICING PILES

Full-length piles shall be used where practicable. In exceptional circumstances splicing of piles may be permitted. The method of splicing shall be as shown on the Plans or as approved by the Engineer. When the splicing of steel piles or steel shells of special piles is done by welding, the arc method shall be given preference.

(6) PAINTING STEEL PILES

When required, steel piles shall be painted as specified in Section 503.17.

503.04 METHODS OF DRIVING

(1) GENERAL

Piles may be driven with a gravity hammer, a steam hammer, a diesel hammer or a combination of water jets and hammer. Precast concrete piles, preferably, shall be driven by means of a combination of hammer and jet.

Pile hammers, other than drop hammers, shall be approved steam, air, or diesel hammers that develop sufficient energy to drive piles at a penetration rate of not less than 3.5mm (1/8 inch) per blow at the required bearing value. The Contractor shall provide the Engineer with sufficient hammer data, as published by the manufacturer, to enable him to compute the bearing values of the driven piles.

Unless otherwise directed by the Engineer, piles shall not be driven within 8 meters of any concrete structure or cast-in-place pile that has not cured for at least 7 days.

(2) HAMMERS FOR TIMBER AND STEEL PILES

Gravity hammers for driving timber piles shall weigh not less than 900 kilograms (2,000 pounds), preferably 1,350 kilograms (3,000 pounds), and for steel piles not less than 1,350 kilograms (3,000 pounds); but in no case shall the weight of the hammer be less than the combined weight of driving head and pile. The fall shall be so regulated as to avoid injury to the piles and in no case shall exceed 5 meters (15 feet). When a steam hammer is used, the total energy developed by the hammer shall be not less than 830 meter-kg (6,000 foot-pounds) per blow.

(3) HAMMERS FOR CONCRETE PILES

Unless otherwise provided, concrete piles, precast piles, or shells for cast-in-place piles shall be driven with a hammer

which shall develop an energy per blow at each full stroke of the piston, of not less than 0.30 meter-kg for each kilogram (one foot-pound for each pound) of weight driven. In no case shall the total energy developed by the hammer be less than 830 meter-kg (6,000 foot-pounds) per blow.

If a gravity hammer is used, it shall have a weight not less than 50 per cent of the weight of the pile, but in no case less than 1,350 kg (3,000 pounds); and the drop of the hammer shall not exceed 2.4 meters (8 feet).

4) ADDITIONAL EQUIPMENT

In case the required penetration is not obtained by the use of a hammer complying with the above minimum requirements, the Contractor shall provide a heavier hammer, or resort to jetting at his own expense.

(5) LEADS

Pile driver leads shall be constructed in such a manner as to afford freedom of movement of the hammer, and they shall be held in position by guys or stiff braces to insure support to the pile during driving. Except where piles are driven through water, the leads, preferably, shall be of sufficient length so that the use of a follower will not be necessary.

Inclined leads shall be used in driving battered piles.

(6) FOLLOWERS

The driving of piling with followers shall be avoided if practicable and shall be done only under written permission of the Engineer. When followers are used, one pile from each group of 10 shall be a long pile driven without a follower, and shall be used as a test pile to determine the average bearing power of the group.

(7) WATER JETS

When water jets are used, the number of jets and the volume and pressure of water at the jet nozzles shall be sufficient to freely erode the material adjacent to the pile. The plant shall have sufficient capacity to deliver at all times at least 7 kilograms per sq. cm (100 pounds per square inch) pressure at two 19mm (3/4 inch) jet nozzles. Before the desired penetration is reached, the jets shall be withdrawn and the piles shall be driven with the hammer to secure the final penetration.

(8) ACCURACY OF DRIVING

Piles shall be driven with a variation of not more than 2 cm/meter (1/4 inch per foot) from the vertical or from the batter shown on the Plans,, except that piles for trestle bents shall be so driven that the cap may be placed in its proper location without inducing excessive stresses in the piles, and foundation piles shall not be out of the position shown on the Plan more than 15 cm (6 inches) after driving.

503.05 DEFECTIVE PILES

The procedure incident to the driving of piles shall not subject them to excessive and undue abuse, producing crushing and spalling of the concrete, injurious splitting, splintering and brooming of the wood, or deformation of the steel. Manipulation of piles to force them into proper position, considered by the Engineer to be excessive, will not be permitted. Any pile damaged by reason of internal defects, or by improper driving, or driven out of its proper location, or driven below the elevation fixed by the Plans or by the Engineer, shall be corrected at the Contractor's expense by one of the following methods approved by the Engineer for the pile in question :

(1) The pile shall be withdrawn and replaced by a new and, if necessary, a longer pile.

(2) A second pile shall be driven adjacent to the defective or low pile.

(3) The pile shall be spliced or built up as otherwise provided herein or a sufficient portion of the footing extended to properly embed the pile. Timber piles shall not be spliced without specific permission of the Engineer. All piles pushed up by the driving of adjacent piles or by any other cause shall be driven down again.

503.06 DETERMINATION OF BEARING VALUES (See also Section 1.4.4 in the Design Specifications.)

(1) LOADING TESTS

When required, the size and number of piles shall be determined by actual loading tests. In general, these tests shall consist of the application of a test load placed upon a suitable platform supported by the pile, with suitable apparatus for accurately measuring the test load and the settlement of the pile under each increment of load.

In lieu thereof, hydraulic jacks with suitable yokes and pressure gauges may be used.

The safe allowable load shall be considered as 50 percent of that load which, after a continuous application of 48 hours, produces a permanent settlement not greater than 0.6 centimeter (1/4 inch) measured at the top of the pile. This maximum settlement shall not be increased by a continuous application of the test load for a period of 60 hours or longer.

At least one pile for each group of 100 piles, preferably, should be tested.

(2) FRICTION PILE FORMULAS

When not driven to practical refusal, the bearing values of piles preferably shall be determined by load tests as specified above. In the absence of loading tests or substantiated adequate pile formulas, the safe bearing values for timber piles shall be determined by the following formulas:

METRIC UNITS

$$P = \frac{WH}{6S + 15}$$ for gravity hammers

$$P = \frac{WH}{6S + 1.5}$$ for single-acting steam or diesel hammers

$$P = \frac{H(W + Ap)}{6S + 1.5}$$ for double-acting steam hammers

where P = safe bearing capacity in metric tons,

W = weight, in metric tons, of striking parts of hammer,

H = height of fall in centimeters,

A = area of piston in square centimeters,.

P = steam pressure in metric tons per square centimeter at the hammer,

S = the average penetration in centimeters per blow for the last 5 to 10 blows for gravity hammers and the last 10 to 20 blows for steam hammers.

U. S. STANDARD UNITS

$$P = \frac{2\,WH}{S + 1.0}$$ for gravity hammers,

$P = \frac{2\,WH}{S + 0.1}$ for single-acting steam hammers, or diesel hammers,

$P = \frac{2H\,(W+Ap)}{S + 0.1}$ for double-acting steam hammers,

where P = safe bearing capacity in pounds,

W = weight, in pounds, of striking parts of hammer.

H = height of fall in feet,

A = area of piston in square inches,

p = steam pressure in pounds per square inch at the hammer,

S = the average penetration in inches per blow for the last 5 to 10 blows for gravity hammers and the last 10 to 20 blows for steam hammers.

The above formulas are applicable only when:

The hammer has a free fall.
The head of the pile is not broomed or crushed.
The penetration is reasonably quick and uniform.
There is no appreciable rebound.
A follower is not used.

Twice the height of the bounce shall be deducted from "H" to determine its value in the formula.

Unless otherwise ordered by the Engineer, timber piling shall be driven to the bearing value given on the Plans or in the Supplemental Specifications. If bearing values are not given, timber piling shall be driven to a minimum value of twenty tons.

In case water jets are used in connection with the driving, the bearing capacity shall be determined by the above

formulas from the results of driving after the jets have been withdrawn, or a load test may be applied.

(3) CONCRETE AND STEEL PILES

When not driven to practical refusal (10 blows per 25mm or 10 blows per inch), the bearing value for concrete and steel piles preferably shall be determined by means of loading tests specified above. In the absence of loading tests, their safe bearing values may be approximated by substantiated adequate pile formulas or those specified for timber piles. However, the character of the soil penetrated, conditions of driving, distribution, size, length and weight of the piles or shells driven, and the computed load per pile shall be given due consideration in determining their probable safe bearing value.

503.07 TEST PILES

When required, the Contractor shall drive test piles of a length and at the location designated by the Engineer. These piles shall be of greater length than the length assumed in the design in order to provide for any variation in soil conditions.

503.08 ORDERING PILES

The piling shall be of the type and size indicated on the Plans. The lengths shown on the Plans for a structure, unless otherwise specified, shall be used for estimating purposes only.

The order length of piling will be determined by the Contractor, either from the Plans, Special Provisions, or by driving test piles.

The lengths of piles indicated on the Plans are based on the lengths which are assumed to remain in the completed structure.

503.09 STORAGE AND HANDLING OF TIMBER PILES

The method of storing and handling shall be such as to avoid injury to the piles. Special care shall be taken to avoid breaking the surface of treated piles. Cuts or breaks in the surface of treated piling shall be given three brush coats of hot creosote oil of approved quality, and hot creosote oil shall be poured into all bolt holes.

503.10 CUTTING OFF TIMBER PILES

The tops of all piling shall be sawed to a true plane, as shown on the Plans, and at the elevation fixed by the Engineer. Piles which support timber caps or grillage shall be sawed to conform to the plane of the bottom of the superimposed structure. In general, the length of pile above the elevation of cutoff shall be sufficient to permit the complete removal of all material injured by driving, but piles driven to very nearly the cutoff elevation shall be carefully adzed or otherwise freed from all splintered or injured material.

503.11 CUTTING OFF STEEL OR STEEL SHELL PILES

Piles shall be cut off at the required elevation. If capping is required, the connection shall be made according to details shown on the plans.

503.12 CAPPING TIMBER PILES

After cutoff, the heads of timber piles shall be protected as specified in Section 520.07.

503.13 MANUFACTURE OF PRECAST CONCRETE PILES

(1) GENERAL

Piles shall be constructed in accordance with details shown on the Plans.

(2) CLASS OF CONCRETE

Class A or AE concrete shall be used for precast concrete piles.

(3) FORM WORK

Forms for precast concrete piles shall conform to the general requirements for concrete form work as provided in Section 504.19. Forms shall be accessible for tamping and consolidation of the concrete. Under good weather-curing conditions, side forms may be removed at any time not less than 24 hours after placing the concrete, but the entire pile shall remain supported for at least seven days and shall not be subjected to any handling stress until the concrete has set for at least 21 days or as determined by the Engineer.

(4) REINFORCEMENT

Reinforcement shall be placed in accordance with details shown on the Plans.

(5) CASTING

The pile may be cast in either a horizontal or a vertical position. Special care shall be taken to place the concrete so as to produce satisfactory bond with the reinforcement and avoid the formation of "stone pockets", honeycomb or other defects.

To secure uniformity and remove surplus water, the concrete in each pile shall be placed continuously and shall be compacted by vibrating or by other means acceptable to the Engineer. The forms shall be overfilled, the surplus concrete screeded off, and the top surfaces finished to a uniform, even texture similar to that produced by the forms.

(6) FINISH

Trestle piling exposed to view shall be finished above the ground line in accordance with the provisions governing the finishing of concrete columns. Foundation piling, that portion of the trestle piling which will be below the ground surface, and piles for use in sea water or alkali soils shall not be finished except by pointing as specified in Section 504.25

(7) CURING

Concrete piles shall be cured as provided elsewhere in these Specifications for concrete. As soon as the piles have set sufficiently they shall be removed from the forms and piled in a curing pile separated from each other by wood spacing blocks. No pile shall be driven until it has set for at least 21 days or as determined by the Engineer. Concrete piles for use in sea water or alkali soils shall be cured for not less than 30 days before being used.

503.14 STORAGE AND HANDLING OF PRECAST CONCRETE PILES

Removal of forms, curing, storing, transporting and handling precast concrete piles shall be done in such a manner as to avoid excessive bending stresses, cracking, spalling or other injurious results. The method of handling shall be such as will not induce stresses exceeding those specified in Section 1.5 when computed according to Article 1.4.5G of the Design Specifications.

Piles to be used in sea water or in alkali soils shall be handled so as to avoid surface abrasions or other injuries exposing the interior concrete.

503.15 MANUFACTURE OF CAST-IN-PLACE CONCRETE PILES

(1) GENERAL

Piles shall be constructed in accordance with details shown on the Plans.

(2) INSPECTION OF METAL SHELLS

At all times prior to the placing of concrete in the driven shells, the Contractor shall have available a suitable light for the inspection of each shell throughout its entire length. Any improperly driven, broken or otherwise defective shell shall be corrected to the satisfaction of the Engineer by removal and replacement, or the drivina of an additional pile, at no cost to the HA.

(3) CLASS OF CONCRETE

Class A or AE concrete shall be used for cast-in-place piles.

(4) REINFORCEMENT

Reinforcement shall be placed in accordance with the Plans or Special Provisions.

(5) PLACING CONCRETE

No concrete shall be placed until all driving within 8 meters has been completed, nor until all the shells for any one bent have been completely driven. If this cannot be done, all driving within the above limits shall be discontinued until the concrete in the last pile cast has set at least seven days.

Concrete shall be placed as specified for piles precast in the vertical position. Accumulation of water or any other foreign material in the shells shall be removed before concrete is placed.

503.16 EXTENSION OR "BUILD-UPS"

Extensions, splices or "build-ups" on concrete piles, when necessary, shall be made as follows:

After the driving is completed, the concrete at the end of the pile shall be cut away, leaving the reinforcement steel exposed for a length of 40 diameters. The final cut of the concrete shall be perpendicular to the axis of the pile. Reinforcement similar to that used in the pile shall be securely fastened to the projecting steel, and the necessary form work shall be placed, care being taken to prevent leakage along the pile. The concrete shall be of the same quality as that used in the pile. Just prior to placing concrete, the top of the pile shall be thoroughly wetted and covered with a thin coating of neat cement or other acceptable bonding material. The forms shall remain in place not less than seven days and shall then be carefully removed and the entire exposed surface of the pile finished as previously specified.

503.17 PAINTING STEEL PILES AND STEEL PILE SHELLS

Unless otherwise provided, when steel piles or steel pile shells extend above the ground surface or water surface, they shall be protected by three coats of paint, as specified for Painting Metal Structures in Section 514. This protection shall extend from an elevation 60cm (2 feet) below the water or ground surface to the top of the exposed steel.

503.18 METHOD OF MEASUREMENT

The length of timber, concrete and steel piles to be measured for payment shall be the total length in place in the completed work.

Pile loading tests will be measured in units of one.

No measurement for payment of pile cutoffs or splices will be made.

503.19 BASIS OF PAYMENT

Timber, steel and concrete piles will be paid for at the

contract unit price per meter for furnishing, driving and cutting off of the piles.

The contract unit price per meter shall include full compensation for furnishing, driving, cutting off of the pile and for furnishing all labor, materials, tools, equipment and incidentals necessary to complete the pile in place to the required bearing and penetration as shown on the Plans and as specified or as directed by the Engineer.

This contract unit price shall also include the filling materials for cast-in-place piles, constructing reinforced concrete extensions, splicing steel piles and steel shells, and furnishing and installing pile anchors and lugs, as shown on the Plans and as specified in the Special Provisions or as directed by the Engineer.

Full compensation for furnishing all reinforcing steel and prestressing in concrete piles and reinforcing steel in reinforced concrete extensions, including reinforcing steel required to extend beyond the lengths as shown on the Plans, shall be considered as included in the price paid per linear meter of pile, and no additional compensation will be allowed therefor.

Test piles driven to determine pile lengths and to become a part of the completed structure will be paid for at the contract prices for the type of piling used.

Full compensation for all jetting or other work necessary to obtain the specified penetration and bearing value of the piles, for all excavation and backfill involved in splicing or constructing concrete extensions shall be considered as included in the contract unit price paid per meter, and no additional compensation will be allowed therefor.

No payment will be made for piles driven out of place or for imperfect piles, or for piles which are damaged in handling or driving.

Pile loading tests will be paid for at the contract unit price of each

SECTION 504 CONCRETE MASONRY

504.01 GENERAL

Concrete masonry shall consist of Portland cement, aggregates and water which shall conform to the requirements of this section and which shall be proportioned as hereinafter specified.

504.02 MATERIALS

(1) CEMENT

(a) PORTLAND CEMENT

Six types of Portland cement are recognized by these Specifications, designated as follows:

Type I	For use in general concrete construction where the special properties specified under Types II and III are not required.
Type IA	Air-entraining Portland cement for the same uses as specified under Type I.
Type II	For use in general concrete construction exposed to moderate sulfate action where moderate heat of hydration is required.
Type IIA	Air-entraining Portland cement for the same uses as specified under Type II.
Type III	For use when high early strength is required.
Type IIIA	Air-entraining Portland cement for the same uses as specified under Type III.

Portland cement of the type or types specified shall conform to the requirements of AASHO Specifications for Portland Cement, M 85. Unless otherwise provided or called for in the Special Provisions, Type I shall be furnished.

Air-entraining Portland cement of the type or types specified shall conform to the above requirements. Unless otherwise provided or called for in the Special Provisions, Type IA shall be furnished.

(b) MASONRY CEMENT

Two types of masonry cement are recognized by these Specifications, as follows:

Type I For use in general purpose masonry.

Type II For use where high strength is required.

Masonry cement of the type or types specified shall conform to the requirements of AASHO Specifications for Masonry Cement, M 150 (ASTM C 91).

(c) NATURAL CEMENT

Natural cement shall conform to the requirements of AASHO Specifications for Natural Cement, M 135.

(d) SAMPLING AND TESTING

Hydraulic cements shall be sampled and tested in accordance with the standard methods referred to in the applicable Specifications of AASHO.

The Contractor shall notify the Engineer of dates of delivery so that there will be sufficient time for sampling the cement.

(2) WATER AND ADMIXTURE

(a) QUALITY OF WATER

Water for use with cement in mortar or concrete shall be subject to the approval of the Engineer. It shall not be salty and shall be reasonably clear and free

from oil, acid, injurious alkali or vegetable matter.

As soon as practicable, the Contractor shall give to the Engineer, in writing, the proposed source of water to be used for concrete masonry.

(b) TESTS FOR WATER

When required by the Engineer, the quality of the mixing water shall be determined by the Standard Method of Test for Quality of Water to be used in concrete, AASHO Methods of Sampling and Testing, Designation T 26.

In sampling water for testing, care shall be taken that the containers are clean and that samples are representative.

When comparative tests are made with a water of known satisfactory quality, any indication of unsoundness, marked change in time of setting or a reduction of more than 10 percent in mortar strength shall be sufficient cause for rejection of the water under test.

(c) ADMIXTURES

Admixtures in concrete should be used only when approved by the Engineer. Air-entraining admixtures shall conform to the requirements of AASHO Standard Specifications for Air-Entraining Admixtures for Concrete, M 154.

(3) FINE AGGREGATE

(a) FINE AGGREGATE

All fine aggregate for concrete shall conform to the Specification or Fine Aggregate for Portland Cement

Concrete, AASHO M 6. Soundness requirements, if required, will be stipulated in the Special Provisions.

(b) SAND FOR MORTAR

Sand for mortar shall conform to the Specifications for Mortar Sand, AASHO M 45.

(4) COARSE AGGREGATE

All coarse aggregate for concrete shall conform to the Specification for Coarse Aggregate for Portland Cement Concrete, AASHO M 80, as to quality, and to the Specification for Standard Sizes of Coarse Aggregate for Highway Construction, AASHO M 43, as to size.

504.03 CARE AND STORAGE OF CONCRETE AGGREGATES

The handling and storage of concrete aggregates shall be such as to prevent segregation or the admixture of foreign materials. The Engineer may require that aggregates be stored on separate platforms at satisfactory locations.

When noted in the Special Provisions, the coarse aggregate shall be separated into two or more sizes in order to secure greater uniformity of the concrete mixture. Different sizes of aggregate shall be stored in separate stockpiles sufficiently removed from each other to prevent the material at the edges of the piles from becoming intermixed. When space does not allow adequate separation, bulkheads (partitions) shall be built to separate the stockpiles.

504.04 STORAGE OF CEMENT

Cement shall be stored in suitable weatherproof buildings which will protect the cement from dampness. These buildings shall be placed in locations approved by the Engineer. Provisions

for storage shall be ample, and the shipments of cement as received shall be separately stored in such a manner as to provide easy access for the identification and inspection of each shipment. Storage buildings shall have a capacity for the storage of a sufficient quantity of cement to allow sampling at least 12 days before the cement is to be used. Stored cement shall meet the test requirements at any time after storage when a retest is ordered by the Engineer.

On small jobs, storage in the open may be permitted by written authorization from the Engineer, in which case a raised platform and ample waterproof covering shall be provided.

The Contractor shall keep accurate records of the deliveries of cement and of its use in work. Copies of these records shall be supplied to the Engineer in such form as may be required.

504.05 CLASSES OF CONCRETE

Ten classes of concrete are provided for in these specifications. Each class of concrete shall be used in that part of the structure where called for on the Plans or where designated by the Engineer. The following requirements shall govern unless otherwise noted :

Class A or Class AE concrete shall be used for all superstructures, except as noted below, and for reinforced substructures except where the sections are massive and lightly reinforced. The more important items of work included are slabs, beams, girders, columns, box culverts, reinforced abutments, retaining walls, reinforced footings, precast piles and cribbing. Concrete deposited in water shall be Class A with 10 percent additional cement.

Class A (AE) shall be used in all locations where the concrete will be exposed to salt water action.

Class B or Class B (AE) concrete shall be used in mass

footings, pedestals, massive pier shafts, gravity walls, with none or only a small amount of reinforcement.

Class C or Class C (AE) concrete shall be used in massive unreinforced sections.

Class X or Class X (AE) concrete shall be used in massive sections, lightly reinforced, where a higher grade than Class B or Class B (AE) is required.

Class Y or Class Y (AE) concrete shall be used in thin reinforced sections and for handrails except as specified for precast railing under "Railings".

504.06 COMPOSITION OF CONCRETE

The cement content, coarse aggregate size, consistency, air content if air-entrainment is required and the approximate weights of fine and coarse aggregate (saturated surface-dry basis) for each class of concrete shall be as shown in Tables I and IA.

The weight of fine and coarse aggregate given in Tables I and IA is based on the use of aggregates having bulk specific gravities, in a saturated surface-dry condition, of 2.65±05. For reasonably well-graded materials of normal physical characteristics, the use of the above indicated proportions, together with sufficient water to obtain the required consistency, will result in concrete of the specified cement content, plus or minus two percent. For aggregates having specific gravities outside the ranges indicated above, the weights shall be corrected by multiplying the weights shown in the table by the ratio of the specific gravity of the aggregate to be used and 2.65.

The relative weights of fine and coarse aggregate per sack of cement given in the above table are based on the use of a natural sand having a fineness modulus within the range of

TABLE 1

METRIC UNITS

CLASS OF Concrete	CEMENT CONTENT (50kg sacks)	COARSE AGGRE-GATE SIZE	CONSISTENCY (RANGE IN SLUMP)		AIR CONTENT	APPROXIMATE WEIGHTS (KILOGRAMS) (SATURATED SURFACE-DRY) OF AGGREGATE PER CUBIC METER OF CONCRETE			
			VIBRATED	NON-VIBR.	(RANGE)				
	SACKS PER CUBIC METER		CENTI-METERS	CENTI-METERS	PERCENT	ROUNDED COARSE AGGREGATE		ANGULAR COARSE AGGREGATE	
						FINE	COARSE	FINE	COARSE
A	7	25mm to 4.75mm	5-10	8-13	-	760	1070	805	945
A (AE)	7		5-10	8-13	4-7	695	1070	740	945
B	5	50mm to 4.75mm	2.5-5	5-8	-	710	1300	775	1180
B (AE)	5		2.5-5	5-8	3-6	650	1300	720	1180
C	4	50mm to 4.75mm	2.5-5	5-8	-	705	1315	775	1215
C (AE)	4		2.5-5	5-8	3-6	650	1315	725	1215
X	6	50mm to 4.75mm	2.5-5	5-8	-	680	1320	760	1190
X (AE)	6		2.5-5	5-8	3-6	610	1320	680	1190
Y	8	12.5mm to 4.75mm	5-10	8-13	-	875	815	890	755
Y (AE)	8		5-10	8-13	6-9	820	815	840	755

TABLE 1A

U.S. STANDARD UNITS

CLASS OF CONCRETE	CEMENT CONTENT (94lb sacks)	COARSE AGGRE-GATE SIZE	CONSISTENCY (RANGE IN SLUMP)		AIR CONTENT (RANGE)	APPROXIMATE WEIGHTS (POUNDS) (SATURATED SURFACE-DRY) OF AGGREGATE PER SACK OF CEMENT			
			VIBRATED	NON-VIBR.		ROUNDED COARSE AGGREGATE		ANGULAR COARSE AGGREGATE	
	SACKS PER CU. YD.		INCHES	INCHES	PERCENT	FINE	COARSE	FINE	COARSE
A	6.0	1 in-No.4	2-4	3-5	-	220	310	235	275
A (AE)	6.0	1 in-No.4	2-4	3-5	4-7	200	310	215	275
B	4.5	2 in-No.4	1-2	2-3	-	265	485	290	440
B (AE)	4.5	2 in-No.4	1-2	2-3	3-6	245	485	270	440
C	3.5	2 in-No.4	1-2	2-3	-	345	640	380	590
C (AE)	3.5	2 in-No.4	1-2	2-3	3-6	315	640	350	590
X	5.5	2 in-No.4	1-2	2-3	-	205	400	230	360
X (AE)	5.5	2 in-No.4	1-2	2-3	3-6	185	400	205	360
Y	7.0	½ in-No.4	2-4	3-5	-	215	200	220	185
Y (AE)	7.0	½ in-No.4	2-4	3-5	6-9	200	200	205	185

2.70 to 2.90 and methods of placing which do not involve high frequency vibration. When sharp, angular-manufactured sands, or extremely coarsely graded sands are used, the relative amount of fine aggregate should be increased. For finer sands the relative amount of fine aggregate should be decreased. In general, the least amount of sand which will insure concrete of the required workability for the placing conditions involved should be used. Any change in weight of fine aggregate made by the Engineer for the purpose of adjusting workability should always be compensated for by changing the weight of coarse aggregate in the opposite direction by a corresponding amount.

When air-entrained concrete is specified, and an air-entraining admixture is to be used, it shall be added to the batch at the plant by means of an approved mechanical dispenser or other approved method capable of acccurate measurement within a limit of accuracy of 3 percent. All dispensers shall include visual inspection aids, such as graduated transparent cylinders. Admixtures shall be dispensed in such a manner as will insure uniform distribution of the material throughout the batch within the specified mixing period.

It shall be the responsibility of the Contractor to use the quantity of agent necessary to obtain the designated air content within the allowable operating tolerance.

When a retarding admixture is specified or its use requested by the Engineer for increasing the workability or for delaying the set, it shall be added to the batch at the plant in a manner approved by the Engineer.

504.07 SAMPLING AND TESTING

Compliance with the requirements indicated in Section

504.06 shall be determined in accordance with the following standard methods of AASHO:

(a) Sampling fresh concrete. . . . . T 141 (ASTM C 172)
(b) Cement content . . . . . T 121 (ASTM C 138)
(c) Size of coarse aggregate . . . . . T 27
(d) Consistency slump . . . . . T 119 (ASTM C 143)
(e) Bulk specific gravity and absorption . T 84
T 85

Tests for strength (when required) shall be made in accordance with the following:

(a) Molding concrete specimens in the field . . T 23 (ASTM C 31)
(b) Compressive strength of molded cylinders . T 22 (ASTM C 39)

504.08 MEASUREMENT OF MATERIALS

Materials shall be measured by weighing, except as otherwise specified or where other methods are specifically authorized by the Engineer. The apparatus provided for weighing the aggregates and cement shall be suitably designed and constructed for this purpose. Each size of aggregate shall be weighed separately. If bulk cement is used, a separate bin, hopper, and scale shall be used. The accuracy of all weighing devices shall be such that successive quantities can be measured to within 1 percent of the desired amount. Cement in standard packages (sack) need not be weighed, but bulk cement shall be weighed. The mixing water shall be measured by volume or by weight. The water measuring device shall be susceptible of control accurate to plus or minus $\frac{1}{2}$ percent of the capacity of the tank. All measuring devices shall be subject to approval.

Where volumetric measurements are authorized by the Engineer for projects where the amount of concrete is small, the weight proportions shall be converted to equivalent volumetric proportions. In such cases, suitable allowance shall

be made for variations in the moisture condition of the aggregates, including the bulking effect in the fine aggregate.

When the aggregates contain more water than the quantity necessary to produce a saturated-dry condition as contemplated in Section 504.06, representative samples shall be taken and the moisture content determined for each kind of aggregate.

When sack cement is used, the quantities of aggregates for each batch shall be exactly sufficient for one or more full sacks of cement, and no batch requiring fractional sacks of cement will be permitted.

504.09 MIXING CONCRETE

(1) GENERAL

Unless otherwise authorized by the Engineer, concrete shall be machine-mixed at the site.

(2) MIXING AT SITE

Concrete shall be thoroughly mixed in a batch mixer of an approved size and type which will insure a uniform distribution of the materials throughout the mass.

The mixer shall be equipped with adequate water storage and a device for accurately measuring and automatically controlling the amount of water used in each batch. Preferably, mechanical means shall be provided for recording the number of revolutions for each batch and automatically preventing the discharge of the mixer until the materials have been mixed the specified minimum time.

The entire contents of the mixer shall be removed from the drum before materials for a succeeding batch are placed therein. No mixer having a rated capacity of less than a 1-bag batch shall be used, nor shall a mixer be charged in excess of its rated capacity.

All concrete shall be mixed for a period of not less than $1\frac{1}{2}$ minutes after all muterials, including water, are in the mixer. During the period of mixing, the mixer shall operate at the speed for which it has been designed, but this speed shall be not less than 14 nor more than 20 revolutions per minute.

The first batch of concrete materials placed in the mixer shall contain a sufficient excess of cement, sand and water to coat the inside of the drum without reducing the required mortar content of the mix. Upon the cessation of mixing for a considerable period, the mixer shall be thoroughly cleaned.

(3) TRUCK MIXING

Truck mixers, unless otherwise authorized by the Engineer, shall be of the revolving drum-type, watertight, and so constructed that the concrete can be mixed to insure a uniform distribution of materials throughout the mass. All solid materials for the concrete shall be accurately measured in accordance with Section 504.08, and charged into the drum at the proportioning plant. Except as subsequently provided, the truck mixer shall be equipped with a tank for carrying mixing water. Only the prescribed amount of water shall be placed in the tank, unless the tank is equipped with a device by which the quantity of water added can be readily verified. The mixing water may be added directly to the batch, in which case a tank shall not be required. Truck mixers may be required to be provided with means by which the mixing time can be readily verified by the Engineer.

The maximum size of batch in truck mixers shall not exceed the maximum-rated capacity of the mixer as stated by the manufacturer and stamped in metal on the mixer. Truck

mixing shall be continued for not less than 50 revolutions after all ingredients, including the water, are in the drum. The speed shall not be less than 4 r.p.m., nor more than a speed resulting in a peripheral velocity of the drum of 70 meters (225 feet) per minute. Not more than 100 revolutions of mixing shall be at a speed in excess of 6 r.p.m.. Mixing shall begin within 30 minutes after the cement has been added either to the water or aggregate.

When cement is charged into a mixer drum containing water or surface-wet aggregate, and when the temperature is above 32° C (90° F), or when high-early strength Portland cement is used, this limit shall be reduced to 15 minutes. The limitation on time between the introduction of the cement to the aggregates and the beginning of the mixing may be waived when, in the judgment of the Engineer, the aggregates are sufficiently free from moisture so that there will be no harmful effects on the cement.

(4) PARTIAL MIXING AT THE CENTRAL PLANT

When a truck mixer or an agitator provided with adequate mixing blades is used for transportation, the mixing time at the stationary machine mixer may be reduced to 30 seconds and the mixing completed in a truck mixer or agitator. The mixing time in the truck mixer or agitator equipped with adequate mixing blades shall be as specified for truck mixing.

(5) PLANT MIX

Mixing at a central plant shall conform to the requirements for mixing at the site.

(6) TIME OF HAULING AND PLACING MIXED CONCRETE

Concrete transported in a truck mixer,agitator or other

transportation device shall be discharged at the job and placed in its final position in the forms within $1\frac{1}{2}$ hours after the introduction of the mixing water to the cement and aggregate, except that in hot weather or under other conditions contributing to quick stiffening of the concrete, the maximum allowable time may be reduced by the Engineer. The maximum volume of mixed concrete transported in an agitator shall be in accordance with the specified rating.

(7) HAND MIXING

When hand mixing is authorized, it shall be done on a watertight platform and in such a manner as to insure a uniform distribution of the materials throughout the mass. Mixing shall be continued until a homogeneous mixture of the required consistency is obtained.

(8) DELIVERY

The organization supplying concrete shall have sufficient plant capacity and transporting apparatus to insure continuous delivery at the rate required. The rate of delivery of concrete during concreting operations shall be such as to provide for the proper handling, placing and finishing of the concrete. The rate shall be such that the interval between batches shall not exceed 20 minutes. The methods of delivering and handling the concrete shall be such as will facilitate placing, with the minimum of rehandling and without damage to the structure or the concrete.

(9) RETEMPERING

The concrete shall be mixed only in such quantities as are required for immediate use, and any which has developed

initial set shall not be used. Concrete which has partially hardened shall not be retempered or remixed.

504.10 HANDLING AND PLACING CONCRETE

(1) GENERAL

In preparation for the placing of concrete, all sawdust, chips and other construction debris and extraneous matter shall be removed from the interior of forms. Struts, stays and braces, serving temporarily to hold the forms in correct shape and alignment pending the placing of concrete at their locations, shall be removed when the concrete placing has reached an elevation rendering their service unnecessary. These temporary members shall be entirely removed from the forms and not buried in the concrete.

No concrete shall be used which does not reach its final position in the forms within the time stipulated under Section 504.09 (6).

Concrete shall be placed so as to avoid segregation of the materials and the displacement of the reinforcement. The use of long troughs, chutes and pipes for conveying concrete from the mixer to the forms shall be permitted only on written authorization of the Engineer. In case an inferior quality of concrete is produced by the use of such conveyors, the Engineer may order discontinuance of their use and the institution of a satisfactory method of placing.

Open troughs and chutes shall be of metal or metal-lined; where steep slopes are required, the chutes shall be equipped with baffles or be in short lengths that reverse the direction of movement.

All chutes, troughs and pipes shall be kept clean and free

from coatings of hardened concrete by thoroughly flushing with water each run. Water used for flushing shall be discharged clear of the structure.

When placing operations would involve dropping the concrete more than 1.5 meters (5 feet), it shall be deposited through sheet metal or other approved pipes. As far as practicable, the pipes shall be kept full of concrete during placing, and their lower ends shall be kept buried in the newly placed concrete. After initial set of the concrete, the forms shall not be jarred and no strain shall be placed on the ends of reinforcement bars which project.

Concrete, during and immediately after depositing, shall be thoroughly compacted. The compaction shall be done by mechanical vibration subject to the following provisions:

(a) The vibration shall be internal unless special authorization of other methods is given by the Engineer or as provided herein.

(b) Vibrators shall be of a type and design approved by the Engineer. They shall be capable of transmitting vibration to the concrete at frequencies of not less than 4500 impulses per minute.

(c) The intensity of vibration shall be such as to visibly affect a mass of concrete of 2.5cm (1 inch) slump over a radius of at least 45cm (18 inches).

(d) The Contractor shall provide a sufficient number of vibrators to properly compact each batch immediately after it is placed in the forms.

(e) Vibrators shall be manipulated so as to thoroughly work the concrete around the reinforcement and imbedded fixtures, and into the corners and angles of the forms.

Vibration shall be applied at the point of deposit and in the area of freshly deposited concrete. The vibrators shall be inserted and withdrawn out of the concrete slowly. The vibration shall be of sufficient duration and intensity to thoroughly compact the concrete, but shall not be continued so as to cause segregation. Vibration shall not be continued at any one point to the extent that localized areas of grout are formed.

Application of vibrators shall be at points uniformly spaced and not farther apart than twice the radius over which the vibration is visibly effective.

(f) Vibration shall not be applied directly or through the reinforcement to sections or layers of concrete which have hardened to the degree that the concrete ceases to be plastic under vibration. It shall not be used to make concrete flow in the forms over distances so great as to cause segregation, and vibrators shall not be used to transport concrete in the forms.

(g) Vibration shall be supplemented by such spading as is necessary to insure smooth surfaces and dense concrete along form surfaces and in corners and locations impossible to reach with the vibrators.

(h) The provisions of this section shall apply to precast piling and other precast members except that, if approved by the Engineer, the manufacturer's methods of vibrations may be used.

Concrete shall be placed in horizontal layers not more than 30cm (12 inches) thick except as hereinafter provided. When less than a complete layer is placed in one operation, it shall be terminated in a vertical bulkhead. Each layer shall be placed and compacted before the preceding batch

has taken initial set, to prevent injury to the freshly placed concrete and avoid surfaces of separation between the batches. Each layer shall be compacted so as to avoid the formation of a construction joint with a preceding layer which has not taken initial set.

When the placing of concrete is temporarily discontinued, the concrete, after becoming firm enough to retain its form, shall be cleaned of laitance and other objectionable material to a sufficient depth to expose sound concrete. To avoid visible joints as far as possible upon exposed faces, the top surface of the concrete adjacent to the forms shall be smoothed with a trowel. Where a "feather edge" might be produced at a construction joint, as in the sloped-top surface of a wing-wall, an inset form shall be used to produce a blocked-out portion in the preceding layer which shall produce an edge thickness of not less than 15cm (6 inches) in the succeeding layer. Work shall not be discontinued within 45cm (18 inches) of the top of any face unless provision has been made for a coping less than 45cm (18 inches) thick, in which case, if permitted by the Engineer, the construction joint may be made at the under side of the coping.

Immediately following the discontinuance of placing concrete, all accumulations of mortar splashed upon the reinforcement steel and the surfaces of forms shall be removed. Dried mortar chips and dust shall not be puddled into the unset concrete. If the accumulations are not removed prior to the concrete becoming set, care shall be exercised not to injure or break the concrete-steel bond at and near the surface of the concrete while cleaning the reinforcement steel.

(2) CULVERTS

In general, the base slab or footings of box culverts shall

be placed and allowed to set before the remainder of the culvert is constructed. In this case suitable provision shall be made for bonding the sidewalls to the culvert base, preferably by means of raised longitudinal keys so constructed as to prevent, as far as possible, the percolation of water through the construction joint.

Before concrete is placed in the sidewalls, the culvert footings shall be thoroughly cleaned of all shavings, sticks, sawdust or other extraneous material and the surface carefully chipped and roughened in accordance with the method of bonding construction joints as specified herein.

In the construction of box culverts 1.3 meters (4 feet) or less in height, the sidewalls and top slab may be constructed in one placement of concrete. When this method of construction is used, any necessary construction joints shall be vertical and at right angles to the axis of the culvert.

In the construction of box culverts more than 1.3 meters (4 feet) in height, the concrete in the walls shall be placed and allowed to set before the top slab is placed. In this case, appropriate keys shall be left in the sidewalls for anchoring the cover slab.

Each wing-wall shall be constructed, if possible, as a monolith. Construction joints, where unavoidable, shall be horizontal and so located that no joint will be visible in the exposed face of the wing-wall above the ground line.

3) GIRDERS, SLABS AND COLUMNS

For simple spans it is preferable that the concrete shall be deposited by beginning at the center of the span and working from the center toward the ends. Concrete in girders shall be deposited uniformly for the full length of

the girder and brought up evenly in horizontal layers. For continuous spans, where required by design considerations, the concrete-placing sequence shall be shown on the Plans or in the Special Provisions.

Concrete in girder haunches less than 1 meter (3 feet) in height shall be placed at the same time as that in the girder stem. The column or abutment tops shall be cut back to form seats for the haunches. Whenever any haunch or fillet has a vertical height of 1 meter (3 feet) or more, the abutment or columns, the haunch and the girder shall be placed in three successive stages; first, up to the lower side of the haunch; second, to the lower side of the girder; and third, to completion.

For haunched-continuous girders, the girder stem (including haunch) shall be placed to the top of stem. Where the size of the placement is such that it cannot be made in one placement, vertical construction joints shall preferably be located within the area of contraflexure.

Concrete in slab spans shall be placed in one continuous operation for each span unless otherwise provided.

The floors and girders of through-girder superstructures shall be placed in one continuous operation unless otherwise specified, in which case special shear anchorage shall be provided to insure monolithic action between girder and floor.

Concrete in T-beam or deck-girder spans may be placed in one continuous operation or may be placed in two separate operations, each of which shall be continuous; first, to the top of the girder stems; and second, to completion. In the latter case, the bond between stem and slab shall be positive and mechanical, and may be secured by means of suitable shear keys or by artificially roughening the

surface of the top of the girder stem. In general, suitable keys may be formed by the use of the timber blocks approximately 5 × 10cm (2 by 4 in.) in cross-section and having a length 10cm (4 in.) less than the width of the girder stem. These key blocks shall be spaced along the girder stems as required, but the spacing shall be not greater than 30cm (1 ft) center to center. The blocks shall be beveled and oiled in such manner as to insure their ready removal, and they shall be removed as soon as the concrete has set sufficiently to retain its shape.

Concrete in box girders may be placed in two or three separate operations. In either case the bottom slab shall be placed first. Bond between the bottom slab and stem shall be positive and mechanical. If the webs are placed separately from the top slab, bond between the top slab and webs shall be secured in the same manner as for T-beams. Requirements for shear keys for T-beams shall also apply to box girders, except that keys need not be deeper than the depth to the top of bottom slab reinforcement.

Concrete in columns shall be placed in one continuous operation, unless otherwise directed. The concrete shall be allowed to set at least 12 hours before the caps are placed.

Unless otherwise permitted by the Engineer, no concrete shall be placed in the superstructure until the column forms have been stripped sufficiently to determine the character of the concrete in the columns. The load of the superstructure shall not be allowed to come upon the bents until they have been in place at least 14 days, unless otherwise permitted by the Engineer.

504.11 VACANT

504.12 PUMPING

Placement of concrete by pumping will be permitted only

if specified in the Special Provisions or if authorized by the Engineer. The equipment shall be suitable in kind and adequate in capacity for the work, and shall be so arranged that no vibrations result that might damage freshly placed concrete. The pump shall be operated to produce a continuous stream of concrete without air pockets. After pumping is completed and if the concrete remaining in the pipeline is to be used, it shall be ejected without contamination or separation of the ingredients. After ejection of concrete in the line, the entire equipment shall be thoroughly cleaned.

The use of aluminum pipe or pumping equipment with aluminum parts which will come into contact with the concrete or concrete ingredients is prohibited.

504.13 DEPOSITING CONCRETE UNDER WATER

Concrete shall not be deposited in water except with the approval of the Engineer and under his immediate supervision; and in this case the method of placing shall be as hereinafter designated.

Concrete deposited in water shall be Class A with 10 percent excess cement. To prevent segregation, it shall be carefully placed in a compact mass, in its final position, by means of a tremie, a bottom-dump bucket or other approved method, and shall not be disturbed after being deposited. Still water shall be maintained at the point of deposit and the forms under water shall be water-tight.

For parts of structures under water, when possible, concrete seals shall be placed continuously from start to finish; the surface of the concrete shall be kept as nearly horizontal as practicable at all times. To insure thorough bonding, each succeeding layer of a seal shall be placed before the preceding layer has taken initial set.

A tremie shall consist of a tube having a diameter of not less than 25cm (10 inches), constructed in sections having flanged couplings fitted with gaskets. The tremie shall be supported so as to permit free movement of the discharge end over the entire top surface of the work and so as to permit rapid lowering when necessary to retard or stop the flow of concrete. The discharge end shall be closed at the start of work so as to prevent water entering the tube, and shall be entirely sealed at all times; the tremie tube shall be kept full to the bottom of the hopper. When a batch is dumped into the hopper, the flow of concrete shall be induced by slightly raising the discharge end, always keeping it in the deposited concrete. The flow shall be continuous until the work is completed.

Depositing of concrete by the drop-bottom bucket method shall conform to the following Specification. The top of the bucket shall be open. The bottom doors shall open freely downward and outward when tripped. The bucket shall be completely filled and slowly lowered to avoid backwash. It shall not be dumped until it rests on the surface upon which the concrete is to be deposited, and when discharged shall be withdrawn slowly until well above the concrete.

The slump of concrete shall be maintained between 10 and 20cm (4 and 8 inches).

Unwatering may proceed when the concrete seal is sufficiently hard and strong. All laitance or other unsatisfactory material shall be removed from the exposed surface by scraping, chipping or other means which will not injure the surface of the concrete.

504.14 CONSTRUCTION JOINTS

(1) GENERAL

Construction joints shall be made only where located on

the Plans or shown in the placing schedule, unless otherwise approved by the Engineer.

(2) BONDING

Before depositing new concrete on or against concrete which has hardened, the forms shall be retightened. The surface of the hardened concrete shall be roughened as required by the Engineer in a manner that will not leave loosened particles of aggregate or damaged concrete at the surface. It shall be thoroughly cleaned of foreign matter and laitance, and saturated with water. To insure an excess of mortar at the juncture of the hardened and the newly deposited concrete, the cleaned and saturated surfaces including vertical and inclined surfaces, shall first be thoroughly covered with a coating of mortar or neat cement grout against which the new concrete shall be placed before the grout has attained its initial set.

The placing of concrete shall be carried continuously from joint to joint. The face edges of all joints which are exposed to view shall be carefully finished true to line and elevation.

504.15 RUBBLE OR CYCLOPEAN CONCRETE

Rubble or cyclopean concrete shall consist of either Class B or C concrete, as specified, containing large embedded stones. It shall be used only with the approval of the Engineer in massive piers, gravity abutments and heavy footings. The stone for this class of work may be one-man stone or derrick stone conforming to the requirements of Section 507.02 (1).

The stone shall be carefully placed, not dropped or cast, so as to avoid injury to the forms or to the partially-set adjacent masonry. All stone shall be washed and saturated with water before placing.

The total volume of the stone shall not be greater than one-third of the total volume of the portion of the work in which it is placed. For walls or piers greater than 60cm (2 feet) in thickness, one-man stone may be used; each stone shall be surrounded by at least 15cm (6 inches) of concrete; and no stone shall be closer than 30cm (1 foot) to any top surface nor any closer than 15cm (6 inches) to any coping. For walls or piers greater than 1.2 meters (4 feet) in thickness, derrick stone may be used; each stone shall be surrounded by at least 30cm (1 foot) of concrete; and no stone shall be closer than 60cm (2 feet) to any top surface nor closer than 20cm (8 inches) to any coping.

504.16 CONCRETE EXPOSED TO SEA WATER

Unless otherwise specifically provided, concrete for structures exposed to sea water shall be Class A (AE) concrete as specified in Section 504.06. Unless indicated otherwise on the Plans or in the Special Provisions, the clear distance from the face of the concrete to the nearest face of reinforcement steel shall be not less than 10cm (4 inches). The concrete shall be mixed for a period of not less than 2 minutes and the water content of the mixture shall be carefully controlled and regulated so as to produce concrete of maximum impermeability. The concrete shall be thoroughly compacted and stone pockets shall be avoided. No construction joints shall be formed between levels of extreme low water and extreme high water as determined by the Engineer. Between these levels sea water shall not come in direct contact with the concrete for a period of not less than 30 days. The original surface, as the concrete comes from the forms, shall be left undisturbed.

504.17 CONCRETE EXPOSED TO ALKALI SOILS OR ALKALI WATER

Where concrete may be exposed to the action of alkaline

waters or soils, special care shall be taken to place it in accordance with placing Specifications herein. Whenever possible, placing shall be continuous until completion of the section or until the concrete is at least 45cm (18 inches) above ground or water level. Alkaline waters or soils shall be kept from contact with the concrete during placement and for a period of at least 72 hours thereafter.

504.18 FALSEWORK AND CENTERING

Unless otherwise provided, detailed plans for falsework or centering shall be supplied to the Engineer on request, but, in no case shall the Contractor be relieved of responsibility for results obtained by the use of these Plans.

For designing falsework and centering, a weight of 2400 kgs per cubic meter (150 pounds per cubic foot) shall be assumed for plastic concrete. All falsework shall be designed and constructed to provide the necessary rigidity and to support the loads, without appreciable settlement or deformation. The Engineer may require the Contractor to employ screw jacks or hardwood wedges to take up any settlement in the formwork either before or during the placing of concrete.

Falsework which cannot be founded on a satisfactory footing shall be supported on piling which shall be spaced, driven, and removed in a manner approved by the Engineer.

Falsework shall be set to give the finished structure the camber specified or indicated on the Plans.

Arch centering shall be constructed according to centering plans approved by the Engineer. Provision shall be made by means of suitable wedges, sand boxes, or other devices for the gradual lowering of centers, and rendering the arch self-supporting. When directed, centering shall be placed upon approved jacks in order to take up and correct any slight

settlement which may occur after the placing of masonry has begun.

504.19 FORMS

Forms shall be built mortar-tight and of sufficient rigidity to prevent distortion due to the pressure of the concrete and other loads incident to the construction operations. Forms shall be constructed and maintained so as to prevent warping and the opening of joints due to shrinkage of the lumber.

The forms shall be substantial and unyielding and shall be so designed that the finished concrete conforms to the proper dimensions and contours. The design of the forms shall take into account the effect of vibration of concrete as it is placed.

Forms shall be filleted at all sharp corners and shall be given a bevel to insure easy removal.

Metal ties or anchorages within the forms shall be so constructed as to permit their removal to a depth of at least 5cm (2 inches) from the face without injury to the concrete. In case ordinary wire ties are permitted, all wires, upon removal of the forms, shall be cut back at least 7mm ($\frac{1}{4}$ inch) from the face of the concrete with chisels or nippers; for green concrete, nippers are necessary. All fittings for metal ties shall be of such design that, upon their removal, the cavities which are left be of the smallest possible size. The cavities shall be filled with cement mortar and the surface left sound, smooth, even, and uniform in color.

All forms shall be set and maintained true to the line designated, until the concrete is sufficiently hardened. Forms shall remain in place for periods which shall be determined as hereinafter specified. When forms appear to be unsatisfactory in any way, either before or during the placing of concrete, the

Engineer shall order the work stopped until the defects have been corrected.

The shape, strength, rigidity, watertightness, and surface smoothness of reused forms shall be maintained at all times. Any warped or bulged lumber must be resized before being reused. Forms which are unsatisfactory in any respect shall not be reused.

For narrow walls and columns where the bottom of the form is inaccessible, the lower form boards shall be left loose so that they may be removed for cleaning the inside areas of dirt, wood chips and similar material immediately before placing the concrete.

All forms shall be treated with oil or saturated with water immediately before placing the concrete. For rail members or other members with exposed faces, the forms shall be treated with an approved oil to prevent the adherence of concrete. Any material which will adhere to or discolor the concrete shall not be used.

504.20 REMOVAL OF FALSEWORK AND FORMS

If field operations are not controlled by beam or cylinder tests, the following period, for removal of forms and supports, may be used as a guide:

Arch centers	14 days
Centering under beams	14 days
Floor slabs	7-14 days
Walls	12-24 hours
Columns	1-7 days
Side of beams and all other parts	12-24 hours

If high-early strength cement is used, these periods may be reduced as directed by the Engineer.

If field operations are controlled by beam or cylinder tests, the removal of forms and supports may be begun when the strengths reach values which shall be fixed by the Engineer for the particular method of testing which is to be used. The beams or cylinders shall be cured under conditions which are not more favorable than the most unfavorable conditions for the portions of the concrete which the beams or cylinders represent.

Methods of form removal likely to cause over-stressing of the concrete shall not be used. In general, the forms shall be removed from the bottom upwards. Forms and their supports shall not be removed without the approval of the Engineer. Supports shall be removed in such a manner as to permit the concrete to uniformly and gradually take the stresses due to its own weight.

In general, arch centering shall be struck and the arch made self-supporting before the railing or coping is placed. This precaution is essential in order to avoid jamming of the expansion joints and variations in alignment. For filled spandrel arches, such portions of the spandrel walls shall be left for construction subsequent to the striking of centers, as may be necessary to avoid jamming of the expansion joints.

Centers shall be gradually and uniformly lowered in such a manner as to avoid injurious stresses in any part of the structure. In arch structures of two or more spans, the sequence of striking centers shall be specified or approved by the Engineer.

504.21 LOADING OF CONCRETE

No superstructure load shall be placed on concrete bents, piers or abutments without the Engineer's permission. The minimum time allowed before any superstructure load shall be placed on the substructure is seven days.

Static loads such as forms and other materials necessary to construction may be placed on any concrete after it has been in place 72 hours, provided proper curing is maintained.

Except as provided above, no material other than that required for actual curing operations shall be placed on concrete structures or concrete bridge deck during curing, and concrete decks shall be carefully barricaded from traffic.

The Contractor shall keep all bridge decks free of all motor vehicles and heavy equipment for the entire period from the time of placement of the bridge deck until at least 14 days after placement of the concrete curbs or sidewalks, and in no case shall the Contractor allow loads over the completed structure in excess of the legal loads permitted for the completed highway.

504.22 CURING CONCRETE

Concrete surfaces exposed to conditions causing premature drying shall be protected by covering as soon as possible with canvas, straw, burlap, sand, other satisfactory material and shall be kept moist. Curing compounds conforming to the requirements of AASHO Standard Specifications for Liquid Membrane-Forming Compounds for Curing Concrete M 148, Types 1, 2 or 3 may be used with prior approval of the Engineer. If the surfaces are not covered, they shall be kept moist by flushing or sprinkling. Curing shall continue for a period of not less than seven days after placing the concrete. If high-early strength cement is used, this period may be reduced as directed by the Engineer. Other precautions to insure the development of strength shall be taken, as the Engineer may direct.

504.23 EXPANSION AND FIXED JOINTS AND BEARINGS

All joints shall be constructed according to details shown on the Plans.

(1) OPEN JOINTS

Open joints shall be placed in the locations shown on the Plans and shall be constructed by the insertion and subsequent removal of a wood strip, metal plate or other approved material. The insertion and removal of the template shall be accomplished without chipping or breaking the corners of the concrete. Reinforcement shall not extend across an open joint unless so specified on the Plans.

(2) FILLED JOINTS

Poured expansion joints shall be constructed similar to open joints. When premolded types are specified, the filler shall be in correct position when the concrete on one side of the joint is placed. When the form is removed, the concrete on the other side shall be placed. Adequate water stops of metal, rubber or plastic shall be carefully placed, as shown on the Plans.

(3) PREMOLDED EXPANSION JOINT FILLERS

Non-extruding and resilient types shall conform to the Specification for Preformed Expansion Joint Fillers for Concrete of the AASHO M 153 (ASTM D 1752).

Bituminous fiber types shall conform to the Specification for Preformed Expansion Joint Fillers for Concrete, AASHO M 213 (ASTM D 1751).

Bituminous type filler shall conform to the Specification for Preformed Expansion Joint Filler for Concrete, AASHO M 33.

(4) STEEL JOINTS

The plates, angles or other structural shapes shall be accurately shaped, at the shop, to conform to the section of the concrete deck. The fabrication and painting shall

conform to the requirements of the Specifications covering those items. When called for on the Plans or in the Special Provisions, the material shall be galvanized in lieu of painting. Care shall be taken to insure that the surface in the finished plane is true and free of warping. Positive methods shall be employed in placing the joints to keep them in correct position during the placing of the concrete. The opening at expansion joints shall be that designated on the Plans at normal temperature; care shall be taken to avoid clearance impairment.

(5) WATER STOPS

Adequate water stops of metal, rubber or plastic shall be placed as shown on the Plans. Where movement at the joint is provided for, the water stops shall be of a type permitting such movement without injury. They shall be spliced, welded or soldered to form continuous watertight joints.

(6) SHEET COPPER

Sheet copper shall conform to the Specification for Copper Sheet, Strip and Plate, AASHO M 138 (ASTM B 152).

(7) BEARING DEVICES

Bearing plates, rockers and other expansion devices shall be constructed according to details shown on the Plans. Unless set in plastic concrete or as otherwise specified, they shall be set in grout to insure uniform bearing. Structural steel and painting shall conform to the Specifications for those items. When called for on the Plans or in the Special Provisions, the material shall be galvanized in lieu of painting. The rockers or other expansion devices shall be set to conform to the temperature at the time of erection.

504.24 FINISHING CONCRETE SURFACES - GENERAL

Surface finishes shall be classified as follows:

Class 1. Ordinary Surface Finish

Class 2. Rubbed Finish

Class 3. Floated Surface Finish

All concrete shall be given Class 1, Ordinary Surface Finish, and in addition, if further finishing is required, such other type of finish as is specified. If not otherwise specified, the following surfaces shall be given a Class 2, Rubbed Finish: the exposed faces of piers, abutments, wing-walls, and retaining walls; the outside faces of girders, T-beams, slabs, columns, brackets, curbs, headwalls, railings, arch rings, spandrel walls, and parapets; but not on the tops and bottoms of floor slabs and sidewalks, bottoms of beams and girders, sides of interior beams and girders, backwalls above bridge seat, or the underside of copings. The surface finish on piers and abutments shall include all exposed surfaces below bridge seat to low water elevation or 30cm (1 foot) below finish ground line when such ground line is above the water surface. Wing-walls shall be finished from the top to 30cm (1 foot) below the finish slope lines on the outside face, and shall be finished on top and for a depth of 30cm (1 foot) below the top on the back sides.

Unless otherwise specified, roadway floors shall be given Class 3, Floated Surface Finish.

504.25 CLASS 1, ORDINARY SURFACE FINISH

Immediately following the removal of forms, all fins and irregular projections shall be removed from all surfaces except from those which are not to be exposed or are not to be waterproofed. On all surfaces the cavities produced by form ties and all other holes, honeycomb spots, broken corners or edges, and other defects shall be thoroughly cleaned, and after having been

kept saturated with water for a period of not less than three hours shall be carefully pointed and trued with a mortar of cement and fine aggregate mixed in the proportions used in the grade of the concrete being finished. Mortar used in pointing shall be not more than one-hour old. The mortar patches shall be cured as specified under Section 504.22. All construction and expansion joints in the completed work shall be left carefully tooled and free of all mortar and concrete. The joint filler shall be left exposed for its full length with clean and true edges.

The resulting surfaces shall be true and uniform. All repaired surfaces, the appearance of which is not satisfactory to the Engineer, shall be "rubbed" as specified under Section 504.26.

504.26 CLASS 2, RUBBED FINISH

After removal of forms, the rubbing of concrete shall be started as soon as its condition will permit. Immediately before starting this work the concrete shall be kept thoroughly saturated with water for a minimum period of three hours. Sufficient time shall have elapsed before the wetting down to allow the mortar used in the pointing of rod holes and defects to thoroughly set. Surfaces to be finished shall be rubbed with a medium coarse carborundum stone, using a small amount of mortar on its face. The mortar shall be composed of cement and fine sand, mixed in proportions used in the concrete being finished. Rubbing shall be continued until all form marks, projections and irregularities have been removed, all voids filled, and a uniform surface has been obtained. The paste produced by this rubbing shall be left in place at this time.

After all concrete above the surface being treated has been cast, the final finish shall be obtained by rubbing with a fine carborundum stone and water. This rubbing shall be continued until the entire surface is of a smooth texture and uniform color.

After the final rubbing is completed and the surface has dried, it shall be rubbed with burlap to remove loose powder and shall be left free from all unsound patches, paste, powder and objectionable marks.

504.27 CLASS 3, FLOATED SURFACE FINISH

(1) STRIKING OFF

After the concrete is compacted as specified under Section 504.10 (1), the surface shall be carefully rodded and struck off with a strike board to conform to the cross-section and grade shown on the Plans. Proper allowance shall be made for camber, if required. The strike board may be operated longitudinally or transversely and shall be moved forward with a combined longitudinal and transverse motion, the manipulation being such that neither end is raised from the side forms during the process. A slight excess of concrete shall be kept in front of the cutting edge at all times.

(2) FLOATING

After striking off and consolidating as specified above, the surface shall be made uniform by longitudinal or transverse floating, or both. Longitudinal floating will be required except in places where this method is not feasible.

(3) LONGITUDINAL FLOATING

The longitudinal float, operated from foot bridges, shall be worked with a sawing motion while held in a floating position parallel to the road centerline and passing gradually from one side of the pavement to the other. The float shall then be moved forward one-half of its length and the above operation repeated. Machine floating, which

produces equivalent results, may be substituted for the above hand method.

(4) TRANSVERSE FLOATING

The transverse float shall be operated across the pavement by starting at the edge and slowly moving to the center and back again to the edge. The float shall then be moved forward one-half of its length and the above operations repeated. Care shall be taken to preserve the crown and cross-section of the pavement.

(5) STRAIGHTEDGING

After the longitudinal floating has been completed and the excess water removed, but while the concrete is still plastic, the slab surface shall be tested for trueness with a straightedge. For this purpose, the Contractor shall furnish and use an accurate 3-meter (10-foot) straightedge swung from handles 1 meter (3 feet) longer than one-half the width of the slab.

The straightedge shall be held in successive positions parallel to the road centerline and in contact with the the surface, and the whole area gone over from one side of the slab to the other as necessary. Advancement along the deck shall be in successive stages of not more than one-half the length of the straightedge. Any depressions found shall be immediately filled with freshly mixed concrete, struck off, consolidated and refinished. High areas shall be cut down and refinished. The straightedge testing and refloating shall continue until the entire surface is found to be free from observable departures from the straightedge and the slab has the required grade and contour, until there are no deviations of more than 3mm (1/8 inch) under the 3-meter (10-foot) straightedge.

(6) FINAL FINISHING

When the concrete has hardened sufficiently, the surface shall be given a broom finish. The broom shall be of an approved type. The strokes shall be square across the slab, from edge to edge, with adjacent strokes slightly overlapped, and shall be made by drawing the broom, without tearing the concrete but so as to produce regular corrugations not over 3mm (1/8 inch) in depth. The surface thus finished shall be free from porous spots, irregularities, depressions, and small pockets or rough spots such as may be caused by accidental disturbing, during the final brooming, of particles of coarse aggregate embedded near the surface.

504.28 SIDEWALK FINISH

After the concrete has been deposited in place, it shall be compacted and the surface shall be struck off by means of a strike board and floated with a wooden or cork float. An edging tool shall be used on all edges and at all expansion joints. The surface shall not vary more than 3mm (1/8 inch) under a 3-meter (10-foot) straightedge. The surface shall have a granular or matte texture which will not be slick when wet.

Sidewalk surfaces shall be laid out in blocks with an approved grooving tool as shown on the Plans or as directed by the Engineer.

SECTION 504.29 THROUGH 504.32: VACANT

504.33 PRESTRESSED CONCRETE

(1) GENERAL

The construction of prestressed concrete members shall conform to the requirements of preceding Articles in this Section, except as those requirements are modified or supplemented by the provisions which follow.

Prior to casting, the Contractor shall submit fabrication drawings for the Engineer's approval which show complete details of the proposed method, materials, and equipment to be used in the prestressing operation. Such details shall outline the method and sequence of stressing, complete Specifications and details of the proposed prestressing steel and anchoring devices, reinforcement, conduit, enclosures and other such information necessary for the fabrication and erection of the prestressed concrete members.

(2) SUPERVISION

Unless specifically permitted by the Engineer, the Contractor or Fabricator shall provide a technician, skilled in the use of the system of prestressing to be used, who shall supervise the work and give the Engineer such assistance as in his judgment may be necessary.

(3) EQUIPMENT

The Contractor or Fabricator shall provide all equipment necessary for the construction and the prestressing. Prestressing shall be done with approved jacking equipment. If hydraulic jacks are used, they shall be equipped with accurately-reading pressure gages. The combination of jack and gage shall be calibrated, and a graph or table showing the calibration shall be furnished the Engineer. Should other types of jacks be used, calibrated proving rings or other devices shall be furnished so that the jacking forces may be accurately known.

(4) CONCRETE

Concrete shall be controlled, mixed and handled as specified in other Articles of this Section except that, with the approval of the Engineer, the cement content may be increased by the Contractor to meet the strength requirements specified on the approved fabrication drawings.

The compressive strength of the concrete will be determined from concrete test cylinders sampled from the same concrete and cured under conditions similar to those used to cure the prestressed unit.

Concrete shall not be deposited in the forms until the Engineer has inspected and approved the forms, the placing of the reinforcing, conduits, anchorages and prestressing steel.

The concrete shall be vibrated internally or externally, or both, as ordered by the Engineer. The vibrating shall be done with care in such a manner as to avoid displacement of reinforcing, conduits or wires.

(5) STEAM CURING

Steam curing shall be done under a suitable enclosure to contain the live steam and minimize moisture and heat losses. The initial application of the steam shall be from two to four hours after the final placement of concrete, to allow the initial set of the concrete to take place. If retarders are used, the waiting period before application of the steam shall be increased to from four to six hours. The steam shall be at 100 percent relative humidity to prevent loss of moisture and to provide excess moisture for proper hydration of the cement. Application of the steam shall not be directly on the concrete. During application of the steam, the ambient air temperature shall increase at a rate not to exceed 22°C (40 F) per hour until a maximum temperature of from 60°C to 70°C (140 F to 160 F) is reached. The maximum temperature shall be held until the concrete has reached the desired strength.

When the desired concrete strength has been reached, steam curing may be discontinued. The members shall be detensioned immediately after termination of steam curing,

while the concrete and forms are still warm. In discontinuing the steam, the ambient air temperature shall not decrease at a rate to exceed 22°C (40 F) per hour until a temperature has been reached about 10°C (20 F) above the temperature of the air to which the concrete will be exposed.

(6) TRANSPORTATION AND STORAGE

Precast girders should be transported in an upright position, and points of support and directions of the reactions with respect to the girder should be approximately the same during transportation and storage as when the girder is in its final position. In the event that the Contractor deems it expedient to transport or store precast girders in other than this position, it shall be done at his own risk.

Care shall be taken during storage, hoisting and handling of the precast units to prevent cracking or damage. Units damaged by improper storing or handling shall be replaced by the Contractor at his expense.

(7) PRETENSIONING METHOD

The prestressing elements shall be accurately held in position and stressed by jacks. A record shall be kept of the jacking force and the elongations produced thereby. Several units may be cast in one continuous line and stressed at one time. Sufficient space shall be left between ends of units to permit access for cutting after the concrete has attained the required strength. No bond stress shall be transferred to the concrete, nor shall end anchors be released until the concrete has attained a compressive strength, as shown by standard cylinders made and cured identically with the members, of at least the minimum strength shown on the Plans or in the Specifications for

such transfer of load. The elements shall be cut or released in such an order that lateral eccentricity of prestress will be a minimum.

(8) POST-TENSIONING METHOD

The tensioning process shall be conducted so that the tension being applied and the elongation may be measured at all times.

The friction loss shall be estimated as provided in Article 1.6.7 of Design Specifications. A record shall be kept of gage pressures and elongations at all times and submitted to the Engineer for his approval. Loads shall not be applied to the concrete until it has attained strength as specified in Section 504.23 (7) for pretensioning method.

(9) GROUTING OF BONDED STEEL

Post-tensioned prestressed bridge members preferably shall be of the bonded type in which the tensioned steel is installed in holes or flexible metal ducts cast in the concrete and bonded to the surrounding concrete by filling the tubes or ducts with grout. The grout shall be a mixture of cement and fine sand passing a 0.60mm sieve (No. 30) in the approximate proportions of one part cement to 0.75 part sand, the exact proportion to be adjusted to form a grout having the proper consistency.

All prestressing reinforcement to be bonded shall be free of dirt, loose rust, grease or other deleterious substances. Before grouting, the ducts shall be free of water, dirt or any other foreign substance. The ducts shall be blown out with compressed air until no water comes through the duct.

For long members with draped strands an open tap at the low point of the duct may be necessary.

The grout shall be fluid (consistency of thick paint) but proportioned so that free water will not separate out of the mix. Unpolished aluminum powder may be added in an amount of one to two teaspoons per sack of cement. Commercial plasticizers used in accordance with the manufacturer's recommendation may be used, provided they contain no ingredients that are corrosive to steel. Sufficient pressure shall be used in grouting to force the grout completely through the duct, care being taken that rupturing of the ducts does not occur.

(10) PRESTRESSING REINFORCEMENT

Prestressing reinforcement shall be high-tensile-strength steel wire, high-tensile-strength seven-wire strand, or high-tensile-strength alloy bars, as called for on the Plans or in the Special Provisions.

High-tensile-strength steel wire shall conform to AASHO M 204 (ASTM A 421).

High - tensile - strength seven - wire strand shall conform to the requirements of AASHO M 203 (ASTM A 416).

High-tensile-strength alloy bars shall be stress relieved and then cold stretched to a minimum of 9,140 kgs/cm^2 (130,000 psi).

After cold stretching, the physical properties shall be as follows:

Minimum ultimate tensile strength	10,200 kgs/cm^2 (145,000 psi)

Minimum yield strength, measured by the 0.7 percent extension under load method, shall be not less than	9,140 kgs/cm² (130,000 psi)
Minimum modulus of elasticity	1,760,000 kgs/cm² (25,000,000 psi)
Minimum elongation in 20-bar diameters after rupture	4 percent
Diameter tolerance	+0.76 mm (+0.03")
	−0.25 mm (−0.01")

(11) TESTING PRESTRESSING REINFORCEMENT AND ANCHORAGES

All wire, strand or bars to be shipped to the site shall be assigned a lot number and tagged for identification purposes. Anchorage assemblies to be shipped shall be likewise identified.

All samples submitted shall be representative of the lot to be furnished and, in the case of wire or strand, shall be taken from the same master roll.

All of the materials specified for testing shall be furnished free of cost and shall be delivered in time for tests to be made well in advance of anticipated time of use.

Where the Engineer intends to require nondestructive testing of one or more parts of the structure, Special Specifications shall be drawn giving the required details of the work.

The vendor shall furnish for testing the following samples selected from each lot. If ordered by the Engineer, the

selection of samples shall be made at the manufacturer's plant by the Inspector.

PRETENSIONING METHOD — For pretensioned strands, one sample at least 2.2 meters (7 feet) long shall be furnished, in accordance with the requirements of paragraph 7.1, AASHO M 203.

POST-TENSIONING METHOD — The following lengths shall be furnished :

For wires requiring heading — 1.52 meters (5 feet).

For wires not requiring heading — sufficient length to make up one parallel-lay cable 1.52 meters (5 feet) long, consisting of the same number of wires as the cable to be furnished.

For strand to be furnished with fittings—1.52 meters (5 feet) between near ends of fittings.

For bars to be furnished with threaded ends and nuts—1.52 meters (5 feet) between threads at ends.

ANCHORAGE ASSEMBLIES-Two anchorage assemblies shall be furnished, complete with distribution plates of each size or type to be used, if anchorage assemblies are not attached to reinforcement samples.

504.34 METHOD OF MEASUREMENT

The quantity of concrete to be measured for payment shall be the number of cubic meters of concrete in the structure as computed in accordance with the dimensions shown on the Plans. The quantity of concrete involved in fillets, scorings, and chamfers 6.5 square centimeters (1 square inch) or less in cross-sectional area shall be neglected.

Deductions from the computed volumes of concrete, measured for payment, shall be made as follows :

(1) The volume of structural steel, including steel pilings, encased in concrete.

(2) The volume of timber piles encased in concrete, assuming the volume to be 0.075 cubic meters per linear meter of pile (0.8 cubic foot per linear foot of pile).

(3) The volume of concrete piles encased in concrete.

No deduction from the computed volume of concrete, measured for payment, will be made for the volume of concrete displaced by steel reinforcement, expansion joint material, scuppers, weep holes, conduits, inset panels of 4 centimeters ($1\frac{1}{2}$ inches) or less in depth, or any pipe less than 20 centimeters (8 inches) in diameter.

The volume of concrete measured for payment will not include concrete contained in other bid items when payment for the other items include the concrete involved.

The quantity of prestressed concrete units to be measured for payment shall be the actual number of prestressed concrete structural members, except piling installed complete, in place and accepted. Each member shall include the concrete, reinforcement and prestressing steel, enclosures for prestressing steel, bearing plates and rockers, anchor bolts and nuts, and other such material contained within or attached to the unit.

If handrail is a separate bid item, that portion of the railing above the top of the roadway curb, or that portion above the surface of the sidewalk shall not be included in

the volume of concrete measured for payment but shall be paid for as handrail.

When it is impracticable to compute the volume of concrete from Plan dimensions, such as a concrete seal, the core concrete when using rubble masonry and other difficult-to-measure volumes, the Engineer may determine the volume of concrete from bag count, truck count or other acceptable method.

504.35 BASIS OF PAYMENT

The accepted quantities of cast-in-place concrete will be paid for at the contract unit-price per cubic meter for the various types, and shall include compensation for all equipment, tools, material, falsework, forms, bracing, labor, surface finishing and all other items of expense to complete the work shown on the Plans,, with the exception of reinforcing steel. The payment of concrete shall include the cost of joint fillers, metal drains, expansion joints and miscellaneous metal devices, unless they are covered by other items in the contract.

The precast, prestressed member, except piling, shall be paid for at the contract unit-price bid per member, determined as provided above, complete in place; and payment shall constitute full compensation for furnishing the member, transportation and erecting complete in place, and for all labor, equipment, tools and incidentals necessary to complete the item.

SECTION 505 REINFORCEMENT

505.01 MATERIAL

(1) BAR REINFORCEMENT

Bar reinforcement for concrete in sizes up to and including No. 18 shall conform to the requirements of the Specifications for Deformed Billet-Steel Bars for Concrete Reinforcement, AASHO M 31 (ASTM A 615); or Rail-Steel Bars for Concrete Reinforcement, AASHO M 42, with the following modifications:

(a) The use of cold twisted bars is not permitted.

(b) Steel for all bars shall be made by the open-hearth, electric furnace or basic oxygen process, unless otherwise called for in the Special Provisions or on the Plans.

(2) WIRE AND WIRE MESH

Wire shall conform to the Specification for Cold-Drawn Steel Wire for Concrete Reinforcement, AASHO M 32 (ASTM A 82).

Wire mesh, when used as reinforcement in concrete, shall conform to the Specification for Welded Steel Wire Fabric for Concrete Reinforcement, AASHO M 55 (ASTM A 185). The type of mesh shall be approved by the Engineer.

(3) BAR MAT REINFORCEMENT

Bar mat reinforcement for concrete shall conform to the Specification for Fabricated Steel Bar or Rod Mats for Concrete Reinforcement, AASHO M 54 (ASTM A 184).

(4) STRUCTURAL SHAPES

Structural shapes used as reinforcement in concrete shall

conform to the requirements for structural steel as provided in these Specifications.

505.02 ORDER LISTS

Before ordering material, all order lists and bending diagrams shall be furnished by the Contractor for the approval of the Engineer, and no materials shall be ordered until such lists and bending diagrams have been approved. The approval of order lists and bending diagrams by the Engineer shall in no way relieve the Contractor of responsibility for the correctness of such lists and diagrams. Any expense incident to the revision of material furnished in accordance with such lists and diagrams to make it comply with the design drawings shall be borne by the Contractor.

505.03 PROTECTION OF MATERIAL

Steel reinforcement shall be protected at all times from injury. When placed in the work, it shall be free from dirt, detrimental scale, paint, oil or other foreign substance. However, when steel has, on its surface, detrimental rust, loose scale or rust which is easily removable, it may be cleaned by a satisfactory method, if approved by the Engineer.

505.04 FABRICATION

Bar reinforcement shall be bent to the shapes shown on the Plans.

All bars shall be bent cold, unless otherwise permitted by the Engineer. No bars partially imbedded in concrete shall be field-bent except as shown on the Plans or specifically permitted by the Engineer.

The radii of bend measured on the inside of the bar for standard hooks shall be not less than the following:

BAR SIZE	MINIMUM RADII
3,4 OR 5	$2^1/_2$ BAR DIAMETERS
6,7 OR 8	3 BAR DIAMETERS
9,10 OR 11	4 BAR DIAMETERS

$2^1/_2$ BAR DIAMETERS FOR BILLET STEEL

Bends for stirrups and ties shall have radii on the inside of the bar not less than one bar diameter. Bends for all other bars shall have radii on the inside of the bar not less than the values tabulated in the preceding paragraphs.

Bar reinforcement shall be shipped in standard bundles, tagged and marked.

505.05 PLACING AND FASTENING

All steel reinforcement shall be accurately placed in the positions shown on the Plans and firmly held during the placing and setting of concrete. When placed in the work, it shall be free from dirt, detrimental rust, loose scale, paint, oil or other foreign material. Bars shall be tied at all intersections except where spacing is less than 30cm (1 foot) in each direction, in which case alternate intersections shall be tied.

Distances from the forms shall be maintained by means of stays, blocks, ties, hangers or other approved supports. Blocks for holding reinforcement from contact with the forms shall be precast mortar blocks of approved shape and dimensions or approved metal chairs. Metal chairs which are in contact with the exterior surface of the concrete shall be galvanized. Layers of bars shall be separated by precast mortar blocks or by other equally suitable devices. The use of pebbles, pieces of broken stone or brick, metal pipe and wooden blocks will not be

permitted. The minimum spacing of bars shall be as specified in Article 1.5.6 (A) in the Design Specifications. Reinforcement in any member shall be placed and then inspected and approved by the Engineer before the placing of concrete begins. Concrete placed in violation of this provision may be rejected and removal required.

If fabric reinforcement is shipped in rolls, it shall be straightened into flat sheets before being placed.

Bundled bars shall be tied together at not more than 2 meters (6.4 feet) centers.

505.06 SPLICING

All reinforcement shall be furnished in the full lengths indicated on the Plans. Splicing of bars, except where shown on the Plans, will not be permitted without the written approval of the Engineer. Splices shall be staggered as far as possible.

Unless otherwise shown on the Plans, bars shall be spliced in accordance with Article 1.5.6 (C) in the Design Specifications.

In lapped splices, the bars shall be placed in contact and wired together in such a manner as to maintain a clearance of not less than the minimum clear distance to other bars and the minimum distance to the surface of the concrete specified in Article 1.5.6 (B) in the Design Specifications.

505.07 LAPPING

Sheets of mesh or bar-mat reinforcement shall overlap each other sufficiently to maintain a uniform strength and shall be securely fastened at the ends and edges. The edge lap shall not be less than one mesh in width.

505.08 SUBSTITUTIONS

Substitution of different size bars will be permitted only

with specific authorization by the Engineer. The substituted bars shall have an area equivalent to the design area, or larger.

505.09 METHOD OF MEASUREMENT

Steel reinforcement incorporated in the concrete masonry will be measured in kilograms based on the total computed weight for the sizes and lengths of bars, mesh or mats shown on the Plans or authorized.

The weight of mesh will be computed from the theoretical weight of plain wire. If the weight per square meter is given on the Plans, that weight will be used.

The weights of plain bars or bar mat or of deformed bars which do not comply with AASHO M 31 (ASTM A 615) will be computed from the theoretical weight of plain round or square bars of the same nominal size as shown in the following tables :

SIZE		Millimeters	6.4	9.5	12.7	15.9	19.1	22.2	25.4	28.6	31.8	38.1
		Inches	1/4	3/8	1/2	5/8	3/4	7/8	1	1 1/8	1 1/4	1 1/2
WEIGHT	Kilogram Per Meter	Round	0.25	0.56	0.99	1.55	2.20	3.04	3.97			
		Square			1.26				5.05	6.40	7.91	11.38
	Pounds Per Foot	Round	0.17	0.38	0.67	1.04	1.50	2.04	2.67			
		Square			0.85				3.40	4.30	5.31	7.65

The weight of bars which comply with AASHO M 31 (ASTM A 615) will be calculated as follows :

DESIGNATION	BAR NO.	3	4	5	6	7	8	9*	10*	11*
WEIGHT	Kilogram Per Meter	0.56	0.99	1.55	2.24	3.04	3.97	5.06	6.40	7.91
	Pounds Per Foot	0.38	0.67	1.04	1.50	2.04	2.67	3.40	4.30	5.31

* Bars of designation Nos. 9, 10, and 11 correspond to the former 1 in. square, 1 1/8 in. square, and $1\frac{1}{4}$ in. square sizes, and are equivalent to those former standard bar sizes in weight and nominal cross-sectional areas.

The weight of reinforcement used in railings shall not be included when railings are paid for on a linear-meter basis. The weight of reinforcement in precast piles and other items where the reinforcement is included in the contract price for the item shall not be included.

No allowance will be made for clips, wire separators, wire chairs and other material used in fastening the reinforcement in place. If bars are substituted upon the Contractor's request and, as a result, more steel is used than specified, only the amount specified shall be included.

When laps are made for splices, other than those shown on the Plans, for the convenience of the Contractor, the extra steel shall not be measured unless the additional steel is approved for payment by the HA.

505.10 BASIS OF PAYMENT

Payment for reinforcement as determined under measurement shall be made at the contract price per kilogram. Payment shall include the cost of furnishing, fabricating and placing of the reinforcement.

SECTION 506 ASHLAR MASONRY

506.01 DESCRIPTION

Ashlar masonry shall consist of first-class, cut stone masonry laid in regular courses, and shall include all work in which, as distinguished from rubble masonry, the individual stones are dressed or tooled to exact dimensions.

506.02 MATERIALS

(1) ASHLAR STONE

Stone for ashlar masonry shall be of the kind specified on the Plans or in the contract. The stone shall be tough, dense, sound and durable, resistant to weathering action, reasonably fine-grained, uniform in color, and free from seams, cracks, pyrite inclusions or other structural defects. Preferably, stone shall be from a quarry, the product of which is known to be of satisfactory quality. Stone shall be of such character that it can be cut to such lines and surfaces, whether curved or plane, as may be required. Any stone having defects which have been repaired with cement or other materials shall be rejected.

Each bidder shall submit with his bid a 15cm-(6 inches) cubical block of the stone he proposes to furnish, and shall designate the quarry from which it is obtained. The quality of the stone furnished shall be at least equal to that of the sample. The sample shall be squared and dressed on three sides; one side shall be smooth-finished, one side fine-finished, and one side shall be given the finish indicated on the Plans for exposed surfaces of face stone. The remaining sides shall be left with quarry face.

When permitted by the Engineer, bidders may submit bids, accompanied by samples as specified above, on kinds of stone other than that specified.

The stone shall be kept free from dirt, oil or any other injurious material which may prevent the proper adhesion of the mortar or detract from the appearance of the exposed surfaces.

(2) MORTAR

Mortar for laying the stone and pointing shall be composed of one part of Portland cement and three parts of sand, unless otherwise provided. The sand shall conform to the requirements of Section 504.02 (3).

506.03 SIZE OF STONE

The individual stones shall be large and well proportioned. They shall not be less than 30cm (12 inches) nor more than 75cm (30 inches) in thickness. The thicknesses of course, if varied, shall diminish regularly from bottom to top of wall. The size of ring stones in arches shall be as shown on the Plans.

506.04 SURFACE FINISHES OF STONE

For the purpose of this Specification the surface finishes of stone are defined as follows :

Smooth-finished : Having a surface in which the variations from the pitch line do not exceed 2mm (1/16 inch).

Fine-finished : Having a surface in which the variations from the pitch line do not exceed 6mm (1/4 inch).

Rough-finished : Having a surface in which the variations from the pitch line do not exceed 13mm ($\frac{1}{2}$ inch).

Scabbled : Having a surface in which the variations from the pitch line do not exceed 19mm (3/4 inch).

Rock-faced : Having an irregular projecting face without indications of tool marks. The projections beyond the pitch line

shall not exceed 80mm (3 inches), and no part of the face shall recede back of the pitch line.

506.05 DRESSING STONE

Stones shall be dressed to exact sizes and shapes before being laid, and shall be cut to lie on their natural beds with top and bottom truly parallel. Hollow beds will not be permitted. The bottom bed shall be full size of the stone and no stone shall have an overhanging top. In rock-face construction, the face side of any stone shall not present an undercut contour adjacent to its bottom arris, giving a top-heavy, unstable appearance when laid.

Beds of face stone shall be fine-finished for a depth of not less than 30cm (12 inches).

Vertical joints of face stone shall be fine-finished and full to the square for a depth of not less than 25cm (10 inches).

Exposed surfaces of the face stone shall be given the surface finish indicatedon the Plans, with edges pitched to true lines and exact batter. Chisel drafts 40mm ($1\frac{1}{2}$ inches) wide shall be cut at all exterior corners. Face stone forming the starling or nosing of piers shall be rough-finished, unless otherwise specified.

Holes for stone hooks shall not be permitted to show in exposed surfaces.

506.06 STRETCHERS

Stretchers shall have a width of bed of not less than $1\frac{1}{2}$ times their thickness. They shall have a length of bed not less than twice nor more than $3\frac{1}{2}$ times their thickness, and not less than 90cm (36 in).

506.07 HEADERS

Headers shall be placed in each course and shall have a width of not less than $1\frac{1}{2}$ times their thickness. In walls having a thickness of 1.2m (4 ft) or less, the headers shall extend entirely through the wall. In walls of greater thickness, the length of headers shall be not less than $2\frac{1}{2}$ times their thickness when the course is 45cm (18 in) or less in height, and not less than 1.2m (4 ft) in courses of greater height. Headers shall bond with the core or backing not less than 30cm (12 in). Headers shall hold in the heart of the wall the same size shown in the face and shall be spaced not further apart than 2.5m (8 ft) center to center. There shall be at least one header to every two stretchers.

506.08 CORES AND BACKING

Cores and backing shall consist either of roughly bedded and jointed headers and stretchers, as specified above, or of Class B or C concrete, as may be specified.

When stone is used for cores or backing, at least $\frac{1}{2}$ of the stone shall be of the same size and character as the face stone, and with parallel ends. No course shall be less than 20cm (8 in) thick.

Concrete used for cores and backing shall conform to the requirements specified in Section 502.04.

The headers and stretchers in walls having a thickness of 0.9m (3 ft) or less shall have a width or length equal to the full thickness of the wall. No backing will be allowed.

506.09 MIXING MORTAR

The mortar shall be hand- or machine-mixed, as may be required by the Engineer. In the preparation of hand-mixed mortar, the sand and cement shall be thoroughly mixed together

in a clean, tight mortar box until the mixture is of uniform color, after which clean water shall be added in such quantity as to form a stiff plastic mass. Machine-mixed mortar shall be prepared in an approved mixer and shall be mixed not less than $1\frac{1}{2}$ minutes. Mortar shall be used within 45 minutes after mixing. Retempering of mortar will not be permitted.

506.10 LAYING STONE

(1) FACE STONE

Stone shall not be dropped upon, or slid over the wall; nor will hammering, rolling or turning of stones on the wall be allowed. They shall be carefully set without jarring the stone already laid, and they shall be handled with a lewis or other appliance which will not cause disfigurement.

Each stone shall be cleaned and thoroughly saturated with water before being set, and the bed which is to receive it shall be cleaned and well-moistened. All stones shall be well-bedded in freshly made mortar and settled in place with a suitable wooden maul before the setting of the mortar. Whenever possible, the face joints shall be properly pointed before the mortar sets. Joints which cannot be so pointed shall be prepared for pointing by raking them out to a depth of 2 inches before the mortar has set. The face surfaces of stones shall not be smeared with the mortar forced out of the joints or that used in pointing. No pinning up of stones with spalls will be permitted and no spalls will be permitted in beds.

Joints and beds shall be not less than 10mm (3/8 inch) nor more than 13mm (1/2 inch) in thickness, and the thickness of the joint or bed shall be uniform throughout.

The stones in any one course shall be placed so as to form

bonds of not less than 30cm (12 in.) with the stones of adjoining courses. Headers shall be placed over stretchers and, in general, the headers of each course shall equally divide the spaces between the headers of adjoining courses; but no header shall be placed over a joint and no joint shall be made over a header.

(2) STONE BACKING AND CORES

Stone backing shall be laid in the same manner as specified above for face stone, with headers interlocking with face headers when the thickness of the wall will permit. Backing shall be laid to break joints with the face stone. Stone cores shall be laid in full mortar beds so as to bond not less than 30cm (12 inches) with face and backing stone and with each other. Bed joints in cores and backing shall not exceed 25mm (1 inch), and vertical joints shall not exceed 10cm (4 in.) in thickness.

(3) CONCRETE CORES AND BACKING

The operations involved in the handling and placing of concrete used in cores and backing shall conform to the requirements specified in Section 504. However, the puddling and compacting of concrete adjacent to the ashlar masonry facing shall be done in a manner that will insure the filling of all spaces around the stones and secure full contact and efficient bond with all stone surfaces.

506.11 LEVELING COURSES

Stone cores and backing shall be carried up to the approximate level of the face course before the succeeding course is started.

The construction joints produced in concrete cores or backing by the intermittent placing of concrete shall be located,

in general, not less than 15cm (6 in) below the top bed of any course of masonry.

506.12 RESETTING

In case any stone is moved or the joint broken, the stone shall be taken up, the mortar thoroughly cleaned from bed and joints, and the stone reset in fresh mortar.

506.13 DOWELS AND CRAMPS

Where required, coping stone, stone in the wings of abutments and stone in piers shall be secured with wrought-iron cramps or dowels as indicated on the Plans.

Dowel holes shall be drilled through each stone before the stone is placed and, after it is in place, such dowel holes shall be extended by drilling into the underlying course not less than 15cm (6 in).

Cramps shall be of the shapes and dimensions shown on the Plans or approved by the Engineer. They shall be inset in the stone so as to be flush with the surfaces.

Cramps and dowels shall be set in lead, care being taken to completely fill the surrounding spaces with the molten metal.

506.14 COPINGS

Stones for copings of wall, pier and abutment-bridge seats shall be carefully selected and fully-dimensioned stones. On piers, not more than two stones shall be used to make up the entire width of coping. The copings of abutment-bridge seats shall be of sufficient width to extend at least 10cm (4 in) under the backwall. Each step forming the coping of a wing-wall shall be formed by a single stone which shall overlap the stone forming the step immediately below it at least 30cm (12 in).

Tops of copings shall be given a bevel cut at least 5cm (2 in) wide, and beds, bevel cuts and tops shall be fine-finished. The vertical joints shall be smooth-finished and the copings shall be laid with joints not more than 0.6cm ($\frac{1}{4}$ in) in thickness. The undersides of projecting copings, preferably, shall have a drip bead.

Joints in copings shall be located so as to provide not less than a 30cm (12 in) bond with the stones of the undercourse, and so that no joint will come directly under the superstructure masonry plates.

506.15 ARCHES

The number of courses and the depth of voussoirs shall be as shown on the Plans. Voussoirs shall be placed in the order indicated, shall be full size throughout, dressed true to template and shall have bond not less than the thickness of the stone. Beds and joints shall be fine-finished, and mortar joints shall not exceed 2cm (3/4 in) in thickness. Exposed surfaces of the intrados and arch ring shall be given the surface finish indicated on the Plans.

Backing may consist of Class B concrete or of large stones shaped to fit the arch, bonded to the spandrels and laid in full beds of mortar. The extrados and interior faces of the spandrel walls shall be given a finishing coat of 1 : $2\frac{1}{2}$ cement mortar which shall be trowelled smooth to receive the waterproofing.

Arch centering, waterproofing, drainage and filling shall be as specified for concrete arches.

506.16 POINTING

Joints not pointed at the time the stone is laid shall be thoroughly wet with clean water and filled with mortar. The mortar

shall be well driven into the joints and finished with an approved pointing tool. The wall shall be kept wet while pointing is being done, and in hot or dry weather the pointed masonry shall be protected from the sun and kept wet for a period of at least three days after completion.

After the pointing is completed and the mortar set, the wall shall be thoroughly cleaned and left in a neat and workmanlike condition.

506.17 METHOD OF MEASUREMENT

The quantity of stone masonry to be measured for payment under this item shall be the number of cubic meters measured in the completed work, and the limiting dimensions shall not exceed those shown on the Plans or fixed by the Engineer.

506.18 BASIS OF PAYMENT

The cubic meters of stone masonry, determined as provided above, will be paid for at the contract unit-price per cubic meter. The contract price shall include all labor, tools, materials and other items incidental to the satisfactory completion of the work. Concrete filling material for the interior of the structural unit will be paid for as indicated on the Plans or Special Provisions.

SECTION 507 MORTAR RUBBLE MASONRY

507.01 DESCRIPTION

Mortar rubble masonry, as here specified, shall include the classes commonly known as coursed, random and random range work, and shall consist of roughly squared and dressed stone laid in cement mortar.

507.02 MATERIALS

(1) RUBBLE STONE

Stone shall be of approved quality, sound and durable, and free from segregations, seams, cracks and other structural defects or imperfections tending to destroy its resistance to the weather. It shall be free from rounded, worn or weathered surfaces. Weathered stone shall be rejected. The stone shall be kept free from dirt, oil or any other injurious material which may prevent the proper adhesion of the mortar.

(2) MORTAR

The mortar used shall conform, as regards materials, proportions and mixing, to the mortar specified in Section 504.02 (2).

507.03 SIZE

Individual stones shall have a thickness of not less than 20cm (8 inches) and a width of not less than $1\frac{1}{2}$ times the thickness. No stones, except headers, shall have a length less than $1\frac{1}{2}$ times their width. Stones shall decrease in thickness from bottom to top of wall.

507.04 HEADERS

Headers shall hold in the heart of the wall the same size shown in the face, and shall extend not less than 30cm (12 in.) into the core or backing. They shall occupy not less than 1/5 of the face area of the wall and shall be evenly distributed. Headers in walls 0.6m (2 ft) or less in thickness shall extend entirely through the wall.

507.05 SHAPING STONE

The stones shall be roughly squared on joints, beds and faces. Selected stone, roughly squared and pitched to line, shall be used at all angles and ends of walls. If specified, all corners or angles in exterior surfaces shall be finished with a chisel draft.

All shaping or dressing of stone shall be done before the stone is laid in the wall, and no dressing or hammering which will loosen the stone will be permitted after it is placed.

507.06 LAYING STONE

The masonry shall be laid to line and in courses roughly leveled up. The bottom or foundation courses shall be composed of large, selected stones and all courses shall be laid with bearing beds parallel to the natural bed of the material.

Stone shall be cleaned and thoroughly saturated with water before being set, and the bed which is to receive it shall be clean and moist. All stone shall be bedded in freshly made mortar. The mortar joints shall be full and the stones carefully settled in place before the mortar has set. No spalls will be permitted in the beds. Joints and beds shall have an average thickness of not more than 2.5cm (1 inch).

Whenever possible, the face joints shall be properly pointed before the mortar becomes set. Joints which cannot be so pointed shall be prepared for pointing by raking them out to a depth of 5cm (2 inches) before the mortar has set. The face surfaces of stones shall not be smeared with the mortar forced out of the joints or that used in pointing.

The vertical joints in each course shall break with those in adjoining courses at least 15cm (6 inches). In no case shall a vertical joint be so located as to occur directly above or below a header.

In case any stone is moved or the joint broken, the stone shall be taken up, the mortar thoroughly cleaned from bed and joints, and the stone reset in fresh mortar.

507.07 COPINGS, BRIDGE SEATS, AND BACKWALLS

Copings, bridge seats and backwalls shall be of the materials shownon the Plans, and when not otherwise specified shall be of Class A concrete which shall conform to the requirements of Section 504.

Concrete copings shall be made in sections extending the full width of the wall, not less than 30cm (12 inches) in thickness, and from 1.5 to 3 meters (5 to 10 feet) long.

507.08 VACANT

507.09 POINTING

Joints not pointed at the time the stone is laid shall be thoroughly wet with clean water and filled with mortar. The mortar shall be well driven into the joints and finished with an approved pointing tool. The wall shall be kept wet while pointing is being done, and in hot or dry weather the pointed masonry

shall be protected from the sun and kept wet for a period of at least three days after completion.

After the pointing is completed and the mortar set, the wall shall be thoroughly cleaned and left in a neat and workmanlike condition.

507.10 METHOD OF MEASUREMENT

The quantity of stone masonry to be measured for payment under this item shall be the number of cubic meters measured in the completed work, and the limiting dimensions shall not exceed those shown on the Plans or fixed by the Engineer.

507.11 BASIS OF PAYMENT

The cubic meters of stone masonry, determined as provided above, will be paid for at the contract unit-price per cubic meter. The contract price shall include all labor, tools, materials and other items incidental to the satisfactory completion of the work.

Concrete used in connection with rubble masonry will be paid for, as in the case of other concrete construction.

SECTION 508 DRY RUBBLE MASONRY

508.01 DESCRIPTION

Dry rubble masonry as here specified shall include the classes commonly known as coursed, random and random range work, and shall consist of roughly squared and dressed stone laid without mortar.

508.02 MATERIALS

Stone shall be of approved quality, sound and durable, and free from segregations, seams, cracks and other structural defects or imperfections tending to destroy its resistance to the weather. It shall be free from rounded, worn or weathered surfaces. All weathered stone shall be rejected.

508.03 SIZE OF STONE

The stones shall conform in size to the requirements specified in Section 507.

508.04 HEADERS

Headers shall conform to the requirements specified in Section 507.

508.05 SHAPING STONE

The stone shall be roughly squared on joints, beds and faces. Selected stone, roughly squared and pitched to line, shall be used at all angles and ends of walls.

508.06 LAYING STONE

The masonry shall be laid to line and in courses roughly leveled up. The bottom or foundation courses shall be composed of large, selected stones, and all courses shall be laid with

bearing beds parallel to the natural bed of the material. Face joints shall not exceed 25mm (1 inch) in width.

In laying dry rubble masonry, care shall be taken that each stone takes a firm bearing at not less than three separate points upon the underlying course. Open joints, both front and rear, shall be "chinked" with spalls fitted to take firm bearing upon their top and bottom surfaces, for the purpose of securing firm bearing throughout the length of the stone.

When required by the terms of the contract, the open joints on the rear surfaces of abutments or retaining walls shall be "slushed" thoroughly with mortar to prevent seepage of water through the joints.

508.07 COPINGS, BRIDGE SEATS AND BACKWALLS

Copings, bridge seats and backwalls, when used in connection with dry rubble masonry, shall conform to the requirements specified in Section 507.

508.08 METHOD OF MEASUREMENT

The quantity of stone masonry to be measured for payment under this item shall be the number of cubic meters measured in the completed work, and the limiting dimensions shall not exceed those shown on the Plans or fixed by the Engineer.

508.09 BASIS OF PAYMENT

The cubic meters of stone masonry, determined as provided above, will be paid for at the contract unit-price per cubic meter. The contract price shall include all labor, tools, materials and other items incidental to the satisfactory completion of the work.

SECTION 509 BRICK MASONRY

509.01 DESCRIPTION

Brick masonry shall consist of brick laid in cement mortar and shall include such construction with building brick as may be specified. Brick pavements are not included under this designation.

509.02 MATERIALS

(1) BRICK

The brick shall have a fine-grained, uniform and dense structure, free from lumps of lime, laminations, cracks, checks, soluble salts or other defects which may in any way impair their strength, durability, appearance or usefulness for the purpose intended. Bricks shall emit a clear, metallic ring when struck with a hammer.

(2) MORTAR

The mortar used shall be composed of one part Portland cement and three parts sand. Sand shall conform to requirements of Section 504.02 (3).

509.03 CONSTRUCTION

The brick shall be laid in such manner as will thoroughly bond them into the mortar by means of the "shove-joint" method; "buttered" or plastered joints will not be permitted. All brick must be thoroughly saturated with water before being laid. The arrangement of headers and stretchers shall be such as will thoroughly bond the mass, and, unless otherwise specified, brick work shall be of alternate headers and stretchers with consecutive courses breaking joints. Other types of bonding, as for ornamental work, shall be as specified on the Plans.

All joints shall be completely filled with mortar. They shall be not less than 6mm ($\frac{1}{4}$ inch) and not more than 12mm ($\frac{1}{2}$ inch) in

thickness, and the thickness shall be uniform throughout. All joints shall be finished properly as the work progresses, and on exposed faces they shall be neatly struck, using the "weather" joint.

509.04 COPINGS, BRIDGE SEATS AND BACKWALLS

The tops of retaining walls, abutment wing-walls and similarly exposed brick work shall be provided, in general, with either a stone or concrete coping. The underside of the coping shall have a batter or drip bead at least 2.5cm (1 inch) beyond the face of the brick work wall. The coping upon an abutment backwall will commonly have no projection beyond its bridge seat face. When concrete is used, it shall be of Class A quality. For thin copings, mortar of the same proportions as used for laying the brick may be used to produce precast sections not less than 1 meter (3 feet) nor more than 1.5 meter (5 feet) in length. No coping shall be less than 10cm (4 inches) thick.

Copings of piers and abutment-bridge seats shall be of Ashlar stonework or of Class A concrete, and shall conform to the requirements for "Concrete Masonry" or as the Plan may indicate. When not shown upon the Plans, concrete shall be used.

509.05 METHOD OF MEASUREMENT

The quantity of brick work to be measured for payment under this section shall be the number of cubic meters of brick masonry actually placed in the structure in accordance with the Plans or as modified by the Engineer.

509.06 BASIS OF PAYMENT

The cubic meters of brick masonry, determined as provided above, will be paid for at the contract unit price per cubic meter. The contract price shall include all labor, tools, materials and other items incidental to the satisfactory completion of the work. Filling material for the interior of the wall, when not of brick, will be paid for as indicated on the Plans or Special Provisions.

SECTION 510 STEEL STRUCTURES FABRICATION

510.01 TYPE OF FABRICATION

These Specifications apply to riveted, bolted and welded construction.

510.02 QUALITY OF WORKMANSHIP

Workmanship and finish shall be equal to the best general practice in modern bridge shops.

510.03 MATERIALS

(1) STRUCTURAL STEEL

(a) GENERAL

Steel shall be furnished according to the following Specifications. Unless otherwise specified, structural carbon steel and structural rivet steel shall be furnished.

(b) STRUCTURAL STEEL

(1) CARBON STEEL

Unless otherwise specified, structural carbon steel for riveted, bolted or welded construction shall conform to: Structural Steel, AASHO M183 (ASTM A36).

(2) EYEBARS

Steel for eyebars shall be of a weldable grade. These grades include structural steel conforming to:

Structural Steel, AASHO M 183 (ASTM A 36).

High Strength Low-Alloy Structural Steel, of a weldable quality, AASHO M 161 (ASTM A 242).

High Strength Low-Alloy Structural Manganese Vanadium Steel, AASHO M 188 (ASTM A 441).

High Strength Low-Alloy Structural Steel with 35 kg/sq mm (50,000 psi) Minimum Yield Point to 10.16cm (4 in.) thick, AASHO M 222 (ASTM A 588) with Supplementary Requirement S1 of AASHO M 222 mandatory).

(c) HIGH STRENGTH LOW-ALLOY STRUCTURAL STEEL

High Strength Low-Alloy structural steel shall conform to :

High Strength Low-Alloy Structural Steel, AASHO M 161 (ASTM A 242).

High Strength Structural Steel, AASHO M 187 (ASTM A 440).

High Strength Low-Alloy Structural Manganese Vanadium Steel, AASHO M 188 (ASTM A 441).

High Strength Low-Alloy Columbium-Vanadium Steels of Structural Quality, AASHO M 223 (ASTM A 572).

High Strength Low-Alloy Structural Steel with 35 kg/sq mm (50,000 psi) Minimum Yield Point to 10.16cm (4 in.) Thick, AASHO M 222 (ASTM A 588).

(d) HIGH STRENGTH LOW-ALLOY STRUCTURAL STEEL FOR WELDING

High Strength Low-Alloy structural steel for welding shall conform to :

High Strength Low - Alloy Structural Manganese Vanadium Steel, AASHO M 188 (ASTM A 441)

High Strength Low-Alloy Structural Steel, AASHO M161 (ASTM A 242) of a weldable quality.

High Strength Low-Alloy Columbium-Vanadium Steels of Structural Quality, Grades 42, 45 and 50, AASHO M 223 (ASTM A 572 with Supplementary Requirement S2 of AASHO M 223 mandatory)

High Strength Low-Alloy Structural Steel with 35 kg/ sq mm (50,000 psi) Minimum Yield Point to 10.16cm (4 in.) thick, AASHO M 222 (ASTM A 588 with Supplementary Requirement S 1 of AASHO M 223 mandatory).

(e) HIGH STRENGTH STRUCTURAL STEEL FOR RIVETED OR BOLTED CONSTRUCTION

High strength structural steel for riveted or bolted construction shall conform to :

High Strength Structural Steel, AASHO M 187 (ASTM A 440).

High Strength Low-Alloy Structural Steel, AASHO M 161 (ASTM A 242).

High Strength Low-Alloy Columbium-Vanadium Steels of Structural Quality, AASHO M 223 (ASTM A 572).

High Strength Low-Alloy Structural Steel with 35 kg/sq mm (50,000 psi) Minimum Yield Point to 10.16cm (4 in.) thick, AASHO M 222 (ASTM A 588).

High Strength Low-Alloy Structural Manganese Vanadium Steel, AASHO M 188 (ASTM A 441).

(f) HIGH YIELD-STRENGTH, QUENCHED AND TEMPERED ALLOY STEEL PLATE

High Yield-Strength, quenched and tempered alloy steel plate shall conform to :

High Yield-Strength, Quenched and Tempered Alloy Steel Plate, suitable for welding, ASTM A 514.

High Strength Alloy Steel Plates, Quenched and Tempered for Pressure Vessels, ASTM A 517.

Quenched and tempered alloy steel structural shapes and seamless mechanical tubing, meeting all of the mechanical and chemical requirements of A 514/A 517 steel, except that the specified maximum tensile strength

may be 98 kg/sq mm (140,000 psi) for structural shapes and 102 kg/sq mm (145,000 psi) for seamless mechanical tubing, shall be considered as A 514/A 517 steel.

(g) STRUCTURAL RIVET STEEL

Structural rivet steel shall conform to:

Steel Structural Rivets, AASHO M 228, Grade I (ASTM A 502, grade 1).

(h) HIGH STRENGTH STRUCTURAL RIVET STEEL

High strength structural rivet steel shall conform to: Steel Structural Rivets, AASHO M 228, Grade 2 (ASTM A 502, grade 2).

(i) HIGH STRENGTH BOLTS

Bolts, nuts and circular washers shall conform to:

High Strength Bolts for Structural Steel Joints, including Suitable Nuts and Plain Hardened Washers, AASHO M 164 (ASTM A 325). Bolts manufactured to AASHO M 164 requirements are identified by marking on the top of the head with three radial lines and the symbol A 325, and nuts are marked on one face with three similar circumferential markings, 120 degrees apart, or alternatively, with C, 2, D, 2H or DH. Bolt and nut dimensions shall conform to the dimensions shown in Table 510.03A, and to the requirements for Heavy Hexagon Structural Bolts and for Heavy Semi-Finished Hexagon Nuts given in ANSI Standard B18.2.1 and B18.2.2, except as allowed in the following paragraph.

Subject to the approval of the Engineer, high strength steel lock-pin and collar fasteners may be used as an alternate for high strength bolts or rivets as shown

on the Plans. The shank and head of the high strength, steel lock-pin and collar fasteners shall meet the chemical composition and mechanical property requirements of AASHO M 164 (ASTM A 325). Each fastener shall provide a solid shank body of sufficient diameter to provide tensile and shear strength equivalent to or greater than the bolt or rivet specified, shall have a cold forged head on one end, of type and dimensions as approved by the Engineer, a shank length suitable for material thickness fastened, locking grooves, breakneck groove and pull grooves (all annular grooves) on the opposite end. Each fastener shall provide a steel locking collar of proper size for shank diameter used which, by means of suitable installation tools, is cold swaged into the locking grooves forming a head for the grooved end of the fastener after the pull groove section has been removed. The steel locking collar shall be a standard product of an established manufacturer of lock-pin and collar fasteners, as approved by the Engineer.

Circular washers shall be flat and smooth, and their nominal dimensions shall conform to the dimensions given in Table 510.03B, except that for lock-pin and collar fasteners, flat washers need not be used. Beveled washers for American Standard beams and channels shall be square or rectangular, shall taper in thickness, and shall conform to the dimensions given in Table 510.03B.

Where necessary, washers may be clipped on one side to a point not closer than 7/8 of the bolt diameter from the center of the washer.

TABLE 510.03A

NOMINAL BOLT SIZE		BOLT DIMENSIONS						NUT DIMENSIONS			
		HEAVY HEXAGON STRUCTURAL BOLTS						HEAVY SEMI-FINISHED HEXAGON NUTS			
		WIDTH ACROSS FLATS		HEIGHT		THREAD LENGTH		WIDTH ACROSS FLATS		HEIGHT	
MM	INCH	MM	INCH	MM	INCH	MM	INCH	MM	INCH	MM	INCH
12.7	1/2	22.2	7/8	7.9	5/16	25.4	1	22.2	7/8	12.3	31/64
15.9	5/8	27.0	1 1/16	9.9	25/64	31.8	1 1/4	27.0	1 1/16	15.5	39/64
19.1	3/4	31.8	1 1/4	11.9	15/32	34.9	1 3/8	31.8	1 1/4	18.7	47/64
22.2	7/8	36.5	1 7/16	13.9	35/64	38.1	1 1/2	36.5	1 7/16	21.8	55/64
25.4	1	41.3	1 5/8	15.5	39/64	44.5	1 3/4	41.3	1 5/8	25.0	63/64
28.6	1 1/8	46.0	1 13/16	17.5	11/16	50.8	2	46.0	1 13/16	28.2	1 7/64
31.8	1 1/4	50.8	2	19.8	25/32	50.8	2	50.8	2	31.0	1 7/32
34.9	1 3/8	55.6	2 3/16	21.4	27/32	57.2	2 1/4	55.6	2 3/16	34.1	1 11/32
38.1	1 1/2	60.3	2 3/8	23.8	15/16	57.2	2 1/4	60.3	2 3/8	37.3	1 15/32

TABLE 510.03B

WASHER DIMENSIONS

CIRCULAR WASHERS							SQUARE OR RECTANGULAR BEVELED WASHERS FOR AMERICAN STANDARD BEAMS AND CHANNELS			
BOLT SIZE "D"		NOMINAL OUTSIDE DIAMETER a		NOMINAL DIAMETER OF HOLE	THICKNESS MINIMUM		THICKNESS MAXIMUM		MINIMUM SIDE DIMENSION		MEAN THICKNESS		TAPER
MM	INCH	MM	INCH	MM INCH	MM	INCH	MM	INCH	MM	INCH	MM	INCH	
12.7	1/2	27.0	1 1/16	13.5	17/32	2.5	.097	4.5	177	44.5	1 3/4	7.9	5/16	1:6
15.9	5/8	33.3	1 5/16	16.7	21/32	3.1	.122	4.5	177	44.5	1 3/4	7.9	5/16	1:6
19.1	3/4	37.3	1 15/32	20.6	13/16	3.1	.122	4.5	177	44.5	1 3/4	7.9	5/16	1:6
22.2	7/8	44.5	1 3/4	23.8	15/16	3.5	.136	4.5	177	44.5	1 3/4	7.9	5/16	1:6
25.4	1	50.8	2	27.0	1 1/16	3.5	.136	4.5	177	44.5	1 3/4	7.9	5/16	1:6
28.6	1 1/8	57.2	2 1/4	31.8	1 1/4	3 5	.136	4 5	.177	57.2	2 1/4	7.9	5/16	1:6
31.8	1 1/4	63.5	2 1/2	34.9	1 3/8	3.5	.136	4.5	.177	57.2	2 1/4	7.9	5/16	1:6
34.9	1 3/8	69.9	2 3/4	38.1	1 1/2	3.5	.136	4.5	.177	57.2	2 1/4	7.9	5/16	1:6
38.1	1 1/2	76.2	3	41.3	1 5/8	3.5	.136	4.5	.177	57.2	2 1/4	7.9	5/16	1:6
44.5	1 3/4	85.7	3 3/8	47.6	1 7/8	4.5 [b]	.178	7.1 [b]	.280	—	—	—	—	—
50.8	2	95.3	3 3/4	54.0	2 1/8	4.5	.178	7.1	.280	—	—	—	—	—
50.8 over 2 to 101.6 Incl	4	2 "D"-12.7mm 2 "D"-1/2		mm "D"+3.2 "D"+1/8	6.1 [c]	[g] .240	8.6	[g] .340	—	—	—	—	—

[a] . . . . . MAY BE EXCEEDED BY 6.4 MM (1/4 INCH).
[b] . . . . . 4.8 MM (3/16 INCH) NOMINAL.
[c] . . . . . 6.4 MM (1/4 INCH) NOMINAL.

(j) COPPER BEARING STEELS

When copper bearing steel is specified, the steel shall contain not less than 0.2 per cent of copper.

(k) WELDED STUD SHEAR CONNECTORS

(1) Shear connector studs shall conform to the requirements of Cold Finished-Carbon Steel Bars and Shafting, AASHO M 169 (ASTM A 108), cold-drawn bars, grades 1015, 1018, or 1020, either semi-or fully-killed. If flux retaining caps are used, the steel for the caps shall be of a low carbon grade suitable for welding and shall comply with Cold-Rolled Carbon Steel Strip, ASTM A 109.

(2) Tensile properties as determined by tests of bar stock after drawing or of finished studs shall conform to the following requirements:

Tensile Strength (min) 42 kg/sq mm (60,000 psi); Yield Strength (min) (as determined by a 0.2% offset method.) 35 kg/sq mm (50,000 psi) Elongation (min) 20% in 5cm (2 inches); reduction of area (min) 50%.

(3) Tensile properties shall be determined in accordance with the applicable sections of ASTM A 370, Mechanical Testing of Steel Products. Tensile tests of finshed studs shall be made on studs welded to test plates using a test fixture similar to that shown in Figure 510.23B. If fracture occurs outside of the middle half of the gage length, the test shall be repeated.

(4) Finished studs shall be of uniform quality and condition, free from injurious laps, fins, seams, cracks, twists, bends or other injurious defects.

Finish shall be as produced by cold drawing, cold rolling or machining.

(5) The manufacturer shall certify that the studs as delivered are in accordance with the material requirements of this Section. Certified copies of in-plant quality control test reports shall be furnished to the Engineer upon request.

(6) The Engineer may select, at the Contractor's expense, studs of each type and size used under the contract, as necessary for checking the requirements of this Section.

(1) UNFILLED TUBULAR STEEL PILES

Unfilled Tubular Steel Piles shall conform to the requirements of Welded and Seamless Steel Pipe Piles, ASTM Designation A 252, Grade 2, with Chemical Requirements meeting ASTM Designation A 53, Grade B.

(2) STEEL FORGINGS AND STEEL SHAFTING

(a) CARBON STEEL FORGINGS

Steel forgings shall conform to the Specifications for Carbon Steel Forgings for General Industrial Use, AASHO M 102 (ASTM 235). Class C I forgings shall be furnished unless otherwise specified.

(b) COLD FINISHED CARBON STEEL SHAFTING

Cold finished carbon steel shafting shall conform to the Specifications for Cold Finished Carbon Steel Bars and Shafting, AASHO M 169 (ASTM A 108). Grade Designation 1016-1030, inclusive, shall be furnished unless otherwise specified.

(c) ALLOY STEEL FORGINGS

Alloy steel forgings shall conform to the Specifications for Alloy Steel Forgings for General Industrial Use, ASTM A 237. Class A forging shall be furnished unless otherwise specified.

(3) STEEL CASTINGS

(a) STEEL CASTINGS FOR HIGHWAY BRIDGES

Steel castings for use in highway bridge components shall conform to Standard Specification for Steel Castings for Highway Bridges, AASHO M 192 (ASTM 486), or Mild-to-Medium-Strength Carbon-Steel Castings for General Applications, AASHO M 103 (ASTM A 27). The Class 70 or Grade 70-36 of steel, respectively, shall be used unless otherwise specified.

(b) CHROMIUM ALLOY-STEEL CASTINGS

Chromium alloy steel castings shall conform to the Specification for Corrosion-Resistant Iron-Chromium and Iron-Chromium-Nickel Alloy Castings for General Application, AASHO M 163 (ASTM A 296). Grade CA 15 shall be furnished unless otherwise specified.

(4) IRON CASTINGS

(a) GENERAL

Iron castings shall be gray iron castings conforming to the Specification for Gray Iron Castings, AASHO M 105, Class No. 30, unless otherwise specified.

(b) WORKMANSHIP AND FINISH

Iron castings shall be true to pattern in form and dimensions, free from pouring faults, sponginess,

cracks, blow holes and other defects in positions affecting their strength and value for the service intended.

Castings shall be boldly filleted at angles and the arrises shall be sharp and perfect.

(c) CLEANING

All castings must be sandblasted or otherwise effectively cleaned of scale and sand so as to present a smooth, clean and uniform surface.

(5) DUCTILE IRON CASTINGS

(a) GENERAL

Ductile iron castings shall conform to the Specifications for Ductile Iron Castings, ASTM A 536, Grade 60-40-18, unless otherwise specified. In addition to the specified test coupons, test specimens from parts integral with the castings, such as risers, shall be tested for castings weighing more than 450 kilograms (1000 pounds), to determine that the required quality is obtained in the castings in the finished condition.

(b) WORKMANSHIP AND FINISH

Iron castings shall be true to pattern in form and dimensions, free from pouring faults, sponginess, cracks, blow holes and other defects, in positions affecting their strength and value for the service intended. Castings shall be boldly filleted at angles and the arrises shall be sharp and perfect.

(c) CLEANING

All castings must be sandblasted or otherwise effectively

cleaned of scale and sand so as to present a smooth, clean and uniform surface.

(6) MALLEABLE CASTINGS

(a) GENERAL

Malleable castings shall conform to the Specification for Malleable Iron Castings, AASHO M 106 (ASTM A 47) ; Grade No. 35018 shall be furnished unless otherwise specified.

(b) WORKMANSHIP AND FINISH

Malleable castings shall be true to pattern in form and dimensions, free from pouring faults, sponginess, cracks, blow holes and other defects in positions affecting their strength and value for the service intended.

The castings shall be boldly filleted at angles and the arrises shall be sharp and perfect. The surfaces shall have a workmanlike finish.

(c) CLEANING

All castings must be sandblasted or otherwise effectively cleaned of scale and sand so as to present a smooth, clean and uniform surface.

(7) BRONZE CASTINGS AND COPPER-ALLOY PLATES

(a) BRONZE CASTINGS

Bronze castings shall conform to Standard Specifications for Bronze Castings for Bridges and Turntables, AASHO M 107 (ASTM B 22), Alloys A or B.

(b) COPPER-ALLOY PLATES

Copper-alloy plates shall conform to Standard

Specifications for Rolled Copper-Alloy Bearing and Expansion Plates and Sheets for Bridge and other Structural Uses, AASHO M 108 (ASTM B 100).

(8) SHEET LEAD

Sheet lead shall conform to the requirements for Common Desilverized Lead of the Specification for Pig Lead, AASHO M 112 (ASTM B 29).

(9) SHEET ZINC

Sheet zinc shall conform to the requirements for Type II of the Specifications for Rolled Zinc, AASHO M 113 (ASTM B 69).

(10) GALVANIZING

When galvanizing is shown on the Plans or specified in the Special Provisions, ferrous metal products shall be galvanized in accordance with the Specifications for Zinc (Hot-Galvanized) Coatings on Products Fabricated from Rolled, Pressed and Forged Steel Shapes, Plates, Bars and Strip, AASHO M 111 (ASTM A 123).

(11) CANVAS AND RED LEAD FOR BEDDING MASONRY PLATES AND EQUIVALENT BEARING AREAS

The canvas shall conform to the Standard Specifications for Numbered Cotton Duck and Army Duck, AASHO M 166 (ASTM D 230), and to the weight specified. The red lead paint shall conform to theSpecifications forpaint for metals, Article 514.02

(12) PREFORMED FABRIC PADS

The preformed fabric pads shall be composed of multiple layers of 270 gms/m^2 (8-ounce) cotton duck impregnated and bound with high-quality natural rubber, or of equivalent

and equally suitable materials compressed into resilient pads of uniform thickness. The number of plies shall be such as to produce the specified thickness, after compression and vulcanizing. The finished pads shall withstand compression loads perpendicular to the plane of the laminations of not less than 700 kilograms per sq cm (10,000 pounds per square inch) without detrimental reduction in thickness or extrusion.

510.04 STORAGE OF MATERIALS

(1) GENERAL

Structural material, either plain, or fabricated, shall be stored at the bridge shop above the ground upon platforms, skids or other supports. It shall be kept free from dirt, grease and other foreign matter, and shall be protected as far as practicable from corrosion.

510.05 STRAIGHTENING MATERIAL AND CURVING ROLLED BEAMS AND WELDED GIRDERS

(1) STRAIGHTENING MATERIAL

Rolled material, before being laid off or worked, must be straight. If straightening is necessary, it shall be done by methods that will not injure the metal. Heat straightening of ASTM A514/A517 steel shall be done only under rigidly controlled procedures, each application subject to the approval of the Engineer. In no case shall the maximum temperature of the steel exceed 610°C(1125 F). Sharp kinks and bends shall be cause for rejection of the material.

(2) CURVING ROLLED BEAMS AND WELDED GIRDERS

(a) MATERIALS

Steels that are manufactured to a yield point greater

than 35 kg/sq mm (50,000 psi) shall not be heat curved.

(b) TYPE OF HEATING

Beams and girders may be curved by either continuous or V-type heating as approved by the Engineer. For the continuous method, a strip along the edge of the top and bottom flange shall be heated simultaneously; the strip shall be of sufficient width and temperature to obtain the required curvature. For the V-type heating, the top and bottom flanges shall be heated in truncated triangular or wedge-shaped areas having their base along the flange edge and spaced at regular intervals along each flange; the spacing and temperature shall be as required to obtain the required curvature, and heating shall progress along the top and bottom flange at approximately the same rate.

For the V-type heating, the apex of the truncated triangular area applied to the inside flange surface shall terminate just before the juncture of the web and the flange is reached.* When the radius of curvature is 300 meters (1,000 feet) or more, the apex of the truncated triangular heating pattern applied to the outside flange surface shall extend to the juncture of the flange and web. When the radius of curvature is less than 300 meters (1,000 feet), the apex of the truncated triangular heating pattern applied to the outside flange surface shall extend past the web for a distance equal to 1/8 of the flange or 7.6cm (3 inches),

* To avoid unnecessary web distortion, special care shall be taken when heating the inside flange surfaces(the surfaces that intersect the web) so that heat is not applied directly to the web.

whichever is less. The truncated triangular pattern shall have an included angle of approximately 15 to 30 degrees, but the base of the triangle shall not exceed 25cm (10 inches). Variations in the patterns prescribed above may be made with the approval of the Engineer.

For both types of heating, the flange edges to be heated are those that will be on the inside of the horizontal curve after cooling. Heating both inside and outside flange surfaces is only mandatory when the flange thickness is 32mm ($1\frac{1}{4}$ inches) or greater, in which case the two surfaces shall be heated concurrently. The maximum temperature shall be as prescribed below.

(c) TEMPERATURE

The heat-curving operation shall be conducted in such a manner that the temperature of the steel does not exceed 620° C (1150F), as measured by temperature indicating crayons or other suitable means. The girder shall not be artificially cooled until after naturally cooling to 315° C (600 F); the method of artificial cooling is subject to the approval of the Engineer.

(d) POSITION FOR HEATING

The girder may be heat-curved with the web in either a vertical or a horizontal position. When curved in the vertical position, the girder must be braced or supported in such a manner that the tendency of the girder to deflect laterally during the heat-curving process will not cause the girder to overturn.

When curved in the horizontal position, the girder

must be supported near its ends and at intermediate points, if required to obtain a uniform curvature ; the bending stress in the flanges due to the dead weight of the girder must not exceed the usual allowable design stress. When the girder is positioned horizontally for heating, intermediate safety catch blocks must be maintained at the mid length of the girder within 5cm (2 inches) of the flanges at all times during the heating process to guard against a sudden sag due to plastic flange buckling.

(e) SEQUENCE OF OPERATIONS

The girder shall be heat-curved in the fabrication shop before it is painted. The heat-curving operation may be conducted either before or after all the required welding of transverse intermediate stiffeners is completed. However, unless provisions are made for girder shrinkage, connection plates and bearing stiffeners shall be located and attached after heat-curving. If longitudinal stiffeners are required, they shall be heat-curved or oxygen-cut separately and then welded to the curved girder. When cover plates are to be attached to rolled beams, they may be attached before heat-curving if the total thickness of one flange and cover plate is less than 6.4 cm ($2\frac{1}{2}$ inches) and the radius of curvature is greater than 300 meters (1,000 feet). For other rolled beams with cover plates, the beams must be heat-curved before the cover plates are attached ; cover plates must be either heat-curved or oxygen-cut separately and then welded to the curved beam.

(f) CAMBER

Girders shall be cambered before heat-curving. Camber for rolled beams may be obtained by heat-cambering

methods approved by the Engineer. For plate girders, the web shall be cut to the prescribed camber with suitable allowance for shrinkage due to cutting, welding and heat curving.* However, subject to the approval of the Engineer, moderate deviations from specified camber may be corrected by a carefully supervised application of heat.

(g) MEASUREMENT OF CURVATURE AND CAMBER

Horizontal curvature and vertical camber shall not be measured for final acceptance before all welding and heating operations are completed and the flanges have cooled to a uniform temperature. Horizontal curvature shall be checked with the girder in the vertical position by measuring offsets from a string line or wire attached to both flanges or by using other suitable means. Camber shall be checked by adequate means.

510.06 FINISH

Portions of the work exposed to view shall be finished neatly. Shearing, flame cutting and chipping shall be done carefully and accurately.

510.07 RIVET AND BOLT HOLES

(1) HOLES FOR RIVETS, HIGH STRENGTH BOLTS AND UNFINISHED BOLTS * *

All holes for rivets or bolts shall be either punched or

The heat-curving process may tend to change the vertical camber present before heating. This effect shall be most pronounced when the top and bottom flanges are of unequal widths on a given transverse cross-section.

* See Section 510.19 for bolts included in designation "Unfinished Bolts".

drilled. Material forming parts of a member composed of not more than five thicknesses of metal may be punched 1.6mm (1/16 inch) larger than the nominal diameter of the rivets or bolts whenever the thickness of the material is not greater than 19mm (3/4 inch) for structural steel, 16mm (5/8 inch) for high-strength steel, or 12mm (1/2 inch) for quenched and tempered alloy steel, unless subpunching and reaming are required under Section 510.10.

When there are more than five thicknesses, or when any of the main material is thicker than 20mm (3/4 inch) for structural steel, 16mm (5/8 inch) for high-strength steel, or 12mm (1/2 inch) for quenched and tempered alloy steel, all holes shall either be subdrilled or drilled full-size.

When required under Section 510.10, all holes shall be either subpunched or subdrilled (subdrilled if thickness limitation governs) 5mm (3/16 inch) smaller and, after assembling, reamed 2mm (1/16 inch) larger or drilled full-size to 2mm (1/16 inch) larger than the nominal diameter of the rivets or bolts.

When permitted by Article 1.7.5 in the Design Specifications, enlarged or slotted holes are allowed with high strength bolts.

(2) HOLES FOR RIBBED BOLTS, TURNED BOLTS OR OTHER APPROVED BEARING-TYPE BOLTS

All holes for ribbed bolts, turned bolts or other approved bearing-type bolts shall be subpunched or subdrilled 5mm (3/16 inch) smaller than the nominal diameter of the bolt and reamed assembly, or to a steel template or, after assembling, drilled from the solid at the option of the Contractor. In any case, the finished holes shall provide

a driving fit as specified on the Plans or in the Special Provisions.

510.08 PUNCHED HOLES

The diameter of the die shall not exceed the diameter of punch by more than 2mm (1/16 inch). If any holes must be enlarged to admit the rivets or bolts, such holes shall be reamed. Holes must be clean-cut, without torn or ragged edges. Poor matching of holes will be cause for rejection.

510.09 REAMED OR DRILLED HOLES

Reamed or drilled holes shall be cylindrical, perpendicular to the member, and shall comply with the requirements of Section 510.07 as to size. Where practicable, reamers shall be directed by mechanical means. Burrs on the outside surfaces shall be removed. Poor matching of holes will be cause for rejection. Reaming and drilling shall be done with twist drills. If required by the Engineer, assembled parts shall be taken apart for removal of burrs caused by drilling. Connecting parts requiring reamed or drilled holes shall be assembled and securely held while being reamed or drilled, and shall be match-marked before disassembling.

510.10 SUBPUNCHING AND REAMING OF FIELD CONNECTIONS

Unless otherwise specified in the Special Provisions or on the Plans, holes in all field connections and field splices of main members of trusses, arches, continuous beam spans, bents, towers (each face), plate girders and rigid frames shall be subpunched (or subdrilled if subdrilling is required according to Section 510.07) and subsequently reamed while assembled or to a steel template, as required by Section 510.14. All holes for

floor-beam and stringer-field end connections shall be subpunched and reamed to a steel template or reamed while assembled. Reaming or drilling full-size of field connection holes through a steel template shall be done after the template has been located, with utmost care as to position and angle, and firmly bolted in place. Templates used for reaming matching members or the opposite faces of a single member shall be exact duplicates. Templates used for connections on like parts or members shall be so accurately located that the parts or members are duplicates and require no match-marking.

For any connection in lieu of subpunching and reaming or subdrilling and reaming, the fabricator may, at his option, drill holes full-size with all thicknesses of material assembled in proper position.

If additional subpunching and reaming are required, they shal l be specified in the Special Provisions or on the Plans.

510.11 ACCURACY OF PUNCHED AND DRILLED HOLES

All holes punched full-size, subpunched or subdrilled shall be so accurately punched that after assembling (before any reaming is done) a cylindrical pin 3mm (1/8 inch) smaller in diameter than the nominal size of the punched hole may be entered perpendicular to the face of the member, without drifting, in at least 75 percent of the contiguous holes in the same plane. If the requirement is not fulfilled, the badly punched pieces will be rejected. If any hole will not pass a pin 5mm (3/16 inch) smaller in diameter than the nominal size of the punched hole, this will be cause for rejection.

510.12 ACCURACY OF REAMED AND DRILLED HOLES

When holes are reamed or drilled, 85 percent of the holes in any contiguous group shall, after reaming or drilling, show

no offset greater than 1mm (1/32 inch) between adjacent thicknesses of metal.

All steel templates shall have hardened steel bushings in holes accurately dimensioned from the center lines of the connection as inscribed on the template. The centerlines shall be used in locating accurately the template from the milled or scribed ends of the members.

510.13 FITTING FOR RIVETING AND BOLTING

Surfaces of metal in contact shall be cleaned before assembling. The parts of a member shall be assembled, well pinned and firmly drawn together with bolts before reaming or riveting is commenced. Assembled pieces shall be taken apart, if necessary, for the removal of burrs and shavings produced by the reaming operation. The member shall be free from twists, bends and other deformation.

Preparatory to the shop-riveting of full-sized punched material, the rivet holes, if necessary, shall be spear-reamed for the admission of the rivets. The reamed holes shall not be more than 2mm (1/16 inch) larger than the nominal diameter of the rivets.

End-connecting angles, stiffener angles and similar parts shall be carefully adjusted to correct position and bolted, clamped, or otherwise firmly held in place until riveted.

Parts not completely riveted in the shop shall be secured by bolts, in so far as practicable, to prevent damage in shipment and handling.

510.14 SHOP ASSEMBLING

The field connections of main members of trusses, arches, continuous beam spans, bents, towers (each face), plate girders and rigid frames shall be assembled in the shop with milled

ends of compression members in full bearing, and then shall have their subsize holes reamed to specified size while the connections are assembled. Assembly shall be Full Truss or Girder Assembly, unless Progressive Truss or Girder Assembly, Full Chord Assembly, Progressive Chord Assembly or Special Complete Structure Assembly is specified in the Special Provisions or on the Plans.

(1) FULL TRUSS OR GIRDER ASSEMBLY

Full Truss or Girder Assembly shall consist of assembling all members of each truss, arch rib, bent, tower face, continuous beam line, plate girder or rigid frame at one time.

(2) PROGRESSIVE TRUSS OR GIRDER ASSEMBLY

Progressive Truss or Girder Assembly shall consist of assembling initially for each truss, arch rib, bent, tower face, continuous beam line, plate girder or rigid frame at least three contiguous shop sections or all members in at least three contiguous panels, but not less than the number of panels associated with three contiguous chord lengths (i.e., length between field splices); and not less than 45 meters (150 feet) in the case of structures longer than 45 meters (150 feet). At least one shop section or panel or as many panels as are associated with a chord length shall be added at the advancing end of the assembly before any member is removed from the rearward end, so that the assembled portion of the structure is never less than that specified above.

(3) FULL CHORD ASSEMBLY

Full Chord Assembly shall consist of assembling, with geometric angles at the joints, the full length of each chord

of each truss or open spandrel arch, or each leg of each bent or tower, then reaming their field-connection holes while the members are assembled and reaming the web member-connections to steel templates set at geometric (not cambered), angular relation to the chord lines.

Field connection holes in web members shall be reamed to steel templates. At least one end of each web member shall be milled or shall be scribed normal to the longitudinal axis of the member, and the templates at both ends of the member shall be accurately located from one of the milled ends or scribed lines.

(4) PROGRESSIVE CHORD ASSEMBLY

Progressive Chord Assembly shall consist of assembling contiguous chord members in the manner specified for Full Chord Assembly and in the number and length specified for Progressive Truss or Girder Assembly.

(5) SPECIAL COMPLETE STRUCTURE ASSEMBLY

Special Complete Structure Assembly shall consist of assembling the entire structure, including the floor system. (This procedure is ordinarily needed only for complicated structures such as those having curved girders or extreme skew in combination with severe grade or camber.)

Each assembly, including camber, alignment, accuracy of holes and fit of milled joints, shall be approved by the Engineer before reaming is commenced.

A camber diagram shall be furnished the Engineer by the Fabricator showing the camber at each panel point of each truss, arch rib, continuous beam line, plate girder or rigid frame. When the shop assembly is Full Truss or Girder Assembly or Special Complete Structure Assembly, the camber diagram shall show the camber measured in

assembly. When any of the other methods of shop assembly is used, the camber diagram shall show calculated camber.

510.15 DRIFTING OF HOLES

The drifting done during assembling shall be only such as to bring the parts into position, and not sufficient to enlarge the holes or distort the metal. If any holes must be enlarged to admit the rivets, they shall be reamed.

510.16 MATCH-MARKING

Connecting parts assembled in the shop for the purpose of reaming holes in field connections shall be match-marked, and a diagram showing such marks shall be furnished the Engineer

510.17 RIVETS

The size of rivets called for on the Plans shall be the size before heating. Rivet heads shall be of standard shape, unless otherwise specified, and of uniform size for the same diameter of rivet. They shall be full, neatly made, concentric with the rivet holes, and in full contact with the surfaces of the member.

510.18 FIELD RIVETS

Sufficient field rivets shall be furnished to rivet the entire structure with an ample surplus to replace all rivets burned, lost or cut out.

510.19 BOLTS AND BOLTED CONNECTIONS

The Specifications of this Article do not pertain to the use of high strength bolts. Bolted connections fabricated with high strength bolts shall conform to Section 510.20.

(1) GENERAL

Bolts shall be unfinished, turned or ribbed bolts conforming to the requirements for Grade A Bolts of Specification for Low-Carbon Steel Externally and Internally Threaded Standard Fasteners, ASTM A 307. Bolted connections shall be used only as indicated by the Plans or Special Provisions. Bolts shall have single self-locking nuts or double nuts unless otherwise shown on the Plans or in the Special Provisions. Beveled washers shall be used where bearing faces have a slope of more than 1 : 20 with respect to a plane normal to the bolt axis.

Except as otherwise provided in this Article, construction shall conform to applicable Specifications for riveted structures.

(2) UNFINISHED BOLTS

Unfinished bolts shall be furnished unless other types are specified.

(3) TURNED BOLTS

The surface of the body of turned bolts shall meet the ANSI roughness-rating value of 125. Heads and nuts shall be hexagonal, with standard dimensions for bolts of the nominal size specified or the next larger nominal size. Diameter of threads shall be equal to the body of the bolt or the nominal diameter of the bolt specified. Holes for turned bolts shall be carefully reamed with bolts furnished to provide for a light driving fit. Threads shall be entirely outside of the holes. A washer shall be provided under the nut.

(4) RIBBED BOLTS

The body of ribbed bolts shall be of an approved form

with continuous longitudinal ribs. The diameter of the body measured on a circle through the points of the ribs shall be 2mm (5/64 inch) greater than the nominal diameter specified for the bolts.

Ribbed bolts shall be furnished with round heads conforming to ANSI B 18.5, unless otherwise specified. Nuts shall be hexagonal, either recessed or with a washer of suitable thickness. Ribbed bolts shall make a driving fit with the holes. The hardness of the ribs shall be such that the ribs do not mash down enough to permit the bolts to turn in the holes during tightening. If for any reason the bolt twists before drawing tight, the hole shall be carefully reamed and an oversized bolt used as a replacement.

510.20 CONNECTIONS USING HIGH STRENGTH BOLTS

(1) GENERAL

This Article covers the assembly of structural joints using AASHO M 164 (ASTM A 325) high strength carbon steel bolts or equivalent fasteners, tightened to a high tension. The bolts are used in holes conforming to the requirements of Sections 510.07, 510.08 and 510.09.

(2) BOLTS, NUTS AND WASHERS

Bolts, nuts and washers shall conform to the requirements of Section 510.03. (1) i.

(3) BOLTED PARTS

The slope of surfaces of bolted parts in contact with the bolt head and nut shall not exceed 1:20 with respect to a plane normal to the bolt axis. Bolted parts shall fit solidly together when assembled and shall not be separated by gaskets or any other interposed compressible material.

When assembled, all joint surfaces, including those adjacent to the bolt heads, nuts or washers, shall be free of scale, except tight mill scale, and shall also be free of dirt, loose scale, burrs, other foreign material and other defects that would prevent solid seating of the parts.

Contact surfaces within friction-type joints shall be free of oil, paint, lacquer or rust inhibitor, except that hot-dip galvanizing will be permitted, provided that contact surfaces are scored by wire brushing or blasting after galvanizing and prior to assembly. The wire-brushing treatment shall be a light application of manual or power brushing that marks or scores the surface but removes relatively little of the zinc coating. The blasting treatment shall be a light brush-off treatment which will produce a dull gray appearance. However, neither treatment should be severe enough to produce any break or discontinuity in the zinc surface.

When specified on the Plans, galvanized, high strength structural bolts shall be furnished and installed in conformance with ASTM A 325-71A, in which a special lubricant is required for the nuts and additional test requirements are specified for a full-size assembled joint.

(4) INSTALLATION

(a) BOLT TENSION

Each fastener shall be tightened to provide, when all fasteners in the joint are tight, at least the minimum bolt tension shown in Table 510.20A for the size of fastener used.

TABLE 510.20A

BOLT TENSION

BOLT SIZE		MINIMUM BOLT TENSION II AASHO M 164 / ASTM A325 BOLTS	
Millimeter	Inches	Kilograms	Pounds
12.7	1/2	5467	12050
15.9	5/8	8709	19200
19.1	3/4	12882	28400
22.2	7/8	17804	39250
25.4	1	23360	51500
28.6	1 1/8	25606	56450
31.8	1 1/4	32523	71700
34.9	1 3/8	38760	85450
38.1	1 1/2	47174	104000

(I) EQUAL TO THE PROOF LOAD (LENGTH MEASUREMENT METHOD) GIVEN IN AASHO M164 (ASTM A325)

Threaded bolts shall be tightened with properly calibrated wrenches or by the turn-of-nut method. If required because of bolt-entering and wrench-operation clearances, tightening by either procedure may be done by turning the bolt while the nut is prevented from rotating. Impact wrenches, if used, shall be of adequate capacity and sufficiently supplied with air to perform the required tightening of each bolt in approximately ten seconds.

(b) WASHERS

All fasteners shall have a hardened washer under the element (nut or bolt head) turned in tightening. Where an outer face of the bolted parts has a slope of more than 1 : 20 with respect to a plane normal to the bolt axis, a smooth, beveled washer shall be used to compensate for the lack of parallelism.

(c) CALIBRATED WRENCH-TIGHTENING

When calibrated wrenches are used to provide the bolt tension specified in paragraph (4) (a) above, their setting shall be such as to induce a bolt tension 5% to 10% in excess of this value. These wrenches shall be calibrated at least once each working day by tightening, in a device capable of indicating actual bolt tension, not less than three typical bolts of each diameter from the bolts to be installed. Power wrenches shall be adjusted to stall or cut out at the selected tension. If manual torque wrenches are used, the torque indication corresponding to the calibrating tension shall be noted and used in the installation of all bolts of the tested lot. Nuts shall be turned in the tightening direction when torque is measured. When using calibrated wrenches to install several bolts in a single joint, the wrench shall be returned to touch up bolts previously tightened which may have been loosened by the tightening of subsequent bolts, until all are tightened to the prescribed amount.

(d) TURN-OF-NUT TIGHTENING

When the turn-of-nut method is used to provide the bolt tension specified in paragraph (4) (a), there shall first be enough bolts brought to a snug, tight condition

to insure that the parts of the joint are brought into full contact with each other. Snug-tight is defined as the tightness attained by a few impacts of an impact wrench or the full effort of a man using an ordinary spud wrench. Following this initial operation, bolts shall be placed in any remaining holes in the connection and brought to snug-tightness. All bolts in the joint shall then be tightened additionally by the applicable amount of nut rotation specified in Table 510.20B, with tightening progressing systematically from the most rigid part of the joint to its free edges. During this operation there shall be no rotation of the part not turned by the wrench.

TABLE 510.20B

Nut rotation (1) (2) from snug-tight condition

DISPOSITION OF OUTER FACES OF BOLTED PARTS		
Both faces normal to bolt axis or one face normal to axis and other face sloped (3) (bevel washer not used)		Both faces sloped (3) from normal to bolt axis (bevel washers not used)
Bolt length (4) not exceeding 8 diameters or 20.3cm (8")	Bolt length (4) exceeding 8 diameters or 20.3cm (8 In.)	For all lengths of bolts
$^1/_2$ turn	$^2/_3$ turn	$^3/_4$ turn

(1) For coarse thread, heavy hexagon structural bolts of all sizes and lengths, and heavy hexagon semi-finished nuts.

(2) Nut rotation is rotation relative to bolt, regardless of the element (nut or bolt) being turned. Tolerance on rotation: 1/6 turn (60°) over and nothing under.

(3) Slope 1 : 20 maximum.

(4) Bolt length is measured from underside of head to extreme end of bolt.

(e) LOCK-PIN AND COLLAR FASTENERS

The installation of lock-pin and collar fasteners shall be by methods and procedures approved by the Engineer.

(5) INSPECTION

(a) The Engineer shall determine that the requirements of paragraphs (b) and (c) following, are met in the work. When the calibrated wrench-method of tightening is used, the Engineer shall have full opportunity to witness the calibration tests prescribed in paragraph (4) (c), above.

(b) The Engineer shall observe the installation and tightening of bolts to determine that the selected tightening procedure is properly used, and shall determine that all bolts are tightened.

(c) The following inspection shall be used unless a more extensive or different inspection procedure is specified.

(1) Either the Engineer or the Contractor in the presence of the Engineer, at the Engineer's option, shall use an inspection wrench which may be either a torque wrench or a power wrench that can be accurately adjusted in accordance with the requirements of paragraph (4) (c), above.

(2) Three bolts of the same grade, size and condition as those under inspection shall be placed individually in a calibration device capable of indicating bolt tension. There shall be a washer under the part turned in tightening each bolt.

(3) When the inspecting wrench is a torque wrench, each bolt specified in paragraph (5) (c) (2) shall be tightened in the calibration device by any convenient means to the minimum tension specified for its size in paragraph (4) (a). The inspecting wrench then shall be applied to the tightened bolt, and the torque necessary to turn the nut or head 5 degrees (approximately 2.5cm at 30.5cm radius, or 1 inch at 12 inches) in tightening direction shall be determined. The average torque measured in the tests of three bolts shall be taken as the job-inspecting torque to be used in the manner specified in paragraph (5) (c) (5).

(4) When the inspecting wrench is a power wrench, it shall be adjusted so that it will tighten each bolt specified in paragraph (5) (c) (2) to a tension at least 5 but not more than 10 percent greater than the minimum tension specified for its size in paragraph (4) (a). This setting of wrench shall be taken as the job-inspecting torque to be used in the manner specified in paragraph (5) (c) (5).

(5) Bolts, represented by the sample prescribed in paragraph (5) (c) (2), which have been tightened in the structure shall be inspected by applying, in the tightening direction, the inspecting wrench and its job-inspecting torque to 10 percent of the bolts, but not less than two bolts, selected at

random in each connection. If no nut or bolt head is turned by this application of the job-inspecting torque, the connection shall be accepted as properly tightened. If any nut or bolt head is turned by the application of the job-inspecting torque, this torque shall be applied to all bolts in the connection, and all bolts whose nut or head is turned by the job-inspecting torque shall be tightened and reinspected; or alternatively, the Contractor, at his option, may retighten all of the bolts in the connection and then resubmit the connection for the specified inspection.

(d) The procedures for inspecting and testing the lock-pin and collar fasteners, and their installation to assure that the required preload tension is provided, shall be as approved by the Engineer.

510.21 RIVETING

Rivets shall be heated uniformly to a light, cherry-red color, and shall be driven while hot. Any rivet whose point is heated more than the remainder shall not be driven. When a rivet is ready for driving, it shall be free from slag, scale and other adhering matter. Any rivet which, in the opinion of the Engineer, is scaled excessively, will be rejected.

All rivets that are loose, burned, badly formed or otherwise defective shall be removed and replaced with satisfactory rivets. Any rivet whose head is defective in size or whose head is driven off center will be considered defective and shall be removed. Stitch rivets that are loosened by driving of adjacent rivets shall be removed and replaced with satisfactory rivets. Caulking, recupping, or double gunning of rivet heads will not be permitted.

Shop rivets shall be driven by direct-acting rivet machines when practicable.

Approved, beveled rivet sets shall be used for forming rivet heads on sloping surfaces. When the use of a direct-acting rivet machine is not practicable, pneumatic hammers of approved size shall be used. Pneumatic bucking tools will be required when, in the opinion of the Engineer, the size and length of the rivets warrant their use.

Rivets may be driven cold, provided their diameter is not over 10mm (3/8 inch).

510.22 PLATE-CUT EDGES

(1) EDGE PLANING

Sheared edges of plate more than 16mm (5/8 inch) in thickness and carrying calculated stress shall be planed to a depth of 6mm (1/4 inch). Re-entrant corners shall be filleted to a minimum radius of 19mm (3/4 inch) before cutting.

(2) VISUAL INSPECTION AND REPAIR OF PLATE-CUT EDGES

The following provisions shall apply to permissible repairs to discontinuities discovered by visual inspection of the plate-cut edges before fabrication, welding or during routine examination of welded joints by radiography or ultrasonic inspection in plates of all steels covered by these Specifications, in thicknesses up to and including 10.2cm (4 inches) maximum. These principally include discontinuities resulting from gas pockets or blow holes and shrinkage cavities which are manifested as laminations or pipe characterized by a distinct separation of the metal which is parallel to the plane of the plate. To a lesser extent, these include discontinuities resulting from entrapped slag or refractory

or deoxidation products which are manifested as deposits of foreign material in the steel, but only in the case where these deposits are parallel to the plane of the plate. Multiple discontinuities shall be considered continuous when located in the same plane within five percent of the plate thickness and separated by a distance less than the length of the smaller of two adjacent discontinuities.

The corrective procedures described in Table 510.22 (B) shall not apply to discontinuities in rolled plate surfaces, which discontinuities may be corrected by the Fabricator in accordance with the provisions of AASHO M 160 (ASTM A 6). These provisions are not applicable to material stressed in tension in the "through-thickness direction"

The limits of all internal discontinuities required to be explored, which are not explored to their full depth by other means, shall be determined by ultrasonic inspection.

Plates containing discontinuities of the types shown in Figure 510.22B, and as described in the following Table 510.22 (B) may be corrected by measures listed hereunder.

The length of the discontinuity is the visible, long dimension on the plate-cut edge, and the depth is the distance that the discontinuity extends into the plate from the cut edge.

In making any repairs, the amount of metal removed shall be the minimum necessary to remove the discontinuity or to determine that the permissible limit is not exceeded. Plate edges may be at any angle with respect to the rolling direction, but the directions of discontinuities shall be considered with respect to the directions of the plate edges. All repairs of the discontinuities made by welding shall conform to applicable provisions of AWS D1.1-72, as modified by these Specifications.

Edges of plates shall be inspected, and required repairs completed as early as feasible in the fabrication sequence so as to allow maximum opportunity for the Fabricator to incorporate repaired plates in the least critical areas.

TABLE 510.22 (B)

DESCRIPTION OF DISCONTINUITY	REPAIR REQUIRED
Any discontinuity 25mm (1") in length or less.	None-need not be explored.
Any discontinuity over 25mm (1") in length and 3mm (1/8") maximum depth.	None-depth should be explored.
Any discontinuity over 25mm (1") in length, with depth over 3mm (1/8") but not greater than 6mm (1/4").	Remove-need not weld.
Any discontinuity over 25mm (1") in length, with depth over 6mm (1/4") but not greater than 25mm (1").	Completely remove and weld. Aggregate length of welding not over 20% of plate-edge length being repaired.
And discontinuity over 25mm (1") in length, with depth greater than 25mm (1").	Applicable provisions, as found in FOOTNOTES below.

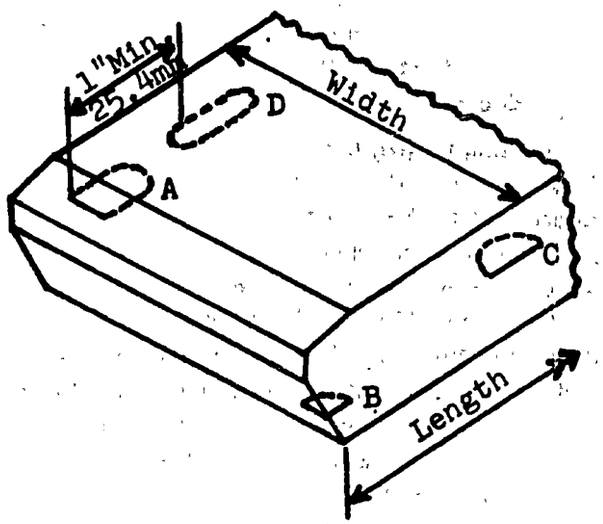

FOOTNOTES FOR FIG. 510.22B

(1) Where such a discontinuity, as (A), (B), or (C), is determined visually prior to completing the joint, the size and shape of the discontinuity shall be determined by ultrasonic inspection. The area of the discontinuity shall be determined as the area of total loss of back reflection when tested in accordance with the procedures of ASTM A 435.

(2) For acceptance of Types (A), (B) and (D) discontinuities, the area of the discontinuity (or the aggregate area of multiple discontinuities) shall not exceed 4% of plate area (length X width), except that if the width of the discontinuity, or the aggregate width of discontinuities on any transverse section as measured perpendicular to the plate length exceeds 20% of the plate width, the 4% plate area shall be reduced by the percentage amount of the width exceeding 20%. (For example : If discontinuity is 30% of plate width, area of discontinuity cannot exceed 3.6% of plate

area). The discontinuity on the cut edge of the plate shall be gouged out to a depth of 25mm (1") beyond its intersection of the surface by chipping, air carbon-arc gouging or grinding, and blocked off by welding with the manual-shielded metal-arc process in layers not to exceed 3mm (1/8") in thickness.

(3) If a discontinuity (D), not exceeding the allowable area in (2), is discovered after the joint has been completed and is determined to be 25mm (1") or more away from the face of the weld as measured on the plate surface, no repair of the discontinuity is required. If the discontinuity (D) is less than 25mm (1") away from the face of the weld, it shall be gouged out to a distance of 25mm (1") from the fusion zone of the weld by chipping, air carbon-arc gouging or grinding, and blocked off by welding with the manual-shielded metal-arc process for at least 4 layers, not to exceed 3mm (1/8") thickness per layer. The submerged arc or other process may be used for the remaining layers.

(4) If the area of the discontinuity (A), (B) or (D) exceeds the allowable in (2), the plate or subcomponent shall be rejected and replaced, or repaired at the discretion of the Engineer.

(5) The aggregate length of weld repair shall not exceed 20% of the length of the plate-cut edge without approval of the Engineer.

(6) All repairs shall be in accordance with Section 510.23. Gouging of the discontinuity may be done from either plate surface or edge.

(7) For discontinuities of Type (C), if the actual net cross-sectional area which would remain after removal of the discontinuity would be 98% or greater of the net area of the plate based on nominal dimensions, it shall be

unnecessary to repair by welding. Such corrections shall be faired to the plate-cut surface with a slope not exceeding 1 in 10.

(8) For discontinuities of Type (C), if the actual net cross-sectional area which would remain after removal of the discontinuity would be less than 98% of the net area of the plate based on nominal dimensions, the area may be repaired by welding with the approval of the Engineer.

(9) For discontinuities of Types (A) and (B), all repair welds in A514/A517 steel shall be made with low hydrogen electrodes not exceeding 4mm (5/32") in diameter. All repair welds in A514/A517 steel will be inspected not less than 48 hours after they are completed, and the butt weld shall not be made until after the repair weld has been approved by the Engineer.

(10) For discontinuities of Type (C), in A514/A517 steel, no welding repairs will be permitted.

510.23 WELDS

(1) GENERAL

Welding of steel structures, when authorized in accordance with the provision of Division I, shall conform to Specifications for Welded Highway and Railway Bridges of the American Welding Society, AWS D1.1-72, when using structural steel of AASHO M 183 (ASTM A 36), high strength low alloy structural steel of AASHO M 161 (ASTM A 242) of a weldable quality, AASHO M 188 (ASTM A 441), AASHO M 223 (ASTM A 572 with Supplementary Requirement S2 of AASHO M 223 mandatory), Grades 42, 45 and 50 and AASHO M 222 (ASTM A 588 with Supplementary Requirement S1 of AASHO M 222 mandatory), unless these Standard

Specifications conflict with the AWS Specifications, in which case these Standard Specifications will govern. Welding procedures shall be qualified in accordance with Art. 9.2.3 of D1.1-72, except as otherwise provided in this Article. Reference to A 514 steel in AWS D1.1-72 shall be applicable to A 517 steel.

Welding procedures for ASTM A 514/A 517 steel shall be submitted for approval and the procedures qualified prior to the start of production welding.

No temporary or permanent welds, if not shown on the Plans or permitted in the Specifications, shall be made without specific written authorization by the Engineer.

(2) FILLER METAL

All electrodes for manual-shielded metal-arc welding shall conform to the low-hydrogen classification requirements of the latest edition of the American Welding Society's Filler Metal Specification AWS A 5.1 or AWS A 5.5, and be capable of producing weld metal having an impact strength of at least 2.8kg-m (20 ft-lbs) (Charpy V Notch) at -18°C (0°F). All bare electrodes and flux used in combination for submerged arc welding, the electrode and gas shielding used in combination for gas metal-arc welding, or the electrode and shielding medium used in combination for flux cored arc welding of steels shall conform to the requirements in the latest edition of the American Welding Society, AWS A 5.17, A 5.18 or A 5.20, capable of producing weld metal having a minimum impact strength of 2.8kg-m (20 ft-lbs) (Charpy V-Notch) at -18°C (0°F), or shall be capable of producing low-alloy weld metal having the mechanical properties listed in paragraphs 4.12 and 4.16 of AWS D1.1-72.

Low-alloy weld properties shall be determined from a multiple pass weld made in accordance with the requirements of the latest edition of the applicable Specification (AWS A 5.17, A 5.18, or A 5.20) or the welding procedure Specification. Each user shall demonstrate that each combination of electrode and flux or electrode and shielding medium will produce weld metal having the above mechanical properties until the applicable AWS Filler Metal Specification is issued; at that time the AWS Filler Metal Specification will control. The test assembly for Grades F 100 and F 110 shall be made using ASTM A 514/A 517 steel. The Engineer may accept evidence of record of a combination that has been satisfactorily tested in lieu of the test required, provided the same welding procedure is used.

Electrodes conforming to AWS A 5.1 shall be purchased in hermetically sealed containers or shall be dried for at least two hours between 232° C and 260° C (450°F/500°F) before they are used. Electrodes conforming to AWS A 5.5 shall be purchased in hermetically sealed containers or shall be dried one hour ± 15 minutes at a temperature of 428° C ± 15° C (800°F ± 25°F) before being used. All electrodes for use in welding A 514/A 517 steel having a strength lower than that of the E 100 classification shall be dried for 1 hour ± 15 minutes at a temperature of 428° C ± 15° C (800°F ± 25°F) before being used. Electrodes shall be dried prior to use if the hermetically sealed container shows evidence of damage. Immediately after removal from hermetically sealed containers or from drying ovens, electrodes shall be stored in ovens held at a temperature of at least 120° C (250°F). E 70 XX electrodes that are

not used within four hours, E 80 XX within two hours, E 90 XX within one hour, and E 100 XX and E 110 X within one-half hour after removal from hermetically sealed containers or removal from a drying or storage oven shall be redried before use. Electrodes which have been wet shall not be used. Electrodes shall be redried no more than one time.

Flux used for submerged arc welding shall be non-hygroscopic, dry and free of contamination from dirt, mill scale or other foreign material. All flux shall be purchased in moistureproof packages capable of being stored under normal conditions for at least six months without such storage affecting its welding characteristics or weld properties. Flux from packages damaged in transit or handling shall be discarded or shall be dried before use at a minimum temperature of 120° C (250°F) for one hour. Flux shall be placed in the dispensing system immediately upon opening a package. If flux is used from an open package or an open hopper that has been inoperative for four hours or more, the top 25mm (one inch) shall be discarded. Flux that has been wet shall not be used. Flux fused in welding shall not be reused.

(1) **ELECTRODES, AND FLUX ELECTRODES COMBINATIONS**

Base Metal 1/ AASHO Designation (ASTM Designation)	Welding Process 2/ 3/ 4/			
	Shielded Metal-Arc	Submerged Arc	Gas Metal-Arc	Flux-Cored Arc
M 183 (A 36)	AWS A 5.1 or A 5.5 E 7016, 18 or 28	AWS A 5.17 F 61, F 62, F 63 or F 64-EXXX	AWS A 5.18 E 70S-1 B, 2, 3, 6 or E 70U-1	AWS A 5.20 E 60T-8
M 161 (A 242); M 188 (A 441); M 223 (A 572) Gr 42, 45, and 50; M 222 (A 588)	AWS A 5.1 or A 5.5 E 7016, 18 or 28	AWS A 5.17 F 71, F 72, F 73 or F 74-EXXX	AWS A 5.18 E 70S-1B, 2, 3, 6, or E 70U-1	AWS A 5.20 E 70T-1, 5 or 6
A 514, A 517	AWS A 5.5 E11018-M	Grade F 110	Grade E 110S	Grade E 110T

Use of same type filler metal having next higher mechanical properties as listed in AWS Specification is permitted.

1/ In joints involving base metals of different yield points or strength, filler metal applicable to the lower strength base metal may be used.

2/ When welds are to be stress-relieved, the deposited weld metal shall not exceed 0.05 percent vanadium.

3/ See AWS Art. 4.20 for Electroslag and Electrogas weld metal requirements, Appendix C Impact Requirements mandatory.

4/ Lower strength filler metal may be used for fillet welds and partial-penetration groove welds when indicated on the Plans or in the Special Provisions..

(2) Electrodes and flux-electrode combinations for unpainted applications. For exposed, bare, unpainted applications of A588 steel requiring deposited weld metal with atmospheric corrosion resistance and coloring characteristics similar to that of the base metal, the filler metal shall conform to the requirements listed in Table 4.14 of AWS D1.1-72.

In multiple-pass welds, the underlying layers may be deposited with one of the filler metals specified in the table for 510.23 (2) (a), provided the last three layers for shielded metal-arc, gas metal-arc, or flux-cored arc welding, or the last two layers for submerged-arc welding are deposited with one of the filler metals specified in the above table.

This procedure may also be used where the weld is made from one side on a backing strip which will be removed, providing the same number of layers are deposited against the backing strip with a filler metal specified in the table above.

After removing runoff tabs, the exposed weld metal of the underlying layers shall be removed by gouging to a minimum depth of 6mm (1/4 inch) from the edge of the base material, and replaced by welding with one of the filler metals specified in the table above. The weld shall be ground-flush with the edge of the material.

(3) PREHEAT AND INTERPASS TEMPERATURE

With the exclusion of Electroslag and Electrogas welding, preheat and interpass temperatures shall be as follows:

MINIMUM PREHEAT AND INTERPASS TEMPERATURE *			
	Welding Process		
Thickness of Thickest Point at Point of Welding	Shielded Metal-Arc Welding with Low Hydrogen Electrodes; Submerged Arc Welding with Carbon or Alloy Steel Wire. Neutral Flux; Gas Metal-Arc Welding; or Flux-Cored Arc Welding		Submerged Arc Welding with Carbon Steel Wire Alloy Flux
	AASHO M183 (ASTM A36); AASHO M161 (ASTM A242); AASHO M188 (ASTM A441); AASHO M223; AASHO M222	ASTM A514/517	ASTM A 514/517
To 19mm (3/4), Incl.	10° C (50 F)	10° C (50 F)	10° C (50 F)
Over 19mm to 38mm (3/4-1$\frac{1}{2}$") incl.	21° C (70 F)	52° C (125 F)	94° C (200F)
Over 38mm to 63mm (1$\frac{1}{2}$"-2$\frac{1}{2}$") Incl.	66° C (150 F)	80° C (175 F)	150° C (300F)
Over 63mm (2$\frac{1}{2}$")	107° C (225 F)	107° C (225F)	200° C (400F)

* See footnote page 408.

* When the base metal is below the temperature listed for the welding process being used and the thickness of material being welded, it shall be preheated (except as otherwise provided) in such manner that the surfaces of the parts on which weld metal is being deposited are at or above the specified minimum temperature for a distance equal to the thickness of the part being welded but not less than 76mm (3 inches), both laterally and in advance of the welding. Preheat and interpass temperatures must be sufficient to prevent crack formation. Temperature above the minimum shown may be required for highly restrained welds. For A514/A517 steel the maximum preheat and interpass temperature shall not exceed 200°C (400 F) for thickness up to 38mm ($1\frac{1}{2}$ in.), inclusive, and 230°C (450 F) for greater thickness. Heat input when welding A514/A517 steel shall not exceed the steel producer's recommendation. The use of stringer beads to avoid overheating is recommended. Welding shall be carried continuously to completion or to a point that will insure freedom from cracking before the joint is allowed to cool below the minimum specified preheat and interpass temperature.

(4) QUALIFICATION OF WELDERS, WELDING OPERATORS AND TACKERS

All welders, welding operators and tackers shall be qualified in accordance with the requirements of AWS D1.1-72. If a fabricating shop prequalifies its welders, welding operators and tackers according to the standard qualification procedures of the American Welding Society, and certifies to the Engineer that the welder, welding operator or tacker has been prequalified within twelve months previous to the beginning of work on the subject structure, the Engineer may

consider him qualified. The certificate shall state that the welder, welding operator or tacker has been doing satisfactory welding of the required type within the three-month period previous to the subject work. A certification shall be submitted for each welder, welding operator or tacker, and for each project, stating the name of the welder, welding operator or tacker, the name and title of the person who conducted the examination, the kind of specimens, the position of welds, the results of the tests and the date of the examination. Such a certification of prequalification may also be accepted as proof that a welder, welding operator and tacker on field welding is qualified, if the Contractor who submits it is properly staffed and equipped to conduct such an examination or if the examining and testing are done by a recognized agency which is staffed and equipped for such purposes.

In addition, evidence must be presented, satisfactory to the Engineer, that each welder, welding operator and tacker has had at least three months' satisfactory experience welding A514/A517 steel. In lieu of such experience, each welder, welding operator and tacker shall be instructed in welding A514/A517 steel. The instruction course shall meet the approval of the Engineer as adequate to result in a working knowledge of the procedures for welding A514/A517 steel.

(5) PROCEDURE QUALIFICATION

Procedure qualification of groove welds shall be in accordance with AWS D1. 1-72, except for the following modifications for groove welds in A514/A517 steel :

(a) A procedure qualification is required :

(1) With a plate thickness equal to the thickest material to be welded on the structure.

(2) Whenever there is an increase in plate thickness or whenever there is a decrease in plate thickness of 25mm (1 inch) or more. Thickness is a procedure variable.

(3) Whenever the number and location of passes are changed, except a proportional reduction in the number of passes is permissible without requalification whenever the thickness reduction is less than 25mm (1 inch) and the heat input does not exceed the manufacturer's recommendation for the heat input of the thickness of material being welded.

(4) Whenever the heat input is changed by more than ± 10%.

(5) Whenever the arc voltage is changed by more than ± 7%.

(6) Whenever the speed of travel is changed by more than ± 10%.

(7) Whenever the interpass temperature is changed by more than 15°C (± 25F).

(b) Reporting of the procedure qualification shall include specific values for all variables listed in (1) above and for those included in the AWS D1.1-72 procedure qualification.

Procedure qualification of fillet welds shall be in accordance with AWS D1. 1-72 and, in addition, for fillet welding of A514/A517 steel over 25mm (1 inch) in thickness with weld metal having minimum specified tensile strength of over

66.3 kg/ sq mm (90,000 psi), the qualification test of T-joints shall be in accordance with Figure 510.23A.

All qualification tests of groove welds shall be radiographically tested for soundness. Radiographic testing shall apply only to the portion of the weld between the discard strips as indicated in the applicable figures of Section 5 of AWS D1.1-72, except that a minimum of 15cm (6 inches) of effective weld length shall be tested.

If the radiographic inspection indicates any defect or porosity exceeding the requirements of Art. 9.25 of AWS D1.1-72, the procedure test shall be considered as having failed, except that, for the procedure qualification test for A514/A517 steel, there shall be no defects other than allowable porosity in the qualification test weld.

(6) INSPECTION OF WELDS

(a) GENERAL

Inspection of welds in all steel other than A514/A517 may begin immediately after they are completed. Welds in A514/A517 steel shall be inspected not less than 48 hours after they are completed.

In addition to inspection as required by AWS D1.1-72 and as required below under Radiographic and Magnetic Particle Testing, all welds shall be visually examined. Procedures, technique and standards of acceptance shall be in accordance with AWS D1.1-72.

(b) RADIOGRAPHIC TESTING

Butt welds in main members shall be tested radiographically as follows :

(1) All tension splices and all splices subject to reversal of stress, except that on girder and beam webs,

PROCEDURE QUALIFICATION
FILLET WELDED TEE JOINT TEST

FOR A 514/A 517 STEEL IN FLANGES OVER 25mm THICK (1") AND WITH MINIMUM SPECIFIED TENSILE STRENGTH OF DEPOSITED WELD METAL OVER 63.3 kg/sq .mm (90,000 psi.) MANUAL, AUTOMATIC AND SEMIAUTOMATIC

SHEET 1

FILLET WELD KEYHOLE "T" BEND TEST

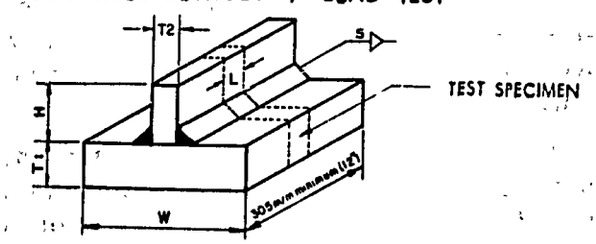

T1 = Design Section-Flange — H ≥ 4T2 or 50mm (2")
T2 = Design Section-Web — W ≥ 3T1 or 130mm (5")
S = Design Section-Fillet Weld — L ≥ $1\frac{1}{4}$T1 or 45mm (1 3/4")

NOTES

I. PREPARATION OF SPECIMENS

Test specimens may be sawed or machined (not flame-cut) from a welded sample, as illustrated above. These specimens are prepared as shown above.

II. TESTING

A. Macro Etch Test (See Procedure Qualification AWS D2.0).

B. Bend Tests

Specimen shall be loaded and failed as illustrated below.

C. Hardness Tests

Hardness Tests shall be made on a lightly etched section of Macroetched test specimens with a suitable machine.

FIGURE 510.23A

PROCEDURE QUALIFICATION
FILLET WELDED TEE JOINT TEST

SHEET 2

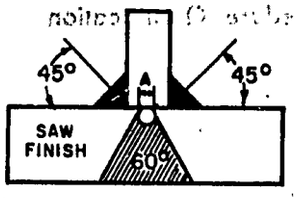

Drill Hole "A" To Equal $\frac{T2}{2} + 1.6mm \left(\frac{1}{16} \text{ inch}\right)$ Cut-out Cross Hatched Area

Specimen

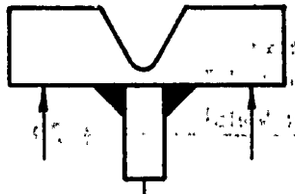

Support Support

Load At Beginning of Test

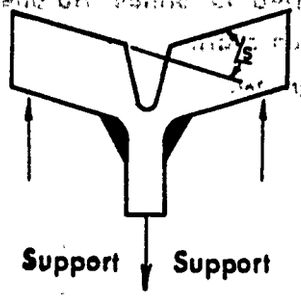

Support Support

Load At Intermediate Stage of Test Illustrating Manner of Bend

Load and bend to failure or until keyhole "V" notch is closed. Failure is indicated by opening in weld surface or cross-section greater than 1.6mm (1/16") in any direction.

FIGURE 510.23A

PROCEDURE QUALIFICATION
FILLET WELDED TEE JOINT TEST

SHEET 3

III. TEST RESULTS REQUIRED

A. Macro Etch Test (See Procedure Qualification AWS D2.0)

B. Bend Tests

$\angle s$ must not be less than 18° at failure

C. Hardness

Brinell Hardness of weld metal shall be within the following limits:

1. Max. Brinell Hardness:

$$\frac{\text{Max. Specified or Tested Tensile Strength (*) of Parent Metal}}{500} + 70$$

2. Min. Brinell Hardness

$$\frac{\text{Min. Specified Tensile Strength of Weld Metal}}{500}$$

This test may be performed with a Rockwell Machine and converted to Brinell Hardness using ASTM conversion chart.

(*) Whichever is greater.

FIGURE 510.23A

only 1/6 of the web depth, beginning at the point or points of maximum tension, and 25 percent of the remainder of the web depth need be radiographed.

(2) 25% of each compression and shear splice, except that for splices in built-up members requiring less than 1.2m (4 ft) of groove weld in compression, only one joint connecting the thickest components in each splice need be radiagraphed. Maximum spacing of the radiographs shall be four times the length of the radiographs. Alternatively, 25% of the compression and shear splices selected by the Engineer shall be radiographed. When and if unacceptable defects are found in more than 10% of the radiographs of the compression and shear splices of a member, all compression and shear splices of that and succeeding members shall be radiographed until the accumulated rejection level falls to 10% or less, at which time the radiographing shall revert to the 25% level specified above.

(3) Should a radiograph indicate rejectable defects, the areas on each side of the defect shall be radiographed to determine the extent of the defective work.

(4) Defective welds shall be radiographed after repair.

(5) The Inspector shall view the making of the radiographs, examine and interpret the radiographs and the technician's reports, approve satisfactory welds, disapprove or reject unsatisfactory welds, approve satisfactory methods proposed by the Contractor for repairing disapproved welds, and

inspect the preparation and rewelding of disapproved welds. The Inspector shall record the location and findings of all radiographic inspections, together with descriptions of any repairs made.

(c) MAGNETIC PARTICLE TESTING

(1) For A 514/ A 517 steel, fillet welds and all other welds, except the butt welds radiographed in accordance with subparagraph (b) above, shall be 100% magnetic-particle tested. Defective welds shall be retested after repair.

(2) The Inspector shall view he making of the magnetic particle inspections, examine and interpret the magnetic particle patterns, approve satisfactory welds, disapprove or reject unsatisfactory welds, approve satisfactory methods proposed by the Contractor for repairing disapproved welds, and inspect the preparation and rewelding of disapproved welds. The Inspector shall record the locations of inspected areas and defects found by magnetic particle inspection, together with a description of any repairs made.

(7) STUD SHEAR CONNECTORS

(a) Stud shear connectors shall be of a design suitable for electric end-welding and shall be end-welded to steel beams, girders or plates with automatically timed stud welding equipment connected to a suitable power source. The type, size of diameter and length of stud shall be as specified by the Plans, Specifications or Special Provisions. (See Figure 510.23B for allowable tolerances or dimensions). A maximum variation of 25mm (one inch) from the location shown will be accepted,

provided the adjacent studs are not closer than 65mm ($2\frac{1}{2}$ inches) center to center and clearances specified in Article 1.7.98 of the Design Specifications are maintained. Adequate provision shall be made in the fabrication of structural members to compensate for loss of camber due to welding of the shear connectors.

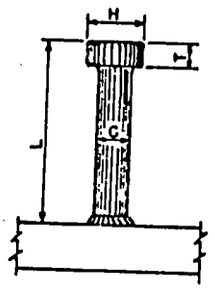

STUD SHEAR CONNECTOR(2)

DIMENSIONS AND TOLERANCES

STANDARD DIMENSIONS - INCHES			
C	L(1)	H	T
$\frac{3}{4}$" + .000" − .015"	4" + .062" − .125"	$1\frac{1}{4}$" ± $\frac{1}{64}$"	$\frac{3}{8}$" Min.
$\frac{7}{8}$" + .000" − .015"	4" + .062" − .125"	$1\frac{3}{8}$" ± $\frac{1}{64}$"	$\frac{3}{8}$" Min

FIGURE 2.10.23B

(1) 4" Length is standard. Other lengths may be obtained by special order.

(2) Finished studs shall be of uniform quality and condition, free from injurious laps, flaw, seams, cracks, twists, bends or other injurious defects. Finish shall be as produced by cold drawing, cold rolling or machining. Heads of shear connector or anchor studs are subject to cracks or bursts, which are names for the same thing. Cracks and bursts designate an abrupt interruption of the periphery of the head of the stud by radial separation of the metal. Such interruptions do not adversely affect the structural strength, corrosion resistance or other functional requirements of shear connector or anchor studs. A stud with cracks or bursts deeper than one-half the distance from the periphery of the head of the shank may be cause for rejection.

(b) If two or more stud welding guns are to be operated from the same power source, they shall be interlocked so that only one gun can operate at a time and so that the power source has fully recovered from making one

weld before another weld is started. The power source shall be adequate for the size of stud being welded.

(c) Studs shall not be painted or galvanized. The studs shall be free from excessive rust, scale, rust pits and oil at the time of welding, as determined by the Engineer. The beam surface to which the studs are welded shall be free from excessive mill scale, rust, dirt, paint, grease or any other material which might impair the satisfactory welds, the areas on the beam, girder or plate to which the studs are to be welded shall be wire-brushed, peened, prick-punched, or ground—free of scale or rust.

(d) Welding shall not be done when the surface is wet or exposed to rain.

(e) While in operation the welding gun shall be held in position without movement until the weld metal has solidified.

(f) An arc shield (ferrule) of heat-resistant ceramic or other material shall be furnished with each stud. The material shall not be detrimental to the welds or cause excessive slag, and shall have sufficient strength so as not to crumble or break due to a thermal or structural shock before the weld is completed.

Ferrules furnished with shop—welded studs shall be removed in the shop prior to delivery, and ferrules furnished with field—welded studs shall be removed before placing concrete slabs.

(g) Flux for welding shall be furnished with each stud, either attached to the end of the stud or combined with the arc shield for automatic application in the welding operation.

(h) Only qualified studs shall be used. A stud to be qualified shall have passed the tests prescribed in Paragraph (1) of this Article. The arc shield used in production shall be the same as used in the qualification tests. Qualification of the studs, prior to use under the contract, shall be at the expense of the manufacturer.

(i) The Contractor shall submit to the Engineer for approval, before installation, information on the studs to be furnished. Desirable information would include :

(1) The name of the manufacturer.

(2) A detailed description of the stud and arc shield.

(3) A certification from the manufacturer that the stud is qualified as specified in paragraph (1).

(4) A notarized copy of the qualification test report as certified by the testing laboratory.

(j) The studs, after welding, shall be free from any defect or substance which would interfere with their function as shear connectors.

(k) Stud-Weldability Qualification Procedure

(1) PURPOSE

The purpose of this procedure is to prescribe weldability tests that will qualify a shear connector stud for welding under shop or field conditions. The tests may be performed by a university, independent laboratory or other testing agency satisfactory to the Engineer. The agency performing the tests shall submit to the manufacturer of the stud a certified report giving procedures and results for all tests including the information listed under subparagraph (8).

(2) DURATION OF QUALIFICATION

A type and size of stud with arc shield, once qualified, are considered qualified until the manufacturer makes any change in the base of the stud, the flux or the arc shield which affects the welding characteristics.

(3) PREPARATION OF SPECIMENS

(a) Test specimens shall be prepared by welding representative studs to the center of square specimen plates 13 to 20mm (1/2 to 3/4 inch) thick, of structural steel, AASHO M 183 (ASTM A 36). At the option of the manufacturer, studs may be welded to a large plate and the specimen plates cut to a size suitable for test equipment used.

(b) Studs shall be welded with power source, welding gun and control equipment as recommended by the manufacturer. Welding voltage, current and time (see subparagraph (4)) shall be measured by suitable instrumentation and recorded for each specimen. Lift and plunge shall be at the optimum setting as recommended by the manufacturer.

(4) NUMBER OF TEST SPECIMENS

(a) Thirty (30) test specimens shall be welded consecutively with optimum time held constant, but current 10% above optimum. Optimum current and time shall be the midpoint of the range normally recommended by the manufacturer for production welding.

(b) Thirty (30) test specimens shall be welded consecutively with time held constant at optimum, but with current 10% below optimum.

(5) QUALIFICATION TESTS

(a) Tensile tests - Ten (10) of the specimens welded in accordance with subparagraph (4) (a) and ten (10) of the specimens welded in accordance with subparagraph (4) (b) shall be subjected to a tensile test in a fixture similar to that shown in Figure 510.23C. A stud shall be considered as qualified for tensile tests if all test specimens have a minimum tensile strength of 42kg/sq mm (60,000 psi).

(b) Bend tests - Twenty (20) of the specimens welded in accordance with subparagraph (4) (a) and twenty (20) specimens welded in accordance with subparagraph (4) (b) shall be placed in a bend-testing device shown in Figure 510.23D, and bent alternately 30 degrees in opposite directions until failure occurs. A stud shall be considered qualified for bend tests if, on all test specimens, fracture occurs in the stud or in the plate, but not in the weld.

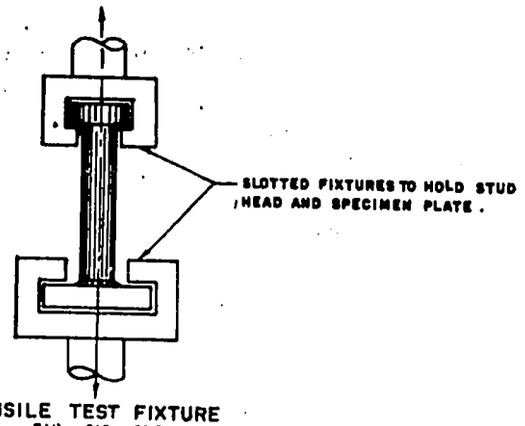

TENSILE TEST FIXTURE
FIG. 510.23C

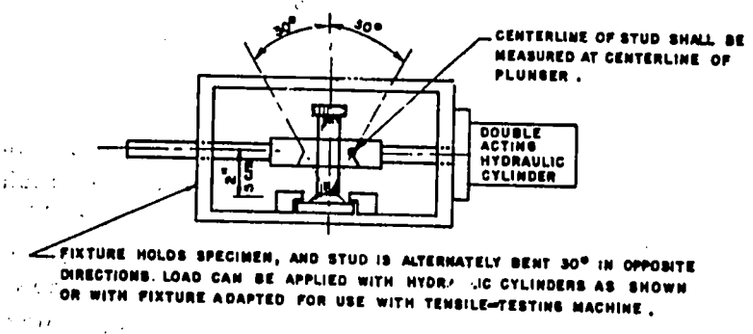

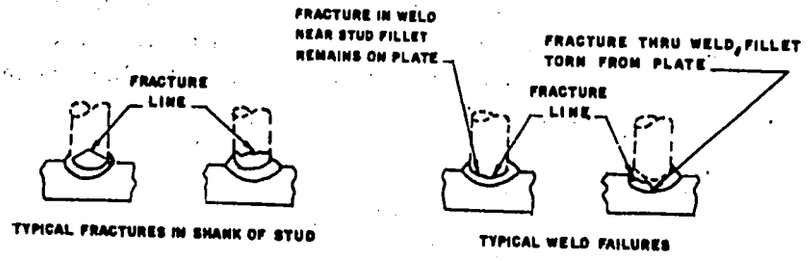

BEND-TEST FIXTURE AND FAILURES
FIG. 510.23D

(6) RETESTS

If a failure occurs in any of the tensile or bend-test groups, that group may be retested. If failure repeats, the stud shall fail to qualify.

(7) QUALIFICATION

For a manufacturer's studs and arc shields to be qualified, each group of thirty (30) studs shall, by tests or retest, meet the requirements prescribed in subparagraph (5) (a) and (5) (b).

(8) REPORT OF TESTS

The laboratory report shall include the following :

(a) Drawings which show shapes and dimensions with tolerances of studs, arc shields and flux.

(b) A complete description of materials used in the studs and arc shields, including the quantity and analysis of the flux.

(c) A certification that the studs and arc shields described in the report are qualified in accordance with paragraph (l) (7) of this Article.

(l) The first two studs welded on each beam or girder, after being allowed to cool, shall be bent 45° by striking the stud with a hammer. If failure occurs in the weld of either stud, the procedure shall be corrected and two successive studs successfully welded and tested before any more studs are welded to the beam or girder. The Engineer shall be promptly informed of any changes in the welding procedure at any time during construction.

(m) Studs on which a full 360° weld is not obtained may, at the option of the Contractor, be repaired by adding

a 5mm (3/16") fillet weld in place of the lack of weld, using the shielded metal-arc process with low-hydrogen welding electrodes.

(n) If the reduction in the height of studs as they are welded becomes less than normal, welding shall be stopped immediately and not resumed until the cause has been corrected.

(o) Before welding a new stud where a defective one has been removed, the area shall be ground smooth and flush, or in the case of a pullout of metal, the pocket shall be filled with weld metal using the shielded metal-arc process with low-hydrogen welding electrodes and then ground flush. In compression areas of flanges, a new stud may be welded adjacent to the defective area in lieu of repair and replacement on existing weld area. (See paragraph (7) (a) of this Article).

(p) INSPECTION REQUIREMENTS

(1) After the studs have been welded to the beams, a visual inspection shall be made and each stud shall be given a light blow with a hammer. Any stud which does not have a complete end weld, any stud which does not emit a ringing sound when given a light blow with a hammer, any stud that has been repaired by welding, or any stud which has less than normal reduction in height due to welding, shall be struck with a hammer and bent 15° from the correct axis of installation; and in the case of a defective or repaired weld the stud shall be bent 15° in the direction that will place that defective portion of the weld in the greatest tension. Studs that crack either in the weld or in the shank shall be replaced.

Studs which are to be replaced for the above reasons or because they have been otherwise rendered unacceptable may be manually welded, with a full 360° 6mm (1/4") fillet weld for 19mm (3/4") studs and with a full 360° 8mm (5/16") fillet weld for 22mm (7/8") and 25mm (1") studs as specified under G (14) and G (16) above.

(2) The Engineer, at his option, may select additional studs to be subjected to the bend test specified above.

(3) The studs tested that show no sign of failure shall be left in the bent position.

(4). If, during the progress of the work, inspection and testing indicate in the judgment of the Engineer that the shear connectors being obtained are not satisfactory, the Contractor will be required at his expense to make such changes in welding procedure, welding equipment and type of shear connector as necessary to secure satisfactory results.

(5). At the option of the Engineer, the Contractor may be required at any time to submit studs of the types used under the contract for check qualification by the Engineer in accordance with the procedures of 510.23 (7). In the event such studs are required for checking their qualification, payment will be made to the Contractor for the studs so furnished.

510.24 OXYGEN CUTTING

Steel and weld metal may be oxygen-cut, provided a smooth and regular surface free from cracks and notches is

secured, and provided that an accurate profile is secured by the use of a mechanical guide. Hand cutting shall be done only where approved by the Engineer.

Mill scale and extraneous material shall be removed from the torch side of A514/ A517 steel plates along the lines to be flame-cut, when necessary to obviate excessive notches.

All oxygen cutting shall be in accordance with AWS D1.1-72, except that occasional notches or gouges in edges of A514/ A517 steel shall not be repaired by welding except under the following conditions :

(1) Cutting defects not more than 5mm (3/16 inch) deep in plate edges which will form the faces of a groove weld joint and which will subsequently be completely fused with the weld may be repaired by welding. Nonmetallic stringers or pipes opening to these edges shall be removed to a depth of 6mm (1/4 inch) below the surface by grinding or chipping, and the gouge repaired by welding. Laminations opening to these edges shall be removed to a depth of 13mm (1/2 inch) below the surface by grinding and chipping and the gouge repaired by welding.

(2) Cutting defects not more than 5mm (3/16 inch) deep in plate edges which will form a fillet-welded corner joint shall be repaired by welding only on the part of the edge which will become the faying surface for the joint and the fusion zone of the fillet weld. The part of the defect outside the toe of the completed fillet weld shall be removed by machining or grinding, and faired with the surface of the cut on a bevel of 1 to 6 or less.

(3) All welding for these repairs shall be made by suitably preparing the defect, welding with low-hydrogen electrodes not exceeding 4mm (5/32 inch) in diameter, observing the applicable requirements of Section 510.23, and grinding

the completed weld smooth and flush with the adjacent surface to produce a workmanlike finish.

Oxygen-cut edges of AASHO M 187 (ASTM A 440) steel 13mm (1/2 inch) or greater in thickness* shall be removed to a depth of at least 3mm (1/8 inch) by machining or grinding, except that machine flame-cut edges may be used without such removal if the edges are softened after cutting : (a) by heating the cut edge uniformly and progressively to a red heat, visible in ordinary shop light 620° to 680°C (1,150 to 1,250 F) to a depth of at least 2mm (1/16 inch) ; or (b) by means of a post heating torch attached to and following the cutting torch with the tips, gas pressure, speed of travel and the distance of the post heating torch from the kerf regulated to the thickness of the steel. Bend-test specimens 38mm ($1\frac{1}{2}$ inches) wide and of the full thickness of the material or with thickness reduced to 19mm (3/4 inch) in accordance with Paragraph 6.3.5 of ASTM A 6, and having edges flame-cut and flame-softened in accordance with this Article shall meet the bend-test requirements specified in AASHO M 187 (ASTM A 440) for the thickness of material under consideration.

Oxygen-cut surfaces of members carrying calculated stress shall have their corners rounded to 2mm (1/16 inch) radius by grinding after cutting.

510.25 FACING OF BEARING SURFACES

The surface finish of bearing and base plates and other

* AASHO M 161 (ASTM A 242) steel not approved for welded construction requires this treatment or oxygen-cut edges in all thicknesses and with bend tests, as applicable, conforming to AASHO M 161 (ASTM A 242) for the thickness of material under consideration.

bearing surfaces that are to come in contact with each other or with concrete shall meet the ANSI surface roughness requirements as defined in ANSI B46.1, Surface Roughness, Waviness and Lay, Part I:

Steel slabs	ANSI	2,000
Heavy plates in contact in shoes to be welded	ANSI	1,000
Milled ends of compression members, milled or ground ends of stiffeners and fillers	ANSI	500
Bridge rollers and rockers	ANSI	250
Pins and pin holes.	ANSI	125
Sliding bearings	ANSI	125

510.26 ABUTTING JOINTS

Abutting joints in compression members and girder flanges, and in tension members where so specified on the drawings, shall be faced and brought to an even bearing. Where joints are not faced, the opening shall not exceed 6mm (1/4 inch).

510.27 END CONNECTION ANGLES

Floorbeams, stringers, and girders having end-connection angles shall be built to exact length shown on the Plans measured between the heels of the connection angles, with a permissible tolerance of plus 0mm to minus 2mm (0 to minus 1/16 inch). Where continuity is to be required, end connections shall be faced. The thickness of the connection angles shall not be less than 10mm (3/8 inch), nor less than that shown on the detail drawings, after facing.

510.28 LACING BARS

The ends of lacing bars shall be neatly rounded, unless another form is required.

510.29 FINISHED MEMBERS

Finished members shall be true to line and free from twists, bends and open joints.

510.30 WEB PLATES

In girders having no cover plates and not to be encased in concrete, the top edge of the web plate shall not extend above the backs of the flange angles, and shall not be more than 3mm (1/8 inch) below at any point. Any portion of the plate projecting beyond the angles shall be chipped flush with the backs of the angles. Web plates of girders having cover plates may be 13mm (1/2 inch) less in width than the distance back-to-back of flange angles.

Splices of webs in girders without cover plates shall be sealed on top with red lead paste prior to painting.

At web splices, the clearance between the ends of the web plates shall not exceed 10mm (3/8 inch). The clearance at the top and bottom ends of the web splice plates shall not exceed 6mm (1/4 inch).

510.31 BENT PLATES

Unwelded, cold-bent, load-carrying, rolled-steel plates shall conform to the following :

(a) They shall be so taken from the stock plates that the bend line will be at right angles to the direction of rolling, except that cold-bent ribs for orthotropic deck bridges may be bent in the direction of rolling if permitted by the Engineer.

(b) Bending shall be such that no cracking of the plate occurs. Minimum bend radii, measured to the concave face of the metal, are shown in the following table :

THICKNESS

	MILLIMETER	UP TO 12	OVER 12 TO 26	OVER 26 TO 38	OVER 38 TO 64	OVER 64 TO 102
	INCHES	UP TO 1/2	OVER 1/2 TO 1	OVER 1 TO 1 1/2	OVER 1 1/2 TO 2 1/2	OVER 2 1/2 TO 4
ALL GRADES OF STRUCT'L STEEL IN THIS SPECIFIC'N	–	2 T	2 1/2 T	3 T	3 1/2 T	4 T

NOTE : Low-alloy steel in thicknesses over 12mm (1/2") may require hot bending for small radii.

Allowance for springback of A514 and A517 steels should be about 3 times that for structural carbon steel. For brake press forming, the lower die span should be at least 16 times the plate thickness. Multiple hits are advisable.

If a shorter radius is essential, the plates shall be bent hot at a temperature not greater than 650° C (1200 F), except for A514/A517 steel. If A514/A517 steel plates to be bent are heated to a temperature greater than 610° C (1124 F), they must be requenched and tempered in accordance with the producing mill's practice. Hot-bent plates shall conform to requirement (a) above.

(c) Before bending, the corners of the plate shall be rounded to a radius of 2mm (1/16 inch) throughout the portion of the plate at which the bending is to occur.

510.32 FIT OF STIFFENERS

End stiffeners of girders and stiffeners intended as supports for concentrated loads shall have full bearing (either milled, ground or, on weldable steel in compression areas of flanges, welded as shown on the Plans or specified) on the flanges to which they transmit load or from which they receive load. Stiffeners not intended to support concentrated loads shall, unless shown or specified otherwise, fit sufficiently tight to exclude water after being painted. Fillers under stiffeners shall fit within 6mm (1/4 inch) at each end.

510.33 EYEBARS

Pin holes may be flame-cut at least 50mm (2") smaller in diameter than the finished pin diameter. All eyebars that are to be placed side by side in the structure shall be securely fastened together in the order that they will be placed on the pin and bored at both ends while so clamped. Eyebars shall be packed and match-marked for shipment and erection. All identifying marks shall be stamped with steel stencils on the edge of one head of each member after fabrication is completed so as to be visible when the bars are nested in place on the structure. The eyebars shall be straight and free from twists, and the pin holes shall be accurately located on the centerline of the bar. The inclination of any bar to the plane of the truss shall not exceed 2mm in 30cm (1/16 inch to a foot).

The edges of eyebars that lie between the transverse centerline of their pin holes shall be cut simultaneously with two mechanically-operated torches abreast of each other, guided by a substantial template, in such a manner as to prevent distortion of the plates.

510.34 ANNEALING AND STRESS RELIEVING

Structural members which are indicated in the contract to

be annealed or normalized shall have finished-machining, boring and straightening done subsequent to heat treatment. Normalizing and annealing (full annealing) shall be as specified in ASTM E 44. The temperatures shall be maintained uniformly throughout the furnace during the heating and cooling so that the temperature at no two points on the member will differ by more than 56°C (100 F) at any one time.

Members of A514/ A517 steels shall not be annealed or normalized, and shall be stress-relieved only with the approval of the Engineer.

A record of each furnace charge shall identify the pieces in the charge and show the temperatures and schedule actually used. Proper instruments, including recording pyrometers, shall be provided for determining at any time the temperatures of members in the furnace. The records of the treatment operation shall be available to and meet the approval of the Engineer. The holding temperature for stress-relieving A514/A517 steel shall not exceed 600°C (1125 F).

Members, such as bridge shoes, pedestals or other parts which are built up by welding sections of plate together, shall be stress-relieved in accordance with the procedure of paragraph 3.9 of AWS D1.1-72, when required by the Plans, Specifications, or Special Provisions governing the contract.

510.35 PINS AND ROLLERS

Pins and rollers shall be accurately turned to the dimensions shown on the drawings, and shall be straight, smooth and free from flaws. Pins and rollers more than 23cm (9") in diameter shall be forged and annealed. Pins and rollers 23cm (9") or less in diameter may be either forged and annealed or cold-finished carbon-steel shafting.

In pins larger than 23cm (9") in diameter, a hole not

less than 50mm (2") in diameter shall be bored full-length along the axis after the forging has been allowed to cool to a temperature below the critical range, under suitable conditions to prevent injury by too rapid cooling and before being annealed.

510.36 BORING PIN HOLES

Pin holes shall be bored true to the specified diameter, smooth and straight, at right angles with the axis of the member and parallel with each ott er unless otherwise required. The final surface shall be produced by a finishing cut.

The distance outside-to-outside of end holes in tension members and inside-to-inside of end holes in compression members shall not vary from that specified more than 0.8mm (1/32 inch). Boring of holes in built-up members shall be done after the riveting is completed.

510.37 PIN CLEARANCES

The diameter of the pin hole shall not exceed that of the pin by more than 0.5mm (1/50 inch) for pins 12.7cm (5") or less in diameter, or by 0.8mm (1/32 inch) for larger pins.

510.38 THREADS FOR BOLTS AND PINS

Threads for all bolts and pins for structural steel construction shall conform to the Unified Standard Series UNC-ANSI B1.1, Class 2A for external threads and Class 2B for internal threads, except that pin ends having a diameter of 35mm (1 3/8") or more shall be threaded 2 threads per centimeter (6 per inch).

510.39 PILOT AND DRIVING NUTS

Two pilot nuts and two driving nuts for each size of pin shall be furnished, unless otherwise specified.

510.40 NOTICE OF BEGINNING OF WORK

The Contractor shall give the Engineer ample notice of the beginning of work at the mill or in the shop, so that inspection may be provided. The term "mill" means any rolling mill or foundry where material for the work is to be manufactured. No material shall be manufactured, or work done in the shop, before the Engineer has been so notified.

510.41 FACILITIES FOR INSPECTION

The Contractor shall furnish facilities for the inspection of material and workmanship in the mill and shop, and the Inspectors shall be allowed free access to the necessary parts of the works.

510.42 INSPECTOR'S AUTHORITY

Inspectors shall have the authority to reject any material or work which does not meet the requirements of these Specifications. In case of dispute the Contractor may appeal to the Engineer, whose decision shall be final.

510.43 WORKING DRAWINGS AND IDENTIFICATION OF STEEL DURING FABRICATION

(1) WORKING DRAWINGS

The Contractor shall submit copies of the detailed shop drawings to the Engineer for approval. Any work done prior to the approval of these Plans shall be at the Contractor's risk. When material must be ordered in advance, specific approval of such an action shall be obtained by the Contractor prior to placing the order. Shop drawings for steel structures shall give full detailed dimensions and sizes of component parts of the structure and details of all miscellaneous parts, such as pins, nuts, bolts, rivets and drains.

The Contractor shall expressly understand that the Engineer's approval of the working drawings submitted by the Contractor covers the requirements for "strength and detail", and the Engineer assumes no responsibility for errors in dimensions.

(2) IDENTIFICATION OF STEELS DURING FABRICATION

(a) IDENTIFICATION BY CONTRACTOR

The Engineer shall be furnished with complete certified mill-test reports showing chemical analysis and physical tests for each heat of steel for all members, unless excepted by the Engineer. Each piece of steel to be fabricated shall be properly identified for the Engineer.

Shop drawings shall specifically identify each piece that is to be made of steel which is to be other than AASHO M 183 (ASTM A 36) steel. Pieces made of different grades of steel shall not be given the same assembling or erecting mark, even though they are of identical dimensions and detail.

The Contractor's system of assembly-marking individual pieces, required to be made of steel other than AASHO M 183 (ASTM A 36) steel, and the issuance of cutting instructions to the shop (generally by cross-referencing of the assembly-marks shown on the shop drawings with the corresponding item covered on the mill purchase order) shall be such as to maintain identity of the mill test report number.

The Contractor may furnish from stock material that he can identify by heat number and mill test report.

Any excess material placed in stock for later use shall

be marked with the mill-test report number and shall be marked with its AASHO M 160 (ASTM A 6) Specification identification color code (see Table 510.43), if any, when separated from the full-size piece furnished by the supplier.

(b) IDENTIFICATION OF STEELS DURING FABRICATION

During fabrication up to the point of assembling members, each piece of steel, other than AASHO M 183 (ASTM A 36) steel, shall show clearly and legibly its Specification identification color code shown in Table 510.43.

Individually marked pieces of steel which are used in furnished size, or duced from furnished size only by end or edge trim that does not disturb the heat number or color code or leave any usable piece, may be used without further color coding, provided that the heat number or color code remains legible.

Pieces of steel, other than AASHO M 183 (ASTM A 36) steel, which, prior to assembling into members, will be subject to fabricating operations such as blast-cleaning, galvanizing, heating for forming, or painting which might obliterate paint color-code marking, shall be marked for grade by steel-die stamping or by a substantial tag firmly attached.

The following identification color code shall be used to identify material required to meet the individual Specifications listed Table 510.43.

TABLE 510.43

IDENTIFICATION COLOR CODES

AASHO M 161 (A 242)		Blue
AASHO M 187 (A 440)		Brown
AASHO M 188 (A 441)		Yellow
	A 514	Red
	A 517	Red and Blue
AASHO M 223 (A 572)		Grade 42 Green & White
		Grade 45 Green & Black
		Grade 50 Green & Yellow
		Grade 55 Green & Brown
		Grade 60 Green & Gray
		Grade 65 Green & Blue
AASHO M 222 (A 588)		Blue and Yellow

Other steels, except AASHO M 183 (ASTM A 36) steel, not covered above nor included in the AASHO M 160 (ASTM A 6) Specification, shall have an individual color code which shall be established and on record for the Engineer.

(c) CERTIFICATION OF IDENTIFICATION

Upon request, the Contractor shall furnish an affidavit certifying that throughout the fabrication operation he has maintained the identification of steel in accordance with this Specification.

510.44 WEIGHING OF MEMBERS

In case it is specified that any part of the material is to be paid for by actual weight, finished work shall be weighed in the presence of the inspector, if practicable. In such case, the

Contractor shall supply satisfactory scales and shall perform all work involved in handling and weighing the various parts.

510.45 FULL-SIZE TESTS

When the full-size tests of fabricated structural members or eyebars are required by the contract, the Plans or Specifications shall state the number and nature of the tests, the results to be attained and the measurements of strength, deformation or other performance that are to be made. The Contractor shall provide suitable facilities, material, supervision and labor necessary for making and recording the tests. The members tested in accordance with the contract shall be paid for in accordance with Section 510.64. The cost of testing, including equipment, handling, supervision, labor and incidentals for making the tests, shall be included in the contract price for the fabrication or fabrication and erection of structural steel, whichever is the applicable item in the contract, unless otherwise specified.

510.46 MARKING AND SHIPPING

Each member shall be painted or marked with an erection mark for identification, and an erection diagram shall be furnished with erection marks shown thereon.

The Contractor shall furnish to the Engineer as many copies of material orders, shipping statements and erection diagrams as the Engineer may direct. The weights of the individual members shall be shown on the statements. Members weighing more than 2.7 metric tons (6,000 lb) shall have the weights marked thereon. Structural members shall be loaded on trucks or cars in such a manner that they may be transported and unloaded at their destination without being excessively stressed, deformed or otherwise damaged.

Bolts and rivets of one length and diameter and loose nuts

or washers of each size shall be packed separately. Pins, small parts and packages, bolts, rivets, washers and nuts shall be shipped in boxes, crates, kegs or barrels, but the gross weight of any package shall not exceed 140 kilograms (300 lbs). A list and description of the contained material shall be plainly marked on the outside of each shipping container.

510.47 PAINTING

Unless otherwise shown on the Plans or specified, all iron and steel surfaces shall be cleaned and painted in accordance with Section 514.

ERECTION

510.48 VACANT

510.49 ERECTION OF STRUCTURE

The Contractor shall erect the metalwork, remove the temporary construction and do all the work required to complete the bridge or bridges as covered by the agreement, including the removal of the old structure or structures, if stipulated, all in accordance with the Plans and these Specifications.

510.50 VACANT

510.51 PLANT

The Contractor shall provide the falsework and all tools, machinery and applicances, including drift pins and fitting-up bolts, necessary for the expeditious handling of the work.

510.52 VACANT

510.53 HANDLING AND STORAGING MATERIALS

Material to be stored shall be placed on skids above the

ground. It shall be kept clean and properly drained. Girders and beams shall be placed upright and shored. Long members such as columns and chords, shall be supported on skids placed near enough together to prevent injury from deflection. If the contract is for erection only, the Contractor shall check the material turned over to him against the shipping lists, and report promptly in writing any shortage or injury discovered. He shall be responsible for the loss of any material while in his care, or for any damage caused to it after being received by him.

510.54 FALSEWORK

The falsework shall be properly designed and substantially constructed and maintained for the loads which will come upon it. The Contractor, if required, shall prepare and submit to the Engineer for approval, plans for falsework or for changes in an existing structure necessary for maintaining traffic. Approval of the Contractor's plans shall not be considered as relieving the Contractor of any responsibility.

510.55 METHODS AND EQUIPMENT

Before starting the work of erection, the Contractor shall inform the Engineer fully as to the method of erection he proposes to follow, and the amount and character of equipment he proposes to use, which shall be subject to the approval of the Engineer. The approval of the Engineer shall not be considered as relieving the Contractor of the responsibility for the safety of his method or equipment, or from carrying out the work in full accordance with the Plans and Specifications. No work shall be done until such approval by the Engineer has been obtained.

510.56 BEARINGS AND ANCHORAGES

Bridge bearings shall be set level, in exact position, and must have full and even bearing on the masonry.

Elastomeric bearing pads, if used, shall set directly on the concrete masonry.

Cast iron or steel, or rolled-steel bearings shall be bedded on the masonry with alternate layers of red lead and canvas, or a single thickness of sheet lead or preformed-fabric bearing pad.

The Contractor shall drill holes for anchor bolts and set them in Portland cement grout, or preset them as shown on the Plans or as specified.

Location of anchors and setting of rockers or rollers shall take into account any variations from mean temperature at time of setting and anticipated lengthening of bottom chord or bottom flange due to dead load after setting, the intention being that, as near as practicable, at mean temperature and under dead load the rockers and rollers shall set vertical, and anchor bolts at expansion bearings will center their slots. Care shall be taken that full and free movement of the superstructure at the movable bearings is not restricted by improper setting or adjustment of bearings or anchor bolt and nuts.

Bridge bearings shall not be placed on masonry bearing areas which are irregular or improperly formed.

510.57 STRAIGHTENING BENT MATERIAL AND CAMBERING

(1) STRAIGHTENING BENT MATERIAL

The straightening of plates, angles, other shapes and built-up members, when permitted the Engineer, shall be done by methods that will not produce fracture or other injury. Distorted members shall be straightened by mechanical means or, if approved by the Engineer, by the careful, planned and supervised application of a limited amount of localized heat, except that heat-straightening of A514/A517 steel members shall be done only under rigidly controlled procedures, each application subject

to the approval of the Engineer. In no case shall the maximum temperature of the A514/A517 steel exceed 620°C (1125 F), nor shall the temperature exceed 510°C (950F) at the weld metal or within 15cm (6 inches) of weld metal. Heat shall not be applied directly on weld metal. In all other steels, the temperature of the heated area shall not exceed 650°C (1200 F) (a dull red) as controlled by temperature indicating crayons, liquids or bimetal thermometers.

Parts to be heat straightened shall be substantially free of stress and from external forces, except stresses resulting from mechanical means used in conjunction which the application of heat.

Following the straightening of a bend or buckle, the surface of the metal shall be carefully inspected for evidence of fracture.

(2) CAMBERING

Correction of errors in camber in welded beams and girders of A514/A517 material shall be done only under rigidly controlled procedures, each application subject to approval of the Engineer.

510.58 ASSEMBLING STEEL

The parts shall be accurately assembled as shown on the Plans and any match-marks shall be followed. The material shall be carefully handled so that no parts will be bent, broken or otherwise damaged. Hammering which will injure or distort the members shall not be done. Bearing surfaces and surfaces to be in permanent contact shall be cleaned before the members are assembled. Unless erected by the cantilever method, truss spans shall be erected on blocking so as to give the trusses proper camber. The blocking shall be left in place until the tension chord splices are fully riveted or bolted and all other

truss connections pinned and bolted. Rivets or permanent bolts in splices of butt joints of compression members and rivets or permanent bolts in railings shall not be driven or tightened until the span has been swung. Splices and field connections shall have one-half of the holes filled with bolts and cylindrical erection pins (half bolts and half pins) before riveting or bolting with high-strength bolts. Splices and connections carrying traffic during erection shall have three-fourths of the holes so filled.

Fitting-up bolts shall be of the same nominal diameter as the rivets or high-strength bolts, and cylindrical erection pins shall be 0.8mm (1/32 inch) larger.

510.59 RIVETING

Pneumatic hammers shall be used for field riveting, except when the use of hand tools is permitted by the Engineer. Rivets larger than 23mm (7/8 inch) in diameter shall not be driven by hand. Cup-faced dollies, fitting the head closely to insure good bearing, shall be used. Connections shall be accurately and securely fitted up before the rivets are driven. Drifting shall be only such as to draw the parts into position and not sufficient to enlarge the holes or distort the metal. Holes, not true, shall be reamed or drilled. Rivets shall be heated uniformly to a light "cherry red" color and shall be driven while hot. They shall not be overheated or burned. Rivet heads shall be full and symmetrical, concentric with the shank, and shall have full bearing all around. They shall not be smaller than the heads of the shop rivets. Rivets shall be tight and shall grip the connected parts securely together. Caulking or recupping will not be permitted. In removing rivets, the surrounding metal shall not be injured; if necessary, they shall be drilled out.

510.60 PIN CONNECTIONS

Pilot and driving nuts shall be used in driving pins. They shall be furnished by the Contractor without charge. Pins shall be so driven that the members will take full bearing on them. Pin nuts shall be screwed up tight and the threads burred at the face of the nut with a pointed tool.

510.61 MISFITS

The correction of minor misfits involving harmless amounts of reaming, cutting and chipping will be considered a legitimate part of the erection. However, any error in the shop fabrication or deformation resulting from handling and transportation which prevents the proper assembling and fitting-up of parts by the moderate use of drift pins or by a moderate amount of reaming and slight chipping or cutting, shall be reported immediately to the Inspector and his approval of the method of correction obtained. The correction shall be made in his presence. If the contract provides for complete fabrication and erection, the Contractor shall be responsible for all misfits, errors and injuries and shall make the necessary corrections and replacements. If the contract is for erection only, the Inspector, with the cooperation of the Contractor, shall keep a correct record of labor and materials used and the Contractor shall render within 30 days an itemized bill for the approval of the Engineer.

510.62 ORTHOTROPIC-DECK BRIDGES

(1) PROTECTION OF DECK PLATE AFTER SAND BLASTING

If sand blasting to a white metal, or an equivalent method, is used to prepare the deck plate to receive a wearing surface, a protective coating shall be applied to the plate immediately after cleaning.

(2) DIMENSIONAL TOLERANCE LIMITS

Dimensional tolerance limits for othotropic-deck bridge members shall be applied to each completed but unloaded member and shall be as specified in the AWS Specification referred to in Section 510.23 (1), except as superseded hereinafter. The deviation from detailed flatness, straightness or curvature at any point shall be the perpendicular distance from that point to a templet edge having the detailed straightness or curvature and which is in contact with the element at two other points. The term element as used herein, refers to individual panels, stiffeners, flanges or other pieces. The templet edge may have any length not exceeding the greatest dimension of the element being examined and, for any panel, not exceeding 1.5 times the least dimension of the boundaries of the element. The deviation shall be measured between adjacent points of contact of the templet edge with the element; the distance between these adjacent points of contact shall be used in the formulas to establish the tolerance limits for the segment being measured whenever this distance is less than the applicable dimension of the element specified for the formula.

(a) FLATNESS OF PANELS

The term panel as used in this Article means a clear area of steel plate surface bounded by stiffeners, webs, flanges or plate edges and not further subdivided by any such elements. The provisions of this Article apply to all panels in the bridge; for plates stiffened on one side only, such as orthotropic deck plates or flanges of box girders, this includes the total clear width on the side without stiffeners as well as the panels between stiffeners on the side with stiffeners.

The maximum deviation from detailed flatness or curvature of a panel shall not exceed the greater or:

$$5\text{mm or } \frac{D}{90\sqrt{T}} \qquad \left(3/16 \text{ inch or } \frac{D}{144\sqrt{T}}\right)$$

where

D = the least dimension along the boundary of the panel in cm. (in.).

T = the minimum thickness of the plate comprising the panel in cm. (in.).

(b) STRAIGHTNESS OF LONGITUDINAL STIFFENERS SUBJECT TO CALCULATED COMPRESSIVE STRESS, INCLUDING ORTHOTROPIC-DECK RIBS

The maximum deviation from detailed straightness or curvature in any direction perpendicular to its length of a longitudinal stiffener subject to calculated compressive stress, including each orthotropic-deck rib, shall not exceed:

$$\frac{L}{480}$$

where

L = the length of the stiffener or rib between cross-members, webs or flanges.

(c) STRAIGHTNESS OF TRANSVERSE WEB STIFFENERS AND OTHER STIFFENERS NOT SUBJECT TO CALCULATED COMPRESSIVE STRESS

The maximum deviation from detailed straightness or curvature in any direction perpendicular to its length of a transverse web stiffener or other stiffener not subject to calculated compressive stress shall not exceed:

$$\frac{L}{240}$$

where

L = the length of the stiffener between cross-members, webs or flanges.

510.63 REMOVAL OF OLD STRUCTURE AND FALSEWORK

If stipulated in the agreement, the Contractor shall dismantle the old structure which, unless otherwise provided, shall be the property of the HA, and shall store the material in the immediate vicinity of the bridge site, as the Engineer may direct. If the old structure is to be re-erected, it shall be dismantled without unnecessary damage and the parts match-marked and carefully stockpiled.

Upon completion of the erection and before final acceptance, the Contractor shall remove all falsework, excavated or useless materials, rubbish and temporary buildings, replace or renew any fences damaged, and restore in an acceptable manner all property, both public and private, which may have been damaged during the prosecution of this work, and shall leave the bridge site and adjacent highway in a neat and presentable condition satisfactory to the Engineer. All excavated material or falsework placed in the stream channel during construction shall be removed by the Contractor before final acceptance.

510.64 METHOD OF MEASUREMENT

The weight of the metal work to be paid for under the item of structural steel shall be computed on the following basis:

(a) Unit weights -	Grams/cm³	Lb cu ft.
Aluminum, cast or wrought	2.771	173.0
Bronze, cast	8.587	536.0
Copper alloy	8.587	536.0

Copper sheet	8.939	558.0
Iron, cast	7.129	445.0
Iron, malleable	7.529	470.0
Iron, wrought	7.802	487.0
Lead, sheet	11.326	707.0
Steel, rolled, cast, copper-bearing, silicon, nickel	7.850	490.0
Zinc	7.209	450.0

(b) The weights of rolled shapes shall be computed on the basis of their nominal weights per foot as shown on the drawings, or listed in the handbooks.

The weights of plates shall be computed on the basis of the nominal weight for their width and thickness as shown on the drawings, plus an estimated overrun computed as one-half the "Permissible Variation in Thickness and Weight" as tabulated in Specification, "General Requirements for Delivery of Rolled Steel Plates, Shapes, Steel Piling and Bars for Structural Use", AASHO M 160 (ASTM A 6).

(c) The weight of castings shall be computed from the dimensions shown on the approved shop drawings, deducting for open holes. To this weight shall be added 5 percent allowance for fillets and overrun. Scale weights may be substituted for computed weights in the case of castings or of small complex parts for which accurate computations of weight would be difficult.

(d) The weight of temporary erection bolts, boxes, crates and other containers used for shipping, and materials used for supporting members during transportation and erection shall not be included.

(e) In computing pay weight on the basis of computed net weight, the following stipulations in addition to those in paragraphs a, b, c and d above shall apply.

The weight shall be computed on the basis of the net-finished dimensions of the parts as shown on the approved shop drawing, deducting for copes, cuts, clips and all open holes, except rivet and bolt holes.

The weight of all rivet heads, both field and shop, shall be included on the basis of the following weights :

DIAMETER OF RIVET		WEIGHT PER 100 HEADS	
Millimeters	Inches	Kilograms	Pounds
12.7	1/2	1.8	4
15.9	5/8	3.2	7
19.1	3/4	5.4	12
22.2	7/8	8.2	18
25.4	1	11.8	26
28.6	1 1/8	16.3	36
31.8	1 1/4	21.8	48

The weight of heads, nuts, single washers and threaded stick-through of all high-tensile-strength shop bolts shall be included on the basis of the following weights :

DIAMETER OF BOLT		WEIGHT PER 100 BOLTS	
Millimeters	Inches	Kilograms	Pounds
12.7	1/2	8.9	19.7
15.9	5/8	14.4	31.7
19.1	3/4	23.8	52.4
22.2	7/8	36.5	80.4
25.4	1	53.0	116.7
28.6	1 1/8	74.9	165.1
31.6	1 1/4	96.2	212.0
34.9	1 3/8	127.0	280.0
38.1	1 1/2	154.2	340.0

The weight of weld metal shall be computed on the basis of the theoretical volume from dimensions of the welds.

(f) In computing pay weight on the basis of scale weights, the pay quantity of structural steel will be the shop scale weight of the fabricated members, which shall be weighed on satisfactory scales in the presence of the Inspector. If the shop paint has been applied to the completed member when weighed, 0.4 of 1 per-cent of the weight of the member shall be deducted from the scale weights to compensate for weight of shop paint. No payment will be made for any weight in excess of $1\frac{1}{2}$ per cent above the computed net weight of the whole item.

(g) Shop painting of steel will be measured for payment as 0.4 of 1 percent of the total weight of steel, as measured for payment as specified above.

510.65 BASIS OF PAYMENT

The contract price for fabrication and erection structural steel shall include all labor, materials, transportation and shop painting necessary for the proper completion of the work in accordance with the contract. The contract price for fabrication without erection shall include all labor and materials necessary for the proper completion of the work in accordance with the contract.

Under contracts containing an item for structural steel, all metal parts other than metal reinforcement for concrete, such as anchor bolts and nuts, shoes, rockers, rollers, bearing and slab plates, pins and nuts, expansion dams, roadway drains and scuppers, weld metal, bolts embedded in concrete, cradles and brackets, railing and railing posts, blast plates and water stops, shall be paid for as structural steel unless otherwise stipulated.

Payment will be made on a kilogram-price or a lump-sum basis as required by the terms of the contract, but, unless stipulated otherwise, it shall be on a kilogram-price basis.

The payment in kilogram-price contracts shall be based on the computed net weight of metal in the fabricated and erected structures unless it is provided that payment shall be based on scale weight.

For members comprising both carbon steel and other special steel or material, when separate unit prices are provided for same, the weight of each class of steel in each such member shall be separately computed, and paid for at the contract unit price therefor.

Full-size members which are tested in accordance with the Specifications, when such tests are required by the contract, shall be paid for at the same rate as for comparable members for the structure. Members which fail to meet the contract requirements, and members rejected as a result of tests, shall not be paid for by the purchaser.

SECTION 511 BRONZE OR COPPER-ALLOY BEARING AND EXPANSION PLATES

511.01 GENERAL

Plates shall be of the kind of metal specified in the Special Provisions or as shown on the Plans.

511.02 MATERIALS

(1) BRONZE BEARING AND EXPANSION PLATES

Bronze-bearing and expansion plates shall conform to the Specification for Bronze Castings for Bridges and Turntables, AASHO M 107 (ASTM B 22). Alloy B shall be furnished unless otherwise specified.

(2) ROLLED COPPER-ALLOY BEARINGS AND EXPANSION PLATES

Rolled copper-alloy bearing and expansion plates shall conform to the Specification for Rolled Copper-Alloy Bearing and Expansion Plates and Sheets for Bridge and Other Structural Uses, AASHO M 108 (ASTM B 100). Alloy No.1 shall be furnished unless otherwise specified.

(3) METAL POWDER-SINTERED BEARINGS AND EXPANSION PLATES (OIL IMPREGNATED)

Metal powder—sintered bearings and oil impregnated expansion plates shall conform to the Specifications for such material of the ASTM B 438, Grade 1, Type II, or Grade 2, Type 1.

511.03 BRONZE PLATES

Plates shall be cast according to details shown on the Plans. Sliding surfaces shall be planed parallel to the movement of the spans and polished unless detailed otherwise.

511.04 COPPER-ALLOY PLATES

Plates shall be furnished according to details shown on the Plans Finishing of the rolled plates will not be required provided they have a plane, true and smooth surface.

511.05 PLACING

Bearing plates shall be accurately set in correct position as shown on the Plans and shall have a uniform bearing over the whole area. Provision shall be made to keep the plates in correct position as the concrete is being placed.

511.06 METHOD OF MEASUREMENT

The metal work to be measured for payment under the item of bronze or copper-alloy bearing and expansion plates shall be the certified shop-scale weight of the plates as placed in the structure, unless otherwise provided. If specified in the contract or permitted by the Engineer, computed weights obtained as herein described may be made the basis of measurement.

511.07 BASIS OF PAYMENT

Payment for bronze or copper-alloy bearing and expansion plates shall be made at the contract unit price per kilogram. Payment shall include the furnishing of material and all labor and incidental work that are required to complete the item.

SECTION 512. STEEL-GRID FLOORING

512.01 GENERAL

Steel-grid flooring shall be of the open-type, or the concrete-filled type as specified in the Special Provisions or as shown on the Plans.

The floor shall meet the requirements for the design of steel grid floors: Article 1.3.6 in the Standard Specifications. Before fabrication or construction is undertaken, the Contractor shall submit complete shop and assembly details to the Engineer for approval.

512.02 MATERIALS

(1) STEEL

All steel shall conform to the Specification for Structural Steel of the AASHO M 183 (ASTM A 36), AASHO M 161 (ASTM A 242) of a weldable grade, or AASHO M 188 (ASTM A 441). Unless the material is galvanized it shall have a copper content of 0.2 percent.

(2) PROTECTIVE TREATMENT (SHOP COAT)

Open-type floors shall be galvanized in accordance with the Specification for Zinc (Hot-Galvanized) Coatings on Products Fabricated from Rolled, Pressed and Forged Steel Shapes, Plates, Bars and Strip, AASHO M 111 (ASTM A 123).

In lieu of galvanizing, the floor may be painted if specified in the Special Provisions. The paint shall be applied according to the Specifications for Painting Metal Structures, except that dipping will be permitted. The paint shall be as specified for metal structures unless paint of other type is required by the Special Provisions.

(3) CONCRETE

All concrete in filled steel-grid floors shall conform to the Specification for concrete, Section 504. The concrete and the size of aggregate shall be as specified for Class Y concrete.

(4) SKID RESISTANCE

The upper edges of all members forming the wearing surface of an open-type grid flooring should be fabricated or treated to give the maximum skid resistance.

512.03 ARRANGEMENT OF SECTIONS

Where the main elements are normal to centerline of roadway, the units generally shall be of such length as to extend over the full width of the roadway for roadways up to 12 meters (approximately 40 feet), but in every case the units shall extend over at least three panels. Where joints are required, the ends of the main floor members shall be welded at the joints over their full cross-sectional area, or otherwise connected to provide full continuity.

Where the main elements are parallel to centerline of roadway, the sections shall extend over not less than three panels, and the ends of abutting units shall be welded over their full cross-sectional area, or otherwise connected to provide full continuity in accordance with the design.

512.04 PROVISION FOR CAMBER

Unless otherwise provided on the Plans, provision for camber shall be made as follows:

Steel units so rigid that they will not readily follow the camber required shall be cambered in the shop. To provide a bearing surface parallel to the crown of the roadway,

the stringers shall be canted or provided with shop-welded, beveled bearing bars. If beveled bars are used, they shall be placed along the centerline of the stringer flange, in which case the design span length shall be governed by the width of the bearing bar instead of by the width of the stringer flange.

Longitudinal stringers shall be mill-cambered or provided with bearing strips so that the completed floor after dead-load deflection shall conform to the longitudinal camber shown on the Plans.

512.05 FIELD ASSEMBLY

Areas of considerable size shall be assembled before the floor is welded to its supports. The main elements shall be made continuous and sections shall be connected together along their edges by welding, bolting or riveting. The connections shall meet with the approval of the Engineer. The rivets may be cold-driven.

512.06 CONNECTION TO SUPPORTS

The floor shall be connected to its steel supports by welding. Before any welding is done the floor shall either be loaded to make a tight joint with full bearing or it shall be clamped down. The location, length and size of the welds shall be subject to the approval of the Engineer, but in no case shall they be less than the manufacturer's standards.

The ends of all the main steel members of the slab shall be securely fastened together at the sides of the roadway for the full length of the span by means of steel plates or angles welded to the ends of the main members, or by thoroughly encasing the ends with concrete.

512.07 WELDING

All shop and field welding shall be done in accordance

with the current Specifications of the American Welding Society for Welding Highway and Railway Bridges, unless these Specifications conflict with the AWS Specifications, in which case these Specifications shall govern.

Surfaces to be welded shall be free from paint, grease, loose scale, rust and other material that will prevent a proper weld. A thin coating of linseed oil, without pigment, need not be removed. Any clinkers or slag caused by flame-cutting or other causes shall be removed before welding.

512.08 REPAIRING DAMAGED GALVANIZED COATINGS

All galvanizing that has been chipped off or damaged in handling or transporting, or in welding or riveting, shall be repaired by field-galvanizing by the application of a paste composed of approved zinc powder and flux with a minimum amount of water. The places to be coated shall be thoroughly cleaned, including removal of slag on welds, before the paste is applied. The surface to be coated shall first be heated with a torch to a sufficient temperature so that all metallics in the paste are melted when applied to the heated surface. Extreme care shall be taken to see that the galvanized surfaces are not damaged by the torch. The flux in the paste will cause a black substance to appear on the surface of the coated parts, and this black substance shall be removed by wiping off with waste or by the quick application of cold water.

512.09 CONCRETE FILLER

Floor-types with bottom flanges not in contact with each other shall be provided with bottom forms of metal or wood to retain the concrete filler without excessive leakage.

If metal form strips are used, they shall fit tightly on the

bottom flanges of the floor members and be placed in short lengths so as to extend only about 2.5cm (1 inch) onto the edge of each support; but in all cases the forms shall be such as will result in adequate bearing of slab on the support.

The concrete shall be mixed, placed and cured in accordance with the requirements of Section 504. The concrete shall be thoroughly compacted by vibrating the steel-grid floor. The vibrating device and the manner of operating it shall be subject to the approval of the Engineer.

512.10 PAINTING

Flooring furnished without galvanizing, but with a shop coat of paint, shall be given two field coats of paint in accordance with the requirements of Section 514.

If a structural steel plate is used on the bottom of a filled-type floor, the bottom surface of the plate shall be painted one shop coat and two field coats of paint.

512.11 METHOD OF MEASUREMENT

The quantity to be measured for payment shall be the number of square meters of steel-grid flooring complete in place and in accordance with these Specifications.

512.12 BASIS OF PAYMENT

The quantity of steel-grid flooring, measured as specified above, will be paid for at the contract unit price per square meter, which price shall be full compensation for performing the work specified to include painting and concrete when required, and the furnishing of all labor, tools, material, equipment and incidentals to complete the work.

SECTION 513 RAILINGS

513.01 GENERAL

Railings for bridges shall include all work constructed above the top of sidewalk, top of curb more than 15cm (6 inches) wide or, if a sidewalk or curb is not used, above the top of the roadway. Railings for wing-walls or retaining walls shall include all work above the top of wall, or if used, top of curb or top of sidewalk. The item shall include the furnishing of all material, equipment, tools, supplies and labor necessary for the proper construction of the railing, as shown on the Plans or as provided in the Special Provisions. Payment will be as shown on the Plans or in the Special Provisions.

513.02 MATERIALS

All materials shall conform to the requirements of the applicable AASHO Material Specifications, the Plans or the Special Provisions.

513.03 LINE AND GRADE

The line and grade of the railing shall be true to that shown on the Plans, and shall not follow any unevenness in the superstructure. Unless otherwise specified or shown on the Plans, the handrail and curbs on bridges, whether superelevated or not, shall be vertical.

513.04 VACANT

513.05 VACANT

CONCRETE RAILING

513.06 GENERAL

In no case shall concrete railings be placed until the

centering or falsework for the span has been released, rendering the span self-supporting.

513.07 MATERIALS

Except as modified herein, materials shall conform to the requirements of Section 504 and 505.

513.08 RAILINGS CAST-IN-PLACE

The portion of the railing or parapet which is to be cast in place shall be constructed in accordance with the requirements of Section 504. Care shall be exercised to secure smooth and tight-fitting forms which can be rigidly held in line and grade and removed without injury to the concrete.

Forms shall be either single-width boards or lined with material that is approved by the Engineer. Form joints in plane surfaces will not be permitted.

Moldings, panel work and bevel strips shall be constructed according to the detail Plans with neatly mitered joints; and all corners in the finished work shall be true, sharp and clean-cut and shall be free from cracks, spalls or other defects.

513.09 PRECAST RAILS

Moist-tamped mortar, precast members shall be made of a mixture of cement and sand approximately in the proportions of one part of cement to two and one-half parts of sand. The sand shall be specially selected for color and grading. The sand shall be screened through a screen having 3mm (1/8 inch) square meshes, and all oversize particles shall be discarded. Only sufficient water shall be used in mixing to permit the immediate removal of the member from the mold.

The precast members shall be cast in mortar-tight metal or metal-lined molds. The precast members shall be removed from the molds as soon as practicable and shall be kept damp

for a period of at least 10 days. During this period they shall be protected from the sun and weather. The method of storage and handling shall be such as to preserve true and even edges and corners, and any precast members which become chipped, marred or cracked before or during the process of placing shall be repaired.

513.10 COMBINATION RAIL

A combination of reinforced, cast-in-place rail posts and reinforced, precast rail bars shall be in accordance with the requirements of Sections 504 and 505, and the details as shown on the Plans.

513.11 SURFACE FINISH

The surfaces of railings shall conform to the requirements of Section 504.

513.12 EXPANSION JOINTS

Expansion joints shall be so constructed as to permit freedom of movement. Upon completion of work, any mortar likely to spall under movement shall be carefully removed from the joints.

513.13 METHOD OF MEASUREMENT

The quantity of railing to be measured for payment shall be the number of linear meters of the type of rail specified complete in place. Measurement will be made along the face of rail from end to end.

513.14 BASIS OF PAYMENT

The linear meters of railing, determined as provided above, will be paid for at the contract unit price per linear meter for the type of railing specified, complete in place. The contract price shall include all labor, tools, materials and other items incidental to the satisfactory completion of the work.

SECTION 514 PAINTING METAL STRUCTURES

514.01 GENERAL

The painting of metal structures shall include, unless otherwise provided in the contract, the preparation of the metal surfaces, the application, protection and drying of the paint coatings, and the supplying of labor and materials necessary for the work.

514.02 MATERIAL

(1) SHOP COAT (PRIME COAT)

The shop or prime coat of paint for metal shall be a red lead paint and shall conform to the Specification for Red Lead Ready-Mixed Paint M 72.

Red lead pigment in the dry form or as a paste in oil shall conform to ASTM D 83. The 97% grade shall be specified for dry pigment.

In mixing the paint, raw linseed oil (ASTM D 234) may be replaced with boiled linseed oil (ASTM D 260) to the extent of 50% of the total oil content.

The paint, preferably, shall be factory-mixed. As an alternative the pigment shall be furnished in the form of red lead paste.

(2) FIRST FIELD COAT

The first field coat shall be a red lead paint as specified for the shop coat, tinted light brown as required with lamp black in an amount not to exceed 30 gms per liter ($\frac{1}{4}$ pound per gallon) of linseed oil.

(3) SECOND FIELD COAT (FINISH COAT)

The paint to be used for the second field coat shall

conform, unless specified otherwise, to one of the following AASHO Specifications :

(a) Foliage Green Bridge Paint, M 67.

(b) Black Bridge Paint, M 68.

(c) Aluminum Paint (Paste-Mixing Vehicle), M 69.

(d) White and Tinted Ready-Mixed Paint (Lead and Zinc Base), M 70.

(e) Red Lead (Dry and Paste-in-Oil) and Paint Made Therefrom, M 71.

(f) Red Lead Ready-Mixed Paint, M 72.

If red lead is used for the second field coat, it shall be tinted with lampblack as directed by the Engineer.

514.03 NUMBER OF COATS AND COLOR

Steel shall be painted one shop or prime coat and with not less than two field coats, as specified in Section 514.02. The color shall be as specified or determined by the Engineer. Coats shall be different in color to permit detection of incomplete application.

514.04 MIXING OF PAINT

Paint shall be factory-mixed except as provided in this Section. All paint shall also be field-mixed before applying, in order to keep the pigments in uniform suspension.

514.05 WEATHER CONDITIONS

Paint shall not be applied when the steel is damp, the air is misty, or when, in the opinion of the Engineer, conditions are otherwise unsatisfactory for the work.

Material painted under cover in damp or cold weather shall remain under cover until dry or until weather conditions permit

its exposure in the open. Painting shall not be done when the metal is hot enough to cause the paint to blister and produce a porous paint film.

514.06 APPLICATION

(1) GENERAL

Painting shall be done in a neat manner and may be applied with hand brushes or by spraying, except that aluminum paint preferably shall be applied by spraying. By either method the coating of paint applied shall be smoothly and uniformly spread so that no excess paint will collect at any point.

(2) BRUSHING

When brushes are used, the paint shall be so manipulated under the brush as to produce a smooth, uniform, even coating in close contact with the metal or with previously applied paint, and shall be worked into all corners and crevices.

(3) SPRAYING

Power-spraying equipment shall apply the paint in a fine, even spray without the addition of any thinner.

Paint when applied with spray equipment shall be immediately followed by brushing when necessary to secure uniform coverage and to eliminate wrinkling, blistering and airholes.

(4) INACCESSIBLE SURFACES

On all surfaces which are inaccessible for paint brushes, the paint shall be applied by spraying or applied with sheepskin daubers, to insure thorough covering.

514.07 REMOVAL OF PAINT

If the painting is unsatisfactory to the Engineer, the paint shall be removed and the metal thoroughly cleaned and repainted.

514.08 THINNING PAINT

Paint as delivered in containers when thoroughly mixed is ready for use. If it is necessary in cool weather to thin the paint in order that it shall spread more freely, this shall be done only by heating in hot water, and liquid shall not be added nor removed unless permitted by the Engineer.

514.09 PAINTING GALVANIZED SURFACES

Galvanized surfaces which are required to be painted shall be treated as follows :

For the purpose of conditioning the surface of galvanized surfaces for painting, the painting shall be deferred as long as possible in order that the surface may weather.

Before painting galvanized surfaces, they shall be treated as follows :

In 4 liters (1 gallon) of soft water, dissolve 55 grams (2 ounces) each of copper chloride, copper nitrate and sal ammoniac; then add 60ml (2 ounces) of commerical muriatic acid. This should be done in an earthen or glass vessel, never in tin or other metal receptacle. Apply the solution with a wide, flat brush to the galvanized surface, after which it will assume a dark, almost black, color which, on drying, becomes a grayish film.

514.10 CLEANING OF SURFACES

(1) GENERAL

Surfaces of metal to be painted shall be thoroughly cleaned, removing rust, loose mill scale, dirt, oil or grease.

Weld areas shall be neutralized with a proper chemical, after which they shall be thoroughly rinsed with water.

The removal of rust, scale and dirt shall be done by the use of metal brushes, scrapers, chisels, hammers or other effective means. Oil and grease shall be removed by the use of a suitable effective solvent. Bristle or wood fiber brushes shall be used for removing loose dust.

514.11 SHOP PAINTING

Unless otherwise specified, before shipping, steelwork shall be given one coat of approved paint after it has been accepted by the Inspector.

Surfaces not in contact but inaccessible after assembly or erection shall be painted three coats. The shop contact surfaces shall not be painted. Field contact surfaces shall receive a shop coat of paint, except contact surfaces of high-strength bolted, friction-type joints, and main splices for chords of trusses and large girder splices involving multiple thicknesses of material where a shop coat of paint would make erection difficult. Field contact surfaces not painted with the shop coat shall be given a coat of approved lacquer or other protective coating if it is expected that there will be a prolonged period of exposure before erection.

Surfaces which will be in contact with concrete shall not be painted.

With the exception of abutting joints and base plates, machine-finished surfaces shall be coated, as soon as practicable after being accepted, with a hot mixture of white lead and tallow or other approved coating before removal from the shop.

Structural steel which is to be welded shall not be painted before welding. Steel which is to be field-welded shall be

given one coat of boiled linseed oil or other approved protective coating after shop welding and shop fabrication are completed.

Erection marks for the field identification of members and weight marks shall be painted upon surface areas previously painted with the shop coat. Material shall not be loaded for shipment until it is thoroughly dry, and in any case not less than 24 hours after the paint has been applied.

514.12 FIELD PAINTING

When the erection is complete, all rust, dirt and grease shall be removed as specified under Section 514.10.

As soon as the Inspector has approved all field rivets, bolts and field welds, these surfaces shall be cleaned and thoroughly covered with one coat of shop-coat paint. Any surface from which the shop coat of paint has become worn off or has otherwise become defective shall also be cleaned and painted as above.

Contact surfaces to be bolted and surfaces which will be in contact with concrete shall not be painted. Surfaces which will be inaccessible after erection shall be painted with such field coats as are called for on Plans or authorized. When the paint applied for retouching the shop coat has thoroughly dried and the field cleaning has been satisfactorily completed, such field coats as are called for on the Plans or are authorized shall be applied. In no case shall a succeeding coat be applied until the previous coat has dried throughout the full thickness of the paint film. All small cracks and cavities which were not sealed in a watertight manner by the first field coat shall be filled with a pasty mixture of red lead and linseed oil before the second coat is applied.

If, in the opinion of the Engineer, traffic produces an

objectionable amount of dust, the Contractor shall, at his own expense, allay the dust for the necessary distance on each side of the bridge and take any other precautions necessary to prevent dust and dirt from coming in contact with freshly painted surfaces or with surfaces before the paint is applied.

The application of the second field coat shall be deferred until adjoining concrete work has been placed and finished. If concreting operations have damaged the paint, the surface shall be recleaned and repainted.

The Contractor shall protect all portions of the bridge superstructure and substructure against disfigurement by spatters of paint materials.

514.13 METHOD OF MEASUREMENT

The quantity to be measured for payment shall be on a unit basis for field-painting each structure or structural unit, as indicated on the Plans or specified in the contract. Field-painting consists of two coats of paint unless specified otherwise.

514.14 BASIS OF PAYMENT

Painting will be paid for at the contract lump-sum price for each structure or structural unit, which lump sum shall be full compensation for furnishing, transporting, handling and applying the material specified and the furnishing of all labor, tools, equipment, cleaning materials, scaffolds, rigging and incidentals necessary to complete the work.

The cost of cleaning, touching up of the shop coat and preparation of surfaces will not be paid for directly but shall be considered as included in the lump-sum bid for painting.

Shop cleaning and shop painting will be paid for under Section 510-STEEL STRUCTURES.

Dust control will not be paid for directly, but shall be considered incidental to the painting of the structure or structural unit.

SECTION 515 PROTECTION OF EMBANKMENTS AND SLOPES

515.01 GENERAL

This work consists of furnishing and placing a protective covering of erosion-resistant material for riprap as slope or pier foundation protection. The work shall be done in reasonably close conformity to the Plans and Specifications.

The areas to receive riprap or slope protection of any kind shall be dressed smooth to the slopes or shapes called for on the Plans and shall be free from stumps, organic matter or waste material. Generally, a toe trench should be provided in which to key the bottom course of riprap. A filter blanket should be provided where it is anticipated that there may be migration of fines through the riprap. These items shall be shown on the Plans or called for in the Project Specifications.

All material, regardless of type or kind, shall be placed reasonably close to the lines called for on the Plans.

515.02 MATERIALS

All stone, regardless of use, shall be clean (free from organic matter) durable, angular with fractured faces, nearly rectangular in shape with a breadth or thickness at least one-third its length, and have a gradation dependent upon maximum size as determined by the Engineer.

Project Plans or Specifications will state size and quality requirements of stone to be used for the various classes of work. Sizes shown in the following table are recognized by these Specifications.

MINIMUM PERCENTAGE LARGER THAN

ROCK SIZE METRIC	ROCK SIZE U.S. STD.	CLASS OF STONE 8 TON	4 TON	2 TON	1 TON	1/2 TON	1/4 TON	LIGHT	FACING	FILTER MATERIAL Nº 1	Nº 2
8 Ton	8 Ton	50	0								
4 Ton	4 Ton	95	50	0							
2 Ton	2 Ton	-	95	50	0						
1 Ton	1 Ton	-	-	95	50	0					
1/2 Ton	1/2 Ton	-	-	-	95	50	0				
1/4 Ton	1/4 Ton	-	-	-	-	95	50	0			
90 Kg	200 lb	-	-	-	-	-	-	50	0		
35 Kg	75 lb	-	-	-	-	-	90	-	50		
2 Kg	5 lb	-	-	-	-	-	-	90	90	0	
4.75mm	Nº 4	-	-	-	-	-	-	-	-	50	0
0.075mm	Nº 200	-	-	-	-	-	-	-	-	95	90

The table above sets out minimum requirements for the large stone per class. It is understood that the Contractor will furnish material well-graded with smaller stones, to the extent that a homogenous blanket of riprap will result with all interstices reasonably well-filled with rock. Quality requirements for rock to be furnished under these Specifications shall be checked prior to use, by the stipulated tests and at appropriate times throughout the life of the Project as determined by the Engineer.

515.03 LOOSE RIPRAP FOR SLOPES

Stone for riprap shall be placed on the prepared or natural slope in a manner which will produce a reasonably well-graded mass of stone with the minimum practicable percentage of voids, and shall be constructed to the lines, grades and thicknesses shown on the drawing, or as directed. Riprap protection shall be placed to its full-course thickness at one operation and in such a manner as to avoid displacing the underlying material. Placing of riprap protection in layers or by dumping into chutes, or by similar methods likely to cause segregation will not be permitted. The larger stone shall be well distributed and the entire mass of stones shall be roughly graded to conform to approximate gradation specified in Section 515.02. All material going into riprap protection shall be so placed and distributed that there will be no large accumulations or areas composed largely of either the larger or smaller sizes of stone. It is the intent of the Specifications to produce a fairly compact riprap protection in which all sizes of material are placed in their proper proportions. Hand-placing or rearranging of individual stone by mechanical equipment may be required to the extent necessary to secure the results specified above. A tolerance of plus or minus 20cm (8 inches) from the thicknesses shown on the drawing will be allowed in the finished surface of the riprap protection, except that either extreme

of such tolerance shall not be continuous over an area greater than 20 square meters (200 square feet). The tolerance limit will be determined on the basis of the average surface elevation within 0.25 square meters (3 square feet). The desired distribution of the various sizes of stone throughout the mass may be obtained, at the option of the Contractor, either by selective loading at the quarry, or controlled dumping of successive loads during placing, or by a combination of these methods. Unless otherwise authorized by the Engineer, the riprap protection shall be placed in conjunction with the construction of the embankment with only sufficient lag in construction of the riprap protection as may be necessary to prevent mixture of embankment and riprap material.

515.04 MORTAR RIPRAP FOR SLOPES

Stone for this purpose shall, as far as practicable, be selected as to size and shape in order to secure fairly large, flat-surfaced stone which will lay up with a true and even surface and a minimum of voids. These stones shall be placed first and roughly arranged in close contact, the largest stones being placed near the base of the slope. The spaces between the larger stones shall be filled with stones of suitable size, leaving the surface smooth, reasonably tight and conforming to the contour required. In general, the stone shall be laid with a degree of care that will insure for plane surfaces a maximum variation from a true plane of not more than 3cm in 1 meter ($1\frac{1}{2}$ inches in 4 feet). Warped and curved surfaces shall have the same general degree of accuracy as specified above for plane surfaces.

As each of the larger stones is placed, it shall be surrounded by fresh mortar, and adjacent stones shall be shoved into contact. After the larger stones are in place, all of the spaces or openings between them shall be filled with mortar and the smaller stones then placed by shoving them into position, forcing

excess mortar to the surface and insuring that each stone is carefully and firmly bedded laterally.

After the work has been completed as above described, excess mortar forced up shall be spread uniformly to completely fill all surface voids. All surface joints shall then be roughly pointed up either with flush joints or with shallow, smooth-raked joints.

Weep holes shall be provided through the riprap cover as shown on the Plans or as directed by the Engineer.

Mortar shall consist of one part cement complying with Section 504.02 (1) (a) and three parts sand complying with Section 504.02 (3) (b), thoroughly mixed with water to have a thick, creamy consistency. During hot, dry weather the work shall be protected from the sun and kept moist for a minimum of three days after placement.

Rock shall be kept wet during placing of the mortar.

515.05 STONE RIPRAP FOR FOUNDATION PROTECTION

Stone shall be placed as nearly as is practical to the locations and areas called for on the Plans.

When placed under water, free dumping will not be permitted without written permission of the Engineer. Placement shall be by controlled methods using bottom-dump buckets, or wire-rope baskets lowered through the water to the point of placement.

515.06 CONCRETE RIPRAP IN BAGS

In general, this type material shall be used only where it can be placed in the dry.

Concrete for riprap in bags shall be Class "C" concrete complying with Section 504.05.

Heavy burlap bags, 244 grams per square meter (10 oz), about 50cm × 90cm (20" × 36") inside seams are preferred.

If sacks of larger sizes are used, the ends shall be folded to secure close contact with adjacent bags and to contain approximately 20 liters (2/3 cu. ft.) of concrete.

The bags shall be securely tied or folded over and immediately placed in the work. If bags are folded, the fold shall be placed underneath the bag for headers and against the previously placed bag for stretchers. Each course shall be thoroughly tamped into place so that close contact with underlying and adjacent bags is obtained. No more than four horizontal courses shall be laid above concrete not yet having its initial set. At the start of each day's work, previously placed sacks shall be moistened and dusted heavily with cement.

Weep holes shall be provided through the riprap cover, as shown on the Plans or as directed by the Engineer.

515.07 CONCRETE SLAB RIPRAP

(1) GENERAL

Concrete slab riprap may be either cast-in-place slabs or precast slabs manufactured on the job or at a regular masonry-unit manufacturing plant. If reinforcement is required, it shall be furnished and placed as shown on the Plans. All blocks shall be of the limiting dimensions shown on the Plans.

(2) MANUFACTURE

Cast-in-place slabs or precast slabs manufactured on the job shall be made of Class "A" concrete complying with the requirements of Section 504, except that the minimum compressive strength of the concrete shall be 125 kgs per square cm (1,800 pounds per square inch). All edges shall be tooled and the exposed surfaces shall be a wood-float and fiber-brush finish.

Plant-manufactured slabs shall be uniform in texture, with true sharp edges. Tooling of edges and brush finish will not be required. Plant-manufactured blocks shall comply with ASTM Specification C 145, for grade U-II units.

Either conventional aggregate complying with Section 504.02 (3) (a) and 504.02 (4) (a), or lightweight aggregate complying with ASTM C 330 may be used in manufacture of the blocks.

(3) PLACING

A trench of the dimensions shown on the Plans or as given by the Engineer shall be dug at the toe of the slope, and the slope shall be dressed to the lines and grades given by the Engineer. Excess material removed in dressing slopes shall be used in filling low areas, and any excess not required for this purpose shall be spread on adjacent highway slopes as directed by the Engineer. Filled areas shall be compacted. Placing imported material will be considered a part of the work of dressing the slopes. The riprap shall be placed in blocks of the dimensions shown on the Plans.. Unless otherwise specified, blocks shall be laid in horizontal courses and successive courses shall break joints with proceding courses. Joint details shall be as shown on the Plans, but if not shown, horizontal joints and joints up the slope in either type construction shall be 2 cm (3/4"), filled with 1 to 3 grout and raked 2 cm (3/4").

Weep holes shall be provided through the riprap cover as shown on the Plans or as directed by the Engineer.

The Contractor shall maintain the riprap protection as may be necessary to prevent mixture of embankment and riprap material. The Contractor shall maintain the riprap

protection until accepted, and any material displaced by any cause shall be replaced at no additional cost to the HA to the lines and grades shown on the drawing.

515.08 FILTER OR BEDDING MATERIAL

Pit or quarry-run material of the size specified and complying with Section 515.02 will be acceptable.

Stone shall be placed as nearly as is practical to the locations and areas called for on the Plans.

When placed under water, free dumping will not be permitted without written permission of the Engineer. Placement shall be by controlled methods, using bottom-dump buckets or wire-rope baskets lowered through the water to the point of placement.

515.09 METHOD OF MEASUREMENT

(1) LOOSE RIPRAP FOR SLOPES

Loose riprap for slopes may be measured for payment on either a square-meter, cubic-meter or weight basis as specified. If measured on a square-meter basis, the quantity measured will be that actually placed to the limitina dimensions shown on the Plans or as the Plan dimensions may be revised by the Engineer.

(2) MORTAR RIPRAP FOR SLOPES

Mortar riprap for slopes will be measured for payment on a square-meter basis. The quantity measured will be that actually placed to the limiting dimensions shown on the plans or as the plan dimensions may be revised by the Engineer.

(3) STONE RIPRAP FOR FOUNDATION PROTECTION

Unless otherwise specified, stone riprap will be measured

for payment on a weight (ton) basis. Weighing shall be done in the presence of an Inspector in the hauling vehicles, either at the quarry or at or near the point of placement as may be directed by the Engineer. The quantity measured for payment will be that actually placed in accordance with instruction given by the Engineer.

(4) CONCRETE RIPRAP IN BAGS

Unless otherwise specified, concrete riprap in bags will be measured for payment on a volume (cubic-meter) basis. The quantity measured will be that actually placed to the limiting dimensions shown on the Plans or as the Plan dimensions may be revised by the Engineer.

(5) CONCRETE SLAB RIPRAP

Preparation of slopes will be measured for payment on a square meter unit. The quantity measured will be that actually prepared for coverage by riprap as required by Plan dimensions or as Plan dimensions may be revised by the Engineer. Excavated area for the trenches or curbs, if required, will be included in these limiting dimensions.

Concrete slab riprap will be measured for payment on a square-meter unit. The quantity measured will be that actually placed within the limiting dimensions called for on the Plans, or as Plan dimensions may be revised by the Engineer. Curbing, if required, will be included in these limiting dimensions.

(6) FILTER OR BEDDING MATERIAL

Filter or bedding material will be measured for payment on a cubic-meter, square-meter or weight basis as called for in the Project Specifications. The quantity measured will

be that actually placed to the limiting dimensions shown on the Plans, or as the Plan dimensions may be revised by the Engineer. Measurements on a square-meter basis shall be measured parallel to the finished surface.

515.10 BASIS OF PAYMENT

(1) LOOSE RIPRAP FOR SLOPES

Loose riprap for slopes measured in accordance with Section 515.09 (1) will be paid for at the price bid per square meter, per cubic meter or per ton, as set forth in the Project Specifications.

(2) MORTAR RIPRAP FOR SLOPES

Mortar riprap for slopes measured in accordance with Section 515.09 (2) will be paid for at the price bid per square meter.

(3) STONE RIPRAP FOR FOUNDATION PROTECTION

Stone riprap for foundation protection measured in accordance with Section 515.09 (3) will be paid for at the price bid per ton, unless otherwise specified.

(4) CONCRETE RIPRAP IN BAGS

Concrete riprap in bags measured in accordance with Section 515.09 (4) will be paid for at the price bid per cubic meter, unless otherwise specified.

(5) CONCRETE-SLAB RIPRAP

Payment for preparation of slopes will be made at the unit price bid per square meter, which price and payment shall be full compensation for furnishing and placing all materials, including labor, tools, equipment and incidentals

necessary to complete preparation of the area to be covered, including excavation and backfill of toe trenches and curbs if required.

Payment for concrete-slab riprap will be at the unit price bid per square meter therefor, which price and payment shall be full compensation for furnishing all materials, including labor, equipment, tools and incidentals necessary to complete the work.

(6) FILTER OR BEDDING MATERIAL

Filter or bedding material measured in accordance with Section 515.09 (6) will be paid for on the cubic-meter, square-meter or weight basis, as called for in the Project Specifications.

(7) GENERAL

Payment for riprap of the various classes at the unit prices bid will include full and complete compensation for all labor, materials, equipment or other incidental expense in connection with preparation of subgrade, excavating and backfilling toe trenches where required, furnishing and placing the stone, slabs, grout, mortar, reinforcing steel, if required, and all other work and incidental material required to complete the work in accordance with the Plans and Specifications.

SECTION 516 CONCRETE CRIBBING

516.01 GENERAL

The construction of concrete cribbing shall consist of the furnishing and installation of reinforced concrete crib members and the placing of the interior filling materials. The crib members shall be cast in the proportions and in conformance with the general requirements set forth for precast concrete bearing piles. Dowels, where used, shall be of wrought iron or galvanized steel not less than 25mm (1 inch) in diameter and of the required length.

Casings for dowels shall be of galvanized steel or iron pipe not less than 3.2cm ($1\frac{1}{4}$ inches) in diameter.

The details of the crib members and their arrangement shall be as shown on the Plans. If specific details for reinforcement are not shown on the Plans, or if the Contractor is permitted to purchase the crib members from manufacturers, he shall submit detailed Specifications and Plans for the approval of the Engineer, and such Plans must be approved before delivery of the material is begun.

All members shall be free from depressions and spalled, patched or plastered surfaces or edges, or any other defects which may impair their strength or durability. Cracked or otherwise defective members will be rejected.

516.02 CONSTRUCTION

The foundation or bed for the cribbing shall be firm and shall be approved by the Engineer before any of the crib work is placed. In general, transverse-concrete sill members shall be used to support the lower cribbing course. Crib members

shall be carefully handled and erected in such manner as to avoid any injury due to shock or impact. Each member shall be secured by approved interlocking details or by means of dowels passing through galvanized or iron casings. Any members which become cracked or otherwise injured during erection shall be completely renewed and replaced.

The filling for the interior of the crib shall progress simultaneously with the erection of the cribbing, and shall be of approved material placed in layers not to exceed 30cm (12 inches) in thickness and tamped or consolidated to the satisfaction of the Engineer.

516.03 METHOD OF MEASUREMENT

The quantity of concrete cribbing to be measured for payment shall be the number of cubic meters for the net volume of concrete in the crib members, as shown on the Plans.

The quantity of fill material for the interior of the crib to be measured for payment shall be the number of cubic meters of material complete and in place.

516.04 BASIS OF PAYMENT

Concrete cribbing will be paid for at the contract unit price per cubic meter, complete in place, and shall include all materials, equipment, tools and labor, including any necessary excavation to complete the work.

Fill material will be paid for at the contract unit price per cubic meter for crib filling complete and in place.

SECTION 517 WATERPROOFING

517.01 GENERAL

When specified on the Plans in the Special Provisions, surfaces shall be waterproofed as specified herein.

517.02 MATERIALS

(1) MORTAR

Mortar for the protective course shall conform to the provisions of Section 506.02 (B).

(2) ASPHALT

Waterproofing asphalt shall conform to the Specification for Asphalt for Dampproofing and Waterproofing, AASHO M 115 ASTM D 449). NOTE: Type A is for use below ground and Type B for use above ground. Unless otherwise specified, Tyba B shall be used.

Primer for use with asphalt in waterproofing shall conform to the Specification for Primer for Use With Asphalt in Dampproofing and Waterproofing, AASHO M 116.

(3) PITCH

Waterproofing pitch shall conform to the Specification for Coal-Tar Pitch for Roofing, Dampproofing and Waterproofing, AASHO M 118 (ASTM D 450). Type B pitch shall be furnished unless otherwise specified.

Primer for use with coal-tar pitch in Dampproofing and Waterproofing shall conform to the Specification for Creosote for Priming Coat with Coal-Tar Pitch in Dampproofing and Waterproofing, AASHO M 121 (ASTM D 43).

(4) FABRIC

The fabric shall conform to the Specification for Woven

Cotton Fabrics Saturated with Bituminous Substances for Use in Waterproofing, AASHO M 117 (ASTM D 173).

(5) TAR FOR ABSORPTIVE TREATMENT

Tar for absorptive treatment shall be a liquid water-gas tar which conforms to the following requirements :

Specific gravity, 25/25° C (77/77 F) . . .	1.030 to 1.100
Specific viscosity at 40° C (104 F) (Engler), not more than	3.0
Total distillate, percent by weight, to 300° C (572 F), not more than	50.0
Bitumen (soluble in carbon disulphide), not less than, percent	98.0
Water, not more than, percent . . .	3.0

(6) TAR SEAL COAT

Tar seal coat shall conform to the Specification for Tar for Use in Road Construction, AASHO M 52, Grade RTCB-5.

(7) JOINT FILLERS

Filler for use in horizontal joints in waterproofing work shall be a straight-refined oil asphalt conforming to the following requirements :

Flash point : Not less than 232° C (450 F).

Softening point : 48.9° C (120 F) to 54.4° C (130 F).

Penetration : at 0°C (32 F), 200 grams, 1 minute, not less than 15.

At 25° C (77 F), 100 grams, 5 seconds, 50 to 60.

At 46° C (115 F) 50 grams, 5 seconds, not more than 300.

Loss on heating : At 163° C (325 F), 50 grams, 5 hours, not more than 0.5 percent.

Ductility: at 25° C (77 F), 5 centimeters per minute, not less than 85.

Total bitumen (soluble in carbon disulphide): Not less than 99.5 percent.

Filler for use in vertical joints in waterproofing work shall be an asphalt conforming to the requirements specified above for horizontal joint filler, to which has been added 20 percent, by weight, of asbestos fiber. The incorporation of the asbestos fiber with the asphalt shall be done at the factory of the manufacturer to insure a uniform distribution of the fiber throughout the mix.

(8) INSPECTION AND DELIVERY

All waterproofing materials shall be tested before shipment. Unless otherwise ordered by the Engineer, they shall be tested at the place of manufacture, and, when so tested, a copy of the test results shall be sent to the Engineer by the chemist or inspection bureau which has been designated to make the tests; and each package shall have affixed to it a label, seal or other mark of identification showing that it has been tested and found acceptable, and identifying the package with the laboratory tests.

Factory inspection is preferred, but, in lieu thereof, the Engineer may order that representative samples, properly identified, be sent to him for test prior to shipment of the materials. After delivery of the materials, representative check samples shall be taken which shall determine the acceptability of the materials.

All materials shall be delivered on the work in original containers, plainly marked with the manufacturer's brand or label.

517.03 STORAGE OF FABRIC

The fabric shall be stored in a dry, protected place. The rolls shall not be stored on end.

517.04 PREPARATION OF SURFACE

All concrete surfaces which are to be waterproofed shall be reasonably smooth and free from projections or holes which might cause puncture of the membrane. The surface shall be dry so as to prevent the formation of steam when the hot asphalt or tar is applied; and, immediately before the application of the waterproofing, the surface shall be thoroughly cleaned of dust and loose materials.

No waterproofing shall be done in wet weather. Should the surface of the concrete become temporarily damp, it shall be covered with a 2-inch layer of hot sand, which shall be allowed to remain in place from one to two hours, or long enough to produce a warm and surface-dried condition, after which the sand shall be swept back, uncovering sufficient surface for beginning work, and the operation repeated as the work progresses.

517.05 APPLICATION - GENERAL

Asphalt shall be heated to a temperature between 150° and 175°C (300 and 350 F), and tar for hot application shall be heated to a temperature between 95° and 120°C (200 and 250 F), with frequent stirring to avoid local overheating. The heating kettles shall be equipped with thermometers.

In all cases, the waterproofing shall begin at the low point of the surface to be waterproofed, so that water will run over, and not against or along, the laps.

The first strip of fabric shall be of half-width; the second shall be full width, lapped the full width of the first sheet;

and the third and each succeeding strip shall be full width and lapped so that there will be two layers of fabric at all points with laps not less than 5cm (2 in) wide. All end laps shall be at least 30cm (12 in).

Beginning at the low point of the surface to be waterproofed, a coating of primer shall be applied and allowed to dry before the first coat of asphalt is applied. The waterproofing shall then be applied as follows :

Beginning at the low point of the surface to be waterproofed, a section about 50cm (20 in) wide and the full length of the surface shall be mopped with the hot asphalt or tar, and there shall be rolled into it, immediately following the mopping, the first strip of fabric, or half-width, which shall be carefully pressed into place so as to eliminate all air bubbles and obtain close conformity with the surface. This strip and an adjacent section of the surface of a width equal to slightly more than half of the width of the fabric being used shall then be mopped with hot asphalt or tar, and a full width of the fabric shall be rolled into this, completely covering the first strip and pressed into place as before. This second strip and an adjacent section of the concrete surface shall then be mopped with hot asphalt or tar, and the third strip of fabric "shingled" on so as to lap the first strip not less than 5cm (2 in). This process shall be continued until the entire surface is covered; each strip of fabric lapping at least 5cm (2 in) over the last strip but one. The entire surface shall then be given a final mopping of hot asphalt or tar.

The completed waterproofing shall be a firmly bonded membrane composed of two layers of fabric and three moppings of asphalt or tar, together with a coating of primer. Under no circumstances shall one layer of fabric touch another layer

t any point, or touch the surface, as there must be at least hree complete moppings of asphalt or tar.

In all cases the mopping on concrete shall cover the urface so that no gray spots appear, and on cloth it shall be ufficiently heavy to completely conceal the weave. On hori-ontal surfaces not less than 45 liters (12 gal.) of asphalt or ar shall be used for each 10 sq. meters (100 sq. ft.) of finished vork, and on vertical surfaces not less than 55 liters (15 gal) shall e used. The work shall be so regulated that, at the close of a lay's work, all cloth that is laid shall have received the final nopping of asphalt or tar. Special care shall be taken at all aps to see that they are thoroughly sealed down.

17.06 APPLICATION-DETAILS

At the edges of the membrane and at any points where t is punctured by such appurtenances as drains or pipes, uitable provisions shall be made to prevent water from getting etween the waterproofing and the waterproofed surface.

All flashing at curbs and against girders, spandrel walls, tc., shall be done with separate sheets lapping the main nembrane not less than 30cm (12 in). Flashing shall be closely ealed, either with a metal counter-flashing or by embedding the pper edges of the flashing in a groove poured full of joint filler.

Joints which are essentially open joints but which are not lesigned to provide for expansion shall first be caulked with akum and lead wool and then filled with hot joint filler.

Expansion joints, both horizontal and vertical, shall be rovided with sheet copper or lead in "U" or "V" form in ccordance with the details. After the membrane has been laced, the joint shall be filled with hot joint filler. The mem-rane shall be carried continuously across all expansion joints.

At the ends of the structure the membrane shall be carried vell down on the abutments, and suitable provision made for ll movement.

517.07 DAMAGE PATCHING

Care shall be taken to prevent injury to the finished membrane by the passage over it of men or wheelbarrows, or by throwing any material on it. Any damage which may occur shall be repaired by patching. Patches shall extend at least 30cm (12 in) beyond the outermost damaged portion, and the second ply shall extend at least 8cm (3 in) beyond the first.

517.08 PROTECTION COURSE

Over the waterproofing membrane, constructed as specified above, there shall be constructed a protection course which, unless otherwise specified or shown on the Plans, shall be a 5cm (2 in) course of mortar mixed in the proportion of one part Portland cement and two parts sand. This mortar course shall be reinforced midway between its top and bottom surfaces with wire netting of 15cm (6 in) mesh and No. 12 gauge, or its equivalent. The top surface shall be troweled to a smooth, hard finish and, where required, true to grade.

The construction of the protection course shall follow the waterproofing so closely that the latter will not be exposed without protection for more than 24 hours.

517.09 METHOD OF MEASUREMENT

The quantity of membrane waterproofing to be measured for payment shall be the actual number of square meters, measured in place. No measurement of turned-up edges will be made and no deductions will be made for open joints, scuppers or other small openings.

517.10 BASIS OF PAYMENT

Waterproofing, accepted and measured as specified above shall be paid for at the contract unit price per square meter. Such price shall include the cost of furnishing all equipment, materials and labor necessary for the satisfactory completion of the waterproofing membrane and the protection course.

SECTION 518 DAMPPROOFING

518.01 GENERAL

When specified on the Plans or in the Special Provisions, surfaces shall be dampproofed, as specified herein.

518.02 MATERIALS

The material used for dampproofing shall be tar or asphalt, as required by the Special Provisions.

Tar for absorptive treatment (or primer), tar seal coat, and asphalt for primer and seal coat shall conform to the requirements of Article 517.02.

518.03 PREPARATION OF SURFACE

The surface to which the dampproofing coating is to be applied shall be cleaned of all loose and foreign material and dirt, and shall be dry. When necessary, the Engineer may require the surface to be scrubbed with water and a stiff brush, after which the surface shall be allowed to dry before application of the primer.

518.04 APPLICATION

Concrete, brick or other surfaces which are to be protected by dampproofing shall be thoroughly clean before the primer is applied. They shall then be brush- or spray-painted with two or more coats (as indicated on the Plans or in the Special Provisions) of tar or asphalt for absorptive treatment. Below ground not less than two coats shall be applied, using 0.45 liters (1/8 gal.) for each square meter of surface. On the well-primed surface one application of tar or asphalt seal coat

shall be applied by brush, using 0.4 liters (0.1 gal.) per square meter

Care shall be taken to confine all paints to the areas to be waterproofed and to prevent disfigurement of any other parts of the structure by dripping or spreading of the tar or asphalt.

518.05 METHOD OF MEASUREMENT

The quantity of dampproofing to be measured for payment shall be the actual number of square meters of surface, dampproofed as specified above.

518.06 BASIS OF PAYMENT

Dampproofing, accepted and measured as specified above shall be paid for at the contract unit price per square meter. Such price shall include the cost of furnishing all equipment, materials and labor necessary for the satisfactory completion of the dampproofing.

SECTION 519 NAME PLATES

519.01 GENERAL REQUIREMENTS

When specified, the Contractor shall furnish and install nameplates of such form, dimensions, material and design as may be shown on the Plans. Unless otherwise provided, the contract price for the superstructure shall include the cost of such nameplates.

No permanent plates or markers other than those shown on the Plans or approved by the Engineer will be permitted on any structure.

SECTION 520 TIMBER STRUCTURES

520.01 MATERIAL

(1) LUMBER AND TIMBER (Solid Sawed or Glued Laminated)

Sawed lumber and timber shall conform to the Specifications for Structural Timber, Lumber and Piling, AASHO M 168, or equivalent local Timber, Lumber or Piling acceptable to the Engineer.

Structural glued laminated timber shall conform to U.S. Commercial Standard CS 253-63 for Structural Glued Laminated Timber. The term structural glued laminated timber, as employed in CS 253-63, is an engineered, stress-rated product of a timber laminating plant, comprising assemblies of suitably selected and prepared wood laminations securely bonded together with adhesives. The grain of all laminations is approximately parallel longitudinally. The separate laminations may not exceed 50mm (2 inches) in net thickness. They may comprise pieces end-joined to form any length, pieces placed or glued edge-to-edge to make wider ones, or pieces bent to curved form during gluing.

For the various structural purposes, appropriate grades or their equivalent shall be selected in accordance with the design requirements for stress-grades given in Section 1.10 in the Design Specifications.

Structural lumber and timber, solid sawed, or glued laminated, shall not be used in exposed permanent structures without pressure preservative treatment. Temporary structures or lumber and timber with adequate heartwood requirements (see AASHO M 168) need not require preservatively-treated lumber and timber.

(2) STRUCTURAL SHAPES

Rods, plates and shapes shall be of structural steel or wrought-iron, as specified, conforming to the requirements of Section 510.03. Eyebars shall conform to the requirements of Section 510.03. (1) (b) (2).

(3) CASTINGS

Castings shall be cast steel or gray-iron, as specified, conforming to the requirements or Section 510.03 (4).

(4) HARDWARE

Machine bolts, drift-bolts and dowels may be either wrought-iron or medium steel. Washers may be cast-iron ogee or malleable iron castings, or they may be cut from medium steel or wrought-iron plate, as specified.

Machine bolts shall have square heads and nuts, unless otherwise specified. Nails shall be cut or round wire of standard form. Spikes shall be cut or wire spikes, or boat spikes, as specified.

Nails, spikes, bolts, dowels, washers and lag screws shall be black or galvanized, as specified.

Unless otherwise specified, all hardware for treated timber bridges, except malleable iron connectors, shall be galvanized or cadmium-plated.

(5) PAINT FOR TIMBER STRUCTURES

Paint for timber structures, except as otherwise provided herein, shall conform to the Specification for White and Tinted Ready-Mixed Paint (Lead and Zinc Base), AASHO M 70. The paint as specified is intended for use in covering previously painted surfaces. When it is applied to unpainted timber, turpentine and linseed oil shall be added as required

by the character of the surface in an amount not to exceed 1/8 liter each per liter (one pint each per gallon) of the paint as specified. The paint shall be either white or tinted, as directed by the Engineer.

If aluminum or black paint is specified, the first or prime coat shall be as specified above. The paint for additional coats shall be as follows:

(a) ALUMINUM PAINT

Aluminum paint shall conform to the Specification for Aluminum Paint, AASHO M 69.

(b) BLACK PAINT

(1) COMPOSITION

	Maximum percent	Minimum percent
Pigment	32	28
Liquid (containing at least 80 percent linseed oil)	72	68
Water.	05	-
Coarse particles and "skins" (total residue retained on No. 325 sieve based on pigments)	1.5	-
Weight per liter, not less than 1.0 kilogram (per gallon, not less than 9.0 lbs)		-

(2) PIGMENT

The pigment in both semipaste and ready-mixed

paints shall consist of carbon, lead oxide, insoluble mineral material, and, at the option of the manufacturer, oxide of iron. The pigment shall show, on analysis, not less than 20 percent of carbon and not less than 5 percent of lead oxide calculated as Pb_3O_4. (Since oxide of lead may be dissolved by the oil in paint, in all cases when the amount of lead in the pigment calculated as Pb_3O_4 is found to be less than 5 percent of the pigment, lead should be determined in the vehicle and the total lead in the paint computed to percentage of pigment.) The total of the lead oxide, iron oxide, insoluble mineral material and loss on ignition shall be not less than 90 percent.

(3) VEHICLE

The liquid in semipaste paint shall be entirely linseed oil; in ready-mixed paint it shall contain not less than 80 percent of linseed oil, the balance to be combined drier and thinner. The thinner shall be turpentine, volatile mineral spirits or a mixture thereof.

(4) READY-MIXED PAINT

Unless otherwise authorized by the Engineer, the paint shall be factory-mixed.

Ready-mixed paint shall be well-ground, shall not settle badly or cake in the container, shall be readily broken up with a paddle to a smooth, uniform paint of good brushing consistency, and shall dry within 18 hours to a full oil gloss, without streaking, running or sagging. The color and hiding power

when specified, shall be equal to those of a sample mutually agreed upon by buyer and seller.

(6) TIMBER CONNECTORS

(a) GENERAL

Connectors for treated timber structures, except those of malleable iron, shall be galvanized in accordance with AASHO M 111(ASTM A 123), and shall be of the type specified in Section 520.02. (See Table 520.01 for Typical Dimensions of Timber Connectors.)

TABLE 520.01

SPLIT RINGS

		Millimeters		Inches	
Ring Size		63.5	101.60	2 1/2	4
Split Ring :					
Inside Diameter at Center When Closed		63.5	101.60	2.500	4.000
Thickness of Metal at Center		4.1	4.90	.163	.193
Depth of Metal (Width of Ring)		19.1	25.40	.750	1.000
Groove :					
Inside Diameter		65.0	103.63	2.56	4.08
Width		4.6	5.33	18	.21
Depth		9.5	12.7	.375	.50
Bolt-Hole Diameter		14.3	20.64	9/16	13/16
Washers, Standard :					
ROUND	Cast or Malleable Iron, Dia.	66.7	76.20	2 5/8	3
	Wrought-Iron (Minimum) :				
	Diameter	34.9	50.80	1 3/8	2
	Thickness	2.4	4.0	3/32	5/32
SQUARE PLATE	Length of Side	50.8	76.20	2	3
	Thickness	3.2	4.8	1/8	3/16
Projected Area : Portion of One Ring within Member		7.1 Sq Cm	14.51 Sq Cm	1.10 Sq In	2.25 Sq In

TABLE 520.01 (CONTINUED)

TOOTHED RINGS

		MILLIMETERS				INCHES			
TOOTHED RING	Ring Size	50.8	66.7	85.7	101.6	2	2 5/8	3 3/8	4
	Diameter	50.8	66.7	85.7	101.6	2.000	2.625	3.375	4.000
	Thickness of Metal	1.6	1.6	1.6	1.6	.061	.061	.061	.061
	Depth	23.9	23.9	23.9	23.9	.940	.940	.940	.940
	Depth of Fillet (Minimum)	6.4	6.4	6.4	6.4	.250	.250	.250	.250
	Bolt-Hole Diameter	14.3	17.5	20.6	20.6	9/16	11/16	13/16	13/16
WASHERS (MINIMUM)	ROUND								
	Cast or Malleable Iron (Dia.)	50.8	66.7	76.2	88.9	2	2 5/8	3	3 1/2
	SQUARE PLATE								
	Length of Side	50.8	63.5	76.2	88.9	2	2 1/2	3	3 1/2
	Thickness	4.8	6.4	6.4	9.5	3/16	1/4	1/4	3/8
PROJECTED AREA : Portion of One Ring within Member		606.5 SQ M/M	793.5 SQ M/M	1025.9 SQ M/M	1219.4 SQ M/M	.94 SQ IN	1.23 SQ IN	1.59 SQ IN	1.89 SQ IN

TABLE 520.01 (CONTINUED)

SHEAR PLATES

	MILLIMETERS				INCHES			
PLATE SIZE	66.7	66.7	101.6	101.6	2 5/8	2 5/8	4	4
Shear Plate : Material	Pressed Steel	Light Gage	Malleable Iron		Pressed Steel	Light Gage	Malleable Iron	
Diameter of Plate	66.5	66.5	102.1	102.1	2.62	2.62	4.02	4.02
Diameter of Bolt Hole	20.6	20 6	20.6	23.9	0.81	0.81	0.81	0.94
Thickness of Plate	4.4	3.1	5.1	5.1	0.17	0.12	0.20	0.20
Depth of Flange	10.7	8.9	15.8	15.8	0.42	0.35	0.62	0.62
Hole Diameter for Bolts in Straps or Shapes 1/	20.6	20.6	20.6	23.8	13/16	13/16	13/16	15/16
CIRCULAR DIMENSIONS								
A	66.8	66.8	102.4	102.4	2.63	2.63	4.03	4.03
B		27.2	39.4	39.4		1 07	1.55	1.55
C	20.6	20.6	20.6	23.9	0.81	0.81	0.81	0.94
D		16.5	24.6	24.6		0.65	0.97	0.97
E	4.8	3.3	6.9	6.9	0.19	0.13	0.27	0.27
F	11.4	9.7	16.3	16.3	0.45	0.38	0.64	0.64
G	6.4	3 6	5.6	5.6	0.25	0.14	0.22	0.22
H		8.6	12.7	12.7		0.34	0.50	0 50
I	57.2	60.2	88.7	88.7	2.25	2.37	3.49	3.49

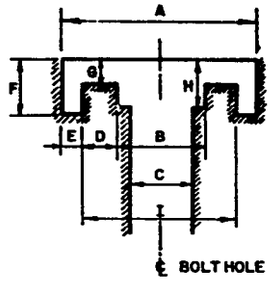

BOLT HOLE

TABLE 520.01 (CONTINUED)

SHEAR PLATES

STANDARD WASHERS		MILLIMETERS				INCHES			
ROUND	Cast or Malleable Iron (Diameter)	76.2	76.2	76.2	88.9	3	3	3	3 1/2
ROUND	Wrought-Iron : Min Diameter	50.8	50.8	50.8	57.2	2	2	2	2 1/4
ROUND	Wrought-Iron : Min Thickness	4.0	4.0	4.0	4.4	5/32	5/32	5/32	11/64
SQUARE PLATE	Length of Side	76.2	76.2	76.2	76.2	3	3	3	3
SQUARE PLATE	Thickness	6.4	6.4	6.4	6.4	1/4	1/4	1/4	1/4
Bolt-Hole Diameter (Timber)		20.6	20.6	20.6	23.8	13/16	13/16	13/16	15/16
Projected Area : Portion of One Shear Plate within Member		7.6 Sq CM	6.4 Sq CM	16.6 Sq CM	16.6 Sq CM	1.18 Sq IN	1.00 Sq IN	2.58 Sq IN	2.58 Sq IN

1) Steel Strap or Shapes for use with Shear Plates shall be designed in accordance with accepted Engineering Practices.

(b) SPLIT RING CONNECTORS

Split rings of 64mm ($2\frac{1}{2}$ inch) inside diameter, 102mm (4 inch) inside diameter and 152mm (6 inch) inside diameter shall be manufactured from hot-rolled, low carbon steel conforming to AASHO 162. Except for the 152mm (6-inch) ring (which is rectangular in cross section), the metal section shall be beveled from the central portion toward the edges to a thickness less than the midsection. It shall be cut through in one place in its circumference to form a tongue and slot.

Connector grooves in timber shall be cut concentric with the bolt hole and shall provide a snug fit. Inside-groove diameter shall be larger than ring diameter in order that the ring will expand slightly during installation.

(c) TOOTH-RING CONNECTORS

Tooth-ring timber connectors shall be stamped cold from U.S. Standard 16-gauge hot-rolled sheet steel conforming to AASHO M 162, and shall be bent cold to form a circular, corrugated, sharp-toothed band and circle. All sizes, 51mm, 67mm, 86mm and 102mm diameters (2 inch, 2 5/8 inch, 3 3/8 inch and 4 inch) shall have an overall depth of 24mm (.94 inch) and a depth of fillet of 64mm (.25 inch).

(d) SHEAR-PLATE CONNECTORS

PRESSED-STEEL TYPE. Pressed steel shear-plates of 67mm (2 5/8 inch) diameter shall be manufactured from mild steel conforming to AASHO M 162. Each plate shall be a true circle with a flange around the edge, extending at right angles to the face of the plate and extending from one face only.

MALLEABLE IRON TYPE. Malleable iron shear-plates of 102mm (4 inch) diameter shall be manufactured according to AASHO M 106 for malleable iron castings. Each casting shall consist of a perforated round plate with a flange around the edge extending at right angles to the face of the plate and projecting from one face only.

(e) SPIKE-GRID CONNECTORS

Spike-grid timber connectors shall be manufactured according to AASHO M 106 for malleable iron castings. They shall consist of four rows of opposing spikes forming a 105mm-(4 1/8 in) square grid with 16 teeth, which are held in place by fillets.

Circular grids of 83mm ($3\frac{1}{4}$ inch) diameter shall consist of 8 opposing spikes equally spaced around the outer circumference and held in place by connecting fillets around the outer diameter and radial fillets projecting to a central circular fillet which forms a bolt hole opening of 32mm ($1\frac{1}{4}$ ").

520.02 TIMBER CONNECTORS — ASSEMBLY

Timber connectors shall be furnished as specified on the Plans. The split ring and the shear-plate shall be installed in precut grooves of dimensions as given herein or as recommended by the manufacturer. The toothed ring and the spike grid shall be forced into the contact surfaces of the timbers joined by means of pressure equipment. All connectors of this type at a joint shall be embedded simultaneously and uniformly.

Fabrication of all structures using connectors shall be done prior to treatment. When prefabricated from templates or shop details, bolt holes shall not be more than 2mm (1/16 inch) from required placement. Bolt holes shall be 2mm (1/16 inch) larger

than bolt diameter. Bolt holes shall be bored perpendicular to the face of the timber.

Timber after fabrication shall be stored in a manner which will prevent changes in the dimensions of the members before assembly.

Dimensions of material and details not otherwise specified shall meet with the approval of the Engineer.

520.03 STORAGE OF MATERIAL

Lumber and timber stored on the site shall be kept in orderly piles or stacks. Untreated material shall be open-stacked on supports at least 0.3 meters (12 inches) above the ground surface to avoid absorption of ground moisture and permit air circulation, and it shall be so stacked and stripped as to permit free circulation of air between the tiers and courses. It will be advisable in particular cases for the Engineer to require protection from the weather by a suitable covering.

On glued, laminated structural members that are not to be preservatively treated, an approved end sealer shall be applied after end-trimming of each completed member.

520.04 WORKMANSHIP

All framing shall be true and exact. Unless otherwise specified, nails and spikes shall be driven with just sufficient force to set the heads flush with the surface of the wood. Workmanship on metal parts shall conform to the requirement of Section 520.02.

520.05 TREATED TIMBER

(1) HANDLING

Treated timber shall be carefully handled without dropping,

breaking of outer fibers, bruising or penetrating the surface with tools. It shall be handled with rope slings. Cant hooks, peaveys, pikes or hooks shall not be used.

(2) FRAMING AND BORING

All cutting, framing and boring of treated timbers shall be done before treatment in insofar as is practicable. When treated timbers are to be placed in waters infested by marine borers, untreated cuts, borings or other joint framings below, high water elevation shall be avoided.

(3) CUTS AND ABRASIONS

All cuts in treated piles or timbers, and all abrasions, after having been carefully trimmed, shall be covered with 2 applications of a mixture of 60 percent creosote oil and 40 percent roffing pitch, or brush-coated with at least two applications of hot creosote oil and covered with hot roofing pitch.

(4) BOLT HOLES

All bolt holes bored after treatment shall be treated with creosote oil by means of an approved pressure-bolt hole treater. Any unfilled holes, after being treated with creosote oil, shall be plugged with creosoted plugs.

(5) TEMPORARY ATTACHMENT

Whenever, with the approval of the Engineer, forms or temporary braces are attached to treated timber with nails or spikes, the holes shall be filled by driving galvanized nails or spikes flush with the surface, or plugging holes as required for bolt holes.

520.06 UNTREATED TIMBER

In structures of untreated timber the following surfaces shall

be thoroughly coated with two coats of hot creosote oil before assembling: ends, tops, and all contact surfaces of sills, caps, floor beams and stringers; and all ends, joints, and contact surfaces of bracing and truss members. The back faces of bulkheads and all other timber which is to be in contact with earth, metal or other timber shall be similarly treated.

Bolts passing through non-resinous wood shall be galvanized.

520.07 TREATMENT OF PILE HEADS

(1) GENERAL

Pile heads, after cutting to receive the caps and prior to placing the caps, shall be treated to prevent decay.

Immediately after making final cutoff on treated-timber foundation piles, the cut area shall be given two liberal applications of preservative followed by a heavy application of coal-tar pitch or other approved sealer. Treated timber piles which will have the cutoff exposed in the structure shall be further protected by one of the following methods, as specified on the Plans. If not otherwise specified, Method B shall be used.

(2) METHOD A—ZINC COVERING

The sawed surface shall be covered with three applications of a mixture of 60 percent creosote oil and 40 percent roofing pitch, or thoroughly brush-coated with three applications of hot creosote oil and covered with hot roofing pitch. Before placing the cap, a sheet of 12-gauge, 0.7mm (.028 inch) zinc shall be placed on each pile head. The sheet zinc shall be of sufficient size to project at least 102mm (4 inches) outside of the pile, and it shall be bent

down, neatly trimmed and securely fastened to the faces of the pile, with large-headed galvanized roofing nails.

(3) METHOD B—FABRIC COVERING

The heads of all piles shall be covered with alternate layers of hot pitch and loosely woven fabric similar to membrane waterproofing, using four applications of pitch and three layers of fabric. The cover shall measure at least 152mm (6 inches) more in dimension than the diameter of the pile, and shall be neatly folded down over the pile and secured by large-headed galvanized nails or by binding or serving with not less than seven complete turns of galvanized wire securely held in place by large-headed galvanized nails and staples.

The sawed heads of untreated piles shall be thoroughly brush coated with two applications of hot creosote oil.

520.08 HOLES FOR BOLTS, DOWELS, RODS AND LAG SCREWS

Holes for round drift-bolts and dowels shall be bored with a bit 2mm (1/16 inch) less in diameter than the bolt or dowel to be used. The diameter of holes for square drift-bolts or dowels shall be equal to the least dimension of the bolt or dowel.

Holes for machine bolts shall be bored with a bit the same diameter as the bolts, except as otherwise provided in Section 520.02.

Holes for rods shall be bored with a bit 2mm (1/16 inch) greater in diameter than the rod.

Holes for lag screws shall be bored with a bit not larger than the body of the screw at the base of the thread.

520.09 BOLTS AND WASHERS

A washer, of the size and type specified, shall be used under all bolt heads and nuts which would otherwise come in contact with wood.

The nuts of all bolts shall be effectually locked after they have been finally tightened.

520.10 COUNTERSINKING

All recesses in treated timber, formed for countersinking shall be painted with hot creosote oil. Recesses likely to collect injurious materials shall be filled with hot pitch.

520.11 FRAMING

All lumber and timber shall be accurately cut and framed to a close fit in such manner that the joints will have even bearing over the entire contact surfaces. Mortises shall be true to size for their full depth, and tenons shall fit snugly. No shimming will be permitted in making joints, nor will open joints be accepted.

520.12 PILE BENTS

The piles shall be driven as indicated on the Plans, with a variation of the portion above the ground of not more than 2mm per meter ($\frac{1}{4}$ inch per foot) from the vertical or batter indicated, or so that the cap may be placed in its proper location without inducing excessive stresses in the piles. Excessive manipulation of the piles will not be permitted, and the Contractor will be required to redrive or use other satisfactory methods to avoid such manipulations. No shimming on tops of piles will be permitted.

The piles for any one bent shall be carefully selected as to size, to avoid undue bending or distortion of the sway

bracing. However, care shall be exercised in the distribution of piles of varying sizes to secure uniform strength and rigidity in the bents of any given structure.

Cutoffs shall be accurately made to insure perfect bearing between the cap and piles.

520.13 FRAMED BENTS

(1) MUD SILLS

Untreated timber used for mud sills shall be of durable timber. Mud sills shall be firmly and evenly bedded to solid bearing and tamped in place.

(2) CONCRETE PEDESTALS

Concrete pedestals for the support of framed bents shall be carefully finished so that the sills or posts will take even bearing on them. Dowels of not less than 19mm-(3/4 inch) diameter and projecting at least 152mm (6 inches) above the tops of the pedestals shall be set in them when they are cast, for anchoring the sills or posts.

(3) SILLS

Sills shall have true and even bearing on mud sills, piles or pedestals. They shall be drift-bolted to mud sills or piles with bolts of not less than 19mm-(3/4 inch) diameter and extending into the mud sills or piles at least 15cm (6 inches). When possible, all earth shall be removed from contact with sills so that there will be free air circulation around them.

(4) POSTS

Posts shall be fastened to pedestals with dowels of not less than 19mm-(3/4 inch) diameter, extending at least 15cm (6 inches) into the posts.

Posts shall be fastened to sills by one of the following methods, as indicated on the Plans:

(a) By dowels of not less than 19mm (3/4 inch) diameter, extending at less 15cm (6 inches) into posts and sills.

(b) By drift-bolts of not less than 19mm (3/4 inch) diameter, driven diagonally through the base of the post and extending at least 23cm (9 inches) into the sill.

(5) DESIGN AND CONSTRUCTION

Where framed structures will be subjected to wind or tractive loads, the connections between members thereof shall be so designed and constructed as to resist the forces resulting therefrom. (See Article 1.2.1 in the Design Specifications).

520.14 CAPS

Timber caps shall be placed, with ends aligned, in a manner to secure an even and uniform bearing over the tops of the supporting posts or piles. All caps shall be secured by drift-bolts of not less than 19mm (3/4 inch) diameter, extending at least 23cm (9 inches) into the posts or piles. The drift-bolts shall be approximately in the center of the post or pile. (See Section 520.13 (5)).

520.15 BRACING

The ends of bracing shall be bolted through the pile, post or cap with a bolt of not less than 16mm (5/8 inch) diameter. Intermediate intersections shall be bolted, or spiked with wire or boat spikes, as indicated on the Plans. In all cases spikes shall be used in addition to bolts.

520.16 STRINGERS

Stringers shall be sized at bearing and shall be placed in

position so that knots near edges will be in the top portions of the stringers.

Outside stringers may have butt joints with the ends cut on a taper, but interior stringers shall be lapped to take bearing over the full width of the floor beam or cap at each end. The lapped ends of untreated stringers shall be separated at least 12mm (1/2 inch) for the circulation of air, and shall be securely fastened by drift-bolting where specified. When stringers are two panels in length, the joints shall be staggered.

Cross-bridging between stringers shall be neatly and accurately framed and securely toe-nailed with at least two nails in each end. All cross-bridging members shall have full bearing at each end against the sides of stringers. Unless otherwise specified in the contract, cross-bridging shall be placed at the center of each span.

520.17 PLANK FLOORS

Plank shall be of the grade required as specified in Section 520.01 (1).

Single plank floors shall consist of a single thickness of plank supported by stringers or joists. The planks shall be laid heart-side down, with 6mm (1/4 inch) openings between them for seasoned material and with tight joints for unseasoned material. Each plank shall be securely spiked to each joists. The planks shall be carefully graded as to thickness and so laid that no two adjacent planks shall vary in thickness by more than 2mm (1/16 inch).

Two-ply timber floors shall consist of two layers of flooring supported on stringers or joists. The top course may be laid either diagonal or parallel to the centerline of roadway, as specified, and each floor piece shall be securely fastened to the lower course. Joints shall be staggered at least 1 meter

(3 feet). If the top flooring is placed parallel to the centerline of the roadway, special care shall be taken to securely fasten the ends of the flooring. At each end of the bridge these members shall be beveled.

520.18 LAMINATED OR STRIP FLOORS

The strips shall be of the grade required as specified in Section 520.01 (1). The strips shall be placed on edge, at right angles to the centerline of roadway. Each strip shall be spiked to the preceding strip at each end and at approximately 1/2 meter (18-inch) intervals, with the spikes driven alternately near the top and bottom edges. The spikes shall be of sufficient length to pass through two strips and at least half-way through the third strip.

If timber supports are used, every other strip shall be toe-nailed to every other support. The size of the spikes shall be as shown on the Plans. When specified on the Plans, the strips shall be securely attached to steel supports by the use of approved galvanized-metal clips. Care shall be taken to have each strip vertical and tight against the preceding one, and bearing evenly on all the supports.

520.19 WHEEL GUARDS AND RAILING

Wheel guards and railing shall be accurately framed in accordance with the Plans and erected true to line and grade.

Wheel guards shall be laid in sections not less than 3.7 meters (12 feet) long.

520.20 PAINTING

Rails and rail posts of untreated timber shall be painted with three coats of paint.

Parts of the structure, other than rails and rail posts, which

are to be painted shall be designated on the Plans or in the Special Provisions.

Metal parts, except hardware, shall be given one coat of shop paint and, after erection, two coats of field paint, as specified in Section 514.

520.21 METHOD OF MEASUREMENT

Lumber and timber, unless otherwise specified, shall be measured for payment by the cubic meter for the material as called for on the Plans and remaining in the finished structure. No allowance for waste will be measured for payment.

520.22 BASIS OF PAYMENT

Lumber and timber will be paid for at the contract unit price per cubic meter, measured as specified above.

Payment for timber structures shall include the furnishing of material, preservative treatment, hardware, equipment, tools and labor necessary for the erection and painting of the work in a satisfactory manner.

Metal parts, other than hardware, will be paid for at the contract unit price per kilogram, the weight being computed in the same manner as specified for steel structures, Section 510.63.

SECTION 521 PRESERVATIVE TREATMENTS FOR TIMBER

521.01 GENERAL

The kind of preservative treatment required shall be as specified in the Special Provisions or as noted on the Plans.

The preservatives specified herein are not intended to be used interchangeably, but the kind of preservative to be used shall be adopted for its suitability to the conditions of exposure to which it will be subjected. Some of the conditions to be considered are : effect of marine borers, effect of termites, action of exposure to water and leaching of the preservative, effect of contact with the ground, painting, requirements and cleanliness requirements. Experience records for the particular exposure intended shall be given consideration in selecting the treatment to be used.

521.02 MATERIALS

Piling, sawed lumber and timber shall conform to the requirements of AASHO M 168, or equivalent local piling, lumber or timber acceptable to the Engineer. All wood species are not equally treatable and therefore all species are not equally acceptable under severe exposure conditions. Care should be exercised to select those species which are acceptable for the intended application.

Timber preservatives and treatment method shall conform to AASHO M 133, except that the timber quality shall be as stated above. The type of preservative furnished and its retention shall be in accordance with that specified in the Special Provisions or as as noted on the Plans.

Timber expected to be painted should be treated with

waterborne salts or pentachlorophenol carried in a volatile organic solvent.

521.03 IDENTIFICATION AND INSPECTION

Each piece of treated timber shall bear a legible brand, mark or tag indicating the name of the treater and the specification symbol or specification requirements to which the treatment conforms. The Engineer shall be provided adequate facilities and free access to the necessary parts of the treating plant for inspection of material and workmanship to determine that the contract requirements are met. The Engineer reserves the right to retest all materials after delivery to the job-site, and to reject all materials which do not meet the requirements of the contract ; provided that, at the job-site reinspection, conformance within five percent of contract requirements shall be acceptable. Reinspection at the job-site may include assay to determine retention of preservatives, and extraction and analysis of preservative to determine its quality.

521.04 METHOD OF MEASUREMENT

No separate measurement of preservative treatment will be made.

521.05 BASIS OF PAYMENT

No direct payment for preservative treatment will be made and all costs of such treatment will be considered incidental to the piling, sawed lumber or timber for which this treatment is specified.

SECTION 522 TIMBER CRIBBING

522.01 MATERIAL

(1) TIMBER

Timber used for cribbing shall conform to the requirements of Section 520, and unless otherwise specified shall be the same as for caps, posts, sills, etc. If treated timber is used, all hardware shall be galvanized.

(2) LOGS

Logs used for cribbing shall conform in quality to the requirements specified for timber piles in AASHO M 168.

522.02 PREPARATION

When timber or logs are to be treated, all framing shall be completed before treatment and all surfaces cleaned of dirt and grease.

All timber and log framing shall be true to line and angle.

522.03 DIMENSIONS

(1) TIMBER

When cribs are constructed of sawed timber, no timber shall be less than 20 centimeters (8 inch) in least dimension. The face timber in the base tier shall be not less than 25 centimeters (10 inch) in least dimension.

(2) LOGS

When cribs are constructed of logs, no face log shall have a diameter at the small end of less than 25 centimeters (10 inch), and tie logs shall be not less than 20 centimeters (8 inch) in diameter at the small end. The face log in the

base tier shall be not less than 30 centimeters (12 inch) in diameter at the small end.

All logs for cribbing shall be selected from the logs available with as small an amount of taper as possible. The length of logs used shall be dependent upon the taper.

522.04 CONSTRUCTION

(1) FOUNDATION

The foundation or bed for the cribbing shall be excavated to exact grade and shall be approved as to bearing quality by the Engineer before any of the crib work is placed.

(2) MUD SILLS

When mud sills are used, they shall be set at right angles to the face of the cribbing, and firmly and evenly bedded in the foundation material.

Mud sills shall be not less than 30 × 30 centimeters (12" × 12") in squared cross-sectional dimensions and not less than one meter (3 feet) in length. They shall be spaced not more than 1.2 meters (4 feet) apart.

Log or timber mud sills shall be leveled to fit the first tier resting upon them. In no case shall there be less than 650 square centimeters (100 square inches) of flat surface between the face log and each mud sill.

Foundation material shall be thoroughly tamped around all mud sills.

(3) FACE LOGS OR TIMBERS

The logs or timbers in the base tier and in alternate tiers above the base shall be as long as practicable and preferably shall extend the full length of the face. In

intermediate tiers they may have a length of not less than 2.5 meters (8 feet), arranged to break joints. Crib faces shall be laid solid or with spacers, as indicated on the Plans.

All framed surfaces shall receive a heavy coat of approved preservative at the time of assembling.

Care shall be exercised in the erection of all cribs to produce a true face, as shown on the Plans, and all timbers or logs in faces shall be horizontal.

(4) TIES

The length of ties shall be sufficient to develop the required anchorage against overturning, and in no case shall the length of tie extending into the fill be less than two-thirds of the height of fill above the tie in question.

Ties shall be anchored to the face walls by framing, either dove-tailed or by sufficient projection beyond the face of the crib to form the proper anchorage. Ties shall be anchored at the fill end to cross pieces fastened to them at right angles by drift-bolts or other suitable means.

Ties shall be spaced not more than 2.5 meters (8 feet) center-to-center in any horizontal tier, and shall be staggered with the next adjacent tier of ties. Tiers of ties shall be not more than 1 meter (3 feet) apart vertically.

(5) FASTENING

Each successive tier of logs or timbers shall be drift-bolted to the one upon which it rests by drifts not less than 19 millimeters (3/4 inches) in diameter and of sufficient length to extend through 2 tiers and not less than 10 centimeters (4") into the third tier.

Drift-bolts shall be staggered and not more than 2.5 meters (8 feet) center-to-center in each tier.

All end joints and splices shall be half-lapped for 25 centimeters (10") and drifted at the center.

Before assembling, all framed joints in contact shall be heavily coated with an approved preservative.

522.05 FILLING

Filling inside and around cribs shall be placed to avoid distortion of the crib. Filling shall be placed in even, horizontal layers and compacted to prevent voids.

522.06 METHOD OF MEASUREMENT

Timber shall be measured for payment by the cubic meter for material remaining in the finished structure.

Logs shall be measured for payment by the linear meter for materials remaining in the finished structure.

Excavation for cribbing shall be measured for payment, as specified in Section 501.13.

Filling material for cribbing shall be measured for payment, in place, by the cubic meter.

522.07 BASIS OF PAYMENT

Timber will be paid for at the contract unit price per cubic meter. Logs will be paid for at the contract unit price per linear meter for each size specified.

Excavation will be paid for as specified in Section 501.14.

Filling material will be paid for at the contract unit price per cubic meter for crib-filling complete and in place.

SECTION 523 STRUCTURAL PLATE PIPES, PIPE ARCHES AND ARCHES

523.01 GENERAL

This work shall consist of fabrication, furnishing and erecting structural plate pipes, pipe arches and arches of the sizes, dimensions and thicknesses at locations designated on the Plans, in accordance with these Specifications and in reasonably close conformity with the lines and grades specified or ordered by the Engineer.

523.02 MATERIALS

Structural steel plates, bolts and nuts for pipe, pipe arches and arches shall conform to the requirements of AASHO M 167.

Structural aluminum-alloy plates, bolts and nuts for pipe, pipe arches and arches shall conform to the requirements of AASHO M 219.

Asphalt filler shall conform to the requirements of AASHO M 18, Grade A, or equivalent if approved by the Engineer.

523.03 BEDDING

The structure shall be bedded in an earth foundation of uniform density, carefully shaped to fit the lower plate or plates of the structure.

523.04 FOUNDATION

Where rock in either ledge or boulder formation is encountered, it shall be removed below the invert grade to a depth of 30cm (12") and replaced with granular backfill in such a manner as to provide a uniformly compacted earth cushion.

Where an unstable material is encountered, the unstable

material shall be removed for the depth and width shown on the Plans, or as directed by the Engineer, and replaced with granular material and compacted to the satisfaction of the Engineer.

523.05 CAMBER

The invert grade of the structure, when required, shall be cambered as shown on the Plans or as ordered by the Engineer.

523.06 ERECTION

Structural plate pipes, pipe arches and arches shall be erected in accordance with the Plans and detailed erection instructions. They may be assembled in their final location or adjacent to it and then placed on the prepared bed. Elongated pipe shall be installed with the longer axis vertical.

Steel bolts for structural plate sections shall be torqued during installation to 28 kilogram-meters (200 foot-pounds) plus or minus 14 kilogram-meters (100 foot-pounds). Aluminum bolts for structural plate sections shall be torqued during installation to 17 kilogram-meters (125 foot-pounds) plus or minus 3.5 kilogram-meters (25 foot-pounds). The hold-on period may vary from 2 to 5 seconds. Any nuts loosened by plates being drawn together shall be retightened. Bolts shall be of sufficient length to provide for a full nut.

The concrete footings for structural plate arches shall be constructed in accordance with the details on the Plans and the excavated areas shall be backfilled to the flow line before assembling the structural plate arch.

523.07 BACKFILLING

Granular material for backfilling of structural plate structures shall be placed within the limits shown on the Plans. The

structures shall be protected by sufficient cover before permitting heavy equipment to pass over them during construction.

Fill material shall be deposited evenly, and compacted on both sides of the pipe or pipe arch. The layers shall not exceed 15 cm (6 inches) in depth until at least the 3/4 point has been reached. Special care shall be taken to thoroughly tamp each layer for the width of the trench and above the trench for a distance each side of the pipe or pipe arch equal to the diameter of the pipe or span of the pipe arch to the density required for adjacent embankments. The fill shall continue uniformly on both sides until at least 1.2 meters (4 feet) of compacted material is obtained above the top of the structure or until subgrade is reached.

When backfilling arches, the material shall first be placed midway between the ends of the arch on both sides, forming as narrow a ramp as practical, by distributing the fill material around and over the arch in uniform layers. The backfill material shall be thoroughly compacted, preferably by mechanical tampers, as it is placed. After the ramp has been built over the top of the arch, the remainder of the backfill shall be deposited, widening the ramps uniformly both ways from the center to the ends and as evenly as possible on both sides of the arch, each layer conforming to the shape of the arch and thoroughly compacted as the work progresses.

523.08 DAMAGES TO GALVANIZED SECTIONS

Any place where the galvanizing has been removed from the metal shall be repaired by thoroughly cleaning the damaged areas with a wire brush and painting the damaged areas with two costs of zinc-rich paint.

523.09 METHOD OF MEASUREMENT

The quantity to be measured for payment shall be on a unit basis for each plate structure shown on the Plans or specified in the contract.

523.10 BASIS OF PAYMENT

The accepted work will be paid for at the contract price bid for each structure, which price shall be full compensation for furnishing, fabricating, transporting, handling and assembling the structure and furnishing of all labor, tools, equipment, field painting and incidentals necessary to complete the work. The price shall also include furnishing and placing the galvanized bearing shapes used in the construction of metal plate arches.

Excavation, granular backfill and riprap will be paid for under their respective items.

SECTION 524 WEARING SURFACES

524.01 DESCRIPTION

Separate wearing surfaces, when required, shall conform to details shown on the Plans, and construction shall conform to all applicable Subsections of Section 504 and 505 for Portland cement concrete wearing surfaces and to all applicable Subsections of Section 400 for bituminous concrete-wearing surfaces.

524.02 METHOD OF MEASUREMENT

Unless otherwise specified, wearing surface materials will be measured for payment as specified in Sections 504.34 and 505.09 for Portland cement concrete-wearing surfaces and Section 400 for bituminous concrete-wearing surfaces.

524.03 BASIS OF PAYMENT

The accepted quantities of wearing surfaces will be paid for at the contract unit price as specified on the Plans or in the Proposal, and shall include compensation for all equipment, tools, materials, labor surface finishing and all other items of expense to complete the work shown on the Plans. Reinforcing, if required, will be paid for separately.

SECTION 525 ELASTOMERIC BEARINGS

525.01 DESCRIPTION

Elastomeric bearings as herein specified shall include plain bearings (consisting of elastomer only) and laminated bearings (consisting of layers of elastomer restrained at their interfaces by bonded laminates).

525.02 MATERIALS

The elastomer portion of the elastomeric compound shall be 100% virgin natural polyisoprene (natural rubber) meeting the requirements of Table A, or 100% virgin chloroprene (neoprene) meeting the requirements of Table B, as specified by the Engineer. Compounds of nominal hardness between the values shown may be used and the test requirements interpolated. When test specimens are cut from the finished product, a 10% variation in "Physical Properties" will be allowed.

(See tables on following pages)

TABLE A

ASTM Standard	Physical Properties	50 Duro	60 Duro	70 Duro
	Hardness ASTM D2240	50±5	60±5	70±5
	Tensile strength, min. psi ASTM D 412	2500	2500	2500
	Ultimate elongation, min. %	450	400	300
	Heat Resistance			
D573 70 hr 70°C a (158 F)	Change in durometer hardness, max. points	+10	+10	+10
	Change in tensile strength, max. %	—25	—25	—25
	Change in ultimate elongation, max. %	—25	—25	—25
	Compression Set			
D395 Method B	22 hours a 158 F, max. %	25	25	25
	Ozone			
D1149	25 pphm ozone in air by volume, 20% strain 100 F±2 F, 48 hours mounting procedure D518, Procedure A	No Cracks	No Cracks	No Cracks
	Adhesion			
D429,B	Bond made during vulcanization, lbs. per inch	40	40	40
	Low Temperature Test			
ASTM D 746 Procedure B	Brittleness at —40.C(-40F)	No Failure	No Failure	No Failure

TABLE B

ASTM Standard	Physical Properties	50 Duro	60 Duro	70 Duro
	Hardness ASTM D 2240	50±5	60±5	70±5
	Tensile strength, min. psi ASTM D 412	2500	2500	2500
	Ultimate elongation, min. %	400	350	300
	Heat Resistance			
D573 70 hr. @100°C (212F)	Change in durometer hardness, max. points	+15	+15	+15
	Change in tensile strength, max. %	−15	−15	−15
	Change in ultimate elongation, max. %	−40	−40	−40
	Compressive Set			
D395 Method B	22 hours @ 100°C(212F), max. %	35	35	35
	Ozone			
D1149	100pphm ozone in air by volume, 20% strain 38°C±1° (100F±2F), 100 hours mounting procedure D518, Procedure A	No Cracks	No Cracks	No Cracks
	Adhesion			
D429,B	Bond made during vulcanization lbs. per inch	40	40	40
	Low Temperature Test			
ASTM D 746 Procedure B	Brittleness at −40°C(−40°F)	Duro No Failure	No Failure	No Failure

Laminates shall be rolled mild-steel sheets conforming to AASHO M 183 (ASTM A 36) or A 245, Grade C or D, unless otherwise specified by the Engineer.

525.03 MANUFACTURING REQUIREMENTS

Plain bearings may be molded individually, cut from previously molded strips or slabs, or extruded and cut to length. Cut edges shall be at least as smooth as ANSI 250 finish. Unless otherwise shown on the Plans, all components of a laminated bearing shall be molded together into an integral unit, and all edges of the nonelastic laminations shall be covered by a minimum of 3mm (1/8 inch) of elastomer, except at laminate-restraining devices and around holes that will be entirely closed on the finished structure.

525.04 METHOD OF MEASUREMENT

525.05 BASIS OF PAYMENT

Unless otherwise specified, no separate measurement or payment for elastomeric bearings will be made, and the furnishing and placing of them shall be considered incidental to the placement of the beams.

SECTION 526 CONSTRUCTION OF TUNNEL USING STEEL TUNNEL LINER PLATES

526.01 SCOPE

These Specifications are intended to cover the installation of tunnel liner plates in tunnels constructed by conventional tunnel methods. For the purposes of these Specifications, tunnels excavated by full face, heading and bench, or multiple drift procedures are considered conventional methods. Liner plates used with any construction procedure utilizing a full or partial shield, a tunneling machine or other piece of equipment which will exert a force upon the liner plates for the purpose of propelling, steering or stabilizing the equipment are considered special cases and are not covered by these Specifications.

526.02 DESCRIPTION

This item shall consist of furnishing cold-formed, steel-tunnel liner plates conforming to these Specifications and of the sizes and dimensions required on the Plans and installing such plates at the locations designated on the Plans, by the Engineer and in conformity with the lines and grades established by the Engineer. The completed liner shall consist of a series of steel liner plates assembled with staggered longitudinal joints. Liner plates shall be fabricated to fit the cross-section of the tunnel. Liner plates herein described must meet the Sectional Properties—thickness, area and moment of inertia—as listed in Article 1.13.9 of the Standard Specifications for Highway Bridges.

All plates shall be connected by bolts on both longitudinal and circumferential seams or joints and shall be so

fabricated as to permit complete erection from the inside of the tunnel.

Grout holes 5cm (2 in) or larger in diameter shall be provided as shown on the Plans to permit grouting as the erection of tunnel-liner plates progresses.

526.03 FORMING AND PUNCHING OF LINER PLATES

All plates shall be formed to provide circumferential flanged joints. Longitudinal joints may be flanged or of the offset lap-seam type. All plates shall be punched for bolting on both longitudinal and circumferential seams or joints. Bolt spacing, in circumferential flanges shall be in accordance with the manufacturer's standard spacing, and shall be a multiple of the plate length so that plates having the same curvature shall be interchangeable and will permit staggering of the longitudinal seams. Bolt spacing at flanged longitudinal seams shall be in accordance with the manufacturer's standard spacing. For lapped longitudinal seams, bolt size and spacing shall be in accordance with the manufacturer's standard but not less than that required to meet the longitudinal seam-strength requirements of Article 1.13.4 of the Standard Specifications for Highway Bridges.

526.04 INSTALLATION

All liner plates for the full length of a specified tunnel shall be of one type only, either the flanged or the lapped-seam type of construction.

Liner plates shall be assembled in accordance with the manufacturer's instructions.

Coated plates shall be handled in such a manner as to prevent bruising, scaling, or breaking of the coating. Any

plates that are damaged during handling or placing shall be replaced by the Contractor at his expense, except that small areas with minor damage may be repaired by the Contractor as directed by the Engineer.

When, and as designated by the Engineer, voids occurring between the liner plate and the tunnel wall shall be force-grouted, the grout shall be forced through the grouting holes in the plates with such pressure that all voids will be completely filled.

Full compensation for back-packing or grouting shall be considered as included in the contract price paid for tunnel, and no separate payment will be made therefor.

526.05 METHOD OF MEASUREMENT

The length of tunnel to be paid for will be the length measured on the tunnel-liner plate invert in linear meters.

526.06 BASIS OF PAYMENT

Payment for each size of tunnel as determined under measurement shall be at the contract unit prices per linear meter bid for the various sizes, which payment shall include full compensation for furnishing all labor, materials, tools, equipment and incidentals to complete this item, including removal and disposal of material resulting from the excavation of the bore and force-grouting voids.

SECTION 527 TEMPORARY BRIDGES

527.01 GENERAL

This work shall consist of the construction, maintenance and removal of a temporary structure, its substructure and approaches, with warning signs, barricades and lights which may be required for the safety and convenience of the public, all in accordance with these Specifications and at the location designated on the Plans or as ordered by the Engineer.

527.02 MATERIALS

The Contractor may choose any material or combination of materials, meeting the approval of the Engineer, for constructing a temporary bridge and its approaches.

527.03 CAPACITY

The capacity of all temporary bridges to carry vehicular traffic shall meet the legal loads permitted under law for the particular route on which the bridge is located. The capacity of footbridges shall be 300 kgs per square meter (60 pounds per square foot) of floor surface, and the combined capacity of vehicular and pedestrian bridges shall be a combination of the above loadings. Detail drawings of the proposed bridge shall be submitted for approval by the Engineer prior to starting work on this item. Such approval shall not relieve the Contractor of any responsibility.

The waterway opening shall be adequate to handle the largest discharge anticipated during the period of use of the temporary bridge.

527.04 STRUCTURES

When a one-way bridge is specified, the clear width between faces of curbs shall be a minimum of 4.2 meters (13.8 feet). When a two-way bridge is specified, a clear width of 7.5 meters (24.6 feet) shall be furnished, unless otherwise shown on the Plans or directed by the Engineer. Bridges for pedestrian traffic only shall have a minimum clear width of 1.25 m (4 feet). Combined vehicular and pedestrian bridges shall maintain the minimum widths as given above.

Guard curbs having a minimum height of 30cm (12") shall be securely fastened on each side of a structure carrying vehicular traffic.

Guard rails meeting the approval of the Engineer shall be constructed along each side of the bridge, and, in the case of combined vehicle and pedestrian bridge, guard rail shall be constructed between the sidewalk and roadway portions of the structure.

527.05 APPROACHES

Approaches shall be constructed with suitable earthwork material and properly compacted to carry the traffic load for which the temporary bridge is designed. The grade and alignment of the approaches shall safely accommodate traffic and be satisfactory to the Engineer.

For one-way temporary bridges, a suitable turnout shall be provided at each end of the bridge.

527.06 MAINTENANCE

The Contractor shall maintain each temporary bridge and

its approaches, warning signs, lights and other safety devices to the satisfaction of the Engineer.

527.07 LIABILITY

The Contractor shall assume all liability for the structure, the approaches and warning devices to insure the safe use of the facility by the traveling public.

527.08 METHOD OF MEASUREMENT

The quantity to be measured for payment will be on a unit basis for each temporary bridge of the type specified, constructed and accepted in the work.

527.09 BASIS OF PAYMENT

The accepted quantity will be paid for at the contract lump-sum price for each temporary bridge of the type specified, which price shall be full compensation for furnishing, tranporting, handling, placing, maintaining and removing the bridge and approaches and furnishing all labor, tools, equipment, materials and incidentals necessary to complete the work.

SECTION 550 PORTLAND CEMENT CONCRETE PAVEMENT

550.01 DESCRIPTION

This work shall consist of constructing a pavement of Portland cement concrete on a prepared subbase as specified in these Specifications and the Special Provisions.

Unless otherwise provided, pavement shall be constructed of Class X concrete and shall conform to the provisions of Section 504. Subbase for Portland Cement Concrete Pavement shall be in accordance with the Provisions of Section 300. The subbase shall be thoroughly wet just before placing concrete

At the option of the Contractor, concrete pavement may be constructed with equipment utilizing stationary side forms or by the use of slip-form paving equipment.

550.02 WATER SUPPLY

Water for mixing concrete shall meet the requirements of Section 504. Water for wetting subbase and for curing concrete shall meet the requirements of Section 307.

Before placing pavement the Contractor shall develop a sufficient supply of water and have it available throughout the work. An inadequate water supply will be considered sufficient cause for delaying the start of, or stopping the mixing operations. In case of a deficiency of water, the requirements for wetting the subbase and curing the concrete already placed shall have priority over mixing.

550.03 SIDE FORMS

Side forms shall conform to the following :

(1) SIDE-FORM CONSTRUCTION

Metal side forms shall be used exclusively and shall weigh,

not including stakes, not less than 27 kg per meter (18 lbs per ft.) for pavements less than 22 cm (9 inches) thick; not less than 30 kg per meter (20 lb per ft) for pavements between 22 & 25 cm, (9 & 10 in) thick; and not less than 33 kg per meter (22 lb per ft) for pavements more than 25 cm (10 in) thick.

Side forms shall be of such section and of sufficient rigidity, both in the form and in the interlocking connection with the adjoining forms, that springing will not occur under the weight of the paving equipment nor from the pressure of the concrete when placed. The Contractor shall provide sufficient forms so that there will be no delay in placing the pavement.

Side-form sections shall be straight, free from warps, bends, indentations or other defects. Defective forms shall be removed from the work. Before placing side forms, the underlying material shall be at the proper grade. Side forms shall have full bearing upon the foundation throughout their length and width and shall be placed to the required grade and alignment of the edge of the finished pavement. They shall be so supported during the entire operation of placing, compacting and finishing the pavement that they will not deviate vertically at any time more than 3mm (0.01 ft) from the grade established by the Engineer.

The maximum vertical deviation of the top of any side form, including joints, shall not exceed 3mm (0.01 ft) from a 3-meter (10-foot) straightedge, nor shall the inside face vary more than 6mm (0. 02 ft) from a 3-meter (10-foot) straightedge. Stake pockets and interlocking devices shall be in such condition that they will prevent movement of the form.

Side forms shall be staked firmly by means of steel stakes

at each end of the section, and at intermediate points not more than 1.5 meters (5 feet) apart; and shall be so designed that stakes may be driven through the base of the forms. Forms shall be provided with means for locking stakes in position. Side-form sections shall be laid with an expansion gap of approximately 3mm (0.01 ft). The stakes used in staking side forms shall be of sufficient length so that the side forms shall be held firmly in place. Any lateral movement of forms greater than 6mm (0.02 ft), while supporting moving equipment, shall be considered as evidence that the steel stakes do not hold the side forms firmly in place, and longer stakes shall be provided by the Contractor at his expense.

Immediately in advance of placing pavement and after all subgrade operations are completed, side forms shall be trued and maintained to the required line and grade for a distance sufficient to prevent delay in placing the pavement.

Side forms shall remain in place until the day after placing the pavement, and in all cases until the edge of the pavement no longer requires the protection of the forms.

Side forms shall be thoroughly cleaned and oiled after they have been stripped and shall be oiled again just before concrete is placed against them.

(2) SLIP-FORM CONSTRUCTION

Slip-form paving equipment shall be equipped with traveling side forms of sufficient dimensions, shape and strength to support the concrete for a sufficient length of time during placement to produce pavement of the required cross-section.

No abrupt changes in longitudinal alignment of the pavement

will be permitted. The horizontal deviation shall not exceed 3cm (0.10 ft) from the alignment established by the Engineer.

550.04 GRADE TOLERANCE

The subbase to receive concrete pavement, immediately prior to placing, shall conform to the compaction and elevation tolerances specified for the material involved, and shall be free of loose or extraneous material.

550.05 REINFORCEMENT

Concrete pavement shall be reinforced at structure approaches and other locations as shown on the Plans or directed by the Engineer. Reinforcement shall conform to the provisions of Section 505.

505.06 MIXING AND TRANSPORTING

Mixing and transporting shall conform to the provisions of Section 504.

550.07 PLACING

The Contractor shall make adequate advance arrangements for preventing delay in delivery and placing of the concrete. An interval of more than 45 minutes between placing of any 2 consecutive batches or loads will constitute cause for stopping paving operations, and the Contractor shall make a contact joint at his expense, at the location and of the type directed by the Engineer, in the concrete already placed.

Unless otherwise specified in these Specifications or in the Special Provisions, concrete pavement shall be placed in traffic-lane widths separated by contact joints, as shown on the Plans, or at the option of the Contractor the concrete pavement may be placed monolithic, two or more traffic-lanes

wide without a contact joint, but with a longitudinal-weakened plane joint at each traffic-lane line.

All concrete shall be used while fresh. Retempering any concrete with water will not be permitted.

Any concrete showing improper proportions of materials, including water, shall not be used in the pavement, and any such unsatisfactory concrete shall be removed and disposed of by the Contractor at his expense.

The Contractor shall protect freshly placed concrete from damage by any cause, and any damage shall be repaired by the Contractor at his expense.

Expansion joint material shall be protected while depositing fresh concrete adjacent thereto.

Concrete work shall be adequately barricaded in all directions to protect the work.

550.08 SPREADING, COMPACTING AND SHAPING

Spreading, compacting and shaping shall conform to the following :

(1) SIDE-FORM CONSTRUCTION

The concrete shall be distributed uniformly with a mechanical spreader.

The spread concrete shall be vibrated, screeded and tamped by a machine or machines.

The number and capacity of machines furnished shall be adequate to perform the work required at a rate equal to the progress of the mixer. Any delay in excess of 15 minutes in vibrating, screeding and tamping shall constitute cause for stopping the mixer until the machines performing such work are again in proper position in the paving train.

The concrete, for its full width, shall be vibrated by

means of surface vibrators with internal vibrators adjacent to each longitudinal edge or by some other method of vibration that produces equivalent results without segregation. The rate of vibration shall be not less than 3,500 vibrations per minute for surface vibrators and 5,000 vibrations per minute for internal vibrators. The amplitude of vibration shall be sufficient to be perceptible on the surface of the concrete more than 30 cm (1 ft) from the vibrating element.

Vibrators shall not rest on new pavements or side forms. Power to the vibrators shall be so connected that vibration will cease when the forward or backward motion of the machine is stopped.

Screeding and tamping shall be performed with two reciprocating screeds between which is mounted a tamping bar, actuated at each end by positive displacement devices.

When concrete is being placed adjacent to an existing pavement, that part of the equipment which is supported on the existing pavement shall be equipped with protective pads on crawler tracks or rubber-tired wheels on which the bearing surface shall be offset to run a sufficient distance from the edge of the pavement to avoid breaking or cracking the pavement edge.

Screeding and tamping shall be performed by making at least 2 complete passes over the entire area of the pavement. On the first pass, the tamper shall be adjusted to produce the proper tamping action and the tamping bar shall not be operated during the second pass unless otherwise directed by the Engineer. The screeds shall be adjusted to an elevation slightly above grade so that, when properly consolidated and finished, the completed surface of the pavement will be at the established grade, true to the cross-

section shown on the Plans and free from porous areas. The tops of the forms or the adjacent pavement and the contact surface of the crawler tracks or wheels shall be kept clean by effective devices attached to the machine. The travel of the machine shall be maintained true without lift, wobble or other variation which would have an adverse effect on precision screeding. The machine shall be of ample strength to withstand severe use and shall be fully and accurately adjustable to compensate for wear. During each pass of the machine, a roll of concrete shall be maintained ahead of the front screed for the entire width of pavement being placed and, except when making an expansion joint, the machine shall not be operated beyond that point where the roll of concrete can be maintained. The intent of this Specification is that the equipment shall produce a surface requiring minimum cutting during the floating and final finishing, as specified in Sections 550.10 and 550.11.

Concrete required to be placed in widths less than a traffic lane may be compacted and shaped by a powered, mechanical, compacting and shaping machine, supplemented by hand methods where necessary. Where hand compaction is performed, the tamper shall be constructed of a heavy plank whose length exceeds the width of pavement by a minimum of 30cm (one foot). It shall be shod with a heavy strip of metal for a tamping surface and shall be stiffened adequately to maintain the required shape during use. For concrete production in excess of 30 cubic meters (40 cubic yards) per hour, and where all compaction is performed by hand methods, not less than two tampers shall be used.

The hand tamper shall be used with a combined tamping and longitudinal motion, raising it from the side form and

dropping it to consolidate the concrete. A surplus of concrete shall be kept in front of the hand tamper and tamping shall continue until the required cross-section is obtained and the mortar flushes slightly to the surface.

Where hand compaction is performed on grades in excess of five percent, a light strike board constructed similar to the heavy tamper shall be used following the heavy tamper or tampers to correct any displacement caused by flow of the concrete.

(2) SLIP-FORM CONSTRUCTION

Slip-form paving equipment shall spread, consolidate, screed and float-finish the freshly placed concrete in such a manner that a minimum of finishing with a hand float, as specified in this Section, will be required to provide a dense and homogeneous pavement.

The concrete shall be distributed uniformly into final position by the slip-form paver without delay.

The concrete for the full paving width shall be effectively consolidated by internal vibration with transverse vibrating units or a series of longitudinal vibrating units. If series of longitudinal vibrating units are used, they shall be spaced at intervals not to exceed 75cm (2.5 ft) measured center-to-center.

The term "internal vibration" specified in the above paragraph means vibration by means of vibrating units located within the specified thickness of pavement section and a minimum distance ahead of the screed equal to the pavement thickness.

The rate of vibration of each vibrating unit shall be not less than 5,000 vibrations per minute, and the amplitude of vibration shall be sufficient to be perceptible on the

surface of the concrete along the entire length of the vibrating unit and for a distance of at least one foot therefrom.

When concrete is being placed adjacent to an existing pavement, that part of the equipment which is supported on the existing pavement shall be equipped with protective pads on crawler tracks or rubber-tired wheels on which the bearing surface shall be offset to run a sufficient distance from the edge of the pavement, to avoid breaking or cracking the pavement edge.

At locations inaccessible to slip-form paving equipment, concrete pavement shall be placed by methods and equipment conforming to the requirements for placing concrete in widths less than a traffic lane, as specified in Section 550.08 (1). At such locations, the use of stationary side forms conforming to Section 550.03(1) will be required. Locations inaccessible to the slip-form paving equipment shall be finished by the hand-float method and equipment specified in Section 550.10 (1)(b).

550.09 JOINTS

Joints in pavement will be designated as longitudinal and transverse contact joints, transverse expansion joints and longitudinal and transverse weakened-plane joints, and shall be constructed as shown on the Plans and in accordance with the following provisions.

All transverse joints shall be constructed at the angle to the centerline of the pavement shown on the Plans, and the faces of all joints both transverse and longitudinal shall be normal to the surface of the pavement.

All joints shall be clean and free of all foreign material

after completion of shoulder work and prior to acceptance of the contract.

Reinforcing-steel at joints shall conform to the requirements of Section 505. Every other bar shall be bent at right angles about 10cm (4 inches) from one end to form a support resting on the subgrade.

Tie bars in existing pavement for longitudinal joints shall be straightened before placing fresh concrete against the joint. Full compensation for straightening existing tie bars shall be considered as included in the contract price paid per square meter for concrete pavement, and no additional compensation will be allowed therefor.

(1) CONTACT JOINTS

Contact joints are those made by placing fresh concrete against hardened concrete.

(2) WEAKENED PLANE JOINTS

Weakened plane joints shall be formed by cutting a groove in the pavement with a power-driven saw at the locations shown on the Plans. The grooves shall be cut to a minimum depth of 5cm (2 in), and the width shall be the minimum width possible with the type of saw being used, but in no case shall the width exceed 6mm ($\frac{1}{4}$ in). Every fourth-planned transverse-weakened plane joint in the initial lane of concrete, and also the first joint immediately after the transverse contact joint shall be sawed within 24 hours after the concrete has been placed, the exact time to be determined by the Engineer. Every second-planned transverse-weakened plane joint shall be sawed within 48 hours after placing the concrete, the exact time to be determined by the Engineer. The remaining longitudinal and transverse-

weakened plane joints may be sawed at such time, after 24 hours, as the Contractor may elect, except they shall be completed before placing concrete in succeeding adjacent lanes and before any traffic is allowed to use the pavement.

In succeeding lanes of concrete pavement the transverse joints opposite those which have opened in the initial lane shall be sawed within 24 hours after the concrete has been placed, the exact time to be determined by the Engineer; but in all cases not more than 3 consecutive-planned transverse-weakened plane joints shall be omitted. The remaining longitudinal and transverse-weakened plane joints may be sawed at such time, after 24 hours, as the Contractor may elect, except they shall be completed before placing concrete in the succeeding adjacent lane and before permitting the Contractor's traffic or public traffic to use the pavement.

No sawing shall be done where unplanned transverse cracks exist. If an unplanned transverse crack falls within 1.5m (5 ft.) of the location of a proposed sawed joint, the sawed joint shall be omitted. Joints sawed in violation of the provisions in this paragraph will not be measured for payment.

At the option of the Contractor, transverse-weakened plane joints may be formed by placing a continuous strip of plastic or other material which will not react adversely with the chemical constituents of the concrete or bond with the concrete. The strip shall have a minimum thickness of 0.3mm (0.013 inch) and a width of 5cm (2 in). After placement, the vertical axis of the joint material shall be within 10 degrees of a plane normal to the surface of the pavement. The top of the strip shall not be above nor

more than 7mm (0.03 foot) below the finished pavement surface. Final alignment of the strip shall conform to that shown on the Plans for transverse-weakened plane joints and shall not vary more than 3cm (0.1 ft) from the edge of a 3-meter (10 ft) straightedge.

The strip shall be placed by means of a mechanical installation device which shall vibrate the plastic concrete sufficiently to cause an even flow of concrete about the joint material. The concrete shall be free of segregation, rock pockets or voids, and the finished concrete surface on each side of the joint shall be in the same plane. Splices in the joint material will not be permitted.

The Contractor shall maintain a stand-by multiple-bladed power joint saw, in operating condition, on the Project at all times while concrete-paving operations are under way, regardless of the type of weakened plane joint being constructed.

At the option of the Contractor, longitudinal-weakened plane joints at traffic-lane lines in multi-lane monolithic concrete pavement may be formed by placing a continuous strip of plastic or other material which will not react adversely with the chemical constituents of the concrete. The joint insert material shall be of such width and character that when placed vertically in the concrete it will not bond with the concrete and will form an effective weakened plane joint of 5cm (2 in) minimum depth. The joint material shall be inserted with a mechanical device that places the material in a continuous strip, except where intervening structures break the continuity of paving. Splices in the joint material will be permitted, providing they are effective in maintaining the continuity of the joint material as placed. The joint material

shall be placed in such manner that the top of the strip is not more than 3mm (0.01 ft) below the finished surface of the concrete. The joint material shall not be deformed from a vertical position, either in the installation or in subsequent finishing operations performed on the concrete. The alignment of the finished joint shall be uniformly parallel with the centerline of the pavement, and shall be free of any local irregularity which exceeds 12mm (0.04 ft), measured by a 3-meter (10-foot) straightedge, except for normal curvature of centerline alignment. The mechanical installation device shall vibrate the concrete during placing the strip sufficiently to cause the concrete to flow evenly about the joint material producing homogeneous concrete free of segregation and rock pockets or voids.

(3) TRANSVERSE EXPANSION JOINTS

Transverse expansion joints shall be formed at structure approaches as shown on the Plans and as specified in this Section.

Transverse expansion joints shall be formed by means of premolded expansion-joint filler strips conforming to the provisions of ASTM Designation D 1752, AASHO M 153, and placed as specified in this Section. The joint strips shall be firmly supported in position by metal holders and end supports. The supports shall be held firmly in position and shall remain in place after completion of the pavement.

The metal holders shall be fabricated of sheet steel not less than 1.5mm ($\frac{1}{16}$ in) in thickness. They shall be in the form of a deep channel, extending down on both sides of the joint strip to a depth of not less than 12cm ($4\frac{1}{2}$ inch),

They shall be slotted and cut away as necessary to allow the concrete to make contact with the joint strip at close intervals. The ends of the holders shall be spread to admit the end supports.

During placing and compacting the concrete, the joint holder and end supports shall be so secured as to insure against movement of the joint strip and to keep the top edge of the joint strip approximately 1 cm ($\frac{1}{2}$ in) below the surface of the finished pavement. After the concrete has been placed and compaction completed, the metal holder may be removed and a suitable shallow metal channel substituted therefor which shall fit snugly over the top edge of the joint strip and shall remain there until the joint is edged.

Filler shall extend the full width of the concrete being placed, less 1 cm ($\frac{1}{2}$ in), and after the side forms have been removed, any concrete which has flowed around the ends of the joint filler shall be removed.

550.10 PRELIMINARY FINISHING

Unless adequate lighting facilities are provided by the Contractor, the placing of concrete pavement shall cease at such time that finishing operations can be completed during daylight hours.

Necessary workmen shall remain at work long enough to complete the finishing and curing of the pavement.

In case fine cracks or hair checks appear in newly placed concrete before it is thoroughly set, water shall be applied to the concrete surface, using a nozzle that so atomizes the flow that a mist is formed, until the finishing operations are completed and the curing is applied.

(1) SIDE-FORM FINISHING

After spreading and compacting and while the mortar is still workable, the concrete shall be given a preliminary finish by any one of the following float methods.

(a) MACHINE-FLOAT METHOD

The surface of the concrete shall be finished smooth and true to grade by means of a machine float.

The number and capacity of machines furnished shall be adequate to perform the work required at a rate equal to the progress of the mixer. Any delay in excess of 30 minutes in performing the preliminary finishing shall constitute cause for stopping the mixer until the machine or machines performing such work are again in proper position in the paving train.

The machine float shall be self-propelled and designed to run on the side forms or adjacent lanes of concrete. When the machine float runs on the adjacent pavement, the pavement shall be protected as specified in Section 550.08. The aggregate length of the floats in contact with the surface shall be at least four times the width of the concrete being finished. The floats shall be of such length and shall be set at angles with the axis of the machine so as to effectively spread and smooth the surface of the concrete, eliminating unevenness and producing a surface texture of uniform appearance. The machine shall be equipped with a suitable full-width metal roller placed at one end ahead of all the floats, which roller will have the effect of more fully embedding the coarse aggregate in the cement mortar and of bringing a slight excess of mortar to the surface of the concrete. All floats shall

be constructed of hardwood or steel. The roller and floats shall be equipped with adjusting devices which will permit the independent adjustment of each to the required finished cross-section of the pavement and which will permit the lowering and raising of the floats, both individually and as a unit. The machine shall be capable of operating at speeds adequate to perform all finishing operations necessary. The speed of operation shall be such as to give the best results.

(b) HAND-FLOAT METHOD

The surface of the concrete shall be finished smooth and true to grade with 2 suitable floats 30cm (12 in) wide and 3.5 meters (12 feet) long with edges of bottom surfaces rounded, and equipped with plow handles of such length that the operators may stand upright while working from bridges.

The floats shall be operated longitudinally over the entire surface of the pavement and with a combined longitudinal and transverse motion, passing slowly from one edge of the pavement to a point past the center a sufficient number of times to smooth all ridges and fill all depressions, until the float on its last passage shall show contact with the concrete throughout its entire length and width. The float shall rest flat on the surface of the concrete throughout this operation, except that if a ridge be encountered which cannot be eliminated by floating, the float may be tilted so that its edge will operate as a screed to remove the excess concrete, after which the surface shall be refloated with the float in the flat position. Depressions appearing after the initial passage of the float shall be filled with additional concrete before the final passage.

The float shall be operated by men working on bridges that span the full width of pavement. In moving forward with the float, each successive position shall overlap the preceding position by one-half of the length of the float.

(2) SLIP-FORM FINISHING

After the concrete has been given a preliminary finish by means of finishing devices incorporated in the slip-form paving equipment, the surface of the fresh concrete shall be checked by the Contractor with a straightedge not less than 3 meters (10 feet) in length. High areas indicated by the straightedge shall be removed by the hand-float method specified in Section 550.10(1)(b). Each successive check with the straightedge shall lap the previous check path by at least one-half of the length of the straightedge.

Any edge slump of the pavement, exclusive of edge rounding, in excess of 6mm ($\frac{1}{4}$ in) shall be corrected before the concrete has hardened.

550.11 FINAL FINISHING

After the preliminary finishing has been completed, the edges of an initial pavement lane shall be rounded to a 12mm ($\frac{1}{2}$ in) radius. Transverse contact joints, expansion joints and joints adjacent to an existing pavement shall be rounded to a 6mm ($\frac{1}{4}$ in) radius.

In advance of curing operations, the pavement shall be textured with a drag strip of burlap or other device which will produce scoring parallel to the centerline. The burlap drag shall consist of one or more pieces of burlap fastened to a cross-member riding on the subgrade or side forms by means of wheels or skids to form a continuous strip of burlap the full

width of the pavement. Drags shall be maintained clean and free from encrusted mortar. Drags that cannot be cleaned shall be discarded and new drags substituted.

When a straightedge 3 meters (10 feet) long is laid on the finished pavement in a direction parallel to the centerline, th surface shall not vary more than 6mm ($\frac{1}{4}$ in) from the lower edge of the straightedge. The transverse slope of the pavement shall be uniform to a degree such that no depressions greater than 6mm ($\frac{1}{4}$ in) are present when tested with a straightedge 3 meters (10 feet) long laid in a direction transverse to the centerline. Upon completion of the pavement, any points that are high in excess of the tolerances set forth above shall be removed by grinding.

550.12 PROTECTION AND CURING

(1) MEMBRANCE

After the concrete has been finally finished and the free water has left the surface, the entire area of the pavement surface shall be sealed, by hand or machine spraying, using a uniform application of curing compound, specified in Section 504.22. The solution shall be applied in one or two operations as may be recommended by the manufacturer and as directed. If the solution is applied in two increments, the second application shall follow the first application within thirty minutes. The Contractor shall provide satisfactory equipment and means to properly control and assure the direct application of the curing solution on the pavement surface so the result is a uniform coverage in the pavement at the rate of 1 liter per 4m^2 (1 gallon per 150 Ft^2) of area. Satisfactory equipment and means to control and apply the curing solution shall be construed as being whatever appliances and methods

are needed to prevent the loss of any of the solution during the application, together with an approved means of measuring the quantity to be applied and to insure complete and uniform coverage of the pavement.

If rain falls on the newly coated pavement before the film has dried sufficently to resist damage, or if the film is damaged in any other way, the Contractor will be required to apply a new coat of material to the affected portions equal in curing value to that specified. All areas cut by finishing tools subsequent to the application of the curing solution shall immediately be given new applications at the specified rates.

The Contractor shall apply, on the job, sufficient burlap for the protection of the pavement in case of rain or breakdown of the spray equipment. In the event that hair-checking develops before the curing compound can be applied, the procedure shall be modified in the initial curing with wet burlap, cotton mats or other approved material, and shall be performed before the curing compound is placed.

(2) WET BURLAP OR COTTON MATS

Preliminary curing may be accomplished by covering the entire surface of the pavement with blankets of wetted burlap, cotton fabric or other material of highly absorptive quality, previously approved by the Engineer, laid directly upon the finished surface as soon after finishing as possible without marring the surface. The material shall be kept saturated in place for at least seventy two hours.

For completion of the curing, the mats used for the preliminary curing period may be left in place and kept saturated for ninety-six hours, or may be removed at the end of

thirty hours and immediately sealed with the curing compound specified in Section 504.22.

550.13 METHOD OF MEASUREMENT

(1) Portland cement concrete pavement shall be measured by area in square meters, and the area to be paid for shall be the number of square meters of concrete pavement of the specified thickness, completed and accepted, measured in place. The width for measurement will be the width from outside-to-outside of completed pavement, but not to exceed the width as shown on the Plans or as ordered by the Engineer. The length will be the actual length measured along the centerline of the pavement surface.

(2) Fillets for widened sections or at drainage structures and similar locations placed monolithic with the pavement will be measured and included as pavement. No deduction will be made for any fixture located within the limits of the pavement when such fixture has a surface area in the plane of the pavement surface of 1 sq meter (9 sq feet) or less.

(3) Pavement will be measured to the nearest one-tenth square meter.

(4) It is the intent of the Specifications that pavement shall be constructed strictly in accordance with the thickness shown on the Plans. The thickness of the pavement will be measured, and where any pavement is found not so constructed, such pavement may be paid for at a reduced unit price per square meter, or such pavement may be removed and replaced with satisfactory pavement.

(5) DEFICIENT THICKNESS

If so ordered, pavement thickness may be determined by cores taken from the completed pavement. Cores will be

taken, one for each 0.5 kilometer (.3 mile) of two-lane pavement in alternate lanes and at such other locations as the Engineer may direct. Pavement slabs which are deficient in thickness by more than 12mm ($\frac{1}{2}$ in) may, if so ordered, be removed and replaced at no cost to the HA.

If pavement slabs deficient in thickness by more than 12mm ($\frac{1}{2}$ in) are left in place, compensation for these sections shall not exceed fifty percent (50%) of the bid price. Pavement slabs deficient in thickness by more than 18mm (3/4 in) shall be removed and replaced at no expense to the HA. Deductions for deficiency in thickness are shown below :

DEFICIENT THICKNESS	PROPORTIONAL PART OF CONTRACT PRICE ALLOWED
3mm to 6mm (1/8 in to $\frac{1}{4}$ in)	90%
6mm to 12mm ($\frac{1}{4}$ in to $\frac{1}{2}$ in)	75%
12mm to 18mm ($\frac{1}{2}$ in to 3/4 in)	50%

In removing pavement that is deficient in thickness, the pavement shall be removed from the edge to a longitudinal joint, or between longitudinal joints and on each side of the deficient measurement until no portion of the exposed cross-section is more than 3mm (1/8 inch) deficient, except that in no instance shall there be less than 3 meters (10 feet) of pavement removed. If, in meeting the above requirements, there remain less than 1.5 meters (5 feet) of acceptable pavement between the section that has been removed and a transverse plane of weakness (contraction, expansion or construction joints), the Contractor shall remove the

pavement to the plane of weakness. The Contractor shall then replace with satisfactory pavement all of the pavement that has been removed. Deductions for deficient thickness will be included in the next monthly payment due the Contractor after the information becomes available.

(6) Material used as a foundation course for the concrete pavement will be measured in accordance with the item as bid and in agreement with the provisions of the Section pertaining to that material.

(7) Reinforcing steel, including dowels, tie bars and spacer bars in structure approaches or in other locations shown on the Plans or as directed by the Engineer will be measured for payment in accordance with the provisions of Section 505.

550.14 BASIS OF PAYMENT

The area of completed and accepted Portland cement concrete pavement, measured as provided with no additional compensation for excess thickness, shall be paid for at the contract unit price per square meter for concrete pavement with proper allowance made for any deductions for deficiency in thickness, which price and payment shall be full compensation for furnishing, hauling, preparing, placing, curing and protecting concrete and for all joint materials except dowels, tie bars, and spacer bars, and for all other operations necessary to complete the work.

Material used as a foundation course will be paid for as indicated in the Proposal form and in accordance with the applicable Section.

Reinforcing steel, including dowels, tie bars, and spacer bars, will be paid for in accordance with the provisions of Section 505.

TABLE OF CONTENTS
SECTION 600 MISCELLANEOUS CONSTRUCTION

SECTION	TITLE	PAGE
601	Culverts and Storm Drains	556
602	Manholes, Inlets and Catch Basins	563
603	Underdrains	568
604	Guard Rail	572
605	Fences	575
606	Sidewalks	578
607	Curb–Curb and Gutter	582

SECTION 601 CULVERTS AND STORM DRAINS

601.01 DESCRIPTION

This work consists of construction or reconstruction of culverts and storm drains, hereinafter referred to as "conduit", in conformity with the with the Plans and Specifications.

601.02 MATERIALS

Reinforced Concrete Pipe shall conform to the requirements of AASHO M 170 for the specified diameters and strength classes.

Non-Reinforced Concrete Pipe shall conform to the requirements of AASHO M 86 for the specified diameters and strength classes.

Vitrified Clay-Lined Reinforced Concrete Pipe shall meet the applicable requirements of AASHO M 170 and M 65. Liner or liner elements shall be clay or first quality, sound, thoroughly and perfectly burned, without warps, cracks or other imperfections, and fully and smoothly glazed.

Reinforced Concrete Arch Culvert, Storm Drain and Sewer Pipe shall conform to the requirements of AASHO M 206.

Reinforced Concrete Elliptical Culvert, Storm Drain and Sewer Pipe shall conform to the requirements of AASHO M 207.

Corrugated Iron or Steel Pipe and Pipe Arches shall conform to the requirements of AASHO M 36 for the specified sectional dimensions and thickness. Special sections, such as elbows and prefabricated flared-end sections, shall conform to the applicable reauirements of AASHO M 36.

Bituminous-Coated Corrugated Iron Steel Pipe and Pipe Arches shall conform to the requirements of AASHO M 190 for the specified sectional dimensions, thicknesses and type of bituminous coating. Coupling bands shall be fully coated with bituminous material. Special sections, such as elbows and

prefabricated flared-end sections, shall conform to the applicable requirements of AASHO M 190. When asbestos-bonded bituminous coating is specified, these requirements shall apply equally, and in addition, the special process of embedding asbestos fiber in the molten-metallic bonding medium shall be used to bond the bituminous coating.

Corrugated Aluminum-Alloy Culvert Pipe shall conform to the requirements of AASHO M 196 or AASHO M 211.

Bituminous-Coated Corrugated Aluminum-Alloy Culvert Pipe shall conform to the requirements of AASHO M 197 or M 211 and shall be coated with bituminous material conforming to the requirements of AASHO M 190. Coating and invert paving shall be the type specified.

Cast-Iron Culvert Pipe shall conform to the requirements of AASHO M 64 for the specified diameters and strength classes. Unless otherwise specified, either smooth, corrugated or ribbed pipe may be furnished.

Polyvinylchloride (PVC) Sewer and Drain Pipe shall conform to the requirements of ASTM D 2729, except wall thickness shall conform to ASTM D 2836, Table 4.

Vitrified Clay Pipe shall conform to the requirements of AASHO M 65 for the specified diameters and strength classes for the circular, unperforated pipe.

Asbestos Cement Pipe shall conform to the requirements of AASHO M 217 for the specified diameters and strength classes.

Joint Mortar shall consist of one part Portland cement and two parts approved sand with water as necessary to obtain the required consistency. All materials shall meet the requirements of Section 504. Mortar shall be used within 30 minutes after preparation.

Rubber Ring Gasket shall conform to the requirements of AASHO M 198.

Poured filler for joints shall conform to the requirements of AASHO M 173. Other types approved by the Engineer may be used.

601.03 EXCAVATION

Trenches shall be excavated in accordance with the requirements of Section 205.

The completed trench bottom shall be firm for its full length and width. Where required, in the case of drains, the trench shall have a longitudinal camber, as specified on the Plans.

Where conduits are to be placed wholly or partly in embankment fill, the excavation shall be made only after the embankment has been completed and compacted to a height of one meter (3 feet) above the top of conduit.

If it is impossible to provide 1 meter (3 feet) of cover above the conduit, the pipe may be laid with whatever cover can be achieved, and backfill shall be carried out following the provisions of Section 601.08.

If the conduit is designed to carry a stream, the pipe may be laid before any embankment is placed, even if this means the top of pipe extending above ground level. Backfill then will follow the provisions of Section 601.08.

601.04 BEDDING

The conduit bedding shall conform to one of the classes specified. When no bedding class is specified, the requirements for Class C bedding shall apply.

Class A bedding shall consist of a continuous concrete cradle conforming to the Plan details

Class B bedding shall be sand or selected sandy soil, all of which passes a 10-millimeter (3/8-inch) sieve, and not more

than 10 percent passes a No. 0.075 (No. 200) sieve. The layer of bedding material shall be 15cm (6 in) deep at the lowest point of the outside of the barrel of the conduit and shall be compacted and shaped to fit the conduit for at least 15 percent of its total height. Recesses in the trench bottom shall be shaped to accommodate the bell when bell and spigot-type conduit is used. After the pipe is laid and joints made, the bedding material shall be continued and compacted until it reaches at least half-way up the pipe.

Class C bedding shall be the same as Class B bedding above, except that the additional bedding material above the 15 percent point will not be placed.

601.05 LAYING CONDUIT

The conduit laying shall begin at the downstream end of the conduit line. The lower segment of the conduit shall be in contact with the shaped bedding throughout its full length. Bell or groove ends of rigid conduits and outside circumferential laps of flexible conduits shall be placed facing upstream. When possible, flexible conduit shall be placed with longitudinal laps or seams at the sides. No conduit shall be placed until a suitable outlet is provided.

Paved or partially-lined conduit shall be laid so that the longitudinal centerline of the paved segment coincides with the flow line. Elliptical conduit and circular conduit reinforced with other than a full circular cage or cages shall be installed so the orientation of a vertical plane through the longitudinal axis of the conduit does not vary more than 5 degrees from the design orientation.

601.06 JOINING CONDUIT

Rigid conduits may be of bell and spigot, or tongue and groove design unless one type is specified. Conduit sections shall

be joined so that the inner surfaces are reasonably flush and even, and the ends are joined as required.

Joints shall be made with (a) Portland cement mortar, (b) rubber gaskets, (c) oakum and mortar, or (d) oakum and joint compound, or (e) by a combination of these types.

Mortar joints shall be made with an excess of mortar to form a bead around the outside of the conduit, and shall be finished smooth on the inside. For poured joints, molds or runners shall be used to retain the poured grout or joint compound. Rubber-ring gaskets shall be installed so as to form a flexible watertight seal. Where oakum is used, the joint shall be calked with this material and then sealed with the specified material. Joints in concrete pipe should be thoroughly wetted before mortar or grout is applied.

When Portland cement mixtures are used, the completed joints shall be protected against rapid drying by suitable curing materials. Flexible conduits shall be firmly joined by coupling bands.

Conduit shall be inspected before any backfill is placed. Any pipe found to be materially out of alignment, unduly settled or damaged shall be taken up and relaid or replaced.

601.07 RELAID CONDUIT

The construction requirements herein shall equally apply in the case of relaid conduits. In addition, all conduit salvaged for relaying shall be cleaned of all foreign material prior to reinstallation.

601.08 BACKFILLING

After the conduit is installed, the trench shall be backfilled with selected material in accordance with Section 205.

When the top of the conduit is exposed above the top of

the trench, embankment material above the trench shall be placed and compacted for a width on each side of the conduit equal to at least twice the horizontal inside diameter of the conduit, or 4 meters (13 feet), whichever is greater. The embankment on each side of the conduit, for a distance equal to the horizontal inside-diameter of the conduit, shall be of the same material and compacted in the manner described for backfilling. The remainder of the fill material shall not contain stone in excess of 8 centimeters-(3-inch) diameter, or other objectionable material. Compaction shall be achieved as provided for backfill or by rolling. The embankment shall be placed and compacted simultaneously on both sides of the conduit for the full width of the roadbed up to an elevation 30 centimeters (1 foot) above the top of the conduit. Above this elevation, embankment shall be placed and compacted in normal maner, except where the imperfect trench method is prescribed. All conduit, after being bedded and backfilled as specified in this section, shall be protected by a 1-meter (3-feet) cover of fill before heavy equipment is permitted to cross during construction of the roadway.

601.09 IMPERFECT TRENCH

Under this method, which shall be used for rigid conduit only, the embankment shall be completed as described above, to a height above the conduit equal to the vertical outside diameter of the conduit plus 30 centimeters (1 foot). A trench equal in width to the outside horizontal diameter of the conduit shall then be excavated to within 30 centimeters (1 foot) of the top of the conduit, trench walls being as nearly vertical as possible. This trench shall be loosely filled with highly compactible soil. Straw, hay, corn stalks, leaves, brush or sawdust may be used to fill the lower 1/4 to 1/3 of the trench. Construction of embankment above shall then proceed in a normal manner.

601.10 METHOD OF MEASUREMENT

Conduit of the different types and sizes, both new and relaid, will be measured by the linear meter in place. Conduit with sloped or skewed ends will be measured along the invert.

End sections will be measured by the number of units installed.

Branch connections and elbows will be measured by the number of units installed.

Excavation for conduits, including excavation below flow-line grade and for imperfect trench, bedding and backfill, will be measured for payment as provided in Section 205.

601.11 BASIS OF PAYMENT

The accepted quantities of conduit will be paid for at the contract unit price per linear meter for conduit of the types and sizes specified complete in place. End sections, branch connections and elbows will be paid for at the contract unit price per each for the kind and size specified complete in place.

Excavation for conduits, including excavation below flow-line grade and for imperfect trench, bedding and backfill, will be measured and paid for as provided in Section 205.

SECTION 602 MANHOLES, INLETS AND CATCH BASINS

602.01 DESCRIPTION

This work consists of the construction of manholes, inlets and catch basins in conformity with the lines and grades shown on the Plans or established by the Engineer.

602.02 MATERIALS

Concrete for these structures shall meet the requirements of Section 504.

(1) CORRUGATED METAL UNITS

Corrugated metal units shall conform to the Plan dimensions and the metal to AASHO M 36. Bituminous coating, when specified, shall conform to AASHO M 190 Type A.

(2) CLAY OR SHALE BRICK

Clay or shale brick shall conform to the requirements of one of the following Specifications and shall be of the grade specified.

Sewer Brick — AASHO M 91
Building Brick — AASHO M 114

(3) CONCRETE BRICK

Concrete brick shall conform to the requirements of ASTM C 55 grade as specified.

(4) CONCRETE MASONRY BLOCKS

Concrete masonry blocks may be rectangular or segmented and when specified, shall have ends shaped to provide interlock at vertical joints. Solid blocks shall conform with requirements of ASTM C 139 or ASTM C 145 grade as specified. Hollow blocks shall conform to the requirements

of ASTM C 90 grade as specified. Dimensions shall be as specified.

(5) JOINT MORTAR

Joint mortar shall consist of one part Portland cement and two parts approved sand with water as necessary to obtain the required consistency. Mortar shall be used within 30 minutes after preparation.

(6) FRAMES, GRATES AND COVERS, AND LADDER RUNGS

Metal units shall conform to the Plan dimensions and to the following Specification requirements.

Gray iron castings shall conform to the requirements of AASHO M 105. Strength class shall be optional unless otherwise designated.

Carbon-steel castings shall conform to the requirements of AASHO M 103. Grade shall be optional unless otherwise designated.

Structural steel shall conform to the requirements of AASHO M 183.

Galvanizing, where specified for these units, shall conform to the requirements of AASHO M 111.

Malleable iron castings shall conform to the requirements of AASHO M 106. Grade shall be optional unless otherwise designated.

(7) REINFORCING STEEL

Reinforcing steel shall conform to the requirements of Section 505.

(8) PRECAST CONCRETE UNITS

Precast concrete units shall be cast in substantial permanent

steel forms. Structural concrete used shall attain a minimum 28-day compressive strength of 210 Kg/Cm² (3000 p.s.i), as determined in accordance with AASHO T 22. When air-entrained concrete is specified, it shall have an air content of 6 percent plus or minus $1\frac{1}{2}$ percentage points. The precast units shall be cured in accordance with AASHO M 170. Additional reinforcement shall be provided as necessary to provide for handling of the precast units.

The Contractor shall cast a sufficient number of cylinders from the concrete used to permit compression tests at 7, 14 and 28 days, and to allow for at least two cylinders for each test. These tests shall be conducted by the Contractor at the site of manufacture and in the presence of the Engineer. If the strength requirement is met at 7 or 14 days, the units will be certified for use 14 days from date of casting. If the strength requirement is not met at 28 days, all units made from that run of concrete will be rejected.

Cracks in precast units, honeycombed or patched areas in excess of 200 square centimeters (30 square inches), or failure to meet strength requirements will be cause for rejection.

Precast reinforced-concrete manhole-riser sections and appurtenances shall conform to the requirements of AASHO M 199.

Rubber-ring gaskets shall conform to the requirements of AASHO M 198.

Poured filler for joints shall conform to the requirements of AASHO M 173. Other types approved by the Engineer may be used.

Preformed fillers for joints shall conform to the requirements of AASHO M 33, M 153, M 213 or M 220 as specified.

602.03 CONSTRUCTION REQUIREMENTS

Concrete construction shall conform to the requirements for Section 504. Masonry shall conform to the requirements for the respective type. Joints shall be full mortar joints and shall not be more than 1.5cm ($\frac{1}{2}$ inch) wide. When specified, the outside face of structures shall be plastered with a 1.5cm ($\frac{1}{2}$ inch) thick cement-sand mortar coat. Unless otherwise provided, exposed surfaces of concrete and masonry shall be cured wet for a period of not less than 48 hours.

Joints for precast-concrete manhole sections shall be made with Portland cement mortar, rubber gaskets, mastic joint fillers, or by a combination of these types. The completed mortar joint shall be formed with a bead on the outside and finished smooth on the inside of the sections, and suitably cured. The rubber-ring gaskets shall be installed so as to form a flexible watertight seal. The mastic joint filler shall be applied in accordance with the manufacturer's recommendations so as to form a watertight seal.

Metal frames shall be set in a full mortar bed. Pipe sections smaller in diameter than the structure shall be flush on the inside of the structure wall and project outside sufficiently for proper connection with next pipe section. Pipe sections larger in diameter than the structures shall be constructed as monolithic tee sections. Masonry shall fit neatly and tightly around the pipe.

When grade adjustment of existing structures is specified, the frames, covers and gratings shall be removed and the walls reconstructed as required. The cleaned frames shall be reset at the required elevation. Upon completion, each structure shall be cleaned of any accumulations of silt, debris or foreign matter of any kind and shall be kept clear of such accumulation until final acceptance of the work.

Excavation and backfill shall be done in accordance with Section 205.02.

602.04 METHOD OF MEASUREMENT

Manholes, inlets and catch basins, both new and reconstructed, will be measured by the unit. Manholes will be divided into two types.

Type 1 : Structures connected to pipes less than 1 meter (42 inches) or less in diameter, regardless of the pipe skew.

Type 2 : Structures connected to at least one pipe larger than 1 meter (42 inches) in diameter, regardless of the pipe skew.

In addition, each 30cm (1 ft) of manhole depth that exceeds 2 meters (6 feet) will be measured for additional payment known as Manhole Additional Depth. This additional depth shall be measured in linear meters from a point 2 meters (6 feet) above the invert of the deepest pipe to the top of the cover or grating.

602.05 BASIS OF PAYMENT

The accepted quantities of manholes, inlets and catch basins will be paid for at the contract unit price per each, complete in place. Manhole Additional Depth, measured as indicated above, will be paid for at the contract unit price per linear meter. Such payments shall be full compensation for excavation, backfill and construction of the manhole, for furnishing all castings, fittings and other appurtenances called for on the Plans to complete the item for making necessary pipe connections, regardless of skew for all other materials needed and for the disposal of surplus material.

Excavation, bedding, backfill, replacing pavement where required, reinforcing steel and disposal of surplus material will not be measured and paid for separately, but shall be included in the contract price for each structure unless otherwise specified.

SECTION 603 UNDERDRAINS

603.01 DESCRIPTION

This work consists of constructing underdrains in conformance with the lines and grades shown on the Plans or established by the Engineer.

603.02 MATERIALS

Perforated Plastic Pipe for Underdrain shall conform to the requirements of ASTM 2729; wall thickness shall conform to ASTM D 2836, Table 4. Size and spacing of perforations shall conform to AASHO M 189.

Corrugated Iron or Steel Pipe for Underdrains shall conform to the requirements of AASHO M 36.

Perforated Concrete Pipe shall conform to the requirements of AASHO M 175 or to ASTM M 175 or to ASTM C 44 for the specified diameters and strength classes.

Drain Tile shall conform to the requirements of AASHO M 178 or M 179 for the specified material, diameters and quality classes. When specified, the pipe spacer shall have integral spacer lugs to provide for an annular opening and self-centering feature.

Porous Concrete Pipe shall conform to the requirements of AASHO M 176 for the specified diameters.

Perforated Asbestos Cement Pipe shall conform to the requirements of AASHO M 189 for the specified diameters.

Asbestos Cement Pipe shall conform to the requirements of AASHO M 217 or ASTM C 428 for the specified diameters and strength classes.

Perforated Vitrified Clay Pipe shall conform to the

requirements of AASHO M 65 for pipe with full circular cross-section, for the specified diameter and strength class. When specified, the bell shall have integral spacer lugs to provide for an annular opening.

Cradle Invert Clay Pipe shall conform to the applicable requirements of AASHO M 65.

Perforated Bituminized-Fiber Pipe shall conform to the requirements of AASHO M 177 for the specified diameters. Unless otherwise specified, either Type I or Type II couplings may be furnished.

Bituminized-Fiber Pipe shall conform to the requirements of AASHO M 177.

Corrugated Aluminum-Alloy Pipe for Underdrains shall conform to the requirements of AASHO M 197.

Aggregate for drainage shall conform to the following:

Permeable Material for use in backfilling trenches under, around and over underdrains and permeable material for blankets or other subdrainage purposes shall consist of hard, durable, clean sand, gravel, crushed stone or crushed slag, and shall be free from organic material, clay balls or other deleterious substances.

Coarse Aggregate for Underdrain and Drainage Course shall meet the quality requirements of AASHO M 80, with gradation meeting requirements of AASHO M 43 for size No. 89.

Fine Aggregate for Underdrain shall meet the requirements of AASHO M 6.

Aggregate requirements will be shown on the Plans or in the Special Provisions.

603.03 PIPE INSTALLATION

Trenches shall be excavated to the dimensions and grade required by the Plans or as directed. A minimum 7.5 centimeters (3-inch) bedding layer of granular backfill material of the type noted on the Plans shall be placed and compacted in the bottom of the trench for its full width and length.

Subdrainage pipe of the type and size specified shall be embedded firmly in the bedding material.

Perforated pipe shall normally be placed with the perforations down, except that the last 3 meters (10 feet) at the outlet end, which may be non-perforated pipe, and the pipe sections shall be joined securely with the appropriate coupling fittings or hands.

Non-perforated pipe shall be laid with the bell end upgrade and with open joints, wrapped with suitable material to permit entry of water or unwrapped, as may be specified. Upgrade ends of all subdrainage pipe installations shall be closed with suitable plugs to prevent entry of soil materials.

After the pipe installation has been inspected and approved, granular backfill material shall be placed to a height of 30 centimeters (12 inches) above the top of pipe. Care shall be taken not to displace the pipe or the covering at open joints. The remainder of the granular backfill material shall then be placed and compacted to the required height. Any remaining portion of trench above the granular backfill shall be filled with granular or impervious material, as may be specified, and thoroughly compacted.

603.04 UNDERDRAIN OUTLETS

Trenches for underdrain outlets shall be excavated to the

width and depth shown on the Plans. Pipe shall be laid in the trench with all ends firmly joined by the applicable methods and means. After inspection and approval of the pipe installation, the trench shall be backfilled with suitable material in layers and compacted as provided for drainage pipe. Each outlet end of the subdrainage system shall be marked in accordance with Plan details.

603.05 METHOD OF MEASUREMENT

Underdrains and outlets will be measured by the linear meter for pipe of the type and size specified.

Excavation will be measured for payment as provided in Section 205.

Aggregate for drainage, of the type specified, will be measured by the cubic meter or by the metric ton.

603.06 BASIS OF PAYMENT

The accepted quantities of underdrains will be paid for at the contract unit price per linear meter of each kind, and of the types and sizes specified, complete in place.

Excavation will be paid for as provided in Section 205. Aggregate for drainage of the type specified will be paid for by the cubic meter or metric ton.

SECTION 604 GUARD RAIL

604.01 DESCRIPTION

This work consists of the construction of guard rail in conformity with the lines and grades shown on the Plans or established by the Engineer, and shall include the assembly and erection of all component parts and materials complete at the locations shown on the Plans or as directed.

The types of guard rail are designated as follows:

Type G1 Wood Beam Guard Rail
Type G2 Cable Guard Rail
Type G3 "W" Beam Guard Rail
Type MB1 "W" Beam Median Barrier
Type MB2 Concrete Barrier (New Jersey)

604.02 MATERIALS

Concrete for guard rail posts and for center median barriers shall meet the requirements of Section 504. Reinforcing-steel for concrete shall meet the requirements of Section 505.

Wire Rope or Wire Cable shall conform to the requirements of AASHO M 30 for the specified type.

Metal Beam Rail elements shall be corrugated sheet-steel beams conforming to the requirements of AASHO M 180 of the designated class and type. Rub rails shall conform to AASHO M 183 for galvanized or painted rails or to AASHO M 22 for corrosion-resistant rails. Galvanizing shall be in accordance with AASHO M 111.

Timber for rails and posts shall be cut from the specified grade of dry, well seasoned and dressed timber stock of the species specified, which shall meet the applicable requirements of AASHO M 168.

Surfaces which will be in contact with earth materials shall be thoroughly coated with two applications of hot creosote oil to a height of 15 centimeters (6 inches) above ground line.

Guard Rail Hardware shall conform to the applicable standards contained in the ARBA Bulletin No. 268 "A Guide to Standardized Highway Barrier Rail Hardware," approved by the AASHO-ARBA Joint Committee.

Guard Rail Posts shall conform to the applicable standards contained in ARBA Bulletin No. 268 "A Guide to Standardized Highway Barrier Rail Hardware," approved by the AASHO-ARBA Joint Committee.

Paint for field painting of guard rail shall conform to the AASHO Specifications for the type and color specified in the contract. If not otherwise specified, the requirements for Section 514 shall apply.

604.03 POSTS

Posts shall be set plumb, in hand-dug or mechanically-dug holes, unless driving is permitted. In the latter case, the manner of driving shall be such as to avoid battering or distorting of posts. Post holes shall be backfilled with acceptable material placed in layers and thoroughly compacted. When it is necessary to cut post holes in existing paving, all loose material shall be removed and the paving replaced in kind.

604.04 RAIL ELEMENTS

Rail elements shall be erected according to Plan details and in a manner resulting in a smooth, continuous installation with laps in the direction of traffic flow. All bolts, except adjustment bolts, shall be drawn tight. Bolts shall be of

sufficient length to extend beyond the nuts by not more than 1.5cm ($\frac{1}{2}$ inch).

Where painting of railing components is specified, any damage to the shop coat of paint shall be corrected by an application of an approved rust-inhibitive primer prior to other painting. Any surfaces inaccessible to painting after erection shall be field-painted before erection. The railing components shall be given the specified number of coats of paint uniformly applied by thorough brushing or by approved pressure spray, as specified.

Galvanized surfaces which have been abraded so that the base metal is exposed, threaded portions of all fittings and fasteners, and cut ends of bolts shall be protected with a zinc-rich paint.

604.05 METHOD OF MEASUREMENT

Guard rail will be measured by the linear meter from the center of end posts. Double-faced rail will be measured separately from single-faced rail.

End anchorages and terminal sections will be measured as units of each kind specified and installed.

604.06 BASIS OF PAYMENT

The accepted quantities of guard rail will be paid for at the contract unit price per linear meter for the type specified, complete in place. End anchorages and terminal sections will be paid for at the contract unit price per each of the kind specified, complete in place.

SECTION 605 FENCES

605.01 DESCRIPTION

This work consists of the construction of fence and gates in conformity with the lines and grades shown on the Plans or established by the Engineer.

605.02 MATERIALS

Woven Wire shall conform to the requirements of ASTM A 116 for the coating class specified.

Barbed Wire shall conform to the requirements of ASTM A 121 for the coating class specified.

Chain Link Fabric and required fittings and hardware shall conform to the requirements of AASHO M 181 for the kind of metal, coating, sizes of wire and mesh specified.

Wood fence posts shall conform to the details and dimensions indicated on the Plans. All wood posts shall be of sound, seasoned wood, peeled and with ends cut square or as indicated. The posts shall be straight and all knots trimmed flush with the surface. Where treated posts are called for, the kind and type of treatment shall conform to that indicated on the Plans.

All dimension timber and lumber required for fences or gates shall be sound, straight and free from knots, splits and shakes. It shall be of the species and grades indicated on the Plans, and shall be dressed and finished on four sides.

Concrete fence posts shall be made of concrete of the class specified, and contain steel reinforcement, as shown on the Plans.

Steel fence posts shall be galvanized in accordance with AASHO M 111, except that tubular steel posts shall be galvanized in accordance with ASTM A 120. Fittings, hardware and other appurtenances not specifically covered by the Plans and Specifications shall be standard commercial grade and in accord with current standard practice.

605.03 GENERAL CONSTRUCTION REQUIREMENTS

The Contractor shall perform such clearing and grubbing as may be necessary to construct the fence to the required grade and alignment.

Post spacing shall be equal throughout the length of fence except where a bend, break, gate, intersection or other change requires a post at less than panel length. In such a case, the reduction in panel length will be distributed over five panels approaching the change.

When the Plans require that posts or anchors be embedded in concrete, the Contractor shall install temporary guys or braces as may be required to hold the posts in proper position until such time as the concrete has set sufficiently to hold the posts. Unless otherwise permitted, no materials shall be installed on such posts nor shall the strain on temporary guys and bracing be relieved until seven days have elapsed from the time of placing of the concrete.

The tops of all posts shall be set to the required grade and alignment. Cutting of the tops of the post will be allowed only with the approval of the Engineer and under the conditions specified by him.

Wire or fencing of the size and type required shall be firmly attached to the posts and braces in the manner indicated. All

wire shall be stretched taut and be installed to the required elevations.

Fence shall generally follow the contour of the ground, with the bottom of fence fabric no less than 3 centimeters (1 inch) nor more than 15 centimeters (6 inches) from the ground surface. Grading shall be performed where necessary to provide a neat appearance. Where abrupt changes in the ground profile in low areas make it impractical to maintain the specified ground clearance, longer posts shall be used and multiple strands of barbed wire stretched under the fence in the low areas.

605.04 METHOD OF MEASUREMENT

Fence will be measured by the linear meter. Measurement will be along the top of the fence from outside-to-outside of end posts of each continuous run of fence.

Gates will be measured as complete units of the size and type specified.

605.05 BASIS OF PAYMENT

The accepted quantities of fence will be paid for at the contract unit price per linear meter for fence of the size and type specified, complete in place. Gates of the types and sizes specified, complete in place, will be paid for each unit.

SECTION 606 SIDEWALKS

606.01 DESCRIPTION

This work consists of the construction of bituminous or concrete sidewalks, in conformity with the lines and grades shown on the Plans or established by the Engineer.

606.02 MATERIALS

Bedding material for sidewalks shall consist of sand, gravel, crushed stone or other approved material of such gradation that all particles will pass through a standard 25mm- (1-inch) sieve.

Concrete for sidewalks shall meet the requirements of Section 504. Reinforcing-steel shall meet the requirements of Section 505.

Joint Fillers. Poured filler for joints shall conform to the requirements of AASHO M 173. Other types approved by the Engineer may be used.

Preformed fillers for joints shall conform to the requirements of AASHO M 33, M 153, M 213 or M 220 as specified.

Bituminous material for sidewalks shall meet the requirements of Section 401.

Concrete and bituminous mixes will be subject to inspection and tests at the mixing plants, for compliance with quality requirements.

606.03 CONSTRUCTION-CONCRETE SIDEWALKS

(1) EXCAVATION

Excavation shall be made to the required depth and to a width that will permit the installation and bracing of the

forms. The foundation shall be shaped and compacted to a firm, even surface conforming to the section shown on the Plan. All soft and yielding material shall be removed and replaced with acceptable material.

(2) FORMS

Forms shall be of wood, metal or other suitable material, and shall extend for the full depth of the concrete. All forms shall be straight, free from warp and of sufficient strength to resist the pressure of the concrete without displacement. Bracing and staking of forms shall be such that the forms remain in both horizontal and vertical alignment until their removal. All forms shall be cleaned and coated with an approved form-release agent before concrete is placed.

(3) PLACING CONCRETE

The foundation shall be thoroughly moistened immediately prior to the placing of the concrete. The proportioning, mixing and placing of the concrete shall be in accordance with the requirements for the class of concrete specified. The concrete shall be deposited in such a manner as to prevent segregation.

(4) FINISHING

The surface shall be finished with a wooden float. No plastering of the surface will be permitted.

All outside edges of the slab and all joints shall be edged with a 6mm-($\frac{1}{4}$-inch) radius edging tool.

(5) JOINTS

Expansion joints shall be of the dimensions specified, and

shall be filled with the type of premoulded expansion-joint filler noted. The sidewalk shall be divided into sections by dummy joints formed by a jointing tool or other acceptable means, as directed. These dummy joints shall extend into concrete for at least 1/5 of the depth and shall be approximately 3mm. (1/8 inch) wide. Joints shall match as nearly as possible adjacent joints in curb or pavements. Dummy joints may be sawed in lieu of forming with a jointing tool.

Construction joints shall be formed around all appurtenances, such as manholes, utility poles, etc., extending into and through the sidewalk. Premoulded expansion-joint filler 1.5cm ($\frac{1}{2}$ inch), thick shall be installed in these joints. Expansion joint filler of the thickness indicated shall be installed between concrete sidewalks and any fixed structure such as a building or bridge. This expansion-joint material shall extend for the full depth of the walk.

(6) CURING

Concrete shall be cured for at least 72 hours. Curing shall be by means of moist burlap or mats or by other approved methods. During the curing period all traffic, both pedestrian and vehicular, shall be excluded. Vehicular traffic shall be excluded for such additional time as the Engineer may direct.

606.04 CONSTRUCTION BITUMINOUS SIDEWALK

(1) EXCAVATION AND FORMS

Excavation and forms, when required, shall meet the requirements of Section 606.03, (1) and (2).

(2) BED COURSE

Bed course material shall be placed in layers not exceeding 10 centimeters (4 inches) in depth, and each layer shall be thoroughly compacted.

(3) PLACING BITUMINOUS SIDEWALK MATERIAL

Bituminous sidewalk material shall be placed on the compacted bed course in one or more courses as indicated so as to give the required depth when rolled. Compaction shall be accomplished by means of a roller of a type and weight acceptable to the Engineer. In areas inaccessible to the roller, hand tamping will be permitted. In any case, the bituminous sidewalk material shall be uniformly compacted.

606.05 METHOD OF MEASUREMENT

Concrete or bituminous sidewalks will be measured by the square meter of finished surface. Bed course material will be measured by the metric ton or cubic meter.

606.06 BASIS OF PAYMENT

The accepted quantities of sidewalk will be paid for at the contract unit price per square meter for concrete sidewalk or for bituminous sidewalk, and per metric ton or cubic meter for bed course material complete in place.

Reinforcement, if used, will be measured and paid for as provided in Section 505.

Excavation, backfill, disposal of surplus materials, expansion-joint material and other related miscellaneous items will not be paid for separately, but the cost thereof shall be included in the cost of the sidewalk.

SECTION 607 CURB-CURB AND GUTTER

607.01 DESCRIPTION

This work consists of construction or resetting of curb, gutter or combination curb and gutter in conformity with the lines and grades shown on the Plans or established by the Engineer.

The types of curbing are designated as follows:

Type 1 Stone Curbing of Quarried Natural Stone
Type 2 Cast-in-Place Concrete Curbing
Type 3 Precast-Concrete Curbing
Type 4 Reflecting Concrete Curbing
Type 5 Bituminous Curbing

607.02 STONE CURBING

(1) STONE CURB

Stone curb shall be approved limestone, sandstone, granite on other acceptable stone. Stone shall be of the material indicated in the contract, or, if none is indicated, it may be any one of the three at the Contractor's opinion, provided that only one of the varieties of stone shall be supplied for the Project.

The exposed faces of stone curb shall be free from drill holes.

All vertical stone curb shall have a top surface sawed or pointed to an approximate true plane, with no depression or projection on that surface of over 6 millimeters ($\frac{1}{4}$ inch). There shall be no projection or depression on the exposed back surface which would exceed a batter of $2\frac{1}{2}$ cm (1 inch) horizontal on 7.5 cm (3 in) vertical.

The front-exposed face of vertical stone curb shall be sawed, pointed or smooth-quarry split, as specified on the

Plans for the type specified, and shall be formed to an approximately true plane. The remaining face distance shall have no projections or depressions greater than 2.5cm (1 in) from the plane of the exposed face noted above.

The ends of vertical stone curb shall be square with the planes of the top, back and face, and so finished that when the sections are placed end-to-end as closely as possible, no space more than 1.5cm ($\frac{1}{2}$ inch) shall show in the joint for the full width of the top surface and for the entire exposed-front face. The remainder of the end may break back no more than 10 cm (4 in) from the plane of the joint. The joints of circular or curved stone curb shall be cut on radial lines.

The minimum length of any segment of vertical stone curb shall be 1.2 meter (4 feet) unless otherwise noted on the Plans.

When, required for driveways, crossings, closures or for other reasons a depressed or modified section of curb is indicated on the Plans or ordered by the Engineer, the Contractor shall furnish curbing with the required modification.

(2) SLOPE-STONE CURB

Unless otherwise indicated on the Plans, slope-stone curb shall conform to the requirements for stone curb except as follows :

The maximum allowable projection or depression on a horizontal top surface shall be 12 millimeters ($\frac{1}{2}$ inch); on other exposed faces the maximum allowable projection or depression shall be 2.5cm (one inch).

For unexposed surfaces the maximum allowable projection

of depression from a true plane on a 0.6 meter-length shall be 7.5cm (3 in).

The maximum allowable space showing on exposed faces between adjacent segments of slope-stone curb shall be 20 millimeters (3/4 inch). The minimum length of any segment of slope-stone curb shall be 0.6 meter (2 feet).

(3) CONSTRUCTION-STONE CURB OR SLOPE-STONE CURB

(a) EXCAVATION

Excavation shall be made to the required depth, and the base upon which the curb is to be set shall be compacted to a firm, even surface. All soft and unsuitable material shall be removed and replaced with suitable material which shall be thoroughly compacted.

(b) INSTALLATION

The curb shall be set so that the front top arris line conforms to the line and grade required. All spaces under the curbing shall be filled with material conforming to the requirements of the material for bed course. This material shall be thoroughly tamped.

(c) JOINTS

Curbing shall be laid with joints as close as possible for stone curb. These joints shall be filled with mortar consisting of one part Portland cement and two parts approved sand with water as necessary to obtain the required consistency. Mortar shall be used within 30 minutes after preparation.

In those cases where a Portland cement concrete pavement is to be constructed contiguous to a curbing, joints shall be constructed in the curbing directly in line

with pavement expansion joints. The joint in the curb shall be 20 millimeters (3/4 inch) in width and shall be filled with an expansion-joint filler of the same nominal thickness as the pavement joint. Any voids between the joint filler and the stone curb shall be filled with mortar.

(b) BACKFILLING

After the curb has been set, any remaining excavated areas shall be filled with approved material. This material shall be placed and thoroughly tamped in layers not exceeding 15 centimeters (6 inches) in depth.

607.03 CAST-IN-PLACE CONCRETE CURB

(1) MATERIALS

Concrete for curbing shall meet the requirements of Section 504. Reinforcement shall meet the requirements of Section 505. Poured filler or preformed filler for joints shall meet the requirements of Section 606.02.

(2) FORMS

Forms shall be of wood, metal or other suitable material, and shall extend for the full depth of the concrete. All forms shall be straight, free from warp and of sufficient strength to resist the pressure of the concrete without displacement. Bracing and staking of forms shall be such that the forms remain in both horizontal and vertical alignment until their removal. All forms shall be cleaned and coated with an approved form-release agent before concrete is placed.

(3) MIXING AND PLACING

Concrete shall be proportioned, mixed and placed in

accordance with the requirements for the class of concrete specified. Consolidation of concrete placed in the forms shall be by vibration or other acceptable methods. Forms shall be left in place for 24 hours or until the concrete has set sufficiently so that they can be removed without injury to the curbing. The concrete shall be struck off to the cross-section specified, after which it shall be finished smooth and even by means of a wood float. For the purpose of matching adjacent concrete finishes or for other reasons, the Engineer may permit other methods of finishing. No plastering will be permitted.

(4) SECTIONS

Curbing shall be constructed in sections having a uniform length of 3 meters (10 feet), unless otherwise ordered. Sections shall be separated by open joints 3 millimeters (1/8 inch) wide except at expansion joints. Where the curb is constructed adjacent to concrete pavement, the contraction or open joints in the curb shall match the contraction joints in the pavement.

(5) EXCAVATION

Excavation and bedding shall conform to the requirements of Subsection 607.02(3)(a).

Bed course material for curbing shall consist of cinders, sand, slag, gravel, crushed stone or other approved material of such gradation that all particles will pass through a standard 1.5cm-($\frac{1}{2}$-inch) sieve.

(6) EXPANSION JOINTS

Expansion joints shall be formed at the intervals shown on the Plans using a preformed expansion-joint filler having a thickness of 20 millimeters (3/4 inch). When the curb is

constructed adjacent to or on concrete pavement, expansion joints shall be located opposite or at expansion joints in the pavement.

(7) CURING

Immediately upon completion of the finishing, the curbing shall be moistened and kept moist for three days, or the curbing shall be cured by the use of membrane-forming material. The method and details of curing shall be subject to the approval of the Engineer.

(8) BACKFILLING

After the concrete has set sufficiently, the spaces in front and back of the curb shall be refilled to the required elevations with suitable material, which shall be thoroughly tamped in layers of not more than 15 centimeters (6 inches).

(9) CURB MACHINE

The curb or curb and gutter may be constructed by the use of a curb-forming machine meeting the requirements of Section 607.06(4). When the curb machine is used, contraction joints may be created in a manner approved by the Engineer.

607.04 PRECAST CONCRETE CURB

Precast concrete curb shall consist of precast Portland cement concrete curb units constructed to the length, shapes and other details shown on the Plans. These units shall be reinforced with steel reinforcement when shown on the Plans. When required for driveways, crossings, closures or for other reasons, a depressed or modified section of curb is indicated on the Plans or ordered by the Engineer,

the Contractor shall furnish curbing with the required modification.

Manufacture of precast concrete curb shall meet the applicable requirements of Section 607.03.

Placing of precast concrete curb shall meet the requirements of Section 607.02(3).

607.05 REFLECTING CONCRETE CURB

Materials and construction methods for this item shall conform to the requirements of Section 607.03, with the following supplements:

The reflecting surface of the curbing shall be a mortar mix consisting of 1 part white Portland cement to 1 3/4 parts of light-colored, washed mortar sand. This mortar mix shall have a thickness of approximately 25 millimeters (1 inch). Alternately, the entire curbing may be constructed of concrete with white Portland cement.

Washed mortar sand shall meet all the requirements for mortar sand and be of a light color or satisfactory to the Engineer. The reflecting surface mortar shall be placed immediately after placing of the base concrete. In no case shall more than twenty minutes elapse between placing of the base concrete and the placing of the reflecting surface.

Scoring or surface deformation and finish of the reflecting surface shall conform to the details shown on the Plans.

607.06 BITUMINOUS CURB

Bituminous material for curbing shall meet the requirements of Section 401,

Excavation shall conform to the requirements of Subsection 607.02(3)(a).

When curbing is to be constructed on a fresh-laid bituminous surface, the curb may be laid only after the surface has been cleaned.

When curbing is to be constructed on a cured or aged Portland cement concrete base, bituminous pavement or bituminous-treated base, the bed shall be thoroughly swept and cleaned by compressed air. The surface shall be thoroughly dried and, immediately prior to placing of the bituminous mixture, shall receive a tack coat of bituminous material of the type and grade approved by the Engineer. The rate of application of the tack coat material shall be between 0.20 to 0.60 liters per square meter of surface. The Contractor shall prevent the spread of tack coat to areas outside of the area to be occupied by the curb.

Bituminous curbing shall be constructed by use of a self-propelled automatic curber or curb machine, or a paver with curbing attachments or other methods acceptable to the Engineer. The automatic curber or machine shall meet the following requirements and shall be approved prior to its use.

a. The weight of the machine shall be such that required compaction is obtained without the machine riding above the bed on which curbing is constructed.

b. The machine shall form curbing that is uniform in texture, shape and density.

c. The Engineer may permit the construction of curbing by means other than the automatic curber or machine when short sections or sections with short radii are required, or

for such other reasons as may seem to him to be warranted. The resulting curbing shall conform in all respects to the curbing produced by the use of the machine.

When sealing or painting is required, it shall be performed only on a curbing which is clean and dry.

607.07 RESETTING CURB

(1) SALVAGE OF CURBING

The Contractor shall carefully remove, store and clean any curbing specified for resetting. The Contractor shall replace any existing curbing that is to be reset, which is lost, damaged or destroyed as a result of his operations, or because of his failure to store and protect it in a manner that would eliminate its loss or damage.

(2) EXCAVATION

Excavation and bedding shall conform to the requirements of Subsection 607.03A.

(3) RESETTING CURB

The curb shall be set on a firm bed with the front top arris line conforming to the required line and grade. All sections of curbing shall be set so that the maximum opening between adjacent sections is not more than 20 millimeters 3/4 inch) wide for the entire exposed top and face. Any dressing of the ends of the curbing necessary to meet this requirement shall be done by the Contractor.

After the curb has been set, the joints shall be completely filled with mortar, as specified.

(4) BACKFILLING

The spaces in front and back of the curb shall be refilled to

the required elevation with suitable material. This material shall be thoroughly tamped in layers of not over 15 centimeters (6 inches) in depth.

(5) CUTTING AND FITTING

Cutting and fitting may be necessary in order to install the curbing at the locations directed.

607.08 METHOD OF MEASUREMENT

Curbing, both new and reset, will be measured by the linear meter along the front face of the section at the finished grade elevation. Combination curb and gutter will be measured along the face of the curb. No deduction in length will be made for drainage structures installed in the curbing section or for driveway openings where the gutter is carried across the drive.

Bed course material will be measured by the metric ton or by the cubic meter.

607.09 BASIS OF PAYMENT

The accepted quantities of curbing will be paid for at the contract unit price per linear meter for each kind and type of curbing specified, and per metric ton or cubic meter for bed course material complete in place. Such payment shall include all subgrade preparation and the disposal of surplus materials.

SPECIFICATIONS

for

HIGHWAY MATERIALS

TABLE OF CONTENTS

NUMBER	SUBJECT	PAGE
M-6	Fine Aggregate for Portland Cement	1
M-17	Mineral Filler for Bituminous Paving Mixtures	3
M-20	Penetration-Graded Asphalt Cement	4
M-29	Fine Aggregate for Bituminous Paving Mixtures	5
M-31	Deformed Billet Steel Bars for Concrete Reinforcement	6
M-32	Cold-Drawn Steel Wire for Concrete Reinforcement	11
M-33	Preformed Expansion Joint Filler for Concrete (Bituminous Type)	13
M-36	Zinc-Coated (Galvanized) Corrugated Iron or Steel Culverts and Underdrains	14
M-42	Rail-Steel Deformed Bars for Concrete Reinforcement	22
M-43	Standard Sizes of Coarse Aggregate for Highway Construction	26
M-45	Aggregate for Masonry Mortar	28
M-46	Asphalt Plank	29
M-53	Axle-Steel Deformed Bars for Concrete Reinforcement	32
M-54	Fabricated Steel Bar or Rod Mats for Concrete Reinforcement	36
M-55	Welded Steel Wire Fabric for Concrete Reinforcement	39
M-62	Crushed Stone, Crushed Slag and Crushed Gravel for Dense-Graded Bituminous Road and Plant-Mix Surface Course.	44
M-63	Crushed Stone, Crushed Slag and Crushed Gravel for Open-Graded Bituminous Road-Mix Surface Course	45

NUMBER	SUBJECT	PAGE
M-65	Clay Pipe	46
M-67	Foliage-Green Bridge Paint	55
M-68	Black Paint for Bridges or Timber Structures	56
M-69	Aluminum Paint	58
M-70	White and Tinted Ready-Mixed Paint	61
M-72	Red Lead Ready-Mixed Paint	63
M-75	Crushed Stone and Crushed Slag for Base Course	66
M-76	Crushed Stone and Crushed Slag for Bituminous Concrete Base Course	68
M-79	Crushed Stone and Crushed Slag for Bituminous Concrete Surface Course	69
M-80	Coarse Aggregate for Portland Cement Concrete	70
M-81	Cut-Back Asphalt (Rapid Curing Type)	72
M-82	Cut-Back Asphalt (Medium Curing Type)	74
M-85	Portland Cement	75
M-86	Concrete Sewer, Storm Drain and Culvert Pipe	78
M-91	Sewer and Manhole Brick (Made from Clay or Shale)	85
M-92	Wire Cloth Sieves for Testing Purposes	87
M-134	Air-Entraining Portland Cement	91
M-135	Natural Cement	95
M-138	Copper Sheet, Strip, Plate and Rolled Bar	97
M 140	Emulsified Asphalt	101
M-141	Slow-Curing Liquid Asphaltic Road Material	103
M-145	Classification of Soils and Soil-Aggregate Mixtures for Highway Construction Purposes	104
M-147	Materials for Aggregate and Soil-Aggregate Subbase, Base and Surface Courses	111
M-148	Liquid Membrane-Forming Compounds for Curing Concrete	113
M-150	Masonry Cement	115

NUMBER	SUBJECT	PAGE
M-153	Preformed Expansion Joint Fillers for Concrete Paving and Structural Construction (non-extruding and Resilient Non-bituminous type)	121
M-154	Air Entraining Admixtures for Concrete	123
M-164	High-Strength Bolts for Structural Steel Joints, Including Suitable Nuts and Plain Hardened Washers	125
M-167	Structural Plate for Pipe, Pipe-Arches, and Arches	130
M-168	Structural Timber, Lumber, and Piling	136
M-169	Cold-Finished Carbon Steel Bars and Shafting	139
M-170	Reinforced Concrete Culvert, Storm Drain and Sewer Pipe	143
M-175	Perforated Concrete Pipe	156
M-178	Concrete Drain Pile	159
M-179	Clay Drain Tile	165
M-180	Corrugated Sheet-Steel Beams for Highway Guardrail	169
M-199	Precast Reinforced-Concrete Manhole Sections	173
M-202	Steel Sheet Piling	179
M-203	Uncoated Seven Wire Stress-Relieved Strand for Prestressed Concrete	181
M-204	Uncoated Stress-Relieved Wire for Prestressed Concrete	184
M-208	Cationic Emulsion Asphalt	188
M-216	Lime for Soil Stabilization	190
M-219	Aluminum Alloy Structural Plate for Pipe, Pipe-Arches and Arches	191
M-221	Welded Deformed Steel Wire Fabric for Concrete Reinforcement	194
M-223	High-Strength, Low-Alloy Columbium Vanadium Steels of Structural Quality	199
M-228	Steel Structural Rivets	203

Standard Specification for

Fine Aggregate for Portland Cement Concrete

AASHO DESIGNATION: M 6–65

SCOPE

1.1 This specification covers the quality and size of fine aggregate for portland cement concrete pavements or bases, highway bridges and incidental structures.

GENERAL REQUIREMENTS

2.1 Fine aggregate shall consist of natural sand or, subject to approval, other inert materials with similar characteristics, or combinations thereof, having hard, strong, durable particles, and shall conform to the requirements of these specifications.

2.2 Fine aggregate from different sources of supply shall not be mixed or stored in the same pile nor used alternately in the same class of construction or mix, without permission from the Engineer.

DELETERIOUS SUBSTANCES

3.1 The amount of deleterious substances shall not exceed the following limits:

	Recommended permissible limits, per cent by wt.	Maximum permissible limits, per cent by wt.
	(Note)	
Friable particle, not more than	0.5	1.0
Coal and lignite	0.25	1
Material passing the No. 200 sieve:		
(a) In concrete subject to surface abrasion, not more than	2	4
(b) All other classes of concrete, not more than	3	5
Other deleterious substances (such as shale, alkali, mica, coated grains, soft and flaky particles)	...	As specified

NOTE. The recommended limits should be specified on all work where it is economically practicable to obtain materials conforming thereto. Only one set of figures for per cent by weight should be included in purchase specifications

SOUNDNESS

4.1 When the fine aggregate is subjected to five alternations of the sodium sulfate soundness test, the weighted loss shall not exceed 10 per cent by weight.

NOTE: In case it is desired to use magnesium sulfate, a weighted loss should be specified which experience has shown will give results corresponding to a loss of 10 per cent using sodium sulfate.

4.2 Fine aggregate failing to meet the requirement given in 4.1 may, at the option of the Engineer, be subjected to an alternate freezing and thawing test and may be accepted provided the weighted percentage of loss at the end of —— alternations does not exceed —— per cent by weight.

NOTE: The Engineer should insert appropriate requirements based on his experience with the test.

4.3 The requirements for soundness given in 4.1 and 4.2 may be waived in the case of aggregate for use in structures or portions of structures not exposed to weathering.

ORGANIC IMPURITIES

5.1 All fine aggregate shall be free from injurious amounts of organic impurities. Aggregates subjected to the colorimetric test for organic impurities and producing a color darker than the standard shall be rejected unless they pass the mortar strength test as

specified in 5.2. Should the aggregate show a darker color than that of samples originally approved for the work, its use shall be withheld until tests satisfactory to the Engineer have been made to determine whether the increased color is indicative of an injurious amount of deleterious substances.

5.2 A fine aggregate failing in the test may be used provided that, when tested for the effect of organic impurities on strength of mortar, the relative strength at 7 and 28 days, calculated in accordance with Section 10 of AASHO T 71 is not less than 95 per cent.

GRADING

6.1 Fine aggregate shall be well-graded from coarse to fine and when tested by means of laboratory sieves shall conform to the following requirements:

	Per cent
Passing a ⅜-inch sieve	100
Passing a No. 4 sieve	95–100
Passing a No. 16 sieve	45–80
Passing a No. 50 sieve	10–30
Passing a No. 100 sieve	2–10

NOTE: The No. 8 and No. 30 sieves may be used in addition to those specified, if the Engineer desires to further control the grading of the material.

6.2 Fine aggregate failing to pass the minimum requirement for material passing the No. 50 and/or No. 100 sieves may be used provided a satisfactory inorganic fine material is added to correct for the deficiency in grading.

6.3 At the option of the Engineer, when the fine aggregate is to be used in the construction of concrete pavements or bases, the specified minimum amount passing the No. 50 sieve may be reduced to 5 per cent and the specified minimum amount passing the No. 100 sieve may be reduced to 0 per cent.

UNIFORMITY OF GRADING

7.1 The gradation requirements given in 6.1 represent the extreme limits which shall determine suitability for use from all sources of supply. The gradation from any one source shall be reasonably uniform and not subject to the extreme percentages of gradation specified above. For the purpose of determining the degree of uniformity, a fineness modulus (Note) determination shall be made upon representative samples, submitted by the Contractor, from such sources as he proposes to use. Fine aggregate from any one source having a variation in fineness modulus greater than 0.20 either way from the fineness modulus of the representative sample submitted by the Contractor may be rejected.

NOTE: The fineness modulus of an aggregate is determined by adding the percentages by weight retained on the following sieves having square openings, and dividing by 100:
3-in., 1½-in., ¾-in., ⅜-in., No. 4, No. 8, No. 16, No. 30, No. 50, No. 100.

METHODS OF SAMPLING AND TESTING

8.1 Sampling and testing of fine aggregate shall be in accordance with the following methods of the American Association of State Highway Officials:

Sampling	T 2
Friable particles	T 112
Coal and lignite	T 113
Amount of material passing a No. 200 sieve	T 11
Organic impurities	T 24
Mortar-making properties	T 71
Sieve analysis	T 23
Soundness (sodium sulfate or magnesium sulfate)	T 107
Soundness (freezing and thawing)	T 101

———— o ————

Standard Specification for

Mineral Filler for Bituminous Paving Mixtures

AASHO DESIGNATION: M 17–70

SCOPE

1.1 This specification covers mineral filler added as a separate ingredient for use in bituminous paving mixtures.

GENERAL DESCRIPTION

2.1 Mineral filler shall consist of finely divided mineral matter such as rock dust including limestone dust, slag dust, hydrated lime, hydraulic cement, or other suitable mineral matter. At the time of use it shall be sufficiently dry to flow freely and essentially free from agglomerations.

PHYSICAL REQUIREMENTS

3.1 Mineral filler shall be graded within the following limits:

Sieve	Per cent passing (by weight)
No 30 (0.600-mm)	100
No [illegible] (0.300-mm)	95–100
No [illegible] (0.075-mm)	70–100

3.2 The mineral filler shall be free from organic impurities and have a plasticity index not greater than 4.

NOTE: Plasticity index limits are not appropriate for hydrated lime and hydraulic cement.

METHODS OF SAMPLING

4.1 Mineral filler shall be sampled as follows:

4.1.1 Powdered Material in Bulk

4.1.1.1 *Bins, Piles, or Cars.*—Either a sampling tube shall be used that takes a core not less than 1 in. (2.5 cm) in diameter and that is of sufficient length to permit the taking of a sample from the top to the bottom of the mass being sampled, or samples shall be taken from holes dug into at least ten separate parts of the mass. The samples so taken shall be thoroughly mixed and quartered, and the samples for testing shall be taken from the material so selected and prepared. A minimum quantity of 50 lb (23 kg) shall be taken for a unit of 30 tons of material, with a proportionate quantity for multiples of this unit, provided that at no time shall less than 50 lb (23 kg) be taken as the original portion. The representative sample shall be mixed and quartered and a sample of not less than 5 lb (2.3 kg) shall be taken for testing.

4.1.1.2 *At Conveyors to or from Bins, Piles, or Cars, at Packing Machines, etc.*—Material shall be taken at regular intervals during the entire time of movement of the mass being sampled. The quantity to be taken at each interval and the number of such intervals shall be so proportioned that the final quantity of material taken shall conform to the requirements prescribed in 4.1.1.

4.1.2 Powdered Material in Packages

4.1.2.1 At least 1 percent of the packages shall be sampled, but in no case shall fewer than five packages be sampled. Individual packages shall be taken from various parts of the unit being sampled.

4.1.2.2 The method of package sampling may be carried out by either of the following two methods, as may be agreed by the contracting parties.

4.1.2.2.1 A 1-lb (450 g) sample shall be taken from the top of each package.

4.1.2.2.2 A sampling tube shall be used that takes a core not less than 1 in. (25 mm) in diameter. The tube shall be inserted into the package being sampled so that it will take a core of material from substantially the entire length of the package.

Samples removed from individual packages shall be thoroughly mixed and quartered, and samples of not less than 5 lb (2.3 kg) each shall be taken for testing.

METHODS OF TEST

5.1 The properties enumerated in this specification shall be determined in accordance with the following AASHO Methods of Test:

Gradation	T 37
Plasticity index	T 90

———o———

Standard Specification for

Penetration Graded Asphalt Cement

AASHO Designation: M 20–70

SCOPE

1.1 This specification covers the following 5 penetration grades of asphalt cement for use in highway construction: 40 to 50, 60 to 70, 85 to 100, 120 to 150, and 200 to 300. For asphalt cements graded by viscosity see AASHO M226.

MANUFACTURE

2.1 Asphalt cement shall be prepared by the refining of crude petroleum by suitable methods.

PROPERTIES

3.1 The asphalt cement shall be homogeneous, free from water, and shall not foam when heated to 175C (347 F).

3.2 The various grades of asphalt cement shall conform to the requirements given in Table 1.

METHODS OF SAMPLING AND TESTING

4.1 Sampling and testing of asphalt cement shall be in accordance with the following standard methods of the American Association of State Highway Officials:

Sampling	T 40
Water	T 55
Penetration	T 49
Solubility in Trichloroethylene	T 44
Ductility	T 51
Flash point	T 48
Thin film oven test	T 179
Spot Test	T 102

Table 1—Requirements for a Specification for Asphalt Cement
AASHO Designation. M20

	Penetration Grade									
	40–50		60–70		85–100		120–150		200–300	
	Min.	Max.	Min.	Max.	Min.	Max.	Min.	Max.	Min.	Max.
Penetration at 77F (25C) 100 g, 5 sec.	40	50	60	70	85	100	120	150	200	300
Flash point, Cleveland Open Cup	450	. .	450	...	450	...	425	...	350	...
Ductility at 77F (25C) 5 cm. per min., cm	100	...	100	...	100	...	100	...	...	...
Solubility in trichloroethylene percent	99	...	99	...	99	...	99	...	99	...
Thin film oven test [illegible] 325F (162.8C) 5 hrs.										
Loss on heating, percent		.80	..	.80	...	1.0	...	1.3	...	1.5
Penetration, of residue, percent of original	58	...	54	...	50	...	46	...	40	...
Ductility of residue at 77F (25C) 5 cm. per min., cm	...	...	50	...	75	...	100	...	100	...
Spot test (when and as specified (see Note 1) with):										
Standard naphtha solvent	Negative for all grades									
Naphtha-xylene solvent, percent xylene	Negative for all grades									
Heptane-xylene, solvent, percent xylene	Negative for all grades									

NOTE. The use of the spot test is optional. When it is specified, the Engineer shall indicate whether the standard naphtha solvent, the naphtha-xylene solvent, or the heptane-xylene solvent will be used in determining compliance with the requirement, and also, in the case of the xylene solvents, the percentage of xylene to be used.

—— o ——

Standard Specification for

Fine Aggregate for Bituminous Paving Mixtures

AASHO DESIGNATION: M 29–70

(ASTM DESIGNATION: D 1073–63(1969))

SCOPE

1.1 This specification covers fine aggregate for use in bituminous paving mixtures.

GENERAL CHARACTERISTICS

2.1 The fine aggregate shall consist of natural sand, or of sand prepared from stone, air-cooled iron blast furnace slag, or gravel, or combinations thereof. It shall consist of hard, tough grains, free from injurious amounts of clay, loam, or other deleterious substances.

GRADING

3.1 Fine aggregate shall conform to one of the gradings shown in Table 1.

3.2 *Uniformity of Grading.*—The gradation of fine aggregate from any one source shall be made upon representative samples of fine aggregate from such sources as are proposed for use. Fine aggregate having a variation in fineness modulus greater than ±0.25 from the fineness modulus of the representative sample may be rejected.

SOUNDNESS

4.1 The fine aggregate, when subjected to five cycles of the soundness test, shall have a weighted loss of not more than 15 per cent when sodium sulfate is used or 20 per cent when magnesium sulfate is used.

Table 1—Grading Requirements
Sée Aggregates

Sieve Size	Amounts Finer than Each Laboratory Sieve (Square Openings), per cent by weight		
	Grading No. 1	Grading No. 2	Grading No. 3
⅜ in. (9.5-mm)	100	...	100
No. 4 (4.75-mm)	95 to 100	100	80 to 100
No. 8 (2.36-mm)	70 to 100	95 to 100	65 to 100
No. 16 (1.18-mm)	40 to 80	85 to 100	40 to 80
No. 30 (0.600-mm)	20 to 65	65 to 90	20 to 65
No. 50 (0.300-mm)	7 to 40	30 to 60	7 to 40
No. 100 (0.150-mm)	2 to 20	5 to 25	2 to 20
No. 200 (0.075-mm)	0 to 10	0 to 5	0 to 10

NOTE: It is recognized that for certain purposes satisfactory results may be obtained with materials not conforming to these specifications. In such cases the use of fine aggregate not conforming to the grading requirements of these specifications may be authorized only under special provisions based on field experience or laboratory studies of the possibility of designing a mixture of materials to be used on the job that will yield bituminous paving mixtures equivalent in quality to the job mix requirements.

METHODS OF SAMPLING AND TESTING

5.1 The aggregate shall be sampled and the properties enumerated in these specifications shall be determined in accordance with the following methods:

5.1.1 *Sampling.*—Methods of Sampling Stone, Slag, Gravel, Sand, and Stone Block for Use as Highway Materials (AASHO: T2).

5.1.2 *Grading.*—Method of Test for Sieve or Screen Analysis of Fine and Coarse Aggregates (AASHO: T 27).

5.1.3 *Fineness Modulus.*—The fineness modulus of the aggregate shall be determined in accordance with the definition of fineness modulus given in the Definitions of Terms Relating to Concrete and Concrete Aggregates (ASTM: C 125). The sieve analysis required for this determination shall be made in accordance with Method T 27.

5.1.4 *Soundness.*—Method of Test for Soundness of Aggregates by Use of Sodium Sulfate or Magnesium Sulfate (AASHO: T 104).

———o———

Standard Specification for

Deformed Billet-Steel Bars for Concrete Reinforcement

AASHO DESIGNATION: M 31–68
(ASTM DESIGNATION: A 615–68)

SCOPE

1.1 This specification covers deformed billet-steel concrete-reinforcement bars. A deformed bar is defined as a bar which is intended for use as reinforcement in reinforced concrete construction. The surface of the bar is provided with lugs or protrusions (hereinafter called "deformations") which inhibit longitudinal movement of the bar relative to the concrete which surrounds the bar in such construction and conform to the provisions of this specification. The standard sizes and dimensions of deformed bars and their number designations shall be those listed in Table 1.

1.2 Bars are of three minimum yield levels: namely, 40,000 psi, 60,000 psi and 75,000 psi, designated as Grade 40, Grade 60, and Grade 75, respectively.

1.3 The weldability of the steel is not part of this specification, but may be subject to agreement between a particular supplier and user.

PROCESS

2.1 The steel shall be made by one or more of the following processes: open-hearth,

basic-oxygen, or electric-furnace.

2.2 The bars shall be rolled from billets or ingots of properly identified heats of open-hearth, basic-oxygen, or electric-furnace steel.

CHEMICAL COMPOSITION

3.1 The steel shall conform to the following requirements as to chemical composition:

Phosphorus, max, percent:
Open-hearth, basic-oxygen, or electric-furnace..... 0.05

LADLE ANALYSIS

4.1 An analysis of each heat of open-hearth, basic-oxygen, or electric-furnace steel shall be made to determine the percentages of carbon, manganese, phosphorus, and

Table 1—Deformed Bar Designation Numbers, Unit Weights, Nominal Dimensions, and Deformation Requirements [a]

Bar Designation No.[b]	Nominal Dimensions[a]				Deformation Requirements, in.		
	Unit Weight, lb/ft	Diameter, in.	Cross-Sectional Area, in.²	Perimeter, in.	Maximum Average Spacing	Minimum Average Height	Maximum Gap (Chord of 12½ percent of Nominal Perimeter)
3.....	0.376	0.375	0.11	1.178	0.262	0.015	0.143
4.....	0.668	0.500	0.20	1.571	0.350	0.020	0.191
5.....	1.043	0.625	0.31	1.963	0.437	0 028	0.239
6.....	1.502	0.750	0.44	2.356	0.525	0.038	0.286
7.....	2.044	0.875	0 60	2.749	0.612	0.044	0.334
8.....	2.670	1.000	0.79	3.142	0.700	0.050	0.383
9.....	3.400	1 128	1.00	3.544	0.790	0.056	0.431
10.....	4.303	1.270	1.27	3.990	0.889	0.064	0.487
11.....	5.313	1.410	1.56	4.430	0.987	0.071	0.540
14.....	7.65	1.693	2.25	5.32	1.185	0.085	0.648
18.....	13.60	2.257	4.00	7.09	1.58	0.102	0.864

[a] The nominal dimensions of a deformed bar are equivalent to those of a plain round bar having the same weight per foot as the deformed bar.
[b] Bar numbers are based on the number of eighths of an inch included in the nominal diameter of the bars.

sulfur, and, for Grade 75, any other elements the manufacturer considers essential to meet the mechanical properties of this specification.

4.2 The analyses prescribed in 4.1 shall be made by the manufacturer from test ingots taken during the pouring of the heats. The chemical composition thus determined shall be reported on request to the purchaser or his representative, and the percentage of phosphorus shall conform to the requirements specified in 3.1.

CHECK ANALYSIS

5.1 An analysis may be made by the purchaser from finished bars representing each heat of open-hearth, basic-oxygen, or electric-furnace steel. The phosphorus content thus determined shall not exceed that specified in 3.1 by more than 25 percent.

REQUIREMENTS FOR DEFORMATIONS

6.1 Deformations shall be spaced along the bar at substantially uniform distances. The deformations on opposite sides of the bar shall be similar in size and shape.

6.2 The deformations shall be placed with respect to the axis of the bar so that the included angle is not less than 45 deg. Where the line of deformations forms an included angle with the axis of the bar of from 45 to and including 70 deg, the deformations shall alternately reverse in direction on each side, or those on one side shall be reversed in direction from those on the opposite side. Where the line of deformation is over 70 deg a reversal in direction is not required.

6.3 The average spacing or distance between deformations on each side of the bar shall not exceed seven tenths of the nominal diameter of the bar.

6.4 The over-all lengths of deformations shall be such that the gap between the

extreme ends of the deformations on opposite sides of the bar shall not exceed 12½ percent of the nominal perimeter of the bar. Where the extreme ends terminate in a longitudinal rib, the width of the longitudinal rib shall be considered the gap. Where more than two longitudinal ribs are involved, the total width of all longitudinal ribs shall not exceed 25 percent of the nominal perimeter of the bar; furthermore, the summation of gaps shall not exceed 25 percent of the nominal perimeter of the bar. The nominal perimeter of the bar shall be 3.14 times the nominal diameter.

6.5 The spacing, height, and gap of deformations shall conform to the requirements prescribed in Table 1.

MEASUREMENTS OF DEFORMATIONS

7.1 The average spacing of deformations shall be determined by dividing a measured length of the bar specimen by the number of individual deformations and fractional parts of deformations on any one side of the bar specimens. A measured length of the bar specimen shall be considered the distance from a point on a deformation to a corresponding point on any other deformation on the same side of the bar. Spacing measurements shall not be made over a bar area containing bar marking symbols involving letters or numbers.

7.2 The average height of deformations shall be determined from measurements made on not less than two typical deformations. Determinations shall be based on three measurements per deformations, one at the center of the over-all length and the other two at the quarter points of the over-all length.

7.3 To indicate adequately the conformity to the dimensional requirements, measurements shall be selected as follows on representative bars taken at random:

7.3.1 For bars No. 3 to 11, inclusive, one bar for each 10 tons of each lot or fraction thereof.

7.3.2 For bars No. 14 and 18, one bar for each 25 tons of each lot or fraction thereof.

7.4 Insufficient height, insufficient circumferential coverage, or excessive spacing of deformations shall not constitute cause for rejection unless it has been clearly established by determinations on each lot that typical deformation height, gap, or spacing do not conform to the minimum requirements prescribed in 6. Requirements for Deformations. No rejection may be made on the basis of measurements if fewer than ten adjacent deformations on each side of the bar are measured.

TENSILE PROPERTIES

8.1 *Grade 40:*

8.1.1 The material shall conform to the requirements as to tensile properties prescribed in Table 2.

8.1.2 The yield point shall be determined by the drop of the beam or halt in the gage of the testing machine.

8.2 *Grade 60 and Grade 75:*

8.2.1 The material shall conform to the requirements as to tensile properties prescribed in Table 3.

8.2.2 The yield strength shall be determined by one of the following methods:

8.2.2.1 Extension under load using dividers with an 8-in. gage length. The extension under load shall be 0.04 in. for Grade 60, and 0.047 in. for Grade 75, and shall be determined by scribing on the specimen an 8-in. gage length, pivoting from a prick-punch mark. The yield load shall be recorded when the total gage length under load becomes 8.04 or 8.047 in., respectively, as measured by the dividers.

8.2.2.2 Extension under load using an autographic diagram method or an extensometer as described in Item (2) of Section 12(*a*) and (*b*) of ASTM Methods and Definitions A 370, for Mechanical Testing of Steel Products. However, the extension under load shall be 0.006 in./in. of gage length (0.6 percent) for Grade 75 or 0.005 in./in. (0.5 percent) for Grade 60.

8.2.2.3 *For Grade 60*—Drop of the beam method, Section 12 (*a*)(*1*) of Methods

A 370, may be applied where the steel tested has a sharp-kneed or well-defined type of yield point.

8.2.3 The percentage of elongation shall be as prescribed in Table 3.

Table 2—Tensile Requirements for Deformed Bars,[a] Grade 40

Tensile strength, min, psi	70 000
Yield point, min, psi	40 000
Elongation in 8 in., min, percent:	
Bar No.	
3	11
4, 5, 6	12
7	11
8	10
9	9
10	8
11, 14, 18	7
Elongation in 2 in., min, percent (test Fig. 6 of A 370):	
Bar No.	
14, 18	9

[a] Plain round bars are available under AASHO M 227, for Carbon Steel Bars Subject to Mechanical Property Requirements.

Table 3—Tensile Requirements

	Grade 60	Grade 75[a]
Tensile strength, min, psi	90 000	100 000
Yield strength, min, psi	60 000	75 000
Elongation in 8 in., min, percent (full size or reduced diameter test specimen):		
Bar No.		
3, 4, 5, 6	9	...
7, 8	8	...
9, 10, 11	7	...
14, 18	7	...
11, 14, and 18	...	5
Elongation in 2 in., min, percent (Fig. 6 of A 370):		
Bar Nos.		
9, 10, 11, 14, 18	9	...
11, 14, and 18	...	6

[a] Grade 75 bars are furnished only in Sizes 11, 14, and 18.

BENDING PROPERTIES

9.1 For bar sizes No. 3 to 11, inclusive, the bend test specimen shall stand being bent, at room temperature, around a pin without cracking on the outside of the bent portion. The requirements for degree of bending and sizes of pins prescribed in Table 4 shall be observed.

9.2 The bend test shall be made on specimens of sufficient length to ensure free bending and with apparatus which provides:

9.2.1 Continuous and uniform application of force throughout the duration of the bending operation,

9.2.2 Unrestricted movement of the specimen at points of contact with the apparatus, and

9.2.3 Close wrapping of the specimen around the pin or mandrel during the bending operation.

9.3 Other methods of bend testing may be used, but failures due to such methods shall not constitute a basis for rejection.

9.4 Bars of size Nos. 14 and 18 shall not be subject to bend test requirements.

TEST SPECIMENS

10.1 Tension test specimens may be either the full section of the bar as rolled or at the option of the manufacturer one of the reduced section type of tests following:

10.1.1 Standard 0.505-in. diameter test specimen, with 2-in. gage length, as described in Fig. 6 of Methods A 370 and from a position in the bar as outlined in Table B-1 of Methods A 370.

10.1.2 Specimens machined to a reduced diameter of not less than ¾ in. for a length of not less than 9 in. with an 8-in. gage length.

10.1.3 The unit stress determinations on full size specimens shall be based on the nominal cross-sectional areas shown in Table 1.

10.2 The bend test specimens, when required, shall be the full section of the bar as rolled.

NUMBER OF TESTS

11.1 For bar sizes No. 3 to 11, inclusive, one tension test and one bend test shall be made of the largest size rolled from each heat. If, however, material from one heat differs by three or more designation numbers one tension and one bend test shall be made from both the highest and lowest designation number of the deformed bars rolled.

11.2 In case of Nos. 14 and 18 bars, one tension test shall be made of each size rolled from each heat.

11.3 If any test specimen develops flaws, it may be discarded and another substituted.

11.4. If the percentage of elongation of any tension test specimen is less than that specified in 8. Tensile Properties, and any part of the fracture is outside the middle third of the gage length, as indicated by scribe scratches marked on the specimen before testing, a retest shall be allowed.

PERMISSIBLE VARIATION IN WEIGHT

12.1 The permissible variation in weight shall not exceed the limits prescribed in Table 5.

FINISH

13.1 The bars shall be free from injurious defects and shall have a workmanlike finish.

MARKING

14.1 When loaded for mill shipment, all bars shall be properly separated and tagged with the manufacturer's heat or test identification number.

14.2 Each producer shall identify the symbols of his marking system.

14.3 All bars produced to this specification shall be identified by a distinguishing set of marks legibly rolled into the surface of one side of the bar to denote in the following order:

14.3.1 *Point of Origin*—Letter or symbol established as the producer's mill designation.

14.3.2 *Size Designation*—Arabic number corresponding to bar designation number of Table 1.

14.3.3 *Type of Steel*—Letter N indicating that the bar was produced from billet steel.

14.3.4 *Minimum Yield Designation*—For Grade 60 bars, either the number 60 or a single continuous longitudinal line through at least 5 spaces offset from the center of the bar side. For Grade 75 bars, either the number 75 or two continuous longitudinal lines through at least 5 spaces offset each direction from the center of the bar.

INSPECTION

15.1 The inspector representing the purchaser shall have free entry, at all times while work on the contract of the purchaser is being performed, to all parts of the manufacturer's works that concern the manufacture of the material ordered. The manufacturer shall afford the inspector, without charge, all reasonable facilities to satisfy him that the material is being furnished in accordance with these specifications. All test (except check analysis) and inspection shall be made at the place of manufacture prior to shipment, unless otherwise specified, and shall be so conducted as not to interfere unnecessarily with the operation of the works.

REJECTION

16.1 Unless otherwise specified, any rejection based on tests made in accordance with 5. Check Analysis, shall be reported to the manufacturer within 5 working days from the receipt of samples by the purchaser.

16.2 Material that shows injurious defects subsequent to its acceptance at the manufacturer's works will be rejected, and the manufacturer shall be notified.

REHEARING

17.1 Samples tested in accordance with Section 5.1, that represent rejected material shall be preserved for two weeks from the date rejection is reported to the manufacturer. In case of dissatisfaction with the results of the tests, the manufacturer may make claim for a rehearing within that time.

Table 4—Bend Test Requirements

NOTE—d = diameter of pin around which specimen is bent and t = diameter of the specimen.

Bar Designation No.	Diameter of Pin for 90-deg Bend		
	Grade 40	Grade 60	Grade 75
3, 4, 5	$d = 3t$	$d = 4t$	...
6, 7	$d = 4t$	$d = 5t$	...
8	$d = 4t$	$d = 5t$	...
9	$d = 5t$	$d = 6t$	...
10	$d = 5t$	$d = 6t$	...
11	$d = 5t$	$d = 6t$	$d = 8t$

Table 5—Permissible Variations from Theoretical Weights

NOTE 1—The theoretical weights for deformed bars listed in Table 1 shall be used to establish conformance to this table.

NOTE 2—Reinforcing bars are evaluated on the basis of nominal weights. In no case shall the overweight of any bar or lot of bars be cause for rejection.

Diameter of Bars	Lot[a] Under, percent	Individual Bar, Under, percent
All	3.5	6

[a] The term "lot" means all bars of the same nominal weight per linear foot contained in an individual shipping release or shipping order.

— o —

Standard Specification for

Cold Drawn Steel Wire for Concrete Reinforcement

AASHTO DESIGNATION: M 32–70

ASTM DESIGNATION: A 82–66

SCOPE

1.1 This specification covers cold-drawn steel wire to be used as such, or in fabricated form, for the reinforcement of concrete, in gages not less than 0.080 in. nor greater than 0.625 in.

BASIS OF PURCHASE

2.1 When wire is ordered by steel wire gage number, the following relation between the steel wire gage number and the diameter in inches shall apply, unless otherwise specified:

4.4 The yield strength shall be determined at an extension of 0.005 in. per in. of gage length. The manufacturer is not required to test for yield strength, but is responsible

for supplying a product that will meet the stipulated limit when tested in accordance with the provisions of 10.3.

4.5 The material shall not exhibit a definite yield point evidenced by a distinct drop of the beam or halt in the gage of the testing machine prior to reaching ultimate tensile load. The purchaser may, at his option, accept this feature as sufficient evidence of compliance with the specified minimum yield strength to forego conducting the yield strength tests covered by 10.3.

BENDING PRODUCTS

5.1 The bend test specimen shall stand being bent cold through 180 deg without cracking on the outside of the bent portion, as follows:

Diameter of Wire, in.	Bend Test
0.3 or under	bend around a pin the diameter of which is equal to the diameter of the specimen
Over 0.3	bend around a pin the diameter of which is equal to twice the diameter of the specimen

TEST SPECIMENS

6.1 Tension and bend test specimens shall be of the full section of the wire as drawn, or in the case of galvanized wire, as galvanized.

NUMBER OF TESTS

7.1 One tension test and one bend test shall be made from each ten tons or less of each size of wire.

7.2 If any test specimen shows defects or develops flaws, it may be discarded and another specimen substituted.

PERMISSIBLE VARIATIONS IN GAGE

8.1 The dimensions of the wire, on any diameter, shall not vary more than plus or minus 0.003 in. from the specified nominal diameter. The difference between the maximum and minimum diameters, as measured on any given cross-section of the wire, shall not be more than 0.003 in.

FINISH

9.1 The wire shall be free from injurious defects and shall have a workmanlike finish with smooth surface.

9.2 Galvanized wire shall be completely covered in a workmanlike manner with a zinc coating, which is recognized in the industry as a "regular" coating.

INSPECTION

10.1 The inspector representing the purchaser shall have free entry, at all times while work on the contract of the purchaser is being performed, to all parts of the manufacturer's works that concern the manufacture of the material ordered. The manufacturer shall afford the inspector, without charge, all reasonable facilities to satisfy him that the material is being furnished in accordance with these specifications.

10.2 Except for yield strength, all tests and inspection shall be made at the place of manufacture prior to shipment, unless otherwise specified. Such tests shall be so conducted as not to interfere unnecessarily with the operation of the works.

10.3. If the purchaser considers it desirable to determine compliance with the yield strength requirements in 4.1, he may have yield strength tests made in a recognized laboratory, or his representative may make the test at the mill if such tests do not interfere unnecessarily with the mill operations.

REJECTION

11.1 Material which shows injurious defects subsequent to its acceptance at the manufacturer's works will be rejected, and the manufacturer shall be notified.

———o———

Standard Specification for

Preformed Expansion Joint Filler for Concrete (Bituminous Type)

AASHO DESIGNATION: M 33–70[1]

SCOPE

1.1 This specification covers bituminous preformed expansion joint filler for use in concrete construction. (See Note 1)

NOTE 1.—Attention is called to the Specifications for Preformed Expansion Joint Fillers for Concrete Paving and Structural Construction (Nonextruding and Resilient Bituminous Types), AASHO M 213 and for Preformed Expansion Joint Fillers for Concrete Paving and Structural Construction (Nonextruding and Resilient Nonbituminous Types), AASHO M 153.

MANUFACTURE

2.1 This product shall consist of a bituminous (asphalt or tar) mastic composition, formed and encased between two layers of bituminous impregnated felt. The mastic shall comprise mineral fillers and reinforcing fibers and may contain thin strips of reinforcing sheet material. The mastic portion (exclusive of the stiffener sheets) shall contain not less than 70 per cent of material more than 6.35 mm (¼ in.) in thickness and 65 per cent for material 6.35 mm (¼ in.) or less in thickness.

GENERAL REQUIREMENTS

3.1 Preformed strips of expansion joint filler shall be of such character as not to be deformed or broken by ordinary handling when exposed to atmospheric conditions and shall not become brittle in cold weather. Pieces of the joint filler that have been damaged shall be rejected.

PROPERTIES

4.1 Distortion at 51.7 C (125 F).—The joint filler shall not show a deflection of more than 25.4 mm (1 in.) when tested in accordance with Section 4 of AASHO T 42.

4.2 Brittleness.—The joint filler shall not crack or shatter when tested in accordance with Section 3 of AASHO T 42. (See Note 2)

NOTE 2.—Expansion joint filler having a nominal thickness of 6.35 mm (¼ in.) or less shall not be subject to a requirement for brittleness.

4.3 *Water Absorption.*—The water absorption of the joint filler, when tested in accordance with Section 2 of AASHO T 42 shall not exceed the following values. (See Note 3)

Nominal Thickness of Joint, (mm) in.	Absorption, max, per cent by weight
(25.4) 1	2.5
(19.0) ¾	3
(12.7) ½	4
(9.5) ⅜	5

NOTE 3.—Expansion joint filler having a nominal thickness of less than 9.5mm (⅜ in.) shall not be subject to a requirement for water absorption.

4.4 *Compression.*—The load required to compress the test specimen to 50 per cent of its thickness before test shall be not less than 0.0070 nor more than 0.527 kgf/mm² (100

[1] The technical requirements of this specification are the same as those of ASTM Specification D 994-53 (1968).

nor more than 750 psi) when the joint filler is tested in accordance with Section 7 of AASHO T 42. (See Note 4)

NOTE 4.—Expansion joint filler having a nominal thickness of less than 12.7mm (½ in.) shall not be subject to a requirement for compression.

DIMENSIONS AND PERMISSIBLE VARIATIONS

5.1 The preformed strips shall conform to the dimensions specified or shown on the plans. Strips of the joint filler that do not conform to the specified dimensions, within the permissible variations of +1.6 mm (+1/16 in.) in thickness, ±3.2 mm (±⅛ in.) in depth, and ±6.4 mm (±¼ in.) in length, shall be rejected.

SAMPLING

6.1 Size of Samples.—Each sample shall consist of sufficient material to provide at least 3 test specimens measuring 50 × 150 mm (2 by 6 in.) and at least 1 test specimen measuring 100 × 100 mm (4 by 4 in.)

6.2 Number of Samples.—One representative sample shall be selected from each shipment of 1000 sq ft or fraction thereof of each thickness ordered.

6.3 Samples shall be packed for transportation in such a manner that there will be no danger of distortion or breakage.

METHODS OF TESTING

7.1 Testing shall be in accordance with the following standard methods of the American Association of State Highway Officials.

(Testing) Preformed Expansion Joint Filler for Concrete—T 42.

Solubility in Carbon Disulfide—T 44.

———— o ————

Standard Specification for

Zinc Coated (Galvanized) Corrugated Iron or Steel Culverts and Underdrains

AASHO DESIGNATION: M 36–70

SCOPE

1.1 This specification covers Zinc Coated (Galvanized) Corrugated Iron or Steel Culverts and Underdrains.

NOTE 1.—This specification is a manufacturing and purchase specification only, and does not include requirements for bedding, backfill, or the relationship between earth cover load and culvert sheet thickness of the pipe. However, experience has shown that the successful performance of this product depends in equal amounts upon the proper selection of the culvert sheet thickness, type of bedding and backfill, control manufacture in the plant, and care in the field construction work. The purchaser of the corrugated iron or steel pipe specified herein is cautioned that he must properly correlate the field requirements with the culvert sheet thickness of the pipe and provide adequate inspection in the manufacturing plant and at the construction site.

TYPES

2.1 Culverts covered by this specification shall be of the following types as specified:

Type I. —Culvert pipes, circular section.

Type II. —Culvert pipes, other than circular section.

Type III.—Underdrain Pipes.

MATERIALS

IRON OR STEEL SHEETS

3.1 The zinc coated iron or steel sheets shall conform to Zinc-Coated (Galvanized) Iron or Steel Sheets for Culverts and Underdrains (AASHO M 218).

ACCEPTED BRANDS OF METAL

4.1 No metal will be accepted under this specification and no bids will be considered for the materials above described until after the sheet manufacturer's certified analysis and manufacturer's guarantee have been passed upon by the Engineer and accepted. Misbranding or other misrepresentation, and nonuniformity of product, will each be considered a sufficient reason to discontinue the acceptance of any brand under this specification and notice sent to the sheet manufacturer of the discontinuance of acceptance of any brand will be considered to be notice to all culvert companies which handle that particular brand. The kind of base metal which it is proposed to furnish shall be designated by the purchaser. One brand, and one brand only, shall be approved for each kind of base metal furnished by each of the actual manufacturers of the sheets.

SHEET MANUFACTURER'S CERTIFIED ANALYSIS

5.1 The manufacturer of each brand shall file with the Engineer a certificate setting forth the name or brand of metal to be furnished, the specified chemical composition, and a typical or average analysis showing the per cent of carbon, manganese, phosphorous, sulphur, silicon, copper and any other elements specified for the particular kind of base metal. The certificate shall be sworn to for the manufacturer by a person having legal authority to bind the company.

SHEET MANUFACTURER'S GUARANTEE

6.1 The manufacturer of the sheets shall submit with the certified analysis a guarantee providing that all metal furnished shall conform to the specification requirements, shall bear a suitable identification brand or mark, and shall be replaced without cost to the purchaser when not in conformity with the specified analysis, sheet thickness or spelter coating; and the guarantee shall be so worded as to remain in effect so long as the manufacturer continues to furnish material.

RIVETS

7.1 All rivets shall be of the same material as the base metal specified for the corrugated sheets. They shall be thoroughly galvanized or sherardized.

FABRICATION

TYPE I PIPE

8.1 Culverts furnished under this type shall be of full circle and shall be fabricated with circumferential corrugation and riveted or resistance spot welded, lap joint construction or with helical corrugations and a continuous lock or welded seam extending from end to end of each length of pipe.

8.2 When specified by the purchaser, the finished pipe shall be factory elongated to the extent specified. The elongation shall be accomplished by the use of a mechanical apparatus which will produce a uniform deformation throughout the length of the section.

CORRUGATIONS

9.1 The corrugations shall form smooth continuous curves and tangents. The radii of curvature of the corrugations shall be at least one-half the depth of the corrugations. The corrugations shall be either annular or spiral. The crest and valleys of annular corrugations shall form circumferental rings (complete or partial) about the axis of the culvert. Spiral corrugations shall form helices about the axis. The direction of the crests and valleys of the spiral corrugations in pipe with diameters greater than 21 inches shall be not less than 60° from the longitudinal axis of the pipe.

DIMENSIONS

10.1 The widths of laps and depth of corrugations shall be as specified in Table 1. Dimensions given for diameter of pipe are nominal. Selection of sheet thickness shall be in accordance with the current design criteria in the Standard Specifications for Highway Bridges.

RIVETED SEAMS

11.1 Rivets shall be of the diameters for the sheet thickness specified in Table 2.

11.2 All rivets shall be driven cold in such a manner that the plates shall be drawn tightly together throughout the entire lap. The center of no rivet shall be closer than twice its diameter from the edge of the metal. All rivets shall have neat, workmanlike, and full hemispherical heads or heads of a form acceptable to the Engineer, shall be driven without bending, and shall completely fill the hole. Longitudinal seams shall be riveted with one rivet in the valley of each corrugation. The longitudinal seams of all pipe 42 inches or more in diameter and all sizes of pipe having one inch depth corrugations shall be double riveted. Circumferential, shop-riveted seams shall have a maximum rivet spacing of 6 inches, measured on centers, except that six rivets will be sufficient in 12-inch pipe. For pipe with one inch deep corrugations, ½ inch diameter bolts and nuts meeting the requirements of ASTM A-449 and ASTM A-563, Grade C, respectively, and galvanized in conformance with ASTM A-153 may be used in lieu of rivets or spot welds on a one for one replacement ratio.

LOCK SEAMS

12.1 Lock seams shall be continuous from end to end of each length of pipe section. Seams shall be fabricated in such a manner that they will develop the full strength of the pipe and not affect shape or nominal diameter of the pipe. Lock seams shall be formed with sufficient pressure to prevent any slippage that would appreciably affect the load carrying capacity of the pipe but without damage to the metal to such an extent that a plane of weakness is created. The metal used in fabricating lock seams shall be one that will permit cold forming without such damage.

WELDED SEAMS

13.1 Welded seam pipe with helical corrugations shall have a continuous welded seam extending from end to end of each length of pipe section. Welding shall be by approved methods utilizing ultra high frequency resistance equipment. Seams shall be welded in such a manner that they will develop the full strength of the pipe and not affect shape or nominal diameter of the pipe. Welded seams shall be controlled such that the combined width of weld and adjacent spelter coating burned by welding does not exceed 3 times the metal thickness. Damage outside this width shall be repaired as required in Section 23. The manufacturer shall certify that the welds have been tested and found satisfactory. Such tests shall be made at least at the beginning of each shift and when a change of metal thickness is made. The tests performed shall be satisfactory to the Engineer. In addition, any indication of cracks, skips or deficient welds found through visual inspection will be cause for rejection.

RESISTANCE SPOT WELDED SEAMS

14.1 Resistance spot welding shall conform to the requirements specified as follows:

14.1.1 Pipe fabricated by resistance spot welding shall be the full circle type with lap joint construction. Spot welds shall be made in such a manner that the metal will be drawn tightly together throughout the lap. The outside edge of each spot weld shall be at least ¼" from the edge of the metal sheets. Length of sheets shall be sufficient to provide nominal diameter plus required lap for resistance spot welded fabrication. Longitudinal seams of all pipe shall be spot welded with one spot weld per corrugation Longitudinal seams of spot welded pipe 42 inches or more in diameter, and all sizes of pipe having one inch deep corrugations, shall be double welded. The spot welds may be placed in either the valley, crest, or tangent of the corrugation. Circumferential spot welded

seams shall have a maximum weld spacing of 6 inches, except that six welds will be sufficient in 12 inch pipe. The cross sectional area of the spot weld shall be equivalent to the cross sectional area of the rivet specified in Section 11.

14.1.2 The welding shall be performed in such a manner that (1) the exterior surfaces of 90 percent or more of the spot welds on a length of pipe shall show no evidence of melting or burning of the base metal; and (2) base metal shall not be exposed when the area adjacent to the electrode contact surface area is wire brushed. Discoloration of the spot weld surfaces will not be cause for rejection.

14.2 Welding equipment shall be of sufficient capacity, of such design and in such condition as to make possible the production of first-class welds. Before being permitted to perform welding on corrugated metal pipe, resistance spot welding machines and operators shall be qualified by means of the test prescribed in the following paragraph.

14.2.1 Tests shall be performed by the manufacturer's shop or by a recognized independent laboratory at no expense to the purchaser. Qualification tests performed by the manufacturer's shop shall be made in the presence of the representative of the purchaser.

14.3 The tests, preparation of specimens, and test procedure shall be as follows:

14.3.1 Three tension shear tests representing each thickness of metal to be used in the manufacture of the pipe shall be performed. Specimens shall be prepared by lapping two strips of corrugated culvert sheet 1½ inch minimum width by 5 inch length and join-

TABLE 1
PIPE REQUIREMENTS

Nominal Inside Diameter[a]	Corrugation Depth Nominal[b]	Minimum Width of Lap
Inches	Inches	Inches
6	¼	1½
8	¼ or ½	1½
10	¼ or ½	1½
12	½	1½
15	½	1½
18	½	1½
21	½	1½
24	½	1½
30	½	2
36	½	2
36	1	2
42	½ or 1	3
48	½ or 1	3
54	½ or 1	3
60	½ or 1	3
66	½ or 1	3
72	½ or 1	3
78	½ or 1	3
84	½ or 1	3
90	1	3
96	1	3
102	1	3
108	1	3
114	1	3
120	1	3

[a] The average inside diameter of circular pipe and pipe to be reformed into pipe arches shall not vary more than one percent or one-half inch, whichever is greater, from the nominal diameter when measured on the inside crest of the corrugations.

[b] Corrugation depth is measured on the outside of the pipe, from a straightedge laid along the crest parallel to the axis of the pipe.

TABLE 2
RIVET DIAMETERS

Sheet Thickness Inches	Corrugation Depth Inches	
	¼ and ½	1
.052	5/16 in.	
.064	5/16 in.	3/8 in.
.079	5/16 in.	3/8 in.
.109	3/8 in.	7/16 in.
.138	3/8 in.	7/16 in.
.168	3/8 in.	7/16 in.

TABLE 3
SHEAR STRENGTH

Thickness of Corrugated Sheet	Minimum Shear Strength
Inches (Approx.)	Pounds
0.064	4,100
0.079	5,200
0.109	7,000
0.138	8,500
0.168	10,000

ing them together by a single spot weld duplicating the size to be used in production. The length of lap shall be 1½ inches. The longer axis of the specimen shall be parallel to the direction of rolling.

14.3.2 The specimens shall be tested in tension to destruction in a standard calibrated testing machine. The minimum shear strength in pounds, as determined by this test, shall be not less than that shown in Table 3 for the thickness of metal used in the test.

14.4 After a machine and operator have been qualified by the foregoing procedure, the following additional tests to insure that qualification is maintained shall be made:

Three tension shear tests shall be made at the start of each work shift.

Three tension shear tests shall be made for each change in sheet thickness.

14.5 One copy of the approved machine setting shall be posted on the machine for use by the machine operator. No settings shall be varied, except weld phase shift and pressure which may be varied by 10 percent plus or minus. If the approved machine settings fail to produce welds of the specified quality within these limits, fabrication shall be stopped until the cause of the trouble is corrected.

TYPE II PIPE

15.1 Culverts furnished under this type shall be of the pipe arch shapes consisting of corrugated metal pipe fabricated with a minimum radius of curvature in accordance with Table 4.

LONGITUDINAL SEAMS

16.1 The lapped longitudinal seams of riveted or resistance spot welded pipe arches shall be staggered so as to alternate not less than ten percent of the periphery.

DIMENSIONS

17.1 Pipe arches shall conform to the rise and span indicated in Table 4 in addition to the requirements of Table 1 for pipe of equivalent size.

TYPE III PIPE

18.1 Culverts furnished under this type shall consist of galvanized corrugated metal pipe intended to be use in underdrains. Unless otherwise specified the pipe shall be perforated.

18.1.1 These specification cover four classes of pipe, as follows:

18.1.1.1 Class I. Helically corrugated pipe with a helical lock seam in diameters 6 to 21 inches, inclusive, with perforations.

18.1.1.2 Class II. Helically corrugated pipe with a welded longitudinal seam in diameters 6 to 21 inches, inclusive, with perforations.

18.1.1.3 Class III. Circumferentially corrugated pipe with riveted lap joints in diameters 8 to 21 inches, inclusive, with perforations.

18.1.1.4 Class IV. Semicircular pipe of 4⅝ inches diameter with top shield of corrugated metal.

18.1.2 The pipe shall be of the full circle type unless otherwise specified herein.

18.1.3 Classes I, II and III shall be Type I pipe as described in 8.1, and except as modified herein, pipe with helical corrugations shall conform in all respects to the requirements of this Specification.

18.1.4 Semicircular pipe Class IV shall be fabricated of an unperforated semicircular bottom section with a top shield of corrugated metal both of not less than 0.0516 inches

thick. The smooth semicircular bottom section shall be 4⅝ inches in diameter and shall have a continuous lip extending outward along each side; the corrugated top shield shall be approximately 6⅜ inches wide including a ¾ inch sloping overhang on each side and shall be secured to the lip of the bottom section by integral tabs spaced at about 3½ inches center to center. The top shield shall have corrugations approximately ⅞ inches center to center and approximately 5/16 inches in depth. This class does not require perforations.

18.1.5 The perforations in perforated pipe for underdrains shall be approximately circular and cleanly cut; shall have nominal diameters of not less than 3/16 inch nor greater than ⅛ inch; and shall be arranged in rows parallel to the axis of the pipe. The perforations shall be located on the inside crests or along the neutral axis of the corrugations. Pipe connected by couplings or bands may be unperforated within 4 inches of each end of each length of pipe. The rows of perforations shall be arranged in two equal groups placed symmetrically on either side of a lower unperforated segment, corresponding to the flow line of the pipe. The spacing of the rows shall be uniform. The distance between the center lines of rows shall be not less than 1 inch.

18.1.5.1 The minimum number of longitudinal rows of perforations, the maximum heights of the centerlines of the uppermost rows above the bottom of the inverts and the inside surface chord lengths of the unperforated segments illustrated in Figure 1 shall be as specified in Table 5.

END FINISH

19.1 The inlet and outlet of all culverts fabricated of sheets having thicknesses of 0.079 inch and less shall be reinforced in a manner approved by the Engineer, when specified.

COUPLING BANDS

20.1 Field joints for each type of corrugated steel pipe shall provide circumferential and longitudinal strength to preserve the pipe alignment, prevent separation of pipe and prevent infiltration of side fill material. The coupling bands shall be made of base metal conforming to AASHO M 218 and shall be similarly zinc coated. Coupling bands may be two

TABLE 4
Pipe Arch Specification Requirements
Pipe-Arches—2⅔″ × ½″ Corrugations

Pipe Arch Size In.	Equiv. Diam. In.	Span* In.	Rise* In.	Min. Corner Radius In.
18 × 11	15	18 − 2	11 + 2	3
22 × 13	18	22 − 2	13 + 2	3
25 × 16	21	25 − 2	16 + 2	3
29 × 18	24	29 − 2	18 + 2	3
36 × 22	30	36 − 2	22 + 2	3
43 × 27	36	43 − 2	27 + 2	3½
50 × 31	42	50 − 2.1	31 + 2.1	4
58 × 36	48	58 − 2.4	36 + 2.4	5
65 × 40	54	65 − 2.7	40 + 2.7	6
72 × 44	60	72 − 3.0	44 + 3.0	7
79 × 49	66	79 − 3.3	49 + 3.3	8
85 × 54	72	85 − 3.6	54 + 3.6	9

* Minus and plus figures in span and rise are tolerances.

TABLE 5
Maximum Heights "H" of the Centerline of the Uppermost Rows Above the Bottom of the Invert and Minimum Lengths of Inner Surface "L" of Unperforated Segments

Diam. of Pipe-Inches	Min. Rows of Perforations	H Inches	L Inches
6	4	2¾	3⅞
8	4	3 11/16	5⅛
10	4	4 1/16	6 1/16
12	6	5½	7 11/16
15	6	6⅞	9⅝
18	6	8¼	11 1/16
21	6	9⅝	13½

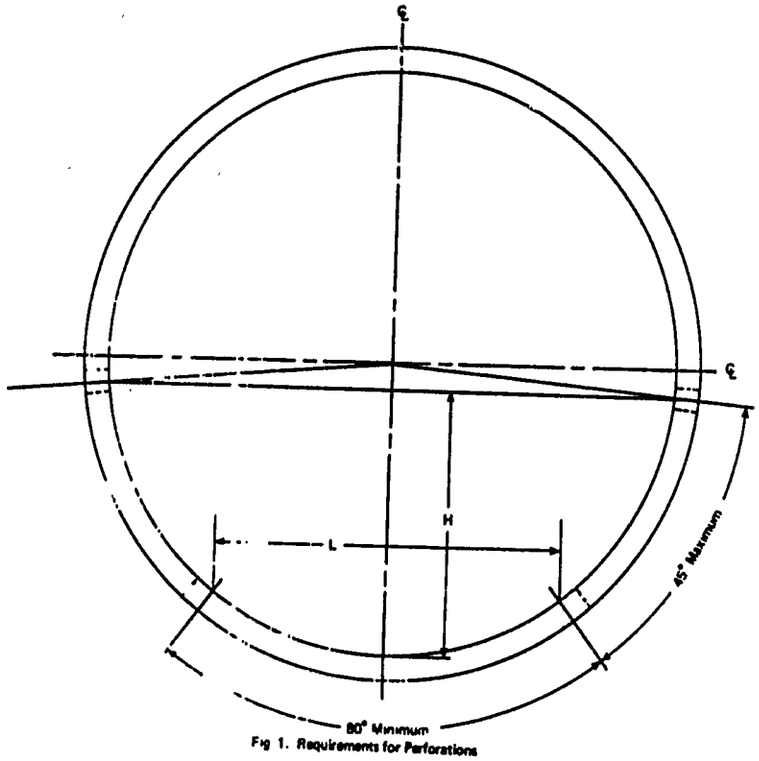

Fig 1. Requirements for Perforations

numerical thicknesses lighter than that used for the pipe but not more than 0.109 nor less than 0.052 inches thick.

20.2 Type I and Type II pipe furnished with circumferential corrugations shall be field jointed with locking bands. The corrugated bands shall be not less than 7 inches wide for diameters of 8 inches to 30 inches, inclusive; not less than 12 inches wide for culverts with diameters 36 inches to 60 inches inclusive; and not less than 24 inches wide for culverts with diameters greater than 60 inches. Bands with projections shall comply to the following paragraph. Such bands shall be so constructed as to lap on an equal portion of each of the culvert sections to be connected, and shall be connected at the ends by galvanized angles having minimum dimensions of 2 inches by 2 inches by 3/16 inch, fastened with ½ inch diameter galvanized bolts.

20.3 Type I and Type II pipe furnished with helical corrugations shall be field jointed preferably with bands with projections. The projections shall conform substantially to the shape and depth of the pipe corrugations and shall be in circumferential rows with one projection for each corrugation of helical pipe. Bands shall be so constructed as to lap on an equal portion of each of the culvert sections to be connected. The bands for pipe diameters of 12 inches to 54 inches, inclusive, shall be at least 10½ inches wide and shall have two circumferential rows of projections; and for pipe diameters 60 inches and greater shall be at least 16½ inches wide and shall have four circumferential rows of projections. The band shall be connected in a manner approved by the Engineer with a suitable fastening device such as galvanized 2 inch by 2 inch by 3/16 inch angles, or integrally or separately formed and attached flanges bolted with ½ inch diameter galvanized bolts, or a wedge lock constructed of the same gage as the band itself.

20.4 Type III pipe may be field joined with bands as described above or with a smooth sleeve type coupler. The sleeve type coupling may be either plastic or galvanized steel, suitable for holding the pipe firmly in alignment without the use of sealing compound or gaskets. Integral formed flanges fastened with 3/8 inch diameter galvanized bolts may be used in lieu of angles on two piece corrugated bands.

20.5 Other equally effective types of coupling bands and/or band fastening devices may be used if approved by the Engineer.

SIZE AND PERMISSIBLE VARIATIONS

NET LENGTH

21.1 The length of culvert specified shall be the net length of the finished culvert which does not include any material used to procure an end finish on the pipe. If the average deficiency in length of any shipment of pipe is greater than 1 percent, the shipment shall be rejected.

WORKMANSHIP AND FINISH

WORKMANSHIP

22.1 It is the essence of these specifications that in addition to compliance with the details of construction the completed pipe shall show careful, finished workmanship in all particulars. Culvert pipe on which the spelter coating has been bruised or broken either in the shop or in shipping, or which shows defective workmanship, shall be rejected. This requirement applies not only to the individual pipe, but to the shipment on any contract as a whole. Among others, the following defects are specified as constituting poor workmanship and the presence of any or all of them in any individual pipe or in general in any shipment shall constitute sufficient cause for rejection:

22.1.1 Uneven laps.
22.1.2 Elliptical shaping.
22.1.3 Variation from a straight center line.
22.1.4 Ragged or diagonal sheared edges.
22.1.5 Loose, unevenly lined or spaced rivets or spot welds.
22.1.6 Poorly formed rivet heads or lock seams
22.1.7 Unfinished ends.
22.1.8 Illegible brand.
22.1.9 Lack of rigidity.
22.1.10 Bruised, scaled, or broken spelter coating.
22.1.11 Dents or bends in the metal itself.

REPAIR OF DAMAGED SPELTER COATING

23.1 Units on which the spelter coating has been burned by welding, or otherwise damaged in fabrication, shall be regalvanized or painted with a zinc dust-zinc oxide paint conforming to Federal Specification TT-P-641.

Regalvanizing shall be done by the hot-dip process or by the metallizing process.

23.2 Hot-Dip Process.—The fabricated unit shall be thoroughly cleaned prior to regalvanizing. A coating of spelter shall then be applied by the hot-dip process.

23.3 Metallizing Process.—The portion of the unit on which the spelter coating has been burned or damaged shall be thoroughly cleaned by blasting with sharp sand or steel grit. The blasted area shall extend at least ½ inch over the undamaged section of galvanized coating. The blasted areas shall be coated with zinc within 24 hours after blasting. Should there be a delay of more than 24 hours or should any of the cleaned portions become soiled prior to metallizing, these sections shall be reblasted.

23.3.1 Zinc wire containing not less than 99.98 per cent zinc shall be used in the metallizing operation. The pure zinc coating applied to the blasted section shall have a thickness of not less than 0.005 in. (2.98 oz. per sq. ft.) over the damaged section and shall taper off to zero thickness at the edge of the blasted undamaged section.

23.3.2 The metallizing shall be done so that the completed pipe shall show careful, finished workmanship in all particulars. Pipe, which, in the opinion of the Engineer, have

not been cleaned or coated satisfactorily, shall be rejected. If the Engineer so elects the metallizing shall be done in his presence.

INSPECTION

24.1 The pipe fabricator shall furnish a Certificate of Compliance for each shipment for each project, showing the quantities of fabricated material. The Certificate of Compliance shall state that representative samples of the listed materials have been tested and that the test results conform to the requirements outlined herein. Test results shall be maintained and be made available as provided in Section 14.1 of AASHO M 218.

24.1.1 The Engineer or his representative shall have free access to the fabricating plant for inspection and every facility shall be extended to him for this purpose. This inspection shall include an examination of the culvert pipe for the items in paragraph 22 including the corrugation depth, minimum width of lap and minimum outside circumference.

24.1.2 On a random basis, samples 2.25 ± 0.01 inches square, or 2.54 ± 0.01 inches in diameter shall be taken for chemical analysis and spelter coating measurement for check purposes. Those samples will be secured from fabricated pipe or from sheets or coils of the same material used in fabrication of the pipe.

24.2 The weight of coating shall be determined in accordance with AASHO T 65.

———— o ————

Standard Specification for

Rail-Steel Deformed Bars for Concrete Reinforcement

AASHO DESIGNATION: M 42–70

SCOPE

1.1 This specification covers deformed rail-steel concrete-reinforcement bars. A deformed bar is defined as a bar which is intended for use as reinforcement in reinforced-concrete construction. The surface of the bar is provided with lugs or protrusions (hereinafter called "deformations") which inhibit longitudinal movement of the bars relative to the concrete which surrounds the bars in such construction and conforms to the provisions of this specification. The standard sizes and dimensions of deformed bars and their number designations shall be those listed in Table 1.

1.2 Bars are of two minimum yield levels: namely, 50,000 psi and 60,000 psi, designated as Grade 50 and Grade 60, respectively.

1.3 The weldability of the steel is not part of this specification, but may be subject to agreement between a particular supplier and user.

NOTE 1—The values stated in U.S. customary units are to be regarded as the standard. The metric equivalents of U.S. customary units given in the appendix may be approximate.

MANUFACTURE

2.1 The bars shall be rolled from standard section Tee rails. No other materials such as those known by the terms "rerolled", "rail-steel equivalent" and "rail-steel quality" shall be substituted.

REQUIREMENT OF DEFORMATIONS

3.1 Deformations shall be spaced along the bar at substantially uniform distances. The deformations on opposite sides of the bar shall be similar in size and shape.

TABLE 1
Deformed Bar Designation Numbers, Unit Weights, and Nominal Dimensions and Deformation Requirements

Bar Designation No.[a]	Unit Weight, lb/ft	Nominal Dimensions[b]			Deformation Requirements, in.		
		Diameter, in.	Cross-Sectional Area, in.²	Perimeter, in.	Maximum Average Spacing	Minimum Average Height	Maximum Gap (Chord of 12½ percent of Nominal Perimeter)
3.....	0.376	0.375	0.11	1.178	0.262	0.015	0.143
4.....	0.668	0.500	0.20	1.571	0.350	0.020	0.191
5.....	1.043	0.625	0.31	1.963	0.437	0.028	0.239
6.....	1.502	0.750	0.44	2.356	0.525	0.038	0.286
7.....	2.044	0.875	0.60	2.749	0.612	0.044	0.334
8.....	2.670	1.000	0.79	3.142	0.700	0.050	0.383
9.....	3.400	1.128	1.00	3.544	0.790	0.056	0.431
10.....	4.303	1.270	1.27	3.990	0.889	0.064	0.487
11.....	5.313	1.410	1.56	4.430	0.987	0 071	0.540

[a] Bar numbers are based on the number of eighths of an inch included in the nominal diameter of the bars.
[b] The nominal dimensions of a deformed bar are equivalent to those of a plain round bar having the same weight per foot as the deformed bar.

TABLE 2
Tensile Requirements

	Grade 50[a]	Grade 60
Tensile strength, min, psi	80 000	90 000
Yield strength, min, psi	50 000	60 000
Elongation in 8 in., min, percent	1 000 000 / tensile strength[b]	1 000 000 / tensile strength[c]

[a] Plain round bars are available under ASTM Specification A 499, for Hot-Rolled Rail Carbon Steel Bars and Shapes.[1]
[b] See 5.3 and 5.4.
[c] Limited to 5 percent on bars. Nos. 3, 4, 5, 6, 7 and 8 to 4½ percent on bars Nos. 9, 10, and 11.

3.2 The deformations shall be placed with respect to the axis of the bar so that the included angle is not less than 45 deg. Where the line of deformations forms an included angle with the axis of the bar of from 45 to and including 70 deg, the deformations shall alternately reverse in direction on each side, or those on one side shall be reversed in direction from those on the opposite side. Where the line of deformation is over 70 deg, a reversal in direction is not required..

3.3 The average spacing or distance between deformations on each side of the bar shall not exceed seven tenths of the nominal diameter of the bar

3.4 The over-all length of deformations shall be such that the gap between the extreme ends of the deformations on opposite sides of the bar shall not exceed 12½ percent of the nominal perimeter of the bar. Where the extreme ends terminate in a longitudinal rib, the width of longitudinal rib shall be considered the gap. Where more than two longitudinal ribs are involved, the total width of all longitudinal ribs shall not exceed 25 percent of the nominal perimeter of the bar; furthermore, the summation of gaps shall not exceed 25 percent of the nominal perimeter of the bar. The nominal perimeter of the bar shall be 3.14 times the nominal diameter.

3.5 The spacing, height, and gap of deformations shall conform to the requirements prescribed in Table 1.

MEASUREMENTS OF DEFORMATIONS

4.1 The average spacing of deformations shall be determined by dividing a measured length of the bar specimen by the number of individual deformations and fractional parts of deformations on any one side of the bar specimens. A measured length of the bar specimen shall be considered the distance from a point on a deformation to a corresponding point on any other deformation on the same side of the bar. Spacing measurements shall not be made over a bar area containing bar marking symbols involving letters or numbers.

4.2 The average height of deformations shall be determined from measurements made on not less than two typical deformations. Determinations shall be based on three measure-

[1] *Book of ASTM Standards*, Part 3.

ments per deformation, one at the center of the over-all length and the other two at the quarter points of the over-all length

4.3 To indicate adequately the conformity to the dimensional requirements, measurements shall be made as follows on representative bars taken at random. For bars No. 3 to 11, inclusive, one bar for each 10 tons of each lot (Note 2) or fraction thereof.

NOTE 2—A lot is defined as all the bars of one bar number and pattern of deformation contained in an individual shipping release or shipping order.

4.4 Insufficient height, insufficient circumferential coverage, or excessive spacing of deformations shall not constitute cause for rejection unless it has been clearly established by determinations on each lot that average deformation height, gap or spacing do not conform to the minimum requirements prescribed in 3. Requirements for Deformations. No rejection may be made on the basis of measurements if fewer than ten adjacent deformations on each side of the bar are measured.

TENSILE PROPERTIES

5.1 The material shall conform to the requirements as to tensile properties prescribed in Table 2.

5.2 The yield strength shall be determined by the drop of the beam or halt in the gage of the testing machine

5.3 For deformed bars of Grade 50 over No. 6 bar (nominal diameter ¾ in.) a deduction from the percentage of elongation prescribed in Table 2 of 1.00 percentage points shall be made for each increase in bar number to a minimum of 5 percent.

5.4 For No. 3 deformed bars of Grade 50 (nominal diameter ⅜ in.) a deduction from the percentage of elongation prescribed in Table 2 of 1.00 percentage points shall be made.

BENDING PROPERTIES

6.1 The bend test specimen shall stand being bent, at room temperature, around a pin without cracking on the outside of the bent portion. The bars shall be bent 90° around a pin having a diameter 6 times the diameter of the specimen.

6.2 The bend test shall be made on specimens of sufficient length to ensure free bending and with apparatus which provides:

6.2.1 Continuous and uniform application of force throughout the duration of the bending operation,

6.2.2 Unrestricted movement of the specimen at points of contact with the apparatus, and

6.2.3 Close wrapping of the specimen around the pin or mandrel during the bending operation

6.3 Other methods of bend testing may be used, but failures due to such methods shall not constitute a basis for rejection.

TEST SPECIMENS

7.1 Tension and bend test specimens from deformed bars shall be of the full section of bars as rolled. For tension tests the unit stress determination shall be based on the nominal cross sectional areas shown in Table 1.

NUMBER OF TESTS

8.1 One tension test and one bend test shall be made from each lot of 10 tons or fraction thereof of each size or bar designation number rolled from rails varying not more than 10 lb/yd in nominal weight.

8.2 If any test specimen develops flaws, it may be discarded and another specimen substituted.

8.3 If the percentage of elongation of any tension test specimen is less than that specified in 5. Tensile Properties, and any part of the fracture is outside the middle third of the gage length, as indicated by scribe scratches marked on the specimen before testing, a retest shall be allowed.

PERMISSIBLE VARIATIONS IN WEIGHT

9.1 The permissible variations from unit weights of Table 1 shall not exceed the following limits:

Deformed bars, all sizes, percent:	
Lot (Note 4) under	3.5
Individual bar, under	6

NOTE 3—Reinforcing bars are evaluated on the basis of nominal weights. In no case shall the overweight of any bar or lot of bars be cause for rejection.

NOTE 4—The term "lot" means all bars of the same nominal weight per linear foot contained in an individual shipping release or shipping order.

FINISH

10.1 The bars shall be free from injurious defects and shall have a workmanlike finish.

MARKING

11.1 When loaded for mill shipment, all bars shall be properly separated and tagged with the manufacturer's test identification number.

11.2 Each producer shall identify the symbols of his marking system.

11.3 All bars produced to this specification shall be identified by a distinguishing set of marks legibly rolled into the surface of one side of the bar to denote in the following order:

11.3.1 *Point of Origin*—Letter or symbol established as the producer's mill designation.

11.3.2 *Size Designation*—Arabic number corresponding to bar designation number of Table 1.

11.3.3 *Type of Steel*—A rail symbol indicating that the bar was produced from rail steel.

11.3.4 *For Grade 60 Bars Only*—Minimum yield designation—either the number 60 or a single continuous longitudinal line through at least 5 spaces offset from the center of the bar side.

INSPECTION

12.1 The inspector representing the purchaser shall have free entry, at all times while work on the contract of the purchaser is being performed, to all parts of the manufacturer's works that concern the manufacture of the material ordered. The manufacturer shall afford the inspector, without charge, all reasonable facilities to satisfy him that the material is being furnished in accordance with this specification. All tests and inspection shall be made at the place of manufacture prior to shipment unless otherwise specified, and shall be so conducted as not to interfere unnecessarily with the operation of the works.

REJECTION

13.1 Material that shows injurious defects subsequent to its acceptance at the manufacturer's works will be rejected, and the manufacturer shall be notified.

APPENDIX

A1. METRIC EQUIVALENTS

A1.1 Table A1 contains the metric equivalents of the U.S. customary units used in the body of the standard.

(See Page 26 for Table 1)

TABLE A1—METRIC EQUIVALENTS

Inches to Millimeters

in.	mm[a]	Read, mm	in.	mm[a]	Read, mm	in.	mm[a]	Read, mm
0.015	0.381	0.38	0.350	8.890	8.9	0.987	25.070	25.1
0.020	0.508	0.51	0.375	9.525	9.5	1.000	25.400	25.4
0.028	0.711	0.71	0.383	9.728	9.7	1.128	28.651	28.7
0.038	0.965	0.97	0.431	9.947	10.0	1.178	29.920	29.9
0.044	1.008	1.01	0.437	10.100	10.1	1.270	32.258	32.3
0.050	1.270	1.27	0.487	11.370	11.4	1.410	35.814	35.8
0.056	1.422	1.42	0.500	12.700	12.7	1.571	39.903	39.9
0.064	1.616	1.62	0.540	13.616	13.6	1.963	49.86	49.9
0.071	1.803	1.80	0.612	15.545	15.6	2.356	59.84	59.8
0.143	3.532	3.5	0.625	15.875	15.9	2.749	69.82	69.8
0.191	4.851	4.9	0.700	17.780	17.8	3.142	79.81	79.8
0.239	6.071	6.1	0.750	19.050	19.1	3.544	90.02	90.0
0.262	6.655	6.7	0.790	20.066	20.1	3.990	101.35	101.4
0.286	7.264	7.3	0.875	22.225	22.2	4.430	112.52	112.5
0.334	8.474	8.5	0.889	22.581	22.6			

Square Inches to Square Centimeters

in.²	cm²	in.²	cm²	in.²	cm²
0.11	0.710	0.44	2.840	1.00	6.452
0.20	1.290	0.60	3.871	1.27	8.194
0.31	2.000	0.79	5.100	1.56	10.065

Unit Weight in Pounds per Foot to Grams per Centimeter

lb/ft	g/cm	lb/ft	g/cm	lb/ft	g/cm
0.376	5.595	1.502	22.351	3.40	49.600
0.668	9.941	2.044	30.417	4.303	64.033
1.043	15.521	2.670	39.731	5.313	79.063

Pounds per Square Inch to Kilograms-Force per Square Millimeter

psi	kgf/mm²	psi	kgf/mm²
50 000	35 154	80 000	56.245
60 000	42.184	90 000	63.276

[a] Since 0.01 mm approximates 0.0004 in. and is not effective as a commercial or practical measurement, it is recommended the decimal millimeter be rounded to the nearest 0.10 except where a dial gage is used with 0.001 reading as on deformation heights, these should be rounded to the nearest 0.01 mm

—— o ——

Standard Specification for

Standard Sizes of Coarse Aggregate for Highway Construction

AASHO DESIGNATION: M 43–54

(ASTM DESIGNATION: D 448–54)

SCOPE

1.1 This specification covers standard size designations and maximum permissible ranges in mechanical analysis for standard sizes of coarse aggregate and screenings for use in the construction or maintenance of various types of highways and highway structures.

MANUFACTURE

2.1 The standard sizes of coarse aggregate prescribed in this specification may be manufactured by means of any suitable commercial process and by the use of any sizes or shapes of plant screen openings necessary to produce the designated sizes within the limits of the mechanical analyses specified in Section 3.

STANDARD SIZES

3.1 Standard sizes of coarse aggregate shall comply with the sizes given in Table 1.

All sizes shall be determined by means of laboratory sieves having square openings and conforming to the Standard Specification for Sieves for Testing Purposes (AASHO M 92).

Sizes of Coarse Aggregates

Size number	Nominal size square openings (1)	Amounts finer than each laboratory sieve (square openings), percentage by weight																		
		4	3½	3	2½	2	1½	1	¾	½	⅜	No. 4	No. 8	No. 16	No. 50	No. 100
1	3½ to 1½															
2	2½ to 1½															
2A	2½ to ¾															
3	2 to No. 4															
357	2 to ⅜															
4	1½ to ⅜															
467	1½ to No. 4															
5	1 to ½															
56	1 to No. 4															
57	1 to ⅜															
6	¾ to No. 4															
67	¾ to ⅜															
68	¾ to No. 8															
7	½ to No. 4															
78	½ to No. 8															
8	⅜ to No. 8															
89	⅜ to No. 16															
9	No. 4 to No. 16															
10	No. 4 to 0 (2)	100	90 to 100	100	25 to 60	35 to 70	0 to 15	0 to 5	0 to 5	0 to 5						
				100	90 to 100	90 to 100	25 to 60	0 to 10	0 to 5	0 to 5						
				100	90 to 100	95 to 100	35 to 70	0 to 10	0 to 5	0 to 5						
					100	100	90 to 100	35 to 70	0 to 15							
						100	95 to 100	20 to 55	0 to 10							
							100	90 to 100	40 to 75	15 to 35	0 to 5					
							100	95 to 100		25 to 60	0 to 10					
								100	90 to 100	20 to 55	0 to 15					
								100	90 to 100		0 to 5					
								100	90 to 100		20 to 55	0 to 10				
								100	90 to 100		30 to 65	5 to 20				
									100	90 to 100	40 to 70	0 to 15	0 to 5			
									100	90 to 100	40 to 75	5 to 25	0 to 5			
										100	85 to 100	10 to 30	0 to 10			
										100	90 to 100	20 to 55	0 to 10	0 to 5	0 to 5	
												85 to 100	5 to 30	0 to 10	0 to 5	10 to 30
												85 to 100	10 to 40			

(1) In inches, except where otherwise indicated. Numbered sieves are those of the United States Standard Sieve Series.
(2) Screenings.

8" DIAMETER BRASS SIEVES

U.S.S.-ASTM Designations

Sieve Size or Number	*Micron*	*Sieve Opening Millimeters*	*Sieve Opening Inches*
COARSE SERIES			
4"	....	101.6	4.00
3½"	....	88.9	3.50
3"	....	76.2	3.00
2½"	....	63.5	2.50
2"	....	50.8	2.00
1¾"	....	44.4	1.75
1½"	....	38.1	1.50
1¼"	....	31.7	1.25
1"	....	25.4	1.00
⅞"	....	22.2	0.875
¾"	....	19.1	0.750
⅝"	....	15.9	0.625
½"	....	12.7	0.500
7/16"	....	11.1	0.438
⅜"	....	9.52	0.375
5/16"	....	7.93	0.312
FINE SERIES			
3 (¼")	....	6.35	0.250
3½	5660	5.66	0.223
4	4760	4.76	0.187
5	4000	4.00	0.157
6	3360	3.36	0.132
7	2830	2.83	0.111
8	2380	2.38	0.0937
10	2000	2.00	0.0787
12	1680	1.68	0.0661
14	1410	1.41	0.0555
16	1190	1.19	0.0469
18	1000	1.00	0.0394
20	840	0.84	0.0331
25	710	0.71	0.0280
30	590	0.59	0.0232
35	500	0.50	0.0197
40	420	0.42	0.0165
45	350	0.35	0.0138
50	297	0.297	0.0117
60	250	0.250	0.0098
70	210	0.210	0.0083
80	177	0.177	0.0070
100	149	0.149	0.0059
120	125	0.125	0.0049
140	105	0.105	0.0041
170	88	0.088	0.0035
200	74	0.074	0.0029
230	62	0.062	0.0024
270	53	0.053	0.0021
325	44	0.044	0.0017
400	37	0.037	0.0015

Standard Specification for

Aggregate for Masonry Mortar

AASHO DESIGNATION: M 45–70

(ASTM DESIGNATION: C 144–70)

SCOPE

1.1 This specification covers aggregate for use in masonry mortar.

MATERIAL

2.1 Aggregate for use in masonry mortar shall consist of natural sand or manufactured sand. Manufactured sand is the product obtained by crushing stone, gravel, or air-cooled iron blast-furnace slag.

GRADING

3.1 Aggregate for use in masonry mortar shall comply with the following limits:

Item	Limit
Per cent Passing Sieve:	
No. 4 (4.75-mm)	100
No. 8 (2.36-mm)	95 to 100
No. 16 (1.18-mm)	25 max
No. 50 (0.300-mm)	10 max
Fineness modulus	1.6 to 2.5
Water demand ratio by weight	0.65 max

3.2 If the fineness modulus varies by more than 0.20 from the value assumed in selecting proportions for the mortar, the aggregate shall be rejected unless suitable adjustments are made in proportions to compensate for the change in grading.

NOTE 1.—For heavy construction employing joints thicker than ½ in. (13 mm), a coarser aggregate may be desirable; for such work a fine aggregate conforming to AASHO M 6—For Fine Aggregate for Portland Cement Concrete is satisfactory. For unusually thin joints, such as occur in units having cut or ground edges, an aggregate conforming to the requirements of these specifications, but with not less than 100 per cent passing the No. 8 (2.36-mm) sieve and 95 per cent passing the No. 16 (1.18-mm) sieve, should be used.

COMPOSITION

4.1 *Deleterious Substances*—The amount of deleterious substances in aggregate for masonry mortar, each determined on independent samples complying with the grading requirements of 3. Grading, shall not exceed the following:

Item	Maximum Permissible Percentage by Weight
Friable particles	1.0
Lightweight particles, floating on liquid having a specific gravity of 2.0	0.5[a]

[a] This requirement does not apply to blast-furnace slag aggregate.

4.2 *Organic Impurities:*

4.2.1 The aggregate shall be free of injurious amounts of organic impurities. Except as herein provided, aggregates subjected to the test for organic impurities and producing a color darker than the standard shall be rejected.

4.2.2 Aggregate failing in the test may be used, provided that the discoloration is due principally to the presence of small quantities of coal, lignite, or similar discrete particles.

4.2.3 Aggregate failing in the test may be used provided that, when tested for the effect of organic impurities on strength of mortar, the relative strength at 7 and 28 days calculated in accordance with Section 10 of AASHO T 71, Test for Effect of Organic Impurities in Fine Aggregate on Strength of Mortar, is not less than 95 per cent.

SOUNDNESS

5.1 Except as herein provided, aggregate subjected to five cycles of the soundness test shall show a loss, weighted in accordance with the grading of a sample complying with the limitations set forth in 3. Grading, not greater than 10 per cent when Sodium Sulphate is used and 15 per cent when magnesium sulfate is used.

5.2 Aggregate failing to meet the requirements of 5.1 may be accepted, provided that mortar of comparable properties made from similar aggregates from the same source has been exposed to weathering, similar to that to be encountered, for a period of more than five years without appreciable disintegration.

METHODS OF SAMPLING AND TESTING

6.1 The aggregate shall be sampled and tested in accordance with the following procedures, except as otherwise provided in these specifications:

6.1.1 *Sampling*—AASHO T2, Sampling Stone, Slag, Gravel, Sand, and Stone Block for Use as Highway Materials

6.1.2 *Sieve Analysis*—AASHO T 27, Test for Sieve or Screen Analysis of Fine and Coarse Aggregates

6.1.3 *Amount of Material Finer Than No. 200 Sieve*—AASHO T 11, Test for Materials Finer Than No. 200 Sieve in Mineral Aggregates by Washing.

6.1.4 *Water Demand*—Water-cement ratio by weight of mortar proportioned and tested in accordance with Section 20 of AASHO M 150, for Masonry Cement, with the following exceptions:

6.1.4.1 Use 420 g masonry cement, 1440 g of the sand under test (saturated-surface-dry) and sufficient water to produce a flow of 110 ± 5.

6.1.4.2 Use masonry cement conforming to AASHO M 150. If the air content of the mortar is more than 15 per cent (AASHO M 150, Section 21 and 22), blend the masonry cement with portland cement conforming to AASHO M 85, for Portland Cement in such proportion that the air content of the mortar is between 12 and 15 per cent.

6.1.5 *Organic Impurities*—AASHO T 21, Test for Organic Impurities in Sands for Concrete.

6.1.6 *Effect of Organic Impurities on Strength*—AASHO T 21.

6.1.7 *Friable Particles.*—AASHO T 112, Test for Friable Particles in Aggregates.

6.1.8 *Lightweight Constituents.*—AASHO T 113, Test for Lightweight Pieces in Aggregates.

6.1.9 *Fineness Modulus*—The fineness modulus, as defined in the ASTM C 125, Terms Relating to Concrete and Concrete Aggregates, is obtained by adding the total percentages shown by the sieve analysis to be retained on each of the following sieves, and dividing the sum by 100:

No. 100 (0.150 mm)	No. 16 (1.18 mm)
No. 50 (0.300 mm)	No. 8 (2.36 mm)
No. 30 (0.600 mm)	No. 4 (4.75 mm)

6.1.10 *Soundness*—AASHO T 104, Test for Soundness of Aggregates by Use of Sodium Sulfate or Magnesium Sulfate.

———— o ————

Standard Specification for

Asphalt Plank

AASHO DESIGNATION: M 46–70

(ASTM DESIGNATION: D517–70)

SCOPE

1.1 This specification covers asphalt plank of two types as used for bridge floors:

1.1.1 Plain asphalt plank, and
1.1.2 Mineral-surfaced asphalt plank.

NOTE.—Plain asphalt plank conforming to this specification is also suitable for waterproofing protection where a solid bridge floor carries ballasted railroad track.

MANUFACTURE

2.1 Asphalt plank shall be formed from a mixture of asphalt, fiber, and mineral aggregate in such manner as to produce a uniformly dense mass.

MINERAL SURFACING

3.1 In the case of mineral-surfaced asphalt plank, at least 15 oz per sq ft of tough, hard, durable, coarse aggregate (well-graded from No. 4 (4.75-mm) to ¾-in. (19.0-mm) square-opening sieves) shall be embedded under pressure into one surface of the freshly-formed hot plank to such a depth that none extends above the intended wearing surface. The top surface of the mineral surfacing shall not be covered with the matrix of the plank surface.

WORKMANSHIP

4.1 The asphalt plank shall be free from defects affecting its serviceability and appearance; it shall have straight edges and square corners.

ASPHALT CEMENT

5.1 The asphalt cement shall have such characteristics that, when combined with the other ingredients, a plank of desired quality will result.

FIBER

6.1 The fibrous material shall consist of finely divided whole threads or fiber free from lumps, and when used it shall be in a flocculent condition. This fabric and fibrous material shall be free from all foreign materials such as metal, leather, straw, sawdust, cornstalks, or other deleterious materials.

MINERAL FILLER

7.1 The mineral filler shall consist of finely crushed slate, limestone, asbestos, silica, or other aggregate which has been proven suitable for use with asphalt cement in constructing pavement wearing surfaces.

DIMENSIONS

8.1 Asphalt plank shall have the dimensions specified or shown on the plans. Tolerances of ±1/16 in. in thickness, ±⅛ in. in width, and ±¼ in. in length will be permitted.

NOTE.—The following thicknesses are recognized as standard: ¾ in., 1 in., 1¼ in., 1½ in., and 2 in.

ABSORPTION

9.1 The absorption of asphalt plank shall not exceed 1.0 per cent by weight.

BRITTLENESS

10.1 At least 80 per cent of the specimens of each thickness of plank tested shall not show any deterimental cracking when tested in accordance with the method described in Section 16.

HARDNESS

11.1 The hardness of the plank, when tested in accordance with the method prescribed in Section 17, shall meet the following requirements:

Temperature deg C (F)	Load, lb	Penetration, in.
46 (115)	50	not more than 0.25
25 (77)	200	not more than 0.25
4 (39)	1000	not less than 0.10

SAMPLING AND METHODS OF TESTING

SAMPLING

12.1 For purpose of tests, three planks shall be taken at random by the purchaser for each 1000 planks, or fraction thereof, of each thickness included in the shipment.

INSPECTION

13.1 Plank from each lot shall be examined for appearance, straightness of edges, and squareness of corners, and measured for width and length. They shall also be calipered at four scattered points each, with a micrometer having flat bearing surfaces at both contact points or not less than ¼ in. in diameter. The average of the readings shall be considered the thickness of the plank.

WEIGHT OF MINERAL SURFACING

14.1 The weight of mineral aggregate shall be determined by removing the mineral surfacing aggregate from not less than 1 sq ft of mineral surfaced asphalt plank. The aggregate shall be cleaned with any suitable solvent, dried, and sieved on a No. 8 (2.36-mm) sieve. The amount of aggregate on the sieve shall be weighed and the weight of aggregate per square foot determined.

ABSORPTION TEST

15.1 A specimen 2 by 6 in. shall be cut from the asphalt plank in such a manner that all edges are freshly cut. The specimen shall be accurately weighed to the nearest 0.10 g, immersed in water for 24 hr, removed, and the surface water wiped off with a slightly dampened cloth. The specimen shall then be weighed to the nearest 0.10 g and the percentage of absorption determined. The time elapsing between the removal of the specimen from the bath and its weighing shall not exceed 1 min.

BRITTLENESS TEST

16.1 Two 6- by 6-in. specimens shall be cut from each of the three sample planks selected in accordance with Section 12. Five of these specimens shall be tested as follows: The specimens shall be immersed in a water bath and maintained at a temperatrue of 39 to 43 F (4 to 6 C) for not less than 3 hr, and then tested immediately upon their removal from the water bath. A smooth, common nail of the size specified in Table 1 shall be driven into the face at each of two diagonally opposite corners of the specimen not less than 1½ in. nor more than 2 in. from each edge, but not directly over a piece of mineral surfacing aggregate. The specimen shall be supported over its entire base with a timber block 7 by 7 by 1½ in. and the nails shall be driven vertically with repeated blows from a 10-lb weight falling freely from a constant height of 20 in. above the level of the initial top of the nail or striking assembly. The height shall not be adjusted to compensate for the increased fall caused by the penetration of the nail. The nails shall be supported by a collar or other similar assembly that will hold the nail in a vertical position without friction. Should a nail strike a piece of aggregate covered by the planking matrix, as shown by bending of the nail or by its deflection from the vertical, the specimen shall be discarded and the test repeated on a new specimen. The nails shall penetrate through the asphalt plank, without deterimental cracking, to a depth of not less than 1 in. into the timber block. Cracking shall be considered detrimental when the cracks extend to a point nearer than ½-in to an edge.

M 46

TABLE 1

Nail Sizes Required for Brittleness Test

Thickness of Asphalt Plank, in.	Nail Size	A.S &W. Gage No.	Diameter
¾	12 d	9	0.148
1	16 d	8	0.162
1¼	20 d	6	0.192
1½	30 d	5	0.207
2	30 d	5	0.207

HARDNESS TEST

17.1 The hardness of the plank shall be determined by means of a penetrometer in which the pin in contact with the plank during the test is a right cylinder ⅝ in. in diameter for a distance of at least 1½ in. from its lower end. The specimen shall be kept submerged in water maintained at the temperature specified for a time sufficient to insure that the specimen has attained this temperature throughout. The test shall be made with the specimen submerged in water at the temperatures indicated in Section 11 and supported on a smooth, solid support not less than 2 in. in diameter and concentric with the contact pin of the penetrometer. The tests shall be performed upon samples at least 6 in. in length and of the full width of the plank. In each case the required load shall be applied for a period of 60 sec, and the contact pin of the penetrometer shall be applied to the specimen at points 1½ in. or more from the edge of the specimen.

———— o ————

Standard Specification for

Axle-Steel Deformed Bars for Concrete Reinforcement

AASHO Designation: M 53–68

ASTM Designation: A 617–68

SCOPE

1.1 This specification covers deformed axle-steel concrete reinforcement bars. A deformed bar is defined as a bar which is intended for use as reinforcement in reinforced concrete construction. The surface of the bar is provided with lugs or protrusions (hereinafter called "deformations") which inhibit longitudinal movement of the bar relative to the concrete which surrounds the bar in such construction and conforms to the provisions of this specification. The standard sizes and dimensions of deformed bars with number designations shall be those listed in Table 1.

1.2 Bars are of two minimum yield levels: namely, 40,000 psi and 60,000 psi, designated as Grade 40 and Grade 60, respectively.

1.3 The weldability of the steel is not part of this specification but may be subject to agreement between a particular supplier and user.

MANUFACTURE

2.1 The bars shall be rolled from carbon steel axles for cars and locomotive tenders in the following standard journal sizes. No other axles or material shall be used.

	Standard Journal Sizes
Carbon steel axles	4¼ by 8 in. 5 by 9 in. 5½ by 10 in. 6 by 11 in.

CARBON DETERMINATION

3.1 The manufacturer shall make a determination for the carbon content of each axle received by him for manufacture into reinforcement bars. Based on these carbon determinations, all steel axles shall be stocked for subsequent rolling in separated lots by carbon range. The ranges of carbon shall be determined by the manufacturer as those best suited to meet the mechanical requirements.

3.2 When requested by the purchaser, the manufacturer shall report the carbon for each lot of bars furnished.

REQUIREMENTS OF DEFORMATIONS

4.1 Deformations shall be spaced along the bar at substantially uniform distances. The deformations on opposite sides of the bar shall be similar in size and shape.

4.2 The deformations shall be placed with respect to the axis of the bar so that the included angle is not less than 45 deg. Where the line of deformations forms an included angle with the axis of the bar of from 45 to and including 70 deg., the deformations shall alternately reverse in direction on each side, or those on one side shall be reversed in direction from those on the opposite side. Where the line of deformation is over 70 deg., a reversal in direction is not required.

4.3 The average spacing or distance between deformations on each side of the bar shall not exceed seven tenths of the nominal diameter of the bar

4.4 The over-all length of deformations shall be such that the gap between the extreme ends of the deformations on opposite sides of the bar shall not exceed 12½ percent of the nominal perimeter of the bar. Where the extreme ends terminate in a longitudinal rib, the width of the longitudinal rib shall be considered the gap. Where more than two longitudinal ribs are involved, the total width of all longitudinal ribs shall not exceed 25 percent

TABLE 1
Deformed Bar Designation Numbers, Unit Weights, and Nominal Dimensions[a] and Deformation Requirements

Bar Designation No.[b]	Unit Weight lb/ft	Nominal Dimensions[a]			Deformation Requirements, in.		
		Diameter, in.	Cross Sectional Area, in.²	Perimeter, in	Maximum Average Spacing	Minimum Average Height	Maximum Gap (Chord of 12½ percent of Nominal Perimeter)
3	0.376	0.375	0.11	1.178	0.262	0.015	0.143
4	0.668	0.500	0.20	1.571	0.350	0.020	0.191
5	1.043	0.625	0.31	1.963	0.437	0.028	0.239
6	1.502	0.750	0.44	2.356	0.525	0.038	0.286
7	2.044	0.875	0.60	2.749	0.612	0.044	0.334
8	2.670	1.000	0.79	3.142	0.700	0.050	0.383
9	3.400	1.128	1.00	3.544	0.790	0.056	0.431
10	4.303	1.270	1.27	3.990	0.889	0.064	0.487
11	5.313	1.410	1.56	4.430	0.987	0.071	0.540

[a] The nominal dimensions of a deformed bar are equivalent to those of a plain round bar having the same weight per foot as the deformed bar.
[b] Bar numbers are based on the number of eighths of an inch included in the nominal diameter of the bars

of the nominal perimeter of the bar; furthermore, the summation of gaps shall not exceed 25 percent of the nominal perimeter of the bar. The nominal perimeter of the bar shall be 3.14 times the nominal diameter.

4.5 The spacing, height, and gap of deformations shall conform to the requirements prescribed in Table 1.

MEASUREMENTS OF DEFORMATIONS

5.1 The average spacing of deformations shall be determined by dividing a measured length of the bar specimen by the number of individual deformations and fractional parts of deformations on any one side of the bar specimens. A measured length of the bar specimen shall be considered the distance from a point on a deformation to a corresponding point on any other deformation on the same side of the bar Spacing measurements shall not be made over a bar area containing bar marking symbols involving letters or numbers.

5.2 The average height of deformations shall be determined from measurements made on not less than two typical deformations. Determinations shall be based on three measurements per deformation, one at the center of the over-all length and the other two at the quarter points of the over-all length.

5.3. To indicate adequately the conformity to the dimensional requirements, measurements shall be selected as follows on representative bars taken at random.

5.3.1 For bars No. 3 to 11, inclusive, one bar for each 10 tons of each lot (Note) or fraction thereof.

NOTE—A lot is defined as all the bars of one bar number and pattern of deformations contained in an individual shipping release or shipping order.

5.4 Insufficient height, insufficient circumferential coverage, or excessive spacing of deformations shall not constitute cause for rejection unless it has been clearly established by determinations on each lot that typical deformation height, gap, or spacing do not conform to the minimum requirements prescribed in 4. Requirements of Deformation. No rejection may be made on the basis of measurements if fewer than ten adjacent deformations on each side of the bar are measured.

TENSILE PROPERTIES

6.1 The material shall conform to the requirements as to the tensile properties prescribed in Table 2.

6.2 The yield point shall be determined by the drop of the beam or halt in the gage of the testing machine.

BENDING PROPERTIES

7.1 The bend test specimen shall stand being bent, at room temperature, around a pin without cracking on the outside of the bent portion. The requirements for degree of bending and sizes of pins prescribed in Table 3 shall be observed.

7.2 The bend test shall be made on specimens of sufficient length to ensure free bending and with apparatus which provides:

7.2.1 Continuous and uniform application of force throughout the duration of the bending opetration.

7.2.2 Unrestricted movement of the specimen at points of contact with the apparatus, and

7.2.3 Close wrapping of the specimen around the pin or mandrel during the bending operation.

7.3 Other methods of bend testing may be used, but failures due to such methods shall not constitute a basis for rejection.

TEST SPECIMENS

8.1 Tension test specimens from deformed bars shall be of the full section of bars as rolled. For tension tests the unit stress determinations shall be based on the nominal cross-sectional areas shown in Table 1.

NUMBER OF TESTS

9.1 One tension test and one bend test shall be made from each lot of 10 tons or fraction thereof of each size of bar rolled from each lot of axles assorted in groups as specified in 3. Carbon Determination.

9.2 If any test specimen develops flaws, it may be discarded and another specimen substituted.

9.3 If the percentage of elongation of any tension test specimen is less than that specified in 6. Tensile Properties, and any part of the fracture is outside the middle third of the gage length, as indicated by scribe scratches marked on the specimen before testing, a retest shall be allowed.

PERMISSIBLE VARIATIONS IN WEIGHTS

10.1 The permissible variations in weights shall not exceed the limits prescribed in Table 4.

FINISH

11.1 The bars shall be free from injurious defects and shall have a workmanlike finish.

MARKING

12.1 When loaded for mill shipment, all bars shall be properly separated and tagged

with the manufacturer's test identification number.

12.2 Each producer shall identify the symbols of his marking system.

12.3 All bars produced to this specification shall be identified by a distinguishing set of marks legibly rolled into the surface of one side of the bar to denote in the following order:

12.3.1 *Point of Origin*—Letter or symbol established as the producer's mill designation.

12.3.2 *Size Designation*—Arabic number coresponding to Bar Designation Number of Table 1.

12.3.3 *Type of Steel*—Letter A indicating that the bar was produced from axle steel.

12.3.4 *Minimum Yield Designation*—Either the number 60 or a single continuous longitudinal line through at least 5 spaces offset from the center of the bar side for the 60,000 psi grade.

(*Tables 2, 3 and 4 on* Page 36)

TABLE 2
Tensile Requirements

	Grade 40[a]	Grade 60
Tensile strength, min, psi	70 000	90 000
Yield strength, psi	40 000	60 000
Elongation in 8 in., min, per cent:		
Bar No.		
3	11	8
4, 5, 6	12	8
7	11	8
8	10	7
9	9	7
10	8	7
11	7	7

[a] Plain round bars are available under AASHO M227, for Carbon Steel Bars Subject to Mechanical Property Requirements.

TABLE 3
Bend Test Requirements

NOTE.—*d* = diameter of pin around which specimen is bent, and *t* = diameter of the specimen.

Bar Designation No.	Grade 40	Grade 60
Under 6	90 deg *d* = 3*t*	90 deg *d* = 4*t*
6, 7, 8	90 deg *d* = 4*t*	90 deg *d* = 5*t*
9, 10, 11	90 deg *d* = 5*t*	90 deg *d* = 6*t*

TABLE 4
Permissible Variations from Theoretical Weights

NOTE.—The theoretical weights for bars listed in Table 1 shall be used to establish conformance to this table.

Diameter of Bars, in.	Permissible Variations from Theoretical Weights[a]	
	Lot[b] Under, percent	Individual Bar, Under, percent
Deformed bars, all sizes	3.5	6

[a] Reinforcing bars are evaluated on the basis of nominal weights. In no case shall the overweight of any bar or lot of bars be cause for rejection.

[b] The term "lot" means all bars of the same nominal weight per linear foot contained in an individual shipping release or shipping order.

INSPECTION

13.1 The inspector representing the purchaser shall have free entry, at all times while work on the contract of the purchaser is being performed, to all parts of the manufacturer's works which concern the manufacture of the material ordered. The manufacturer shall afford the inspector, without charge, all reasonable facilities to satisfy him that the material is being furnished in accordance with these specifications. All tests and inspection shall be made at the place of manufacture prior to shipment, unless otherwise specified, and shall be so conducted as not to interfere unnecessarily with the operation of the works.

REJECTION

14.1 Material which shows injurious defects subsequent to its acceptance at the manufacturer's works will be rejected, and the manufacturer shall be notified.

———o———

Standard Specification for

Fabricated Steel Bar or Rod Mats for Concrete Reinforcement

AASHO DESIGNATION: M [illegible]–70

(ASTM DESIGNATION: A 184–65)

SCOPE

1.1 This specification covers materials in mat (or sheet) form fabricated from steel bars (which term shall hereinatter include steel rods) to be used for the reinforcement of concrete. Such mats shall consist of two layers of bars which are assembled at right angles to each other and clipped or welded at all or some of the intersections to form a rectangular grid.

BASIS OF PURCHASE

2.1 The purchaser shall specify:

2.1.1 Which of the three types of bar material listed in Section 3 shall be used in fabricating the mats,

2.1.2 In case new billet or axle steel is specified, which of the grades is required, that is Grade 40, 60 or 75, and

2.1.3 Whether clipped or welded mats are required.

BAR MATERIAL

3.1 Steel bars entering into the manufacture of mats shall conform, before fabrication, to one of the following specifications of the American Association of State Highway officials

3.1.1 Deformed conforming to the Specifications for Deformed Billet-Steel Bars for Concrete Reinforcement (AASHO M 31).

3.1.2 Deformed conforming to the Specifications for Rail-Steel Deformed Bars for Concrete Reinforcement (AASHO M 42).

3.1.3 Deformed conforming to the Specifications for Axle-Steel Deformed Bars for Concrete Reinforcement (AASHO M 53).

TEST REPORTS ON BAR MATERIAL

4.1 The manufacturer shall supply test reports showing that the bar stock used in the

fabrication of the mats as delivered has fulfilled the tension and bend test requirements of the specified type and grade as described in Section 3, which reports shall show the manufacturer's test identification numbers, including the identity of the stock.

CLIPS

5.1 Clips for clipped mats shall be formed mechanically prior to or during the fabrication and assembly of the mats. They may be of the form and type furnished by the fabricator provided they engage and attach both bars at any intersection in such manner that separation in normal handling is prevented and the assembly conforms to the requirements hereinafter specified for physical tests of attachment at intersections.

FABRICATION

6.1 Fabricated mats shall be composed of two layers of bars substantially perpendicular to each other. Bars in each layer shall be substantially parallel. Mats shall be fabricated in a manner that assures against appreciable dislodgement of the bars during handling, shipping, placing, and concreting.

ASSEMBLY

7.1 Mats shall be assembled by means of clipping or welding to provide attachment at all exterior intersections and at not less than alternate interior intersections.

WELDS

8.1. Welds at intersections shall be made in a workmanlike manner and shall be of such quality as not to break apart in normal handling prior to installation of the mats.

8.2 The number and distribution of sound welds shall be not less than that required in Section 7, provided, however, that when welds are made at each intersection, the separation of 10 per cent or less of all welds shall not be cause for rejection when no more than half of the permissible separations are located on any one member.

8.3 Welding shall be done in such a manner that the minimum requirements for tensile strength and yield strength of bar stock as described in Section 3 shall be met when a specimen is tested across a point of weld, provided, however, that in the event of special field or other tests after fabrication, failure to conform to the percentage of elongation specified for the steel bars used shall not be cause for rejection.

SIZE AND SPACING DIMENSIONS

9.1 The sizes, spacing, and arrangement of bars in mats shall conform to the design specified by the purchaser.

9.2 Bars shall extend beyond exterior intersections a distance of not less than 1 in.

9.3 The spacing of bars shall average that specified in the design, and the space between individual bars shall not vary more than 1 in. from that specified.

WIDTHS AND LENGTHS OF MATS

10.1 The over-all length or width of the mats shall not be more than 1 in. greater or less than the specified dimension. Unless otherwise specified, lengths of mats shall not exceed 16 ft. Widths of mats shall preferably not exceed 9 ft 8 in

STRENGTH OF CONNECTIONS

11.1 It shall be considered satisfactory compliance with these specifications if connections made by clipping shall be capable of withstanding a static load of 75 lb exerted in the direction of either bar, with not more than ½-in. slip; and, on either clipped or welded mats, a static load of 150 lb exerted perpendicular to the plane of the mat tending to separate the bars, with no apparent loosening when applied to one intersection of bars.

TESTS OF CONNECTIONS

12.1 Tests of the degree of attachment of bars by clipping or welding at the inter-

sections shall be made on the mats designated in Section 13 in accordance with 12.2, 12.3 and 12.4.

12.2 Not less than one exterior and one interior connection in each designated mat shall be tested in order to establish the adequacy of attachment and, at the option of the inspector, additional connections in the same mat may be tested.

12.3 Tests of connections against slipping may be performed on one intersection in an assembled mat by means of a spring balance.

12.4 Tests of connections against bar separation may be performed on an assembled mat by placing blocks under a bar in the upper layer and applying sufficient weight on the bar in the lower layer.

NUMBER OF TESTS AND MEASUREMENTS

13.1 Two mats of each type in any order shall be tested in accordance with Sections 11 and 12 and measured for over-all dimensions and bar spacings provided, however, that where there are more than 1000 mats of a single type in an order, one mat of such type shall be so tested and measured for each 500 mats, or fraction thereof, in the total order. Inspection as to general workmanship shall be visual.

RETESTS

14.1 In the case of retests after rejection, twice the number of samples specified in 12.1 and 13 shall be selected and tested. All such samples shall meet the requirements of this specification.

FINISH

15.1 The finished mats shall be free from injurious defects in material or workmanship and shall be suitably flat for use.

MARKING

16.1 One or more mats in each consignment shall be marked with tags showing the name of the manufacturer and other marking to identify it with the order.

INSPECTION

17.1 The inspector representing the purchaser shall have free entry, at all times while work on the contract o fthe purchaser is being performed, to all parts of the manufacturer's plant which concern the fabrication of the mats ordered. The manufacturer shall afford the inspector, without charge, all reasonable facilities to satisfy him that the mats are being furnished in accordance with this specification. All tests and inspection shall be made at the place of fabrication prior to shipment, unless otherwise specified, and shall be so conducted as not to interfere unnecessarily with fabricating operations.

REJECTION

18.1 Fabricated mats which do not meet the requirements of these specifications may be rejected. Unless otherwise specified, any rejection shall be reported within five days from the time of selection of test samples.

REHEARING

19.1 Rejected materials shall be preserved for a period of at least two weeks from the date of inspection, during which time the manufacturer may make claim for a rehearing and retesting.

RECONDITIONING

20.1 Fabricated mats which are finally rejected as not meeting the requirements of these specifiactions may be reassembled and subjected to reinspection provided that the qualities of the individual bars and of the fabricated mats are not injured through such process.

———— o ————

Standard Specification for

Welded Steel Wire Fabric for Concrete Reinforcement

AASHO DESIGNATION: M 55–70

(ASTM DESIGNATION: A 185–69)

SCOPE

1.1 This specification covers welded wire fabric to be used for the reinforcement of concrete.

DESCRIPTION

2.1 The term "welded wire fabric" as herein used designates a material composed of cold-drawn steel wires, "as drawn" or galvanized, fabricated into sheet (or so-called "mesh") formed by the process of electric welding. The finished material shall consist essentially of a series of longitudinal and transverse wires arranged substantially at right angles to each other and welded together at all points of intersection.

GRADE OF WIRE

3.1 Wire used in the manufacture of welded wire fabric shall conform to the Standard Specifications for Cold-Drawn Steel Wire for Concrete Reinforcement (AASHO M 32).

FABRICATION

4.1 The wires shall be assembled by automatic machines or by other suitable mechanical means which will assure accurate spacing and alignment of all members of the finished fabric.

4.2 Longitudinal and transverse members shall be securely connected at every intersection by a process of electrical-resistance welding which employs the principle of fusion combined with pressure.

4.3 Wire of proper grade and quality when fabricated in the manner herein required shall result in a strong, serviceable mesh-type product having substantially square or rectangular openings. It shall be fabricated and finished in a workmanlike manner, shall be free from injurious defects, and shall conform to these specifications.

MECHANICAL PROPERTIES

5.1 All wire of the finished fabric shall meet the minimum requirements for tensile properties and shall also withstand the bend test as prescribed for the wire before fabrication in the Standard Specifications for Cold-Drawn Steel Wire for Concrete Reinforcement (AASHO M 32).

5.2 In order to assure adequate weld shear strength between longitudinal and transverse wires, weld shear tests as described in Section 6.3 shall be made. The minimum average shear value of the weld in pounds for fabric having a wire size differential of up to and including six gages shall be not less than 35,000 multiplied by the area of the larger wire in square inches, provided the smaller wire is not smaller than No. 10 gage. Typical examples of a wire size differential of six gages are as follows.

Larger	Smaller
No. 0 gage	No. 6 gage
No. 2 gage	No. 8 gage

5.3 Fabric having a wire gage differential between larger and smaller wires of more than six gages shall not be subject to a weld shear requirement.

TENSION TESTS AND WELD SHEAR TESTS

6.1 Tests for determination of conformance to the requirements of 5.1 may be made on the mesh after fabrication either across or between the welds. Not less than 50 per cent of the samples tested shall be across a weld.

6.2 Reduction of area may be determined by measuring the ruptured section of a specimen which has been tested either across or between the welds. However, in the case of a specimen which has been tested across a weld, the measurement shall be made only when rupture has occurred at a sufficient distance from the center of the weld to permit an accurate measurement of the fractured section.

6.3 Weld shear tests for determination of conformance to the requirements of 5.2 shall be conducted using a fixture as described in Section 9.

6.3.1 Four welds selected at random from a specimen representing the entire width of the fabric shall be tested for weld shear strength. The lot shall be deemed to conform to the requirements for weld shear strength if the average of the four samples complies with the values stipulated in 5.2. If this average fails to meet the prescribed minimum value, all the welds across the specimen shall then be tested. The fabric will be acceptable if the average of all weld shear test values across the specimen meets the prescribed minimum value.

BEND TESTS

7.1 The bend tests shall be made on a specimen between the welds.

TEST SPECIMENS

8.1 Test specimens for testing tensile properties shall be obtained by cutting from the finished fabric units of suitable size to enable proper performance of the intended tests.

8.2 Specimens used for testing tensile properties across a weld shall have the welded joint located approximately at the center of the strand being tested, and the cross wire forming the welded joint shall extend approximately 1 in. beyond each side of the welded joint.

8.3 Test specimens for determining weld shear properties shall be obtained by cutting from the finished fabric a section, including one transverse wire, across the entire width of the sheet or roll. From this specimen four welds shall be selected at random for testing. The transverse wire of each test specimen shall extend approximately 1" on each side of the longitudinal wire. The longitudinal wire of each test specimen shall be of such length below the transverse wire so as to be adequately engaged by the grips of the testing machine and of such length above the transverse wire that its end shall be above the center line of the upper bearing of the testing device.

8.4 Tests for conformance to dimensional characteristics shall be made on full sheets or rolls.

8.5 If any test specimen shows defects or develops flaws it may be discarded and another substituted.

WELD SHEAR TEST APPARATUS AND METHODS

9.1 As the welds in welded fabric contribute to the bonding and anchorage value of the wires in concrete, it is imperative that the weld acceptance tests be made in a fixture which will stress the weld in a manner similar to which it is stressed in concrete. In order to accomplish this the longitudinal wire in the tester must be stressed in an axis close to its center line. Also the transverse wire must be held closely to the longitudinal wire, and in the same relative position, so as to prevent rotation of the transverse wire.

9.2 Figure 1, shows the complete details of a typical testing fixture together with two anvils which make it possible to test welds for wires up to $\frac{5}{8}$" in diameter. This tester can be used in most tensile testing machines and should be hung in a ball and socket arrangement at the center of the machine. This, or a similarly effective fixture designed on the same principle, is acceptable.

9.3 Test specimens should be inserted through the notch in the anvil using the smallest notch available in which the longitudinal wire will fit loosely. The longitudinal wire will be in contact with the surface of the free rotating ball bearing rollers while the transverse wire will be supported by the anvil on each side of the slot. The bottom jaws of the testing machine will grip the lower end of the longitudinal wire and the load applied at a rate of stressing not to exceed 100,000 psi per minute.

NUMBER OF TESTS

10.1 One test for conformance with the provisions of 5.1 shall be made for each

75,000 sq. ft. of fabric or fraction thereof.

10.2 One specimen for each 300,000 sq. ft. of fabric or fraction thereof as defined in 8.3 shall be tested for conformance to the requirements of 5.2.

GAGES, SPACINGS AND DIMENSIONS

11.1 Gages, spacings, arrangement of wires, and dimensions of units in flat sheet form or rolls shall conform to the requirements specified by the purchaser.

WIDTH OF FABRIC

12.1 The width of fabric shall be considered to be the center-to-center distance between outside longitudinal wires, unless otherwise specified.

12.2 Transverse wires shall not project beyond the centerline of each longitudinal edge wire more than a distance of 1 in., unless otherwise specified.

(Figure 1, Welded Wire Fabric Weld Tester, shown on page 42 and 43 *)*

PERMISSIBLE VARIATIONS IN WIRE DIAMETER

13.1 The permissible variation in diameter of any wire in the finished fabric shall conform to the tolerances prescribed for the wire before fabrication in the Standard Specifications for Cold-Drawn Steel Wire for Concrete Reinforcement (AASHO M 32).

SPACINGS

14.1 The average spacing of wires shall be such that the total number of wires contained in a sheet or roll is equal to or greater than that determined by the specific spacing, but the center-to-center distance between the individual members may vary not more than $\frac{1}{4}$ inch from the specified spacing. It is understood that sheets of fabric of the same specified length may not always contain an identical number of transverse wires and, therefore, may have various lengths of longitudinal overhang.

OVER-ALL DIMENSIONS

15.1 The over-all length of flat sheets, measured on any wire, may vary ±1 in. or 1 per cent, whichever is greater.

15.2 In case the width of flat sheets or rolls is specified as the over-all width (tip-to-tip length of cross wires), the width shall not be more than 1 in. greater or less than the specified width.

ROLLS OR SHEETS

16.1 Welded wire fabric shall be furnished either in flat sheets or in rolls as specified by the purchaser.

BUNDLING

17.1 When fabric is furnished in flat sheets, it shall be assembled in bundles of convenient size containing not more than 150 sheets and securely fastened together.

17.2 When fabric is furnished in rolls, each roll shall be secured so as to prevent unwinding during shipping and handling.

MARKING

18.1 Each bundle of flat sheets and each roll shall have attached thereto a suitable tag bearing the name of the manufacturer, description of the material, and such other information as may be specified by the purchaser.

INSPECTION

19.1 The inspector representing the purchaser shall have free entry at all times while work on the contract of the purchaser is being performed to all parts of the manufacturer's works which concern the manufacture of the material ordered. The manufacturer shall afford the inspector, without charge, all reasonable facilities to satisfy him that the

material is being furnished in accordance with this specification.

19.2 Except for yield strength, all tests and inspection shall be made at the place of manufacture prior to shipment, unless otherwise specified, and shall be so conducted as not to interfere unnecessarily with the operation of the works.

19.3 If the purchaser considers it desirable to determine compliance with the yield strength requirements of AASHO M 32, he may have yield strength tests made in a recognized laboratory, or his representative may make the test at the mill if such tests do not interfere unnecessarily with the mill operations.

REJECTION AND RETESTS

20.1 Material which does not meet the requirements of these specifications may be rejected. Unless otherwise specified, any rejection shall be reported to the manufacturer within five days from the time of selection of test specimens.

20.2 In case a specimen fails to meet the tension or bend test, the material shall not be rejected until two additional specimens, taken from other wires in the same sheet or roll, have been tested. The material shall be considered as meeting this specification in respect to any prescribed tensile property, provided the tested average for the three specimens, including the specimen originally tested, is at least equal to the required minimum for the particular property in question and provided further that none of the three specimens develops less than 80 per cent of the required minimum for the tensile property in question. The material shall be considered as meeting these specifications in respect to bend test requirements, provided both additional specimens satisfactorily pass the prescribed bend test.

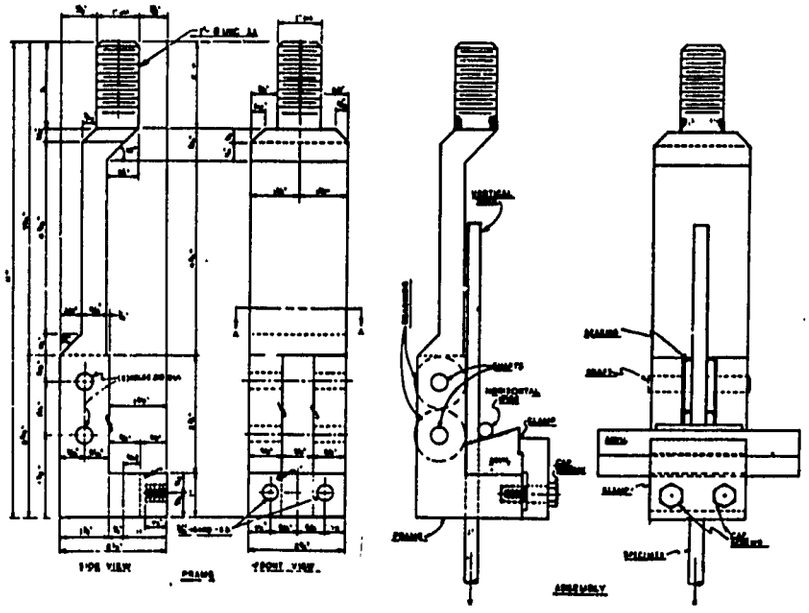

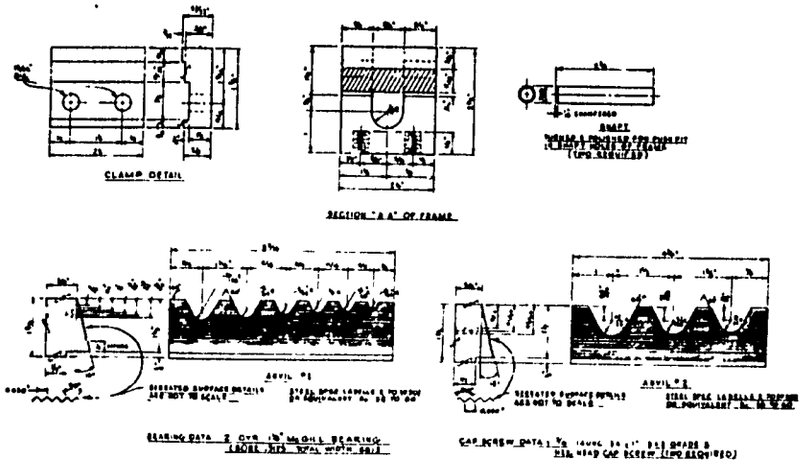

FIG. 1.—*Welded Wire Fabric Weld Tester.*

20.3 Any material which shows injurious defects subsequent to its acceptance at the manufacturer's works may be rejected and the manufacturer shall be promptly notified.

20.4 Welded joints shall withstand normal shipping and handling without becoming broken, but the presence of broken welds, regardless of cause, shall not constitute cause for rejection unless the number of broken welds per sheet exceeds 1 per cent of the total number of joints in the sheet, or if the material is furnished in rolls, 1 per cent of the total number of joints in 150 sq. ft. of fabric and, furthermore, provided not more than one-half the permissible maximum number of broken welds are located on any one wire.

20.5 In case rejection is justified, by reason of failure to meet the weld shear requirements, four additional specimens shall be taken from four different sheets or rolls and tested in accordance with Section 6.3. If the average of all the weld shear tests does not meet the requirement, the lot shall be rejected.

20.5.1 In case rejection is justified by reason of failure to meet the requirements for dimensions, the amount of material rejected shall be limited to those individual sheets or rolls which fail to meet these specifications. If, however, the total number of sheets or rolls thus rejected exceeds 25 per cent of the total number in the shipment, the entire shipment may be rejected.

REHEARING

21.1 Rejected materials shall be preserved for a period of at least two weeks from the date of inspection, during which time the manufacturer may make claim for a rehearing and retesting.

———— o ————

Standard Specification for

Crushed Stone, Crushed Slag and Crushed Gravel *for* Dense-Graded Bituminous Road and Plant-Mix Surface Course

AASHO DESIGNATION: M 62–64

SCOPE

1.1 This specification covers the quality and size of crushed stone, crushed slag and crushed gravel with sufficient filler for use in dense-graded bituminous road and plant-mix surface course.

GENERAL REQUIREMENTS

2.1 Aggregates shall be of uniform quality, crushed to size as necessary, and shall be composed of sound, tough, durable pebbles or fragments of rock or slag with or without sand or other inert finely divided mineral aggregate. All material shall be free from clay balls, vegetable matter, and other deleterious substances, and an excess of flat or elongated pieces. Slag shall be air-cooled blast-furnace slag of reasonably uniform density and quality. Excess of fine material shall be wasted before crushing.

NOTE—In addition to air-cooled blast-furnace slag, other slags having demonstrated a satisfactory service record may be used.

2.2 Aggregate for seal shall be free from dirt and other fine material.

PHYSICAL PROPERTIES

3.1 The aggregate shall conform to the following requirements:

3.1.1 Percentage of wear, Los Angeles test, not more than 50.

NOTE: A higher or lower percentage of wear may be required by the Engineer, depending upon the materials available for the work.

3.1.2 The aggregate shall be of such nature that when thoroughly coated with the bituminous material proposed for the work, the coating will not slough off upon contact with water.

3.1.3 The portion of the total aggregate passing the No. 40 sieve shall have a plasticity index of not more than 6.

3.1.4 At least ——— per cent of the gravel retained on the No. 4 sieve shall have at least one fractured face.

NOTE: The Engineer should insert appropriate requirements based on his experience with the test.

GRADING REQUIREMENTS

4.1 The total aggregate shall be well-graded between the limits shown and when tested by means of laboratory sieves shall conform to the grading requirements shown below:

	Aggregate for Mix Percent by wt.	Aggregate for Seal Percent by wt.
Passing 1-in. sieve	100	....
Passing ¾-in. sieve	85–100	....
Passing ½-in. sieve	....	100
Passing ⅜-in. sieve	....	85–100
Passing No. 4 sieve	45–65	10–30
Passing No. 8 sieve	....	0–10
Passing No. 10 sieve	30–50	....
Passing No. 16 sieve	....	0–5
Passing No. 200 sieve	5–10	(Note)

NOTE: When desired by the Engineer, a maximum of 3 percent passing the No. 200 sieve may be specified.

4.2 During any run, as determined by the Engineer, the aggregate shall not vary from the average beyond the following tolerances:

Material passing No. 4 sieve ± 5 per cent
Material passing No. 10 sieve ± 5 per cent
Material passing No. 200 sieve ± 2 per cent

METHODS OF TESTING

5.1 Testing of aggregates shall be in accordance with the following standard methods of the American Association of State Highway Officials:

Sieve analysis	
Material passing No. 200 sieve	T 27
Percentage of wear	T 11
Plasticity index	T 96
	T 90

———— o ————

Standard Specification for

Crushed Stone, Crushed Slag and Crushed Gravel *for* Open-Graded Bituminous Road-Mix Surface Course

AASHO DESIGNATION: M 63–64

SCOPE

1.1 This specification covers the quality and size of crushed stone, crushed slag and crushed gravel to be used in the construction of an open-graded bituminous surface course by road-mix methods.

GENERAL REQUIREMENTS

2.1 Aggregates shall be composed of clean, tough, durable fragments free from an excess of flat, elongated, soft or disintegrated pieces and free from fragments coated with dirt or other objectionable matter. Slag shall be air-cooled, blast-furnace slag reasonably uniform in density.

NOTE—In addition to air-cooled blast-furnace slag, other slags having demonstrated a satisfactory service record may be used.

PHYSICAL PROPERTIES

3.1 The aggregate shall conform to the following requirements.

3.1.1 Percentage of wear, Los Angeles test, not more than 40.

3.1.2 Weight per cubic foot, pounds (blast-furnace slag), not less than 70.

NOTE: This is considered the maximum safe percentage of wear and the minimum safe weight per cubic foot for this type of construction. A lower percentage of wear and a higher weight per cubic foot should be specified on all work where it is economically practicable to obtain materials conforming thereto.

3.1.3 At least 50 per cent of the gravel retained on the No. 4 sieve shall have at least one fractured face.

3.1.4 When the aggregate is subjected to five alternations of the sodium sulfate soundness test, the weighted loss shall not exceed 12 per cent by weight

NOTE: In certain specific cases where aggregates of this quality cannot economically be obtained, aggregates with a higher percentage of loss may be used if a satisfactory service record of at least 5 years duration under similar conditions of service and exposure shall have been demonstrated. In case it is desired to use magnesium sulfate, a weighted loss should be specified which experience has shown will give results corresponding to a loss of 12 per cent when sodium sulfate is used

GRADING

4.1 The coarse aggregate shall be either (1) No. 67, the ¾-in. to No. 4 size, (2) No. 56, the 1-in. to ⅜-in. size; (3) No. 5, the 1-in. to ½-in. size; or (4) No. 467, the 1½-in. to No. 4 size, as shown in Standard Specifications for Standard Sizes of Coarse Aggregate for Highway Construction (AASHO M 43), and shall be well-graded between the limits specified. When tested by means of laboratory sieves, the size designated shall conform to the following requirements.

	Per cent by wt.
(1) No. 67—3/8-in. to No. 4 size	
Passing 1-in. sieve	100
Passing 3/4-in. sieve	90–100
Passing 3/8-in. sieve	20–55
Passing No. 4 sieve	0–10
Passing No. 8 sieve	0–5
(2) No. 56—1-in. to 3/8-in. size	
Passing 1 1/2-in. sieve	100
Passing 1-in. sieve	90–100
Passing 3/4-in. sieve	40–75
Passing 1/2-in. sieve	15–35
Passing 3/8-in. sieve	0–15
Passing No. 4 sieve	0–5
(3) No. 5—1-in. to 1/5-in. size	
Passing 1 1/2-in. sieve	100
Passing 1-in. sieve	90–100
Passing 3/4-in. sieve	20–55
Passing 1/2-in. sieve	0–10
Passing 3/8-in. sieve	0–5
(4) No. 467—1 1/2-in. to No. 4 size	
Passing 2-in. sieve	100
Passing 1 1/2-in. sieve	95–100
Passing 3/4-in. sieve	35–70
Passing 3/8-in. sieve	10–30
Passing No. 4 sieve	0–5

4.2 Aggregate for choke and seal shall be No. 8, the 3/8-in. to No. 8 size as shown in AASHO M 43, which, when tested by means of laboratory sieves, will conform to the following requirements:

	Per cent by wt.
No. 8—3/8-in. to No. 8 size	
Passing 1/2-in. sieve	100
Passing 3/8-in. sieve	85–100
Passing No. 4 sieve	10–30
Passing No. 8 sieve	0–10
Passing No. 16 sieve	0–5

Standard Specification for

Clay Pipe

AASHO Designation: M 65–70

SCOPE

1.1 This specification covers five classes of clay pipe, as follows:

1.1.1 *Standard-Strength Clay Pipe* intended to be used for the conveyance of sewage, industrial wastes and storm water.

1.1.2 *Extra-Strength Clay Pipe* intended to be used for the construction of culverts or where high-strength pipe are desired.

1.1.3 *Standard-Strength Perforated Clay Pipe* intended to be used in underdrains.

1.1.4 *Extra-Strength Perforated Clay Pipe* intended to be used in underdrains.

1.1.5 *Cradle-Invert Clay Pipe* intended to be used in underdrains.

TYPE OF PIPE

2.1 Standard-strength clay pipe, extra-strength clay pipe and standard-strength and extra-strength perforated clay pipe shall be of full circular cross section with outside and inside circumferences concentric and shall be of the bell-and spigot type.

2.2 Cradle-invert clay pipe shall be of the bell-and-spigot type. In cross section the lower portion of the pipe shall be semi-circular, and the upper portion shall consist of short vertical extensions of the lower half connected by a slightly depressed, horizontal cradle invert, all portions of the cross section being integral. The cradle may be smooth or corrugated longitudinally and shall be of the same thickness as the barrel of the pipe. The bell end shall have three lugs, two of which shall be on opposite sides of the pipe near the horizontal transverse axis. The third lug shall extend through the lower quadrant (90°) of the pipe. These lugs shall be approximately 5/8 inch in thickness to produce openings of that

width between the bell and spigot ends of adjacent sections of pipe above the lower quadrant and to produce a continuous flow line in the lower quadrant.

MATERIALS AND MANUFACTURE

3.1 Clay pipe shall be manufactured from surface clay, fire clay, or shale, or a combination of these materials.

3.2 These materials or any combination thereof, when molded into pipe and subjected to suitable temperatures, shall yield a product that will be strong, durable, serviceable, free from objectionable defects, and shall conform to these specifications.

RESISTANCE TO ACTION OF ACIDS

4.1 Tests for resistance to action of acids shall be optional with the purchaser and shall be made only when specified by him in advance, in which case he shall specify if the test is to be made with hydrochloric, nitric, sulfuric or acetic acid. When specified, the test shall be made as described in the Standard Methods of Testing Culvert Pipe, Sewer Pipe and Drain Tile (AASHO T 33) and the percentage of acid-soluble matter shall not exceed 0.25 per cent.

PHYSICAL PROPERTIES

5.1 The strength of clay pipe shall conform to the requirements prescribed in Table 1.

5.2 The absorption of clay pipe shall not exceed 8 per cent.

TEST SPECIMENS

6.1 The specimens for purpose of tests shall be sound full-size pipe and shall be selected by the purchaser or his representative at the point or points designated by him when placing the order.

6.2 The manufacturer or seller shall furnish without charge, specimens for test, up to 0.5 per cent of the number of pipes in each size of pipe furnished, except that in no case shall less than two specimens be furnished.

METHODS OF SAMPLING AND TESTING

5.1 Sampling and testing of crushed stones, crushed slag and crushed gravel shall be in accordance with the following standard methods of the American Association of State Highway Officials:

Sampling	T 2
Percentage of wear	T 96
Weight per cubic foot	T 19
Sieve analysis	T 27
Soundness	T 104

—— o ——

MEASUREMENT AND OBSERVATION OF SPECIMENS

7.1 The specimens shall first be freed from all visible moisture. When dry, each specimen shall be measured and inspected. The results of these observations shall be recorded.

7.2 *Defective Specimens.*—Specimens that are observed to have fire cracks or other defects in form or dimensions, in excess of the limits permitted in these specifications, shall be discarded and replaced with additional specimens from the shipment.

TEST EQUIPMENT

8.1 Every manufacturer furnishing pipe under this specification shall furnish all facilities and personnel necessary to carry out the tests for strength and absorption described in AASHO T 33.

ACCEPTANCE OR REJECTION

9.1 Failure of more than 20 per cent of the specimens of a size to conform to the requirements of the strength tests or the absorption tests, or both, shall result in rejection

of all the pipe of that size in the shipment or delivery; except that in the event of 20 per cent of the specimens in any size failing to meet the requirements, the manufacturer or seller may, with the consent of the purchaser, furnish for test, without charge, additional specimens from the same shipment to be selected as specified in Section 6. In case more than 80 per cent of the specimens tested, including those first tested, shall show substantial conformance for each of the various tests performed, then the entire shipment or delivery for this size shall be accepted; otherwise it shall be rejected.

9.2 However, in the case of failure of pipe to conform to the strength requirements under the specified method, and the accuracy of the testing machine is questioned, a retest at the request of the manufacturer shall be made upon a machine whose accuracy is known, or the machine originally used shall be recalibrated before the retest is made.

9.3 In addition to the requirements in Paragraph 9.1 failure of 10 per cent or more of the individual specimens tested to develop 75 per cent of the average crushing strength requirements shall be cause for the rejection of the shipment, but the manufacturer or seller may cull the pipe and submit the balance of the shipment for retest, and if the shipment then conforms to all of the requirements of these specifications it shall be accepted.

SIZES AND DIMENSIONS

10.1.1 Standard-strength perforated clay pipe shall be furnished in diameters of 4 inches through 24 inches and with the dimensions, including permissible variations, prescribed in Tables 2 and 5.

TABLE 1
Strength Requirements of Clay Pipe by Three-Edge Bearing Method

Nominal Internal Diameter, inches	Standard-Strength Perforated Clay Pipe	Standard-Strength Clay Pipe	Extra-Strength Perforated Clay Pipe	Extra-Strength Clay Pipe	Cradle-Invert Clay Pipe
	Average Strength, Minimum, Pounds Per Linear Foot				
4	1000	1200	1250	2000	1000
6	1000	1200	1600	2000	1000
8	1000	1400	1600	2200	1200
10	1100	1600	1600	2400	1500
12	1200	1800	1800	2600	2000
15	1400	2000	2200	2900	....
18	1700	2200	2640	3300	....
21	2000	2400	3100	3850	....
24	2400	2600	3520	4400	....
27	....	2800	3760	4700	....
30	....	3300	4000	5000	....
33	....	3600	4400	5500	....
36	....	4000	4800	6000	....
39	....	....	5040	6300	....

10.1.2 Standard-strength clay pipe, in diameters of 4 inches to 36 inches, inclusive, shall be furnished with the dimensions, including permissible variations, prescribed in Table 2.

10.1.3 Extra-strength clay pipe shall be furnished in diameters of 4 inches through 39 inches with the dimensions, including permissible variations, prescribed in Table 3.

10.1.4 Extra-strength perforated clay pipe in diameters of 4 inches through 39 inches shall be furnished with the dimensions, including permissible variations, shown in Tables 3 and 5.

10.1.5 Cradle-invert clay pipe shall be furnished of the sizes and of the dimensions, including permissible variations, prescribed in Table 4.

10.2 When more than one length is permitted, the purchaser shall indicate, at the time of purchase, which lengths shall be furnished; unless so indicated, the manufacturer shall furnish such lengths as he may elect.

10.3 If the thickness of the barrel is increased beyond that given in Tables 2, 3 or 4 in order to meet the specified strength requirements, the minimum and maximum diameter at inside of socket shall be increased by double the increase in thickness of barrel.

PERFORATIONS IN STANDARD AND EXTRA-STRENGTH PERFORATED CLAY PIPE

11.1 The perforations in standard or extra-strength perforated clay pipe shall be approximately circular and cleanly cut; shall have nominal diameters of not less than 3/10 inch nor greater than ¾ inch, and shall be arranged in rows parallel to the axis of the pipe. The perforations shall be approximately 3 inches center to center along the rows. The spigot end of bell and spigot pipe may be unperforated for a length equal to the depth of the socket. The rows of perforations shall be arranged in two equal groups placed symmetrically on either side of a lower unperforated segment, corresponding to the flow line of the pipe. The spacing of the rows shall be uniform. The distance between the centerlines of rows shall not be less than 1 inch

11.1.1 The minimum number of longitudinal rows of perforations, the maximum heights of the centerlines of the uppermost rows above the bottom of the inverts and the inside surface chord lengths of the unperforated segments illustrated in Figure 3 shall be as specified in Table 5. (See page 61.)

STRAIGHTNESS

12.1 Pipe intended to be straight shall have a maximum ordinate as measured from the concave side of the pipe not to exceed ¼ in. per foot of length.

GLAZING

13.1 Pipe may be glazed or unglazed as specified by the purchaser. Glazed pipe shall be coated with a bright or semi-bright glaze except that the inner surface of the socket and the outer surface of the spigot, for a distance equal to the specified depth of the socket, need not be glazed. Not more than 10 percent of the surface of the barrel, exclusive of the socket, of any glazed surface shall be free of glaze. Ceramic glaze need be applied to the inside of the barrel only.

BLISTERS

14.1 No blisters shall exceed 3 in. in diameter and no blisters or pimples shall project more than ⅛ in. above the surrounding surface of the pipe for sizes up to and including 18 in. in internal diameter. For sizes over 18 in. in internal diameter no blisters shall exceed in diameter more than 2 in. per foot of the internal diameter of the pipe, nor project above the surrounding surface of the pipe more than ⅛ in. per foot of the internal diameter of the pipe.

FINISH OF ENDS

15.1 The ends of the pipe shall be square with their longitudinal axes, except as provided in Tables 2, 3 and 4.

M 65

TABLE 2

Dimensions of Standard-Strength Clay Pipe and Standard-Strength Perforated Clay Pipe*

Nominal Internal Diameter (D), Inches[b]	Laying Length: Minimum (L), Feet	Laying Length: Limit of Minus Variation[a] Inches Per Foot of Length	Maximum Difference in Length of Two Opposite Sides, Inches	Inside Diameter of Barrel (D), Inches: Minimum	Inside Diameter of Barrel (D), Inches: Maximum	Inside Diameter of Socket at 3/2 Inch Above Base (D_s), Inches: Minimum	Depth of Socket (L_s), Inches: Nominal	Depth of Socket (L_s), Inches: Minimum	Thickness of Barrel (T) Inches: Nominal	Thickness of Barrel (T) Inches: Minimum	Thickness of Socket at 3/2 Inch from Outer end (T_s) Inches: Nominal	Thickness of Socket at 3/2 Inch from Outer end (T_s) Inches: Minimum
4	2	1/4	[illegible]	3 13/16	4 3/16	5 3/4	1 3/4	1 1/2	1/2	7/16	7/16	3/8
6	2	1/4	[illegible]	5 13/16	6 3/16	8 3/16	2 1/4	2	5/8	9/16	9/16	7/16
8	2	1/4	[illegible]	7 3/4	8 1/4	10 1/2	2 1/2	2 1/4	3/4	11/16	5/16	3/8
10	2	1/4	[illegible]	9 3/4	10 1/4	12 3/4	2 3/4	2 1/4	7/8	13/16	5/8	9/16
12	2	1/4	[illegible]	11 11/16	12 5/16	15 1/16	2 3/4	2 1/2	1	15/16	5/8	11/16
15	3	1/4	[illegible]	14 11/16	15 5/16	18 3/4	2 7/8	2 3/4	1 1/8	1 1/8	11/16	3/4
18	3	1/4	[illegible]	17 3/8	18 3/8	22 1/4	3	2 3/4	1 1/2	1 3/8	1 1/16	1 1/16
21	3	1/4	[illegible]	20 1/2	21 1/2	25 1/4	3 1/4	3	1 3/4	1 5/8	1 1/16	1 5/16
24	3	3/8	[illegible]	23 1/2	24 1/2	29 1/8	3 1/2	3 1/8	2	1 7/8	1 1/2	1 3/8
27	3	3/8	3/8	26 [illegible]	27 5/8	33	3 1/2	3 1/4	2 1/4	2 1/8	1 11/16	1 5/16
30	3	3/8	3/8	29 [illegible]	30 5/8	36 1/4	3 5/8	3 1/8	2 1/2	2 3/8	1 7/8	1 5/8
33	3	3/8	3/8	32 1/4	33 3/4	39 7/8	3 3/4	3 1/2	2 5/8	2 1/2	2	1 13/16
36	3	[illegible]	11/16	35 1/4	36 3/4	43 1/4	4	3 3/4	2 3/4	2 5/8	2 1/16	1 7/8

* Application of dimensions given in this table is shown in Figure 1.
[a] There is no limit for plus variation.
[b] Standard-strength perforated clay pipe in diameters of 4 to 24 inches, inclusive.

M 65

TABLE 3

Dimensions of Extra-Strength Clay Pipe and Extra-Strength Perforated Clay Pipe*

Nominal Internal Diameter (D), Inches	Laying Length: Minimum (L), Feet	Laying Length: Limit of Minus Variation[a] Inches Per Foot of Length	Maximum Difference in Length of Two Opposite Sides, Inches	Inside Diameter of Barrel (D), Inches: Minimum	Inside Diameter of Barrel (D), Inches: Maximum	Inside Diameter of Socket at 3/2 Inch Above Base (D_s), Inches: Minimum	Depth of Socket (L_s), Inches: Minimum	Thickness of Barrel (T), Inches: Minimum	Thickness of Socket at 3/2 Inch from Outer end (T_s) Inches: Minimum
4	2	1/4	3/16	3 13/16	4 3/16	6 1/4	2	9/16	7/16
6	2	1/4	[illegible]	5 13/16	6 3/16	8 5/16	2	9/16	7/16
8	2	1/4	[illegible]	7 3/4	8 1/4	10 7/8	2 1/4	3/4	1/2
10	2	1/4	[illegible]	9 3/4	10 1/4	13 1/4	2 3/8	7/8	9/16
12	2	1/4	[illegible]	11 [illegible]	12 5/16	15 11/16	2 1/2	11/16	11/16
15	3	1/4	1/2	14 11/16	15 5/16	19 1/2	2 3/8	1 1/4	3/8
18	3	1/4	1/2	17 5/8	18 3/8	23 5/16	2 3/4	1 3/8	11/16
21	3	3/8	9/16	20 1/2	21 1/2	27 1/16	3	2 5/16	13/16
24	3	3/8	9/16	23 1/2	24 1/2	30 13/16	3 1/4	2 1/2	1 3/8
27	3	3/8	3/4	26 3/8	27 5/8	34 3/8	3 3/8	2 3/4	1 5/8
30	3	3/8	3/4	29 3/8	30 5/8	37 7/8	3 7/8	2 3/4	2
33	3	3/8	3/4	32 1/4	33 3/4	41 7/8	4	3 1/4	2 3/4
36	3	3/8	11/16	35 1/4	36 3/4	45	4	3 1/4	2 1/2
39	3	5/8	11/16	38 1/4	39 3/4	48 1/8	4 1/4	3 3/4	2 3/4

* Application of dimensions given in this table is shown in Figure 1.
[a] There is no limit for plus variation.

M 65

TABLE 4

Dimensions of Cradle Invert Clay Pipe*

Nominal Internal Diameter (D), Inches	Laying Length		Maximum Difference in Length of Two Opposite Sides, Inches	Inside Diameter of Barrel (D), Inches		Inside Diameter of Socket at ½ Inch Above Base Inches		Depth of Socket (L₁), Inches		Thickness of Barrel and Cradle Invert (T), Inches		Thickness of Socket at ½ Inch from Outer End, Inches		Vertical Inside Diameter of Barrel (A), Inches		Vertical Outside Height of Barrel (B) Inches	
	Nominal (L), Feet	Limit of Minus Variation[1] Inches Per Foot of Length		Minimum	Maximum	Minimum	Maximum	Nominal	Minimum	Nominal	Minimum	Nominal	Minimum	Nominal	Minimum	Nominal	Minimum
6	2	¼	3/16	5 11/16	6 3/16	8 3/16	8 5/16	1 7/8	1 3/8	5/8	9/16	½	7/16	4	3 7/16	5 5/16	5 5/16
8	2	¼	7/16	7 3/4	8 3/8	10½	11	2	1 3/4	5/8	11/16	9/16	½	5½	5 5/8	7½	7 5/8
10	2, 3	¼	7/16	9 3/4	10 1/8	12 3/4	13¼	2 1/8	1 7/8	3/8	15/16	5/8	9/16	6 7/8	6 3/8	9 1/8	9
12	2, 3	⅜	7/16	11 3/4	12 1/16	15 1/8	15 3/8	2 1/8	2	1	15/16	5/8	11/16	8½	8 1/16	11	10 3/16

* Application of dimensions given in this table is shown in Figure 2.
[1] There is no limit for plus variation.

TABLE 5

Maximum Heights "H" of the Centerline of the Uppermost Rows Above the Bottom of the Invert and Minimum Lengths of Inner Surface "L" of Unperforated Segments

Diam. of Pipe, Inches	Min. Rows of Perforations	H Inches	L Inches
4	2	1 13/16	2 1/16
6	4	2 3/4	3 7/8
8	4	3 11/16	5 1/8
10	4	4 9/16	6 1/16
12	6	5½	7 11/16
15	6	6 7/8	9 3/8
18	6	8¼	11 9/16
21	6	9 5/8	13½
24	8	11	15 7/16
27	8	12 1/16	17 5/16
30	8	13 11/16	19¼
33	8	15 1/16	21 5/16
36	8	16 7/16	23¼
39	8	17 15/16	25 1/16

15.2 The inner surface of the socket and the outer surface of the spigot end of the pipe shall be scored by triangular-shaped or semi-circular-shaped rings about ⅛ in. in depth. The minimum number of scorings shall be as follows:

Size of Pipe, in	Number of Scorings, min.
4 and 6	1
8 and 10	2
12 to 36	3

FITTINGS

16.1 Fittings shall have a plain spigot end and a socket end corresponding in all respects with the dimensions specified for pipes of the corresponding sections of the corresponding size of straight pipe and fittings.

MARKING

17.1 Each length of pipe shall bear the initials or name of the person, company, or corporation by whom manufactured, and the location of the plant. Each length of pipe shall likewise be marked with the nominal pipe diameter followed by the letters SS or ES to designate whether it is Standard or Extra Strength pipe. The markings shall be indented on the exterior of the pipe near the socket and shall be plainly legible for purpose of identification.

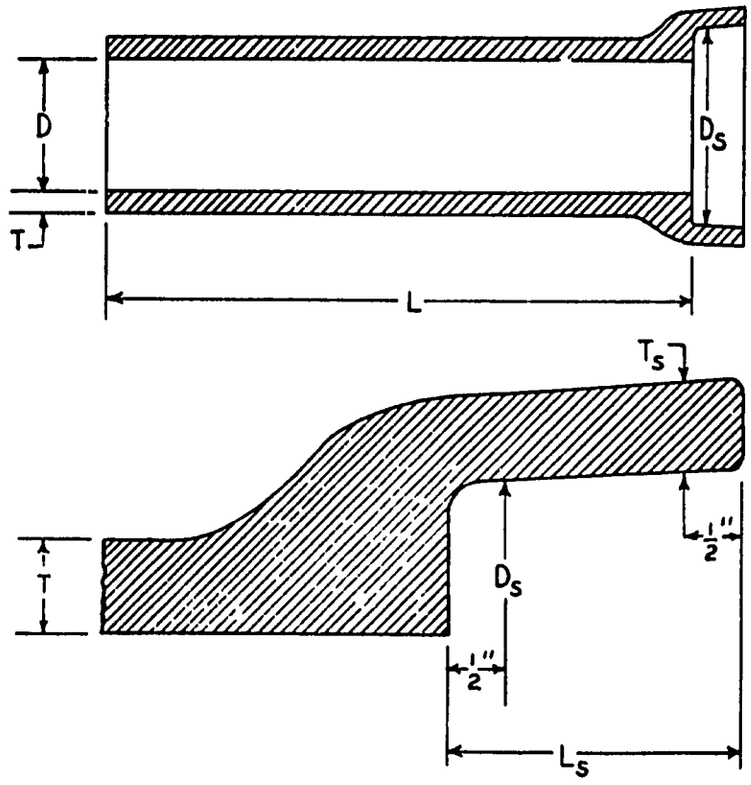

FIG 1 — *Application of Dimensions Given in Tables 2 and 3.*

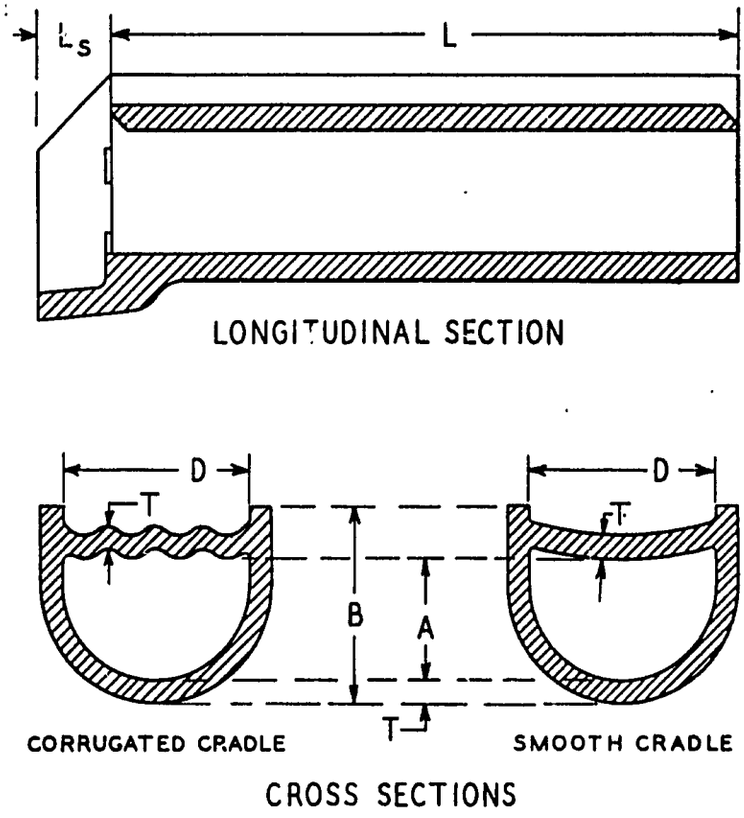

FIG. 2.—*Application of Dimensions Given in Table 4 for Cradle—Invert Pipe.*

INSPECTION

18.1 All pipe shall be subject to inspection at the factory, trench, or other point of delivery by a competent inspector employed by the purchaser. The purposes of the inspection shall be to cull and reject pipe that, independent of the physical tests herein specified, fail to conform to the requirements of these specifications

REJECTION

19.1 Pipe shall be subject to rejection on account of any of the following

19.1.1 Variations in any dimensions exceeding the permissible variations given in Tables 2, 3 and 4.

19.1.2 Fractures or cracks passing through the barrel or socket, except that a single crack at the spigot end of the pipe not exceeding 75 per cent of the depth of the socket, or a single fracture in the socket not exceeding 3 in. around the circumference nor 2 in. lengthwise may be permitted.

19.1.3 Chips or fractures on the interior of the pipe exceeding 2 in. in length, 1 in. in width, and of a depth more than one-fourth of the thickness of the shell

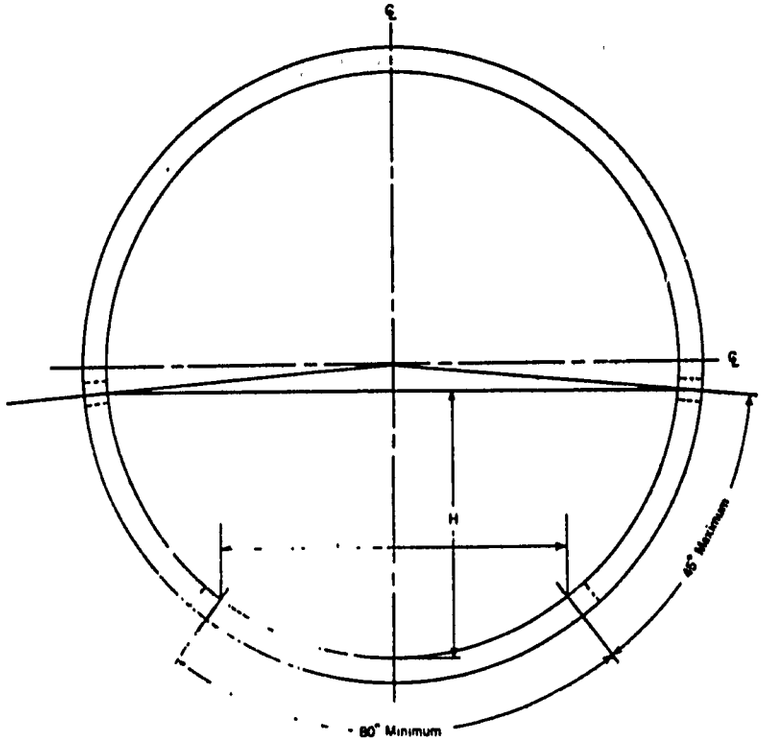

Fig. 3.—Requirements for Perforations.

19.1.4 Blisters that are broken or exceed the dimensions specified in Section 14.

19.1.5 Variation of more than 1/8 in. per linear foot in alignment of a pipe intended to be straight.

19.1.6 Glaze that does not conform to the requirements specified in Section 13.

19.1.7 Insecure attachment of spurs on branches.

19.1.8 In the case of standard-strength perforated clay pipe, perforations having diameters greater than 3/16 in. or less than 3/16 in.

MARKING OF REJECTED SPECIMENS

20.1 All pipe accepted may be plainly marked by the inspector. Rejected pipe shall not be marked or defaced so as to impair their value, but shall be replaced by the manufacturer or seller with pipe that meet the requirements of these specifications, without additional cost to the purchaser.

METHOD OF TESTING

21.1 Tests of clay pipe shall be made in accordance with the following standard methods of the American Association of State Highway Officials:

[illegible] pipe and drain tile. . . . . T 33

Standard Specification for

Foliage Green Bridge Paint

AASHO Designation: M 67–70

SCOPE

1.1 This specification covers two types of foliage green paint intended for use as
1.1 This specification covers two types of foliage green paint intended for use as
finish coat on steel bridges. Type II is intended for use in regions of low rainfall where the uninhibited chalking of basic carbonate white lead pigment might be considered

GENERAL REQUIREMENTS

2.1 The paint shall be well-ground, shall not settle in the container and shall be readily broken up with a paddle to a smooth uniform paint of good brushing consistency. The paint when brushed on a smooth vertical metal surface shall dry hard and elastic to a full oil gloss within the specified period without running, streaking, or sagging.

MATERIALS

3.1 The materials used in manufacture shall conform to the requirements of the following specifications.

3.1.1 Basic Carbonate White Lead.—ASTM D 81.

3.1.2 Zinc Oxide.—ASTM D 79.

3.1.3 Chrome Oxide Green.—ASTM D 263.

3.1.4 Raw Linseed Oil.—ASTM D 234.

3.1.5 Pale Heat Bodied Linseed Oil.—Federal TT-O-367, Type II.

3.1.6 Drier.—ASTM D 600, Class B, with proper metals to give proper drying characteristic of paint.

3.1.7 Mineral Spirits.—ASTM D 235.

3.1.8 Alkyd Resin Varnish.—Federal TT-R-266, Type II.

PIGMENT

4.1 The pigment shall be as specified in Table 1.

VEHICLE

5.1 The vehicle shall be as specified in Table 2. It shall be free from rosin and rosin derivatives.

PAINT COMPOSITION

6.1 The paint shall meet the requirements specified in Table 3.

M 67

TABLE 1

Pigment Composition

Pigment	Percent by Weight			
	Type I		Type II	
	Min.	Max	Min.	Max.
White lead	84 0	86.0 (1)	69.0	71.0 (2)
Zinc Oxide			14 5	15.5
Chrome oxide green	14 0	16 0	14 5	15.5

(1) The white lead shall be basic carbonate white lead.

(2) The white lead and zinc oxide may consist of any mixture of basic carbonate white lead, basic sulfate white lead, leaded zinc oxide and lead-free zinc oxide that meets the composition requirements for type II pigment.

M 67

TABLE 2
Vehicle Composition

Ingredients	Percent by Weight			
	Type I		Type II	
	Min.	Max.	Min.	Max.
Raw linseed oil	55.0		90.0	
Heat-treated linseed oil		13.0		
Varnish gums	6.5	7.0		
Volatile thinner and drier		25.5		10.0

TABLE 3
Paint Composition

Characteristic	Percent by Weight			
	Type I		Type II	
	Min.	Max.	Min.	Max.
Pigment, percent by weight	68.0		68.0	
Vehicle, percent by weight		32.0		32.0
Moisture, percent by weight		0.5		0.5
Coarse particles, skins and other foreign matter (residue retained on a No. 325 sieve, based on pigment), percent by weight		1.0		1.0
Weight, per gallons, pounds	17.7		18.3	
Viscosity, K. U.	72	85	72	85

DRYING TIME

7.1 The paint shall dry hard and tough in not more than 24 hours.

COLOR

8.1 The color of the paint shall be foliage green and shall match the color mutually agreed upon by purchaser and seller.

PACKING AND MARKING

9.1 Paint shall be delivered in such containers as may be specified in the contract. Each container shall bear a label with the following information shown thereon: name and address of the manufacturer and contractor, shipping point, trade mark or trade name, kind of paint, formula, number of gallons, date of manufacture and lot number.

METHODS OF ANALYSIS

10.1 The paint shall be analyzed in accordance with the appropriate methods of Federal Test Method Standard Number 141.

———o———

Standard Specification for

Black Paint for Bridges or Timber Structures

AASHO DESIGNATION: M 68–70

SCOPE

1.1 This specification covers black paint intended for use on steel bridges or timber structures. Unless otherwise stated, it shall be supplied in a ready-mixed condition suitable for use, but if so authorized by the Engineer, it may be furnished as semipaste paint. As specified herein the paint is intended for use on steel or previously painted wooden surfaces, but it may be modified as described (see Section 8) for use as the first or prime coat on timber structures.

GENERAL REQUIREMENTS

2.1 The paint shall be well-ground, shall not settle or cake badly in the container and shall be readily broken up with a paddle to a smooth uniform paint of good brushing consistency. The paint when brushed on a smooth vertical metal surface shall dry hard and elastic to a full oil gloss within the specified period without running, streaking or sagging.

MATERIALS

3.1 The materials used in manufacture shall conform to the requirements of the following specifications:

3.1.1 Red Lead (97% Pb_3O_4).—ASTM D 83.
3.1.2 Iron Oxide.—ASTM D 84, Class III, Type A.
3.1.3 Carbon black.—ASTM D 561.
3.1.4 Raw linseed Oil.—ASTM D 234.
3.1.5 Turpentine.—ASTM D 13.
3.1.6 Mineral spirits.—ASTM D 235.
3.1.7 Drier.—ASTM D 600, Class B, with proper metals to give proper drying characteristics of paint.

3.2 Any materials used in manufacture not specifically covered above shall meet the approval of the purchaser.

PIGMENT

4.1 The pigment shall consist of carbon black, red lead, acid insoluble mineral material and, if desired by the purchaser, iron oxide. The pigment shall show on analysis not less than 20% carbon and 5% lead oxide calculated as Pb_3O_4. Since some oxide of lead may be dissolved by the oil in the paint in all cases when the amount of lead in the pigment, calculated as Pb_3O_4, is found to be less than 5% of the pigment, lead shall be determined in the vehicle and the total lead (as Pb_3O_4) in the paint computed to percentage of pigment. The total of the lead oxide, insoluble mineral material and loss on ignition not be less than 90%.

VEHICLE

5.1 The vehicle in the ready-mixed paint shall contain not less than 80% of raw linseed oil and the balance to be combined thinner and drier. The thinner shall be turpentine, volatile mineral spirits or any mixture thereof. The vehicle in semipaste paint shall be entirely linseed oil.

PAINT COMPOSITION

6.1 The paint shall meet the requirements specified in Table 1.

DRYING TIME

7.1 The paint shall dry hard and tough in not more than 24 hours.

TABLE 1
Paint Composition

Characteristic	Min.	Max.
Pigment, percent by weight	28.0	32.0
Vehicle, percent by weight	68.0	72.0
Moisture, percent by weight	....	0.5
Coarse particles, skins and other foreign matter, (Residue retained on a No. 325 sieve based on pigment), percent by weight	....	1.5
Weight per gallon, pounds	9.0	....
Fineness of grind	3	....
Viscosity, K. U.	65	80

PAINT FOR PRIME COAT

8.1 The paint may be modified for use as the first or prime coat on unpainted timber. When so used, turpentine and linseed oil shall be added as required by the character of the surface in an amount not to exceed one pint each per gallon of the paint as specified.

PACKING AND MARKING

9.1 Paint shall be delivered in such containers as may be specified in the contract. Each container shall bear a label with the following information shown thereon: name and address of the manufacturer and contractor, shipping point, trade mark or trade name, kind of paint, formula, number of gallons, date of manufacture and lot number.

METHODS OF ANALYSIS

10.1 The paint shall be analyzed in accordance with the appropriate methods of Federal Test Method Standard Number 141.

———o———

Standard Specification for

Aluminum Paint

AASHO DESIGNATION: M 69–70

SCOPE

1.1 This specification covers two types of aluminum paint primarily intended for use on steel structures. The purchaser shall designate the type desired.

CLASSIFICATION

2.1 Type I paint is a two component system consisting of aluminum paste and aluminum mixing varnish that are combined as specified into a paint just prior to use.

2.2 Type II paint is a ready-mixed aluminum paint.

ALUMINUM PIGMENT PASTE FOR TYPE I PAINT (See Note 1)

NOTE 1.—The technical requirements for aluminum pigment paste are the same as ASTM D 962, Type 2 (leafing), Class B (Medium).

3.1 *General Requirements.*—The aluminum pigment paste shall consist of commercially pure aluminum in the form of fine, polished flakes, and a suitable fatty lubricant combined with a volatile thinner. It shall contain no fillers or adulterants such as mica.

3.2 *Detailed Requirements.*

3.2.1 The aluminum pigment paste shall conform to the requirements given in Table 1.

3.2.2 *Leafing.*—Leafing shall be not less than 50 percent.

3.2.3 *Condition in container.*—The aluminum pigment paste, as received, shall be in a homogeneous condition, and shall be substantially free from separation of pigment from liquid, and shall show no hardening or caking in the container.

3.2.4 *Stability.*—The aluminum pigment paste after heating at 45 C. for 24 hours in the presence of moisture, shall pass the stability test given in Federal Specification TT-A-468. Paste which within six months storage in unopened original packages after shipment is found to be unfit for use will be rejected.

M 69

TABLE 1

	Percent by weight of Paste	
	Minimum	Maximum
Non-volatile matter at 105 to 110 C (221 to 230 F.)	65	
Easily extracted fatty and oil matter (polishing lubricant)		3 0
Total impurities other than fatty and oily matter		0.7
Coarse particles retained on a No 325 sieve		1 0

ALUMINUM MIXING VARNISH FOR TYPE I PAINT

4.1 *General Requirements.*—The aluminum mixing varnish shall be on oleo-resinous water-resisting spar varnish meeting the requirements hereinafter specified. The oils used in formulating the varnish shall be composed of not less than 75 percent by weight of tung oil and the varnish shall contain no lime-hardened rosin. The tung oil shall comply with the requirements of ASTM Specification D 12.

4.2 *Detailed Requirements.*—The aluminum mixing varnish shall conform to the following requirements·

4.2.1 *Appearance.*—Clear and Transparent.

4.2.2 *Color*—Not darker than a solution of 3 g. of reagent grade potassium dichromate in CC^3 of pure sulphuric acid, specific gravity 1 84.

4.2.3 *Nonvolatile matter*—Not less than 50 0 percent by weight.

4.2.4 *Set to touch*—In not less than 2 hours and not more than 6 hours.

4.2.5 *Dry hard and tough.*—In not more than 24 hours.

4.2.6 *Viscosity at 25 C. (77 F)*—Not less than 0.65 nor more than 1 25 poises (Gardner-Holdt Tubes B to E)

4.2.7 *Toughness.*—Shall pass a 120 percent Kauri reduction test at 25 C (77 F).

4.2.8 *Skinning.*—Shall show no skinning after 48 hours in a tightly closed half filled container.

4.2.9 *Flash point (closed cup).*—Not lower than 30 C (86 F).

4.2.10 *Cold water resistance.*—The varnish shall be applied to a standard tinned panel and allowed to dry for 48 hours. The dried films, after exposure to cold water for 18 hours, shall shown no whitening, dulling, or other visible defects after drying at room temperature for 2 hours.

4.2.11 *Boiling water resistance*—The varnish shall be applied to a standard tinned panel and allowed to dry for 48 hours. The dried film, after exposure to boiling water for 15 minutes, shall show no whitening, dulling, or other visible defects after drying at room temperature for 2 hours

4.2.12 *Working properties.*—When mixed with aluminum pigment paste meeting the requirements of paragraph 2 in the ratio of 2 pounds of paste to 1 gallon of varnish, the resulting paint shall show satisfactory spreading qualities and shall give a free flowing, smooth, continuous coating free from breaks or sags and when applied to a smooth vertical steel surface shall have satisfactory leafing properties

4.2.13 *Calcium*—Calcium as calcium oxide (CaO) shall not exceed 0.1 percent by weight of solids.

TYPE I ALUMINUM PAINT

5.1 The aluminum paint shall be prepared just prior to application (Note 2) by thoroughly mixing the aluminum pigment paste with the mixing varnish in the proportion of 2 pounds of paste having a minimum non-volatile content of 65 percent (or its equivalent in the case of paste having a higher non-violatile content to 1 gallon of varnish (Note 3).

NOTE 2—It is recommended that no more paint be mixed than can be used during the working day so that the paint used each day will be freshly mixed

NOTE 3—When two coats of aluminum paint are to be used it is recommended that the undercoat be tinted with prussian blue or chrome green paste to properly differentiate the color of the dry undercoat from the wet second coat From 4 to 6 ounces of tinting paste per gallon of paint will usually suffice for this purpose. Prussian blue or chrome green shall comform to the requirements of ASTM D212 or D261.

5.2 The mixed paint shall set to touch in not less than 2 nor more than 8 hours, and shall dry hard and tough in not more than 24 hours.

REQUIREMENTS FOR TYPE II READY-MIXED PAINT (Note 4)

NOTE 4.—The technical requirements for Type II paint are the same as those for Federal Specification TT-P-0038c.

6.1 *Material.*—The paint as received shall consist of pigment and vehicle as specified, so combined as to produce a paint meeting all of the requirements specified herein. Suitable gassing inhibitor may be used to improve package stability.

6.2 *Composition.*

6.2.1 *Pigment.*—The pigment shall be commercially pure aluminum in the form of fine polished flakes suitable for making paint and shall conform to the requirements of ASTM D 962, Type I or Type II, Class B. It may be added to the vehicle in either powder or paste form.

6.2.2 *Vehicle.*—The vehicle shall be aphenolic resin varnish of 33-gallon oil length. The resin shall conform to Federal Specification TT-R-271. The oil portion of the vehicle shall consist of tung oil conforming to ASTM D 12 and alkali-refined linseed oil conforming to Military Specification MIL-L-15180 and shall contain a minimum of 80 percent tung oil. The vehicle shall not contain rosin or rosin derivatives.

6.3 *Qualitative requirements.*

6.3.1 Type II paint shall meet all the qualitative requirements of Federal Specification TT-P-0038c.

6.4 *Quantitative requirements for Type II.*

6.4.1 The quantitative requirement of the ready-mixed paint shall be as specified in Table 2.

PACKING AND MARKING

7.1 Type I paint shall be delivered in substantial two compartment containers or in such containers as may be specified in the contract. The proper quantity of paste and varnish vehicle shall be packaged in the proportion of 2 pounds of paste per gallon of vehicle and which, when mixed together, will result in one (1) or five (5) gallons or such other quantities of mixed paint as may be specified.

7.2 Type II paint shall be delivered in one (1) or five (5) gallon containers or in other containers as may be specified in the contract.

7.3 Each container of either Type I or Type II paint shall bear a label with the following information shown thereon: Name and address of the manufacturer and contractor, shipping point, trade mark or trade name, title and number of applicable specification, including type and class, number of gallons, date of manufacture and lot number.

TEST METHODS

8.1 The test methods to be used shall be as specified in Federal Test Method Standard Number 141, or in Federal Specification TT-A-468.

M 69

TABLE 2

Quantitative Requirements, Type II Paint

Characteristics	Requirement	
	Minimum	Maximum
Pigment, percent by weight of paint (aluminum metal)	13	17
Volatile vehicle, percent by weight of paint	43	47
Nonvolatile vehicle (by diff.), percent by weight of paint	42	46
Viscosity, seconds	35	45
Flash point, degree F	66	..
Leafing, percent	60	.
Weight per gallon, pounds	8.0	..
Drying time		
Set to touch, hours	½	2
Dry for recoating, hours		16
Reduction (Rosin Pentaerythritol), percent toughness	100	
Water (moisture) content, percent	.	0.15

O

Standard Specification for

White and Tinted Ready-Mixed Paint

AASHO DESIGNATION: M 70–70

SCOPE

1.1 This specification covers linseed oil white and tinted ready-mixed paints of the following types and classes intended for exterior use:

1.1.1 Type I

Class A—White, general purpose
Class B—Tint-base
Class C—White, special fume-proof (lead-free)

1.1.2 Type II—White lead base

1.2 Both Type I and Type II paints are intended for use as finish coats on wood, metal, and concrete For multiple coat work, the under coats may be thinned as recommended in Federal Specifications TT-P-102, 103 and 104.

1.3 Class A paint under Type I is intended for use as a white paint only and Class B paint should be used for light tints. If the paint is to be tinted on the job, Class B paint should be specified Class C white paint is a special paint (lead-free) and should be used where sulphide fumes may be encountered. Class C paint is not intended to be tinted Type II is a white lead paint suitable for use either as a white or tinted paint.

GENERAL REQUIREMENTS

2.1 The paint shall be well-ground, shall not settle or cake badly in the container and shall be readily broken up with a paddle to a smooth uniform paint of good brushing consistency. The paint when brushed on a smooth vertical surface shall dry hard and elastic to a full oil gloss within the specified period without running, streaking, or sagging.

MATERIALS

3.1 The materials used in manufacture shall conform to the requirements of the following specifications:

3.1.1 Titanium dioxide (anatase).—ASTM D 476, Type I.

3.1.2 Titanium dioxide (rutile) nonchalking.—ASTM D 476, Type II, Class II.

3.1.3 Magnesium silicate.—ASTM D 605.

3.1.4 Basic carbonate white lead.—ASTM D 81.

3.1.5 Zinc oxide: acicular type.—ASTM D 79.

3.1.6 Basic sulfate white lead.- ASTM D 82.

3.1.7 Leaded Zinc Oxide.—ASTM D 80.

3.1.8 Raw linseed oil.—ASTM D 234.

3.1.9 Heat-bodied linseed oil.—Federal Specification TT-O-367 Type II (low acid) Viscosity Z-2.

3.1.10 Turpentine.—ASTM D 13.

3.1.11 Mineral spirits.—ASTM D 235.

3.1.12 Driers.—ASTM D 600, Class B, with proper metals to give proper drying characteristics of paint.

PIGMENT

4.1 The pigment in each type of paint shall be as specified in Table I.

VEHICLE

5.1 The vehicle for each type and class of paint shall be composed of linseed oil, drier and thinner. The thinner in each case may be turpentine, volatile mineral spirits, or any mixture thereof. The vehicle of Type I, Class C paint shall be free from lead.

5.2 The vehicles shall be as specified in Table 2.

PAINT COMPOSITION

6.1 The paints shall meet the requirements specified in Table 3.

M 70

TABLE 1

Pigment Composition

Pigment	Percent by Weight							
	Type I						Type II	
	Class A		Class B		Class C			
	Min.	Max	Min.	Max.	Min.	Max.	Min.	Max.
Titanium dioxide (TiO_2).	15 0 (1)	17 0 (1)	11 0 (2)	13 0 (2)	19 0 (6)			
Zinc oxide.	25 0	27 0	25 0	27 0	38 0 (7)			
White lead.	31 0 (5)		31 0 (5)				99.0 (4)	
Magnesium silicate.		28 0		32 0 (3)		43 0		

(1) Anatase.
(2) Rutile (non-chalking)
(3) The sum of tinting colors and magnesium silicate shall not exceed 32 0%
(4) The pigment shall be basic carbonate white lead In the tinted paints the pigment shall contain not less than 95.0% basic carbonate white lead, the remainder to be high strength tinting colors
(5) The white lead and zinc oxide may consist of any mixture of basic carbonate white lead, basic sulfate white lead, leaded zinc oxide, and zinc oxide that meets the composition requirements of Table 1 At the option of the purchaser, the white lead may be required to be basic carbonate white lead
(6) Anatase with not more than half of 9 5% rutile
(7) Lead free.

M 70

TABLE 2

Vehicle Composition

Ingredient	Percent by Weight							
	Type I						Type II	
	Class A		Class B		Class C			
	Min.	Max	Min	Max.	Min.	Max.	Min	Max.
Raw linseed oil.	60 0		60 0		50.0		70.[illegible]	
Bodied linseed oil (Z-2)	16.0	20.0	16 0	20 0	20 0	26 0		15.5
Thinner and drier . .		20.0		20.0		24 0 (1)		14.0

(1) Lead-free.

M 70

TABLE 3

Paint Composition

Characteristics	Type I						Type II	
	Class A		Class B		Class C			
	Min.	Max	Min	Max	Min	Max.	Min.	Max.
Pigment, percent by weight	62.0		62.0		59 0		71 0	
Vehicle, percent by weight.		38.0		38 0		41.0		29.0
Water, percent by weight		1 0		1 0		1 0		1.0
Coarse particles, skins and other foreign matter (residue retained on a No. 325 sieve based on pigment) percent by weight		2.0		2 0		2.0		2.0
Weight per gal[illegible]	14.75		14.75		13 5		19 7	
Viscosity, K[illegible]	75	90	75	90	75	90	75	90
Drying time [illegible]		18		18		18		18

COLORS

7.1 When tinted paint is specified the color shall match that mutually agreed upon by purchaser and seller.

PACKING AND MARKING

8.1 Paint shall be delivered in such containers as may be specified in the contract. Each container shall bear a label with the following information shown thereon: name and address of the manufacturer and contractor, shipping point, trade mark or trade name, kind of paint, formula, number of gallons, date of manufacture and lot number.

METHODS OF ANALYSIS

9.1 The paint shall be analyzed in accordance with the appropriate methods of Federal Test Method Standard Number 141.

———— o ————

Standard Specification for

Red Lead Ready-Mixed Paint

AASHO DESIGNATION: M 72–70

SCOPE

1.1 This specification covers four types of red lead ready-mixed paint intended for use as prime or shop coat or for any maintenance coats which are placed on bridges, similar structural steel and other ferrous metal surfaces.

1.2 Intended use of the paint

1.2.1 Type I paint is intended for use where painting schedules do not demand recoating in less than 36 hours. The vehicle solids, being all linseed oil, offer the best opportunity to wet the metal surface painted and therefore to obtain an intimate bond of the paint with the surface despite the presence of limited amounts of corrosion products found impractical to remove.

1.2.2 Type II paint is similar to Type I with a portion of the raw linseed oil being replaced with pale heat-bodied linseed oil and with additional thinner to provide a vehicle viscosity similar to Type I. This paint dries for handling and recoating in 2 to 36 hours wth low gloss.

1.2.3 Types III and IV are semi-quick drying paints designed for use where painting schedules require handling and recoating in 16 to 24 hours. The presence of the specified amount of linseed oil in these types of paint is desirable for the purpose of obtaining intimate bonding with the metal surface because of the wetting characteristics of the oil. Care should be taken in the use of these paints to see that the application surface is well cleaned and free from rust, scale and oil since the wetting properties of these paints are low as compared to paints having vehicles composed entirely of linseed oil. Type III paint has a ratio of linseed oil to alkyd-resin solids of 1:1. It normally dries sufficiently for handling and recoating in 16 hours, but should be used only on surfaces cleaned by sand-blasting. Type IV paint has a linseed oil to alkyd-resin solid ratio of 3:1 and may be used on well cleaned wire-brushed surfaces. It normally requires 24 hours drying before handling or recoating. Type IV paint is suitable as a touch-up or intermediate field primer.

CLASSIFICATION

2.1 The ready-mixed red-lead-base paints covered by this specification shall be furnished in the following types, as specified in the invitation for bids, contract or order..

I—Red lead-raw linseed oil paint
II—Red lead-modified linseed oil paint
III—Red lead-iron oxide alkyd varnish-linseed oil paint (1:1 ratio linseed oil to alkyd resin solids)
IV—Red lead-iron oxide alkyd varnish-linseed oil paint (3:1 ratio linseed oil to alkyd resin solids)

MATERIALS

3.1 The materials used in the manufacture of these paints shall conform to' the requirements of the following specifications.

3.1.1 Red lead (97% Pb_3O_4).—ASTM D 83.

3.1.2 Red iron oxide.—ASTM D 84, Class II, Type A, except that the Fe_2O_3 content shall be a minimum of 85 percent.

3.1.3 Aluminum stearate.—Navy 52-A-12(a).

3.1.4 Magnesium silicate.—ASTM D 605.

3.1.5 Mica, 325 mesh.—ASTM D 607.

3.1.6 Raw linseed oil.—ASTM D 234.

3.1.7 Pale heatbodied linseed oil (Z-2 viscosity).—Federal Specification TT-O-367, Type I.

3.1.8 Alkyd resin.—Federal Specification TT-R-266, Type III.

3.1.9 Mineral spirits.—ASTM D 235.

3.1.10 Driers.—ASTM D 600, Class B, with proper metals to give proper drying characteristics of paints.

REQUIREMENTS

4.1 *Color.*—Types I and II shall be the usual red lead color and Types III and IV shall be the color characteristic of a blend of red iron oxide and red lead. Should colors other than those normally obtained be desired, suitable tinting pigment or pigments may be substituted as mutually agreed between purchaser and seller.

4.2 *Pigment.*—The pigment used in the formulation of the paint shall have the characteristics as specified in Table 1 for the respective types.

4.2.1 The extracted pigment, upon analysis, shall conform to the quantitative requirements of Table 2 for the respective types.

4.3 *Vehicles.*—All vehicles shall be free from rosin and rosin derivatives. The component parts of the vehicle used in the paint shall be as follows and in the proportions specified in Table 3 for the respective types.

4.3.1 *Type I.*—The vehicle shall be composed of raw linseed oil, mineral spirits, and drier.

M 72

TABLE 1

Pigment Composition

Pigment	(Percent by Weight)			
	Types I and II		Types III and IV	
	Min	Max.	Min.	Max.
Red-Lead	99.6		65.0	
Aluminum Stearate	0.3	0.4	0.3	0.4
Red iron-oxide pigment			15	
Magnesium silicate				14.7
Mica 325 mesh				6

M 72
TABLE 2
Quantitative Requirements of Extracted Pigment

Characteristics	Requirements (percent by weight)			
	Types I and II		Types III and IV	
	Min.	Max.	Min.	Max.
True red lead (Pb_3O_4)	96.5		62.5	
Iron oxide (Fe_2O_3)			12.5	
Siliceous matter				22

M 72
TABLE 3
Vehicle Composition

Ingredients	Requirements (percent by weight)							
	Type I		Type II		Type III		Type IV	
	Min.	Max.	Min.	Max.	Min.	Max.	Min.	Max.
Raw linseed oil	90		35	50	28		49	
Pale heat-bodied linseed oil (Z-2 viscosity)			15	30				
Alkyd resin solids					28		16	
Volatile thinner and drier		10		35		44		35

M 72
TABLE 4
Paint Composition

Characteristics	Requirements							
	Type I		Type II		Type III		Type IV	
	Min.	Max.	Min.	Max.	Min.	Max.	Min.	Max.
Pigment, percent by weight	77	80	77	80	66	69	68	71
Non-volatile vehicle, percent by weight of vehicle	90		65		56		65	
Moisture, percent by weight		0.5		0.5		0.5		0.5
Coarse particles, skins and other foreign matter (residue retained on No. 325 sieve based on pigment), percent by weight		1		1		2		2
Weight per gallon, pounds	24.5		24		16.7		17.0	
Drying time.								
Set to touch, hours		6		6		4		6
Dry through, hours		36		36		16		24
Viscosity, K. U.	77	95	75	89	73	86	73	86
Phthalic anhydride, percent of non-volatile vehicle					15		3	
Oil acids, percent of paint					67		78	
Iodine, No. of extracted fatty acids			147	175				

4.3.2 *Type II.*—The vehicle shall be a blend of raw linseed oil, pale heat-bodied linseed oil (Z-2 viscosity), mineral spirits and drier.

4.3.3 *Types III and IV.*—The vehicle shall consist of raw linseed oil blended with the specified alkyd resin solution together with the necessary mineral spirits and drier.

4.4 Paint quantitative requirements. The paints shall meet the quantitative requirements specified in Table 4 for the respective types.

4.5 Qualitative requirements.

4.5.1 *Condition in container.*—The paints shall not show excessive settling in a freshly opened can, and shall be easily redispersed with a paddle to a smooth homogeneous state. The paint shall show no curdling, livering, caking, or color separation, and shall be free from lumps and skins (see 4.5.6).

4.5.2 *Dilution stability.*—The paints shall remain stable and uniform after reduction in the proportions of eight parts of volume of the packaged material with not more than one part by volume of mineral spirits conforming to ASTM D 235.

4.5.3 *Brushing properties.*—The paints, as received, shall brush easily, possess good leveling properties, and show no running or sagging tendencies when applied at a spreading rate of 500 square feet per gallon to smooth steel vertical surfaces.

4.5.4 *Spraying properties.*—The paints when reduced as specified in 4.5.2 shall spray satisfactorily, show no tendency to orange-peel, sag, creep, or run, and show satisfactory spraying properties in all other respects.

4.5.5 *Skinning.*—The paints shall not skin within 48 hours in a three-quarters-filled, closed container.

4.5.6 *Appearance.*—The paints shall dry to a smooth uniform finish free from roughness, grit, unevenness, and other surface imperfections as indicated by examination of the panel prepared for determining the brushing. The paint shall show no streaking or separation when flowed on clean glass as follows. Flow a portion of the paint on a 4-inch by 12-inch clean glass plate. Let dry in a nearly vertical position at room temperature and examine the area beginning 4 inches from the top.

PACKING AND MARKING

5.1 Paint shall be delivered in such containers as may be specified in the contract. Each container shall bear a label with the following information shown thereon: name and address of the manufacturer and contractor, shipping point, trade mark or trade name, kind of paint, formula, number of gallons, date of manufacture and lot number.

METHODS OF ANALYSIS

6.1 Except as indicated in 6.2 the paint shall be analyzed in accordance with the appropriate methods of Federal Test Method Standard No. 141.

6.2 Siliceous extender and mica shall be determined as follows: Transfer 0.5 gram of the pigment to a 400-milliliter beaker. Add 15 milliliters of concentrated hydrochloric acid and heat gently until the iron oxide and red lead are completely dissolved. Evaporate to dryness and bake at 105 to 110 C., for 1 hour. Moisten the residue with a few drops of concentrated hydrochloric acid, dilute to 100 milliliters with hot water, boil, filter while hot and wash with hot water. Transfer the paper and contents to a weighted porcelain crucible, ignite, cool, and weigh. Examine the residue microscopically to determine the presence of mica. Calculate the percentage and report this residue as the siliceous extender and mica.

———— o ————

Standard Specification for

Crushed Stone and Crushed Slag for Base Course

AASHO DESIGNATION: M 75–64

SCOPE

1.1 This specification covers the quality and size of crushed stone and crushed slag for use in a crushed stone or crushed slag base course which is to be covered with any type of surface.

GENERAL REQUIREMENTS

2.1 *Crushed Stone.*—The crushed stone shall consist of clean, tough, durable fragments, free from an excess of flat, elongated, soft or disintegrated pieces.

2.2 *Crushed Slag.*—The crushed slag shall be air-cooled, blast-furnace slag and shall consist of angular fragments reasonably uniform in density and quality, and reasonably free from thin or elongated pieces, dirt or other objectionable matter.

NOTE—In addition to air-cooled blast-furnace slag, other slags having demonstrated a satisfactory service record may be used.

PHYSICAL PROPERTIES

3.1.1 *Crushed Stone.*—The crushed stone shall conform to the following requirement:

Percentage of wear, Los Angeles test, not more than	50

NOTE: This is considered the maximum safe limit for percentage of wear for this type of construction. A lower value should be specified on all work where it is economically practicable to obtain materials conforming thereto.

3.1.2 When the crushed stone is subjected to five alternations of the sodium sulfate soundness test, the weighted loss shall be not more than 12 per cent by weight.

NOTE: In certain specific cases where aggregates complying with this requirement cannot economically be obtained, aggregates with a higher percentage of loss may be used, provided a satisfactory service record of at least 5 years' duration under similar conditions of service and exposure shall have been demonstrated. In case it is desired to use magnesium sulfate, a weighted loss should be specified which experience has shown will give results corrsponding to a loss of 12 per cent when sodium sulfate is used.

3.1.3 Stone for screening shall be of suitable binding quality.

3.2 *Crushed Slag.*—The crushed slag shall conform to the following requirements:

Percentage of wear, Los Angeles test, not more than	50
Weight per cubic foot, not less than	60 lb.

NOTE: This is considered the maximum safe limit for percentage of wear and the minimum safe weight per cubic foot for this type of construction. A lower percentage of wear and a higher weight per cubic foot should be specified on all work where it is economically practicable to obtain materials conforming thereto.

GRADING

4.1 The crushed stone or crushed slag will be either (1) No. 3, the 2-in. to 1-in. size; (2) No. 2, the 2½-in. to 1½-in. size; or (3) No. 1 the 3½-in. to 1½-in. size as shown in Standard Specifications for Standard Sizes of Coarse Aggregate for Highway Construction (AASHO M 43), and shall be well-graded between these limits. When tested by means of laboratory sieves, the size designated shall conform to the following requirements:

	Per cent
(1) No. 3—2-in. to 1-in. size	
Passing a 2½-in. sieve	100
Passing a 2-in. sieve	90–100
Passing a 1½-in. sieve	35–70
Passing a 1-in. sieve	0–15
Passing a ½-in. sieve	0–5
(2) No. 2—2½-in. to 1½-in. size	
Passing a 3-in. sieve	100
Passing a 2½-in. sieve	90–100
Passing a 2-in. sieve	35–70
Passing a 1½-in. sieve	0–15
Passing a ¾-in. sieve	0–5
(3) No. 1—3½-in. to 1½-in. size	
Passing a 4-in. sieve	100
Passing a 3½-in. sieve	90–100
Passing a 2½-in. sieve	25–60
Passing a 1½-in. sieve	0–15
Passing a ¾-in. sieve	0–5

4.2 The screenings shall be the No. 4 to 0 size, well-graded from coarse to fine and free from dirt or other foreign material. When tested by means of laboratory sieves the size designated shall conform to the following requirements:

	Per cent
(1) No. 4 to 0 size	
Passing ⅜-in. sieve	100
Passing No. 4 sieve	85–100
Passing No. 100 sieve	10–30

METHODS OF SAMPLING AND TESTING

5.1 Sampling and testing of crushed stone and crushed slag shall be in accordance with the following standard methods of the American Association of State Highway

Officials:

Sampling	T 2
Percentage of wear	T 96
Soundness	T 104
Unit weight	T 19
Sieve analysis	T 27

———o———

Standard Specification for

Crushed Stone and Crushed Slag for Bituminous Concrete Base Course

AASHO Designation: M 76–64

SCOPE

1.1 This specification covers the quality and size of crushed stone and crushed slag to be used in the construction of a bituminous concrete base course.

GENERAL REQUIREMENTS

2.1 *Crushed Stone.*—The crushed stone shall consist of clean, tough, durable fragments, free from an excess of flat, elongated, soft or disintegrated pieces.

2.2 *Crushed Slag.*—The crushed slag shall be air-cooled blast-furnace slag and shall consist of angular fragments reasonably uniform in density and quality, and reasonably free from thin or elongated pieces, dirt or other objectionable matter.

Note—In addition to air-cooled blast furnace slag, other slags having demonstrated a satisfactory service record may be used.

PHYSICAL PROPERTIES

3.1 *Crushed Stone.*—The crushed stone shall conform to the following requirement:

Percentage of wear, Los Angeles test, not more than. 45

Note: This is considered the maximum safe limit for percentage of wear for this type of construction. A lower value should be specified on all work where it is economically practicable to obtain materials conforming thereto.

3.1.1 When the crushed stone is subjected to five alternations of the sodium sulfate soundness tests the weighted loss shall not be more than 12 per cent by weight.

Note: In certain specific cases where aggregates complying with this requirement cannot economically be obtained, aggregates with a higher percentage of loss may be used, provided a satisfactory service record of at least 5 years' duration under similar conditions of service and exposure shall have been demonstrated. In case it is desired to use magnesium sulfate, a weighted loss should be specified which experience has shown will give results corresponding to a loss of 12 per cent when sodium sulfate is used.

3.2 *Crushed Slag.*—The crushed slag shall conform to the following requirements:

Percentage of wear, Los Angeles test, not more than	45
Weight per cubic foot, not less than ..	60 lb

Note: This is considered the maximum safe limit for percentage of wear and the minimum safe weight per cubic foot for this type of construction. A lower percentage of wear and a higher weight per cubic foot should be specified on all work where it is economically practicable to obtain materials conforming thereto.

GRADING

4.1 The crushed stone or crushed slag shall be either (1) No. 57 the 1-in. to No. 4 size, or (2) No. 357, the 2-in. to No. 4 size, as shown in Standard Specifications for Standard Sizes of Coarse Aggregate for Highway Construction (AASHO M 43) and shall be well-graded between these limits. When tested by means of laboratory sieves, the size

designated shall conform to the following requirements:

	Per cent
(1) No. 57—1-in. to No. 4 size	
Passing 1½-in. sieve	100
Passing 1-in. sieve	95–100
Passing ½-in. sieve	25–60
Passing No. 4 sieve	0–10
Passing No. 8 sieve	0–5
(2) No. 357—2-in. to No. 4 size	
Passing 2½-in. sieve	100
Passing 2-in. sieve	95–100
Passing 1-in. sieve	35–70
Passing ½-in. sieve	10–30
Passing No. 4 sieve	0–5

NOTE: Either of the above size [illegible] combination thereof may be specified as desired.

METHODS OF SAMPLING AND TESTING

5.1 Sampling and testing of crushed stone or crushed slag shall be in accordance with the following standard methods of the American Association of State Highway Officials:

Sampling	T 2
Percentage of wear	T 96
Soundness	T 104
Weight per cubic foot	T 19
Sieve analysis	T 27

—— —— o ——

Standard Specification for

Crushed Stone and Crushed Slag for Bituminous Concrete Surface Course

AASHO DESIGNATION: M 79–64

SCOPE

1.1 This specification covers the quality and size of crushed stone and crushed slag to be used in the construction of fine-graded bituminous concrete pave[illegible]s (Modified Topeka, or stone filled sheet asphalt) and coarse-graded bituminous concrete, including asphaltic concrete binder.

GENERAL REQUIREMENTS

2.1 *Crushed Stone.*—The crushed stone shall consist of clean, tou[illegible] durable fragments, free from an excess of flat, elongated, soft or disintegrated pieces and free from stone coated with dirt or other objectionable matter.

2.2 *Crushed Slag.*—The crushed slag shall be air-cooled blast-furnace slag and shall consist of angular fragments reasonably uniform in density and quality, and reasonably free from thin or elongated pieces, dirt or other objectionable matter.

NOTE—In addition to air-cooled blast-furnace slag, other slags having demonstrated a satisfactory service record may be used.

PHYSICAL PROPERTIES

3.1.1 *Crushed Stone.*—The crushed stone shall conform to the following requirement:

Percentage of wear, Los Angeles test, not more than	40

NOTE: This is considered the maximum safe limit for percentage of wear for this type of construction. A lower value should be specified on all work where it is economically practicable to obtain materials conforming thereto.

3.1.2 When the crushed stone is subjected to five alternations of the sodium sulfate soundness test the weighted loss shall not exceed 12 per cent by weight.

NOTE: In certain specific cases where aggregates complying with this requirement cannot economically be obtained aggregates with a higher percentage of loss may be used, provided a satisfactory service record of at least 5 years' duration under similar conditions of service and exposure shall have been demonstrated. In case it is desired to use magnesium sulfate, a weighted loss should be specified which experience has shown will give results corresponding to a loss of 12 percent when sodium sulfate is used

3.2 *Crushed Slag.*—The crushed slag shall conform to the following requirements:

Percentage of wear, Los Angeles test, not more than	40
Weight per cubic foot, not less than	70 lb.

NOTE: This is considered the maximum safe limit for percentage of wear and the minimum safe weight per cubic foot for this type of construction A lower percentage of wear and a higher weight per cubic foot should be specified on all work where it is economically practicable to obtain materials conforming thereto.

GRADING

4.1 The crushed stone or crushed slag for fine graded bituminous concrete shall be No. 7, the ½-in. to No. 4 size as shown in AASHO M 43, and shall be well-graded between these limits. When tested by means of laboratory sieves it shall conform to the following requirements:

No 7—½ in. to No. 4 size	Per cent
Passing ¾-in. sieve	100
Passing ½-in. sieve	90–100
Passing ⅜-in sieve	40–70
Passing No. 4 sieve	0–15
Passing No 8 sieve	0–5

4.2 The crushed stone or crushed slag for coarse-graded bituminous concrete or asphaltic concrete binder shall be No. 57, the 1 in. to No. 4 size as shown in AASHO M 43, and shall be well-graded between these limits. When tested by means of laboratory sieves, it shall conform to the following requirements:

No. 57—1-in. to No 4 size	Per cent
Passing 1½-in. sieve	100
Passing 1-in. sieve	95–100
Passing ½ in sieve	25–60
Passing No. 4 sieve	0–10
Passing No. 8 sieve	0–5

METHODS OF SAMPLING AND TESTING

5.1 Sampling and testing of crushed stone and crushed slag for bituminous concrete surface course shall be in accordance with the following standard methods of the American Association of State Highway Officials:

Sampling	T 2
Percentage of wear	T 96
Soundness	T 104
Unit weight	T 19
Sieve analysis	T 27

———— o ————

Standard Specification for

Coarse Aggregate for Portland Cement Concrete

AASHO DESIGNATION: M 80–70

SCOPE

1.1 This specification covers the quality and size of coarse aggregate for use in concrete pavements or bases, highway bridges, and incidental structures.

GENERAL REQUIREMENTS

2.1 Coarse aggregates shall consist of crushed stone, gravel, blast furnace slag, or

other approved inert materials of similar characteristics, or combinations thereof, having hard, strong, durable pieces, free from adherent coatings and conforming to the requirements of these specifications.

DELETERIOUS SUBSTANCES

3.1 The amount of deleterious substances shall not exceed the following limits:

	Recommended permissible limit percent by wt.	Maximum permissible limit percent by wt.
1. Soft fragments	2	5
2. Coal and lignite (Note 1)	0.25	1
3. Clay lumps	0.25	0.25
4. Material passing the No. 200 sieve	0.5[a]	1.0[a]
5. Thin or elongated pieces (length greater than 5 times average thickness)	As specified	As specified
6. Other local deleterious substances	As specified	As specified

[a] In the case of crushed aggregates, if the material finer than the No. 200 sieve consists of the dust of fracture, essentially free from clay or shale, the percentages may be increased to 1.0 and 1.5, respectively.

NOTE 1.—For the purpose of this specification coal and lignite are defined as that material that floats on a liquid having a specific gravity of 2.0 and which is brownish-black, or black. Coke is not classed as coal or lignite.

NOTE 2—The recommended requirements should be specified on all work where it is economically practicable to obtain materials conforming thereto. Only one set of figures for percentage by weight should be included in any single specification.

PERCENTAGE OF WEAR

4.1 Coarse aggregate shall conform to the following requirement:

Percentage of wear, Los Angeles test, not more than . . 40

NOTE: In certain specific cases where aggregate of this quality cannot economically be obtained aggregate with a higher percentage of wear may be used if a satisfactory service record of at least 5 years' duration under similar conditions of service and exposure shall have been demonstrated.

WEIGHT PER CUBIC FOOT OF SLAG

5.1 Slag shall conform to the following requirments:

Weight per cubic foot, not less than . . 70 lb.

NOTE: This is considered the minimum safe limit for weight per cubic foot of slag for this type of construction. A higher weight per cubic foot should be specified on all work where it is economically practicable to obtain materials conforming thereto.

SOUNDNESS

6.1 When the coarse aggregate is subjected to five alternations of the sodium sulfate soundness test, the weighted loss shall not exceed 12 per cent.

NOTE: In certain specific cases where aggregates complying with this requirements cannot economically be obtained aggregates with a higher percentage of loss may be used, provided a satisfactory service record of at least 5 years' duration under similar conditions of service and exposure shall have been demonstrated. In case it is desired to use magnesium sulfate, a weighted loss should be specified which experience has shown will give results corresponding to a loss of 12 per cent when sodium sulfate is used.

6.2 Coarse aggregate failing to meet the requirement given in 6.1 may, at the option of the Engineer, be subjected to an alternate freezing and thawing test and may be accepted provided the weighted loss at the end of ——— alternations does not exceed ——— per cent.

NOTE: The Engineer should insert appropriate requirements based on his experience with the test.

6.3 The requirements for soundness given in 6.1 and 6.2 above may be waived in

the case of aggregate for use in structures or portions of structures not exposed to weathering.

GRADING

7.1 Coarse aggregate shall be well-graded, between the limits specified, and the size or sizes designated shall conform to the requirements given in Table 1.

NOTE. Attention is called to the fact that the shape of aperture specified for determining compliance with specifications for size of coarse aggregate has no relation to the size or shape of aperture or type of screen used in the production of the material.

M 80

TABLE 1

Designated Sizes	Percentage by Weight Passing Laboratory Sieves Having Square Openings, in Inches							
	2½	2	1½	1	¾	½	⅜	No. 4
½-in. to No. 4 (No. 7)	.		.	.	100	90–100	40–70	0–15*
¾-in. to No. 4 (No. 67)	..	. .	...	100	90–100	. .	20–55	0–10*
1-in. to No. 4 (No. 57)	.	.	100	95–100	..	25–60	.	0–10*
1½-in. to No. 4 (No. 467)		100	95–100		35–70	...	10–30	0–5
2-in. to No. 4 (No. 357)	100	95–100		35–70	..	10–30	.	0–5
1½-in. to ¾-in. (No. 4)		100	90–100	20–55	0–15	...	0–5	..
2-in. to 1-in. (No. 3)	100	90–100	35–70	0–15	...	0–5	.	...

* Not more than 5 per cent shall pass a No. 8 sieve

METHODS OF SAMPLING AND TESTING

8.1 Sampling and testing of the coarse aggregate shall be in accordance with the following standard methods of the American Association of State Highway Officials:

Sampling	T 2
Material passing the No. 200 sieve	T 11
Friable particles	T 112
Coal and lignite	T 113
Percentage of wear	T 96
Sieve analysis	T 27
Soundness (sodium or magnesium sulfate)	T 104
Soundness (freezing and thawing)	T 103
Unit weight (slag)	T 19
Soft fragments	T 89

———— o ————

Standard Specification for

Cut-Back Asphalt (Rapid Curing Type)

AASHO DESIGNATION: M 81–70

SCOPE

1.1 This specification covers liquid petroleum products, produced by fluxing an asphaltic base with suitable petroleum distillates, to be used in the treatment of road surfaces.

GENERAL REQUIREMENTS

2.1 The cut-back asphalt shall show no separation or curdling prior to use and shall not foam when heated to the application temperature.

PROPERTIES

3.1 Cut-back asphalt of the grade designated shall conform to the requirements shown in Table 1. (See page 88.)

METHODS OF SAMPLING AND TESTING

4.1 Sampling and testing cut-back asphalt (rapid curing type) shall be in accordance with the following standard methods of the American Association of State Highway Officials.

Sampling	T 40
Water	T 55
Flash point	T 79
Kinematic viscosity	T 201
Saybolt Furol viscosity	T 72
Distillation	T 78
Penetration	T 49
Ductility	T 51
Solubility in trichloroethylene	T 44
Spot test	T 102

TABLE 1

	RC-70		RC-250		RC-800		RC-3000	
	Min.	Max	Min.	Max	Min	Max	Min.	Max
Water, percent	...	0.2		0.2	...	0.2		0.2
Flash point (tag. open cup), degrees C (F)			26.7	(80)	26.7	(80)	26.7	(80)
Kinematic Viscosity at 60 C (140 F) (See Note 1) centistokes	70	140	250	500	800	1600	3000	6000
Distillation test.								
Distillate, percentage by volume of total distillate to 360 C (680 F)								
to 190 C (374 F)	10	..	...	...	...	...	...	...
to 225 C (437 F)	50	...	35	...	15	...	...	...
to 260 C (500 F)	70	...	60	...	45	...	25	...
to 315 C (600 F)	85	...	80	...	75	...	70	...
Residue from distillation to 360 C (680 F) volume percentage of sample by difference	55		65		75	.	80	.
Tests on residue from distillation								
Penetration, 100g, 5 sec, at 25 C (77 F)	80	120	80	120	80	120	80	120
Ductility, 5 cm/min 25 C (77 F) cm	100	.	100	...	100	.	100	. .
Solubility in trichloroethylene, percent	99.0		99.0		99.0	...	99.0	
Spot test (see Note 2) with:								
Standard naphtha	Negative for all grades							
Naphtha-xylene solvent, ——— percent xylene	Negative for all grades							
Heptane-xylene solvent, ——— percent xylene	Negative for all grades							

NOTE 1. As an alternate, Saybolt-Furol viscosities may be specified as follows:
Grade RC-70—Furol viscosity at 50 C (122 F)—60 to 120 sec.
Grade RC-250—Furol viscosity at 60 C (140 F)—125 to 250 sec.
Grade RC-800—Furol viscosity at 82.2 C (180 F)—100 to 200 sec
Grade RC-3000—Furol viscosity at 82.2 C (180 F)—300 to 600 sec.

NOTE 2. The use of the spot test is optional When specified, the Engineer shall indicate whether the standard naphtha solvent, the naphtha xylene solvent or the heptane xylene solvent will be used in determining compliance with the requirement, and also, in the case of the xylene solvents, the percentage of xylene to be used.

———— o ————

Standard Specification for

Cut-Back Asphalt (Medium Curing Type)

AASHO DESIGNATION: M 82–70

SCOPE

1.1 This specification covers liquid petroleum products, produced by fluxing an asphaltic base with suitable petroleum distillates, to be used in the treatment of road surfaces.

GENERAL REQUIREMENTS

2.1 The cut-back asphalt shall show no separation or curdling prior to use and shall not foam when heated to the application temperature.

PROPERTIES

3.1 Cut-back asphalt of the grade designated shall conform to the requirements shown in Table 1.

METHODS OF SAMPLING AND TESTING

4.1 Sampling and testing cut-back asphalt (medium curing type) shall be in accordance with the following standard methods of the American Association of State Highway Officials

Sampling	T 40
Water	T 55
Flash point	T 79
Kinematic viscosity	T 201
Saybolt Furol viscosity	T 72
Distillation	T 78
Penetration	T 49
Ductility	T 51
Solubility in trichloroethylene	T 44
Spot test	T 102

M 82

TABLE 1

	MC-30		MC-70		MC-250		MC-800		MC-3000	
	Min.	Max.	Min.	Max.	Min.	Max	Min	Max	Min.	Max
Water, percent		0.2		0.2		0.2		0.2		0.2
Flash point (tag open cup), degrees C (F)	(100)	37.8	(100)	37.8	(150)	65	(150)	65	(150)	65
Kinematic viscosity at 60 C (140 F) (see Note 1) centistokes	30	60	70	140	250	500	800	1600	3000	6000
Distillation test										
Distillate, percentage by volume of total distillate to 360 C (680 F)										
to 225 C (437 F)		25	0	20	0	10				
to 260 C (500 F)	40	70	20	60	15	55	0	35	0	15
to 315 C (600 F)	75	93	65	90	60	87	45	80	15	75
Residue from distillation to 360 C (680 F) volume percentage of sample by difference	50		55		67		75		80	
Tests on residue from distillation										
Penetration 100 g., 5 sec. at 25 C (77 F)	120	250	120	250	120	250	120	250	120	250
Ductility, 5 cm/min. cm (See Note 2)	100		100		100		100		100	
Solubility in Trichloroethylene, percent	99.0		99.0		99.0		99.0		99.0	
Spot test (see Note 3) with										
Standard naphtha	Negative for all grades									
Naphtha-xylene solvent, ——— percent xylene	Negative for all grades									
Heptane-xylene solvent ——— percent xylene	Negative for all grades									

NOTE 1 As an alternate, Saybolt Furol viscosities may be specified as follows

Grade MC-70—Furol viscosity at 50 C (122 F)—60 to 120 sec.
Grade MC-30—Furol viscosity at 25 C (77 F)—75 to 150 sec
Grade MC-250—Furol viscosity at 60 C (140 F)—125 to 250 sec.
Grade MC-800—Furol viscosity at 82.2 C (180 F)—100 to 200 sec.
Grade MC-3000—Furol viscosity at 82.2 C (180 F)—300 to 600 sec.

NOTE 2. If penetration of residue is more than 200 and its ductility at 25 C (77 F) is less than 100 cm, the material will be acceptable if its ductility at 15.5 C (60 F) is more than 100 cm.

NOTE 3. The use of the spot test is optional. When specified, the Engineer shall indicate whether the standard naphtha solvent, the naphtha xylene solvent, or the heptane xylene solvent will be used in determining compliance with the requirement, and also, in the case of the xylene solvents, the percentage of xylene to be used.

———— o ————

Standard Specification for

Portland Cement

AASHO DESIGNATION: M 85–70

SCOPE

1.1 This specification covers five types of portland cement, as follows:

Type I. For use in general concrete construction when the special properties specified for types II, III, IV and V are not required.

Type II. For use in general concrete construction exposed to moderate sulfate action, or where moderate heat of hydration is required.

Type III. For use when high early strength is required.

Type IV. For use when a low heat of hydration is required. (Note.)

Type V. For use when high sulfate resistance is required. (Note.)

NOTE 1.—Attention is called to the fact that cements conforming to the requirements for type IV and type V are not usually carried in stock. In advance of specifying their use, purchasers or their representatives should determine whether these types of cement are, or can be made available.

BASIS OF PURCHASE

2.1 The purchaser should specify the type or types desired. When no type is specified, the requirements of type I shall govern.

DEFINITION

3.1 Portland cement is the product obtained by pulverizing clinker consisting essentially of hydraulic calcium silicates to which no additions have been made subsequent to calcination other than water and/or untreated calcium sulfate, except that additions of other nondeleterious materials may be added at the option of the manufacturer in an amount not to exceed 0.1 per cent.

CHEMICAL LIMITS

4.1 Portland cement of each of the five types shown in Section 1 shall conform to the requirements prescribed in Table 1.

PHYSICAL REQUIREMENTS

5.1 Portland cement of each of the five types shown in Section 1 shall conform to the requirements prescribed in Table 2.

PACKAGING AND MARKING

6.1 When the cement is delivered in packages, the name and brand of the manufacturer and the type shall be plainly identified thereon, except that, in the case of type I cement, the type need not be identified. When the cement is delivered in bulk this information shall be contained in the shipping advices accompanying the shipment. A bag shall contain 94 lb. net. A barrel shall consist of 376 lb. net. All packages shall be in good condition at the time of inspection.

STORAGE

7.1 The cement shall be stored in such a manner as to permit easy access for proper inspection and identification of each shipment, and in a suitable weathertight building that will protect the cement from dampness and minimize warehouse set.

INSPECTION

8.1 Every facility shall be provided the purchaser for careful sampling and inspection at either the mill or at the site of the work, as may be specified by the purchaser. The following periods from time of sampling shall be allowed for completion of testing:

1-day test	6 days
3-day test	8 days
7-day test	12 days
28-day test	33 days

REJECTION

9.1 The cement may be rejected if it fails to meet any of the requirements of this specification.

9.2 Cement remaining in bulk storage at the mill, prior to shipment, for a period greater than six months, or cement in bags in local storage in the hands of a vendor for more than three months, after completion of the tests may be retested and may be rejected if it fails to conform to any of the requirements of this specification.

9.3 Packages varying more than 5 per cent from the specified weight may be rejected; and if the average weight of packages in any shipment, as shown by weighing 50 packages taken at random, is less than that specified, the entire shipment may be rejected.

9.4 Cement failing to meet the test for soundness in the autoclave may be accepted if it passes a retest, using a new sample, at any time within 28 days thereafter. The provisional acceptance of the cement at the mill shall not deprive the purchaser of the right to reject on a retest of soundness at the time of delivery of the cement to the purchaser.

M 85

TABLE 1

Chemical Requirements

	Type I	Type II	Type III	Type IV (1)	Type V (1)
Silicon dioxide (SiO_2), min, per cent		21.0			
Aluminum oxide (Al_2O_3), max, per cent		6.0			
Ferric oxide (Fe_2O_3), max, per cent		6.0		6.5	
Magnesium oxide (MgO), max, per cent	5.0	5.0	5.0	5.0	4.0
Sulfur trioxide (SO_3), max, per cent					
When $3CaO \cdot Al_2O_3$ is 8 per cent or less	3.0	3.0	3.5	2.3	2.3
When $3CaO \cdot Al_2O_3$ is more than 8 per cent	3.5		4.5		
Loss on ignition, max, per cent	3.0	3.0	3.0	2.5	3.0
Insoluble residue, max, per cent	0.75	0.75	0.75	0.75	0.75
Sodium and potassium oxide (Na_2O + 0.658 K_2O), max, per cent (2)	0.6	0.6	0.6	0.6	0.6
Tricalcium silicate ($3CaO \cdot SiO_2$), (3) max, per cent		55 (5)		35	
Dicalcium silicate ($2CaO \cdot SiO_2$), (3) min, per cent				40	
Tricalcium aluminate ($3CaO \cdot Al_2O_3$), (3) max, per cent	15	8	15 (4)	7	5
Tetracalcium aluminoferrite plus twice the tricalcium aluminate (3) ($4CaO \cdot Al_2O_3 \cdot Fe_2O_3$ + $2(3CaO \cdot Al_2O_3)$, or solid solution ($4CaO \cdot Al_2O_3 \cdot Fe_2O_3$ + $2CaO \cdot Fe_2O_3$), as applicable, max, per cent		...		...	20.0

(1) See Note 1.

(2) This requirement applies only when the Engineer specifies "low-alkali cement." Such cement should be specified only [illegible] aggregates are to be used in the concrete. The maximum value of 0.6% may be reduced when the [illegible] is desirable.

(3) [illegible] calculated assumed compounds does not necessarily mean that the [illegible] compounds.

When the ratio of percentages of aluminum oxide to ferric oxide is 0.64 or more, the percentages of tricalcium silicate, dicalcium silicate, tricalcium aluminate and tetracalcium aluminoferrite shall be calculated from the chemical analysis as follows.

Tricalcium silicate = (4.071 × per cent CaO) − (7.600 × per cent SiO_2) − (6.718 × per cent Al_2O_3) − (1.430 × per cent Fe_2O_3) − (2.852 × per cent SO_3)

Dicalcium silicate = (2.867 × per cent SiO_2) − (0.7544 × per cent C_3S)

Tricalcium aluminate = (2.650 × per cent Al_2O_3) − (1.692 × per cent Fe_2O_3)

Tetracalcium aluminoferrite = 3.043 × per cent Fe_2O_3

When the alumina ferric oxide ratio is less than 0.64, a calcium aluminoferrite solid solution (expressed as ss ($C_4AF + C_2F$)) is formed. Contents of this solid solution and of tricalcium silicate shall be calculated by the following formulas

ss ($C_4AF + C_2F$) = (2.100 × per cent Al_2O_3) + (1.702 × per cent Fe_2O_3)

Tricalcium silicate = (4.071 × per cent CaO) − (7.600 × per cent SiO_2) − (4.479 × per cent Al_2O_3) − (2.859 × per cent Fe_2O_3) − (2.852 × per cent SO_3)

No tricalcium aluminate will be present in cements of this composition. Dicalcium silicate shall be calculated as previously shown.

In the calculation of C_3A, the values of Al_2O_3 and Fe_2O_3 determined to the nearest 0.01 per cent shall be used. Values for C_3A and for the sum of $C_4AF + 2C_3A$ shall be reported to the nearest 0.1 per cent. Values for other compounds shall be reported to the nearest 1 per cent.

(4) When moderate sulfate resistance is required for type III cement, tricalcium aluminate may be limited to 8 per cent. When high sulfate resistance is required, the tricalcium aluminate may be limited to 5 per cent.

(5) When moderate heat of hydration is required, a limit of 58 per cent on the total tricalcium silicate and tricalcium aluminate shall apply for type II cement.

M 85

TABLE 2

Physical Requirements

	Type I	Type II	Type III	Type IV (1)	Type V (1)
Fineness, specific surface, sq. cm. per g. (alternate methods) (2)					
Turbidimeter test					
Average value, min	1,600	1,600		1,600	1,600
Min. value, any one sample	1,500	1,500		1,500	1,500
Average value, max.	2,200	2,200		2,200	2,200
Max. value, any one sample	2,300	2,300		2,300	2,300
Air permeability test					
Average value, min	2,800	2,800		2,800	2,800
Min. value, any one sample	2,600	2,600		2,600	2,600
Average value, max.	4,000	4,000		4,000	4,000
Max. value, any one sample	4,200	4,200		4,200	4,200
Soundness					
Autoclave expansion, max., per cent	0.50	0.50	0.50	0.50	0.50
Time of setting (alternate methods) (3)					
Gillmore test					
Initial set, min., not less than	60	60	60	60	60
Final set, hr., not more than	10	10	10	10	10
Vicat test (T131)					
Set, min., not less than	45	45	45	45	45
Air content (5)					
Air content of mortar prepared and tested in accordance with Method T 137, max. per cent by volume	12.0	12.0	12.0	12.0	12.0
Tensile strength, psi (4)					
The average tensile strength of not less than three standard mortar briquets prepared in accordance with Method T 132, shall be equal to or higher than the values specified for the ages indicated below					
1 day in moist air			275		
1 day in moist air, 2 days in water	150	125	375		
1 day in moist air, 6 days in water	275	250		175	250
1 day in moist air, 27 days in water	350	325		300	325
Compressive strength, psi (4)					
The average compressive strength of not less than three mortar cubes, prepared in accordance with Method T 106, shall be equal to or higher than the values specified for the ages indicated below					
1 day in moist air			1,700		
1 day in moist air, 2 days in water	1,200	1,000	3,000		
1 day in moist air, 6 days in water	2,100	1,800		800	1,500
1 day in moist air, 27 days in water	3,500	3,500		2,000	3,000
False set, final penetration, min. per cent (6)	50	50	50	50	50

(1) See Note, Section 1.

(2) Either of the two alternate fineness methods may be used at the option of the test laboratory. However in case of dispute or when the sample fails to meet the requirements of the Blaine method, the Wagner turbidimeter shall be used, and the requirements in Table 2 for this method shall govern.

(3) The purchaser should specify the type of setting time test required. In case he does not so specify, or in case of dispute, the requirements of the Vicat test only shall govern.

(4) The purchaser shall specify the type of strength test desired. In case he does not so specify, the requirements of the compressive strength test only shall govern. Unless otherwise specified, the strength tests of types I and II cement will be made only at 1 and 7 days. The strength at any age shall be higher than that of the next preceding age.

(5) Cement producing an air content of mortar between 12 and 16 per cent may be used at the discretion of the [illegible] when it is to be used in air entraining concrete [illegible] the air content of the concrete is controlled at the mixer.

(6) This requirement applies only when specifically [illegible]

METHODS OF SAMPLING AND TESTING

10.1 The sampling and testing of portland cement shall be in accordance with the following standard methods of the American Association of State Highway Officials:

Sampling	T 127
Chemical analysis	T 105

NOTE: Sodium and potassium oxides may be determined by either the flame photometry method outlined in T 105, Part II, or the gravimetric method outlined in T 105, Part I.

Fineness	
Turbidimeter	T 98
Air permeability	T 153
Soundness	T 107
Time of setting:	
Gillmore needles	T 154
Vicat	T 131
Air content of mortar	T 137
Normal consistency	T 129
Tensile strength	T 132
Compressive strength	T 106
False set	T 186

———— o ————

Standard Specification for

Concrete Sewer, Storm Drain, and Culvert Pipe

AASHO DESIGNATION: M 86–68

(ASTM DESIGNATION: C 14–68T)

SCOPE

1.1 This specification covers nonreinforced concrete pipe intended to be used for the conveyance of sewage, industrial wastes, storm water, and for the construction of culverts.

NOTE—The values stated in U.S. customary units are to be regarded as the standard. The metric equivalents of U.S. customary units given in the body of the standard and in the appendix are approximate.

CLASSIFICATION

2.1 Pipe manufactured according to these specifications shall be of two classes known respectively as "Standard-Strength Nonreinforced Concrete Pipe" and "High-Strength Nonreinforced Concrete Pipe."

BASIS OF ACCEPTANCE

3.1 The acceptability of the pipe shall be determined by the results of strength, absorption, and permeability tests if and when required, and by inspection to determine whether the pipe conforms to these specifications as to design and freedom from defects.

3.2 *Acceptance as to Strength Properties.*—Pipe shall be acceptable under the strength tests when all test pipe conform to the test requirements. Should any of the preliminary test pipe provided for in 5.2 fail to meet the test requirements, then the manufacturer will be allowed a retest on two additional pipe for each pipe that failed, and the pipe shall be acceptable only when all these retest pipe meet the strength requirements.

3.3 *Acceptance as to Absorption Properties.*—Pipe shall be acceptable under the absorption test when all test pipe conform to the test requirements. When not more than 20 per cent of the test pipe fail to pass the absorption requirements of this specification, the manufacturer may cull his stock and may eliminate whatever quantity of pipe he desires and must so mark the pipe that they will not be shipped. The required tests shall be made on the balance of the order and they shall be accepted if they conform to the test requirements.

3.4 *Acceptance as to Permeability Properties.*—Pipe shall be acceptable when not less than 80 per cent of the pipe tested meet the permeability requirements. When more than 20 per cent of the test pipe fail to pass the requirements of this specification, the manufacturer may cull his stock and may eliminate whatever quantity of pipe he desires and must so mark those pipe that they will not be shipped The required tests shall be made on the balance of the order and they shall be accepted if they conform to the test requirements.

NOTE—Prior to purchase, the purchaser may specify the hydrostatic test prescribed in 9 1 instead of the permeability test.

MATERIALS AND MANUFACTURE

4.1 *Concrete.*—The concrete shall consist of portland cement, mineral aggregates, and water.

4.2 *Cement.*—Portland cement shall conform to the requirements of AASHO M 85 for Portland Cement, or shall be air-entraining portland cement conforming to the requirements of AASHO M 134; for Air-Entraining Portland Cement, or shall be portland blast-furnace slag cement conforming to the requirements of ASTM C 595, for Blended Hydraulic Cements.

4.3 *Aggregate.*—Aggregates shall conform to AASHO M 6 and M 80 for Concrete Aggregates, except that the requirement for gradation shall not apply and a loss of 50 percent in the Los Angeles Test shall be permitted.

4.4 *Mixture.*—The aggregates shall be so sized and so graded and proportioned and thoroughly mixed in a batch mixer with such proportions of cement and water as will produce a homogeneous concrete mixture of such quality that the pipe will conform to the test and design requirements of these specifications Admixtures or blends may be used with the approval of the consumer In no case, however, shall the proportion of portland cement in the mixture be less than six U.S. standard bags 94 lb (43 kg)/yd^3 (0.77 m^3) of concrete.

4.5 *Curing.*—Pipe shall be subjected to any one of the methods of curing described in 4.5.1 through 4 5 4, or to any other method or combination of methods approved by the purchaser that will give satisfactory results The pipe shall be cured for a sufficient length of time so that the concrete will develop the specified strength requirement at 28 days or less

4.5.1 *Steam Curing.*—Pipe may be placed in a curing chamber, free from outside drafts, and cured in a moist atmosphere maintained by the injection of steam for such time and such temperature as may be needed to enable the pipe to meet the strength requirements. The curing chamber shall be so constructed as to allow full circulation of steam around the entire pipe.

4.5.2 *Water Curing.*—Concrete pipe may be water-cured by covering with water saturated material or by a system of perforated pipes, mechanical sprinklers, porous hose, or by any other approved method that will keep the pipe moist during the specified curing period.

4.5.3 The manufacturer may, at his option, combine the methods described in 4.5.1 and 4.5.2 as long as the specified strength is attained

4.5.4 A sealing membrane conforming to the requirements of AASHO M 145 for Liquid Membrane-Forming Compounds for Curing Concrete may be applied and should be left intact until the specified strength requirements are met. The concrete at the time of application shall be within 5.5C (10 F) of the atmospheric temperature. All surfaces shall be kept moist prior to the application of the compounds and shall be damp when the compound is applied.

TEST PIPE

5.1 *Selection of Pipe.*—The pipe to be tested shall be selected by the purchaser or his representative at the point or points designated by him when placing the order.

5.2 *Number of Pipe.*—The manufacturer or seller shall furnish, without charge, pipe for crushing and absorption tests, up to 0.5 per cent of the number of pipe of each size included in the order, except that in no case shall less than two pipe be furnished. The test pipe shall be sound, full-size pipe.

TABLE 1
Physical and Dimensional Requirements for Standard Strength, Bell and Spigot Nonreinforced Concrete Pipe[a,b]

Internal Diameter, in.	Thickness of Wall T, in.	Inside Diameter at Mouth of Socket,[c] D_s, in.	Depth of Socket L_s, in.	Minimum Taper of Socket, $H:L_s$	Minimum Thickness of Socket,[d] T_s	Minimum Strength, lb/linear ft Three-edge Bearing Method
1	2	3	4	5	6	7
4	9/16	6	1½	1.20	3T/4 all sizes	1000
6	5/8	8½	2	1.20		1100
8	3/4	10⅝	2⅛	1.20		1300
10	7/8	13	2½	1.20		1400
12	1	15¼	2½	1.20		1500
15	1⅛	18⅝	2½	1.20		1750
18	1¼	22¼	2¾	1.20		2000
21	1⅜	25¾	2¾	1.20		2200
24	2⅛	29½	3	1.20		2400

[a] See Fig. 1 also.
[b] Subject to Tolerances in Table 3.
[c] When pipe are furnished having an increase in thickness over that given in column 2, then the diameter at the inside of the socket shall be increased by an amount equal to twice the increase of the wall.
[d] This measurement shall be taken ¼ in. (6.4 mm) from the outer end of the socket.

TABLE 1A
Metric Physical and Dimensional Requirements for Standard Strength, Bell and Spigot Nonreinforced Concrete Pipe[a,b]

NOTE.- This metric table is for use on a metric basis only and is not absolutely equal to U.S. customary unit systems.

1	2	3	4	5	6	7
Internal Diameter, cm (in.)	Thickness of Wall T, cm	Inside Diameter at Mouth of Socket,[c] D_s, cm	Depth of Socket, L_s', cm	Minimum Taper of Socket, $H:L_s$	Minimum Thickness of Socket,[d] T_s	Minimum Strength, Three-edge Bearing Method, kg/linear cm
10 (4)	1.43	15.2	3.8	1.20 all sizes	3T/4 all sizes	14.88
15 (6)	1.59	21.0	5.1			16.37
20 (8)	1.90	27.3	5.7			19.55
25 (10)	2.22	33.0	6.4			20.83
31 (12)	2.54	38.7	6.4			22.32
38 (15)	3.18	47.6	6.4			26.04
46 (18)	3.81	56.5	7.0			29.76
53 (21)	4.45	65.4	7.0			32.76
61 (24)	5.40	74.9	7.62			35.72

[a] See Fig. 1. also.
[b] Subject to Tolerances in Table 3.
[c] When pipe are furnished having an increase in thickness over that given in column 2, then the diameter at the inside of the socket shall be increased by an amount equal to twice the increase of the wall.
[d] This measurement shall be taken ¼ in. (6.4 mm) from the outer end of the socket.

TABLE 2
Physical and Dimensional Requirements for Extra Strength Nonreinforced Concrete Pipe [a, b]

Internal Diameter, in.	Thickness of Wall,[b] in.	Minimum Strength, lb/linear ft Three-edge Bearing Method
1	2	3
4	5/8	2000
6	3/4	2000
8	7/8	2000
10	1	2000
12	1 3/8	2250
15	1 5/8	2750
18	2 1/4	3300
21	2 3/4	3950
24	3	4000

[a] See 8.3.1 and 8.3.2.
[b] Where tongue and groove pipe is furnished, it shall have a minimum wall thickness of 1 3/4 in. (4.45 cm) except that the above minimum thickness applies if the groove end is modified to give a groove thickness equal to three-[illegible] the pipe. This measurement shall be taken [illegible] of the groove [illegible] Table 3

TABLE 2A
Metric Physical and Dimension Requirements for Extra Strength Nonreinforced Concrete Pipe [a, c]

NOTE.—This metric table is for use on a metric basis only and is not absolutely equal to U.S. customary unit systems

1	2	3
Internal Diameter, cm (in.)	Thickness of Wall,[b] cm	Minimum Strength, Three-edge Bearing Method, kg/linear cm
10 (4)	1.90	29.76
15 (6)	1.90	29.76
20 (8)	2.22	29.76
25 (10)	2.54	29.76
31 (12)	3.49	33.48
38 (15)	4.13	40.92
46 (18)	5.72	49.11
53 (21)	6.99	57.29
61 (24)	7.62	59.53

[a] See 8.3.1 and 8.3.2
[b] Where tongue and groove pipe is furnished, it shall have a minimum wall thickness of 1 3/4 in. (4.45 cm) except that the above minimum thickness applies if the groove end is modified to give a groove thickness equal to three-fourths the thickness of the wall of the pipe. This measurement shall be taken 1/4 in. (6.4 mm) from the outer end of the groove.
[c] Subject to tolerances in Table 3.

5.3 *Measurement and Observation of Pipe.*—The test pipe shall first be freed from all visible moisture. When dry, each pipe shall be measured and inspected. The results of these observations shall be recorded.

5.4 *Defective Pipe.*—Pipe which is observed to have cracks or other defects in form or dimensions in excess of the limits permitted in these specifications, shall be discarded and replaced with additional pipe from the shipment.

PHYSICAL TEST REQUIREMENTS

6.1 *Crushing Strength.*—The crushing strength of nonreinforced concrete pipe shall conform to the requirements prescribed in Tables 1 and 2.

6.2 *Absorption.*—The absorption shall be determined by the boiling absorption test and shall not exceed 8 percent.

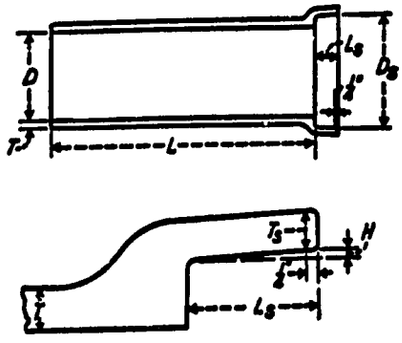

FIG. 1—Typical Bell and Spigot Joint Showing Application of Dimensions Given in Table 1.

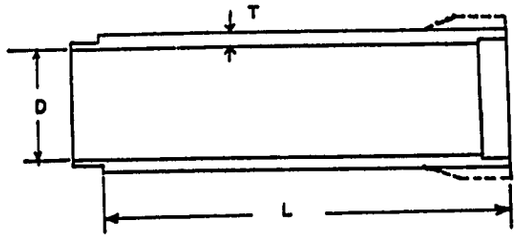

FIG. 2—Typical Tongue and Groove Joint Showing Modified Groove in Dotted Lines. (See Table 2, Notes *a* and *b*.)

6.3 *Permeability and Hydrostatic Tests:*

6.3.1 When subject to the permeability test as specified in AASHO T 33, Test for Determining Physical and Chemical Properties of Culvert Pipe, Sewer Pipe and Drain Tile, the outer pipe surface of not less than 80 per cent of the pipe tested shall show no moist or damp spots at the end of the test period due to water passing through the walls of the pipe.

6.3.2 If subjected to the internal hydrostatic pressures of 10 psi (0.70 kgf/cm²) for 10 min and as described in AASHO T 33, the pipe shall show no leakage. Moisture appearing on the surface of the pipe in the form of patches or beads adhering to the surface shall not be considered leakage.

6.3.3 At the time of initial inspection, under either the permeability or hydrostatic test, if the pipe shows moist or damp spots on the outer surface of the pipe, the test shall be continued for a period not to exceed 24 h at the option of the manufacturer or the seller. If the pipe shows no moist or damp spots on the outer surface of the pipe at some time during the extended period, it shall be considered to have passed the test.

6.3.4 When the hydrostatic test is used for acceptance of the pipe joint as specified in Section 8 of AASHO M 198 for Joints for Circular Concrete Sewer and Culvert Pipe, Using Flexible, Watertight, Rubber Gaskets, the same joint test runs may be used as the basis of acceptance for the pipe hydrostatic test allowed under 3.4 and 6.3.2 of these specifications.

DIMENSIONS AND PERMISSIBLE VARIATIONS

7.1 *Sizes and Dimensions.*—Pipe shall be furnished of the sizes, internal diameters, and dimensions prescribed in Tables 1, 2 and 3.

7.2 *Permissible Variations in Dimensions.*—The permissible variations from the dimensions prescribed in Tables 1 and 2 shall not exceed those stated in Table 3. This is not to be construed, however, that heavier wall thickness pipe cannot be furnished at the option of the manufacturer. Pipe intended to be straight shall not have variation in alignment of more than 1/8 in./ft (0.1 mm/cm) of length.

WORKMANSHIP AND FINISH

8.1 *Absence of Defects.*—Pipes shall be substantially free from fractures, large or deep cracks and blisters, laminations, and surface roughness.

8.2 *Finish of Ends.*—The planes of the ends of the pipe shall be perpendicular to the longitudinal axes, subject to limits of variation as shown in Table 3

8.3 *Joints:*

8.3.1 The ends of the pipe shall be so formed that when the pipe are laid together and joined, they will make a continuous uniform line of pipe with a smooth and regular interior surface. The joints shall be of such design as will permit effective jointing to reduce leakage and infiltration to a satisfactory minimum and to permit placement without appreciable irregularities in the flow line.

TABLE 3
Permissible Variations in Dimensions for Nonreinforced Concrete Pipe

Internal Diameter, In	Limits of Permissible Variation in				
	Length, (*L*) in./ft[a b] (−)	Length of Two Opposite Sides, in.	Internal Diameter, Pipe or Socket,[a] in. (±)	Depth of Socket, in.[a] (−)	Thickness of Wall, in.[a] (−)
1	2	3	4	5	6
4	1/16	1/4	1/16	1/16	1/16
6	1/16	1/4	3/16	1/4	1/16
8	1/16	5/16	1/4	1/4	1/16
10	1/16	3/8	1/4	1/4	1/16
12	1/16	3/8	1/4	1/4	1/16
15	1/16	7/16	1/2	1/4	1/16
18	1/16	1/2	1/4	1/4	3/32
21	1/16	9/16	5/16	1/4	3/32
24	1/16	9/16	5/16	1/4	1/8

[a] The minus sign (−) alone indicates that the plus variation is not limited, the plus and minus sign ± indicates variation in both excess and deficiency in dimension

[b] The maximum underrun in length of any section of pipe shall not exceed 1/2 in.

TABLE 3A
Metric Permissible Variations in Dimensions for Nonreinforced Concrete Pipe

NOTE.—This metric table is for use on a metric basis only and is not absolutely equal to U S customary unit systems.

Internal Diameter, cm (in.)	Limits of Permissible Variation, in.				
	Length (*L*), mm/cm[a] (−)	Length of Two Opposite Sides, mm	Internal Diameter, Pipe or Socket,[a] mm (±)	Depth of Socket, mm[a] (−)	Thickness of Wall, mm[a] (−)
1	2	3	4	5	6
10 (4)	0.21	6.4	3.2	3.2	1.6
15 (6)	0.21	6.4	4.8	6.4	1.6
10 (8)	0.21	7.9	6.4	6.4	1.6
25 (10)	0.21	9.5	6.4	6.4	1.6
31 (12)	0.21	9.5	6.4	6.4	1.6
38 (15)	0.21	11.1	6.4	6.4	2.4
46 (18)	0.21	12.7	6.4	6.4	2.4
53 (21)	0.21	14.3	7.9	6.4	3.2
61 (24)	0.31	14.3	7.9	6.4	3.2

[a] The minus sign (−) alone indicates that the plus variation is not limited; the plus and minus sign (±) indicates variation in both excess and deficiency in dimension.

8.3.2 Extra-strength nonreinforced concrete pipe under these specifications shall have bell-and-spigot, tongue-and-groove, or other approved type joint.

8.4 *Specials:*

8.4.1 Special shapes shall have the same joints and correspond in all respects with the dimensions specified for pipe of the corresponding class and internal diameter. Branches shall be furnished to lay the same lengths as straight pipe. All specials shall conform in finish to the specifications for pipes given in 8.1 and 8.2.

8.4.2 Slants shall have their spigot or tongue ends cut at an angle of approximately 45 deg with the longitudinal axis.

8.4.3 Curves shall be at angles of 90, 45, 22½ deg, as required. They shall conform substantially to the curvature specified.

8.4.4 Branches shall be furnished with the connection or connections of the size or sizes specified, securely and completely fastened in the process of manufacture to the wall of the pipe. T-branches and double T-branches shall have their axes perpendicular to the longitudinal axis of the pipe. Y-branches, double Y-branches, and V-branches shall have their axes approximately 45 deg from the longitudinal axis of the pipe measured from the socket or groove end. All branches shall terminate in sockets or grooves, and the branch shall be of sufficient length to permit making a proper joint when connecting pipe is inserted in the branch socket or groove.

8.4.5 Channel or split pipe, curves and branches shall be accurate half sections of the corresponding size of pipe or other specials.

8.5 *Repairs.*—Pipe may be repaired, if necessary, because of occasional inperfections in manufacture or injury during handling and will be acceptable if, in the opinion of the

9.1 All tests shall be made in accordance with AASHO T 33 Physical and Chemical Properties of Culvert Pipe, Sewer Pipe, and Drain Tile.

METHODS OF TEST

9.1 All tests shall be made in accordance with AASHO T 33 Physical and Chemical Properties of Culvert Pipe, Sewer Pipe, and Drain Tile.

9.2 *Test Specimens.*—The number of absorption test specimens shall be equal to the number of pipe provided for testing. The specimens shall be obtained from pipe that are acceptable as to strength, and shall be taken from pipe used in making the strength test after that test is made. The specimens shall be marked with the number or identification mark of the pipe from which they were taken. Each specimen shall have an area of 12 to 20 in.^{2} (77.4 to 129 cm^2), as measured on one surface of the pipe, and a thickness equal to the pipe wall, and shall be free from visible cracks.

9.3 *Permeability or Hydrostatic Test.*—Sound full-size pipe shall be tested for leakage under the permeability test or hydrostatic test. The number of pipe to be tested shall be as prescribed in 9.3.1 and 9.3.2.

9.3.1 *Permeability Test.*—Two per cent of the number of pipe of each size included in the order, but in no case less than five pipe.

9.3.2 *Hydrostatic Test*—One half of one per cent of the number of pipe of each size included in the order, but in no case less than two pipe.

MARKING

10.1 The following information shall be clearly marked on each pipe:

10.1.1 The pipe class.

10.1.2 The date of manufacture.

10.1.3 The name or trademark of the manufacturer.

10.1.4 Identification of the plant.

10.2 Markings shall be indented on the pipe or painted thereon with waterproof paint.

INSPECTION

11.1 Each length of pipe shall be subject to inspection at the factory, trench, or other point of delivery by a competent inspector employed by the purchaser. The purposes of the inspection shall be to cull and reject pipe that, independent of the physical tests herein specified, fail to conform to the requirements of these specifications.

REJECTION

12.1 Pipe shall be subject to rejection on account of failure to conform to any of the specification requirements. Individual sections of pipe may be rejected because of any of the following:

12.1.1 Variations in any dimension exceeding the permissible variations prescribed in Table 3.

12.1.2 Fractures or cracks passing through the wall or joints, except that a single crack not exceeding 2 in. (5.1 cm) in length at either end of a pipe or a single fracture in the joints not exceeding 3 in. (7.6 cm) in width nor 2 in. (5.1 cm) in length shall not be considered cause for rejection unless these defects exist in more than 5 per cent of the entire shipment or delivery.

12.1.3 Blisters where the surface is broken or which project more than ⅛ in. (3.2 mm) above the surface.

12.1.4 Defects that indicate imperfect mixing and molding.

12.1.5 Cracks sufficient to impair the strength, durability, or serviceability of the pipe.

12.1.6 Variation of more than ⅛ in./linear ft (0.1 mm/linear cm) of alignment of pipe intended to be straight.

12.1.7 Insecure attachment of branches on spurs

12.1.8 The complete absence of distinct web-like markings from the external surface of pipe made by any process in which the forms are removed immediately after the concrete has been placed, which is indicative of a deficiency of water in the concrete mix, unless all pipe submitted for test that do not have such web-like markings shall have passed the physical tests required by these specifications

———— o ————

Standard Specification for

Sewer and Manhole Brick (Made from Clay or Shale)

AASHO DESIGNATION: M 91–70
(ASTM DESIGNATION: C 32–69)

SCOPE

1.1 This specification covers brick made from clay or shale and burned, intended for use in (1) drainage structures for the conveyance of sewage, industrial wastes, and storm water, and (2) related structures such as manholes and catch basins.

1.1.1 Sewer Brick.

1.1.1.1 *Grade SS.*—Brick intended for use in structures requiring imperviousness and resistance to the action of sewage carrying large quantities of abrasive material at velocities exceeding 8 ft (2.4 m)/s.

1.1.1.2 *Grade SM.*—Brick intended for use in structures requiring imperviousness and resistance to the action of sewage carrying abrasive materials at velocities less than 8 ft (2.4 m)/s.

1.1.2 Manhole Brick.

1.1.2.1 *Grade MS.*—Brick intended for use in manholes and catch basins not requiring high degrees of imperviousness nor abrasive resistance but where a high and uniform degree of resistance to frost action and disintegration is needed when the brick may be frozen when permeated with water.

1.1.2.2 *Grade MM.*—Brick intended for use as manholes not requiring high degrees of imperviousness nor abrasive resistance but where a moderate and nonuniform degree of resistance to frost action and disintegration is needed when the brick may be permeated with water.

NOTE 1.—The values stated in U. S. customary standards are to be regarded as the standard. The metric equivalents of U. S. customary units may be approximate.

PHYSICAL REQUIREMENTS

2.1 Brick for sewer or drainage structures shall conform to the physical requirements for the specified Grades SS or SM as established in Table 1.

TABLE 1
Physical Properties

Designation	Minimum Compressive Strength, Average Gross Area, psi (kgf/cm²)		Maximum Water Absorption by 5-h Boiling, Percent	
	Av of 5 Brick	Individual	Av of 5 Brick	Individual
Sewer brick:				
Grade SS	8000 (560)	6000 (420)	6.0	9.0
Grade SM[a]	5000 (350)	3750 (263)	12.0	15.0
Manhole brick:				
Grade MS[a]	3000 (210)	2500 (175)	17.0	20.0
Grade MM[b]	2500 (175)	2200 (154)	22.0	25.0

[a] Where a high and uniform degree of resistance to frost action in the presence of moisture is required, Grades SM and MS shall conform to the additional requirement that the saturation coefficient (C/B), that is, ratio of absorption by 24-h submersion in cold water to that after 5-h submersion in boiling water, shall not exceed 0.80. If the average compressive strength is greater than 8000 psi or the average water absorption is less than 8.0 percent after 24-h submersion in cold water, the requirement for saturation coefficient shall be waived.

[b] Maximum saturation coefficient for Grade MM brick shall not exceed 0.90.

2.2 Brick for manholes, catch basins, and other related structures shall conform to the physical requirements for the specified Grades MS or MM as established in Table 1.

2.3 Unless otherwise specified by the purchaser, brick of Grade SS shall be accepted instead of Grade SM; also Grade MS shall be accepted instead of Grade MM.

2.4 Unless otherwise specified in the invitation for bids, brick shall be either solid or cored at the option of the seller. The net cross-sectional area of cored brick in any plane parallel to the bearing surface shall be at least 75 per cent of the gross cross-sectional area measured in the same plane. No part of any hole shall be less than ¾ in. (19 mm) from any edge of the brick.

DIMENSIONS AND PERMISSIBLE VARIATIONS

3.1 The size of the brick shall be specified by the purchaser, selecting any of the standard sizes of building brick.

3.2 For any lot of sewer brick furnished under this specification, not more than 2 percent of the brick shall vary from the nominal size requirements specified in 3.1 by more than ±⅛ in. (3 mm) in either transverse dimension, or by more than ±¼ in. (6 mm) in length.

INSPECTION

4.1 The brick, as delivered to the site, shall conform by visual inspection to the requirements specified by the purchaser or to the sample or samples approved as standard of comparison and to the samples passing the tests for physical requirements. Minor indentions and surface cracks incidental to the usual methods of manufacture, or the small chipping resulting from the customary methods of handling in shipment and delivery, should not be deemed grounds for rejection.

4.2 Brick shall be of rectangular cross section with substantially straight edges and square corners.

4.3 Kiln marks or depressions not exceeding 3/16 in. (5 mm) in depth shall be permitted on the backside of the brick.

FINISH AND APPEARANCE

5.1 Sewer brick shall have plain or smooth surfaces on both ends and on the face side.

5.2 Manhole brick shall have plain, slightly, or moderately textured surfaces.

SAMPLING AND TESTING

6.1 For test purposes brick that are representative of the commercial product shall be selected by a competent person appointed by the purchaser, the place or places of selection to be designated when the purchase order is placed. The manufacturer or the seller shall furnish specimens for tests without charge.

6.2 Brick shall be sampled and tested in accordance with AASHO T 32, Sampling and Testing Brick.

———— o ————

Standard Specification for

Wire Cloth Sieves for Testing Purposes

AASHO DESIGNATION: M 92–70

(ASTM DESIGNATION: E 11–70)

SCOPE

1.1 This specification covers sieves wherein a screening medium of woven-wire cloth is mounted in a frame for use in precision testing in the classification of materials according to particle size (Notes 1 to 4). Methods of checking and calibrating sieves are included as information in the Appendix.

NOTE 1—Some industries may possibly require more restrictive specifications for sieves for special testing purposes. Where such high precision is required, "Matched Sieves" have proven useful. "Matched Sieves" are selected for comparability to a set of "Master Sieves" by a sieving test of the particular material used by an industry. For further information on "Matched Sieves" and their sources, contact ASTM, 1916 Race Street, Philadelphia, Pa. 19103

NOTE 2—Complete instructions and procedures on the use of test sieves are contained in ASTM STP-447 Manual on Test Sieving Methods This manual also contains a list of all ASTM published standards on sieve analysis procedures for specific materials or industries.

NOTE 3—Attention is called to AASHO Method T 192, Test for Fineness of Hydraulic Cement by the No. 325 Sieve, which contains requirements for 2-in. (50-mm) diameter sieves used in the mineral industry, especially the cement group.

NOTE 4—For other types of sieves see ASTM E 323, for Perforated-Plate Sieves for Testing Purposes [1] and ASTM E 161, for Precision Electroformed Sieves.[1]

WIRE-CLOTH SIEVES

2.1 The openings of the wire cloth of successive standard sieves progress from a base of 1 mm in the ratio of approximately $\sqrt[4]{2:1}$. In selecting sieves from this series it is customary to take each sieve in a given range, every second sieve, or every fourth sieve.

2.2 Wire cloth for standard sieves shall be woven from brass, bronze, or other suitable wire with a plain weave, except that cloth with openings of 63 μm (No. 230) and finer may be woven with a twill weave. The wire shall not be coated or plated.

2.3 Wire cloth shall conform to the dimensional requirements of Table 1 The average opening (distance between parallel wires), both in the warp and shoot directions, measured separately, shall conform to the value in column 1, within the permissible variation in average opening given in column 4. The maximum individual opening shall not exceed the value given in column 6. Not more than 5 percent of the openings shall exceed the value given in column 5. The average diameter of the warp and of the shoot wires, taken separately, of the cloth of any sieve shall be that given in column 7, within the permissible range given in Footnote (a). All measurements of openings and wire diameters shall be made on the wire cloth mounted in the completed sieve.

2.4 Both the warp and shoot wires shall be crimped in such a manner that they will be rigid when in use.

2.5 There shall be no punctures or other obvious defects in the cloth.

FRAMES

3.1 *General Requirements.*—Frames for wire cloth sieves shall be constructed of non-corrosive material such as brass or stainless steel in such a manner as to be permanently rigid. Pans and covers shall be so made as to nest with the sieves. The wire cloth shall be mounted on the frame without distortion, looseness, or waviness To prevent the material being sieved from catching in the joint between the wire cloth and the frame,

[1] 1968 Book of ASTM Standards, Part 30.

the joint shall be smoothly filled with solder or so made that the material will not be trapped.

3.2 *Standard Frames.*—The standard sieve frame shall be circular, 8 in. (203 mm) in diameter, of seamless construction. The permissible variation on the mean inside diameter 0.2 in. (5 mm) below the top of the frame shall be ± 0.03 in. (0.8 mm). The bottom of the frame or "sieve skirt" shall be so constructed as to have an easy sliding fit in any sieve conforming to the above permissible variation, and in no case shall this outside diameter be less than 7.970 in. (202.44 mm) nor more than 8.000 in. (203.20 mm). The height of the sieve from the top of the frame to the wire cloth surface shall be either 2 in. (50 mm), designated as full-height, or 1 in. (25 mm), designated as half-height. The joint or fillet shall be so constructed as to allow a minimum clear sieving surface 7½ in. (190 mm) in diameter.

3.3 *Non-Standard Frames.*—Frames of sieves having nominal openings of less than 25 mm but greater than 4.00 mm may be either of the standard size or of larger dimensions as may be specified in individual cases. Frames of sieves having nominal openings of 25 mm or more should be larger than the standard size. The use of special size and shape frames for special purposes is not precluded. For some purposes, sieve frames larger than the standard size may be either square, rectangular, or circular, and for nominal openings 37 mm and coarser may be made of metal or hardwood. The use of special size and shape frames, however, should be discouraged where the standard frames could be used, because the results are not necessarily comparable.

3.4 *Three-Inch Sieves.*—Frames 3 in. (76 mm) inside diameter should not be used for sieves with openings larger than 150 μm (No. 100). The tolerances on the diameter of the sieve frames shall be the same as for the standard size covered in paragraph 3.2. The depth of the sieve from the top of the frame to the cloth shall normally be 1.25 in. (32 mm), but not less than 0.75 in. (19 mm).

LABEL MARKING

4.1 Each sieve shall bear a label marked with the following information:

(a) U.S.A. Standard Sieve
(b) ASTM Designation E-11 or AASHO Designation M 92
(c) Standard Sieve Designation from Table 1, Column 1
(d) Name of Manufacturer or Distributor
(e) Optional—Alternate sieve designation (From Table 1, Column 2)

APPENDIX

A1. Methods of Checking Wire—Cloth Sieves to Determine Whether or Not They Conform to Specifications.

A1.1 Except for the very coarse sieves, the most reliable method of determining the average opening is to calculate it from the value obtained for the average diameter of the wires and the number of wires per unit of length. The value for the average diameter of the wires is obtained by measuring 5 to 10 wires that are evenly spaced across the sieve. The number of measurements depends upon the uniformity of the wire and the closeness of the measurements to the limits permitted. All measurements must be made in both the warp and shoot directions and considered separately.

A1.2 Sieves 125 to 11.2 mm: Measure 1 to 5 openings and wires with a vernier caliper or flat "go", "no-go" gauges.

A1.3 Sieves 13.2 to 3.35 mm: Determine the mesh by measuring the distance occupied by at least 10 openings and 10 wires and measure the diameter of at least 5 wires. Use a measuring microscope (linear comparator) with an 80-mm objective lens in the microscope*

A1.4 Sieves 4.0 to 2.0-mm: Determine the average opening and wire diameter in the same manner as in A1.3 except that a 67-mm objective lens is used in the microscope.*

A1.5 Sieves 2.8 to 1.0-mm: Same as in A1.3 except that a 60-mm objective lens is used in the microscope.*

A1.6 Sieves 850 to 425-μm: Determine the mesh by means of the "Moire effect" and measure the diameter of at least 5 wires with a microscope * fitted wih a split-image eyepiece and a 48-mm objective lens.

A1.7 Sieve 425 to 106-μm: Same as in A1.6 except that the microscope * should be fitted with a 32-mm objective lens.

A1.8 Sieve 125 to 38-μm: Same as in A1.6 except that the microscope * should be fitted with a 16-mm objective lens.

A1.9 Determine the maximum openings and the number of openings larger than the intermediate permissible variation in both the warp and shoot directions. Make measurements with the same devices used to measure wire diameters. Use a mechanism to hold the sieve and slowly move it under the microscope for a distance of at least 15 cm. Scan the openings along a diameter of the sieve and measure excessively large openings. If the openings are larger than the intermediate permissible variation they should be counted and the percentage calculated.

A1.10 Measurements needed in Sections A1.6 through A1.9 can also be made with projection equipment having suitable magnification.

A1.11 With round "go", "no-go" gauges check the dimension of the frames.

A1.12 Determine the magnification of optical devices with calibrated stage micrometers.

A1.13 Determine the mesh count by means of the "Moire effect", also known as "picket-fence interference", with accurately graduated glass scales.[2] For the 75 μm sieve, for instance, a glass scale with approximately 200 lines to the inch is used. The opaque lines are about equal in width to the space between the lines and must be uniformly spaced. When a scale such as this is laid on woven wire cloth having a mesh per unit length approximating the number of lines per unit length on the scale, and a strong light is placed beneath, dark bands will appear which in a unit length are equal in number to the difference between the mesh of the cloth and the graduation of the scale. If the scale is moved lengthwise, in a direction perpendicular to the lines, the dark bands will also move. If these bands move in the same direction as the motion of the scale, the mesh of the sieve is less, if the motion is in the opposite direction, the mesh is greater than the number of lines on the scale. If some bands move in one direction and some in the other, the number moving in each direction must be counted separately, and the algebraic sum taken as the number of bands. For sieves 850 μm (No. 20) to 212 μm (No. 70) inclusive, the best results are obtained with a transparent line about the width of a wire diameter ruled on an opaque background. For sieves coarser than these it is usually necessary to count the wires by the aid of a hand lens, using a steel scale as the standard. Scales should be calibrated before being used in testing sieves.

A1.14 The National Bureau of Standards accepts wire-cloth sieves 5.6 mm and finer for test to determine conformity to specifications.

A2. *Methods of Calibrating Wire-Cloth Sieves.*

A2.1 A wire-cloth sieve may be calibrated by plotting the frequency of occurrence of the size of the openings as indicated in the following procedure: Six fields are chosen in such a manner that one of the openings to be measured will have common wires. In each field the openings to be measured should lie in a diagonal direction across the sieve (see Fig. 1). The openings in three of the fields should lie in a direction at right angles to those in the other three fields. Measure at least 50 openings in each field. Measure each opening between the warp wires and the shoot wires and separately tabulate and plot the readings.

A2.2 For routine checking of sieves and for determining the effective sieve opening a method employing glass spheres is recommended. These glass spheres should not be used to determine conformity to specifications. Glass spheres for sieve calibration may be obtained from the Supply Division, National Bureau of Standards, Washington, D. C. 20234. Four of these standard reference materials are now available: SRM 1019a for calibrating sieves No. 8-35; SRM 1018a for calibrating sieves No. 20-70; SRM 1017a for calibrating sieves No. 50-170; and SRM 1004 for calibrating sieves No. 140-400. Detailed instructions for the use of the glass spheres for calibrating sieves are furnished with each sample.

---

[2] Glass scales can be obtained from the W. S. Tyler Co., Mentor, Ohio 44060.

* These microscopes should have a tube length of about 160 mm and a 10X eyepiece

TABLE 1
Nominal Dimensions, Permissible Variations for Wire Cloth of Standard Test Sieves (U. S. A. Standard Series)

Sieve Designation		Nominal Sieve Opening[a] inches	Permissible Variation of Average Opening from the Standard Sieve Designation mm	Maximum Opening Size for not more than 5 per cent of openings mm	Maximum Individual Opening mm	Nominal Wire Diameter[a] mm
Standard[b] mm	Alternate					
(1)	(2)	(3)	(4)	(5)	(6)	(7)
125	5. in.	5.	± 3.7	130.0	130.9	8.0
106	4.24 in.	4.24	3.2	110.2	111.1	6.40
100	4. in.[d]	4.	3.0	104.0	104.8	6.30
90	3½ in	3.5	2.7	93.6	94.4	6.08
75	3. in.	3.	2.2	78.1	78.7	5.80
63	2½ in.	2.5	1.9	65.6	66.2	5.50
53	2.12 in.	2.12	1.6	55.2	55.7	5.15
50	2. in.[d]	2.	1.5	52.1	52.6	5.05
45	1¾ in.	1.75	1.4	46.9	47.4	4.85
37.5	1½ in.	1.5	1.1	39.1	39.5	4.59
31.5	1¼ in.	1.25	1.0	32.9	33.2	4.23
26.5	1.06 in.	1.06	0.8	27.7	28.0	3.90
25.0	1. in.[d]	1.	0.8	26.1	26.4	3.80
22.4	⅞ in.	0.875	0.7	23.4	23.7	3.50
19.0	¾ in.	0.750	0.6	19.9	20.1	3.30
16.0	⅝ in.	0.625	0.5	16.7	17.0	3.00
13.2	.530 in.	0.530	0.41	13.83	14.05	2.75
12.5	½ in.[d]	0.500	0.39	13.10	13.31	2.67
11.2	7/16 in.	0.438	0.35	11.75	11.94	2.45
9.5	⅜ in.	0.375	0.30	9.97	10.16	2.27
8.0	5/16 in.	0.312	0.25	8.41	8.58	2.07
6.7	.265 in.	0.265	0.21	7.05	7.20	1.87
6.3	¼ in.[d]	0.250	0.20	6.64	6.78	1.82
5.6	No. 3½[e]	0.223	0.18	5.90	6.04	1.68
4.75	No 4	0.187	0.15	5.02	5.14	1.54
4.00	No. 5	0.157	0.13	4.23	4.35	1.37
3.35	No. 6	0.132	0.11	3.55	3.66	1.23
2.80	No. 7	0.111	0.095	2.975	3.070	1.10
2.36	No. 8	0.093	0.080	2.515	2.600	1.00
2.00	No. 10	0.078	0.070	2.135	2.215	0.900
1.70	No. 12[e]	0.0661	± 0.060	1.820	1.890	0.810
1.40	No. 14	0.0555	0.050	1.505	1.565	0.725
1.18	No. 16	0.0469	0.045	1.270	1.330	0.650
1.00	No. 18	0.0394	0.040	1.080	1.135	0.580
0.850	No. 20	0.0331	0.035	0.925	0.970	0.510
0.710	No. 25	0.0278	0.030	0.775	0.815	0.450
0.600	No. 30	0.0234	0.025	0.660	0.695	0.390
0.500	No. 35	0.0197	0.020	0.550	0.585	0.340
0.425	No. 40	0.0165	0.019	0.471	0.502	0.290
0.355	No. 45	0.0139	0.016	0.396	0.425	0.247
0.300	No. 50	0.0117	0.014	0.337	0.363	0.215
0.250	No. 60	0.0098	0.012	0.283	0.306	0.180
0.212	No. 70	0.0083	0.010	0.242	0.263	0.152
0.180	No. 80	0.0070	0.009	0.207	0.227	0.131
0.150	No. 100	0.0059	0.008	0.174	0.192	0.110
0.125	No. 120	0.0049	0.007	0.147	0.163	0.091
0.106	No 140	0.0041	0.006	0.126	0.141	0.076
0.090	No. 170	0.0035	0.005	0.108	0.122	0.064
0.075	No 200	0.0029	0.005	0.091	0.103	0.053
0.063	No. 230	0.0025	0.004	0.077	0.089	0.044
0.053	No. 270	0.0021	0.004	0.066	0.076	0.037
0.045	No. 325	0.0017	0.003	0.057	0.066	0.030
0.038	No. 400	0.0015	0.003	0.048	0.057	0.025

[a] The average diameter of the warp and of the shoot wires, taken separately, of the cloth of any sieve shall not deviate from the nominal values by more than the following:

Sieves coarser than 0.600 mm	5 per cent
Sieves 0.600 to 0.125 mm	7½ per cent
Sieves finer than 0.125 mm	10 per cent

[b] These standard designations correspond to the values for test sieve apertures recommended by the International Standards Organization, Geneva, Switzerland.

[c] Only approximately equivalent to the metric values in Column 1.

[d] These sieves are not in the standard series but they have been included because they are in common usage.

[e] These numbers (3½ to 400) are the approximate number of openings per linear inch but it is preferred that the sieve be identified by the standard designation in millimeters.

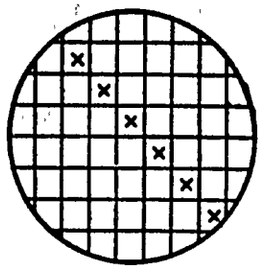

Only the indicated openings are measured.

FIG. 1—*Method of Selecting Openings for Plotting of Different Sizes of Openings (see Section A4).*

———— o ————

Standard Specification for

Air-Entraining Portland Cement

AASHO DESIGNATION: M 134–70

SCOPE

1.1 This specification covers three types of air-entraining Portland cement for use where air entrainment is desired, as follows:

Type IA.—For use in general concrete construction when the special properties specified for Types IIA and IIIA are not required.

Type IIA.—For use in general concrete construction exposed to moderate sulphate action or where moderate heat of hydration is required.

Type IIIA.—For use when high-early-strength is required.

BASIS OF PURCHASE

2.1 The purchaser shall specify the type or types desired. When no type is specified, the requirements of type IA shall govern.

DEFINITION

3.1 Air-entraining portland cement is the product obtained by pulverizing clinker consisting essentially of hydraulic calcium silicates, to which no additions have been made

subsequent to calcination other than water and/or untreated calcium sulfate, except that an air-entraining addition as specified in Section 4 shall be interground with the clinker and additions of other nondeleterious materials may be added at the option of the manufacturer in an amount not to exceed 0.1 percent.

AIR-ENTRAINING ADDITION

4.1 The air-entraining addition interground with this cement shall be capable of forming an air-void system in cement paste which will provide adequate resistance to the destructive effects of natural freezing and thawing. At the request of the purchaser, the manufacturer shall furnish test data acceptable to the purchaser showing that the air-entraining addition used in this cement does impart satisfactory durability to concrete. Test data shall be considered as demonstrating satisfactory performance in this respect if it shows that air-entraining portland cement containing this addition and meeting the requirements of this specification produced concrete having a durability factor of not less than 80 when tested in accordance with the Method of Test for Evaluation by Freezing and Thawing of Air-Entraining Additions to Portland Cement, AASHO T 188.

CHEMICAL REQUIREMENTS

5.1 Air-entraining Portland cements shall conform to the respective chemical requirements prescribed in Table 1.

PHYSICAL REQUIREMENTS

6.1 Air-entraining portland cements shall conform to the respective physical requirements prescribed in Table 2.

PACKAGING AND MARKING

7.1 When cement is delivered in packages, the name and brand of the manufacturer, and the type under this specification shall be plainly inidicated thereon. Similar information shall be provided in the shipping advices accompanying the shipment of packaged or bulk cement. The manufacturer, upon request, shall furnish the purchaser with the identity of the air-entraining addition used. A bag shall contain 94 lb. net. A barrel shall consist of 376 lb. net. All packages shall be in good condition at the time of inspection.

STORAGE

8.1 The cement shall be stored in such a manner as to permit easy access for proper inspection and identification of each shipment, and in a suitable weathertight building that will protect the cement from dampness and minimize warehouse set.

INSPECTION

9.1 Every facility shall be provided the purchaser for careful sampling and inspection, either at the mill or at the site of the work, as may be specified by the purchaser. The following periods from time of sampling shall be allowed for completion of testing:

1-day test	6 days
3-day test	8 days
7-day test	12 days
28-day test	33 days

M 134

TABLE 1

Chemical Requirements

	Type IA	Type IIA	Type IIIA
Silicon dioxide (SiO_2) min, per cent	..	21.0	...
Aluminum oxide (Al_2O_3) max. per cent	..	6.0	...
Ferric oxide (Fe_2O_3) max. per cent	..	6.0	...
Magnesium oxide (MgO) max. per cent	5.0	5.0	5.0
Sulfur trioxide (SO_3)			
When $3CaO \cdot Al_2O_3$ is 8 percent or less, max. per cent	3.0	3.0	3.5
When $3CaO \cdot Al_2O_3$ is more than 8 percent, max. per cent	3.5		4.5
Loss on ignition, max. per cent	3.0	3.0	3.0
Insoluble residue, max per cent	0.75	0.75	0.75
Sodium and potassium oxide ($Na_2O + 0.658\ K_2O$) max per cent (1)	0.60	0.60	0.60
Tricalcium silicate ($3CaO \cdot SiO_2$) max per cent (2)		55 (4)	
Tricalcium aluminate ($3CaO \cdot Al_2O_3$) max. per cent (2)	15	8	15 (3)

(1) This requirement applies only when the Engineer specifies "low-alkali cement." Such cements should be specified only when alkali reactive aggregates are to be used in the concrete. The maximum value of 0.60 per cent may be reduced when the experience of the Engineer indicates that such action is desirable.

(2) The expressing of chemical limitations by means of calculated assumed compounds does not necessarily mean that the oxides are actually or entirely present as such compounds.

When the ratio of percentages of aluminum oxide to ferric oxide is 0.64 or more, the percentages of tricalcium silicate and tricalcium aluminate shall be calculated from the chemical analysis as follows

Tricalcium silicate = (4.071 × percent CaO) − (7.600 × percent SiO_2) − (6.718 × percent Al_2O_3) − (1.430 × percent Fe_2O_3) − (2.852 × percent SO_3)

Tricalcium aluminate = (2.650 × percent Al_2O_3) − (1.692 × percent Fe_2O_3)

When the alumina-ferric oxide ratio is less than 0.64, no tricalcium aluminate is formed and tricalcium silicate shall be calculated by the following formula

Tricalcium silicate = (4.071 × per cent CaO) − (7.600 × per cent SiO_2) − (4.479 × per cent Al_2O_3) − (2.859 × per cent Fe_2O_3) − (2.852 × per cent SO_3)

In the calculation of C_3A, values of Al_2O_3 and Fe_2O_3 expressed to the nearest 0.01 per cent shall be used. For other compounds, oxide determinations calculated to the nearest 0.1 per cent shall be used. Compound percentages shall be calculated to the nearest 0.1 per cent and reported to the nearest 1 per cent.

(3) When moderate sulfate resistance is required for type IIIA cement, tricalcium aluminate shall be limited to 8 per cent. When high sulfate resistance is required, the tricalcium aluminate shall be limited to 5 per cent.

(4) When moderate heat of hydration is required, a limit of 58 per cent on the total tricalcium silicate and tricalcium aluminate shall apply for type IIA cement.

REJECTION

10.1 The cement may be rejected if it fails to meet any of the requirements of this specification.

10.2 Cement remaining in bulk storage at the mill, prior to shipment, for a period greater than 6 months after completion of the tests may be retested and may be rejected if it fails to conform to any of the requirements of this specification.

10.3 Packages varying more than 5 per cent from the specified weight may be rejected; and if the average weight of packages in any shipment, as shown by weighing 50 packages taken at random, is less than that specified, the entire shipment may be rejected.

10.4 Cement failing to meet the test for soundness in the autoclave may be accepted if it passes a retest, using a new sample, at any time within 28 days thereafter. The provisional acceptance of the cement at the mill shall not deprive the purchaser of the right to reject on a retest of soundness at the time of delivery of the cement to the purchaser

M 134

TABLE 2

Physical Requirements

	Type IA	Type IIA	Type IIIA
Fineness, specific surface, sq. cm. per g. (alternate methods) (1):			
Turbidimeter test:			
Average value, min.	1,600	1,600	....
Min. value, any one sample	1,500	1,500	....
Average value, max.	2,200	2,200	....
Max. value any one sample	2,300	2,300	....
Air permeability test.			
Average value, min.	2,800	2,800	....
Min. value, any one sample	2,600	2,600	....
Average value, max.	4,000	4,000	....
Max. value, any one sample	4,200	4,200	....
Soundness:			
Autoclave expansion, max., per cent	0.50	0.50	0.50
Time of setting (alternate methods) (2):			
Gillmore test.			
Initial set, min., not less than	60	60	60
Final set, hr., not more than	10	10	10
Vicat test (T 131):			
Set, min., not less than	45	45	45
Air content of mortar, prepared and tested in accordance with Method T 137, per cent by volume	19 ± 3	19 ± 3	19 ± 3
Tensile strength, psi. (3).			
The average tensile strength of not less than three standard mortar briquettes, prepared in accordance with Method T 132, shall be equal or higher than the values specified for the ages indicated below:			
1 day in moist air	....	....	275
1 day in moist air, 2 days in water	150	125	375
1 day in moist air, 6 days in water	275	250	(3)
1 day in moist air, 27 days in water	350	325	....
Compressive strength, psi. (3).			
The compressive strength of mortar cubes, composed of 1 part cement and 2.75 parts graded standard sand, by weight, prepared and tested in accordance with Method T 106, shall be equal to or higher than the values specified for the ages indicated below:			
1 day in moist air	....	....	1,300
1 day in moist air, 2 days in water	900	750	2,500
1 day in moist air, 6 days in water	1,500	1,400	....
1 day in moist air, 27 days in water	2,800	2,800	....
False set, final penetration, min., per cent (4)	50	50	50

(1) Either of the two alternate fineness methods may be used at the option of the testing laboratory. However, in case of dispute, or when the sample fails to meet the requirements of the Blaine meter, the Wagner turbidimeter shall be used, and the requirements in Table 2 for this method shall govern.

(2) The purchaser should specify the type of setting time test required. In case he does not so specify, or in the case of dispute, the requirements of the Vicat test only shall govern.

(3) The purchaser shall specify the type of strength test desired. In case he does not so specify the requirements of the compressive strength test only shall govern. Unless otherwise specified the strength tests for Types IA and IIA cement will be made only at 3 and 7 days. The strength at any age shall be higher than the strength of the next preceding age.

(4) This requirement applies only when specifically requested.

METHODS OF SAMPLING AND TESTING

11.1 The sampling and testing of air-entraining portland cement shall be in accordance with the following standard methods of the American Association of State Highway Officials:

Sampling	T 127
Chemical analysis	T 105

NOTE: Sodium and potassium oxides may be determined by either the flame photometry method outlined in T 105, Part II, or the gravimetric method outlined in T 105, Part I.

Fineness:	
Turbidimeter	T 98
Air permeability	T 153
Soundness	T 107
Time of setting:	
Vicat	T 131
Gillmore	T 154
Normal consistency	T 129
Tensile strength	T 132
Compressive strength	T 106
Air content	T 137
False set	T 186

———— o ————

Standard Specification for

Natural Cement

AASHO DESIGNATION: M 135–62

SCOPE

1.1 This specification covers two types of natural cement as follows:

Type N.—Natural cement for use with portland cement in general concrete construction.

Type NA.—Air-entraining natural cement for the same uses as type N.

BASIS OF PURCHASE

2.1 The purchaser shall specify the type of cement desired.

DEFINITION

3.1 For the purpose of this specification, natural cement is the product obtained by finely pulverizing calcined argillaceous limestone. The temperature of calcination shall be no higher than is necessary to drive off carbonic acid gas.

ADDITIONS DURING GRINDING

4.1 *Water* or untreated calcium sulfate, or both, may be used. At the option of the manufacturer, nondeleterious materials other than water, or calcium sulfate, or both, may be used as grinding aids in a total amount not in excess of 0.1 percent

4.2 *Air-Entraining Addition.*—The manufacturer shall inform the purchaser as to the identity of the air-entraining addition to be used in Type NA cement The air-entraining addition interground with this cement shall be capable of forming an air void system in cement paste which will provide adequate resistance to the destructive effects of natural freezing and thawing. At the request of the purchaser, the manufacturer shall furnish test data acceptable to the purchaser showing that the air-entraining addition used in this cement does impart satisfactory durability to concrete. Test data shall be considered as demonstrating satisfactory performance in this respect if they show that air-entraining portland cement containing this addition and meeting the requirements of the Specifications for Air-Entraining Portland Cement, AASHO: M 134, produced concrete having a durability factor of not less than 80 when tested in accordance with the Method of Test for Evaluation by Freezing and Thawing of Air-Entraining Additions to Portland Cement, AASHO: T 188.

4.3 *Calcium Chloride.*—When authorized by the purchaser, calcium chloride in an amount not to exceed 2 per cent by weight of the natural cement may be interground with the cement to aid development of early strength of the concrete.

CHEMICAL REQUIREMENTS

5.1 The ignition loss shall not exceed 12 per cent.

5.2 The insoluble residue shall be not less than 2 per cent.

PHYSICAL REQUIREMENTS

6.1 Natural cements shall conform to the respective physical requirements prescribed in Table 1.

6.2 The cement used is preparing the test specimens for normal consistency, time of setting, autoclave expansion, strength and air-entrainment tests shall be a blend of 25 per cent by weight of the natural cement being tested and 75 per cent by weight of portland cement conforming to the requirements for type II cement in the Specification for Portland Cement (AASHO M 85), unless otherwise specified by the purchaser. The

M 135
TABLE 1
Physical Requirements

	Type N	Type NA
Fineness, specific surface, sq. cm. per g:		
Air permeability apparatus	.....	.....
Average value, min	6000	6000
Minimum value, any one sample	5500	5500
Soundness:		
Autoclave expansion, max, per cent	0.50	0.50
Time of setting, Gillmore test.		
Initial time in minutes, min	60	60
Final, time in hours, max	12	12
Air entrainment:		
No agent used, max, per cent by volume	12	.....
Using air-entraining agent, per cent by volume	.....	19 ± 3
Compressive strength, min. per cent of control.[1]		
1 day in moist air, 6 days in water	85	70
1 day in moist air, 27 days in water	85	70

[1] See Sec. 9.7.

natural cement and the portland cement shall be dry mixed to a uniform blend before water is added.

ACCEPTANCE AND REJECTION

7.1 Natural cement may be accepted on the basis of 7-day tests. If the natural cement fails to pass 7-day strength requirements, the cement may be accepted on the basis of 28-day strength tests.

7.2 Cement failing to meet the initial test for autoclave soundness may be accepted if it passes a retest on a second and third series of test specimens.

7.3 The cement shall be rejected if it fails to meet any of the requirements of the specification subject to specific modification by the purchaser or to the modifications indicated herein, or both.

7.4 Cement remaining in storage for a period longer than six months after test may be retested and shall be rejected if it fails to meet any of the requirements of this specification at that time.

7.5 Tentative or provisional acceptance of the cement shall not deprive the purchaser of the right of rejection in the event final tests or retests fail to meet applicable requirements.

PACKAGING AND MARKING

8.1 When cement is delivered in packages, the name and brand of the manufacturer and the type of natural cement contained, as defined under these specifications, shall be plainly indicated thereon. Similar information shall be provided in the shipping advices accompanying the shipment of packaged or bulk cement. A bag shall contain 85 lb. net. A barrel shall consist of 340 lb. net. All packages shall be in good condition at the time of inspection.

8.2 Packages varying more than 5 per cent from the specified weight may be rejected. If the average weight of packages in any shipment, as shown by weighing 50 packages taken at random, is less than that specified, the entire shipment may be rejected.

METHODS OF SAMPLING AND TESTING

9.1 The cement shall be sampled and tested in accordance with the following methods of the American Association of State Highway Officials:

Sampling.—T 127.

Chemical Analysis.—T 105 (Part I), (Sections 20 and 28).

Fineness.—T 153. (In this fineness determination the specific gravity of natural cement shall be considered to be 2.90. Tests shall be made at a porosity of 0.530. In case of dispute, the true specific gravity shall be used as determined by the Standard Method of Test for Specific Gravity of Hydraulic Cement (AASHO T 133)).

Autoclave Expansion.—T 107 (except that for the purposes of this test, the autoclave expansion of the natural cement shall be taken as the difference between the autoclave expansion of specimens prepared from the blend described in Section 6.2), and that of specimens prepared from the portland cement used in the blend.)

Time of Setting.—T 131.

Air Content of Mortar.—T 137.

Compressive Strength.—T 106 (The compressive strength of specimens prepared from the natural cement blend described in Section 6.2 shall be calculated as a percentage of the strength of control specimens at the same ages prepared from the portland cement used in the blend as follows:

$$\text{Compressive Strength of blend, percentage of control} = \frac{A}{B} \times 100$$

where:

A = average compressive strength of specimens prepared with blend, and

B = average compressive strength of specimens prepared with portland cement.)

———— o ————

Standard Specification for

Copper Sheet, Strip, Plate and Rolled Bar

AASHO DESIGNATION: M 138–68

(ASTM DESIGNATION: B 152–68)

SCOPE

1.1 This specification covers copper sheet, strip, plate, and rolled bar. Various coppers are covered as follows:

Copper No.[a]	Previously Used Designation[1]	Type of Copper
102[2]	OF	Oxygen-free without residual deoxidants
104, 105, 107	OFS	Oxygen-free-silver bearing
109		Boron-deoxidized high-conductivity (BDHC)
110[2]	ETP	Electrolytic tough pitch
113, 114, 116[2]	STP	Silver bearing tough pitch
122[2]	DHP	Phosphorized, high residual phosphorus
123	DPS	Phosphorized, silver bearing
125	FRTP	Fire-refined tough pitch
141	ATP	Arsenical, tough pitch

[a] When no particular copper is specified, any one of the above may be supplied.

NOTE 1.—Copper No. 104, 105, 107, 113, 114, and 116 identify coppers with specific silver content (see Table 1). Such material is covered by Specification for Copper Strip for Building Construction (ASTM B 370).

NOTE 2.—This specification is not intended to cover material rolled to ounce-weight thicknesses. Plates for locomotive fireboxes are covered by the Specification for Copper Plates for Locomotive Fireboxes (ASTM B 11).

GENERAL REQUIREMENTS

2.1 Material furnished under this specification shall conform to the applicable requirements of the current edition of the Specification for General Requirements for Wrought Copper and Copper-Alloy Plate, Sheet, Strip, and Rolled Bar ASTM B 248).

BASIS OF PURCHASE

3.1 Orders for material under this specification shall include the following information:

(1) Copper No. (Section 1). When types 104, 105, 107, 113, 114, 116, or 123, the

[1] Except for boron-deoxidized high-conductivity (BCHC) copper, these types of copper are classified in the ASTM B 224, Classification of Coppers.

[2] SAE Specification CA 102 conforms to the requirements for Copper No. 102. SAE Specification CA 110 conforms to the requirements for Copper No. 110; SAE Specification CA 113, CA 114, and CA 116 conform to the requirements for Copper Nos. 113, 114, and 116; and SAE Specification CA 122 conforms to the requirements for Copper No. 122.

TABLE 1
Chemical Composition

	Composition													
	Copper No.													
	102	[illegible]	105	107	109		110	113	114	116	122	123	125	141
	per cent	per cent	per cent	per cent	ppm	per cent	per cent	per cent	per cent	per cent	per cent	per cent	per cent	per cent
Copper + silver, min	99.95	[illegible]	99.95	99.95		99.99[a]	99.90	99.90	99.90	99.90	99.90	99.90	99.88	99.40
Boron	...					0.005–0.015	...	...	...	...	...	...	...	...
Cadmium, max	...	...		...	3	0.0003	...	...	...	...	...	...	...	...
Phosphorus	...	...	...	...	[illegible] max	0.0005 max		...	...	...	0.015–0.040	0.040 max	...	...
Sulfur, max	...	...	...	...	15	0.0015	...	...	...	...	...	...	...	...
Zinc, max	...	...	...	...	5	0.0005	...	...	...	...	...	...	...	...
Mercury, max	...	...	...	...	1	0.0001	...	...	...	...	...	...	...	...
Lead, max		...	...	...	10	0.0010	...	...	...	...	...	...	0.004	...
Arsenic	...	...	...	...	[b]	[b]	...	...	...	...	...	...	0.012 max	0.15 0.50
Silver, min	...	8[c]	10[c]	25[c]	[a]	[a]	...	8[c]	10[c]	25[c]	...	4[c]	...	...
Antimony, max	...		...		[b]	[b]	...	...	...	...	...	...	0.003	...
Selenium + tellurium, max	...	...	...	...		[b]	...	...	...	...	...	...	0.025	...
Nickel, max	...	...	...	...	...	...	...	...	...	...	...	...	0.05	...
Bismuth, max	...	...		...	[b]	[b]	...	...	...	...	...	...	0.003	...

[a] Copper + silver + boron. Copper shall be determined by taking the difference between 100 per cent and boron plus the impurity total. "Impurity total" is defined as the sum of silver, sulfur, lead, tin, bismuth, arsenic, antimony, iron, nickel, mercury, zinc, phosphorus, selenium, tellurium, manganese, cadmium, and oxygen.

[b] The sum of antimony, arsenic, bismuth, manganese, selenium, tellurium, and tin contents shall not exceed 0.0040 per cent or 40 ppm.

[c] These values are for ounces per ton. Silver-bearing copper may be either Lake copper or produced from types Copper No. 102, 110, or 122 by the addition of the required amount of silver. The silver content is normally specified in troy ounces per avoirdupois ton (1 oz per ton is equivalent to 0.0034 per cent). The desired minimum silver content must be specified.

If the type of silver-bearing copper is not specified (that is, whether tough pitch, phosphorized, or oxygen-free) any one of the three types may be supplied at the option of the manufacturer.

amount of silver in ounces per ton,

(2) Temper (Sections 5, 6, 7),

(3) Dimensions: thickness, width, and weight (Section 14.2, 14.3 and 14.6),

(4) Whether the resistivity test is required for either Copper No. 102, 109, or 110 (Section 13),

(5) Embrittlement test (Section 12),

(6) How furnished: flat or rolls,

(7) Length (Section 14.4), and

(8) Weight: total for each size, and also weights per roll of special sizes of roll.

CHEMICAL COMPOSITION

4.1 The material shall conform to the requirements as to chemical composition prescribed in Table 1.

TEMPERS OF COLD-ROLLED SHEET, STRIP, PLATE, AND ROLLED BAR

5.1 The standard tempers of cold-rolled sheet, strip, plate, and rolled bar copper of all types shall be designated as follows:

Light cold-rolled
Half-hard[a]
Hard[a]
Spring[a]
Extra-spring[a]

[a] Commonly supplied only in strip. The manufacturer should be consulted where these tempers are desired as sheet, plate, or rolled bar.

Special or non-standard tempers are subject to negotiation between manufacturer and purchaser (Section 3.1 (2)).

TEMPERS OF COLD-ROLLED ANNEALED SHEET AND STRIP

6.1 The standard tempers of cold-rolled annealed copper sheet and strip shall be designated as follows:

Soft anneal, and Deep-drawing anneal

Special or non-standard tempers are subject to negotiation between manufacturer and purchaser.

NOTE.—Soft anneal temper is suitable for most industrial uses of copper such as forming, spinning, and simple drawing operations where close control of temper is not essential. Deep-drawing anneal temper is especially suited for very severe drawing and forming operations where maximum ductility and close control of temper is required

TEMPERS OF HOT-ROLLED SHEET AND PLATE

7.1 The temper of hot-rolled copper sheet and plate shall be that produced by hot-rolling. The temper of hot-rolled and annealed copper sheet and plate shall be that produced by hot-rolling and subsequent annealing.

TENSILE PROPERTIES OF COLD AND HOT-ROLLED TEMPERS

8.1 The tension test shall be the standard test for all tempers of both cold and hot-rolled copper sheet, strip, plate, and rolled bar, and acceptance or rejection shall depend only on the tensile strength, which shall conform to the requirements prescribed in Table 2. Tension test specimens shall be taken so that the longitudinal axis of such specimens is parallel to the direction of rolling.

GRAIN SIZE OF COLD-ROLLED ANNEALED TEMPERS

9.1 Grain size shall be the standard test for cold-rolled annealed copper sheet and strip, and acceptance or rejection shall depend only on the grain size. The average grain size of each of two samples of annealed material, as determined on a plane parallel to the surface of the sheet or strip, shall be within the limits prescribed in Table 3.

M 138

TABLE 2

Tensile Strength Requirements and Approximate Rockwell Hardness Values for Rolled Tempers

Temper	Tensile Strength, psi		Approximate Rockwell Hardness[a]			
			F Scale		Superficial 30-T	
	Min	Max	Min	Max	Min	Max
Cold-Rolled Tempers						
Light cold-rolled	32 000	40 000	40	82		49
Half hard	37 000	46 000	77	89	43	57
Hard	43 000	52 000	86	93	54	62
Spring	50 000	58 000	91	97	60	66
Extra spring	52 000		92	..	61	
Hot-Rolled Tempers						
Hot-rolled	30 000	38 000		75		41
Hot-rolled and annealed	30 000	38 000		65		31

[a] Rockwell hardness values apply as follows The F scale applies to metal 0.020 in. and over in thickness. The Superficial 30-T scale applies to metal 0 012 in. and over in thickness.

M 138

TABLE 3

Grain Size Requirements and Approximate Rockwell Hardness Values for Cold-Rolled Annealed Tempers

Temper	Grain Size, mm		Approximate Rockwell Hardness[b]	
			F Scale	
	Min	Max	Min	Max
Soft anneal	[a]		..	65
Deep-drawing anneal (0.025 mm)	[a]	0.050	30	75

[a] Although no minimum grain size is required, this material must be fully recrystallized.

[b] Rockwell hardness values apply as follows The F scale applies to metal 0.020 in. and over in thickness.

ROCKWELL HARDNESS

10.1 Since Rockwell hardness tests offer a quick and convenient method of checking copper of any temper for general conformity to the requirements for tensile strength or grain size, the approximate Rockwell hardness values for each temper are given in Table 2 or Table 3 for general information and assistance in testing.

MICROSCOPIC EXAMINATION

11.1 The samples of Copper Nos. 102, 104, 105, 107, 109, 122, and 123 shall be free from cuprous oxide as determined by microscopic examination at 75 × magnification.

EMBRITTLEMENT TEST

12.1 It is to be expected that samples of Copper Nos. 102, 104, 105, 107, 109, 122, and 123 will pass the following embrittlement test, although the actual performance of the test is not mandatory under the terms of this specification unless definitely specified: Suitable test specimens shall be heated to a temperature of 800 to 875 C for a period of 20 min in a furnace containing an atmosphere of hydrogen. After their removal from the furnace the specimens shall be polished, etched if desired, and examined under a microscope at a magnification of 75 to 200 diameters, inclusive. The specimens shall not show gassing or open grain structure characteristic of embrittlement.

ELECTRICAL RESISTIVITY

13.1 When specified in the order, the electrical resistivity determined on samples of Copper Nos. 102, 109, and 110 shall not exceed the following limits when tested at a temperature of 20 C (68 F):

Condition	Electrical Resistivity, max, ohm—gram/meter²
Soft (annealed)	0.15328
Cold-rolled tempers	0.15775

NOTE 3.—The International Annealed Copper Standard electrical conductivity equivalents are as follows:

Electrical Resistivity, ohm—gram/meter²	Conductivity, per cent
0.15328	100.00
0.15775	97.16

13.2 The electrical resistivity of the material shall be determined in accordance with the Method of Test for Resistivity of Electrical Conductor Materials (ASTM: B 193).

DIMENSIONS AND PERMISSIBLE VARIATIONS

14.1 The dimensions and tolerances for material covered by this specification shall be as prescribed in the current edition of ASTM: B 248, with particular reference to 4. Dimensions, Weights, and Permissible variations, and the following tables of that specification:

14.1.1 Thickness.—See 4.2, Table 1.

14.1.2 Width:

(1) Slit Metal and Slit Metal with Rolled Edges.—See 4.3, Table 4.
(2) Square-Sheared Metal.—See 4.3, Table 5.
(3) Sawed Metal.—See 4.3, Table 6.

14.1.3 Length:

(1) Specific and Stock Lengths with and Without Ends.—See 4.4, Table 7.
(2) Schedule of Lengths (Specific and Stock) with Ends.—See 4.4, Table 8.
(3) Length Tolerances for Square-Sheared Metal.—See 4.4, Table 9.
(4) Length Tolerances for Sawed Metal.—See 4.4, Table 10.

14.1.4 Straightness:

(1) Slit Metal.—See 4.5, Table 11.
(2) Slit Metal and Either Straightened or Edge-rolled.—See Section 4.5, Table 11.
(3) Square-Sheared Metal.—See 4.5, Table 12.
(4) Sawed Metal.—See 4.5, Table 13.

14.1.5 Weight: Hot-rolled sheet and plate.—See 4.6, Table 14.

———— o ————

Standard Specification for

Emulsified Asphalt [1]

AASHO DESIGNATION: M 140–70

(ASTM DESIGNATION: D 977–69)

SCOPE

1.1 This specification covers seven grades of emulsified asphalt for use in pavement construction in the manner designated.

[1] This specification applies to anionic emulsions. See AASHO: M 208 for cationic emulsions.

TABLE 1
Requirements for Emulsified Asphalt

Type	Rapid-Setting				Medium-Setting						Slow-Setting			
Grade	RS-1		RS-2		MS-1		MS-2		MS-2h		SS-1		SS-1h	
	min	max	min	max	min	max	min	max	min	max	min	max	min	max
Tests on emulsions:														
Viscosity, Saybolt Furol at 77 F (25 C) s.	20	100			20	100	100		100		20	100	20	100
Viscosity, Saybolt Furol at 122 F (50 C) s.			75	400										
Settlement,[a] 5 days, percent		5		5		5		5		5		5		5
Storage stability test,[b] 1 day		1		1		1		1		1		1		1
Demulsibility,[c] 35 ml, 0.02 *N* $CaCl_2$, percent	60		60											
Coating ability and water resistance:														
Coating, dry aggregate						good		good		good				
Coating, after spraying						fair		fair		fair				
Coating, wet aggregate						fair		fair		fair				
Coating, after spraying						fair		fair		fair				
Cement mixing test, percent												2.0		2.0
Sieve test, percent		0.10		0.10		0.10		0.10		0.10		0.10		0.10
Residue by distillation, percent	55		63		55		65		65		57		57	
Tests on Residue from Distillation Test:														
Penetration, 77 F (25 C), 100 g, 5 s.	100	200	100	200	100	200	100	200	40	90	100	200	40	90
Ductility, 77 F (25 C), 5 cm/min, cm	40		40		40		40		40		40		40	
Solubility in trichloroethylene, percent	97.5		97.5		97.5		97.5		97.5		97.5		97.5	
Suggested uses	surface treatment, penetration macadam and tack coat		surface treatment and penetration macadam		plant or road mixture with coarse aggregate substantially all of which is retained on a No. 8 (2.36-mm) sieve and practically none of which passes a No. 200 (0.075-mm) sieve, tack coat		plant or road mixture with coarse aggregate substantially all of which is retained on a No. 8 (2.36-mm) sieve and practically none of which passes a No. 200 (0.075-mm) sieve				plant or road mixture with graded and fine aggregates, a substantial quantity of which passes a No. 8 (2.36-mm) sieve and a portion of which may pass a No. 200 (0.075-mm) sieve; slurry seal treatments			

[a] The test requirement for settlement may be waived when the emulsified asphalt is used in less than 5 days time; or the purchaser may require that the settlement test be run from the time the sample is received until it is used, if the elapsed time is less than 5 days.
[b] The 24-h (1-day) storage stability test may be used instead of the 5-day settlement test.
[c] The demulsibility test shall be made within 30 days from date of shipment

REQUIREMENTS

2.1 The emulsified asphalt shall be homogenous. Within 30 days after delivery and provided separation has not been caused by freezing, the emulsified asphalt shall be homogeneous after thorough mixing.

2.2 Emulsified asphalt shall conform to the requirements prescribed in Table 1.

SAMPLING

3.1 Samples of emulsified asphalt shall be taken in accordance with AASHO T 40, Sampling Bituminous Materials.

3.2 Samples shall be stored in clean, airtight sealed containers as specified in paragraph 4.1.2 of T 40 at a temperature of not less than 40F (4.5 C) until tested.

METHODS OF TEST

4.1 The properties of the emulsified asphalts given in Table 1 shall be determined in accordance with AASHO T 59, Testing Emulsified Asphalts.

———— o ————

Standard Specification for

Slow Curing Liquid Asphaltic Road Material

AASHO DESIGNATION: M 141–70

SCOPE

1.1 This specification covers liquid petroleum products of the slow curing type to be used in the treatment and construction of road surfaces.

GENERAL REQUIREMENTS

2.1 The oil shall be uniform in appearance and consistency and shall show no foaming when heated to the application temperature. The residue of specified penetration shall be smooth and homogeneous in appearance.

PROPERTIES

3.1 The grade of liquid asphaltic material specified shall conform to the requirements shown in Table 1.

METHODS OF SAMPLING AND TESTING

4.1 Sampling and testing of the liquid asphaltic material shall be in accordance with the following standard methods of the American Association of State Highway Officials.

Sampling	T 40
Water	T 55
Flash point	T 48
Kinematic viscosity	T 201
Saybolt Furol viscosity	T 72
Residue of Specified Penetration	T 56
Ductility	T 51
Solubility in trichloroethylene	T 44
Distillation	T 78
Spot test	T 102

TABLE 1

	SC-70		SC-250		SC-800		SC-3000	
	Min.	Max.	Min.	Max.	Min.	Max.	Min.	Max.
Water, percent		0.5		0.5		0.5		0.5
Flash point C (F)	(150) 65		(175) 80		(200) 93.4		(225) 107.2	
Kinematic Viscosity at 60 C (140 F) (See Note 1) centistokes	70	140	250	500	800	1600	3000	6000
Asphalt residue of 100 pen., percent by wt.	50		60		70		80	
Ductility of 100 pen. residue at 25 C (77 F), 5 cm. per min., cm.	100		100		100		100	
Solubility in trichloroethylene, percent	99		99		99		99	
Total distillate to 360 C (680 F) percent by vol.	10	30	4	20	2	12	0	5
Kinematic viscosity on distillation residue at 60 C (140 F), Stokes	4	70	8	100	20	160	40	350
Spot test (when specified) with: (See Note 2)								
Standard Naphtha solvent	Negative for all grades							
Naphtha Xylene solvent (percent xylene)	Negative for all grades							
Heptane Xylene solvent (percent xylene)	Negative for all grades							

NOTE 1: As an alternate, Saybolt-Furol viscosities may be specified as follows:
Grade SC-70—Furol viscosity at 50 C (122 F)—60 to 120 sec.
Grade SC-250—Furol viscosity at 60 C (140 F)—125 to 250 sec.
Grade SC-800—Furol viscosity at 82.2 C (180 F)—100 to 200 sec.
Grade SC-3000—Furol viscosity at 82.2 C (180 F)—300 to 600 sec.

NOTE 2: The use of the spot test is optional. When specified, the Engineer shall indicate whether the standard naphtha solvent, the naphtha xylene solvent or the heptane xylene solvent will be used in determining compliance with the requirement, and also, in the case of xylene solvents, the percentage of xylene to be used.

———— o ————

Recommended Practice for

The Classification of Soils and Soil-Aggregate Mixtures for Highway Construction Purposes

AASHO DESIGNATION: M 145–66

SCOPE

1.1 This recommended practice describes a procedure for classifying soils into seven groups based on laboratory determination of particle-size distribution, liquid limit and plasticity index. Evaluation of soils within each group is made by means of a "group index," which is a value calculated from an empirical formula. The group classification, including group index, should be useful in determining the relative quality of the soil material for use in earthwork structures, particularly embankments, subgrades, subbases and bases.

TEST PROCEDURES

2.1 The classification is based on the results of tests made in accordance with the following standard methods of AASHO:

2.1.1 Amount of Material Finer Than No. 200 Sieve in Aggregate ..... T 11
2.1.2 Sieve Analysis of Fine and Coarse Aggregates ..... T 27
2.1.3 Mechanical Analysis of Soils ..... T 88
2.1.4 Determining the Liquid Limit of Soils ..... T 89
2.1.5 Determining the Plastic Limit and Plasticity Index of Soils ..... T 90

NOTE 1: Either Method T 88 or Methods T 11 and T 27 will be used to determine the particle-size distribution as a basis for classification

CLASSIFICATION

3.1 The classification is made by using the test limits and group index values shown

in Table 1. If a more detailed classification is desired, a further subdivision of the groups shown in Table 1 may be made. An example of the classification with such subgroups is shown in Table 2. The liquid limit and plasticity index ranges for the A-4, A-5, A-6, and A-7 soil groups are shown graphically in Figure 2.

3.2. *Classification Procedure.*—With required test data available, proceed from left to right in Table 1 or Table 2 and the correct group will be found by process of elimination. The first group from the left into which the test data will fit is the correct classification. All limiting test values are shown as whole number. If fractional numbers appear on test reports, convert to nearest whole number for purposes of classification. Group index values should always be shown in parentheses after group symbol as: A-2-6(3), A-4(5), A-6(12), A-7-5(17), etc.

DEFINITIONS OF GRAVEL, SAND, AND SILT-CLAY

4.1 The terms "gravel," "coarse sand," "fine sand," and "silt-clay," as determinable from the minimum test data required in this classification arrangement and as used in subsequent word descriptions, are defined as follows:

4.1.1 *Gravel.*—Material passing sieve with 3-in. (75 mm) square openings and retained on the No. 10 (2.00 mm) sieve.

4.1.2 *Coarse Sand.*—Material passing the No. 10 (2.00 mm) sieve and retained on the No. 40 (0.425 mm) sieve.

4.1.3 *Fine Sand.*—Material passing the No. 40 (0.425 mm) sieve and retained on the No. 200 (0.075 mm) sieve.

4.1.4 *Silt Clay (Combined silt and clay).*—Material passing the No. 200 (0.075 mm) sieve.

4.1.5 Boulders (retained on 3-in. (75 mm) sieve) should be excluded from the portion of the sample to which the classification is applied, but the percentage of such material, if any, in the sample should be recorded.

4.1.6 The term "silty" is applied to fine material having plasticity index of 10 or less and the term "clayey" is applied to fine material having plasticity index of 11 or greater.

DESCRIPTION OF CLASSIFICATION GROUPS

5.1 *Granular Materials.*—Containing 35 percent or less passing the No. 200 (0.075 mm) sieve. Note 2.

5.1.1 *Group A-1.*—The typical material of this group is a well-graded mixture of stone fragments or gravel, coarse sand, fine sand and a nonplastic or feebly plastic soil binder. However, this group includes also stone fragments, gravel, coarse sand, volcanic cinders, etc. without soil binder.

5.1.1.1 Subgroup A-1-a includes those materials consisting predominantly of stone fragments or gravel, either with or without a well-graded binder of fine material

5.1.1.2 Subgroup A-1-b includes those materials consisting predominantly of coarse sand either with or without a well-graded soil binder.

5.1.2 *Group A-3.*—The typical material of this group is fine beach sand or fine desert blow sand without silty or clay fines or with a very small amount of nonplastic silt. The group includes also stream-deposited mixtures of poorly-graded fine sand and limited amounts of coarse sand and gravel.

5.1.3 *Group A-2.*—This group includes a wide variety of "granular" materials which are border-line between the materials falling in Groups A-1 and A-3 and silt-clay materials of Groups A-4, A-5, A-6, and A-7. It includes all materials containing 35 percent or less passing the No. 200 (0.075 mm) sieve which cannot be classified as A-1 or A-3, due to fines content or plasticity or both, in excess of the limitations for those groups.

5.1.3.1 Subgroups A-2-4 and A-2-5 include various granular materials containing 35 per cent or less passing the No. 200 (0.075 mm) sieve and with a minus No. 40 (0.425 mm) portion having the characteristics of the A-4 and A-5 groups. These groups include such materials as gravel and coarse sand with silt contents or plasticity indexes in excess of the limitations of Group A-1, and fine sand with nonplastic silt content in excess of the limitations of Group A-3.

5.1.3.2 Subgroups A-2-6 and A-2-7 include materials similar to those described under Subgroups A-2-4 and A-2-5 except that the fine portion contains plastic clay

having the characteristics of the A-6 or A-7 group.

NOTE 2: Classification of materials in the various groups applies only to the fraction passing the 3-in. sieve. Therefore, any specification regarding the use of A-1, A-2, or A-3 materials in construction should state whether boulders (retained on 3-in. sieve) are permitted.

5.2 *Silt-Clay Materials.*—Containing more than 35 percent passing the No. 200 (0.075 mm) sieve.

5.2.1 *Group A-4.*—The typical material of this group is a nonplastic or moderately plastic silty soil usually having the 75 percent or more passing the No. 200 (0.075 mm) sieve. The group includes also mixtures of fine silty soil and up to 64 percent of sand and gravel retained on No. 200 (0 075 mm) sieve.

5.2.2 *Group A-5.*—The typical material of this group is similar to that described under Group A-4, except that it is usually of diatomaceous or micaceous character and may be highly elastic as indicated by the high liquid limit.

5.2.3 *Group A-6.*—The typical material of this group is a plastic clay soil usually having 75 percent or more passing the No. 200 (0.075 mm) sieve. The group includes also mixtures of fine clayey soil and up to 64 percent of sand and gravel retained on the No 200 (0.075 mm) sieve. Materials of this group usually have high volume change between wet and dry states.

5.2.4 *Group A-7.*—The typical material of this group is similar to that described under Group A-6, except that it has the high liquid limits characteristic of the A-5 group and may be elastic as well as subject to high volume change.

5.2.4.1 Subgroup A-7-5 includes those materials with moderate plasticity indexes in relation to liquid limit and which may be highly elastic as well as subject to considerable volume change.

5.2.4.2 Subgroup A-7-6 includes those materials with high plasticity indexes in relation to liquid limit and which are subject to extremely high volume change.

NOTE 3: Highly organic soils (peat or muck) may be classified in an A-8 group. Classification of these materials is based on visual inspection, and is not dependent on percentage passing the No. 200 (0.075 mm) sieve, liquid limit or plasticity index. The material is composed primarily of partially decayed organic matter, generally has a fibrous texture, dark brown or black color and odor of decay.

These organic materials are unsuitable for use in embankments and subgrades. They are highly compressible and have low strength.

GROUP INDEX

6.1 The group index is calculated from the following formula:

Group index = (F-35) [0.2 + 0.005 (LL-40)] + 0.01 (F-15) (PI-40), in which

F = percentage passing No. 200 (0.075 mm) sieve, expressed as a whole number. This percentage is based only on the material passing the 3-in. (75 mm) sieve.

LL = liquid limit

PI = plasticity index

6.1.1 When the calculated group index is negative, the group index shall be reported as zero (0).

6.1.2 The group index should be reported to the nearest whole number.

6.2 Figure 1 may be used in estimating the group index, by determining the partial group index due to liquid limit and that due to plasticity index, then obtaining the total of the two partial group indexes.

6.3 When calculating the group index of A-2-6 and A-2-7 subgroups, only the PI portion of the formula (or of Figure 1) shall be used.

6.4 The following are examples of calculations of the group index:

6.4.1 Assume that an A-6 material has 55 percent passing the No. 200 (0.075 mm) sieve, liquid limit of 40, and plasticity index of 25. Then

$$\text{Group index} = (55\text{-}35)\,[0.2 + 0.005\,(40\text{-}40)] + 0.01\,(55\text{-}15)\,(25\text{-}10)$$
$$= 4.0 + 6.0 = 10$$

6.4.2 Assume that an A-7 material has 80 percent passing the No. 200 (0.075 mm) sieve, liquid limit of 90, and plasticity index of 50. Then,

Group index = (80-35) [0.2 + 0.005 (90-40)] + 0.01 (80-15) (50-10)
= 20.3 + 26.0, or 46

6.4.3 Assume that an A-4 material has 60 percent passing the No. 200 (0.075 mm) sieve, liquid limit of 25, and plasticity index of 1. Then,

Group index = (60-35) [0.2 + 0.005 (25-40)] + 0.01 (60-15) (1-10)
= 25 × (0.2 − 0.075) + 0.01 (45) (−9)
= 3.1 − 4.1 = −1.0 Report as 0

6.4.4 Assume that an A-2-7 material has 30 percent passing the No. 200 (0.075 mm) sieve, liquid limit of 50, and plasticity index of 30. Then,

Group index = 0.01 (30-15) (30-10)
= 3.0 or 3 (Note that only the PI portion of formula was used)

BASIS FOR GROUP INDEX FORMULA

7.1 The empirical group index formula devised for approximate within-group evaluation of the "clayey granular materials" and the "silt-clay materials" is based on the following assumptions:

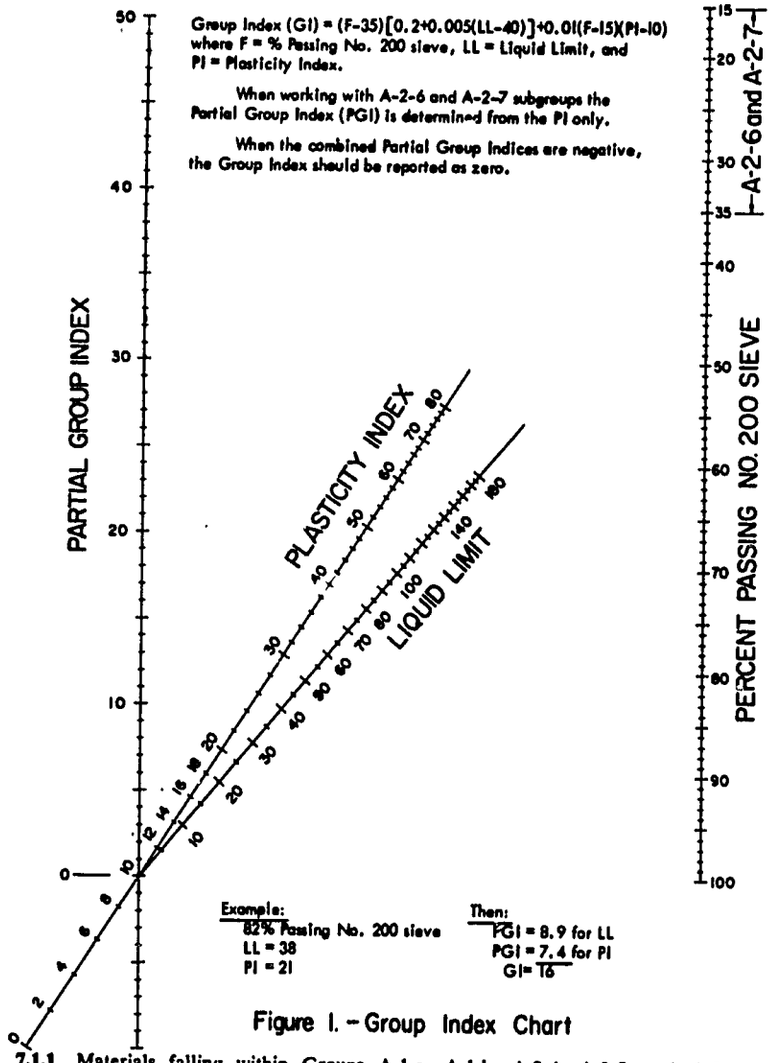

Figure I. – Group Index Chart

7.1.1 Materials falling within Groups A-1-a, A-1-b, A-2-4, A-2-5, and A-3 are satisfactory as subgrade when properly drained and compacted under moderate thickness pavement (base and/or surface course) of a type suitable for the traffic to be carried, or can be made satisfactory by additions of small amounts of natural or artificial binders.

7.1.2 Materials falling within the "clayey granular" Groups A-2-6 and A-2-7 and the "silt-clay" Groups A-4, A-5, A-6, and A-7 will range in quality as subgrade from the approximate equivalent of the good A-2-4 and A-2-5 subgrades to fair and poor subgrades requiring a layer of subbase material or an increased thickness of base course over that required under 7.1.1, in order to furnish adequate support for traffic loads.

TABLE 1
Classification of Soils and Soil-Aggregate Mixtures

General Classification	Granular Materials (35% or less passing No. 200)			Silt-Clay Materials (More than 35% passing No. 200)			
Group Classification	A-1	A-3[a]	A-2	A-4	A-5	A-6	A-7
Sieve Analysis, Percent passing:							
No. 10 (2.00 mm)	...	...	...	...	...	...	...
No. 40 (0.425 mm)	50 max.	51 min.	...	...	...	...	...
No. 200 (0.075 mm)	25 max.	10 max.	35 max.	36 min.	36 min.	36 min.	36 min.
Characteristics of Fraction passing No. 40 (0.425 mm)							
Liquid limit	...	...	[b]	40 max.	41 min.	40 max.	41 min.
Plasticity index	6 max.	N.P.	[b]	10 max.	10 max.	11 min.	11 min.
General Rating as Subgrade	Excellent to Good			Fair to Poor			

[a] The placing of A-3 before A-2 is necessary in the "left to right elimination process" and does not indicate superiority of A-3 over A-2.
[b] See Table 2 for values.

TABLE 2
Classification of Soils and Soil-Aggregate Mixtures

General Classification	Granular Materials (35% or less passing No. 200)							Silt-Clay Materials (More than 35% passing No. 200)			
	A-1			A-2							A-7
Group Classification	A-1-a	A-1-b	A-3	A-2-4	A-2-5	A-2-6	A-2-7	A-4	A-5	A-6	A-7-5, A-7-6
Sieve Analysis, Percent passing:											
No. 10 (2.00 mm)	50 max								...	...	...
No. 40 (0.425 mm)	30 max.	50 max.	51 min								
No. 200 (0.075 mm)	15 max	25 max	10 max	35 max.	35 max.	35 max	35 max.	36 min.	36 min.	36 min.	36 min.
Characteristics of Fraction passing No. 40 (0.425 mm)											
Liquid limit	6 max.		N.P.	40 max.	41 min	40 max.	41 min.	40 max.	41 min.	40 max.	41 min.
Plasticity index				10 max.	10 max.	11 min.	11 min.	10 max.	10 max.	11 min.	11 min.[a]
Usual Types of Significant Constituent Materials	Stone Fragments, Gravel and Sand		Fine Sand	Silty or Clayey Gravel and Sand				Silty Soils		Clayey Soils	
General Rating as Subgrade	Excellent to Good							Fair to Poor			

[a] Plasticity index of A-7-5 subgroup is equal to or less than LL minus 30. Plasticity index of A-7-6 subgroup is greater than LL minus 30 (see Figure 2).

7.1.3 The assumed critical minimum percentage passing the No. 200 (0.075 mm) sieve is 35 neglecting plasticity, and 15 as affected by plasticity indexes greater than 10.

7.1.4 Liquid limits of 40 and above are assumed to be critical.

7.1.5 Plasticity indexes of 10 and above are assumed to be critical.

7.1.6 For soils that are non-plastic and when the liquid limit cannot be determined, the group index shall be considered zero (0).

7.2 There is no upper limit of group index value obtained by use of the formula. The adopted critical values of percentage passing the No. 200 (0.075 mm) sieve, liquid limit

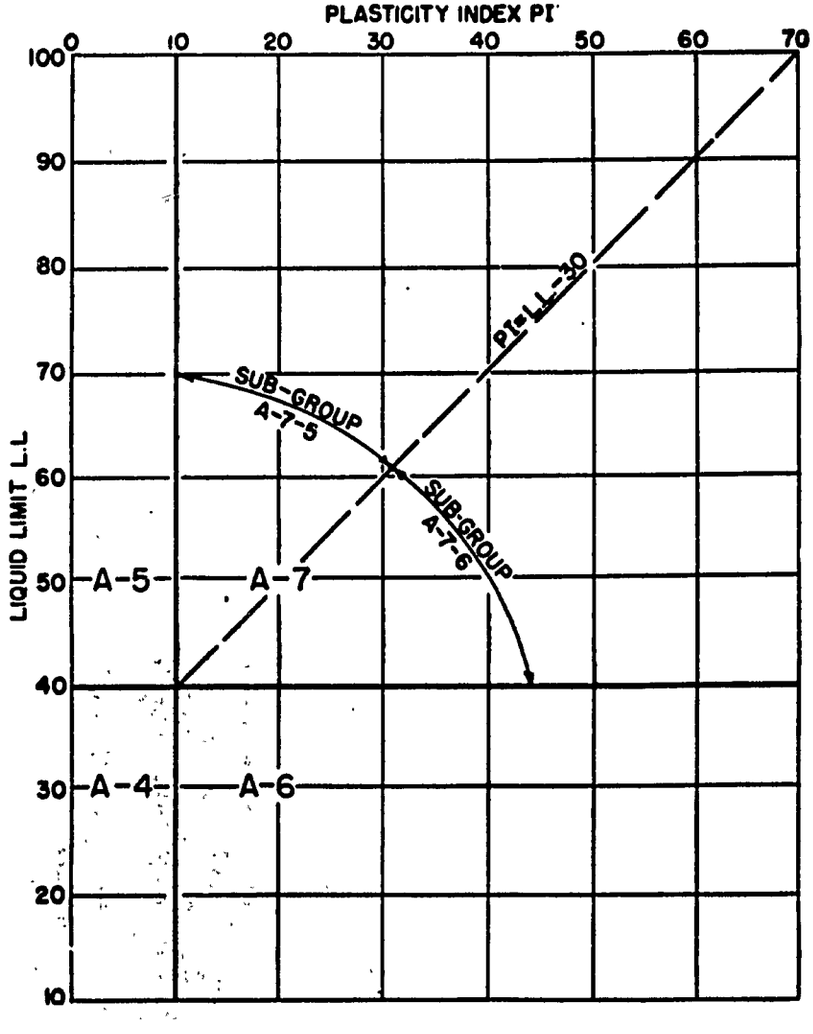

FIG. 2.—*Liquid Limit and Plasticity Index Ranges for the A-4, A-5, A-6 and A-7 Subgrade Groups*

and plasticity index, are based on an evaluation of subgrade, subbase and base course materials by several highway organizations that use the tests involved in this classification system.

7.3 Under average conditions of good drainage and thorough compaction, the supporting value of a material as subgrade may be assumed as an inverse ratio to its group index, that is, a group index of 0 indicates a "good" subgrade material and group index of 20 or greater indicates a "very poor" subgrade material.

———— o ————

Standard Specification for

Materials for Aggregate and Soil-Aggregate Subbase, Base and Surface Courses

AASHO DESIGNATION: M 147–65

SCOPE

1.1 This specification covers the quality and grading of sand-clay mixtures; gravel, stone or slag screenings; or sand, crusher run coarse aggregate consisting of gravel, crushed stone or slag with or without soil mortar or any combination of these materials for use in the construction of subbase, base and surface courses. The requirements are intended to cover only materials having normal or average specific gravity, absorption and gradation characteristics. Where other materials are to be used, appropriate limits suitable to their use must be specified.

GENERAL REQUIREMENTS

2.1 Coarse Aggregate.

2.1.1 Coarse aggregate retained on the No. 10 (2.00 mm) sieve shall consist of hard, durable particles or fragments of stone, gravel or slag. Materials that break up when alternately frozen and thawed or wetted and dried shall not be used.

2.1.2 Coarse aggregate shall have a percentage of wear, by the Los Angeles test, of not more than 50.

NOTE: A higher or lower percentage of wear may be specified by the Engineer, depending upon the materials available for the work

2.2 Fine Aggregate.

2.2.1 Fine aggregate passing the No. 10 (2.00 mm) sieve shall consist of natural or crushed sand, and fine mineral particles passing the No. 200 (0.075 mm) sieve.

2.2.2 The fraction passing the No. 200 (0.075 mm) sieve shall not be greater than two-thirds of the fraction passing the No. 40 (0.425 mm) sieve. The fraction passing the No. 40 (0.425 mm) sieve shall have a liquid limit not greater than 25 and a plasticity index not greater than 6.

2.3 All material shall be free from vegetable matter and lumps or balls of clay. The soil-aggregate material shall conform to the grading requirements of Table 1. The grading requirements for composite aggregate material will be specied by the Engineer.

TABLE 1
Grading Requirements for Soil-Aggregate Materials

Sieve designation	Percentage by weight passing square mesh sieves					
	Grading A	Grading B	Grading C	Grading D	Grading E	Grading F
2-inch (50mm)	100	100				
1-inch (25.0 mm)	..	75-95	100	100	100	100
⅜-inch (9.5 mm)	30-65	40-75	50-85	60-100	.	.
No. 4 (4.75 mm)	25-55	30-60	35-65	50-85	55-100	70-100
No. 10 (2.00 mm)	15-40	20-45	25-50	40-70	40-100	55-100
No. 40 (0.425 mm)	8-20	15-30	15-30	25-45	20-50	30-70
No. 200 (0.075 mm)	2-8	5-20	5-15	5-20	6-20	8-25

SUBBASE MATERIALS

3.1 Materials for subbase shall conform to the requirements of 2 and 3 for gradings A, B, C, D, E, or F. The type and grading desired shall be specified.

NOTE: Where local experience has shown that lower percentages passing the No. 200 (0.075 mm) sieve than are required in Table 1 are necessary for subbase materials in order to prevent damage by frost action, the Engineer should specify such lower percentages.

BASE COURSE MATERIALS

4.1 Materials for base course shall conform to the requirements of 2 and 3 for gradings A, B, C, D, E, or F. The grading desired shall be specified.

NOTE: Where local experience has shown that lower percentages passing the No. 200 (0.075 mm) sieve than are required in Table 1 are necessary for base course materials in order to prevent damage by frost action, the Engineer should specify such lower percentages.

SURFACE COURSE MATERIALS

5.1 Materials for surface course shall conform to the requirements of 2 and 3 for gradings C, D, E, or F. The grading desired shall be specified.

NOTE: Where it is planned that the soil aggregate surface course is to be maintained for several years without bituminous surface treatment or other superimposed impervious surfacing, the Engineer should specify a minimum of 8 per cent passing No. 200 (0.075 mm) sieve in lieu of the minimum percentages shown in Table 1 for grading C, D, or E, and should specify a maximum liquid limit of 35 and plasticity index range of 4 to 9 in lieu of the limits given in 2.2.2.

MOISTURE CONTENT

6.1 All materials shall contain moisture equal to or slightly below the optimum necessary to insure that the design density requirements are obtained when materials are compacted.

ADMIXTURE

7.1 Calcium chloride used for the control of moisture shall meet the requirements of Standard Specifications for Calcium Chloride (AASHO: M 144.)

METHODS OF SAMPLING AND TESTING

8.1 Sampling and testing shall be in accordance with the following standard methods of the American Association of State Highway Officials:

Sampling	T 2
Sieve Analysis	T 27 or T 88
Sampling and Testing Soils for Highway Subgrades	T 86
Preparing Samples	T 87
Liquid Limit	T 89
Plastic Limit and Plasticity Index	T 90
Percentage of Wear	T 96
Passing No. 200 Sieve	T 11

———o———

Standard Specification for

Liquid Membrane-Forming Compounds for Curing Concrete

AASHO DESIGNATION: M 148–68

(ASTM DESIGNATION: C 309–58 (1966))

SCOPE

1.1 This specification covers liquid membrane-forming compounds suitable for spraying on horizontal and vertical concrete surfaces to retard the loss of water during the early hardening period. Four general types are included:

Type 1. Clear or translucent,
Type 2. White pigmented,
Type 3. Light-gray pigmented, and
Type 4. Black.

NOTE: The compounds covered by this specification are suitable for use as curing media not only for fresh concrete, but also for further curing of concrete after removal of forms or after initial moist curing.

COMPOSITION AND PROPERTIES

2.1 The ingredients of liquid membrane-forming compounds are not restricted, provided that none shall be toxic or dangerously inflammable. Use of benzene, toluene, carbon tetrachloride, methyl alcohol, and the other toxic materials shall not be permitted.

2.2 The clear or translucent compound, type 1, shall be light in color, may contain a fugitive dye, and shall be readily distinguishable upon the concrete surface for at least 4 hr. after application. The color, if any, shall become inconspicuous within 7 days after application.

2.3 The white pigmented compound, type 2, shall consist of finely divided white pigment and vehicle, ready mixed for immediate use without alteration The compound when applied to a new concrete surface at the specified rate of application, shall present a uniform white appearance and shall effectively obscure the original color of the concrete. When applied to concrete at the specified rate of application, the compound shall exhibit a daylight reflectance of not less than 60 per cent of that of magnesium oxide.

2.4 The light-gray pigmented compound, type 3, shall consist of finely divided light-gray pigment and vehicle, ready-mixed for immediate use without alteration. The compound when applied to a new concrete surface at the specified rate of application shall present a uniform light-gray appearance and shall effectively obscure the original color of the concrete. When applied to concrete at the specified rate of application, the compound shall exhibit a daylight reflectance not less than 50 per cent of that of magnesium oxide.

2.5 No special requirements are prescribed for the black compound, type 4.

CHARACTER OF THE FILM

3.1 The compound shall adhere to damp concrete and shall form a continuous coherent film when applied at the specified rate of application. When dry, the covering shall be continuous, flexible, and without breaks or pin-holes and shall remain as an unbroken film for at least seven days after application to the laboratory specimen. The liquid membrane forming compound shall not react deleteriously with the concrete.

NOTE.—An approximate idea of the effect of the compound on the surface of the concrete may be obtained by scratching the surface with a knife or screwdriver, not less than 72 hr after application, and comparing with the surface hardness similarly determined of a similar specimen that has been moist-cured approximately half as long Any significant softening of the compound-treated concrete surface indicated by such comparison should be considered sufficient cause for rejection of the compound.

CONSISTENCY

4.1 The liquid membrane-forming compound shall be of such consistency at the time of application in the field that it can be sprayed readily to a uniform coating at temperatures

above 40 F (4 C) by means of atomizing nozzles. When sprayed on the vertical face of a damp concrete block in the laboratory at the specified rate of application, it shall not run or sag.

STORAGE STABILITY

5.1 The membrane-forming compounds shall be storable for at least three months without deterioration, except that compound of the water-emulsion type will not be expected to resist freezing. The compound shall not settle to the extent that it cannot be readily restored to uniformity by moderate stirring or by agitation by compressed air.

DRYING TIME

6.1 When applied to a damp concrete surface at the specified rate of application, the membrane-forming compound shall dry to touch in not more than four hours under the following standard laboratory conditions: 73.4 ± 3 F (23 ± 1.7 C), 50 ± 10 per cent relative humidity, and a minimum air velocity of 600 feet per minute (3.05 m/s). When dried, the compound shall not be tacky nor track off the concrete when walked upon, nor shall it impart a slippery surface to the concrete.

MOISTURE RETENTION

7.1 When tested in the water retention test, the liquid membrane-forming compound shall restrict the loss of water present in the test specimen at the time of application of the curing compound to not more than 0.055 g per 100 mm^2 of surface.

PACKING AND MARKING

8.1 The liquid membrane-forming compound shall be delivered in the manufacturer's original clean, sealed containers. Each container shall be legibly marked with the name of the manufacturer, the name of the compound, and the manufacturer's batch number. The contents of the containers shall be in all respects the same as the sample tested.

SAMPLING

9.1 Samples may be taken at the plant or warehouse prior to delivery or at the point of delivery, at the option of the purchaser. The inspector representing the purchaser shall have free access to the containers being loaded for shipment to the purchaser. He shall be afforded all reasonable facilities for inspection and sampling which shall not interfere unnecessarily with the loading of the carriers.

9.2 The compound to be sampled shall be shaken or stirred thoroughly in the container before the sample is taken. One sample shall be taken at random from a single container representing each lot, batch, or other unit of production in a shipment, provided that no sample shall represent more than 2,000 gallons (approx. 10000 liters).

METHODS OF TESTING

10.1 The water retention test shall be conducted in accordance with the Standard Method of Test for Water Retention Efficiency of Liquid Membrane-Forming Compounds and Impermeable Sheet Materials for Curing Concrete (AASHO: T 155).

10.2 The apparent daylight reflectance shall be determined in accordance with Standard Method of Test for 45-degree, 0-degree Directional Reflectance of Opaque Specimens by Filter Photometry (ASTM: E 97).

———— o ————

Standard Specification for

Masonry Cement

AASHO DESIGNATION: M 150–70

(ASTM DESIGNATION: C 91–69)

SCOPE

1.1 This specification covers masonry cement for general use where mortars for masonry are required.

PHYSICAL REQUIREMENTS

2.1 Masonry cement shall conform to the requirements prescribed in Table 1.

STAINING

3.1 This requirement shall apply only when the purchaser requires that the cement shall be nonstaining to limestone. Nonstaining cement shall contain not more than 0.03 per cent of water-soluble alkali when determined in accordance with 15. Procedure, and 16. Calculation.

NOTE 1—The amount and nature of the staining material in limestones seems to vary with the stone. The alkali in any cement may, therefore, induce markedly different staining on different stone, even though the stone may have come apparently from the same source. The amount of water-soluble alkali permitted by the specification should not cause stain unless stone high in staining material has been used, or unless insufficient means have been used to prevent infiltration of water into the masonry.

PACKAGING AND MARKING

4.1 When masonry cement is delivered in packages, the brand, name of manufacturer, and net weight of package in pounds shall be plainly indicated thereon. Similar information shall be provided in the shipping advices accompanying the shipment of masonry cement in bulk.

STORAGE

5.1 The cement shall be stored in such a manner as to permit easy access for proper inspection and identification of each shipment, and in a suitable weather-tight building that will protect the cement from dampness and minimize warehouse set.

TABLE 1
Physical Requirements

Fineness, residue on a No. 325 (0.045 mm) sieve, max, per cent	15
Soundness:	
Autoclave expansion, max, per cent	1.0
Time of setting, Gillmore method.	
Initial set, min hr.	2
Final set, max hr.	24
Compressive strength (average of 3 cubes).	
The compressive strength of mortar cubes, composed of 1 part cement and 3 parts blended sand (half graded Ottawa sand, and half standard 20–30 Ottawa sand) by volume, prepared and tested in accordance with this specification shall be equal to or higher than the values specified for the ages indicated below:	
7 days, psi	500
(kgf/mm²)	(0.3515)
28 days, psi	900
(kgf/mm²)	(0.6328)
Air content of mortar prepared and tested in accordance with requirements of this specification	
Min, per cent by volume	12
Max, per cent by volume	22
Water retention, min, per cent of original flow	70

INSPECTION

6.1 Every facility shall be provided the purchaser for the necessary inspection and sampling.

6.2 All packages shall be in good condition at the time of inspection.

REJECTION

7.1 The cement may be rejected if it fails to meet any of the requirements of this specification.

7.2 Packages varying more than 5 per cent from the weight marked thereon may be rejected and if the average weight of packages in any shipment as shown by weighing 50 packages taken at random is less than the weight marked thereon, the entire lot represented may be rejected.

7.3 Cement remaining in storage prior to shipment for a period greater than 6 months after test may be retested and may be rejected if it fails to meet any of the requirements of this specification.

SAMPLING AND METHODS OF TESTING MASONRY CEMENT

SAMPLING

8.1 The masonry cement shall be sampled in accordance with AASHO: T 127 Sampling Hydraulic Cement.

TEMPERATURE AND HUMIDITY

9.1 The temperature of the air in the vicinity of the mixing slab and dry materials, molds, base plates, and mixing bowl shall be maintained between 20 and 27.5 C (68 and 81.5 F). The temperature of the mixing water, moist cabinet or moist room, and water in the storage tank shall not vary from 23 C (73.4 F), by more than ± 1.7 C (3 F).

9.2 The relative humidity of the laboratory air shall be not less than 50 per cent. The moist cabinet or moist room atmosphere shall have a relative humidity of not less than 90 per cent.

9.3 The moist cabinet or moist room shall conform to the requirements of AASHO M 201 for Moist Cabinets and Rooms Used in the Testing of Hydraulic Cements and Concretes.

FINENESS

PROCEDURE

10.1 Determine the residue on the No. 325 (0.045 mm) sieve in accordance with AASHO: T 192, Test for Fineness of Hydraulic Cement by the No. 325 Sieve.

NORMAL CONSISTENCY

PROCEDURE

11.1 Determine normal consistency by the Vicat apparatus in accordance with AASHO: T 129 Test for Normal Consistency of Hydraulic Cement.

SOUNDNESS

PROCEDURE

12.1 Determine soundness in accordance with AASHO: T 107 Test for Autoclave Expansion of Portland Cement. After molding, store the bars in the moist cabinet or room for 48 hr ± 30 min before removal from the molds for measurement and test in the autoclave. Calculate the difference in length of the test specimen before and after autoclaving to the nearest 0.01 per cent of the effective gage length and report as the autoclave expansion of the masonry cement.

TIME OF SETTING

PROCEDURE

13.1 Determine the time of setting by the Gillmore needle method in accordance with AASHO: T 154 Test for Time of Setting of Hydraulic Cement by Gillmore Needles.

SPECIFIC GRAVITY

PROCEDURE

14.1 Determine the specific gravity of the masonry cement in accordance with AASHO: T 133 Ttest for Specific Gravity of Hydraulic Cement, using Kerosine as the liquid. Use the specific gravity so determined in the calculation of the air content of the mortars.

STAINING TEST (DETERMINATION OF WATER-SOLUBLE ALKALI)

PROCEDURE

15.1 Determine Water-soluble alkali in accordance with Section 49 of AASHO: T 105 for Chemical Analysis of Hydraulic Cement.

CALCULATION

16.1 Calculate the per cent of water-soluble alkali expressed as Na_2O to the nearest 0.01 in accordance with Section 50 of T 105.

APPARATUS

17.1 Scales and weights, sieves, glass graduates, specimen molds, tamper, trowel cube molds, and testing machine as described in AASHO. T 106 Test for Compressive Strength of Hydraulic Cement Mortar (Using 2-in. (50 mm) Cube Specimens).

17.2 The flow table shall conform to the requirements prescribed in AASHO: M 152 for Flow Table for Use in Tests of Hydraulic Cement.

17.3 The mixing apparatus shall conform to the requirements prescribed in AASHO T 162 for Mechanical Mixing of Hydraulic Cement Pastes and Mortars of Plastic Consistency.

17.4 The measure, straightedge, spatula, tapping stick and spoon shall conform to the requirements given in AASHO T 137 Test for Air Content of Hydraulic Cement Mortar.

17.5 *Specimen Molds.*—Specimen molds shall be prepared in accordance with Section 7 of T 106.

BLENDED SAND

18.1 The sand shall be a blend of equal parts by weight of graded Ottawa sand and standard 20-30 Ottawa sand. The fineness of graded Ottawa sand may be checked by using the method described in Section 5 of T 106 The fineness of Standard Ottawa 20-30 sand may be checked by using the method described in Section 4 of T 137.

PREPARATION OF MORTAR

19.1 *Proportions for Mortar.*—Mortar for compressive strength, water retention, and air entrainment shall be proportioned to contain the weight of cement, in grams, equal to six times the printed bag weight in pounds (13.228 times the printed bag weight in kilo grams) and 1440 g of sand. The sand shall consist of 720 g of graded Ottawa sand and 720 g of 20–30 Ottawa Sand (Note 2). The quantity of water, measured in cm^3 shall be such as to produce a flow of 110 ± 5 as determined by the flow table.

NOTE 2.—If the printed bag weight in pounds is 70 (31.75 kg), the mortar shall contain 420 g of cement. The specified mortar proportions are approximately the 1:3 nominal proportions by volume, commonly specified for construction, as indicated in the following calculation:

If a bag of masonry cement contained 1 ft³ (0.0283 m³) of cement, and 1 ft³ of loose damp sand contained 80 lb (36.29 kg) of dry sand,

$$A = 1440 \times \frac{C}{B}$$

where:

A = number of grams of cement to be used in the mortar with 1440 g of sand,
B = 240 lb (108.86 kg), the weight of dry sand in 3 ft³ (0.0849 m³) of loose damp sand, and
C = weight per bag.

19.2 *Mixing of Mortars.*—Mix the mortar in accordance with Section 6 of AASHO T 162.

19.3 *Determination of Flow.*—Determine the flow in accordance with Section 9 of AASHO T 106.

AIR ENTRAINMENT

PROCEDURE

20.1 If the mortar has the correct flow, use a separate portion of the mortar for the determination of entrained air. Determine the weight of 400 ml of mortar in accordance with Section 5.4 of AASHO T 137.

CALCULATION

21.1 Calculate the air content of the mortar and report it to the nearest 0.1 per cent as follows:

$$D = \frac{W_1 + W_2 + V_w}{\frac{W_1}{S_1} + \frac{W_2}{S_2} + V_w}$$

$$A = 100 - \frac{W_m}{4D}$$

where:

D = density of air-free mortar,
W_1 = weight of cement in grams,
W_2 = weight of sand in grams,
V_w = cubic centimeters of water used,
S_1 = specific gravity of cement,
S_2 = specific gravity of Ottawa sand (2.65),
A = percentage of entrained air, by volume, and
W_m = weight of 400 cm³ of mortar in grams.

COMPRESSIVE STRENGTH

TEST SPECIMENS

22.1 *Molding.*—Immediately after determining the flow and the weight of 400 ml of mortar, return all the mortar to the mixing bowl and remix for 15 sec at the medium speed. Then mold test specimens in accordance with Section 10 of AASHO: T 106 except that elapsed time for mixing mortar, determining flow, determining air entrainment, and starting the molding of cubes shall be within 8 min.

22.2 *Storage.*—Store all test specimens immediately after molding, in the molds on plane plates in a moist cabinet, maintained at a relative humidity of 90 per cent or more, for from 48 to 52 hr in such a manner that the upper surfaces shall be exposed to the moist air. Then remove the cubes from the molds and place in the moist cabinet for 5 days in such a manner as to allow free circulation of air around at least five faces of the specimens. At the age of 7 days immerse the cubes for the 28-day tests in clean water in storage tanks of noncorrodible materials.

PROCEDURE

23.1 Test the cube specimens immediately after their removal from the moist cabinet for 7-day specimens, and immediately after their removal from storage water for all other specimens. If more than one specimen at a time is removed from the moist closet for 7-day tests cover these cubes with a damp cloth until time of testing. If more than one specimen at a time is removed from the storage water for testing, place these cubes in a pan of water at a temperature of 23 ± 1.7 C (73.4 ± 3 F) and of sufficient depth to completely immerse each cube until time of testing

23.2 The remainder of the testing procedure shall conform respectively to Sections 12.2, 12.3, 13, and 14 of AASHO: T 106.

WATER RETENTION

APPARATUS

24.1 *Water Retention Apparatus.*—For the water retention test, an apparatus essentially the same as that shown in Fig. 1 shall be used. This apparatus consists of a water aspirator or other source of vacuum controlled by a mercury relief column and connected by way of a three-way stopcock to a funnel upon which rests a perforated dish. The perforated dish shall be made of metal not attacked by masonry mortar. The metal in the base of the dish shall have a thickness of 1.7 to 1.9 mm and shall conform to the requirements given in Fig. 1. The bore of the stopcock shall have a 4 ± 0.5-mm diameter,

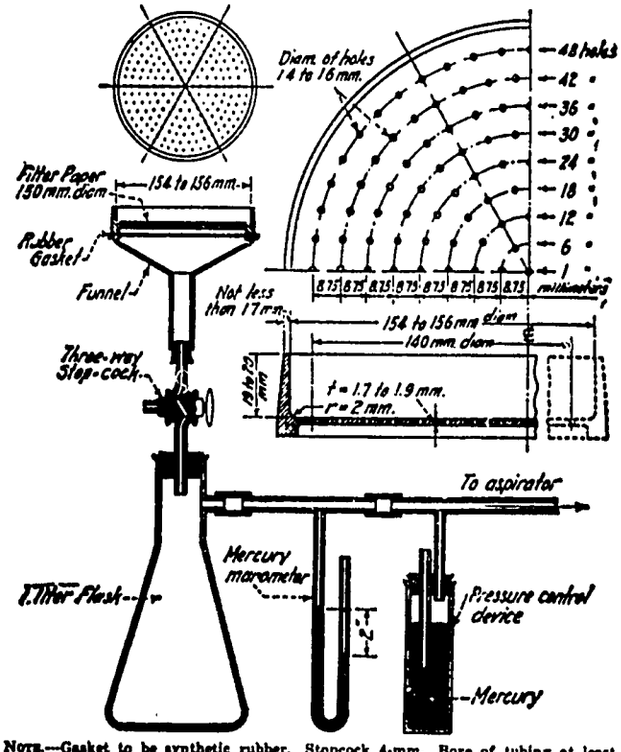

NOTE.—Gasket to be synthetic rubber. Stopcock 4-mm. Bore of tubing at least 4 mm. Check valve or water trap, or both, suggested for connection to aspirator.

FIG. 1.—*Apparatus Assembly for the Water Retention Test.*

and the connecting glass tubing shall have a minimum inside diameter of 4 mm. A mercury manometer connected as shown in Fig. 1, indicates the vacuum. The contact surfaces of the funnel and perforated dish shall be plane and shall be lapped to ensure intimate contact. An airtight seal shall be maintained between the funnel and the dish during a test. This shall be accomplished by either of the following procedures: (*1*) A synthetic (grease-resistant) rubber gasket may be permanently sealed to the top of the funnel, using petrolatum or light grease to ensure a seal between the funnel and dish, or (*2*) the top of the funnel may be lightly coated with petrolatum or light grease to ensure a seal between the funnel and dish. Care should be taken to ensure that none of the holes in the perforated dish are clogged from the grease. Hardened, very smooth, not rapid filter paper shall be used. It shall be of such diameter that it will lie flat and completely cover the bottom of the dish.

24.2 Straightedge.—A steel straightedge not less than 8 in. (203 mm) long and not less than 1/16 in. (1.59 mm) nor more than 1/8 in. (3.18 mm) in thickness.

24.3 *Other Apparatus.*—Other apparatus required for the water retention test shall conform to the applicable requirements of 18. Apparatus, of this specification.

PROCEDURE

25.1 Adjust the mercury relief column to maintain a vacuum of 50.8 mm as measured on the manometer. Seat the perforated dish on the greased gasket of the funnel. Place a wetted filter paper in the bottom of the dish. Turn the stopcock to apply the vacuum to the funnel and check the apparatus for leaks and to determine that the required vacuum is obtained. Then turn the stopcock to shut off the vacuum from the funnel.

25.2 Mix the mortar to a flow of 110 ± 5 per cent in accordance with the procedure described in Section 6 of AASHO: T 162. Immediately after making the flow test, return the mortar on the flow table to the mixing bowl and remix the entire batch for 15 sec at medium speed. Immediately after remixing the mortar, fill the perforated dish with the mortar to slightly above the rim. Tamp the mortar 15 times with the tamper. Apply ten of the tamping strokes at approximately uniform spacing adjacent to the rim of the dish and with the long axis of the tamping face held at right angles to the radius of the dish. Apply the remaining five tamping strokes at random points distributed over the central area of the dish. The tamping pressure shall be just sufficient to ensure filling of the dish. On completion of the tamping, the top of the mortar should extend slightly above the rim of the dish. Smooth off the mortar by drawing the flat side of the straightedge with the leading edge slightly above the rim of the dish. Then cut off the mortar to a plane surface flush with the rim of the dish by drawing the straightedge with a sawing motion across the top of the dish in two cutting strokes, starting each cut from near the center of the dish. If the mortar is pulled away from the side of the dish during the process of drawing the straightedge across the dish, gently press the mortar back into contact with the side of the dish using the tamper.

25.3 Turn the stopcock to apply the vacuum to the funnel. The time elapsed from the start of mixing the cement and water to the time of applying the vacuum shall not exceed 8 min. After suction for 60 sec, quickly turn the stopcock to expose the funnel to atmospheric pressure. Immediately slide the perforated dish off from the funnel, touch it momentarily on a damp cloth to remove droplets of water, and set the dish on the table. Then, using the bowl scraper (rubber scraper as used in AASHO: T 162) plow and mix the mortar in the dish for 15 sec. Upon completion of mixing, place the mortar in the flow mold and determine the flow. The entire operation shall be carried out without interruption and as quickly as possible, and shall be completed within an elapsed time of 11 min after the start of mixing the cement and water for the first flow determination. Both flow determinations shall be made in accordance with Section 9 of AASHO T 106.

CALCULATION

26.1 Calculate the water retention value for the mortar as follows:

$$\text{Water retention value} = \frac{A}{B} \times 100$$

where:

A = flow after suction, and
B = flow immediately after mixing.

———— o ————

Standard Specification for

Preformed Expansion Joint Fillers for Concrete Paving and Structural Construction

(Nonextruding and Resilient Nonbituminous Type)

AASHO DESIGNATION: M 153–70

(ASTM DESIGNATION: D 1752–67)

SCOPE

1.1 This specification covers preformed expansion joint fillers of the following three types for use in concrete, brick, or stone construction:

Type I, sponge rubber,
Type II, cork, and
Type III, self-expanding cork.

NOTE 1.—Attention is called to the Specifications for Preformed Expansion Joint Fillers for Concrete Paving and Structural Construction (Nonextruding and Resilient Bituminous Types) (AASHO: M 213), and the Specifications for Preformed Expansion Joint Filler for Concrete (Bituminous Type) (AASHO M 33).

MANUFACTURE

2.1 *Sponge Rubber.*—The joint filler shall consist of preformed strips of a durable, elastic sponge rubber compound, using synthetic rubber or natural rubber as a base and containing no reclaim rubber or factice. Unless otherwise specified, the sponge rubber shall have a cement gray color to blend with concrete in appearance.

2.2 *Cork and Self-Expanding Cork.*—The joint filler shall consist of preformed strips that have been formed from clean granulated cork particles securely bound together by a synthetic resin of an insoluble nature.

PHYSICAL REQUIREMENTS

3.1 *Resistance to Handling.*—Preformed strips of expansion joint fillers shall be of such character as not to be deformed or broken by ordinary handling when exposed to atmospheric conditions. Pieces of the joint filler which have been damaged shall be rejected.

3.2 *Recovery.*—The test specimen shall be compressed to 50 (0.035 kgf/mm^2) per cent of its thickness before test. The load shall be released immediately after application. At the end of 10 min after release of application of the load, the specimen shall have recovered to at least 90 per cent of its thickness before test (Note 2).

NOTE 2.—In case of failure to comply with the above requirements, the test specimen shall be given three applications of a load sufficient to compress the material to 50 per cent of its thickness before test. The load shall be released immediately after each application. At the end of 1 hr after the third application, the specimen shall have recovered to at least 90 per cent of its thickness before the test.

3.3 *Compression.*—The load required to compress the test specimen to 50 per cent of its thickness before test shall be not less than 50 (0.035 kgf/mm²) nor greater than 1500 psi (1.054 kgf/mm²).

3.4 *Extrusion.*—The test specimen shall be compressed to 50 per cent of its thickness before test with three of the edges restrained. The amount of extrusion of the free edge shall not exceed 0.25 in. (6.35 mm).

3.5 *Expansion.*—In the case of self-expanding cork (Type III) expansion joint filler only, the test specimen after being immersed in boiling water for 1 hr shall have a final thickness not less than 140 per cent of the thickness before test. Discoloration of the water shall not be considered an indication of failure.

3.6 *Boiling in Hydrochloric Acid.*—In the case of cork and self-expanding cork (Types II and III) expansion joint fillers only, the test specimen shall show no evidence of serious disintegration Discoloration, or a small amount of swelling, shall not be considered as failure. The test specimens shall be examined immediately after the end of the boiling period and shall be rejected for any of the following evidences of disintegration: (*1*) particles of cork dislodged during the boiling period (Note 3), (*2*) specimen lacks resiliency, is very friable, and easily broken to pieces, or (*3*) surface of specimen appears porous and particles of cork are easily dislodged by rubbing with fingers.

NOTE 3.—Particles of cork dislodged from edges cut during preparation of the specimen should not be considered as constituting failure under this requirement

3.7 *Density.*—In the case of sponge rubber (Type I) expansion joint filler only, the density of the dry-air filler shall be not less than 30 lb per cu ft (481g/m³.

3.8 *Weathering Test.*—A weathering test may be conducted in accordance with the procedure specified in Section 7. Test specimens shall show no evidence of disintegration when subjected to the specified weathering test. Test specimens that have been subjected to the specified weathering test may be required to meet the requirements for recovery, compression, and extrusion.

DIMENSIONS AND PERMISSIBLE VARIATIONS

4.1 The preformed strips shall conform to the dimensions specified or shown on the plans. Strips of the joint filler which do not conform to the specified dimensions, within the permissible variations of +1/16 in. (1.6 mm) in thickness, ±1/8 in. (3.2 mm) in depth, and ±1/4 in. (6.4 mm) in length shall be rejected.

SAMPLING

5.1 *Size of Samples.*—Each sample shall consist of sufficient material to provide at least five test specimens measuring 4½ by 4½ in. (Approximately 115 by 115 mm).

5.2 *Number of Samples.*—One representative sample shall be selected from each shipment of 1000 sq ft. (92.9 m²) or fraction thereof of each thickness ordered.

5.3 Samples shall be packed for transportation in such a manner that there will be no danger of distortion or breakage. Samples of self-expanding cork, in addition to the above, shall be kept dry as received and wrapped for transportation in a manner that will prevent the entrance of moisture. Tests shall be made on expansion joint fillers that have not been deformed or broken in handling.

PACKING

6.1 Self-expanding cork filler shall be wrapped in waterproof paper, sealed in a manner that will prevent the entrance of moisture, and packed in sizes convenient for handling on the job.

METHODS OF TEST

7.1 The properties prescribed in this specification shall be determined in accordance with the Methods of Testing Preformed Expansion Joint Fillers for Concrete (AASHO: T 42).

———o———

Standard Specification for

Air Entraining Admixtures for Concrete

AASHO DESIGNATION: M 154–70

ASTM DESIGNATION: C 260–69

SCOPE

1.1 This specification covers materials proposed for use as air-entraining admixtures to be added to concrete mixtures in the field.

DEFINITION

2.1 For the purpose of this specification an air-entraining admixture is defined as a material that is used as an ingredient of concrete, added to the batch immediately before or during its mixing, for the purpose of entraining air.

GENERAL REQUIREMENTS

3.1 At the request of the purchaser, the manufacturer shall state in writing that the air-entraining admixture supplied for use in the work is essentially identical in concentration, composition, and performance, to the air-entraining admixture tested under this specification.

NOTE 1 —It is recommended that, whenever practicable, tests with the air-entraining admixture be made using all of the ingredients of the concrete proposed for the specific work because the effect produced by the air-entraining admixture may vary with the properties of the other ingredients of the concrete

3.2. At the request of the purchaser, the manufacturer shall state in writing the chloride content of the air-entraining admixture and whether or not chloride was added during its manufacture

NOTE 2 —Admixtures that contain chlorides may accelerate corrosion of embedded metals

3.3 At the request of the purchaser, the manufacturer shall recommend appropriate test procedures, such as infra-red spectrophotometry, pH value and solids content, for establishing the equivalence of materials from different lots or different portions of the same lot.

OPTIONAL UNIFORMITY REQUIREMENTS

4.1 Requirements for uniformity of a lot, or of different lots from the same source, may be established by agreement between the purchaser and manufacturer. It is expected that such requirements will in most cases be based on test procedures recommended by the manufacturer as being appropriate for a specific air-entraining admixture.

PERFORMANCE REQUIREMENTS

5.1 The air-entraining admixture shall conform to the following requirements:

5.1.1 *Bleeding.*—The bleeding of concrete made with the admixture under test shall not exceed that of concrete made with the reference admixture by more than 2 percentage points, the bleeding being computed as a percentage of the net amount of mixing water in each concrete. The net mixing water is the water in excess of that present as absorbed water in the aggregates.

5.1.2 *Time of Setting.*—Both the initial and final times of setting of concrete containing the admixture under test shall not deviate from that of the concrete made with the reference admixture by more than ± 1 hr and 15 min.

5.1.3 *Compressive Strength.*—The compressive strength at any test age of concrete containing the admixture under test shall be not less than 90 per cent of that of similar concrete containing the reference admixture at the same test age.

5.1.4 *Flexural Strength* —The flexural strength at any test age of concrete contain-

ing the admixture under test shall be not less than 90 per cent of that of similar concrete containing the reference admixture at the same test age (Note 3).

5.1.5 *Resistance to Freezing and Thawing.*—The relative durability factor of concrete containing the admixture under test shall be not less than 80. The relative durability factor shall be calculated as follows:

$$DF \text{ (or } DF_1) = \frac{PN}{300}$$

$$RDF = \frac{DF}{DF_1} \times 100$$

where:

DF = durability factor of the concrete containing the admixture under test,
DF_1 = durability factor of the concrete containing the reference admixture,
P = relative dynamic modulus of elasticity in percentage of the dynamic modulus of elasticity at zero cycles (values of P will be 60 or greater),
N number of cycles at which P reaches 60 per cent, or 300 if P does not reach 60 per cent prior to the end of the test (300 cycles), and
RDF = relative durability factor.

5.1.6 *Length Change.*—The length change on drying of concrete containing the admixture under test shall not be greater than 120 per cent of that of similar concrete containing the reference admixture when compared after 14 days of drying. If the length change of the reference concrete at the end of 14 days of drying is less than 0.030 per cent, the increase in length change on drying of the concrete containing the admixture under test shall be not more than 0.006, expressed as a percentage change in length, greater than that of the reference concrete.

NOTE 3.—Applicable only when specifically required by the purchaser for use in structures where flexural strength, or volume change may be of critical importance

SAMPLING

6.1 Opportunity shall be provided the purchaser for careful sampling and inspection, either at the point of manufacture or at the site of the work, as may be specified by the purchaser.

6.2 Samples shall be either 'grab' or 'composite' samples, as specified or required by this specification. A grab sample is one obtained in a single operation. A composite sample is one obtained by combining three or more grab samples.

6.3 For the purpose of this specification, it is recognized that samples will be taken for the two following reasons:

6.3.1 *Quality Tests.*—A sample taken for the purpose of evaluating the quality of a source or lot of admixture will be required to meet all the applicable requirements of this specification. Samples used to determine conformance with the requirements of this specification shall be composites of grab samples taken from sufficient locations to insure that the composite sample will be representative of the lot.

6.3.2 *Uniformity Tests.*—A sample taken for the purpose of evaluating the uniformity of a single lot or of different lots from the same source will generally be subjected to a limited number of tests as the result of agreement between the purchaser and manufacturer (see 4 Optional Uniformity Requirements). Such samples shall be composite samples from individual lots when different lots from the same source are being compared. When the uniformity of a single lot is being determined, grab samples shall be used.

6.4 *Liquid Air-Entraining Admixtures.*—Liquid admixtures shall be agitated thoroughly immediately prior to sampling. Grab samples taken for quality or uniformity tests shall represent not more than 2500 gal (approx. 10 m^3) of admixture and shall have a volume of at least one qt (approx. 1000 cm^3). A minimum of three grab samples shall be taken. Composite samples shall be prepared by thoroughly mixing the grab samples selected and the resultant mixture sampled to provide at least one gal. for quality tests. Grab samples shall be taken from different locations well distributed throughout the quantity to be represented.

6.4.1. Admixtures in bulk storage tanks shall be sampled equally from the upper, intermediate, and lower levels by means of drain cocks in the sides of the tanks or a weighted sampling bottle fitted with a stopper that can be removed after the bottle is lowered to the desired depth.

6.4.2 Samples shall be packaged in impermeable, airtight containers that are resistant to attack by the admixture.

6.5 *Non-Liquid Air-Entraining Admixtures.*—Grab samples taken for quality or uniformity tests shall represent not more than 2 tons (2 metric tons) of admixture and shall weigh at least 2 lb (1 kg). A minimum of four grab samples shall be taken. Composite samples shall be prepared by thoroughly mixing the grab samples selected and the resultant mixture sampled to provide at least 5 lb (2.3 kg) for the composite sample. Grab samples shall be taken from different locations well distributed throughout the quantity to be represented.

6.5.1. Samples of packa[illegible] admixtures shall be obtained by means of a tube sampler as described in AASHO Met[illegible] 127 Sampling Hydraulic Cement.

6.5.2 Samples shall be packaged in moisture-proof, airtight containers.

6.6 Samples shall be thoroughly mixed before testing to assure uniformity. When recommended by the manufacturer, the entire sample of a non-liquid admixture shall be dissolved in water prior to testing.

METHODS OF TEST

7.1 The properties enumerated in 5. Performance Requirements shall be determined in accordance with AASHO Method T 157 Testing Air-Entraining Admixtures for Concrete. It is recommended that, whenever practicable, tests be made in accordance with Section 2.4 of Method T 157 using the cement proposed for the specific work.

REJECTION

8.1 The air-entraining admixture may be rejected if it fails to meet any of the applicable requirements of this specification.

8.2 After completion of tests, an admixture stored at the point of manufacture for more than 6 months prior to shipment, or an admixture in local storage in the hands of a vendor for more than 6 months, may be retested before use and may be rejected if it fails to conform to any of the applicable requirements of these specifications.

8.3 Packages or containers varying more than 5 per cent from the specified weight or volume may be rejected. If the average weight or volume of 50 packages or containers taken at random is less than that specified, the entire shipment may be rejected.

PACKAGING AND MARKING

9.1 The proprietary name of the air-entraining admixture and the net quantity in pounds or gallons shall be plainly indicated on the packages or containers in which the admixture is delivered. Similar information shall be provided in the shipping advices accompanying packaged or bulk shipments of admixtures.

———o———

Standard Specification for

High-Strength Bolts For Structural Steel Joints, Including Suitable Nuts and Plain Hardened Washers

AASHO DESIGNATION: M 164–68

(ASTM DESIGNATION: A 325–68)

SCOPE

1.1 This specification[1] covers the chemical and mechanical requirements of quenched and tempered steel bolts, ½ in. (12.7mm) to 1½ in. (38.1mm), inclusive in diameter, made of medium carbon steel. These bolts, commonly known as "high-strength structural bolts,"

[1] For ASME Boiler and Pressure Vessel Code applications see related Specification SA-325 in Section II of that Code.

are intended for use in structural joints that are covered under requirements of the Specifications for Structural Joints Using AASHO M 164 or ASTM A 490 Bolts,[2] issued by the Research Council on Riveted and Bolted Structural Joints of the Engineering Foundation.

NOTE. 1.—Bolts for general applications are covered by Specification for Quenched and Tempered Steel Bolts and Studs (ASTM A 449).

1.2 Suitable nuts and plain hardened washers are also covered by this specification.

1.3 This specification provides that heavy hex structural bolts and heavy semi-finished hexagon nuts shall be furnished unless other dimensional requirements are stipulated in the purchase inquiry and order. Dimensions of washers are limited to those in the Specification for Structural Joints Using AASHO M 164 or ASTM A 490 bolts cited in 1.1.

MATERIALS AND MANUFACTURE

2.1 Steel for bolts, nuts, and washers shall be made by the open-hearth, basic-oxygen, or electric-furnace process.

2.2 Bolts shall be heat treated by quenching in a liquid medium from above the transformation temperature and then tempering by reheating to a temperatuer of at least 427 C (800 F)

2.3 Threads of bolts may be cut or rolled.

2.4 Washers shall preferably be through quenched and tempered. Alternatively, carburized, quenched, and tempered washers may be furnished.

CHEMICAL REQUIREMENTS

3.1 Bolts, nuts, and washers shall conform to the requirements as to chemical composition prescribed in Table 1

3.2 Check analyses may be made by the purchaser from finished material representing each lot of bolts, nuts, or washers. The chemical composition thus determined shall conform to the requirements prescribed in 3.1 except that resulfurized material is not subject to rejection based on check analysis for sulfur.

MECHANICAL REQUIREMENTS

4.1 Bolts shall not exceed the maximum hardness specified in Table 2. Bolts that are too short for tension testing shall meet or exceed the minimum hardness specified in Table 2.

4.2 Bolts other than those too short for tension testing shall be subject to tension tests specified in 6.3 and 6.4.

4.3 Bolts 1⅛ in. (28.6mm) and under in diameter shall be tested in full size and shall meet the requirements for tensile strength and proof load or alternate proof load specified in Table 3.

4.4 Bolts 1¼, 1⅜, and 1½ in. in diameter, shall preferably be tested in full size and when so tested shall meet the requirements for tensile strength and proof load or

TABLE 1
Chemical Requirements

Element	Bolts		Nuts		Washers			
					Quenched and Tempered		Carburized	
	Ladle Analysis	Check Analysis	Ladle Analysis	Check Analysis	Ladle Analysis	Check Analysis	Ladle Analysis	Check Analysis
Carbon, min, per cent	0.30	0.27	...	.	...		[a]	
Manganese, min, per cent	0.50	0.47			...		1.00 max	1.00 max
Phosphorus, max, per cent	0.04	0.048	0.12	0.128	0.04	0.05	0.04	0.05
Sulfur, max, per cent	0.05	0.058	0.23		0.05	0.06	0.05	0.06

[a] The stock used for manufacture of carburized washers shall not contain over 0.25 per cent carbon.

[2] Published by American Institute of Steel Construction, New York, N.Y.

TABLE 2
Hardness Requirements for Bolts

Bolt Size, in.	Hardness Number			
	Brinell		Rockwell C	
	Min	Max	Min	Max
½ to 1, incl (12.7 to 25.4 mm)	241	331	23	35
1⅛ to 1½, incl (28.6 to 38.1 mm)	223	293	19	31

TABLE 3
Tensile Requirements for Full-Size Bolts

Bolt Size, Threads per Inch and Series Designation	Stress Area,[a] sq in.	Tensile Strength[b] min, lb	Proof Load[b] Length Measurement Method, lb	Alternate Proof Load, Yield Strength Method, min, lb[b]
Column 1	Column 2	Column 3	Column 4	Column 5
½-13 UNC	0.142	17 050	12 050	13 050
⅝-11 UNC	0.226	27 100	19 200	20 800
¾-10 UNC	0.334	40 100	28 400	30 700
⅞-9 UNC	0.462	55 450	39 250	42 500
1-8 UNC	0 606	72 700	51 500	55 750
1⅛-7 UNC	0 763	80 100	56 450	61 800
1⅛-8 UN	0.790	82 950	58 450	64 000
1¼-7 UNC	0.969	101 500	71 700	78 500
1¼-8 UN	1.000	105 000	74 000	81 000
1⅜-6 UNC	1.155	121 300	85 450	93 550
1⅜-8 UN	1.233	129 500	91 250	99 870
1½-6 UNC	1.405	147 500	104 000	113 800
1½-8 UN	1.492	156 700	110 400	120 850

[a] The stress area is calculated as follows

$$A_s = 0.7854\left(D - \frac{0.9743}{n}\right)^2$$

where:
A_s = stress area,
D = nominal bolt size, and
n = threads per inch.

[b] Loads tabulated are based on the following:

Bolt Size	Column 3	Column 4	Column 5
½ to 1 incl	120 000 psi	85 000 psi	92 000 psi
1⅛ to 1½ incl	105 000 psi	74 000 psi	81 000 psi

alternate proof load specified in Table 3, but when equipment of sufficient capacity for such tests is not available, the bolts shall meet the requirements for machined specimens specified in Table 4.

4.5 Nuts 1⅛ in. and under in size shall meet the proof load of nuts specified in Table 5. Their hardness shall not exceed 352 Brinell hardness.

4.6 Nuts 1¼, 1⅜, and 1½ in. in size shall preferably meet the requirements for load specified in Table 5, but when equipment of sufficient capacity for such tests is not available, they shall meet the hardness requirements specified in Table 5. Their hardness shall not exceed 352 Brinell hardness.

4.7 Quenched and tempered washers shall have a Rockwell hardness of C38 to C45. Carburized, quenched, and tempered washers shall have the equivalent Rockwell A hardness of A69 to A73 or R15N hardness of 15N79 to 15N83, and shall be carburized to a minimum depth of 0.015 in. (0.38 mm)

DIMENSIONS

5.1 Unless otherwise specified, bolts shall be full-body bolts conforming to the dimensions for heavy hexagon structural bolts specified in the ANS Standard for Square and Hex Bolts and Screws ANS (B18.2.1).

TABLE 4
Tensile Requirements for Specimens Machined from Bolts

Bolt Size, in.	Tensile Strength, min, psi	Yield Strength (0.2 per cent Offset), min, psi	Elongation in 2 in., min, per cent	Reduction of Area, min, per cent
1¼, 1⅜ and 1½	105 000	81 000	14	35

TABLE 5
Proof Load and Hardness Requirements for Nuts

Nut Size, Threads per Inch, and Series Designation	Proof Load min, lb[a]	Brinell Hardness
½-13 UNC	20 450	
⅝-11 UNC	32 550	
¾-10 UNC	48 100	
⅞-9 UNC	66 550	
1-8 UNC	87 250	
1⅛-7 UNC	109 900	
1⅛-8 UN	113 800	
1¼-7 UNC	139 500	143
1¼-8 UN	144 000	143
1⅜-6 UNC	166 300	143
1⅜-8 UN	177 600	143
1½-6 UNC	202 300	143
1½-8 UN	214 800	143

[a] Based on 144,000 psi on stress area of test mandrel or test bolt

5.2 Unless otherwise specified, nuts shall conform to the dimensions for heavy semifinished hexagon nuts specified in the ANS Standard for Square and Hex Nuts (ANS B18.2.2).

5.3 Threads shall be the Unified Coarse Thread Series as specified in the ANS Standard for Unified Screw Threads (ANS B1.1), and shall have Class 2A tolerances for bolts and Class 2B tolerances for nuts. When specified, 8 pitch thread series may be used on bolts over 1 in. in diameter.

5.4 Dimensions of washers shall conform to those shown in the latest issue of the Specifications for Structural Joints Using AASHO M 164 Bolts issued by the Research Council on Riveted and Bolted Structural Joints of the Engineering Foundation. Unless otherwise specified, circular washers shall be furnished.

METHODS OF TEST

6.1 Tests shall be conducted in accordance with Supplement III of the Methods and Definitions for Mechanical Testing of Steel Products (ASTM A 370).

6.2 For tension tests a proof load determination is preferred conducted in accordance with Method 1, Length Measurement, of Supplement III of A 370.

6.3 Bolts tested in full size shall be tested in accordance with the Wedge Test method described in Section F 2(c), Supplement III of A 370. Fracture shall be in the body or threads of the bolt, without any fracture at the junction of the head and body.

6.4 The speed of testing as determined with a free-running cross head shall be a maximum of ⅛ in. per min for the bolt proof-load determination, and a maximum of 1 in. per min for the bolt tensile-strength determination and nut proof-load determination.

NUMBER OF TESTS AND RETESTS

7.1 The requirements of this specification shall be met in continuous mass production for stock, and the manufacturer shall make sample inspections to ensure that the product conforms to the specified requirements. Additional tests of individual shipments of material are not ordinarily contemplated. Individual heats of steel are not identified in the finished product.

7.2 When specified in the order, the manufacturer shall furnish a test report certified to be the last completed set of mechanical tests for each stock size in each shipment.

7.3 When additional tests are specified in the purchase order, a lot, for purposes of selecting test samples, shall consist of all material offered for inpection at one time that has the following characteristics:

(1) One type of item, that is bolts, nuts, or washers.

(2) One nominal size, and

(3) One nominal length of bolts.

7.4 From each lot, the number of tests of each required property shall be as follows:

Number of Pieces in Lot	Number of Specimens
800 and under	1
801 to 8000	2
8001 to 22,000	3
Over 22,000	5

7.5 If any test specimen shows defective machining, it may be discarded and another specimen substituted.

7.6 Should any specimen fail to meet the requirements of any specified test, double the number of specimens from the same lot shall be tested for this property, in which case all of the additional specimens shall meet the specifications.

MARKING

8.1 Bolt heads shall be marked with three radial lines 120 deg apart, and shall also be marked to identify the manufacturer. The heads of heavy hexagon structural bolts shall be marked A325, in which case, at his option, the manufacturer may then omit the 3 radial line marking. Heavy semifinished hexagon nuts shall be marked on one face with three similar circumferential markings, 120 deg. apart. Markings may be either raised or depressed at the option of the manufacturer.

INSPECTION

9.1 If the inspection described in 9.2 is required by the purchaser, it shall be specified in the inquiry and contract or order.

9.2 The inspector representing the purchaser shall have free entry, at all times while work on the contract of the purchaser is being performed, to all parts of manufacturer's works that concern the manufacture of the material ordered. The manufacturer shall afford the inspector all reasonable facilities, without charge, to satisfy him that the material is being furnished in accordance with this specification. All tests (except check analysis) and inspection shall be made at the place of manufacture prior to shipment, unless otherwise specified, and shall be so conducted as not to interfere unnecessarily with the operation of the works.

REJECTION

10.1 Unless otherwise specified, any rejection based on tests specified herein shall be reported to the manufacturer within thirty working days from the receipt of samples by the purchaser.

NOTE 2.—Heavy semifinished hexagon nuts conforming to requirements for Grade 2 or 2H of the Specifications for Carbon and Alloy Steel Nuts for Bolts for High-Pressure and High-Temperature Service (ASTM A 194) [3] may be supplied as an alternate. Such nuts are marked with the grade designating symbol 2 or 2H and the manufacturer's symbol.

[3] Book of ASTM Standards, Part I.

———— o ————

Standard Specification for

Structural Plate for Pipe, Pipe-Arches, and Arches

AASHO DESIGNATION: M 167–70

SCOPE

1.1 This specification covers galvanized corrugated steel structural plates and fasteners for use in the construction of pipe, pipe-arches, arches, underpasses and special shapes for field assembly.

NOTE 1.—The values stated in U.S. customary units are to be regarded as standards. The metric equivalent of U.S. customary units given in the standard may be approximate.

APPLICABLE DOCUMENTS

2.1 The following documents form a part of this specification to the extent specified herein. Unless otherwise indicated the latest issue in effect shall apply.

2.1.1 AASHO T 65, Weight of Coating on Zinc Coated (Galvanized) Iron or Steel Articles.

2.1.2 ASTM: A 153,[2] Specification for Zinc Coating (Hot Dip) on Iron and Steel Hardware.

2.1.3 ASTM A 307,[1] Specification for Low-Carbon Steel Externally and Internally Threaded Standard Fasteners.

2.1.4 ASTM A 370,[2] Methods and Definitions for Mechanical Testing of Steel Products.

2.1.5 ASTM E 376,[2] Measuring Coating Thickness by Magnetic-Field or Eddy-Current (Electromagnetic) Test Methods.

2.1.6 ASTM A 569,[2] Specification for Hot Rolled Carbon Steel Sheets, Commercial Quality.

2.1.7 ASTM A 449,[1] Specification for Quenched and Tempered Steel Bolts and Studs.

2.1.8 ASTM A 563,[1] Specification for Carbon Steel Nuts.

2.1.9 Federal Specification TT-P-641,[3] Primer Coating Zinc Dust-Zinc Oxide (for Galvanized Surfaces).

2.1.10 AASHO M 120, Slab Zinc.

2.1.11 ANSI (American National Standards Institute) Standard B 18.2.1 for heavy hex bolts.

2.1.12 ANSI Standard B 18.2.2 for heavy hex nuts.

DESCRIPTION OF TERMS AND DEFINITIONS

3.1 Description of terms for shape of conduit.

3.1.1 *Pipe.*—A full circular shape.

3.1.2 *Pipe, Vertically Elongated.*—An elliptical shape with the vertical diameter approximately 5 per cent greater than the nominal diameter.

3.1.3 *Pipe, Horizontal Ellipse.*—An elliptical shape with the horizontal diameter approximately 20 per cent greater than the nominal diameter.

3.1.4 *Pipe Arch.*—An arch shape with an approximate semi-circular crown, small radius corners and large radius invert.

3.1.5 *Vehicular Underpass.*—A high arch shape with an approximate semi-circular crown, large radius sides, small radius corners between sides and invert and large radius invert.

---

[1] Book of ASTM Standards, Part 4.
[2] Book of ASTM Standards, Part 3.
[3] Can be obtained from Superintendent of Documents, U. S. Government Printing Office, Washington, D. C. 20402.

3.1.6 *Arch.*—A part-circle shape of not more than 180°.

3.1.7 *Special Shape.*—A shape, other than described above, suitable for fabrication with structural plates.

3.2 Definitions.

3.2.1 *Manufacturer.*—The producer of the flat plate and accessories.

3.2.2 *Fabricator.*—The producer of the components for the finished product.

3.2.3 *Purchaser.*—The purchaser of the finished product.

3.2.4 *Plate.*—Sheet or plate used to fabricate structural plates.

GENERAL REQUIREMENTS FOR DELIVERY

4.1 Material furnished under this specification shall conform to the applicable requirements of the latest edition of the documents listed under Section 2 of this specification unless otherwise provided herein.

4.2 Material shall be ordered to the specified thicknesses shown in Table 3.

BASIS OF PURCHASE

5.1 Orders for plates, shapes and fasteners under this specification shall include the following information as required to describe adequately the desired material.

5.1.1 Number of structures.

5.1.2 Dimensions: Span and rise, or diameter, thickness, and total length required of each structure.

5.1.3 Description: Pipe, pipe-arch, arch, etc.

5.1.4 AASHO Designation number and date of issue.

5.1.5 End treatment, bevel, skew or other special provision if required by the project plans or specifications.

5.1.6 Special requirements.

NOTE: Typical ordering descriptions are as follows:

Structural plates and fasteners required for two 180" diameter structural plate pipe, AASHO M 167, 0.109 inches thick, each 140-foot nominal center line length with end treatment as shown in the plans.

Structural plates and fasteners required for one 12'-8" span by 8'-1" rise structural plate pipe-arch, AASHO M 167, 0 138 inches thick, 88 foot nominal bottom centerline length with square ends.

MANUFACTURE—BASE METAL

6.1 The base metal shall be made by any of the following processes: open hearth, basic oxygen, or electric furnace.

CHEMICAL COMPOSITION

7.1 *Cast Analysis.*—The base metal cast analysis shall conform to the chemical requirements of Table 1. The requirements of this specification shall be met in continuous mass production during which the manufacturer has made analysis of individual heats so as to ensure that material is controlled within the specified limits.

TABLE 1
Chemical Composition by Cast Analysis
Copper Steel

Element	Composition Per cent
Carbon, max.	...
Manganese, max.	...
Phosphorous, max.	...
Sulfur, max.	0.05
Silicon, max.	...
Copper, min.	0.20
Sum of first 5 elements, max.	0.70

A tolerance under the min. limit for copper shall not exceed 0.02 per cent by check analysis.

BASE METAL MECHANICAL REQUIREMENTS

8.1 The mechanical properties of the black plates for the flat material prior to corrugating shall be as follows:

Minimum Yield Point, psi	Minimum Tensile Strength, psi	Minimum Elongation in 2 inches (51 mm)
28,000 (1969 kg/cm²)	42,000 (2953 kg/cm²)	30%

ZINC COATING

9.1 The zinc used for the coating shall be as prescribed in AASHO Designation M 120, and shall be at least equal to the grade designated as "Prime Western."

9.2 *Weight of Coating.*—Plates shall be zinc coated in accordance with the following:

Specified Thickness		Average Coating*	
Inches	(mm)	Oz./Ft.²	(g/m²)
.109	(2.77)	2.0	(610)
.138	(3.51)	2.0	(610)
.168	(4.27)	2.0	(610)
.188	(4.78)	3.0	(915)
.218	(5.54)	3.0	(915)
.249	(6.32)	3.0	(915)
.280	(7.11)	3.0	(915)

* Total amount on both surfaces of the sheet.

RANDOM SAMPLING BY THE PURCHASER

10.1 *Check Analysis for Copper.*—Base metal check analysis for copper may be made by the Purchaser.

10.2 *Mechanical Testing.*—Tests for mechanical properties may be made by the Purchaser. Testing of flat material shall be in accordance with ASTM Designation A 370.

10.3 *Weight of Coating.*—The Purchaser may make random check of coating weights to assure compliance with minimum value specified in Section 10.3.1. The weight may be converted from the sum of the readings on both surfaces of the plate by a magnetic coating thickness gage suitably checked and demonstrated for accuracy (Note 2) (1 mil = .594 oz./ft.²). In case of dispute additional samples shall be tested in accordance with AASHO Method T 65, Weight of Coating on Zinc Coated (Galvanized) Iron or Steel Articles.

NOTE 2. Several magnetic and electromagnetic types of coating thickness gages are commercially available and are satisfactory basis for acceptance when properly calibrated just prior to inspection use (See ASTM E 376)

10.3.1 If any one specimen shows values less than those given in the following, the lot shall be rejected:

Specified Thickness		Minimum Check Limit Single Specimen	
Inches	(mm)	Oz./Ft.²	(g/m²)
.109	(2.77)	1.8	(550)
.138	(3.51)	1.8	(550)
.168	(4.27)	1.8	(550)
.188	(4.78)	2.7	(824)
.218	(5.54)	2.7	(824)
.249	(6.32)	2.7	(824)
.280	(7.11)	2.7	(824)

FABRICATION

11.1 *Fabrication.*—Structural plates furnished shall be fabricated from flat sheets or plates, corrugated in accordance with Section 11.2, punched for bolted lap seams in accordance with Section 11.3, curved to the required radius and galvanized to the coating weights specified in Section 9.

11.2 *Corrugations.*—The corrugations shall form smooth continuous curves and tangents. The radii of curvature of the corrugations shall be at least one-half the depth of the corrugations. Corrugations shall form circumferential rings (complete or partial) about the axis of the structure. The dimensions of the corrugations shall be in accordance with Table 2. The depth of corrugations should not underrun those specified by more than 5 per cent.

TABLE 2
Corrugation Dimensions in Inches

Depth		Pitch min.		Pitch max.	
Inches	(mm)	Inches	(mm)	Inches	(mm)
2	(51)	5¾	(146)	6¼	(159)

11.3 *Bolt holes.*—The bolt holes shall be punched so that all plates having like dimensions, curvature, and same number of bolts per foot of seam shall be interchangeable. To provide for four bolts per foot of seam, holes along the edge of the plates that will form longitudinal seams in the finished structure shall be staggered in rows two inches (51 mm) apart with holes in one row in the valleys and holes in the other row in the crest of the corrugations. Bolt holes along the edges of the plates that will form the circumferential seams in the finished structure shall provide for a bolt spacing of not more than 10 inches (254.0 mm). The minimum distance from the center of a hole to the edge of a plate shall be 1¾ times the diameter of the bolt.

11.3.1 The diameter of the bolt holes in the longitudinal seams, except those at the plate corners, shall not exceed the bolt diameter by more than ⅛ inch (3 mm). The diameter of the bolt holes in circumferential seams including those at the plate corners shall be punched to not exceed the bolt diameter by more than ¼ inch (6 mm). Holes shall be provided as required, for connecting the headwall anchors, bearings and miscellaneous attachments.

11.4 *Special Plates.*—Plates for forming skewed ends, beveled ends or deflections of structures shall be accurately cut to fit the order plans Cut edges of plates shall be free from notches, gouges, oxide or burrs and shall present a workmanlike finish. Legible identification shall be placed on each part plate to designate its proper position in the finished structure and referenced to the approved erection drawings.

ACCESSORIES

12.1 *Assembly Bolts.*—All bolts shall be ¾-inch (19 mm) diameter meeting the provisions of ASTM Designation A 449. Nuts shall conform to ASTM Designation A 563, Grade C. Bolts and nuts shall be hot-dip galvanized in accordance with the requirements of ASTM Designation A 153. Except as provided elsewhere in this section, bolt and nut dimensions shall conform to the current requirements of The American National Standards Institute B 18.2.1 for heavy hex bolts and B 18 2.2 for heavy hex nuts with the exception that the bearing surface of both bolts and nuts shall be symmetrically shaped to a one-inch radius spherical surface. The maximum height of the wrench flats on bolts and nuts shall be within the limits specified for height and nut thickness for heavy hex bolts and nuts in B 18.2.1 and B 18.2.2 respectively. The number of bolts of each size and length furnished shall be 2 per cent plus 2 in excess of the theoretical number required to field erect the structure or structures. Bolt lengths shall be such as to result in at least "full nuts" when tightened in place. There shall be at least four bolts per foot (305 mm) of longitudinal seam. If specified, 6 or 8 bolts per foot of longitudinal seam shall be furnished with plates 0.28 inches (7 mm) thick.

12.2 Other fasteners which meet the chemical and mechanical requirements of A 449 and which have body diameter and bearing areas under the head and nut not less than those provided by the bolt and nut described above and which provide a comparable fit with the corrugations may be used.

12.3 *Headwall Anchorage.*—Bolt material shall conform to ASTM Designation A 307. Bolts shall have a nominal ¾ inch (19 mm) thread. Bolts shall be galvanized after fabrication to meet current ASTM Designation A 153. Nuts shall conform to ASTM Designation A 563, Grade C, and be hot-dip galvanized to meet the requirements to ASTM Designation A 153.

12.4 *Bearings for arches.*—When specified, metal bearings for arches shall be cold-formed channels conforming to ASTM Designation A 415 not less than 3/16-inch (5 mm) in thickness, galvanized in accordance with Section 9. Anchorage of bearings to foundation shall be fabricated as shown on the plans, with spacing at not more than 24 inches (610 mm)

on centers. Bolt holes shall be punched at not more than 24 inches (610 mm) on centers in the vertical leg of bearings to match corresponding bolt holes in the bottom arch plates. Bolts for connecting arch plates to bearings shall conform to Section 12.1.

TABLE 3
Thickness Zinc Coated Plates

Specified Thickness		Minimum Thickness (1)	
Inches	(mm)	Inches	(mm)
.109	(2.77)	.097	(2.47)
.138	(3.51)	.126	(3.21)
.168	(4.27)	.156	(3.97)
.188	(4.78)	.176	(4.48)
.218	(5.54)	.206	(5.24)
.249	(6.32)	.237	(6.02)
.280	(7.11)	.268	(6.81)

(1) No limit on over thickness.

REWORK AND REPAIR

13.1 Units on which the spelter coating has been damaged shall be regalvanized or the surface prepared and painted with two coats of zinc dust-zinc oxide paint conforming to Federal Specification TT-P-641.

DIMENSIONS AND TOLERANCES

14.1 *Thickness.*—Thicknesses shall conform to those shown in Table 3 and shall be measured on tangents of the corrugations.

WORKMANSHIP AND QUALITY LEVEL REQUIREMENTS

15.1 It is the essence of these specifications that plates and fasteners shall show careful finished workmanship in all particulars.

15.2 *Coating Adherence.*—The coating adherence shall be such that no peeling or flaking occurs during normal handling.

MARKING

16.1 Each plate shall be identified by showing the following:

16.1.1 Name of plate fabricator.

16.1.2 Specified galvanized plate thickness.

16.1.3 Specified weight of coating.

16.1.4 Identification symbols showing sheet manufacturer and heat number or lot number, and

16.1.5 AASHO Designation M 167.

16.2 The marking shall be so placed that when the structure is erected the identification will appear on the inside.

INSPECTION

17.1 The fabricator is responsible for making such tests as he deems necessary to assure compliance with this specification.

17.2 Test results including chemical composition and mechanical properties shall be maintained by the base metal manufacturer for 7 years and the weight of coating or other tests by the fabricator for 7 years.

CERTIFICATION

18.1 No metal should be accepted under these specifications and no bids should be considered for the materials above described until after the base metal manufacturer's certificate and guarantee have been passed upon by the fabricator and accepted. This certificate and guarantee shall be filed by the fabricator and show the typical average

analysis and the minimum specified mechanical properties for the base material for structural plate. Test results upon which the certificate and guarantee are based shall be maintained as specified in paragraph 17.2 and shall be available for inspection by the purchaser upon request.

18.2 *Fabricator's Certificate.*—The Fabricator of the structural plate identified by his mark should file with the purchaser a certificate setting forth the name of the fabricator, the base metal manufacturer, the specified chemical composition, and a typical or average analysis showing the per cent carbon, manganese, phosphorus, sulfur, silicon, copper and any other elements specified and the minimum specified mechanical properties for the base metal. The certificate shall be sworn to for the fabricator by a person having legal authority to bind the company. Mismarking or other misrepresentation by the fabricator will each be considered a sufficient reason to discontinue acceptance under these specifications. Notice sent to the fabricator by the purchaser of the discontinuance of acceptance will be considered to be notice to all companies which handle that particular fabricator's product.

18.3 *Fabricator's Guarantee.*—The fabricator of the structural plate shall submit with the certificate a guarantee providing that all structural plate furnished shall conform to the specification requirements, and shall bear his identification mark. When not in conformity with the specified analysis, mechanical properties, sheet thickness or spelter coating, the cost to the fabricator will be limited to the replacement of the material only. The guarantee should be so worded as to remain in effect so long as the fabricator continues to furnish the material

18.4 *Certificate of Compliance.*—Each shipping document shall include a notation certifying that the material described is in accordance with the fabricator's certificate and guarantee previously filed with the purchaser.

———— o ————

Standard Specification for

Structural Timber, Lumber, and Piling

AASHO DESIGNATION: M 168-65

SPECIES OF WOODS

1.1 The standard commercial and botanical names of the species of woods recognized in these specifications are described as follows:

Standard Commercial Name	Botanical Name
Ash, White	Fraxinus americana
Beech	Fagus grandifolia
Birch	Betula lutea
Cedar, Incense	Libocedrus decurrens
Cedar, Western Red	Thuja plicata
Chestnut	Castanea dentata
Cypress, Southern, Coast Type	Taxodium distichum
Cypress, Southern, Inland Type	Taxodium distichum
Elm, Rock	Ulmus racemosa
Elm, Soft	Ulmus americana
Fir, Douglas	Pseudotsuga menziesii
Fir, Douglas, Coast Region	Pseudotsuga taxfolia (Coast)
Fir, Douglas, Inland Region	Pseudotsuga taxifolia (Inter-mountain)
Fir, White	Abies lasiocarpa
Gum, Black and Red	Nyssa sylvatica
Hemlock, Eastern	Tsuga canadensis
Hemlock, West Coast	Tsuga heterophylla
Hickory, includes:	
	Hicoria laciniosa
	Hicoria alba
	Hicoria glabra
	Hicoria ovata
Larch	Larix occidentalis
Maple, Hard	Acer saccharum
Oak, Red, includes:	
Red Oak	Quercus borealis and Quercus borealis maxima
Black Oak	Quercus velutina
Southern Red Oak	Quercus rubra
Water Oak	Quercus nigra
Willow Oak	Quercus phellos
Scarlet Oak	Quercus coccinea
Pin Oak	Quercus palustris
Shumard Red Oak	Quercus shumardii
Swamp Red Oak	Quercus rubra pagodaefolia
Blackjack Oak	Quercus marilandica
Laurel Oak	Quercus laurifolia
Texas Red Oak	Quercus texana
Oak, White, includes:	
White Oak	Quercus alba
Chestnut Oak	Quercus montana
Post Oak	Quercus stelata
Bur Oak	Quercus macrocarpa
Overcup Oak	Quercus lyrata
Swamp Chestnut Oak	Quercus prinus
Swamp White Oak	Quercus bicolor
Live Oak	Quercus virginiana
Chinquapin Oak	Quercus muehlenbergii
Pecan	Hicoria cordiformis
	Hicoria myristicaeformis
	Hicoria pecan
	Hicoria aquatica
Pine, Idaho White (Western)	Pinus monticola
Pine, Lodge pole	Pinus contorta
Pine, Red (Norway)	Pinus resinosa
Pine, Ponderosa	Pinus ponderosa
Pine, Southern, includes:	
Loblolly Pine	Pinus taeda
Pitch Pine	Pinus rigida
Pond Pine	Pinus serotina
Shortleaf Pine	Pinus echinata
Slash Pine	Pinus caribaea
Pine, Southern Longleaf	Pinus palustris
Pine, Sugar	Pinus lambertiana
Poplar, Yellow	Liriodendron tulipifera
Redwood	Sequoia sempervirens
Spruce, Eastern, includes:	
Black Spruce	Picea mariana
Red Spruce	Picea rubra
White Spruce	Picea glauca
Spruce, Englemann	Picea englemannii
Spruce, Sitka	Picea sitchensis
Tupelo	Nyssa aquatica

LIMITATION OF USE

2.1 Structural lumber and timber shall not be used in exposed permanent structures without pressure impregnation of a preservative, except that with adequate heartwood content, the naturally decay-resistant species may be used without such treatment.

GRADING OF YARD LUMBER

3.1 Softwood yard lumber shall be graded in accordance with grading rules, adopted by a lumber grading or inspection bureau or agency recognized as being competent, which conform to the basic provisions of Simplified Practice Recommendation No. 16-53, American Lumber Standard for Soft Wood Lumber, U.S. Department of Commerce.

3.2 Hardwood yard lumber shall be graded in accordance with the rules of the National Hardwood Lumber Association or other equivalent rules.

HEWN AND ROUND TIMBERS

4.1 Hewn timbers used in place of sawed timbers shall conform in all respects to the grading rules for structural timber.

4.2 Round timbers used in place of sawed timbers shall be of a quality equal to that hereinafter specified for timber piles. The effective size of a round timber shall be considered the same as that of a square timber having sectional dimensions equal to those of the inscribed square of the round timber at the critical section.

4.3 Hewn and round timbers shall not be used except when specified or approved by the Engineer.

GRADING OF SOLID SAWN STRUCTURAL TIMBER

GENERAL

5.1 Structural timber used as a permanent part of the structure shall be graded, for the grade selected, in accordance with the grading rules adopted by a lumber grading or inspection bureau or agency recognized as being competent, which conform to the basic provisions of the "American Lumber Standards."

GRADE TIMBER

6.1 The grade to be used shall be as required by the standard specifications or as modified in the special provisions or as shown on the plans.

COMMERCIAL GRADING RULES

7.1 Specifications for structural lumber shall have the following stipulated:

7.1.1 The size of each item required, as to thickness, width, and length, with the thickness and width expressed in terms of nominal dimensions.

7.1.2 The stress-grade of lumber required, including any special requirements, such as provisions for heartwood content, freedom from wane, etc.

7.1.3 Whether rough, dressed, or extent of dressing.

7.1.4 The species according to standard commercial name.

7.1.5 The grading rules paragraph number as a means of emphasizing the grade required.

7.1.6 The year of issue of the applicable grading rules.

7.1.7 The name of the regional agency that sponsors the grading rule for the particular species involved.

7.2 The material supplied according to the commercial grading rules shall be of equal or greater stress value than the stress-grade specified.

HEARTWOOD REQUIREMENTS

8.1 There shall be no heartwood requirement for timber that is to be pressure treated and the amount of sapwood shall not be limited.

8.2 It is advisable to specify a minimum heartwood requirement for untreated structural lumber and timber for use in exposed permanent structures. If it is necessary to specify a minimum heartwood requirement for untreated lumber requirements, or if it is necessary to specify side-cut material for stringers, floor beams, and caps, definite requirements shall be included in the grade specifications or on the plans.

TIMBER PILES

GENERAL

9.1 Unless otherwise required by the plans or by the special provisions, timber piles may be of any species of wood which will withstand driving and support the loads imposed. Sawn timbers used as piling shall conform to the requirements for the Grading of Solid Sawn Structural Timber, as set forth in Sections 5 to 8 inclusive.

QUALITY

10.1 *Soundness.*—Piles shall be of sound wood, free from decay, red heart, or insect attack. The butt end of cedar and cypress piles may have a pipe or stump rot hole not more than 1½ inches in diameter. Cypress piles may have peck aggregating not more than the hole limitation. Southern pine piles may have unsound knots not exceeding half the permitted size of a sound knot, provided that the unsoundness extends to not more than 1½-inch depth and that the adjacent areas of the trunk are not affected. Piles having sound turpentine scars undamaged by insects may be accepted.

10.2 *Knots.*—Sound knots in piles 50 feet or less in length, and in three quarters of the length from the butt of piles longer than 50 feet, shall be no longer than 4 inches, or one-third the diameter of the pile at the point where they occur, whichever is the smaller. Sound knots in the remaining one quarter of the length of piles longer than 50 feet shall be no larger than 5 inches, or one-half the diameter of the pile at the point where they occur, whichever is the smaller. The size of a knot shall be its diameter measured at right angles to the length of the pile. Unsound knots shall not be permitted except in Southern pine piles as specified above. The sum of sizes of all knots in any foot of length of the pile shall not exceed twice the size of the largest permitted single knot. Cluster knots are prohibited. A cluster knot is two or more knots grouped together, the fibers of the wood being deflected around the entire unit. A group of single knots with fibers deflected around each knot separately is not a cluster, even though the knots may be in close proximity.

10.3 *Holes.*—Holes less than one-half inch in average diameter may be permitted provided the sum of the average diameters of all holes in any square foot of pile surface does not exceed 1½ inches.

10.4 *Splits and Shakes.*—Splits shall not be longer than the butt diameter of the pile. The length of any shake or combination of shakes in the outer half of the radius of the butt of the pile, when measured along the curve of the annual ring, shall not exceed one-third the circumference of the butt of the pile.

10.5 *Treated Piles, Sapwood.*—Piles for preservative treatment shall have not less than one inch of sapwood at the butt end.

10.6 *Heartwood and Density.*—In untreated piling for use in exposed work, the diameter of the heartwood at the butt shall be not less than eight-tenths of the diameter of the pile at the butt. If high heartwood content is required for untreated foundation piles, the ratio of heartwood to total diameter shall be specified. If high structural strength is required, a limitation on the minimum number of annual rings per inch of radius shall be shown on the plans or in the special provisions.

10.7 *Peeling.*—Piles shall be peeled by removing all of the outer bark and at least 80 percent of the inner bark, well distributed over the surface of the pile. When piles are to receive preservative treatment, no strip of inner bark wider than one-half inch shall remain.

10.8 *Cutting and Trimming.*—Butts and tips shall be sawed square with the axis of the pile. All knots and limbs shall be trimmed or smoothly cut flush with the surface of the pile except that knots may be hand-trimmed flush with the surface of the swell surrounding the knot.

10.9 *Straightness.*—A straight line from the center of the butt to the tip shall lie entirely within the body of the pile. Long piles for driving to light bearing values may be accepted under the following alternate if so specified: A straight line from the center of the butt to the center of the tip may lie partly outside the body of the pile, but the maximum distance between the line and the pile shall not exceed one-half percent of the length of the pile or 3 inches, whichever is the smaller.

10.10 *Taper.*—Piles shall be cut above the butt swell and shall have a continuous taper from the point of butt measurement to the tip.

10.11 *Twist of Grain.*—Twist of grain in any 20 feet of length shall not exceed one-half of the circumference at the mid-point of length measured.

DIMENSIONS

11.1 *Circumferences and Diameters.*—The circumferences of piles measured under the bark shall have minimum and maximum values as given in Table 1, except that 10 percent of the piles in any lot may have circumferences 2 inches less than the tabulated minimum values. The ratio of the maximum to the minimum diameter at the butt of any pile shall not exceed 1.2.

11.2 *Order Lengths.*—Piles shall be furnished cut to any of the following lengths as specified: 16 to 40 feet in multiples of 2 feet; over 40 feet in multiples of 5 feet. Individual piles may vary from the length specified as much as one foot plus or minus in piles shorter than 40 feet and two feet plus or minus in piles 40 feet or longer. The average length of all piles of a specified length in each lot shall be not less than the length specified.

TABLE 1
Circumferences and Diameters of Timber Piles

Length	3 feet from butt				At tip, minimun	
	Minimum		Maximum			
	Circumference	Diameter (approximate)	Circumference	Diameter (approximate)	Circumference	Diameter (approximate)
Feet	Inches	Inches	Inches	Inches	Inches	Inches
Douglas Fir, Hemlock, Larch, Pine, Spruce or Tamarack						
Under 40	38	12	63	20	25	8
40 to 50 incl.	38	12	63	20	22	7
51 to 70 incl.	41	13	63	20	22	7
71 to 90 incl.	41	13	63	20	19	6
Over 90[1]						
Oak and Other Hardwoods, Cypress						
Under 30	38	12	57	18	25	8
30 to 40 incl.	41	13	63	20	22	7
Over 40	41	13	63	20	19	6
Cedar						
Under 30	38	12	69	22	25	8
30 to 40 incl.	41	13	69	22	25	8
Over 40	41	13	69	22	22	7

[1] Dimensions of piles over 90 feet in length shall be as given in the special provisions.

STRUCTURAL GLUED LAMINATED TIMBER

GENERAL

12.1 Structural glued laminated timber shall conform with "U.S. Commercial Standard CS 253-63 for Structural Glued Laminated Timber."

———— o ————

Standard Specification for

Cold-Finished Carbon Steel Bars and Shafting

AASHO DESIGNATION: M 169–70
(ASTM DESIGNATION: A 108–69)

SCOPE

1.1 This specification covers cold-finished carbon steel bars of grades, qualities and cross-sections regarded as generally suitable for heat treatment, for machining into components, or for use in the as-finished condition as shafting, or in constructional applications, or for other similar purposes. Grades of steel are identified by grade numbers and cover a selection of compositions, including the free-cutting steels, in common use. Other compositions may be furnished subject to agreement between the manufacturer and the purchaser.

1.2 The sections of bar steel covered are as follows:

Rounds, 9 in. and under in diameter

Squares, 4 in. and under between parallel surfaces

Hexagons, 3⅛ in. and under between parallel surfaces

Flats, ¼ in. and over in thickness and generally not over 12 in. in width.

1.3 Supplementary requirements (Sections S1 to S11) of an optional nature are provided. They shall apply only when specified by the purchaser. Details of these supplementary requirements shall be agreed upon by the manufacturer and the purchaser.

GENERAL REQUIREMENTS

2.1 Material furnished under this specification shall conform to the requirements of the current edition of ASTM Specification A 29[1], General Requirements for Hot-Rolled and Cold-Finished Carbon and Alloy Steel Bars, unless otherwise provided herein.

BASIS OF PURCHASE

3.1 Bars and shafting may be cold drawn, or in the case of round sections also turned and polished, turned, ground and polished, or ground and polished from cold-drawn steel rounds, as specified. In addition some flats may be cold rolled.

3.2 Orders under this specification shall include the following as required to adequately describe the material:

TABLE I
Grade Designations and Ladle Chemical Compositions of
Cold-Finished Carbon Steel Bars and Shafting

NOTE.—Grade designations and compositions correspond to the respective AISI "C" and "B" designations and compositions.

Grade Designation	Carbon, per cent	Manganese, per cent	Phosphorus, per cent	Sulfur, per cent
Open-Hearth, Basic-Oxygen, and Electric-Furnace Grades[b]				
1008	0.10 max	0.25 to 0.50	0.040 max	0.050 max
1010	0.08 to 0.13	0.30 to 0.60	0.040 max	0.050 max
1015	0.13 to 0.18	0.30 to 0.60	0.040 max	0.050 max
1016	0.13 to 0.18	0.60 to 0.90	0.040 max	0.050 max
1018	0.15 to 0.20	0.60 to 0.90	0.040 max	0.050 max
1020	0.18 to 0.23	0.30 to 0.60	0.040 max	0.050 max
1022	0.18 to 0.23	0.70 to 1.00	0.040 max	0.050 max
1025	0.22 to 0.28	0.30 to 0.60	0.040 max	0.050 max
1030	0.28 to 0.34	0.60 to 0.90	0.040 max	0.050 max
1035	0.32 to 0.38	0.60 to 0.90	0.040 max	0.050 max
1040	0.37 to 0.44	0.60 to 0.90	0.040 max	0.050 max
1045	0.43 to 0.50	0.60 to 0.90	0.040 max	0.050 max
1050	0.48 to 0.55	0.60 to 0.90	0.040 max	0.050 max
1095	0.90 to 1.03	0.30 to 0.50	0.040 max	0.050 max
Open Hearth, Basic-Oxygen, and Electric-Furnace Free-Cutting Grades[b]				
1115	0.13 to 0.18	0.60 to 0.90	0.040 max	0.08 to 0.13
1117	0.14 to 0.20	1.00 to 1.30	0.040 max	0.08 to 0.13
1118	0.14 to 0.20	1.30 to 1.60	0.040 max	0.08 to 0.13
1137	0.32 to 0.39	1.35 to 1.65	0.040 max	0.08 to 0.13
1141	0.37 to 0.45	1.35 to 1.65	0.040 max	0.08 to 0.13
1144	0.40 to 0.48	1.35 to [illegible]	[illegible] max	0.24 to 0.33
1151	0.48 to 0.55	0.70 to [illegible]	[illegible] max	0.08 to 0.13
1211	0.13 max	0.60 to [illegible]	[illegible]	0.08 to 0.15
1212	0.13 max	0.70 to 1.00	0.07 to 0.12	0.16 to 0.23
1213	0.13 max	0.70 to 1.00	0.07 to 0.12	0.24 to 0.33
12L14[c]	0.15 max	0.80 to 1.20	0.04 to 0.09	0.25 to 0.35
Bessemer Grades[d]				
B 1010	0.13 max	0.30 to 0.60	0.07 to 0.12	0.060 max
Bessemer Free Cutting Grades[d]				
B 1111	0.13 max	0.60 to 0.90	0.07 to 0.12	0.08 to 0.15
B 1112	0.13 max	0.7[illegible] to 1.[illegible]	0.07 to 0.12	0.16 to 0.23
B 1113	0.13 max	0.70 to 1.00	0.07 to 0.12	0.24 to 0.33

[a] Silicon ranges as noted below may be specified for open hearth, basic oxygen, or electric furnace grades

Low Sulfur	Free-Cutting	Silicon, per cent
Up to 1015, incl		0.10 max
1015 to 1025, incl	1115 to 1151, incl	0.10 max, 0.10 to 0.20, or 0.15 to 0.30
Over 1025		0.10 to 0.20, or 0.15 to 0.30

[b] When required, lead is specified as an added element to a standard steel. A range of 0.15 to 0.35 per cent, inclusive, is commonly specified. Ladle analysis for lead is not determinable since lead is added to the ladle stream while each ingot is poured.

[c] Lead content shall be 0.15 to 0.35 per cent.

[d] Bessemer compositions and grades 1211, 1212, and 1213 are not supplied with a specified silicon content.

[1] Book of ASTM Standards, Part 3.

3.2.1. Quantity (weight or number of pieces),
3.2.2 Name of material (carbon steel bars or shafting, cold-finished),
3.2.3 Method of finish,
3.2.4 Cross-sectional shape,
3.2.5 Size,
3.2.6 Length,
3.2.7 Grade designation or complete chemical composition (Section 5),
3.2.8 Report of ladle analysis, if desired,
3.2.9 AASHO designation (M 169),
3.2.10 End use, exceptions to specification, special or supplementary requirements (Section 1.3), and
3.2.11 Leaded steel, when required see footnote b to Table 1).

PROCESS

4.1 The steel shall be made by the open-hearth, basic-oxygen, electric-furnace, or acid-bessemer process.

LADLE ANALYSIS

5.1 The steel shall conform on ladle analysis to the limits prescribed in Table 1 for the respective grades, or for other grades furnished by agreement between the manufacturer and the purchaser.

THERMAL TREATMENTS

6.1 When the purchaser desires material characteristics in a grade not normally developed in its as-rolled cold-finished condition he may specify that the material be annealed, normalized or stress relief annealed. The method of treatment and basis of testing shall be subject to agreement between the manufacturer and the purchaser. All steels wherein the maximum of the carbon range is over 0.55 per cent will require annealing for cold finishing.

SUPPLEMENTARY REQUIREMENTS

One or more of the following supplementary requirements shall apply when specified by the purchaser, details of these requirements being subject to agreement between the manufacturer and the purchaser.

SPECIAL COLD HEADING

S1. When cold-upsetting applications are involved, the purchaser may specify special cold-heading bars which in their production are given special surface control, special discard, special surface preparation, inspection and selection for the application.

SPECIAL SURFACE

S2. When inspection standards more restrictive than visual inspection are required, special surface may be specified.

SPECIAL CARBURIZING

S3. For case-hardening applications the purchaser may specify special carburizing bars, produced to a controlled austenitic grain structure and tested and selected for uniform carburizing.

SPECIAL DISCARD

S4. When required, the purchaser may specify a definite amount of discard, this being subject to agreement between the manufacturer and the purchaser.

RESTRICTED LADLE ANALYSIS

S5. When required, the purchaser may specify restrictive ladle analysis limits on one or more elements. The degree of restriction and the number of elements so restricted are both subject to negotiation between the manufacturer and the purchaser.

RESTRICTED DECARBURIZATION

S6. The purchaser may specify a maximum affected depth of decarburization when required for special applications, subject to agreement between the manufacturer and the purchaser.

HOMOGENEITY REQUIREMENTS (MACROSCOPIC)

S7. The purchaser may specify a macroetch test or fracture test. The etch test consists of deep etching a representative section in hot acid. The fracture test may be performed by any recognized method. The location, number and interpretation of tests shall be agreed upon between the manufacturer and the purchaser before the steel is produced.

NONMETALLIC INCLUSION REQUIREMENTS (MICROSCOPIC)

S8. When nonmetallic inclusion requirements are specified, the samples for testing shall be taken on a longitudinal plane midway betwen the center and the surface of the material. The area of the sample to be examined should be agreed upon between the purchaser and the manufacturer, and the test specimen should be heated and quenched before being polished to avoid pits. The rating of the inclusion count should also be agreed upon and be based upon examination at a magnification of 100 diameters. Resulfurized steels are not subject to inclusion ratings.

GRAIN SIZE

S9. When required, austenitic grain size may be specified in killed steels as either coarse (grain size 1 to 5, inclusive) or fine (grain size 5 to 8, inclusive); to be determined in accordance with Section 6, Comparison Method of Methods for Estimating the Average Grain Size of Metals (ASTM Designation: E 112).[2] The grain structure shall be considered satisfactory if 70 per cent is within the specified limits.

SPECIAL HEAT-TREATING Requirements

S10. When special heat-treating requirements are specified, all phases of the heat-treating procedure and mechanical requirements are subject to agreement between the purchaser and the manufacturer. The mechanical properties after heat treatment shall be obtainable for the full range of specified chemical limits.

RESTRICTED INCIDENTAL ELEMENTS

S11. The purchaser may specify limiting maximum requirements for copper, nickel, chromium or molybdenum subject to agreement between the manufacturer and the purchaser.

———— o ————

[2] Book of ASTM Standards, Part 31.

Standard Specification for

Reinforced Concrete Culvert, Storm Drain, and Sewer Pipe

AASHO DESIGNATION: M 170–70
(ASTM DESIGNATION: C 76–69)

SCOPE

1.1 This specification covers reinforced concrete pipe intended to be used for the conveyance of sewage, industrial wastes, and storm water, and for the construction of culverts.

NOTE 1—The values stated in U S customary units are to be regarded as the standard. The metric equivalents of U S customary units given in the body of the standard may be approximate

NOTE 2—This specification is a manufacturing and purchase specification only, and does not include requirements for bedding, backfill, or the relationship between earth cover load and the strength classification of pipe. However, experience has shown that the successful performance of this product depends in equal amounts upon the proper selection of the class of pipe, type of bedding and backfill, controlled manufacture in the plant, and care in the field construction work The purchaser of the reinforced concrete pipe specified herein is cautioned that he must properly correlate the field requirements with the class of pipe specified and provide adequate inspection in the manufacturing plant and at the construction site

CLASSES

2.1 Pipe manufactured according to this specification shall be of five classes identified as class I, class II, class III, class IV, and class V. The corresponding strength requirements are prescribed in Tables 1 to 5.

BASIS OF ACCEPTANCE

3.1 Unless otherwise designated by the purchaser at the time of, or before placing an order, two separate and alternate bases of acceptance are permitted as follows:

3.1.1 *Acceptance on Basis of Plant Load Bearing Tests, Material Tests and Inspection of Manufactured Pipe for Visual Defects and Imperfections*—Acceptability of the pipe in all diameters and classes produced in accordance with Sections 9 or 10 shall be determined by the results of the three-edge bearing tests for either the load to produce a 0.01-in. (0.25 mm) crack, or at the option of the purchaser, the load to produce a 0.01-in. (0.25 mm) crack and the ultimate strength of the pipe; by such material tests as are required in Sections 5, 6 and 7, by absorption tests on selected samples of concrete from the wall of the pipe; and by visual inspection of the finished pipe to determine its conformance with the accepted design and its freedom from defects

3.1.2 *Acceptance on the Basis of Material Tests and Inspection of Manufactured Pipe for Defects and Imperfections.*—Acceptability of the pipe in all diameters and classes produced in accordance with Sections 9 or 10 shall be determined by the results of such material tests as are required in Sections 5, 6 and 7, by crushing tests on concrete cores or cured concrete cylinders; by absorption tests on selected samples from the wall of the pipe; and by inspection of the finished pipe including amount and placement of reinforcement to determine its conformance with the accepted design and its freedom from defects.

3.1.3 The purchaser may select and have applied the basis of acceptance in either Paragraph (*1*)or(*2*).

3.2 *Age for Acceptance.*—Pipe shall be considered ready for acceptance when it conforms to the requirements, as indicated by the specified tests.

MATERIALS

REINFORCED CONCRETE

4.1 The reinforced concrete shall consist of portland cement, mineral aggregates, and water, in which steel has been embedded in such a manner that the steel and the concrete act together.

CEMENT

5.1 Portland cement shall conform to the requirements of the Specifications for Portland Cement (AASHO Designation: M 85), or shall be air-entraining portland cement conforming to the requirements of the Specifications for Air-Entraining Portland Cement (AASHO Designation: M 134), or shall be portland blast-furnace slag cement or portland-pozzolan cement conforming to the requirements of the Specifications for Blended Hydraulic Cements (ASTM Designation: C 595).

STEEL REINFORCEMENT

6.1 Reinforcement shall consist of wire conforming to the Specifications for Cold-Drawn Steel Wire for Concrete Reinforcement (AASHO Designation: M 32), or the Specification for Deformed Steel Wire for Concrete Reinforcement (AASHO Designation: M 225), or of wire fabric conforming to the Specifications for Welded Steel Wire Fabric for Concrete Reinforcement (AASHO Designation: M 55), or the Specification for Welded Deformed Steel Wire Fabric for Concrete Reinforcement (AASHO Designation: M 221), or of bars of Grade 40 steel conforming to the Specifications for Deformed Billet Steel Bars for Concrete Reinforcement (AASHO Designation: M 31), or of bars of Grade 80 steel conforming to the Specifications for Carbon Steel Bars Subject to Mechanical Property Requirements (AASHO Designation: M 227).

AGGREGATES

7.1 Aggregates shall conform to the Specification for Concrete Aggregates (AASHO Designation: M 6 and M 80), except that the requirement for gradation shall not apply and a loss of 50 per cent in the Los Angeles test shall be permitted.

MIXTURE

8.1 The aggregates shall be so sized and so graded and proportioned and thoroughly mixed in a batch mixer with such proportions of cement and water as will produce a homogeneous concrete mixture of such quality that the pipe will conform to the test and design requirements of these specifications. Admixtures or blends may be used with the approval of the consumer. In no case, however, shall the proportion of portland cement in the mixture be less than six U. S. standard bags (94 lb) per cubic yard (56 kg per cubic meter) of concrete.

DESIGN

DESIGN TABLES

9.1 The diameter, wall thickness, compressive strength of the concrete, and the amount of the circumferential reinforcement shall be as prescribed for Classes I to V in Tables 1 to 5 subject to the provisions of Sections 10, 11, 21, and 23.

MODIFIED OR SPECIAL DESIGNS

10.1 If permitted by the purchaser the manufacturer may request approval by the purchaser of modified designs which differ from the designs in Section 9; or special designs for sizes and loads beyond those shown in Tables 1 to 5, Section 9, or special designs for pipe sizes that do not have steel reinforcement areas shown in Tables 2 to 5 of Section 9.

10.2 Such modified or special designs shall be based on rational or empirical evaluations of the ultimate strength and cracking behavior of pipe and shall fully describe to the purchaser any deviations from the requirements of Section 9. The descriptions of modified or special designs shall include the wall thickness, the concrete strength, and the area, type, placement, number of layers, and strength of the steel reinforcement.

10.3 The manufacturer shall submit to the purchaser proof of the adequacy of the proposed modified or special design. Such proof may comprise the submission of properly

TABLE 1
Design Requirements for Class I Reinforced Concrete Pipe[a]

NOTE: See Section 3 for basis of acceptance specified by the purchaser.

The strength test requirements in pounds per linear foot of pipe under the three-edge bearing method shall be either the D-load (test load expressed in pounds per linear foot per foot of diameter) to produce a 0.01 in. crack, or the D-loads to produce the 0.01-in. crack and the ultimate load as specified below, multiplied by the internal diameter of the pipe in feet.

D load to produce a 0.01-in. crack	800
D-load to produce the ultimate load	1200

Internal Diameter of Pipe, in.	Reinforcement, sq in. per linear foot of pipe wall							
	Wall A				Wall B			
	Concrete Strength, 4000 psi				Concrete Strength, 4000 psi			
	Wall Thickness, in.	Circular Reinforcement		Elliptical Reinforcement[b]	Wall Thickness, in.	Circular Reinforcement		Elliptical Reinforcement[b]
		Inner Cage	Outer Cage			Inner Cage	Outer Cage	
60	5	0.25	0.19	0.28	6	0.21	0.16	0.23
66	5½	0.30	0.22	0.33	6½	0.25	0.19	0.28
72	6	0.35	0.26	0.39	7	0.29	0.22	0.32
78	6½	0.40	0.30	0.44	7½	0.32	0.24	0.36
84	7	0.45	0.34	0.50	8	0.37	0.28	0.41
90	7½	0.49	0.36	0.54	8½	0.41	0.31	0.46
96	8	0.54	0.40	0.60	9	0.46	0.35	0.51
	Concrete Strength, 5000 psi							
102	8½	0.63	0.48	Inner Circular 0.22 Plus Elliptical 0.48	9½	0.54	0.41	Inner Circular 0.20 Plus Elliptical 0.41
108	9	0.68	0.51	Inner Circular 0.25 Plus Elliptical 0.51	10	0.61	0.46	Inner Circular 0.22 Plus Elliptical 0.46

[a] For modified or special designs see Section 10.

Steel areas may be interpolated between those shown for variations in diameter, loading or wall thickness. Pipe over 96 in. in diameter shall have two circular cages or an inner circular plus one elliptical cage of the steel areas shown.

[b] The elliptical steel must be held in place by means of holding rods or chairs or other positive means throughout the entire length of the pipe and throughout the entire casting operation and remain in place until the concrete has taken its initial set.

certified three-edge bearing tests already made, which are found by the purchaser to be adequate or, if such three-edge bearing tests are not available or acceptable, the manufacturer may be required to perform proof tests in sizes and classes selected by the purchaser to demonstrate to the correctness and adequacy of the proposed design.

10.4 Such pipe must meet all of the test and performance requirements specified by the purchaser in accordance with Section 3.

PLACING REINFORCEMENTS

11.1 Where one line of circular reinforcement is used, it shall be placed from 35 to 50 per cent of the shell thickness from the inner surface of the pipe except that for wall thickness less than 2½ in. (63 mm), the nominal protective cover of the concrete over the circumferential reinforcement in the barrel of the pipe shall be ¾ in. (19 mm). In circular pipe having two lines of circular reinforcement, each line shall be so placed that the nominal protective covering of concrete over the circumferential reinforcement in the barrel of the pipe shall be 1 in. (25.4 mm). In circular pipe having elliptical reinforcement with wall thickness 2½ in. (63 mm) or over, the reinforcement in the barrel of the pipe shall be so placed that the nominal covering of concrete over the circumferential reinforcement along the vertical diameter of the pipe shall be 1 in. (25.4 mm) from the inside surface of the pipe, and the nominal protective covering of concrete over the circumferential reinforcement along the horizontal diameter of the pipe shall be 1 in. (25.4 mm) from the outside surface of the pipe. In all pipe 36 in. or more in diameter, the bell or the spigot of the joint shall contain circumferential reinforcement equal in area to that of a single line within the barrel of the pipe. The nominal location of the reinforcement shall be subject, however, to the permissible variations in dimensions given in Section 23.

TABLE 1A
Design Requirements for Class I Reinforced Concrete Pipe[a]

NOTE: See Section 3 for basis of acceptance specified by purchaser.

The strength test requirements in kilograms per linear centimeter of pipe under the three-edge-bearing method shall be either the D-load (test load expressed in kilograms per linear centimeter per centimeter of diameter) to produce the 0.25 mm crack, or the D loads to produce the 0.25-mm crack and the ultimate load as specified below, multiplied by the internal diameter of the pipe in centimeters

D-load to produce a 0.25-mm crack	0.391
D-load to produce the ultimate load	0.586

Internal Diameter of Pipe, cm (in.)	Reinforcement, sq cm per linear m of pipe wall							
	Wall A				Wall B			
	Concrete Strength, 281 kgf/sq cm				Concrete Strength, 281 kgf/sq cm			
	Wall Thickness, cm	Circular Reinforcement: Inner Cage	Circular Reinforcement: Outer Cage	Elliptical Reinforcement[b]	Wall Thickness, cm	Circular Reinforcement: Inner Cage	Circular Reinforcement: Outer Cage	Elliptical Reinforcement[b]
152 (60)	12.7	5.3	4.0	5.9	15.2	4.4	3.4	4.9
168 (66)	14.0	6.4	4.7	7.0	16.5	5.3	4.0	5.9
183 (72)	15.2	7.4	5.5	8.3	17.8	6.1	4.7	6.8
198 (78)	16.5	8.5	6.4	9.3	19.1	6.8	5.1	7.6
213 (84)	17.8	9.5	7.2	10.6	20.3	7.8	5.9	8.7
229 (90)	19.1	10.4	7.6	11.4	21.6	8.7	6.6	9.7
244 (96)	20.3	11.4	8.5	12.7	22.9	9.7	7.4	10.8
	Concrete Strength, 352 kgf/sq cm							
259 (102)	21.6	13.3	10.2	Inner Circular 4.7; Plus Elliptical 10.2	24.1	11.4	8.7	Inner Circular 4.2; Plus Elliptical 8.7
274 (108)	22.9	14.4	10.8	Inner Circular 5.3; Plus Elliptical 10.8	25.4	12.9	9.7	Inner Circular 4.7; Plus Elliptical 9.7

[a] For sizes and loads beyond those shown in this table, pipe may be supplied using special designs involving one or more of the following: wall thickness, high strength concrete, shear reinforcement, in accordance with the provisions of Section 10.

Steel areas may be interpolated between those shown for variations in diameter, loading, or wall thickness. Pipe over 96 in. (244 cm) in diameter shall have two circular cages or an inner circular plus one elliptical cage of the steel areas shown.

[b] The elliptical steel must be held in place by means of holding rods or chairs or other positive means throughout the entire length of the pipe and throughout the entire casting operation and remain in place until the concrete has taken its initial set.

See Section 10 for provisions for alternate designs.

11.2 A line of circumferential reinforcement of any given total area may be composed of two layers if the layers are not separated by more than the thickness of one longitudinal layer plus ¼ in. (6.4 mm). The two layers shall be tied together to form a single rigid cage. All other specification requirements such as laps, welds, and tolerances of placement in the wall of the pipe, etc., shall apply to this method of fabricating a line of reinforcement.

LONGITUDINALS

12.1 Each line of circumferential reinforcement shall be assembled into a cage which shall contain sufficient longitudinal bars or members, extending through the wall of the pipe, to maintain the reinforcement rigidly in shape and correct position within the form. The exposure of the ends of longitudinals, stirrups, or spacers that have been used to position the cages during the placement of the concrete shall not be a cause for rejection.

LAPS, WELDS, AND SPACING

13.1 If the splices are not welded, the reinforcement shall be lapped not less than 20 diameters for deformed bars and deformed cold worked wire, and 40 diameters for plain bars and cold-drawn wire. In addition, where lapped cages of welded wire fabric are used without welding, the lap shall contain a longitudinal wire. When splices are welded and are not lapped to the minimum requirements above, pull tests of representative specimens shall develop at least 50 per cent of the minimum specified strength of the steel, and there shall be a minimum lap of 2 in. (50.8 mm). For butt-welded splices in bars or wire,

TABLE 2
Design Requirements for Class II Reinforced Concrete Pipe[a]

NOTE: See Section 3 for basis of acceptance specified by the purchaser.

The strength test requirements in pounds per linear foot of pipe under the three-edge-bearing method shall be either the D-load (test load expressed in pounds per linear foot per foot of diameter) to produce a 0.01-in. crack, or the D-loads to produce the 0.01-in. crack and the ultimate load as specified below, multiplied by the internal diameter of the pipe in feet.

D-load to produce a 0.01-in. crack ... 1000
D-load to produce the ultimate load ... 1500

Internal Diameter of Pipe, in.	Reinforcement, sq in. per linear foot of pipe wall											
	Wall A				Wall B				Wall C			
	Concrete Strength, 4000 psi				Concrete Strength, 4000 psi				Concrete Strength, 4000 psi			
	Wall Thickness, in.	Circular Reinforcement		Elliptical Reinforcement[b]	Wall Thickness, in.	Circular Reinforcement		Elliptical Reinforcement[b]	Wall Thickness, in.	Circular Reinforcement		Elliptical Reinforcement[b]
		Inner Cage	Outer Cage			Inner Cage	Outer Cage			Inner Cage	Outer Cage	
12	1 3/4	0.07[c]			2	0.07[c]						
15	1 5/8	0.07[c]			2 1/4	0.07[c]						
18	2	0.07[c]		0.07[c]	2 1/2	0.07[c]		0.07[c]				
21	2 1/4	0.12		0.10	2 3/4	0.07[c]		0.07[c]				
24	2 1/2	0.13		0.11	3	0.07[c]		0.07[c]				
27	2 5/8	0.15		0.13	3 1/4	0.13		0.11				
30	2 3/4	0.15		0.14	3 1/2	0.14		0.12				
33	2 7/8	0.16		0.15	3 3/4	0.15		0.13				
36	3	0.14	0.10	0.15	4	0.12	0.09	0.13	4 3/4	0.07	0.07	0.08
42	3 1/2	0.16	0.12	0.18	4 1/2	0.15	0.12	0.17	5 1/4	0.10	0.08	0.11
48	4	0.21	0.16	0.23	5	0.18	0.14	0.20	5 3/4	0.14	0.11	0.15
54	4 1/2	0.25	0.19	0.28	5 1/2	0.22	0.16	0.24	6 1/4	0.17	0.13	0.19
60	5	0.30	0.22	0.33	6	0.25	0.19	0.28	6 3/4	0.22	0.17	0.24
66	5 1/2	0.35	0.26	0.39	6 1/2	0.31	0.23	0.34	7 1/4	0.25	0.19	0.28
72	6	0.41	0.30	0.45	7	0.35	0.26	0.39	7 3/4	0.30	0.23	0.33
78	6 1/2	0.46	0.35	0.51	7 1/2	0.40	0.30	0.44	8 1/4	0.35	0.26	0.39
84	7	0.51	0.39	0.57	8	0.46	0.34	0.51	8 3/4	0.41	0.31	0.46
90	7 1/2	0.57	0.43	0.63	8 1/2	0.51	0.38	0.57	9 1/4	0.48	0.36	0.53
96	8	0.62	0.47	0.69	9	0.57	0.43	0.63	9 3/4	0.55	0.41	0.61
	Concrete Strength, 5000 psi											
102	8 1/2	0.76	0.57	Inner Circular 0.28 Plus Elliptical 0.57	9 1/2	0.68	0.51	Inner Circular 0.24 Plus Elliptical 0.51	10 1/4	0.62	0.47	Inner Circular 0.22 Plus Elliptical. 0.47
108	9	0.85	0.64	Inner Circular 0.31 Plus Elliptical 0.64	10	0.76	0.57	Inner Circular 0.27 Plus Elliptical. 0.57	10 3/4	0.70	0.53	Inner Circular 0.25 Plus Elliptical. 0.53

[a] For modified or special designs see Section 10

Steel areas may be interpolated between those shown for variations in diameter, loading, or wall thickness. Pipe over 96 in. in diameter shall have two circular cages or an inner circular plus one elliptical cage of the steel areas shown.

[b] The elliptical steel must be held in place by means of holding rods or chairs or other positive means throughout the entire length of the pipe and throughout the entire casting operation and remain in place until the concrete has taken its initial set.

[c] For these classes and sizes, the minimum practical steel reinforcement is specified. The actual ultimate strength is greater than the minimum strength specified for nonreinforced pipe of equivalent diameters in the Specification for Concrete Sewer, Storm Drain, and Culvert Pipe (AASHO Designation. M 86).

permitted only with helically wound cages, pull tests of representative specimens shall develop at least 75 per cent of the minimum specified strength of the steel. The spacing center to center of adjacent rings of circumferential reinforcement in a cage shall not exceed 4 in. (10 cm) for pipe up to and including pipe having a 4-in. (10 cm) wall thickness nor exceed the wall thickness for larger pipe, and shall in no case exceed 6 in. (15 cm). The continuity of the circumferential reinforcing steel shall not be destroyed during the manufacture of the pipe.

JOINTS

14.1 The ends of reinforced concrete pipe sections shall be so formed that when the pipe are laid together they will make a continuous and uniform line of pipe, compatible with the tolerances given in 23.1. The joints shall be of such design as will permit effective

TABLE 2A

Design Requirements for Class II Reinforced Concrete Pipe[a]

NOTE See Section 3 for basis of acceptance specified by purchaser.

The strength test requirements in kilograms per linear centimeter of pipe under the three-edge-bearing method shall be either the D-load (test load expressed in kilograms per linear centimeter per centimeter of diameter) to produce the 0.25 mm crack, or the D-loads to produce the 0.25 mm crack and the ultimate load as specified below, multiplied by the internal diameter of the pipe in centimeters

D load to produce a 0.25 mm crack 0.488

D load to produce the ultimate load 0.732

Internal Diameter of Pipe, cm (in.)	Reinforcement, sq cm per linear m of pipe wall											
	Wall A				Wall B				Wall C			
	Concrete Strength, 281 kgf/sq cm				Concrete Strength, 281 kgf/sq cm				Concrete Strength, 281 kgf/sq cm			
	Wall Thickness, cm	Circular Reinforcement: Inner Cage	Circular Reinforcement: Outer Cage	Elliptical Reinforcement[b]	Wall Thickness, cm	Circular Reinforcement: Inner Cage	Circular Reinforcement: Outer Cage	Elliptical Reinforcement[b]	Wall Thickness, cm	Circular Reinforcement: Inner Cage	Circular Reinforcement: Outer Cage	Elliptical Reinforcement[b]
31 (12)	4.4	1.5			5.1	1.5[c]			.	.	. . . .	. . .
38 (15)	4.7	1.5[c]			5.7	1.5[c]						
46 (18)	5.1	1.5[c]		1.5[c]	6.3	1.5[c]		1.5[c]	.		.	.
53 (21)	5.7	2.5		2.1	7.0	1.5[c]		1.5[c]	.		.	. . .
61 (24)	6.3	2.8		2.3	7.6	1.5		1.5				. .
69 (27)	6.6	3.2		2.6	8.3	2.8		2.3			.	. .
76 (30)	7.0	3.2		3.0	8.9	3.0		2.6	.	.	. . .	. .
84 (33)	7.3	3.4		3.2	9.5	3.2		2.8				
91 (36)	7.6	3.0	2.1	3.2	10.1	2.5	1.9	2.8	12.0	1.5	1.5	1.7
107 (42)	8.9	3.4	2.5	3.8	11.4	3.2	2.5	3.6	13.3	2.1	1.7	2.3
122 (48)	10.1	4.5	3.4	4.9	12.7	3.8	3.0	4.2	14.6	3.0	2.3	3.2
137 (54)	11.4	5.3	4.0	6.0	14.0	4.7	3.4	5.1	15.9	3.6	2.8	4.0
152 (60)	12.7	6.4	4.7	7.0	15.2	5.3	4.0	5.9	17.1	4.7	3.6	5.1
168 (66)	14.0	7.4	5.5	8.3	16.5	6.6	4.9	7.2	18.4	5.3	4.0	5.9
183 (72)	15.2	8.7	6.4	9.5	17.8	7.4	5.5	8.3	19.7	6.4	4.9	7.0
198 (78)	16.5	9.7	7.4	10.8	19.0	8.5	6.4	9.3	20.9	7.4	5.5	8.3
213 (84)	17.8	10.8	8.3	12.1	20.3	9.7	7.2	10.8	22.2	8.7	6.6	9.7
229 (90)	19.0	12.1	9.1	13.3	21.6	10.8	8.0	12.1	23.5	10.2	7.6	11.2
244 (96)	20.3	13.1	10.0	14.6	22.9	12.1	9.1	13.3	24.8	11.6	8.7	12.9
	Concrete Strength, 352 kgf/sq cm											
259 (102)	21.6	16.1	12.1	Inner Circular 5.9 Plus Elliptical 12.1	24.1	14.4	10.8	Inner Circular 5.1 Plus Elliptical 10.8	26.0	13.1	10.0	Inner Circular 4.7 Plus Elliptical 10.0
274 (108)	22.9	18.0	13.6	Inner Circular 4.9 Plus Elliptical 13.6	25.4	16.1	12.1	Inner Circular 5.7 Plus Elliptical 12.1	27.3	14.8	11.2	Inner Circular 5.3 Plus Elliptical 11.2

[a] For sizes and loads beyond those shown in this table, pipe may be supplied using special designs involving one or more of the following: wall thickness, high strength concrete, shear reinforcement, in accordance with the provisions of Section 10.

Steel areas may be interpolated between those shown for variations in diameter, loading, or wall thickness. Pipe over 96 in. (244 cm) in diameter shall have two circular cages or an inner circular plus one elliptical cage of the steel areas shown.

[b] The elliptical steel must be held in place by means of holding rods or chairs or other positive means throughout the entire length of the pipe and throughout the entire casting operation and remain in place until the concrete has taken its initial set.

See Section 10 for provisions for alternate designs.

[c] For these classes and sizes the minimum practical steel reinforcement is specified. The actual ultimate strength is greater than the minimum strength specified for nonreinforced pipe of equivalent diameters in the Specification for Concrete Sewer, Storm Drain, and Culvert Pipe (AASHO Designation: M 86).

jointing to reduce leakage and infiltration to a satisfactory minimum and to permit placement without appreciable irregularities in the flow line.

MANUFACTURE

PLACEMENT OF CONCRETE

15.1 The transporting and placement of concrete shall be by methods that will prevent the segregation of the concrete materials and the displacement of the reinforcement steel from its proper position in the form.

TABLE 3
Design Requirements for Class III Reinforced Concrete Pipe[a]

NOTE: See Section 3 for the basis of acceptance specified by the purchaser.

The strength test requirements in pounds per linear foot of pipe under the three-edge-bearing method shall be either the D-load (test load expressed in pounds per linear foot per foot of diameter) to produce a 0.01-in. crack, or the D-loads to produce the 0.01-in. crack and the ultimate load as specified below, multiplied by the internal diameter of the pipe in feet.

D-load to produce a 0.01-in. crack 1350
D-load to produce the ultimate load 2000

Internal Diameter of Pipe, in.	Reinforcement, sq in. per linear foot of pipe wall											
	Wall A				Wall B				Wall C			
	Concrete Strength, 4000 psi				Concrete Strength, 4000 psi				Concrete Strength, 4000 psi			
	Wall Thickness, in.	Circular Reinforcement		Elliptical Reinforcement[b]	Wall Thickness, in.	Circular Reinforcement		Elliptical Reinforcement[b]	Wall Thickness, in.	Circular Reinforcement		Elliptical Reinforcement[b]
		Inner Cage	Outer Cage			Inner Cage	Outer Cage			Inner Cage	Outer Cage	
12	1¾	0.07[c]	...	..	2	0.07[c]	...	.	..	.	..	..
15	1⅞	0.07[c]	...	.	2¼	0.07[c]	..		..			...
18	2	0.07[c]	...	0.07[c]	2½	0.07[c]	..	0.07[c]	...		..	...
21	2¼	0.14	...	0.11	2¾	0.07[c]		0.07[c]	...	..	..	...
24	2½	0.17	...	0.14	3	0.07[c]	...	0.07[c]	..	..	...	...
27	2⅝	0.18	..	0.16	3¼	0.16	.	0.14	...	...	.	...
30	2¾	0.19	...	0.18	3½	0.18		0.15	.	.	...	...
33	2⅞	0.21		0.20	3¾	0.15	0.11	0.17				
36	3	0.21	0.16	0.23	4	0.17	0.13	0.19	4¾	0.08	0.07	0.09
42	3½	0.25	0.19	0.28	4½	0.21	0.16	0.23	5¼	0.12	0.09	0.13
48	4	0.32	0.24	0.35	5	0.24	0.18	0.27	5¾	0.16	0.12	0.18
54	4½	0.38	0.28	0.42	5½	0.29	0.22	0.32	6¼	0.21	0.16	0.23
60	5	0.44	0.33	0.49	6	0.34	0.26	0.38	6¾	0.25	0.19	0.28
66	5½	0.50	0.37	0.55	6½	0.41	0.31	0.46	7¼	0.31	0.23	0.34
72	6	0.57	0.43	0.63	7	0.49	0.37	0.54	7¾	0.36	0.27	0.40
	Concrete Strength, 5000 psi											
78	6½	0.64	0.48	0.71	7½	0.57	0.43	0.63	8¼	0.42	0.32	0.47
84	7	0.72	0.54	0.80	8	0.64	0.48	0.71	8¾	0.50	0.38	0.56
					Concrete Strength, 5000 psi				Concrete Strength, 5000 psi			
90	7½	0.81	0.61	0.90	8½	0.69	0.52	0.77	9¼	0.59	0.45	0.66
96	8	0.93	0.70	1.03	9	0.76	0.57	0.84	9¾	0.70	0.53	Inner Circular 0.25 Plus Elliptical. 0.53
102	8½	1.03	0.77	Inner Circular 0.37 Plus Elliptical. 0.77	9½	0.90	0.68	Inner Circular 0.32 Plus Elliptical. 0.68	10¼	0.83	0.62	Inner Circular 0.30 Plus Elliptical 0.62
108	9	1.22	0.91	Inner Circular 0.45 Plus Elliptical. 0.91	10	1.08	0.81	Inner Circular 0.39 Plus Elliptical. 0.81	10¾	0.99	0.74	Inner Circular 0.36 Plus Elliptical. 0.74

[a] For modified or special designs see Section 10.

[b] The elliptical steel must be held in place by means of holding rods or chairs or other positive means throughout the entire length of the pipe and throughout the entire casting operation and remain in place until the concrete has taken its initial set.

[c] For these classes and sizes, the minimum practical steel reinforcement is specified. The actual ultimate strength is greater than the minimum strength specified for nonreinforced pipe of equivalent diameters in the Specification for Concrete Sewer, Storm Drain, and Culvert Pipe (AASHO Designation: M 86).

CURING

16.1 Pipe shall be subjected to any one of the methods of curing described in 16.2 to 16.5, or to any other method or combination of methods approved by the purchaser, that will give satisfactory results. The pipe shall be cured for a sufficient length of time so that the concrete will develop the specified compressive strength at 28 days or less.

16.2 *Steam Curing.*—Pipe may be placed in a curing chamber, free from outside drafts, and cured in a moist atmosphere maintained by the injection of steam for such time

TABLE 3A

Design Requirements for Class III Reinforced Concrete Pipe[a]

NOTE: See Section 3 for basis of acceptance specified by purchaser.

The strength test requirements in kilograms per linear centimeter of pipe under the three-edge-bearing method shall be either the D-load (test load expressed in kilograms per linear centimeter per centimeter of diameter) to produce the 0.25-mm crack, or the D loads to produce the 0.25 mm crack and the ultimate load as specified below, multiplied by the internal diameter of the pipe in centimeters

D load to produce a 0.25 mm crack	0.659
D-load to produce the ultimate load	0.976

Internal Diameter of Pipe, cm (in.)	Reinforcement, sq cm per linear m of pipe wall											
	Wall A				Wall B				Wall C			
	Concrete Strength, 281 kgf/sq cm				Concrete Strength, 281 kgf/sq cm				Concrete Strength, 281 kgf/sq cm			
	Wall Thickness, cm	Circular Reinforcement		Elliptical Reinforcement[b]	Wall Thickness, cm	Circular Reinforcement		Elliptical Reinforcement[b]	Wall Thickness, cm	Circular Reinforcement		Elliptical Reinforcement[b]
		Inner Cage	Outer Cage			Inner Cage	Outer Cage			Inner Cage	Outer Cage	
31(12)	4.4	1.5[c]			5.1	1.5[c]						
38(15)	4.7	1.5[c]			5.7	1.5[c]						
46(18)	5.1	1.5[c]		1.5[c]	6.3	1.5[c]		1.5[c]				
53(24)	5.7	3.0		2.3	7.0	1.5[c]		1.5[c]				
61(24)	6.3	3.6		3.0	7.6	1.5[c]		1.5[c]				
69(27)	6.6	3.8		3.4	8.3	3.4		3.0				
76(30)	7.0	4.0		3.8	8.9	3.8		3.2				
84(33)	7.3	4.4		4.2	9.5	3.2	2.3	3.6				
91(36)	7.6	5.3	3.4	4.7	10.1	3.6	2.8	4.0	12.0	1.7	1.5	1.9
107(42)	8.9	5.3	4.0	5.9	11.4	4.4	3.4	4.9	13.3	2.5	1.9	2.8
122(48)	10.1	6.8	5.1	7.4	12.7	5.1	3.8	5.7	14.6	3.4	2.5	3.8
137(54)	11.4	8.0	6.9	8.9	14.0	6.1	4.7	6.8	15.9	4.4	3.4	4.9
152(60)	12.7	9.3	7.0	10.4	15.2	7.2	5.5	8.0	17.1	5.3	4.0	5.9
168(66)	14.0	10.6	7.8	11.6	16.5	9.1	6.6	9.7	18.4	6.6	4.9	7.2
183(72)	15.2	12.1	9.1	13.3	17.8	10.4	7.8	11.4	19.7	7.6	5.7	8.4
	Concrete Strength, 352 kgf/sq cm											
198(78)	16.5	13.5	9.2	15.0	19.0	12.1	9.1	13.3	20.9	8.9	6.8	9.9
213(84)	17.8	15.2	11.4	16.9	20.3	13.5	10.2	15.0	22.2	10.6	8.0	11.9
					Concrete Strength, 352 kgf/sq cm				Concrete Strength, 352 kgf/sq cm			
229(90)	19.0	17.1	12.9	19.1	21.6	14.6	11.0	17.3	23.5	12.5	9.5	14.0
224(96)	20.3	19.7	14.8	21.8	22.9	16.1	12.1	17.8	24.8	14.8	11.2	Inner Circular 5.3 Plus Elliptical 11.2
259(102)	21.6	21.8	16.3	Inner Circular 7.8 Plus Elliptical 16.3	24.1	19.1	14.4	Inner Circular 6.8 Plus Elliptical 14.4	26.0	17.6	13.1	Inner Circular 6.4 Plus Elliptical. 13.1
274(108)	22.9	25.4	19.3	Inner Circular 9.5 Plus Elliptical 19.3	25.4	22.9	17.1	Inner Circular 8.3 Plus Elliptical 17.1	27.3	21.0	15.7	Inner Circular 7.6 Plus Elliptical. 15.7

[a] For sizes and loads beyond those shown in this table pipe may be supplied using special designs involving one or more of the following: wall thickness, high strength concrete, shear reinforcement, in accordance with the provisions of Section 10.

Steel areas may be interpolated between those shown for variations in diameter, loading, or wall thickness. Pipe over 96 in. (244 cm) in diameter shall have two circular cages or an inner circular plus one elliptical cage of the steel areas shown.

See Section 10 for provisions for alternate designs.

[b] The elliptical steel must be held in place by means of holding rods or chairs or other positive means throughout the entire length of the pipe and throughout the entire casting operation and remain in place until the concrete has taken its initial set.

[c] For these classes and sizes the minimum practical steel reinforcement is specified. The actual ultimate strength is greater than the minimum strength specified for nonreinforced pipe of equivalent diameters in the Specification for Concrete Sewer, Storm Drain, and Culvert Pipe (AASHO Designation: M 86).

and such temperature as may be needed to enable the pipe to meet the strength requirements. The curing chamber shall be so constructed as to allow full circulation of steam around the entire pipe.

16.3 *Water Curing*—Concrete pipe may be water-cured by covering with water saturated material or by a system of perforated pipes, mechanical sprinklers, porous hose,

TABLE 4
Design Requirements for Class IV Reinforced Concrete Pipe[a]

NOTE: See Section 3 for the basis of acceptance specified by the purchaser

The strength test requirements in pounds per linear foot of pipe under the three-edge-bearing method shall be either the D-load (test load expressed in pounds per linear foot per foot of diameter) to produce a 0.01-in. crack, or the D-loads to produce the 0.01-in. crack and the ultimate load as specified below, multiplied by the internal diameter of the pipe in feet.

D-load to produce a 0.01-in. crack	2000
D-load to produce the ultimate load	3000

Internal Diameter of Pipe, in.	Reinforcement, sq in. per linear foot of pipe wall											
	Wall A				Wall B				Wall C			
	Concrete Strength, 5000 psi				Concrete Strength, 4000 psi				Concrete Strength, 4000 psi			
	Wall Thickness, in.	Circular Reinforcement		Elliptical Reinforcement[b]	Wall Thickness, in.	Circular Reinforcement		Elliptical Reinforcement[b]	Wall Thickness, in.	Circular Reinforcement		Elliptical Reinforcement[b]
		Inner Cage	Outer Cage			Inner Cage	Outer Cage			Inner Cage	Outer Cage	
12	1¾	0.15			2	0.07						
15	1⅞	0.16			2¼	0.10						
18	2	0.17		0.15	2½	0.14		0.11				
21	2¼	0.23		0.21	2¾	0.20		0.17				
24	2½	0.29		0.27	3	0.27		0.23	3¾	0.07	0.07	0.08
27	2⅝	0.33		0.31	3¼	0.31		0.25	4	0.08	0.07	0.09
30	2¾	0.38		0.35	3½	0.35		0.28	4¼	0.09	0.07	0.10
33	•	..	..		3¾	0.27	0.20	0.30	4½	0.11	0.08	0.12
36	•	..	.		4	0.30	0.22	0.33	4¾	0.14	0.10	0.15
42	•	.			4½	0.35	0.26	0.39	5¼	0.20	0.15	0.22
48	•		..	.	5	0.42	0.32	0.47	5¾	0.26	0.20	0.29
54	•	..	.	.	5½	0.50	0.37	0.55	6¼	0.34	0.26	0.38
					Concrete Strength, 5000 psi							
60	•	..	...	..	6	0.59	0.45	0.66	6¾	0.41	0.31	0.46
66	•	...	..	..	6½	0.69	0.52	0.77	7¼	0.51	0.39	0.57
									Concrete Strength 5000 psi			
72	•	...	..	..	7	0.79	0.60	0.88	7¾	0.61	0.46	0.68
78	•	...	.		•				8¼	0.71	0.53	0.79
84	•	...	..	.	•				8¾	0.85	0.63	0.94
90	•	..	..		•				•			
96	•	.	..		•				•			
102	•	..	.		•				•			
108	•	...	.		•				•			

[a] For modified or special designs see Section 10.
Steel areas may be interpolated between those shown for variations in diameter, loading, or wall thickness
[b] The elliptical steel must be held in place by means of holding rods or chairs or other positive means throughout the entire length of the pipe and throughout the entire casting operation and remain in place until the concrete has taken its initial set.

or by any other approved method that will keep the pipe moist during the specified curing period.

16.4 The manufacturer may, at his option, combine the methods described in 16.2 and 16.3 as long as the required concrete compressive strength is attained.

16.5 A sealing membrane conforming to the requirements of the Specifications for Liquid Membrane-Forming Compounds for Curing Concrete (AASHO M 148) may be applied and should be left intact until the required strength requirements are met. The concrete at the time of application shall be within 5.5 C (10 F) of the atmospheric temperature. All surfaces shall be kept moist prior to the application of the compounds and shall be damp when the compound is applied.

LIFT HOLES

17.1 When agreed upon by the purchaser, lift holes, not more than two, shall be permitted in the wall of each piece of pipe for the purpose of handling and laying

PHYSICAL TEST REQUIREMENTS

TEST SPECIMENS

18.1 The specified number of pipe required for the tests shall be furnished without

TABLE 4A
Design Requirements for Class IV Reinforced Concrete Pipe[a]

NOTE: See Section 3 for basis of acceptance specified by purchaser.

The strength test requirements in kilograms per linear centimeter of pipe under the three-edge-bearing method shall be either the D-load (test load expressed in kilograms per linear centimeter per centimeter of diameter) to produce the 0.25-mm crack or the D-loads to produce the 0.25-mm crack and the ultimate load as specified below, multiplied by the internal diameter of the pipe in centimeters.

D-load to produce a 0.25-mm crack 0.976
D-load to produce the ultimate load 1.465

Internal Diameter of Pipe cm (in.)	Reinforcement, sq cm per linear m of pipe wall											
	Wall A				Wall B				Wall C			
	Concrete Strength, 352 kgf/sq cm				Concrete Strength, 281 kgf/sq cm				Concrete Strength, 281 kgf/sq cm			
	Wall Thickness, cm	Circular Reinforcement		Elliptical Reinforcement[b]	Wall Thickness, cm	Circular Reinforcement		Elliptical Reinforcement[b]	Wall Thickness, cm	Circular Reinforcement		Elliptical Reinforcement[b]
		Inner Cage	Outer Cage			Inner Cage	Outer Cage			Inner Cage	Outer Cage	
31 (12)	4.4	[c]	.		5.1	1.5		.	..	...	...	..
38 (15)	4.7	3.4			5.7	2.1	.		.	...		..
46 (18)	5.1	3.6		3.2	6.3	3.0	.	2.3	.	...	.	...
53 (21)	5.7	4.9		4.4	7.0	4.2		3.6		...	..	
61 (24)	6.3	6.1		5.7	7.6	5.7	.	4.9	9.5	1.5	1.5	1.7
69 (27)	6.6	7.0		6.6	8.2	6.6	.	5.3	10.1	1.7	1.5	1.9
76 (30)	7.0	8.0		7.4	8.9	7.4		5.9	10.8	1.9	1.5	2.1
84 (33)	[c]	.			9.5	5.7	4.2	6.3	11.4	2.3	1.7	2.5
91 (36)	[c]				10.1	6.3	4.7	7.0	12.1	3.0	2.1	3.2
107 (42)	[c]	.	.		11.4	7.4	5.5	8.3	13.3	4.2	3.2	4.7
122 (48)	[c]	.	.		12.7	8.9	6.8	9.9	14.6	5.5	4.2	6.1
137 (54)	[c]		.	..	14.0	10.6	7.8	11.6	15.9	7.2	5.5	8.0
					Concrete Strength, 352 kgf/sq cm							
152 (60)	[c]	.	.		15.2	12.5	9.5	14.0	17.1	8.7	6.6	9.7
168 (66)	[c]		.		16.5	14.6	11.0	16.3	18.4	10.8	8.3	12.0
									Concrete Strength, 352 kgf/sq cm			
183 (72)	[c]	..	...		17.8	16.7	12.7	18.6	19.7	12.9	9.7	14.4
198 (78)	[c]	.	.		[c]	.			21.0	15.0	11.2	16.7
213 (84)	[c]		.		[c]	. .		.	22.2	18.0	13.3	19.9
229 (90)	[c]				[c]	.		.	[c]			.
244 (96)	[c]				[c]	.			[c]	.	.	
259(102)	[c]		.		[c]				[c]		.	
274(108)	[c]				[c]				[c]	. ..		..

[a] For sizes and loads beyond those shown in the above table, pipe may be supplied using special designs involving one or more of the following: wall thickness, high strength concrete, shear reinforcement, in accordance with the provisions of Section 10.

[c] Steel areas may be interpolated between those shown for variations in diameter, loading, or wall thickness.

[b] The elliptical steel must be held in place by means of holding rods or chairs or other positive means throughout the entire length of the pipe and throughout the entire casting operation and remain in place until the concrete has taken its initial set.

See Section 10 for provisions for alternate designs.

[c] The manufacturer shall submit wall thickness, steel design, and concrete strength to the purchaser for approval prior to manufacture.

charge by the manufacturer and shall be selected at random by the purchaser, and shall be pipe that would not otherwise be rejected under these specifications. The selection shall be made at the point or points designated by the purchaser when placing the order.

NUMBER AND TYPE OF TEST REQUIRED FOR VARIOUS DELIVERY SCHEDULES

19.1 *Preiminary Tests for Extended Delivery Schedules.*—A purchaser of pipe, whose needs require shipments at intervals over extended periods of time, shall be entitled to such tests, preliminary to delivery of pipe, as are required by the type of basis of acceptance specified by the purchaser in Section 3, of not more than three sections of pipe covering each size in which he is interested.

19.2 *Additional Tests for Extended delivery Schedules.*—After the preliminary tests described in 19.1, a purchaser shall be entitled to additional tests in such numbers and at such times as he may deem necessary, provided that the total number of pipe tested (including preliminary tests) shall not exceed 1 per cent of the pipe delivered.

19.3 *Tests for Occasional Orders.*—A purchaser who places occasional orders shall be entitled to test a number of pipe not to exceed 2 per cent of an order, and not to exceed

TABLE 5

Design Requirements for Class V Reinforced Concrete Pipe[a]

NOTE. See Section 3 for the basis of acceptance specified by the purchaser.

The strength test requirements in pounds per linear foot of pipe under the three-edge-bearing method shall be either the D-load (test load expressed in pounds per linear foot per foot of diameter) to produce a 0.01-in. crack, or the D-loads to produce the 0.01-in. crack and the ultimate load as specified below, multiplied by the internal diameter of the pipe in feet.

D-load to produce a 0.01 in. crack	3000
D-load to produce the ultimate load	3750

Internal Diameter of Pipe, in	Reinforcement, sq in per linear foot of pipe wall											
	Wall A				Wall B				Wall C			
	Concrete Strength, 6000 psi				Concrete Strength, 6000 psi				Concrete Strength, 6000 psi			
	Wall Thickness, in.	Circular Reinforcement		Elliptical Reinforcement[b]	Wall Thickness, in.	Circular Reinforcement		Elliptical Reinforcement[b]	Wall Thickness, in.	Circular Reinforcement		Elliptical Reinforcement[b]
		Inner Cage	Outer Cage			Inner Cage	Outer Cage			Inner Cage	Outer Cage	
12	•				2	0.10						
15	•				2¼	0.14						
18	•				2½	0.19		0.16				
21	•				2⅝	0.24		0.21				
24	•				3	0.30		0.24	3⅜	0.12	0.09	0.13
27	•				3¼	0.38	0.28	0.42	4	0.14	0.11	0.16
30	•				3½	0.41	0.31	0.46	4¼	0.18	0.14	0.20
33	•				3¾	0.46	0.35	0.51	4½	0.23	0.17	0.25
36	•				4	0.50	0.38	0.56	4¾	0.27	0.20	0.30
42	•				4½	0.60	0.45	0.67	5¼	0.36	0.27	0.40
48	•				5	0.73	0.55	0.81	5¾	0.47	0.35	0.52
54	•				•				6¼	0.58	0.43	0.64
60	•				•				6¾	0.70	0.53	0.78
66	•				•				7¼	0.84	0.63	0.93
72	•				•				7¾	0.99	0.74	1.10
78	•				•				•			
84	•				•				•			
90	•				•				•			
96	•				•				•			
102	•				•				•			
108	•				•				•			

[a] For modified or special designs see Section 10

Steel areas may be interpolated between those shown for variations in diameter, loading, or wall thickness.

[b] The elliptical steel must be held in place by means of holding rods or chairs or other positive means throughout the entire length of the pipe and throughout the entire casting operation and remain in place until the concrete has taken its initial set.

five pieces of any one size; otherwise the number of pipe desired for testing shall be included in the order.

EXTERNAL LOAD CRUSHING STRENGTH TEST REQUIREMENTS

20.1 The load to produce an 0.01-in. crack or the ultimate load, as determined by the three-edge bearing method as described in the AASHO Methods T 33, Tests for Determining Physical and Chemical Properties of Culvert Pipe, Sewer Pipe, and Drain Tile shall be not less than that prescribed in Tables 1 to 5 for each respective class of pipe. Pipe that have been tested only to the formation of a 0.01-in. (0.25 mm) crack and that meet the 0.01-in. (0.25 mm) test load requirements shall be accepted for use.

20.2 *Retests of Pipe Not Meeting the External Load Crushing Strength Test Requirements.*—Pipe shall be considered as meeting the strength test requirements when all test specimens conform to the test requirements. Should any of the test specimens fail to meet the test requirements, the manufacurer shall be allowed a retest on two additional specimens for each specimen that failed, and the pipe shall be acceptable only when all of the retest specimens meet the strength requirements.

CONCRETE TEST REQUIREMENTS

21.1 *Compression Tests.*—Compression tests for satisfying the design concrete strength may be made on either standard rodded concrete cylinders or cylinders compacted and cured in like manner as the pipe, or on cores drilled from the wall of the pipe. If cylinders are tested, they shall be tested in accordance with the Method of Test for Compressive Strength of Molded Concrete Cylinders (AASHO Designation: T 22). The average compressive strength of all cylinders tested shall be equal to or greater than the design strength

TABLE 5A

Design Requirements for Class V Reinforced Concrete Pipe[a]

NOTE See Section 3 for basis of acceptance specified by purchaser

The strength test requirements in kilograms per linear centimeter of pipe under the three-edge-bearing method shall be either the D load test load expressed in kilograms per linear centimeter per centimeter of diameter) to produce the 0.25 mm crack, or the D loads to produce the 0.25 mm crack and the ultimate load as specified below, multiplied by the internal diameter of the pipe in centimeters

D load to produce a 0.25 mm crack .. 1.465

D load to produce the ultimate load . 2.441

Internal Diameter of Pipe, cm (in.)	Reinforcement, sq cm per linear m of pipe wall											
	Wall A				Wall B				Wall C			
	Concrete Strength, 422 kgf/sq cm				Concrete Strength, 422 kgf/sq cm				Concrete Strength, 422 kgf/sq cm			
	Wall Thickness, cm	Circular Reinforcement		Elliptical Reinforcement[b]	Wall Thickness, cm	Circular Reinforcement		Elliptical Reinforcement[b]	Wall Thickness, cm	Circular Reinforcement		Elliptical Reinforcement[b]
		Inner Cage	Outer Cage			Inner Cage	Outer Cage			Inner Cage	Outer Cage	
31 (12)	[c]				5.1	2.1						
38 (15)	[c]				5.7	3.0						
46 (18)					6.3	4.0		3.4				
53 (21)	[c]				7.0	5.1		4.4				
61 (26)	[c]				7.6	6.4		5.1	9.5	2.5	1.9	2.8
69 (27)	[c]				8.2	8.0	5.9	8.9	10.1	3.0	2.3	3.4
76 (31)	[c]				8.9	8.7	6.6	9.7	10.8	3.8	3.0	4.2
84 (33)	[c]				9.5	9.7	7.4	10.8	11.4	4.9	3.6	5.3
91 (36)	[c]				10.1	10.6	8.0	11.9	12.0	5.7	4.2	6.3
107 (42)	[c]				11.4	12.7	9.5	14.2	13.3	7.6	5.7	8.5
122 (48)	[c]				12.7	15.5	11.6	17.1	14.6	9.9	7.4	11.0
137 (54)	[c]				[c]				15.9	12.3	9.1	13.5
152 (60)	[c]				[c]				17.1	14.8	11.2	16.5
168 (66)	[c]				[c]				18.4	17.8	13.3	19.7
183 (72)	[c]				[c]				19.7	21.0	15.7	23.3
198 (78)	[c]				[c]				[c]			
213 (84)	[c]				[c]				[c]			
229 (90)	[c]				[c]				[c]			
244 (96)	[c]				[c]				[c]			
259 (102)	[c]				[c]				[c]			
274 (108)	[c]				[c]				[c]			

[a] For sizes and loads beyond those shown in the above table, pipe may be supplied using special designs involving one or more of the following wall thickness, high strength concrete, shear reinforcement, in accordance with the provisions of Section 10

Steel areas may be interpolated between those shown for variations in diameter, loading, or wall thickness.

[b] The elliptical steel must be held in place by means of holding rods or chairs or other positive means throughout the entire length of the pipe and throughout the entire casting operation and remain in place until the concrete has taken its initial set

[c] See Section 10 for provisions for alternate designs.

The manufacturer shall submit wall thickness, steel design, and concrete strength to the purchaser for approval prior to manufacture

Not more than 10 per cent of the cylinders tested shall fall below the design strength. In no case shall any cylinder tested fall below 80 per cent of the design strength. If cores are cut from the wall of the pipe and tested they shall be cut and tested in accordance with the requirements of AASHO Designation: T 33. The compressive strength of each core tested shall be equal to or greater than the design strength of the concrete. If a core does not meet the required strength, another core from the same pipe may be tested. If this core does not meet the required strength, that pipe shall be rejected. Additional tests shall be made on other pipe to determine the acceptability of the lot. When the cores cut from a section of pipe successfully meet the strength test requirement, the core-holes shall be plugged and sealed by the manufacturer in a manner such that the pipe section will meet all of the test requirements of these specifications. Pipe sections, so sealed shall be considered as satisfactory for use

21.2 *Absorption Test Requirements of Concrete.*—The absorption of a sample from the wall of the pipe, as determined in AASHO Designation: T 33, shall not exceed 8 per cent of the dry weight Each sample shall have a minimum weight of 100g, shall be free of visible cracks, and shall represent the full wall thickness of the pipe. Pipe shall be considered as conforming to these specifications for absorption when not less than 80 per cent of the number of specimens tested, including any retested, conform to the test requirements. When the initial absorption specimen from a pipe fails to conform to these specifications, the absorption test shall be made on another specimen from the same pipe and the results of the retest shall be substituted for the original test results.

21.3 *Retests of Pipe Not Meeting the Concrete Test Requirements.*—When not more than 20 per cent of the concrete test specimens fail to pass the requirements of the specification, the manufacturer may cull his stock and may eliminate whatever quantity of pipe he desires and must so mark those pipe that they will not be shipped. The required tests shall be made on the balance of the order and the pipe shall be accepted if they conform to the test requirements.

TEST EQUIPMENT

22.1 Every manufacturer furnishing pipe under these specifications shall furnish all facilities and personnel necessary to carry out the tests described in AASHO Designation: T 33.

PERMISSIBLE VARIATIONS IN DIMENSIONS

23.1 The internal diameter of 12- to 24-in (30.6 to 61.0 cm) pipe shall not vary more than ± 1.5 per cent from the design diameter. The internal diameter of 27- to 108-in. (69.0 to 274 cm) pipe shall not vary more than ± 1 per cent or 3/8 in. (9.6 mm), whichever is greater, from the design diameter. The wall thickness shall not be less than that shown in the design by more than 5 per cent or 3/16 in. (4.8 mm) whichever is the greater. A wall thickness more than that required in the design shall not be a cause for rejection. Pipes having localized variations in wall thickness exceeding those specified above shall be accepted if the three-edge bearing strength and minimum steel cover requirements are met.

23.2 *Permissible Variations in the Position of Reinforcement.*—The maximum variation in the nominal position of the reinforcement shall be ± 10 per cent of the wall thickness or ± 1/2 in. (12.7 mm), whichever is greater. Pipes having variations in the position of the reinforcement exceeding those specified above shall be accepted if the three-edge bearing strength requirements obtained on a representative specimen are met. In no case, however, shall the cover over the circumferential reinforcement be less than 1/2 in. (12.7 mm).

23.3 Where single cage circular reinforcement is used in circular pipe and for all elliptical cage reinforcement, a steel area that is not less than 97 per cent of that area shown in Tables 1 to 5 will be considered as meeting the design steel area. Where two circular cage reinforcements (one inner and one outer cage) are used, again referring to Tables 1 to 5, the inner cage steel area may vary to the lower limit of being not less than 85 per cent of the same design elliptical steel area, and the outer cage steel area may vary to the lower limit of being not less than 64 per cent of the same design elliptical steel area, provided that in no case shall the total steel area of the inner cage plus the outer cage be less than 153 per cent of the same design elliptical steel area. The above provisions of this paragraph shall apply only to pipe produced in accordance with section 9. For pipe produced in accordance with modified or special designs under Section 10, the area of steel reinforcement shall be not less than 97 per cent of the design steel area of each cage ring. Steel areas greater than those required for pipe produced in accordance with Sections 9 or 10 shall not be cause for rejection.

23.4 Variations in laying lengths (see '*L*' in Fig. 1 of AASHO Designation: T 33) of two opposite sides of pipe shall not be more than 1/8 in. (3.2 mm) per foot of diameter, with a maximum of 5/8 in. (15.9 mm) in any length of pipe, except where beveled end pipe for laying on curves is specified by the purchaser.

23.5 The underrun in length of a section of pipe shall not be more than 1/8 in. (3.2 mm) per foot with a maximum of 1/2 in. (12.7 mm) in any length of pipe.

FINISH

24.1 Pipe shall be substantially free of fractures, large or deep cracks, and surface roughness. The ends of the pipe shall be normal to the walls and center line of the pipe, within the limits of variations given in Section 23.

MARKING

25.1 The following information shall be clearly marked on each section of pipe:

25.1.1 The pipe class,

25.1.2 The date of manufacture, and

25.1.3 The name or trade-mark of the manufacturer.

25.1.4 One end of each section of pipe with elliptical reinforcement shall be clearly marked during the process of manufacturing or immediately thereafter, on the inside and the outside of opposite walls along the minor axes of the elliptical reinforcing. Markings shall be indented on the pipe section or painted thereon with waterproof paint.

INSPECTION

26.1 The quality of materials, the process of manufacture, and the finished pipe shall be subject to inspection and approval by an inspector employed by the purchaser.

REJECTION

27.1 Pipe shall be subject to rejection on account of failure to conform to any of the specification requirements. Individual sections of pipe may be rejected because of any of the following:

27.1.1 Fractures or cracks passing through the wall, except for a single end crack that does not exceed the depth of the joint.

27.1.2 Defects that indicate imperfect proportioning, mixing, and molding.

27.1.3 Surface defects indicating honeycombed or open texture.

27.1.4 Damaged ends, where such damage would prevent making a satisfactory joint.

REPAIRS

28.1 Pipe may be repaired, if necessary, because of occasional imperfections in manufacture or accidental injury during handling and will be acceptable if, in the opinion of the purchaser, the repairs are sound and properly finished and cured and the repaired pipe conforms to the requirements of these specifications.

———— o ————

Standard Specification for

Perforated Concrete Pipe

AASHO DESIGNATION: M 175-70 [1]

SCOPE

1.1 This specification covers perforated concrete pipe intended to be used for under drainage.

CLASSIFICATION

2.1 These specifications cover two types of arrangements of perforations which may be used with pipe manufactured according to any of the standard specifications for plain or reinforced concrete pipe, and any of the classifications within those standard specifications.

2.1.1 *Type 1* perforated pipe shall have circular perforations conforming to 5.1 and Table 1.

2.1.2 *Type 2* perforated pipe shall have slotted perforations conforming to 5.2 and Table 2.

METHOD OF SPECIFYING

3.1 It is intended that perforated pipe shall be specified by reference to this specification for the type and class of pipe desired.

NOTE 1.—Example—"Perforated concrete pipe shall conform to the requirements of AASHO M 175 Type 2, and all applicable requirements of AASHO Specification: M 86, For Concrete Sewer, Storm Drain, and Culvert Pipe, Table 2."

BASIS OF ACCEPTANCE

4.1 The acceptability of the pipe shall be determined by the results of all applicable tests (Note 2), prescribed for the type and class of pipe specified, and by inspection to determine whether the pipe conforms to these specifications as to design and freedom from defects.

NOTE 2.—It is intended that all tests will be applicable except those having to do with permeability in the hydrostatic test.

[1] Except for AASHO requirements regarding Perforations (Section 5) this specification agrees with ASTM: C 444-68.

PERFORATIONS

5.1 The perforations shall be approximately circular and clearly cut; shall have nominal diameters of not less than 3/16 inch (4.76 mm) nor greater than 3/8 inch (9.5 mm); and shall be arranged in rows parallel to the axis of the pipe. The perforations shall be approximately 3 inches (75 mm) center to center along the rows. The spigot end of bell and spigot pipe may be unperforated for a length equal to the depth of the socket.

5.1.1 The rows of perforations shall be arranged in two equal groups placed symmetrically on either side of a lower unperforated segment corresponding to the flow line of the pipe. The spacing of the rows shall be uniform. The distance between the center lines of rows shall be not less than 1 inch (25.4 mm).

5.1.2 The minimum number of longitudinal rows of perforations, the maximum heights of the centerlines of the uppermost rows above the bottom of the inverts and the inside surface chord lengths of the unperforated segments illustrated in Figure 1 shall be as specified in Table 1.

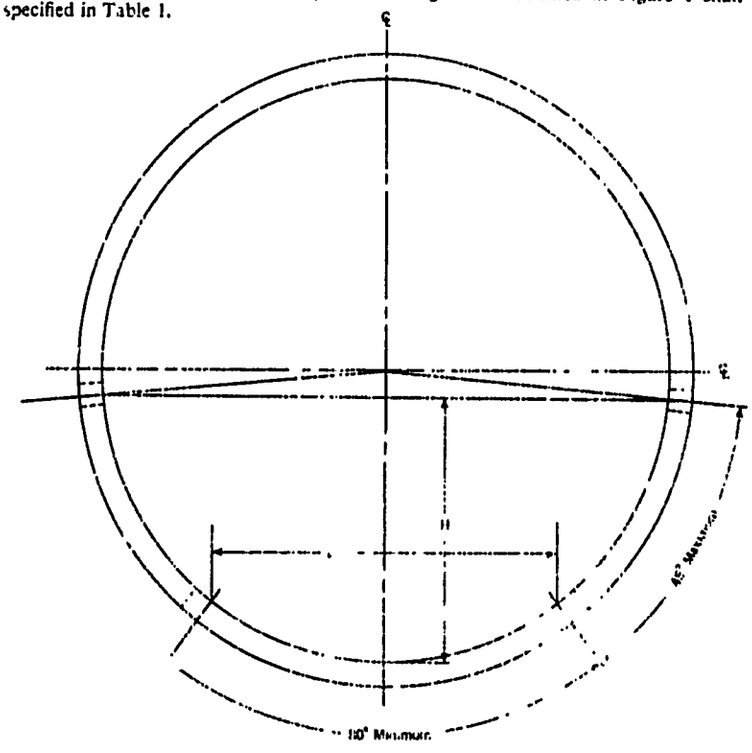

Fig 1 Requirements for Perforations

TABLE 1
Maximum Heights "H" of the Centerline of the Uppermost Rows Above the Bottom of the Invert and Minimum Lengths of Inner Surface "L" of Unperforated Segments

Diam. of Pipe, Inches (mm)	Min. Rows of Perforations	H Inches (mm)	L Inches (mm)
4 (102)	2	1 13/16 (46)	2 9/16 (58)
6 (152)	4	2 3/4 (70)	3 1/2 (88)
8 (203)	4	3 11/16 (94)	5 1/2 (130)
10 (254)	4	4 5/8 (116)	6 7/8 (164)
12 (305)	6	5 1/2 (140)	7 11/16 (195)
15 (381)	6	6 7/8 (175)	9 5/8 (244)
18 (457)	6	8 1/4 (210)	11 9/16 (294)
21 (533)	6	9 5/8 (244)	13 1/2 (143)
24 (610)	8	11 (279)	15 7/16 (392)

TABLE 2
Requirements for Length and Spacing of Slots

Nominal Size, Internal Diameter, in. (mm)	Length of Slot, in. (mm)	Spacing of Slots,[a] in. (mm)
4 (102)	1 (25.4)	3 (76)
6 (152)	1 1/2 (38.1)	3 (76)
8 (203)	2 (50.8)	4 (102)
10 (254)	2 (50.8)	4 (102)
12 (305)	3 (76.2)	6 (152)
14 (356)	3	6
15 (381)	3	6
16 (406)	3	6
18 (457)	3	6
20 (508)	3	6
21 (533)	3	6
24 (610)	3	6
27 (686) and larger	4 (102)	6

[a] See 5.2 for exception for plain end pipe

5.2 *Type 2*—Slots shall be circumferential in direction, not more than 3/16 in. (4.76 mm) or less than 1/8 in. (3.18 mm) in width, and of the lengths shown in Table 2. There shall be two rows of slots, spaced 165 deg. and centered, in the case of elliptically reinforced pipe, about the minor axis of the reinforcing. Slots shall be spaced as shown in Table 2, except as modified herein for plain-end pipe. The distance from the spigot end, or from the shoulder of the tongue end, to the first pair of slots shall be not more than 1 in. (25.4 mm) greater than the specified slot spacing, nor less than 1 in. (25.4 mm) less than the specified slot spacing. Slots shall continue at uniform spacing along the entire length of the barrel.

5.2.1 Slots in plain-end pipe shall be spaced as shown in Table 2 except that smaller spacing shall be used where necessary to provide not less than three equally spaced slots in each row. Slots shall be centered with respect to the ends of the pipe and there shall be not more than the specified slot spacing from the pipe end to the first pair of slots, or less than one half of the slot spacing employed.

PERMISSIBLE VARIATION IN DIMENSIONS

6.1 The permissible variation in circular perforation size or slot width shall be as specified in 5. Perforations. Slot lengths may be varied +1/4 in. (6.35 mm) or −1/8 in. (3.18 mm). Variation in row spacing, or in the spacing of holes or slots in any row, may be ±1/2 in. (12.7 mm) except as may be required to provide specified cover for reinforcing steel.

JOINTS

7.1 The ends of the pipe shall be so formed that when the pipe are laid together and joined, they will make a continuous and uniform line of pipe with a smooth and regular interior surface. The joints shall be of such design as will permit effective placement, without appreciable irregularities in the flow line.

INSPECTION

8.1 Each length of pipe shall be subject to inspection at the factory, trench, or other point of delivery by a competent inspector employed by the purchaser. The purposes of the inspection shall be to cull and reject pipe that, independent of the physical tests herein specified, fails to conform to the requirements of these specifications.

REJECTION

9.1 Pipe shall be subject to rejection on account of any of the applicable causes for rejection listed for the type and class of pipe specified, or

9.1.1 Variations in dimension exceeding those specified in 5. Perforations, and 6 Permissible Variation in Dimensions, or

9.1.2 Any spall more than ¾ in. (19.05 mm) in diameter or 3/10 in. (4.76 mm) in depth caused by making perforations or slots.

MARKING OF REJECTED SPECIMENS

10.1 All rejected pipe shall be plainly marked by the inspector and shall be replaced by the manufacturer or seller with pipe that will meet the requirements of these specifications, without additional cost to the purchaser.

REPAIRS

11.1 Pipe may be repaired, if necessary, because of occasional imperfections in manufacture or accidental injury during handling, and will be acceptable if, in the opinion of the purchaser, the repairs are sound and properly finished and cured and the repaired pipe conforms to the requirements of these specifications.

———o———

Standard Specification for

Concrete Drain Tile

AASHO DESIGNATION: M 178–65

(ASTM DESIGNATION: C 412–65)

SCOPE

1.1 This specification covers nonreinforced concrete drain tile with internal diameters from 4 to 24 in.

CLASSES

2.1 Drain tile manufactured according to this specification shall be of the following three classes:

2.1.1 *Standard-Quality Concrete Drain Tile*, intended for land drainage of ordinary soils where the tile are laid in trenches of moderate depths and widths. Standard-quality concrete drain tile are not recommended for use where internal diameters in excess of 12 in. are required.

2.1.2 *Extra-Quality Concrete Drain Tile*, intended for land drainage of ordinary soils where the tile are laid in trenches of considerable depths or widths, or both.

2.1.3 *Special-Quality Concrete Drain Tile*, intended for land drainage where special precautions are necessary for concrete tile laid in soils that are markedly acid or contain unusual quantities of sulfates (see Section 9), and where the tile are laid in trenches of considerable depths or widths or both (Note 1).

NOTE 1.—Where the calculated loads are in excess of the crushing strengths prescribed in Table 3, tile strengths must be specified in advance by the purchaser.

BASIS OF PURCHASE

3.1 The purchaser shall specify in writing the class or classes of concrete tile to be supplied, whether Standard-Quality, Extra Quality or Special Quality. Unless Extra-Quality or Special-Quality concrete drain tile have been stipulated, Standard-Quality drain tile shall be accepted.

BASIS OF ACCEPTANCE

4.1 The acceptability of drain tile shall be determined by (*1*) the results of the physical tests as specified in Section 19 and in the Methods of Test for Determining Physical Properties of Concrete Pipe or Tile (AASHO T 33), (*2*) measurements and inspection to ascertain whether the tile conform to the requirements regarding dimensions, shape, and freedom from visible defects, and (*3*) the manufacturer's certification in writing that the tile have been made in accordance with any special provisions, such as strength, absorption, permeability, type of cement admixture, curing conditions, etc.

MATERIALS

CONCRETE

5.1 The concrete shall consist of portland cement, mineral aggregates and water, and may include admixtures and blends as described in Section 8.

CEMENT

6.1 Portland cement for concrete drain tile shall conform to the requirements of the Specifications for Portland Cement (AASHO M 85), or shall be air-entraining portland cement conforming to the requirements of the Specifications for Air-Entraining Portland Cement (AASHO M 134), or shall be portland blast-furnace slag cement conforming to the requirements of the Specifications for Portland Blast-Furnace Slag Cement (AASHO M 151).

AGGREGATES

7.1 The aggregates for concrete drain tile shall conform to the Specifications for Concrete Aggregates (AASHO M 6 and M 80), except that the requirements for gradation shall not apply and a loss of 50% in the Los Angeles Test shall be permitted.

ADMIXTURES AND BLENDS

8.1 Admixtures or blends that have been proven to impart desirable properties to concrete drain tile may be used with the approval of the purchaser.

CHEMICAL REQUIREMENTS

ACID AND SULFATE RESISTANCE

9.1 The purchaser may specify special requirements in order to increase the durability of the drain tile in cases where the soils, soil water, or drainage waters are markedly

acid (Note 2) or contain unusual quantities of soil sulfates (Note 3). Without a specific agreement in advance, no drain tile shall be rejected by reason of its composition as determined later by chemical analyses.

9.2 Concrete drain tile that will be installed in markedly acid soils shall meet the physical test requirements given in Table 3 for Special-Quality concrete drain tile. Tile that will be exposed to unusual quantities of soil sulfates shall meet the physical test requirements given in Table 3 and shall be made with sulfate-resistant cements.

9.3 Type V portland cement shall be used where high-sulfate resistance is required, and types II and IIA portland cement shall be used for general concrete construction exposed to moderate sulfate conditions. If mutually agreed by the manufacturer and the purchaser, other cements, as described in Secion 6, that have been proven to be sulfate resistant may be used.

NOTE 2.—Soils or drainage waters with a pH of 6.0 or lower may be considered to be markedly acid.

NOTE 3.—Where the sulfates are chiefly sodium or magnesium, singly or in combination, unusual quantities of these sulfates may be assumed to be 3000 ppm (0.30 per cent) for soil or soil water.

PHYSICAL TEST REQUIREMENTS

PHYSICAL TESTS

10.1 The physical properties of concrete drain tile shall conform to the requirements specified in Table 1, or, when specified by the purchaser in advance, they shall conform to the requirements given in Tables 2 and 3.

M 178
TABLE 1
Physical Test Requirements for Standard-Quality Concrete Drain Tile

Nominal Inside Diameter, in.	Standard-Quality Concrete Drain Tile				
	Three-Edge Bearing Crushing Strength[a]			Absorption, boiled 5 hr	
	Minimum Average, lb per lin ft		Minimum for Individual Tile, lb per lin ft	Maximum Average, per cent	Maximum for Individual Tile, per cent
	A	B	A and B	B	B
4	900	800	700	10	11
5	900	800	700	10	11
6	900	800	700	10	11
8	900	800	700	10	11
10	900	800	700	10	11
12[b]	900	800	700	10	11

[a] Drain tile meeting the above strength requirements are not necessarily safe against cracking in deep and wide trenches.

[b] Tile with nominal diameters greater than 12 in. should meet the requirements specified in Table 2 for Extra-Quality or in Table 3 for Special-Quality concrete drain tile.

M 178

TABLE 2

Physical Test Requirements for Extra-Quality Concrete Drain Tile

Nominal Inside Diameter, in.	Extra-Quality Concrete Drain Tile				
	Nominal Wall Thickness, in	Three-Edge Bearing Crushing Strength[a]		Absorption, boiled 5 hr	
		Minimum Average, lb per lin ft	Minimum for Individual Tile, lb per lin ft	Maximum Average, per cent	Maximum for Individual Tile, per cent
4	1/2	1100	990	9	10
5	9/16	1100	990	9	10
6	5/8	1100	990	9	10
8	3/4	1100	990	9	10
10	7/8	1100	990	9	10
12	1	1100	990	9	10
14	1 1/8	1100	990	9	10
15	1 1/4	1100	990	9	10
16	1 3/8	1100	990	9	10
18	1 1/2	1200	1080	9	10
20	1 5/8	1300	1170	9	10
21	1 3/4	1400	1260	9	10
24	2	1600	1440	9	10

[a] For loads in excess of the supporting strengths shown in the above table, tile may be supplied using designs involving the increase of wall thickness or the use of higher strength concrete

10.1.1 For Standard-Quality concrete drain tile, the three-edge bearing crushing strength as shown in Table 1, Column A, or the three-edge bearing crushing strength and the 5-hr boiling absorption as shown in Table 1, Column B, shall meet the requirements given in Table 1. No absorption tests are required if the strength requirements of Table 1, Column A, are met.

10.1.2 For Extra-Quality concrete drain tile, the three-edge bearing crushing strength and the 5-hr boiling absorption shall meet the requirements given in Table 2.

10.1.3 For Special-Quality concrete drain tile the requirements shall be as follows:

10.1.3.1 The three-edge-bearing crushing strength shall meet the requirements given in Table 3, or the higher specified load.

10.1.3.2 The 5-hr boiling absorption shall meet the requirements given in Table 3.

10.1.3.3 The 10-min, room temperature soaking absorption shall meet the requirements given in Table 3.

10.1.3.4 The hydrostatic test shall be made, when demanded, in lieu of the 10-min room temperature soaking absorption tests. The leakage shall not exceed 3 liters in 10 min per m of length of tile for all diameter sizes.

10.1.3.5 For sulfate exposures, sulfate-resistant cement shall be specified (see Section 9).

SELECTION OF TILES FOR TESTS

11.1 The drain tile to be tested shall be selected at random by the purchaser or his representative at the point or points specified in the order. If agreeable to the purchaser, the tile may be inspected and tested in advance of shipment. Any additional expense for making tests and inspection in advance of shipment shall be paid by the manufacturer or other seller.

NUMBER AND COST OF TILE FOR TESTS

12.1 Each standard physical test shall be made on five individual tile of each size. The manufacturer, or other seller, shall furnish tile without separate charge up to 0.5 percent of each size. The purchaser shall pay for all tile in excess of 0.5 per cent at the same price as paid for other tile of the same size and quality.

M 178
TABLE 3
Physical Test Requirements for Special-Quality Concrete Drain Tile

Nominal Inside Diameter, in.	Special-Quality Concrete Drain Tile (For tile exposed to corrosive waters)					
	Minimum Wall Thickness, in.	Minimum Individual Three-Edge-Bearing Crushing Strength,[a] lb per lin ft	Absorption			Sulfate Exposures
			Boiled 5 hr		Soaked 10 min at Room Temperature	
			Maximum Average, per cent	Maximum for Individual Tile, per cent	Maximum for Individual Tile, per cent	
4	3/8	1100	8	9	3	For sulfate exposures sulfate-resistant cements should be specified (see Section 9).
5	5/16	1100	8	9	3	
6	3/8	1100	8	9	3	
8	3/8	1100	8	9	3	
10	3/8	1100	8	9	3	
12	1	1100	8	9	3	
14	1 1/8	1100	8	9	3	
15	1 1/4	1100	8	9	3	
16	1 3/8	1100	8	9	3	
18	1 1/2	1200	8	9	3	
20	1 5/8	1300	8	9	3	
21	1 3/4	1400	8	9	3	
24	2	1600	8	9	3	

[a] For loads in excess of the support strengths shown in the above table, tile may be supplied using designs involving the increase of wall thickness or the use of higher strength concrete.

RETESTS

13.1 Should the tile first selected fail to conform to the test requirements, the seller may, at his expense, cull the tile and have other tile selected for retest from the remaining stock. For such retests, the number of tile shall be ten for each standard physical test. In the event of failure of the tile after retest, the tile shall be rejected without further test. The manufacturer, or other seller, shall pay all costs for any retest demanded and made.

SHAPES, SIZES, AND PERMISSIBLE VARIATIONS

SHAPE

14.1 All drain tile shall be circular in cross-section, except when otherwise specified in advance. They shall be approximately straight, except in the case of special connections. The ends of butt-end tile shall be so regular and smooth as to readily admit the making of satisfactory close joints. Other than butt-end tile may be furnished when mutually agreed between the manufacturer, or other seller, and the purchaser.

NOMINAL DIMENSIONS AND PERMISSIBLE VARIATIONS

15.1 Permissible variations of the nominal dimensions of diameter, length, and wall thickness, are as follows:

15.1.1 Minimum internal diameters shall not be less than the nominal diameters by more than 1/4 in. for 4- and 5-in. tile, 3/8 in. for 6- and 8 -in. tile, 1/2 in. for 10- to 14-in. tile, 5/8 in. for 15- to 18-in. tile, and 3/4 in. for sizes of 20- to 24-in. tile.

15.1.2 The nominal length of drain tile smaller than 12-in. diameter shall be not less than 12 in. Tile of 12-to 24-in. diameter, inclusive, shall have nominal lengths not less than the diameters. The underrun of individual tile shall not exceed 3 per cent of the nominal length.

15.1.3 No wall thickness is specified for Standard-Quality concrete drain tile where the crushing strength and the absorption tests are used to determine the tile quality. When only the crushing strength is used to determine Standard-Quality tile, then the wall thickness for Standard-Quality tile shall not exceed the nominal shell thickness given in Table 2 by more than 25 per cent. The wall thickness of Extra-Quality concrete drain tile at any point shall not be less than the full thickness specified in Table 2 by more than 1/10 in. for tile having

inside diameters of 4, 5, and 6 in., 3/32 in. for tile having inside diameters of 8 and 10 in., and 1/4 in for tile having inside diameters of 12 to 24 in. The minimum thickness of Special-Quality drain tile walls at any point shall be not less than shown in Table 3.

INSPECTION

GENERAL PROPERTIES

16.1 All drain tile shall be given a thorough inspection at the agreed delivery point by an inspector approved by the purchaser, unless a satisfactory inspection has been made in advance of delivery as specified in Section 12. The purpose of the inspection shall be to determine whether the tile, independently of meeting the physical test requirements, conform to the specifications as regards shapes and sizes as prescribed in Sections 14 and 15, and to eliminate defective tile as defined in Section 17. The manufacturer, or other seller, of the drain tile shall afford the inspector all reasonable facilities for his work, both as to the selection of tile for tests and as to inspection of the tile. Inspection shall be completed and reported promptly and full reports of all tests and inspections shall be furnished the manufacturer or other seller on his request.

DEFECTIVE TILE.

17.1 Drain tile that, when placed in a vertical position, do not give a metallic ring when struck with a light metal hammer, or that are observed to have cracks that extend through the tile wall and are of a length in excess of 1/2 in. or other defects that may impair the tile strength shall be discarded without further test Outside surface irregularities that do not affect the tile strength shall not be considered reason for the rejection of the tile.

REJECTION

18.1 The inspector shall plainly designate all drain tile that he rejects, and such rejected tile shall be removed promptly by the manufacturer, or other seller, from any job to which the tile has been delivered.

TEST METHODS

Absorption Tests

TEST SPECIMENS

19.1 Specimens for the absorption tests shall be selected in accordance with the following provisions:

19.1.1 For tile with nominal inside diameters of 12 in. or less, and nominal lengths of 12 in., the absorption test shall be made on one full-length quarter segment taken from each of the five tile broken in the strength test, constituting a standard sample as defined in Section 12. By quarter segment is meant one of the four pieces into which a tile usually breaks in the strength test If a tile breaks in such a manner that a satisfactory quarter segment cannot be obtained, then the absorption test may be made of two or more pieces that approximate the area of a quarter tile of that size, selected so that both ends and the center portion of the tile are represented. The average absorption of the pieces so selected shall be considered the absorption for that tile.

19.1.2 For tile with nominal inside diameters or lengths in excess of 12 in., the absorption test shall consist of three pieces, one of the pieces shall be taken from one end of the tile, another piece from the opposite end, and the third piece from near the center. The specimens shall be the full thickness of the tile, broken or cut from the tile broken in the strength test. Each specimen shall have a minimum area of not less than 25 sq. in., as measured on one barrel surface. The average absorption of the three pieces shall be considered the absorption for that tile.

19.1.3 All absorption test specimens shall be apparently sound, solid pieces of the tile and shall not show cracks or badly shattered edges.

19.1.4 The average absorption for the Standard-Quality tile and for the Extra-Quality tile shall be the average of the absorption tests for the 5 tile constituting the standard sample as defined in Section 12, or the average of the absorption tests for the strongest and the weakest tile as measured by the crushing strength of the 5 tile of the standard sample. When drain tile fail to meet the absorption test requirement as computed by averaging the absorptions from the weakest and the strongest tile of a standard sample, then the average absorption test shall be computed by averaging the absorption tests from all the five tile from the standard sample. The average absorption for the Special-Quality tile shall be the average of the absorption tests for the 5 tile constituting the standard sample.

PROCEDURE

20.1 All tests shall be made in accordance with the Methods of Test for Determining Physical Properties of Concrete Pipe or Tile (AASHO T 33).

———— o ————

Standard Specification for

Clay Drain Tile

AASHO DESIGNATION: M 179–67

(ASTM DESIGNATION: C 4–62) [1]

SCOPE

1.1 This specification covers drain tile made from clay, shale, fire clay, or mixtures thereof, and burned. In this specification, the term drain tile or tile shall mean tile made only from these materials.

CLASSIFICATION

2.1 Three types of drain tile are covered:
2.1.1 Type I, Standard Drain Tile,
2.1.2 Type II, Extra-Quality Drain Tile, and
2.1.3 Type III, Heavy-Duty Drain Tile

2.2 Unless otherwise specified by the purchaser, Type II or Type III Drain Tile shall be accepted in lieu of Type I Drain Tile, and Type III Drain Tile in lieu of Type II. Type I Drain Tile may be furnished and shall be considered as meeting these specifications unless another class is specified by the purchaser.

PHYSICAL REQUIREMENTS

3.1 Drain tile shall conform to the physical requirements for the class specified as prescribed in Table 1.

3.2 *Waiver of Absorption Requirements.* Requirements prescribed in Table 1 for water absorption (5-hr boiling) shall be waived provided a sample consisting of five drain tile, meeting all other requirements, shows no disintegration or spalling and no loss in dry weight of any individual tile greater than 5 per cent when subjected to the freezing and thawing test, made as prescribed in AASHO T 33. The number of cycles of freezing and thawing to which each class of tile shall be subjected are:

Type	Number of Cycles
I Standard	3
II Extra Quality	4a
III Heavy-Duty	4b

[1] ASTM C 4-62 differs in format only.

TABLE 1
Physical Test Requirements for Clay Drain Tile

Internal Diameter of Tile, in.	Standard Drain Tile				Extra-Quality Drain Tile				Heavy-Duty Drain Tile			
	Minimum Crushing Strength,[a] lb per lin ft		Maximum Water Absorption by 5-hr Boiling,[b] per cent		Minimum Crushing Strength,[a] lb per lin ft		Maximum Water Absorption by 5-hr Boiling,[b] per cent		Minimum Crushing Strength,[a] lb per lin ft		Maximum Water Absorption by 5-hr Boiling,[b] per cent	
	Average of five Tile	Individual	Average of five Tile	Individual	Average of five Tile	Individual	Average of five Tile	Individual	Average of five Tile	Individual	Average of five Tile	Individual
4	800	680	13	16	1100	990	11	13	1400	1260	11	13
5	800	680	13	16	1100	990	11	13	1400	1260	11	13
6	800	680	13	16	1100	990	11	13	1400	1260	11	13
8	800	680	13	16	1100	990	11	13	1500	1350	11	13
10	800	680	13	16	1100	990	11	13	1550	1400	11	13
12	800	680	13	16	1100	990	11	13	1700	1530	11	13
14	840	720	13	16	1100	990	11	13	1850	1660	11	13
15	870	740	13	16	1150	1030	11	13	1980	1780	11	13
16					1200	1080	11	13	2100	1890	11	13
18					1300	1170	11	13	2340	2110	11	13
21					1450	1300	11	13	2680	2410	11	13
24					1600	1440	11	13	3000	2700	11	13
27					1800	1620	11	13	3330	3000	11	13
30					2000	1800	11	13	3600	3230	11	13

[a] Strengths of sizes not listed may be interpolated between tabular values of sizes and strengths of the nearest listed diameters.
[b] In case tile fails to meet absorption requirements, see Section 3.2.

3.2.1 If tile meet the requirements of the freezing and thawing test, the average percentage absorption of the specimens used in the test shall be adopted as the maximum allowable average absorption for the contract in question. At least 80 per cent of all tile tested shall meet the requirements prescribed in 3.2.

SIZES

4.1 Sizes of drain tile shall be designated by their inside diameters.

4.2 Drain tile smaller than 12 in. in diameter shall have a nominal length of not less than approximately 12 in. Tile 12 to 30 in. in diameter, inclusive, shall have nominal lengths not less than their diameters. Tile larger than 30 in. in diameter shall have a nominal length of not less than 30 in.

MATERIALS, WORKMANSHIP, AND FINISH

5.1 Presence in drain tile of any minerals or chemicals that are known to cause slaking or disintegration of the tile shall be deemed valid grounds for rejection, unless satisfactory proof is submitted that the tile are durable and permanent.

5.2 Drain tile shall be free from cracks, checks, or chips extending into the body of the tile in such a manner as would decrease the strength appreciably. There shall be no breaks in the tile that would admit earth into the drain.

5.3 Drain tile shall be reasonably smooth on the inside and shall be approximately circular in cross-section, except when otherwise specified in advance. They shall be approximately straight, except in the case of special connections. The ends of butt-end tile shall be so regular and smooth as to make possible close joints by turning and pressing together the ends of adjoining tile. Butt-end tile shall be furnished unless otherwise specified by the purchaser.

5.4 Drain tile shall conform to the general physical characteristics prescribed in Table 2.

INSPECTION AND REJECTION

6.1 All drain tile shall be given a thorough inspection by a competent inspector approved by the purchaser. The tile shall be inspected at a location and time agreed upon by the purchaser and seller. The purposes of the inspection shall be to (1) cull and reject imperfect individual tile, and (2) determine whether the tile, by visual inspection, meet the requirements set forth in 5 and 6.

6.2 Drain tile in a dry condition shall give a clear ring when held free of the ground or tipped on edge, and tapped lightly with a hammer that has a head not exceeding 4 oz. in weight.

6.3 The seller may appeal from decisions of the inspector when such decisions are based on visual in[illegible]tion alone, in which case the point of issue shall be determined by standard physical tests made in accordance with AASHO T 33. Costs of such tests based on an appeal [illegible] be paid by the seller if the tests confirm the inspector's decision; otherwise, the [illegible]ts shall be paid by the purchaser.

TABLE 2
Distinctive General Physical Properties of Clay Drain Tile

Physical Properties Specified	Standard Drain Tile	Extra-Quality Drain Tile	Heavy-Duty Drain Tile
Permissible variation of average diameter below specified diameter, per cent	3	3	3
Permissible variation between maximum and minimum diameters of same tile, percentage of thickness of wall	75	65	65
Permissible variation of average length below manufacturer's specified length per cent	3	3	3
Per[illegible] percentage of length	3	3	3
P[illegible] lumps and flakes which do [illegible], percentage of thickness of wall	20	15	15
Permissible diameters of above blisters, lumps, and flakes, percentage of inside diameter	15	10	10
General inspection	rigid	very rigid	very rigid

6.4 The inspector shall plainly mark all rejected drain tile, which shall be removed promptly by the seller at the expense of the seller.

6.5 No drain tile shall be rejected by the purchaser on the basis of physical tests unless the laboratory test report is made available to the seller.

SAMPLING AND TESTING

7.1 Tile shall be tested in accordance with AASHO T 33.

7.2 For purposes of the test, full-size, unbroken drain tile shall be selected by the purchaser or by his authorized representative. Specimens shall be representative of the whole lot of tile from which they are selected, after culling undesirable tile which fail to meet visual inspection requirements. The place or places of selection shall be designated when the purchase order is issued. The manufacturer or seller shall furnish specimens for test without charge.

7.3 Each specimen shall be so marked that it may be identified at any time.

7.4 Unless otherwise specified in the purchase order, costs of tests shall be paid as follows:

7.4.1 If results of tests show that tile do not conform to the requirements of these specifications, the cost shall be paid by the seller.

7.4.2 If results of tests show that tile do conform to requirements of these specifications, the cost shall be paid by the purchaser, except that in the case of the freezing and thawing tests, when specifically requested by the seller in order to justify waiver of absorption requirements, the cost of tests shall be paid by the seller.

7.5 Should the standard sample of tile selected as prescribed in 7.1 fail to conform to physical requirements prescribed in 3, the seller may, at his expense, cull the tile and have other tile selected for retest from the remaining stock. Selection of specimens for the purpose of retest shall be made as prescribed in 7.1 and 7.2, except that the number of tile sampled be ten per standard physical test. If the tile selected fail to meet the requirements in the retest, the lot may be rejected by the purchaser as not meeting these specifications. The seller shall pay all costs for any retesting he demands.

SELECTION OF SPECIMENS

8.1 Crushing Strength Tests

8.1.1 Five unbroken, full-size drain tile of each specified size shall be selected for testing.

8.1.2 Drain tile with nominal inside diameter of 12 in. or less shall be immersed in water for at least 1 hr and not more than 2 hr immediately prior to testing. Tile with nominal inside diameters greater than 12 in. may be tested without wetting but shall not be dried except as may occur in complying with the provisions in 8.1.3.

8.1.3 No specimen of tile shall be exposed to water or air temperature lower than 4.4 C (40 F) from the beginning of wetting until tested. Frozen tile shall be completely thawed before being tested.

8.2 Absorption Test. Test Specimens shall consist of segments taken from each of the five tile broken in the strength test.

BASIS OF ACCEPTANCE

9.1 Acceptability of the tile shall be determined by (1) measurements and visual inspection as prescribed in Sections 6 and 7, and (2) compliance with the physical requirements as prescribed in 3.

9.2 Acceptance of drain tile as satisfactorily meeting one of the two general requirements in 9.1 shall in no way be construed as a waiver of the other.

———— o ————

Standard Specification for

Corrugated Sheet Steel Beams For Highway Guardrail

AASHO DESIGNATION: M 180–70

SCOPE

1.1 This specification covers corrugated sheet steel prepared for use as beams in highway guardrails. Two classes and four types of guardrail are provided as follows:

1.1.1 Classes

Class A—Base metal nominal thickness—0.105".
Class B—Base metal nominal thickness—0.135".

1.1.2 Types

Type 1—Zinc coated, 1.80 ounces per square foot, minimum single-spot.
Type 2—Zinc coated, 3.60 ounces per square foot, minimum single-spot.
Type 3—Beams to be painted.
Type 4—Beams of corrosion resistant steel.

BASIS OF PURCHASE

2.1 Orders for guardrail under this specification shall include the following information, as required, to described adequately the desired material.

2.1.1 Quantity (linear feet or number of pieces)
2.1.2 Class of Guardrail
2.1.3 Type of Guardrail
2.1.4 Effective length of beam sections (12'-6" or 25'-0")
2.1.5 Exceptions to this specification, or special requirements, if any.

BASE METAL MANUFACTURE

3.1 The beam elements shall consist of sheet made of open hearth, electric furnace, or basic oxygen steel.

3.2 Mechanical Properties

3.2.1 The mechanical properties of the base metal for beams shall conform to the following tensile requirements:

Yield Point, minimum, 50,000 psi.
Tensile Strength, minimum, 70,000 psi.
Elongation, 2 inch, minimum, 12 percent.

3.2.2 Test specimens for mechanical properties shall be prepared and tested as specified in ASTM A 525 except that correction for thickness of zinc coated specimens shall be 0.003" for Type 1 beam and 0.006" for Type 2 beam.

3.3 Chemical Composition

3.3.1 The chemical composition of the base metal for Type 4 beams shall be as approved by the Engineer.

SHEET OR BEAM THICKNESS

4.1 The nominal thickness for the finished beam or sheet shall conform to the requirements as prescribed in Table 1.

4.2 For fabricated beams, thickness measurements will be made on tangent portions of the cross-section.

SHEET WIDTH

5.1 The beam elements shall be formed from sheets having a nominal width of 19 inches. Tolerance from the nominal width of minus ⅛ inch will be permissible.

NOTE: The requirements of paragraph 5.1 are intended to define the minimum width sheet permissible. Calculation of exact width dimensions from figure 1 shows that the finished product may slightly exceed 19 inches. However, the dimensions of figure 1 can be met within allowable tolerances by using the 19 inch width. Use of sheets slightly greater than 19 inches wide is permissible provided the tolerance in Figure 1 are met.

GALVANIZED BEAMS

6.1 The beams may be galvanized before or after fabrication. The zinc used for the coating shall be as prescribed in AASHO: M 120, and shall be at least equal to the grade designated as "Prime Western."

6.2 The weight of coating shall conform to the requirements prescribed in Table 2 for the types specified. The weight of coating is the total amount of galvanizing on both sides of a sheet or beam, expressed as ounces per square foot of sheet.

6.3 The sheets or beams shall be of prime finish, that is, free from injurious defects such as blisters, flux, and uncoated spots. Uncoated edges resulting from shearing or punching will not be considered objectionable.

6.4 The coating shall be smooth, free of beading or sharp projections along the edges and shall adhere tenaciously to the surface of the metal. The adherence of the zinc coating to the surface of the base metal shall be determined by cutting or prying with a stout knife, applied with considerable pressure in a manner tending to remove a portion of the coating by paring or whittling, and it shall not be possible to peel any portion of the coating so as to expose the base metal.

6.5 The test specimen size and method of tests for determining the weight of coating shall be as prescribed in AASHO: T 65. At the option of the Engineer, material may be accepted on the basis of magnetic gage determinations made in accordance with ASTM: E 376.

PAINTED BEAMS

7.1 Beams which are to be painted shall be cleaned and shop painted with one coat of an approved, rust-inhibitive primer. The primer shall have a tough and durable surface and shall be thoroughly dry before the sheets are handled or packed for shipment.

CORROSION RESISTANT BEAMS

8.1 Beams of corrosion resistant steel shall be painted or galvanized. They shall be so handled and stored that the traffic face of these beams, used in a continuous run of guardrail, shall not show a distinctive color differential.

TABLE 1

Type	Beam or Sheet Thickness			
	Class A		Class B	
	Thickness (Inch)	Tolerance under specified thickness, inch. No limit for over thickness	Thickness (Inch)	Tolerance under specified thickness, inch. No limit for over thickness
1	0.108	0.009	0.138	0.010
2	0.111	0.009	0.141	0.010
3	0.105	0.009	0.135	0.010
4	0.105	0.009	0.135	0.010

TABLE 2

Type	Weight of Coating	
	Min Check Limit Single-Spot Test Oz Per Sq Ft	Min Check Limit Triple-Spot Test Oz Per Sq Ft (1)
1	1.80	2.00
2	3.60	4.00

(1) This requirement applies only when specifically requested.

END OR BUFFER SECTIONS

9.1 End or buffer sections for the beam shall consist of sheet made of open hearth, electric furnace or basic oxygen steel. The section shall be of the same or superior Class and Type used for the beam to which it is attached or the Engineer may specify the minimum thickness of metal and weight of galvanizing.

FABRICATION

10.1 The beams and end or buffer sections shall be shaped and punched in conformance with the requirements shown in Figure 1. They shall be ready for assembly when delivered. Only drilling or cutting necessary for special connections and for sampling will be permitted in the field. Warped or deformed beams will be rejected. Beams to be erected on a radius of 150 feet or less shall be shop curved to the approximate curvature of the installation.

CONNECTIONS AND SPLICES

11.1 All connections or splices shall be formed with oval shoulder button headed bolts to minimize projections on the road side of the guard. Bolts and nuts for Types 1, 2 and 3 beams shall conform to or exceed the requirements of ASTM A 307 and shall be galvanized as specified in ASTM A 153. Bolts and nuts for Type 4 beams shall be of an approved corrosion resistant material and conform to or exceed the requirements of ASTM A 307.

WASHERS AND BACK-UP PLATES

12.1 Washers shall be rectangular as shown in Figure 1. Washers for Types 1, 2 and 3 beams shall be galvanized in accordance with the requirements of ASTM A 153. Washers for Type 4 beams shall be of an approved corrosion resistant steel. Back-up plates if specified for use at non-splice points shall consist of one-foot sections of beams and shall be of the same Class and Type specified for the full length beams.

MARKING

13.1 Each beam element shall be identified by the following:

Name or Brand of Manufacturer
Identification Symbols or Code for Heat Number and Coating Lot
AASHO Specification Number
Class and Type

13.2 Markings shall not be placed at such a location that they will be obscured after erection, or in a manner that the brand will be conspicuous to any traffic. Markings placed on the traffic face of the beam shall be placed in the valley of the center corrugation and shall be die imprinted with letters and numerals not exceeding one-half inch in height.

13.3 Marking material shall be such as to resist obliteration during storage, transportation and erection.

13.4 Markings for end sections and back-up plates may be on durable tags securely attached to each section or bundle except that when specified by the Engineer, each individual piece shall be marked.

BASIS OF ACCEPTANCE

14.1 All material shall be subject to inspection and sampling at the fabricating plant, warehouse or after delivery to the site of construction.

14.2 Acceptance by Sampling

14.2.1 The Engineer may take one piece of guardrail, a back-up plate, and end or buffer section from each 200 pieces in a lot, or from each lot if less than 200 pieces are included therein, for determination of compliance with specification requirements. If one piece fails to meet, two other pieces shall be tested. If either of these pieces fail to conform to the requirements of this specification, the lot of material represented by these

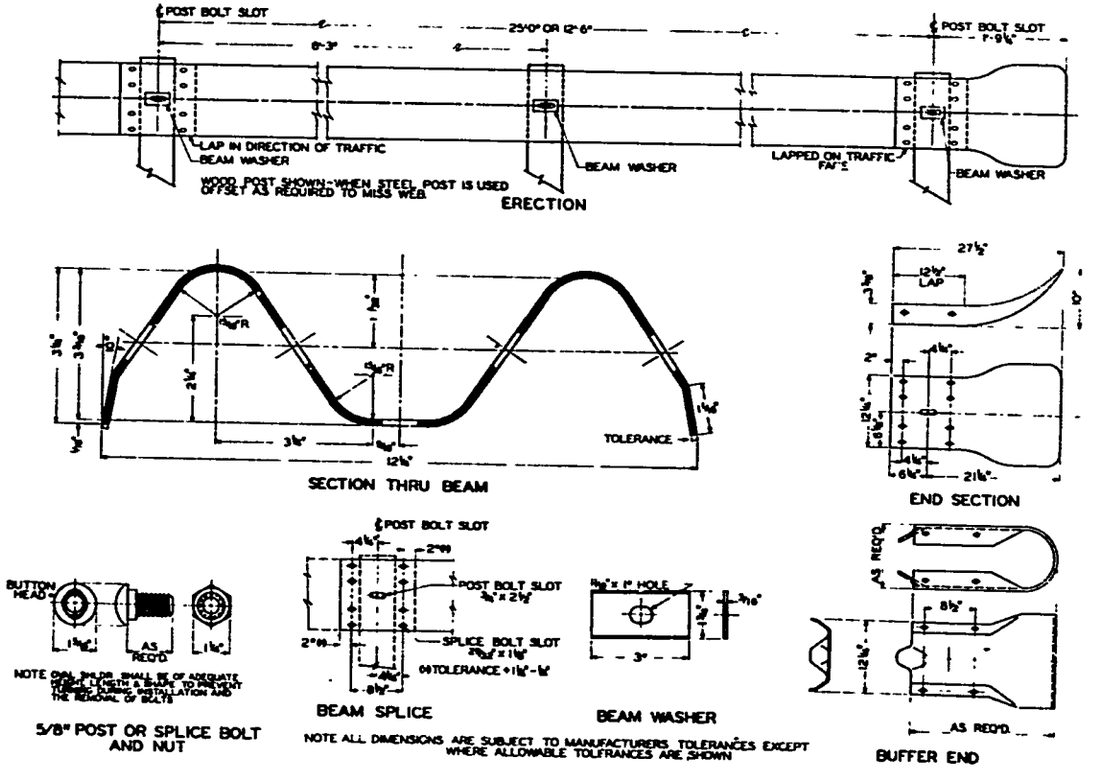
℄ POST BOLT SLOT
25'-0" OR 12'-6"
8'-3"
℄ POST BOLT SLOT
7'-9¼"
LAP IN DIRECTION OF TRAFFIC
BEAM WASHER
WOOD POST SHOWN-WHEN STEEL POST IS USED OFFSET AS REQUIRED TO MISS WEB
BEAM WASHER
LAPPED ON TRAFFIC FACE
BEAM WASHER
ERECTION
TOLERANCE
SECTION THRU BEAM
27½"
12½" LAP
21½"
END SECTION
BUTTON HEAD
AS REQ'D.
NOTE: OVAL SHOULDER SHALL BE OF ADEQUATE LENGTH & SHAPE TO PREVENT TURNING DURING INSTALLATION AND THE REMOVAL OF BOLTS
5/8" POST OR SPLICE BOLT AND NUT
℄ POST BOLT SLOT
POST BOLT SLOT
SPLICE BOLT SLOT
TOLERANCE
BEAM SPLICE
1" HOLE
3"
BEAM WASHER
AS REQ'D.
8½"
AS REQ'D.
BUFFER END
NOTE ALL DIMENSIONS ARE SUBJECT TO MANUFACTURERS TOLERANCES EXCEPT WHERE ALLOWABLE TOLERANCES ARE SHOWN

FIGURE 1

samples shall be rejected. A lot shall be considered that quantity of material offered for inspection at one time which bears the same heat and coating identification.

14.3 Acceptance by Brand Registration and Guarantee

14.3.1 By mutual agreement between the fabricator and Engineer, acceptance may be based upon a Brand Registration and Guarantee filed with the Engineer by the fabricator. For acceptance of a brand, the fabricator shall furnish a Brand Registration and Guarantee meeting the approval of the Engineer and showing the brand name or designation, the manner in which it will appear on the fabricated beams, the typical mechanical properties, chemical composition if specified, the class and type of guardrail, and other specified properties. The fabricator shall also guarantee that as long as material is furnished under that brand and designation, it will conform fully to the requirements of the specifications and shall be replaced without cost to the Engineer when found not in conformity with any of the specified requirements. The Brand Registration and Guarantee shall be sworn to for the fabricator by a person having legal authority to bind the company. Upon approval of a Brand Registration and Guarantee, that brand will be accepted without further certification. If, in subsequent actual field use, there is evidence of misbranding, as determined by random sampling and detection of inadequate tensile strength, yield strength, elongation, improper chemical composition, inadequate or improper coating, deficient thickness or improper fabrication, the material will be rejected and approval for further use withdrawn until subsequently reapproved. Samples for tests of any material offered for use may be taken at any time deemed desirable by the Engineer.

14.3.2 The manufacturer or fabricator shall make such tests and measurements as necessary to insure that the material produced complies with all specification requirements. These tests and measurements shall be so identified by the identification symbols or code used on the beam that the manufacturer can produce specific reports showing these test results. Copies of reports of these tests shall be kept on file and shall be submitted to the Engineer upon request.

14.3.3 The brand shall be removed or obliterated by the manufacturer or fabricator on all material where control tests, as outlined herein, do not show conformance to this specification.

———— o ————

Standard Specification for

Precast Reinforced Concrete Manhole Sections

AASHO DESIGNATION: M 199–70

(ASTM DESIGNATION: C 478–69)

SCOPE

1.1 This specification covers precast reinforced concrete manhole riser sections and appurtenances such as grade rings, tops, and special sections up to 72 in. in diameter.

TYPES

2.1 Precast risers and grade rings shall be of one type, and precast tops shall be of the following three types:

2.1.1 Concentric cone,

2.1.2 Eccentric cone, and

2.1.3 Flat slab top.

BASIS OF ACCEPTANCE

3.1 Unless otherwise designated by the purchaser at the time of, or before, placing

an order, acceptance of precast concrete manhole sections will be on the basis of tests of materials and inspection of the completed product. Acceptability of risers and all types of tops covered by this specification shall be determined by the results of such tests of materials as are required in Sections 5, 6, and 7; by crushing tests on concrete cores or cured concrete cylinders, and by inspection of the finished manhole sections, including amount and placement of reinforcement, to determine its conformance with the design prescribed in this specification and its freedom from defect.

MATERIALS

REINFORCED CONCRETE

4.1 The reinforced concrete shall consist of portland cement, mineral aggregates, and water in which steel has been embedded in such a manner that the steel and the concrete act together.

CEMENT

5.1 Portland cement shall conform to the requirements of the specifications for Portland Cement (AASHO: M 85) or shall be air-entraining portland cement conforming to the requirements of the Specifications for Air-Entraining Portland Cement (AASHO: M 134), or shall be portland blast-furnace slag cement or portland pozzolan cement conforming to the requirements of the Specification for Blended Hydraulic Cements (ASTM Designation: C 595).

STEEL REINFORCEMENT

6.1 Reinforcement shall consist of wire conforming to the Specifications for Cold-Drawn Steel Wire for Concrete Reinforcement (AASHO: M 32), or the Specification for Deformed Steel Wire for Concrete Reinforcement (AASHO: M 225), of wire fabric conforming to the Specifications for Welded Steel Wire Fabric Concrete Reinforcement (AASHO M 55), or the Specification for Welded Deformed Steel Wire Fabric for Concrete Reinforcement (AASHO: M 221), or of bars of Grade 40 steel conforming to the Specifications for Deformed Billet-Steel Bars for Concrete Reinforcement (AASHO M 31), or of bars of Grade 80 steel conforming to the Specification for Carbon Steel Bars Subject to Mechanical Property Requirements (AASHO: M 227).

AGGREGATES

7.1 Aggregates shall conform to the requirements of AASHO: M 6 and M 80 for Concrete Aggregates except that the gradation requirements shall not apply and a loss of 50 percent in the Los Angeles Test shall be permitted.

CONCRETE MIXTURE

8.1 The aggregates shall be so sized and so graded and proportioned, and thoroughly mixed in a batch mixer with such proportions of cement and water, as will produce a homogeneous concrete mixture of such quality that the manhole sections will conform to the test and design requirements of these specifications. Admixtures or blends may be used with the approval of the consumer. In no case, however, shall the proportion of portland cement in the mixture be less than six U.S. standard bags (94 lb) per cubic yard (335 kg/m^3) of concrete.

MINIMUM DESIGNS

9.1 The minimum compressive strength of the concrete in manhole riser and top sections shall be 4000 psi (2.81 kgf/mm^2). The minimum shell thickness shall be one-twelfth of the internal diameter of the riser or largest cone diameter.

9.2 The circumferential reinforcement in the riser and conical top sections shall consist of one line of steel and shall be not less than 0.12 sq in. per lineal ft (254 mm^2/m) for sizes up to and including 54-in. (1372 mm) in diameter, and 0.17 sq in. per lineal ft (359.8 mm^2/m) in larger sizes.

9.3 Flat slab tops shall have a minimum thickness of 6 in. for risers up to 48 in. in diameter and 8 in. for larger diameters. Slabs shall be reinforced with a layer of steel with

a minimum area of 0.12 sq in. per lineal ft (254 mm²/m) in both directions. Openings in flat slabs shall be additionally reinforced with a minimum of the equivalent of 0.20 sq in (129 mm²) of steel at 90 deg. Straight rods used to reinforce openings shall have a minimum length equal to the diameter of the opening plus 2 in. (50.8 mm).

9.4 The circumferential reinforcement in grade rings shall have an equivalent area of not less than 0.07 sq in. per lineal ft (148.2 mm²/m), but not less than 0.024 sq in. (15.48 mm²) in any one grade ring.

ALTERNATE AND SPECIAL DESIGN

10.1 Manufacturers may submit to the purchaser, for approval prior to manufacture, designs other than those described in Section 9. If such approval is obtained, then such manhole sections must meet all of the tests and performance requirements specified by the purchaser in accordance with Section 23.

10.2 If permitted by the purchaser, the manufacturer may request approval of designs of special sections, such as reducers and bases.

PLACING REINFORCEMENT

11.1 One line of circular reinforcement shall be placed in the center third of the wall. The tongue or the groove of the joint shall contain one line of circumferential reinforcement equal in area to that in the barrel of the manhole riser or top. The nominal location of the reinforcement shall be subject, however, to the permissible variations in dimensions given in Section 23.

11.2 In flat slab tops the layers of reinforcement shall be placed near the bottom surface so that the nominal protective cover over the reinforcement shall be 1 in. Flat slab tops manufactured without a joint or other indication of the top or bottom of the slab shall be manufactured with two layers of steel reinforcement, one located near the bottom surface and one near the top surface so that the nominal protective cover over each layer is 1 in. The exposure of the ends of the reinforcement shall not be a cause for rejection.

11.3 Reinforcement of a given total steel area may be composed of two layers if the layers are not separated by more than the thickness of one cross member plus ¼ in. The two layers shall be tied together to form a single rigid cage. All other specification requirements such as laps, welds, and tolerances of placement in the wall of the manhole, risers and tops, etc., shall apply to this method of fabricating a line of reinforcement.

LONGITUDINALS

12.1 Each line of circumferential reinforcement shall be assembled into a cage which shall contain sufficient longitudinal bars or members, extending through the barrel of the manhole risers and conical tops, to maintain the reinforcement rigidly in shape and correct position within the form. The exposure of the ends of stirrups or spacers that have been used to position the cages during placement of the concrete shall not be a cause for rejection.

LAPS, WELDS, AND SPACING

13.1 If the splices are not welded, the reinforcement shall be lapped not less than 20 diameters for deformed bars, and 40 diameters for plain bars and cold-drawn wire. The spacing center to center of adjacent rings of circumferential reinforcement in a cage shall not exceed 6 in. for manhole risers and conical tops. The continuity of the circumferential reinforcing steel shall not be destroyed during the manufacture of the manhole risers and tops.

JOINTS

14.1 The reinforced concrete manhole riser sections, excepting grade rings, shall be formed with male and female ends, so that when the manhole riser and top are assembled they will make a continuous and uniform manhole, compatible with the tolerances given in Section 23. The joints shall be of such design as will permit effective jointing to reduce leakage and infiltration to a satisfactory minimum and to permit placement without appreciable irregularities in the interior wall surface of the manhole.

MANHOLE STEPS AND LADDERS

15.1 Manhole steps that are cast or mortared into the walls of riser or conical top sections shall be aligned in each section so as to form a continuous ladder with rungs equally spaced vertically in the assembled manhole at a maximum design distance of 16 in., consistent with local safety codes.

15.2 The ends of reinforced concrete manhole sections shall be so formed that when the manhole risers and the top are assembled they will make a continuous and uniform manhole, compatible with the tolerances given in Section 23.

LIFT HOLES

16.1 When agreed upon by the purchaser and manufacturer, not more than two holes shall be cast or drilled in the shell of each riser section for the purpose of handling and laying.

PLACEMENT OF CONCRETE

17.1 The transporting and placement of concrete shall be by methods that will prevent the segregation of the concrete materials and the displacement of the reinforcement steel from its proper position in the form.

CURING

18.1 Manhole sections shall be subjected to any one of the methods of curing described in 18.2 to 18.5 or to any other method or combination of methods approved by the purchaser, that will give satisfactory results. The manhole risers and tops shall be cured for a sufficient length of time so that the concrete will develop the specified compressive strength at 28 days or less.

18.2 *Steam Curing.*—Manhole sections shall be placed in a curing chamber, free from outside drafts, and cured in a moist atmosphere maintained by the injection of steam for such time and such temperature as may be needed to enable the manhole risers and tops to meet the strength requirements. The curing chamber shall be so constructed as to allow circulation of steam around the entire manhole riser or top.

18.3 *Water Curing.*—Concrete manhole sections may be water-cured by covering with water-saturated material or by a system of perforated pipes, mechanical sprinklers, porous hose, or by any other approved method that will keep the manhole risers and tops moist during the specified curing period.

18.4 The manufacturer may, at his option, combine the methods described in 18.2 and 18.3 as long as the required concrete compressive strength is attained.

18.5 A sealing membrane conforming to the requirements of the Specification for Liquid Membrane-Forming Compounds for Curing Concrete AASHO: M 148 may be applied and should be left intact until the required strength requirements are met. The concrete at the time of application shall be within 5.6 C (10 F) of the atmospheric temperature. All surfaces shall be kept moist prior to the application of the compounds and shall be damp when the compound is applied.

PHYSICAL TEST REQUIREMENTS

COMPRESSION TESTS

19.1 Compression tests for satisfying the minimum specified concrete strength requirement may be made on either standard rodded concrete cylinders or cylinders compacted and cured in a similar manner to the manhole sections or, at the option of the manufacturer, on cores drilled from the wall of the manhole sections. If cylinders are tested, they shall be tested in accordance with the Method of Test for Compressive Strength of Molded Concrete Cylinders AASHO: T 22. The average compressive strength of all cylinders tested shall be equal to or greater than the specified design strength of the concrete. Not more than 10 per cent of the cylinders tested shall fall below the specified design strength. In no case shall any cylinder tested fall below 3200 psi (22.5 kgf/cm²). If cores are drilled from the wall of the manhole sections and tested, they shall have a diameter not less than 3½ in. (89 mm). The

shall be secured, prepared for testing, and tested as prescribed in the Methods of Obtaining and Testing Drilled Cores and Sawed Beams of Concrete AASHO: T 24. The compressive strength of each core tested shall be equal to or greater than the design strength of the concrete. If a core does not meet the required strength, another core from the same manhole section may be tested. If this core does not meet the required strength, that manhole section shall be rejected. Additional tests shall be made on other manhole sections to determine the acceptability of the lot. When the cores cut from a section of manhole section successfully meet the strength test requirement the core holes shall be plugged and sealed by the manufacturer in a manner such that the manhole section will meet all of the test requirements of this specification. Manhole sections so sealed shall be considered as satisfactory for use.

ABSORPTION TEST REQUIREMENTS OF CONCRETE

20.1 The absorption of a sample from the wall of the manhole section as determined in AASHO T 33, Determining Physical and Chemical Properties of Culvert Pipe, Sewer Pipe, and Drain Tile, shall not exceed 8 per cent of the dry weight. Manhole section shall be considered as conforming to this specification for absorption when not less than 80 per cent of the number of specimens tested, including any retested, conform to the test requirements. When the initial absorption specimen from a manhole section fails to conform to this specification, the absorption test shall be made on another specimen from the same manhole section and the results of the retest shall be substituted for the original test results.

RETESTS

21.1 When not more than 20 per cent of the concrete test specimens fail to pass the requirements of this specification, the manufacturer may cull his stock and may eliminate whatever quantity of manhole sections he desires and must so mark them that they will not be shipped. The required tests shall be made on the balance of the order and the manhole sections shall be accepted if they conform to the test requirements.

NUMBER AND TYPE OF TEST REQUIRED

22.1 A purchaser may require compression test specimens in the amount of 5 per cent of the total order, but not to exceed two cylinders for each day's production.

PERMISSIBLE VARIATIONS IN DIMENSIONS

23.1 The internal diameter of manhole sections shall not vary more than 1 per cent from the nominal diameter. The wall thickness shall be not less than that described in the design by more than 5 per cent or 3/16 in. (4.8 mm), whichever is the greater. A wall thickness greater than that shown in the design shall not be cause for rejection.

23.2 For sections with a 4-in. (102 mm) wall or less, the maximum variation in the position of the reinforcement from that described in Section 11 shall be ± 10 per cent of the wall thickness or ± 1/4 in. (6.4 mm), whichever is the greater. For sections with a wall thickness greater than 4 in., the maximum variation shall be ± 10 per cent of the wall thickness or ± 5/8 in. (15.9 mm) whichever is the lesser. In no case, however, shall the cover over the reinforcement be less than 3/4 in. (19.0 mm).

23.3 Steel areas that are 0.005 sq in. (10.6 mm^2/m) per lineal ft less than that called for by the design will be considered as meeting the required steel area.

23.4 Variations in laying lengths of two opposite sides of manhole sections shall be not more than 5/8 in. (15.9 mm).

23.5 The underrun in length of a section of manhole riser or conical top shall be not more than 1/4 in. per ft of length with a maximum of 1/2 in. (12.7 mm) in any one section.

23.6 The vertical spacing and vertical alignment between adjacent manhole steps and horizontal distance from the inside wall to the center line of a manhole step may vary 1 in. from the design dimensions.

FINISH

24.1 The manhole sections shall be substantially free of fractures, large or deep cracks, and surface roughness. The planes of the ends of the manhole sections shall be perpen-

dicular to their longitudinal axis, within the limits of the variations given in Section 23.

MARKING

25.1 The following information shall be clearly marked on each manhole section:

25.1.1 MH,

25.1.2 Date of manufacture, and

25.1.3 Name or trade-mark of the manufacturer.

25.2 Marking shall be indented into the manhole risers and top sections or shall be painted thereon with waterproof paint.

INSPECTION

26.1 The quality of materials, the process of manufacture, and the finished manhole sections shall be subject to inspection and approval by an inspector employed by the purchaser.

REJECTION

27.1 Manhole sections shall be subject to rejection on account of failure to conform to any of the specification requirements. In addition, individual sections of manhole sections may be rejected because of any of the following:

27.2 Fractures or cracks passing through the shell, except for a single end crack that does not exceed the depth of the joint.

27.3 Defects that indicate imperfect proportioning, mixing, and molding.

27.4 Surface defects indicating honey-combed or open texture.

27.5 Damaged ends, where such damage would prevent making a satisfactory joint.

REPAIRS

28.1 Manhole sections may be repaired, if necessary, because of occasional imperfections in manufacture or accidental injury during handling and will be acceptable if, in the opinion of the purchaser, the repairs are sound and properly finished and cured and the repaired manhole sections conform to the requirements of this specification.

———— o ————

Standard Specification for

Steel Sheet Piling

AASHO DESIGNATION: M 202–70

(ASTM DESIGNATION: A 328–69)

SCOPE

1.1 This specification covers carbon steel [1] sheet piling of structural quality for use in the construction of dock walls, sea walls, cofferdams, excavations, and like applications.

1.2 When the steel is used in welded construction, it is presupposed that welding procedures will be suitable for the materials being welded. All welding shall be performed using a low-hydrogen process.

NOTE: The values stated in U. S. customary units are to be regarded as the standard. The metric equivalents of U. S. customary units given in the standard may be approximate.

GENERAL REQUIREMENTS FOR DELIVERY

2.1 Material furnished under this specification shall conform to the applicable requirements of the current edition of AASHO M 160, General Requirements for Delivery of Rolled Steel Plates, Shapes, Sheet Piling, and Bars for Structural Use.

APPURTENANT MATERIALS

3.1 Unless otherwise provided in the order, the current edition of the specifications of the American Association of State Highway Officials listed in Table 1 shall govern delivery of otherwise unspecified appurtenant materials when included with material purchased under this specification.

PROCESS

4.1 The steel shall be made by the open-hearth, basic-oxygen, or electric-furnace processes.

CHEMICAL COMPOSITION

5.1 When subjected to the ladle and check analyses, respectively, required by the provisions of AASHO M 160, the steel shall conform to the requirements as to chemical composition prescribed in Table 2.

TABLE 1
Appurtenant Material Specifications

Commodity	Specification of Material[a] to be Furnished with Steel Sheet Piling
Plates, bars, structural shapes	AASHO M 183
Rivets	AASHO M 228, Grade 1[b]
Bolts	ASTM A 307, Grade A[c]

[a] These designations refer to the following Specifications:
M 183, Structural Steel,
A 307, Low-Carbon Steel Externally and Internally Threaded Standard Fasteners, and
M 228, Steel Structural Rivets.
[b] AASHO M 228, Grade 2, may be specified if desired.
[c] AASHO M 164, for High-Strength Bolts for Structural Steel Joints Including Suitable Nuts and Plain Hardened Washers, may be specified where required.

[1] See AASHO M 223, for High-Strength Low-Alloy Columbium-Vanadium Steels of Structural Quality

MECHANICAL PROPERTIES

6.1 The material, as represented by the test specimens, shall conform to the requirements as to tensile properties prescribed in Table 3.

6.2 The bend test specimen shall stand being bent cold through 180 deg to an inside diameter of two times the thickness of the specimen without cracking on the outside of the bent portion.

NOTE.—This ratio applies to the bending performance of a test specimen only. This specimen is always taken in the longitudinal direction and usually has some edge preparation. When sheet piles are to be bent in a fabricating operation, more liberal bend radii must be used.

6.3 A minimum tensile strength of 60,000 psi (42.2 kgf/mm²) and a minimum yield point of 36,000 psi (25.3 kgf/mm²) shall be permitted for piling sections used in the fabrication of cold-formed connections.

NUMBER OF TESTS

7.1 Two tension and two bend tests shall be made from each heat, unless the finished material from a heat is less than 50 tons, when one tension and one bend test will be sufficient.

TEST REPORTS

8.1 When test reports are required by the purchase order, the report shall show the results of each test required by 7.1. Number of Tests, except that only one test need be reported when the amount of material from a heat in a shipment is less than 10 tons.

SUPPLEMENTARY REQUIREMENT

The following supplementary requirement shall apply only when specified in the purchase order.

S1. The minimum strength of the interlocked joint required for certain services may be specified for certain sheet piling sections subject to specific agreement between the material purchaser and the manufacturer.

TABLE 2
Chemical Requirements

Element	Composition, per cent	
	Ladle	Check
Phosphorus, max	0.04	0.05
Sulfur, max	0.05	0.063
Copper (when specified), min	0.20	0.18

TABLE 3
Tensile Requirements

Tensile strength, min, psi (kgf/mm²)	70 000 (49.2)
Yield point, min, psi (kgf/mm²)	38 500 (27.1)
Elongation in 8 in. (203.2 mm), min, per cent	17

Standard Specification for

Uncoated Seven-Wire Stress-Relieved Strand for Prestressed Concrete

AASHO DESIGNATION: M 203–70

(ASTM DESIGNATION: A 416–68)

SCOPE

1.1 This specification covers two grades of seven-wire, uncoated, stress-relieved steel strand for use in pretensioned and posttensioned prestressed concrete construction. Grade 250 and Grade 270 have minimum ultimate strengths of 250,000 psi and 270,000 p. (190 and 176 kgf/mm²) respectively, based on the nominal area of the strand.

BASE METAL

2.1 The base metal shall be carbon steel of such quality that when drawn to suitable round wire sizes and fabricated into proper strand sizes and properly stress relieved after stranding, shall have the properties and characteristics prescribed in this specification.

WIRE

3.1 The wire from which the strand is to be fabricated shall have a common dry-drawn finish.

STRAND

4.1 All strand shall be of the seven-wire type having a center wire enclosed tightly by six helically placed outer wires with a uniform pitch of not less than 12 and not more than 16 times the nominal diameter of the strand.

4.2 When the strand is cut without seizings, the wire shall not fly out of position.

JOINTS

5.1 There shall be no strand joints or strand splices in any length of the completed strand unless specifically permitted by the purchaser.

5.2 During the process of manufacture of the individual wires for stranding, welding is permitted only prior to or at the size of the last heat treatment (patenting).

5.3 During fabrication of the strand, butt-welded joints may be made in the individual wires, provided there is not more than one such joint in any 150-ft (45 m) section of the completed strand.

NOTE—When specifically ordered as "Weldless Grade," a product free of welds will be furnished. When this grade is specified, no welds or joints are permitted except as detailed in 5.2

STRESS RELIEVING

6.1 After stranding, all strands shall be subjected to a stress-relieving continuous heat treatment to produce the prescribed mechanical properties. Temper colors, which may result from the stress-relieving operation, are considered normal for the finished appearance of the strand.

SAMPLING

7.1 One specimen for test shall be taken from each 20-ton production lot of finished strand. Test specimens shall be cut from the outside end of reels or either end of coils or

reelless packs. Any specimen found to contain a wire joint should be discarded and a new specimen obtained.

TENSION TEST

8.1 In tension testing the specimens, the ends shall be secured in the tensile machine by the use of fitted, slip-limiting grips or other suitable methods of anchorage.

8.2 If any sample breaking within the grips or the jaws of the testing machine results in values below the specified limits for breaking strength, yield strength, or elongation, the results shall be considered invalid and retesting shall be required.

BREAKING STRENGTH

9.1 The finished stress-relieved strand shall conform to the requirements prescribed in Table 1.

YIELD STRENGTH

10.1 As prescribed in Table 2, the minimum yield strength for all strands, measured by the 1 per cent extension under load method, shall be not less than 85 per cent of the specified minimum breaking strength.

10.2 The extension under load shall be measured by an extensometer calibrated with the smallest division not larger than 0.0001 in. per in. of gage length.

10.3 The initial load indicated in Table 2 shall be applied to the specimen, at which time the extensometer is attached and adjusted to a reading of 0.001 in. per in. of gage

TABLE 1
Breaking Strength Requirements

Nominal Diameter of Strand, in.	Breaking Strength of Strand, min, lb	Nominal Steel Area of Strand, sq in.	Nominal Weight of Strands, lb per 1,000 ft
	Grade 250		
1/4 (0.250)	9 000	0.036	122
5/16 (0.313)	14 500	0.058	197
3/8 (0.375)	20 000	0.080	272
7/16 (0.438)	27 000	0.108	367
1/2 (0.500)	36 000	0.144	490
	Grade 270		
3/8 (0.375)	23 000	0.085	290
7/16 (0.438)	31 000	0.115	390
1/2 (0.500)	41 300	0.153	520

TABLE 2
Yield Strength Requirements

Nominal Diameter of Strand, in.	Initial Load, lb	Minimum Load at 1 per cent Extension, lb
	Grade 250	
1/4 (0.250)	900	7 650
5/16 (0.313)	1,450	12 300
3/8 (0.375)	2,000	17 000
7/16 (0.438)	2,700	23 000
1/2 (0.500)	3,600	30 600
	Grade 270	
3/8 (0.375)	2,300	19 550
7/16 (0.438)	3,100	26 350
1/2 (0.500)	4,130	35 100

length. The load shall then be increased until the extensometer indicates an extension of 1 per cent. The load for this extension shall be recorded and shall meet the requirements prescribed in Table 2.

ELONGATION

11.1 The total elongation, under load, of the strand shall be not less than 3.5 per cent and shall be measured in a gage length of not less than 24 in. The elongation shall be determined by an extensometer which is placed on the test specimen after an initial load has been applied. The initial load is equivalent to 10 per cent of the required minimum breaking strength as prescribed in Table 2. Following an extension of 1.0 per cent, the extensometer may be removed and loading continued to ultimate failure. The elongation value is then determined by the movement between the jaws gripping the material on the new base length of jaw-to-jaw distance to which will be added the value of 1.0 per cent determined by the extensometer.

11.2 Specimens that break outside of the extensometer or in the jaws and yet meet the minimum specified values, are considered as meeting the elongation requirements of these specifications.

11.3 If the minimum elongation requirement is met prior to initial rupture, it is not necessary to determine the final elongation value.

SIZE OF STRAND

12.1 The size of the finished strand shall be expressed as the nominal diameter of the strand in fractions of an inch.

PERMISSIBLE VARIATIONS IN SIZE

13.1 All Grade 250 strands shall conform to a size tolerance of ± 0.016 in. from the nominal diameter measured across the crowns of the wires. All Grade 270 strands shall conform to a size tolerance of + 0.026 in. − 0.006 in. from the nominal diameter measured across the crowns of the wire.

13.2 The diameter of the center wire of any strand must be larger than the diameter of any outer wire in accordance with Table 3.

13.3 Variation in cross-sectional area and variation in unit stress resulting therefrom shall not be cause for rejection provided the diameter differences of the individual wires and the diameters of the strand are within the tolerances specified.

WORKMANSHIP AND FINISH

14.1 The finished strand shall be uniform in diameter and shall be free from imperfections not consistent with good commercial stranding practice.

14.2 The strand shall not be oiled or greased. Slight rusting, provided it is not sufficient to cause pits visible to the naked eye, shall not be cause for rejection.

PACKING AND MARKING

15.1 The strand shall be furnished on reels or in compact coils having a minimum core diameter of 24 in., unless otherwise specified by the purchaser. Lengths on reels, in coils, or in reelless packs shall be as agreed upon at the time of purchase. The strand shall be well protected against mechanical injury in shipping as agreed upon at the time of purchase. Each reel or coil shall have a strong tag securely fastened to it showing the length, size, AASHO M 203 or ASTM A 416 and the name or mark of the manufacturer and the heat number of the production lot number.

INSPECTION

16.1 The purchaser shall state at the time of order whether outside inspection is required or waived. If outside inspection is required, the manufacturer shall afford the

inspector representing the purchaser all reasonable facilities, without charge, to satisfy him that the material is being furnished in accordance with these specifications. All tests and inspections shall be made at the place of manufacture prior to shipment, unless otherwise agreed upon at the time of purchase, and shall be so conducted as not to interfere unnecessarily with the operation of the works. If outside inspection is waived, a manufacturer's certification that the material has been tested in accordance with and meets the requirements of these specifications shall be the basis of acceptance of the material.

REJECTION

17.1 In case there is a reasonable doubt in the first trial as to the failure of the strand to meet any requirement of these specifications, two additional tests shall be made on samples of strand from the same coil or reel, and if failure occurs in either of these tests, the strand shall be rejected.

TABLE 3
Diameter Relation Between Center and Outer Wires

Nominal Diameter of Strand, in.	Minimum Difference Between Center Wire Diameter and Diameter of any Outer Wire, in.
Grade 250	
1/4 (0.250)	0.001
5/16 (0.313)	0.0015
3/8 (0.375)	0.002
7/16 (0.438)	0.0025
1/2 (0.500)	0.003
Grade 270	
3/8 (0.375)	0.002
7/16 (0.438)	0.0025
1/2 (0.500)	0.003

—o—

Standard Specification for

Uncoated Stress-Relieved Wire for Prestressed Concrete

AASHO DESIGNATION: M 204–70

(ASTM DESIGNATION: A 421–65)

SCOPE

1.1 This specification covers two types of uncoated stress-relieved round high-carbon steel wire commonly used in prestressed linear concrete construction, as follows:

Type BA wire is used for applications in which cold-end deformation is used for anchoring purposes (Button Anchorage).

Type WA wire is used for applications in which the ends are anchored by wedges, and no cold-end deformation of the wire is involved (Wedge Anchorage).

PROCESS

2.1 The steel shall be made by the basic-oxygen, open hearth, or electric-furnace process.

2.2 The wire shall be cold drawn to size and suitably stress relieved after cold drawing by a continuous strand heat treatment to produce the prescribed mechanical properties.

2.3 There shall be no welds or joints in the finished wire. Any welds or joints made during manufacture to promote continuity of operations shall be removed.

DISCARD

3.1 A sufficient discard shall be made from each ingot to ensure freedom from injurious piping and undue segregation.

CHEMICAL COMPOSITION

4.1 The ladle analysis of the steel shall conform to the following ranges:

Carbon, per cent	0.72 to 0.93
Manganese, per cent	0.40 to 1.10
Phosphorus, max, per cent	0.040
Sulfur, max, per cent	0.050
Silicon, per cent	0.10 to 0.35

4.2 Variations in manufacturing processes and equipment among wire manufacturers necessitate the individual selection of an appropriate chemical composition, within the above ranges, at the discretion of the manufacturer.

4.3 When requested, an analysis of each heat of steel showing the percentages of the elements specified in 4.1 shall be furnished by the manufacturer.

CHECK ANALYSIS TOLERANCES

5.1 An analysis may be made by the purchaser from finished wire representing each heat of steel. Samples for analysis shall be obtained by milling the wire in such a manner as to obtain a sample representative of the entire cross-section. Prior to milling, the surface shall be cleaned to remove all foreign matter. All such individual determinations shall not vary from the limits shown in 4.1 by more than the amounts prescribed in Table 1.

TENSILE STRENGTH

6.1 The tensile strength of type BA wire and type WA wire shall conform to the requirements prescribed in Table 2.

TABLE 1
Permissible Variations for Check Analysis

Element	Permissible Variation Over Maximum Limit or Under Minimum Limit, per cent
Carbon	0.04
Manganese	0.06
Phosphorus	0.008
Sulfur	0.008
Silicon	0.02

TABLE 2
Tensile Strength Requirements

Nominal Diameter, in.	Tensile Strength, min, psi	
	Type BA	Type WA
0.192	[a]	250 000
0.196	240 000	250 000
0.250	240 000	240 000
0.276	[a]	235 000

[a] These sizes are not commonly furnished in type BA wire.

TABLE 3
Yield Strength Requirements

Nominal Diameter, in.	Initial Stress, psi	Minimum Stress at 1 per cent Extension, psi	
		Type BA	Type WA
0.192	29 000	[a]	200 000
0.196	29 000	192 000	200 000
0.250	29 000	192 000	192 000
0.276	29 000	[a]	188 000

[a] These sizes are not commonly furnished in type BA wire.

YIELD STRENGTH

7.1 The minimum yield strength for all wire, measured by the 1.0 per cent extension under load method, shall not be less than 80 per cent of the specified minimum breaking strength.

7.2 The extension under load shall be measured by an extensometer calibrated with the smallest division not larger than 0.0001 in. per in. of gage length.

7.3 The initial load corresponding to the initial stress prescribed in Table 3 shall be applied to the specimen, at which time the extensometer is attached and adjusted to a reading of 0.001 in. per in. of gage length. The load shall then be increased until the extensometer indicates an extension of 1 per cent. The load for this extension shall be recorded. The stress corresponding to this load shall meet the requirements for stress at 1 per cent extension prescribed in Table 3.

ELONGATION

8.1 The total elongation under load of all wire shall not be less than 4.0 per cent when measured in a gage length of 10 in. The elongation shall be determined by an extensometer which is placed on the test specimen after a load corresponding to the initial stress prescribed in Table 3 is applied. If the fracture takes place outside of the gage length, the elongation value obtained may not be representative of the material. If the elongation so measured meets the minimum requirements specified, no further testing is indicated; but if the elongation is less than the minimum requirements, the test shall be discarded and a retest made.

PERMISSIBLE VARIATIONS IN DIMENSIONS

9.1 The diameter of the wire shall not vary from the nominal diameter specified by more than ± 0.002 in.

9.2 The wire shall not be out-of-round by more than 0.002 in.

CAST

10.1 A wire sample of sufficient length, when laid free on a substantially flat surface, shall form an arc of a circle not less than 12 ft in diameter.

BUTTON ANCHORAGE

11.1 Type BA wire shall be of suitable quality to permit cold forming of buttons for anchorage. Splitting shall not be considered a cause for rejection if the button anchorage is capable of developing the full strength of the wire.

NUMBER OF TESTS

12.1 Unless otherwise agreed upon between the manufacturer and the purchaser, one test specimen shall be taken from each 10 coils or less in a lot [1] and tested to determine compliance with Sections 6, 7, 8, 9, and 10.

[1] The term "lot" means all the coils of wire of the same nominal wire size contained in an individual shipping release or shipping order.

WORKMANSHIP AND FINISH

13.1 The wire shall be free from kinks.

13.2 The wire shall be furnished in firmly tied coils, having a minimum inside diameter of 48 in. Each coil shall be of one continuous length.

13.3 The wire shall not be oiled or greased. Slight rusting, provided it is not sufficient to cause pits visible to the naked eye, shall not be cause for rejection.

13.4 Temper colors which may result from the stress-relieving operation are considered normal as regards the finished appearance of the wire.

MARKING

14.1 The size of the wire, AASHO specification number, heat number, and name or mark of the manufacturer shall be marked on a tag securely attached to each bundle of wire.

INSPECTION

15.1 The purchaser shall state at the time of order whether outside inspection is required or waived. If outside inspection is required, the manufacturer shall afford the inspector representing the purchaser all reasonable facilities, without charge, to satisfy him that the material is being furnished in accordance with these specifications. All tests and inspections shall be made at the place of manufacture prior to shipment, unless otherwise agreed upon at the time of purchase, and shall be so conducted as not to interfere unnecessarily with the operation of the works. If outside inspection is waived, a manufacturer's certification that the material has been tested in accordance with and meets the requirements of this specification shall be the basis of acceptance of the material.

REJECTION

16.1 Unless otherwise specified, any rejection based on tests made in accordance with these specifications shall be reported to the manufacturer within a reasonable length of time.

———— o ————

Standard Specification for

Cationic Emulsion Asphalt

AASHO DESIGNATION: M 208–70

ASTM DESIGNATION: D 2397–69

SCOPE

1.1 This specification covers six grades of cationic emulsified asphalt for use in pavement construction in the manner designated.

NOTE: See AASHO M 140-70 for anionic emulsions.

REQUIREMENTS

2.1 The emulsified asphalt shall be homogeneous. Within 30 days after delivery, and provided separation has not been caused by freezing the emulsified asphalt shall be homogeneous after thorough mixing.

2.2 Emulsified asphalt shall conform to the requirements prescribed in Table 1.

SAMPLING

3.1 Samples of emulsified asphalt shall be taken in accordance with AASHO T 40, Sampling Bituminous Materials.

3.2 Samples shall be stored in clean airtight sealed containers at a temperature of not less than 40 F (4.5 C) until tested.

METHODS OF TEST

4.1 The properties of the emulsified asphalts given in Table 1 shall be determined in accordance with AASHO T 59, Testing Emulsified Asphalt, with the following exceptions:

4.1.1 *Demulsibility.*—Use 35 ml of 0.8 percent solution of sodium dioctyl sulfosuccinate in place of 35 ml of calcium chloride solution (0.02 N).

4.1.2 *Sieve Test.*—Use distilled water in all wetting and washing operations in place of sodium oleate solution (2 per cent).

TABLE 1
Requirements for Cationic Emulsified Asphalt

Type	Rapid Setting				Medium Setting				Slow Setting			
Grade	CRS-1		CRS-2		CMS-2		CMS-2h		CSS-1		CSS-1h	
	Min.	Max.	Min	Max.	Min.	Max.	Min.	Max.	Min.	Max.	Min.	Max.
Tests on emulsions:												
Visc., Saybolt Furol at 77 F (25 C) sec.									20	100	20	100
Visc., Saybolt Furol at 122 F (50 C) sec.	20	100	100	400	50	450	50	450				
Settlement, (a) 5 days, %		5		5		5		5		5		5
Storage Stability Test, (b) 1 day, %		1		1		1		1		1		1
Demulsibility, (c) 35 ml 0.8% sodium dioctyl sulfosuccinate, %	40		40									
Coating ability and water resistance:												
Coating, dry aggregate					Good		Good					
Coating, after spraying					Fair		Fair					
Coating, wet aggregate					Fair		Fair					
Coating, after spraying					Fair		Fair					
Particle charge test	Positive		Positive		Positive		Positive		Positive		Positive	
Sieve Test, %		0.10		0.10		0.10		0.10		0.10		0.10
Cement mixing test, %										2.0		2.0
Distillation												
Oil distillate, by volume of emulsion, %		3		3		12		12				
Residue, %	60		65		65		65		57		57	
Tests on residue from distillation test.												
Penetration, 77 F (25 C), 100 g, 5 sec.	100	250	100	250	100	250	40	90	100	250	40	90
Ductility, 77 F (25 C), 5 cm per min., cm.	40		40		40		40		40		40	
Solubility in trichloroethylene, %	97.5		97.5		97.5		97.5		97.5		97.5	
Suggested uses	Surface treatment, penetration macadam and tack coat		Surface treatment, penetration macadam		Plant or road mixture with coarse aggregate substantially all of which is retained on a No. 8 sieve and practically none of which passes a No. 200 (0.075 mm) sieve.				Plant or road mixture with graded and fine aggregates, a substantial quantity of which passes a No. 8 sieve and a portion of which may pass a No. 200 (0.075 mm) sieve, slurry seal treatment.			

(a) The test requirement for settlement may be waived when the emulsified asphalt is used in less than 5 days time, or the purchaser may require that the settlement test be run from the time the sample is received until it is used, if the elapsed time is less than 5 days.
(b) The 24 hour (1 day) storage stability test may be used instead of the 5 day settlement test.
(c) The demulsibility test shall be made within 30 days from date of shipment.

Standard Specification for

Lime for Soil Stabilization

AASHO DESIGNATION: M 216–68

SCOPE

1.1 This specification covers two types, including 3 grades each, of lime to be used for soil stabilization as follows:

1.1.1 Type I. High calcium hydrated lime containing a maximum magnesium content, calculated as magnesium oxide, of 4 percent by weight. Compliance with chemical composition requirements shall be determined by use of AASHO T 219.

1.1.2 Type II. Magnesium or dolomitic lime containing magnesium content, calculated as magnesium oxide, greater than 4 but no more than 36 percent by weight. Compliance with chemical composition requirements shall be determined by use of ASTM C25–58 (Chemical Analysis of Limestone, Quicklime and Hydrated Lime).

NOTE—No attempt is made to present requirements for waste lime, commercial lime slurry, etc. Specification requirements for these materials could be better determined on a local basis.

BASIS OF PURCHASE

2.1 The purchaser and contractor should agree upon the grade desired before construction begins. When no grade is agreed upon the requirements of Grade A shall govern. When Grades B and C are used, plan quantities for Grade A shall be increased, without additional cost to the purchaser, as follows:

Type	Grade B	Grade C
I	6%	20%
II	2%	5%

CHEMICAL LIMITS

3.1 Type I lime when sampled and tested by procedures prescribed herein shall conform to the following requirements:

	Grade A	Grade B	Grade C
Min. Hydrate alkalinity, percent by weight $Ca(OH)_2$	90	85	75
Max. Unhydrated lime content, percent by weight CaO	7	8	9
Max. "Free Water" content, percent by weight H_2O	3	3	2

3.2 Type II lime when tested in accordance with ASTM Designation C 25 shall conform to the following requirements:

	Grade A	Grade B	Grade C
Calcium and magnesium oxide content of ignition residue, minimum percent*	98	96	94
Carbon dioxide (as received basis) maximum percent	3	4	8
Unhydrated calcium oxide (as received basis) maximum percent	7	8	9
"Free Water" content, maximum percent	3	3	2

* Ignition to constant weight shall be performed utilizing an electric muffle furnace operating at 1000-1100°C (1800–2000 F.).

PHYSICAL REQUIREMENTS

4.1 Type I and Type II lime shall conform to the following particle size requirements when tested according to AASHO T 192 (modified):

	Grade A	Grade B	Grade C
Max. residue retained on a No. 30 (0.600 mm) sieve, percent by weight	2	3	4
Max. residue retained on a No. 200 (0.075 mm) sieve, percent by weight	12	14	18

PACKAGING AND MARKING

5.1 When the lime is delivered in bags, the name and brand of the manufacturer and type shall be plainly identified thereon. A bag shall contain a nominal weight of 50 pounds (25 kg) and all bags shall be in good condition at time of inspection. When lime is delivered in bulk, information regarding type and manufacturer shall be contained in the invoice accompanying the shipment.

INSPECTION

6.1 Every facility shall be provided the purchaser for careful sampling and inspection of the lime at either the plant or at the site of the work as may be specified by the purchaser.

REJECTION

7.1 The lime shall be rejected if it fails to meet any of the requirements of these specifications.

7.2 Lime remaining in storage long enough prior to being used so as to be difficult to handle or will not meet requirements of the specification when resampled and tested, or both, may be rejected.

7.3 In the case of bag lime, bags varying more than 5 percent from the specified weight may be rejected. If the average weight of bags in any shipment as shown by weighing 50 bags taken at random is less than that specified, the entire shipment may be rejected.

METHODS OF SAMPLING AND TESTING

8.1 The sampling and testing of hydrated lime shall be in accordance with the following standard methods of AASHO or ASTM:

Sampling—AASHO T 218
Chemical Analysis for Type I lime—AASHO T 219
Chemical Analysis for Type II lime—ASTM C 25 [a]
Particle Size Analysis—AASHO T 219

[a] Except that Section 2, "Samples for Analysis" is excluded.

Standard Specification for

Aluminum Alloy Structural Plate for Pipe, Pipe-Arches and Arches

AASHO DESIGNATION: M 219-66

SCOPE

1.1 This specification covers aluminum alloy plates and fasteners intended for use in the construction of structural plate pipe, pipe-arches and arches. The plates shall consist

of aluminum alloy and shall be furnished in standard sizes, to permit assembly in uniform increments as shown on the plans for the structure.

BASE METAL

2.1 The plates shall be fabricated from aluminum alloy 5052-H141. The chemical composition of the plates shall conform to ASTM B209 alloy 5052, shown in Table 1. The mechanical properties of the plates as given in Table 2 shall be met.

TABLE 1

Chemical Composition Limits of Aluminum Structural Plate Materials

Aluminum Alloy	Purpose	Si	Fe	Cu	Mn	Mg	Cr	Zn	Others	
									Each	Total
5052-H141....	Plates	(0.45 Si + Fe)		.10	.10	2.2-2.8	.15-.35	.10	.05	.15

TABLE 2

Mechanical Properties of Alloy 5052-H141

Thickness (inches)	Tensile Strength (psi) Minimum	Elongation in 2 in. minimum, percent
0.090 to 0.175.....	35500	6
0.175 thru 0.250.....	34000	8

TABLE 3

Nominal Thicknesses, Thickness Tolerances, and Theoretical Weight for Flat Aluminum Alloy Sheet

Nominal Thickness inches	Theoretical Weight of Flat Sheet lb/sq. ft.	Permissible Variation in thickness inches
0.090	1.26	0.012
0.100	1.39	0.014
0.125	1.74	0.014
0.150	2.09	0.024
0.175	2.44	0.030
0.200	2.79	0.030
0.225	3.13	0.032
0.250	3.48	0.036

CORRUGATIONS

3.1 The corrugations shall have a pitch of 9 inches plus or minus 3/8 inch and a depth of 2½ inches plus or minus ⅛ inch. The inside crown radius of the corrugations shall be not less than 2 inches.

PLATE THICKNESS DETERMINATION AND TOLERANCE

4.1 The nominal thickness and thickness tolerance of the plates shall be as given in Table 3. The theoretical weight per square foot of flat sheet is given in Table 3.

SAMPLING (when verification of chemical analysis is required)

5.1 For testing for chemical analysis a sample shall be provided for each 100 plates of a shipment or fraction thereof. The sample may be obtained from a piece approximately 3 inches square cut from a corner of a plate. The coupon shall be of the same nominal thickness and base metal as the plate to which it is attached.

SHEET MANUFACTURER'S CERTIFIED ANALYSIS

6.1 The manufacturer of the base metal shall file with the Engineer a certificate setting forth the name or brand of metal to be furnished, a typical analysis, and a

statement that the material conforms to the specified chemical composition limits. The certificate shall be sworn to for the manufacturer by a person having legal authority to bind the company.

SHEET MANUFACTURER'S GUARANTEE

7.1 The manufacturer of the sheets shall submit with the certified analysis a guarantee providing that all metal furnished shall conform to the specification requirements, shall bear a suitable identification brand or mark, and shall be replaced without cost to the purchaser when not in conformity with the specified analysis or thickness; the cost to be limited to the replacement of structural plate material only. The guarantee shall be so worded as to remain in effect so long as the manufacturer continues to furnish material

IDENTIFICATION

8.1 No plates will be accepted unless the metal is identified by a stamp on each plate showing

Name of base metal manufacturer.

Name of brand and kind of base metal or alloy designation.

Manufacturer's standard thickness

Manufacturer's date of processing by a six (6) digit number indicating in order the year, month, and day of month.

The identification stamps shall be so placed that when the pipe or arch is erected the identification will appear on the inside of the structure.

BOLTS AND NUTS FOR CONNECTING PLATES

9.1 Bolts for connecting plates shall be not less than ¾ inch in diameter and shall be hot-dip galvanized. The threads shall be American Standard Coarse Thread Series, Class 2 free fit Bolt and nut materials shall conform to the requirements of the current issue of AASHO M 164. The bolts may be sampled and tested before erection is commenced, or the bolts may be accepted on certification by the manufacturer.

9.2 Bolt heads and nuts shall be shaped to provide adequate bearing, or standard type bolts and nuts with special washers shall be used

FIELD INSPECTION AND ACCEPTANCE OF PLATES

10.1 The field inspection shall be made by the Engineer, who shall be furnished by the manufacturer an itemized statement of the number and length of the plates in each shipment. Each plate included in a shipment shall meet fully the requirements of these specifications. If 25 percent of the plates in any shipment fail to meet the requirements, the entire shipment may be rejected.

METHODS OF TESTING

11.1 Unless otherwise provided chemical analysis, when required, shall be in accordance with ASTM E 34 except that suitable spectrographic methods likewise may be employed.

———— o ————

Standard Specification for

Welded Deformed Steel Wire Fabric for Concrete Reinforcement

AASHO DESIGNATION: M 221–68
(ASTM DESIGNATION: A 497–69)

SCOPE

1.1 This specification covers welded wire fabric made from cold-worked, deformed wire, or a combination of deformed and nondeformed wires, to be used for the reinforcement of concrete.

DESCRIPTION OF TERM

2.1 *Welded Wire Fabric.*—The term "welded wire fabric" as used in this specification designates a material composed of steel wires, fabricated into sheet formed by the process of electric welding. The finished material shall consist essentially of a series of longitudinal and transverse wires arranged substantially at right angles to each other and welded together at all points of intersection.

GRADE OF WIRE

3.1 The wire used in the manufacture of welded wire fabric shall conform to the Specification for Deformed Steel Wire for Concrete Reinforcement (AASHO M 225), either solely or in combination with the Specifications for Cold-Drawn Steel Wire for Concrete Reinforcement (AASHO M 32).

FABRICATION

4.1 The wires shall be assembled by automatic machines or by other suitable mechanical means which will assure accurate spacing and alignment of all members of the finished fabric.

4.2 Longitudinal and transverse members shall be securely connected at every intersection by a process of electrical-resistance welding which employs the principle of fusion combined with pressure.

4.3 Wire of proper grade and quality when fabricated in the manner required in this specification shall result in a strong, serviceable, mesh-type product having substantially square or rectangular openings. It shall be fabricated and finished in a workmanlike manner, shall be free from injurious defects, and shall conform to this specification.

MECHANICAL PROPERTIES

5.1 All wire of the finished fabric shall meet the minimum requirements for tensile properties and shall also withstand the bend test as prescribed for the wire before fabrication in AASHO M 225 and, where applicable, AASHO M 32.

5.2 In order to assure adequate weld shear strength between longitudinal and transverse wires, weld shear tests as described in 6.2 shall be made. The minimum average shear value in pounds shall be not less than 20,000 multiplied by the area of the larger wire in square inches where the area of the smaller wire is 35 per cent or more of the area of the larger wire, and provided that the smaller wire is not smaller than D-4.

5.3 Fabric having a relationship of larger and smaller wires other than that covered in 5.2 shall meet an average weld shear strength requirement of not less than 800 lb, provided that the smaller wire is not smaller than D-4.

TENSION TESTS AND WELD SHEAR TESTS

6.1 Tests for determination of conformance to the requirements of 5.1 may be made on the welded wire fabric after fabrication either across or between the welds. Not less than 50 per cent of the specimens shall be tested across a weld.

6.2 Weld shear tests for determination of conformance to the requirements of Section 5.2 shall be conducted using a weld tester as described in Section 9. Four welds selected at random from a specimen representing the entire width of the fabric shall be tested for weld shear strength. The lot shall be deemed to conform to the requirements for weld shear strength if the average of the four tests complies with the values stipulated in 5.2. If this average fails to meet the prescribed minimum value, all the welds across the specimen shall then be tested. The fabric will be acceptable if the average of all weld shear test values across the specimen meets the prescribed minimum value.

BEND TESTS

7.1 The bend test shall be made on a specimen between the welds.

TEST SPECIMENS

8.1 Test specimens for testing tensile properties shall be obtained by cutting from the finished fabric units of suitable size to enable proper performance of the intended tests.

8.2 Specimens used for testing tensile properties across a weld shall have the welded joint located approximately at the center of the wire being tested, and the cross wire forming the welded joint shall extend approximately 1 in. (25 mm) beyond each side of the welded joint.

8.3 Test specimens for determining weld shear properties shall be obtained by cutting from the finished fabric a section, including one transverse wire, across the entire width of the sheet or roll. From this specimen four welds shall be selected at random for testing. The transverse wire of each test specimen shall extend approximately 1 in. (25 mm) on each side of the longitudinal wire. The longitudinal wire of each test specimen shall be of such length below the transverse wire so as to be adequately engaged by the grips of the testing machine and of such length above the transverse wire that its end shall be above the center line of the upper bearing of the testing device.

WELD SHEAR TEST APPARATUS AND METHODS

9.1 As the welds in welded wire fabric contribute to the bonding and anchorage value of the wires in concrete it is imperative that the weld acceptance tests be made in a fixture which will stress the weld in a manner similar to which it is stressed in concrete.

9.1.1 In order to accomplish this the longitudinal wire in the tester must be stressed in an axis close to its center line. Also the transverse wire must be held closely to the longitudinal wire, and in the same relative position, so as to prevent rotation of the transverse wire.

9.2 Figure 1 shows the complete details of a testing fixture together with two anvils which make it possible to test welds for wires up to ⅝ in. (15.9 mm) in diameter. This tester can be used in most tensile testing machines and should be hung in a ball and socket arrangement at the center of the testing machine. This, or a similarly effective fixture designed on the same principle is acceptable.

9.3 Test specimens should be inserted through the notch in the anvil using the smallest notch available in which the longitudinal wire will fit loosely. The longitudinal wire will be in contact with the surface of the free rotating ball bearing rollers while the transverse wire will be supported by the anvil on each side of the slot. The bottom jaws of the testing machine will grip the lower end of the longitudinal wire and the load applied at a rate of stressing not to exceed 100,000 psi (70.3 kgf/mm²) per minute.

NUMBER OF TESTS

10.1 One test for conformance with the provisions of 5.1 shall be made for each 75,000 sq ft (7000 m²) of fabric, or remaining fraction thereof within a lot.

10.2 One specimen for each 300,000 sq ft (28,000 m²) of fabric, or remaining fraction thereof within a lot and as defined in 8.3, shall be tested for conformance to the requirements of 5.2.

10.3 For sampling and test purposes, a lot, at the producer's option, shall consist of either:

10.3.1 Any quantity of one style fabricated on a single machine without change over to another style of fabric, or

10.3.2 A quantity of one style of finished fabric not exceeding 300,000 sq ft (28,000 m²).

SIZES, SPACING, DEFORMATIONS, AND DIMENSIONS

11.1 Sizes, spacing, presence of deformations, arrangement of wires, and dimensions of units in flat sheet form or rolls shall conform to the requirements specified by the purchaser.

WIDTH OF FABRIC

12.1 The width of the fabric shall be considered to be the center-to-center distance between outside longitudinal wires, unless otherwise specified.

12.2 Transverse wires shall not project beyond the centerline of each longitudinal edge wire more than a distance of 1 in. (25.4 mm) unless otherwise specified.

VARIATIONS IN WIRE DIAMETER AND WEIGHT

13.1 The permissible variation in weight of any deformed wire in the fabric or the permissible variation in diameter of any nondeformed wire shall conform to the tolerances prescribed in the appropriate wire specification before fabrication (3.1). Such measurements shall be made between the welds.

SPACINGS

14.1 The average spacing of wires shall be such that the total number of wires contained in a sheet or roll is equal to, or greater than, that determined by the specific spacing, but the center-to-center distance between individual members may vary not more than ¼ in. (6.4 mm) from the specified spacing It is understood that sheets of fabric of the same specified length may not always contain an identical number of transverse wires and, therefore, may have various lengths of longitudinal overhang.

OVER-ALL DIMENSIONS

15.1 The over-all length of flat sheets, measured on any wire, may vary ± 1 in. (25.4 mm) or 1 per cent, whichever is greater.

15.2 In case the width of flat sheets or rolls is specified as the over-all width (tip-to-tip length of cross wires), the width shall be not more than + 1 in. (25.4 mm) of the specified width.

ROLLS OR SHEETS

16.1 Welded wire fabric may be furnished either in flat sheets or in rolls as specified by the purchaser.

BUNDLING

17.1 When fabric is furnished in flat sheets, it shall be assembled in bundles of convenient size containing not more than 150 sheets securely fastened together

17.2 When fabric is furnished in rolls, each roll shall be secured so as to prevent unwinding during shipping and handling.

MARKING

18.1 Each bundle of flat sheets and each roll shall have attached thereto a suitable tag bearing the name of the manufacturer, a description of the material, and such other information as may be specified by the purchaser

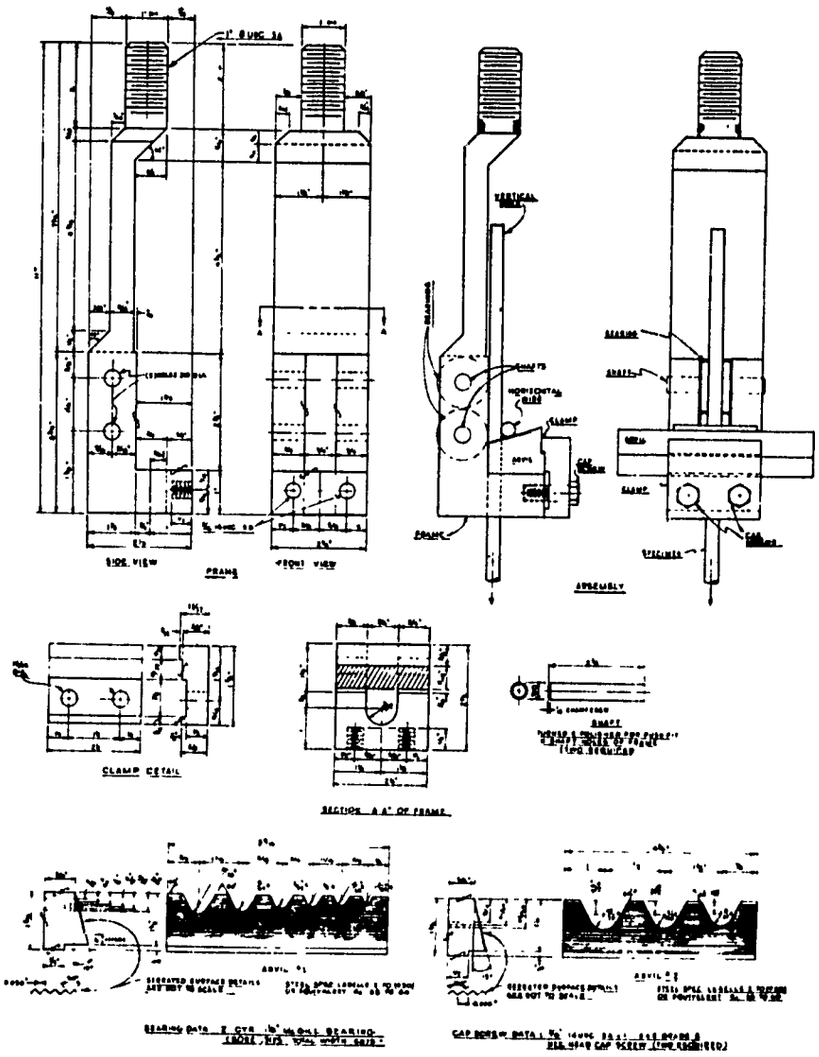

Fig. 1 Welded Wire Fabric Weld Tester

INSPECTION

19.1 The inspector representing the purchaser shall have free entry at all times while work on the contract of the purchaser is being performed to all parts of the manufacturer's works that concern the manufacture of the material ordered. The manufacturer shall afford the inspector, without charge, all reasonable facilities to satisfy him that the material is being furnished in accordance with this specification.

19.2 Except for yield strength, all tests and inspection shall be made at the place of manufacture prior to shipment, unless otherwise specified. Such tests shall be so conducted as not to interfere unnecessarily with the operation of the works.

19.3 If the purchaser considers it desirable to determine compliance with the yield strength requirements of AASHO M 225 or M 32, he may have yield strength tests made in a recognized laboratory, or his representative may make the test at the mill if such tests do not interfere unnecessarily with the mill operations.

REJECTION AND RETESTS

20.1 Material which does not meet the requirements of this specification may be rejected. Unless otherwise specified, any rejection shall be reported to the manufacturer within five days from the time of selection of test specimens.

20.2 In case a specimen fails to meet the tension or bend test, the material shall not be rejected until two additional specimens taken from other wires in the same sheet or roll have been tested. The material shall be considered as meeting this specification in respect to any prescribed tensile property provided the tested average for the three specimens, including the specimen originally tested, is at least equal to the required minimum for the particular property in question, and further provided that none of the three specimens develops less than 80 per cent of the required minimum for the tensile property in question. The material shall be considered as meeting this specification in respect to bend test requirements provided both additional specimens satisfactorily pass the prescribed bend test.

20.3 Any material which shows injurious defects subsequent to its acceptance at the manufacturer's works may be rejected and the manufacturer shall be promptly notified.

20.4 Welded joints shall withstand normal shipping and handling without being broken, but the presence of broken welds, regardless of cause, shall not constitute cause for rejection unless the number of broken welds per sheet exceeds 1 per cent of the total number of joints in a sheet, or if the material is furnished in rolls, 1 per cent of the total number of joints in 150 sq ft (13.9 m^2) of fabric and, furthermore, provided not more than one-half the permissible maximum number of broken welds are located on any one wire

20.5 In case of rejection by reason of failure to meet the weld shear requirements, four additional specimens shall be taken from four different sheets or rolls and tested in accordance with 6.2. If the average of all the weld shear tests does not meet the requirement, the lot shall be rejected.

20.6 In case rejection is justified by reason of failure to meet the requirements for dimensions, the amount of material rejected shall be limited to those individual sheets or rolls which fail to meet the requirements of this specification. If, however, the total number of sheets or rolls thus rejected exceeds 25 per cent of the total number in the shipment, the entire shipment may be rejected.

REHEARING

21.1 Rejected materials shall be preserved for a period of at least two weeks from the date of inspection, during which time the manufacturer may make claim for a rehearing and retesting.

———— o ————

Standard Specification for

High-Strength Low-Alloy Columbium-Vanadium Steels of Structural Quality

AASHO DESIGNATION: M 223–68[1]

SCOPE

1.1 This specification[2] covers six grades of high-strength low-alloy structural steel shapes, plates, sheet piling, and bars. Grades 42, 45, and 50 are intended for riveted, bolted, or welded construction of bridges, buildings, and other structures. Grades 55, 60, and 65 are intended for riveted or bolted construction of bridges, and for riveted bolted, or welded construction in other applications. When the steel is used in welded construction, welding procedure shall be suitable for the steel and the intended service.

1.2 For welded bridge construction notch toughness is an important requirement. For this or other applications where notch-toughness requirements are indicated, they shall be negotiated between the purchaser and the producer.

1.3 The use of columbium, vanadium, and nitrogen, or combinations thereof, within the limitations noted in 4. Chemical Composition, shall be at the option of the producer unless otherwise specified. Where designation of one of these elements or combination of elements is desired, reference is made to Supplementary Requirement S 1 in which these elements and their common combinations are listed as to type When such a designation is desired, both the grade and type must be specified.

1.4 The maximum thicknesses available in the grades and products covered by this specification are shown in Table 1.

NOTE 1.—The values stated in U.S. customary units are to be regarded as the standard. The metric equivalents of U.S. customary units given in this standard may be approximate

GENERAL REQUIREMENTS FOR DELIVERY

2.1 Material furnished under this specification shall conform to the applicable requirements of the current edition of AASHO M 160, General Requirements for Delivery of Rolled Steel Plates, Shapes, Sheet Piling, and Bars for Structural Use.

TABLE 1
Maximum Product Thickness

Grade	Yield Point, min		Maximum Thickness or Size		
			Plates and Bars		Structural Shapes and Sheet Piling
	psi	kgf/mm²	in	mm	
42[a]	42 000	29.5	4	101.6	All shapes up to 426 lb/ft (634 kg/m) inclusive and all Sheet Piling
45	45 000	31.6	1½	38.1	
50[a]	50 000	35 2	1½	38.1	
55	55 000	38 7	1½	38.1	
60[a]	60 000	42 2	1	25.4	Shapes Groups 1 and 2[b]
65	65 000	45 7	½	12 7	Shapes Group 1[b]

[a] In the above tabulation, Grades 42, 50, and 60 are the yield point strength levels most closely approximating a geometric progression pattern between 36,000 psi (25 3 kgf/mm²) min, yield point steels covered by AASHO M 183, Structural Steel and 100,000 psi (70.3 kgf/mm²) min, yield point steels covered by ASTM A 514, High-Yield Strength, Quenched and Tempered Alloy Steel Plate, Suitable for Welding.
[b] See AASHO M 160

[1] Except for the AASHO Supplementary requirement, this specification agrees with ASTM A 572–68.
[2] By publication of this specification, the American Association of State Highway Officials does not undertake to insure anyone utilizing the specification against liability for infringement of Letters Patent nor assume any such liability, and such publication should not be construed as a recommendation of any patented or proprietary application that may be involved.

TABLE 2
Chemical Requirements[a]

Grade	Carbon, max, per cent		Manganese[b] max, per cent		Phosphorus, max, per cent		Sulfur, max, per cent		Silicon[e]			
									Plates to 1½-in.[e] Thick, Shapes to 426 lb/ft, Sheet Piling, and Bars		Plates Over 1½-in. (38.1 mm) Thick	
									max, per cent		Range, per cent	
	Ladle	Check[d]	Ladle	Check[d]	Ladle	Check[d]	Ladle	Check[d]	Ladle	Check[d]	Ladle	Check[d]
42	0.21	0.25	1.35	1.40	0.04	0.05	0.05	0.06	0.30	0.35	0.15 to 0.30	0.10 to 0.35
45	0.22	0.26	1.35	1.40	0.04	0.05	0.05	0.06	0.30	0.35	.	.
50	0.23	0.27	1.35	1.40	0.04	0.05	0.05	0.06	0.30	0.35	.	...
55	0.25	0.29	1.35	1.40	0.04	0.05	0.05	0.06	0.30	0.35	.	.. .
60	0.26	0.30	1.35	1.40	0.04	0.05	0.05	0.06	0.30	0.35	.	.. .
65	0.26	0.30	1.35	1.40	0.04	0.05	0.05	0.06	0.30	0.35		....

[a] Copper when specified shall have a minimum content of 0.20 per cent by ladle analysis (0.18 per cent check analysis).
[b] Manganese, minimum by ladle analysis of 0.80 per cent (0.75 per cent check analysis) shall be required for all plates over ¾ in. in thickness, a minimum of 0.50 per cent (0.45 per cent check analysis) shall be required for plates ⅜ in. and less in thickness, and for all other products. The manganese to carbon ratio shall not be less than 2:1.
[c] Silicon content in excess of 0.30 per cent by ladle analysis must be negotiated.
[d] For bars, the check analysis tolerances shown in ASTM A 29, General Requirements for Hot-Rolled and Cold-Finished Carbon and Alloy Steel Bars.[3]
[e] Plates to 38.1 mm thick, shapes to 634 kg/m.

TABLE 3
Tensile Requirements

Grade	Yield Point, min		Tensile Strength, min		Minimum Elongation, per cent	
	psi	kgf/mm²	psi	kgf/mm²	in 8 in. (203.2 mm)	in 2 in. (50.8 mm)
42	42 000	29.5	60 000	42.2	20	24
45	45 000	31.6	60 000	42.2	19	22[a]
50	50 000	35.2	65 000	45.7	18	21[a]
55	55 000	38.7	70 000	49.2	17	20[a]
60	60 000	42.2	75 000	52.7	16	18[a]
65	65 000	45.7	80 000	56.2	15	..

[a] Applies to bars only (see ASTM A 370, Mechanical Testing of Steel Products)

TABLE 4
Bend Test Requirements

Thickness of Material,		Ratio of Bend Diameter to Thickness of Specimen[a]					
in	mm	Grade 42	Grade 45	Grade 50	Grade 55	Grade 60	Grade 65
⅝ and under	19 and under	1	1	1	1½	2	2½[b]
Over ⅝ to 1, incl.	19.0 to 25.4	1½	1½	1½	2	2½	...
Over 1 to 1½, incl	25.4 to 38.1	2	2	2½	3		...
Over 1½ to 2, incl	38.1 to 50.8	2½	2½[c]	3[c]	3½[c]	.	..
Over 2 to 4, incl.	50.8 to 101.6	3				.	

[a] The above ratios apply to the bending performance of a test specimen only. This specimen is always taken in the longitudinal direction and usually has some edge preparation. Where plates are to be bent in a fabricating operation, more liberal bend radii must be used, particularly if this bend axis is in the unfavorable (longitudinal) direction.
[b] ½ in., (12.7 mm) max. specimen thickness.
[c] Applicable to webs of structural shapes.

PROCESS

3.1 The steel shall be made by one or more of the following processes: open-hearth, basic-oxygen, or electric-furnace.

CHEMICAL COMPOSITION

4.1 When subjected to the ladle and check analysis, respectively, required by the provisions of AASHO M 160, the steel shall conform to the requirements for chemical composition prescribed in Table 2. Alloy content shall be in accordance with one of the following types:

[3] *Book of ASTM Standards*, Part 3.

	Ladle Analysis, per cent	Check Analysis, per cent
Columbium[a]	0.005 to 0.05	0.004 to 0.06
Vanadium . . .	0.01 to 0.10	0.005 to 0.11
Columbium[a] (0.05 per cent max) + vanadium.	0.02 to 0.10	0.01 to 0.11
Nitrogen[b] (with vanadium)	0.015 max	0.015 max

[a] Columbium when added either singly or in combination with vanadium unless combined with 0.15 per cent, min, silicon shall be restricted to plate or bar thicknesses of ½ in. (12.7 mm), max, and to shapes of Table A, Group I of AASHO M 160.

[b] Nitrogen (0.015 per cent, max) when added as a supplement to vanadium shall be reported, and the minimum ratio of vanadium to nitrogen shall be 4:1.

PHYSICAL REQUIREMENTS

5.1 *Tensile Properties:*

5.1.1 The material as represented by the test specimens shall conform to the requirements as to the tensile properties given in Table 3.

5.1.2 For material under 5/16 in. (7.9 mm) in thickness or diameter, a deduction from the percentage of elongation in 8 in. (203.2 mm) specified in Table 3, of 1.25 per cent shall be made for each decrease of 1/32 in. (0.8 mm) of the specified thickness or diameter below 5/16 in. (7.9 mm).

5.1.3 For material over ¾ in. (19.0 mm) in thickness or diameter, a deduction from the percentage of elongation in 8 in. (203.2 mm) specified in Table 3, of 0.50 per cent shall be made for each increase of ⅛ in. (3.2 mm) of the specified thickness or diameter above ¾ in. (19.0 mm). This deduction shall not exceed 3 per cent.

5.1.4 For material over 3½ in. (88.9 mm) in thickness or diameter, a deduction from the percentage of elongation in 2 in. (50.8 mm) specified in Table 3, of 0.50 per cent shall be made for each increase of ½ in. (12.7 mm) of the specified thickness or diameter above 3½ in. (88.9 mm).

5.2 *Bending Properties.*—The longitudinal bend test specimens shall stand being bent cold through 180 deg without cracking on the outside of the bent portion, to an inside diameter which shall have a relation to the thickness of the specimen as prescribed in Table 4.

NUMBER OF TESTS

6.1 Two tension and two bend tests shall be made from each heat unless the finished material from a heat is less than 50 tons, when one tension and one bend test will be sufficient. However, for material 2 in. (50.8 mm) and under in thickness, when the material from one heat differs ⅜ in. (9.5 mm) or more in thickness, one tension and one bend test shall be made from both the thickest and the thinnest material rolled regardless of weight represented. For material over 2 in. (50.8 mm) thick, when the material from one heat differs 1 in. (25.4 mm) or more in thickness, one tension and one bend test shall be made from both the thickest and the thinnest material rolled that is more than 2 in. (50.8 mm) thick regardless of the weight represented.

TEST REPORTS

7.1 When test reports are required by the purchase order, the report shall show the results of each test required by 6.1 except that only one test need be reported when the amount of material from a heat in a shipment is less than 10 tons and when the thickness variations described in the paragraph immediately above are not exceeded.

NOTE 2.—The thickness of the product tested may not necessarily be the same as an individual ordered thickness since it is the heat that is tested rather than each ordered item.

SUPPLEMENTARY REQUIREMENT

The following supplementary requirement shall apply when specified in the order or contract:

TYPES

S1.1 When a purchaser prefers to designate the specific elements (columbium, vanadium, nitrogen, or combinations thereof), one of the types listed below shall be specified. The type in addition to the grade must be shown on the order.

Type 1—Columbium

Type 2—Vanadium

Type 3—Columbium and vanadium

Type 4—Vanadium and nitrogen

S1.2 The composition limits of 4. Chemical Composition, shall apply for any of these types.

The following supplementary requirement shall apply when the steel is for use in welded bridges.

IMPACT PROPERTIES

S2.1 Welded construction of bridges shall be limited to Grades 42, 45, and 50 and to structural shapes in groups 1, 2 and 3 of AASHO M 160 and to plates and bars in thicknesses through 1½ in. (38.1 mm). Plates and bars over ¾ in. (19.0 mm) through 1½ in. (38.1 mm) in thickness shall be "killed-fine grain practice."

S2.2 The producer shall make and report to the customer, for informational purposes only, one impact test from the thickest material in each lot furnished. Each impact test shall be longitudinal Charpy V-notch test at 40 F (5 C) conforming to the requirements of ASTM A 370, paragraph 23.

S2.3 Satisfactory impact test data on previously produced steel covering the ranges of plate thicknesses and shape sizes to be furnished in the order shall be submitted by the producer to the customer for approval prior to ordering AASHO M 223 steel upon which welding is to be performed or the impact tests required in S2.2 shall be for acceptance of the steel instead of for informational purposes only for the ranges of material for which satisfactory impact data are not furnished and at least 95 percent of the longitudinal V-notch tests at 40 F (5 C) shall have values of not less than 15 foot-pounds (10.3 J). Data submitted shall be the producer's grade of steel proposed for the order which was rolled at the same mill from which the steel of the order is to be rolled.

S2.4 If more than 5 percent of the impact values from tests of steels furnished by a producer for a specific job under these requirements fall below 15 foot-pounds (10.3 J) at 40 F (5 C), the producer shall be required to indicate to the satisfaction of the Engineer what adequate changes in quality control and mill practice will be initiated to improve the notch toughness of his material before it is furnished for future orders. Failure to meet the impact properties required for informational purposes only in S2.2 shall not be cause for rejection of otherwise satisfactory material of an order.

S2.5 A lot, for purposes of impact testing, shall consist of 50 tons or fraction thereof of finished material from a single heat which is rolled on the same mill and is the same grade, condition, type of product (plate, bar, wide-flange, I, H, angle, etc.) and which is within one of the following thickness classifications:

1. Differing not more than ⅜ in. (9.5 mm) in thickness when the least thickness of the lot does not exceed 2 in. (50.8 mm).

2. Differing not more than 1 in. (25.4 mm) in thickness when the least thickness in the lot exceeds 2 in. (50.8 mm).

S2.6 The governing thickness for wide-flange, I, H and T sections shall be the average thickness of the flange. Test specimens for shapes shall be taken at a point one-third the distance from the outer edge of the flange or leg to the web or heel of the section.

—o—

Standard Specification for

Steel Structural Rivets

AASHO DESIGNATION: M 228–70
(ASTM DESIGNATION: A 502–65)

SCOPE

1.1 This specification covers two grades of steel rivets in diameters from ½ to 1½ in., incl, for structural fabricating purposes Grade 1 is a carbon steel rivet for general purposes. Grade 2 is a carbon-manganese steel rivet suitable, with proper riveting technique, for use with high-strength carbon and high-strength low alloy structural steels (Note 1).

NOTE 1.—Grade 1 rivets correspond to those formerly made from steel conforming to the Specification for Structural Rivet Steel (AASHO M 97), and Grade 2 rivets correspond to those formerly made from steel conforming to the Specification for High-Strength Structural Rivet Steel (AASHO M 98).

1.2 Rivets conforming to this specification may be made by either the hot- or cold-heading process. It is expected that these rivets ordinarily will be hot driven.

PROCESS

2.1 The steel for rivets shall be made by the open-hearth, basic-oxygen, or electric-furnace process.

CHEMICAL REQUIREMENTS

3.1 The rivets shall conform to the ladle and check analysis requirements for chemical composition given in Table 1.

TEST SPECIMENS

4.1 Rivets used for testing shall be heat treated in the following manner prior to testing:

4.1.1 *Grade 1.*—Normalize by air cooling from above the transformation range.

4.1.2 *Grade 2.*—Anneal by heating to 785 C (1450 F), holding for 30 min at temperature and cooling in the furnace.

MECHANICAL REQUIREMENTS

5.1 The rivets shall conform to the hardness requirements shown in Table 2. Hardness shall be measured on a transverse section through the shank of the rivet at a point one quarter of the nominal diameter from the axis of the rivet. This transverse section shall be taken at a distance from the end of the rivet which is equal to the diameter of the rivet. Except as noted below, either the Brinell or the Rockwell hardness test may be used. Test procedures shall conform to the Methods and Definitions for Mechanical Testing of Steel Products (ASTM A 370). Brinell hardness shall be measured at only one point. Rockwell hardness shall be measured at three points, equally spaced about the axis of the rivet, and the hardness shall be taken as the arithmetic average of the three measurements. When use of the Brinell hardness test in prohibited by proximity to the periphery of the section, measurement of hardness shall be made by the Rockwell hardness test.

DIMENSIONS

6.1 Dimensions of rivets, unless otherwise specified, shall conform to those of one of the head types provided in the American National Standard for Large Rivets (½ Inch Nominal Diameter and Larger) (ANS B 18.4).

TABLE 1
Chemical Requirements

	Grade 1		Grade 2	
	Ladle Analysis	Check Analysis[a]	Ladle Analysis	Check Analysis
Carbon, per cent	0.13 to 0.25	0.11 to 0.27	0.19 to 0.30	0.16 to 0.33
Manganese, per cent	0.30 to 0.70	0.27 to 0.93	1.20 to 1.65	1.14 to 1.71
Phosphorus, max, per cent:				
acid	0.06	0.070	0.06	0.070
basic	0.04	0.048	0.04	0.048
Sulfur, max, per cent	0.05	0.058	0.05	0.058
Silicon, per cent			0.10 to 0.30	0.08 to 0.32
Copper, when copper bearing steel is specified, min, per cent	0.20	0.18	0.20	0.18

[a] Check analysis is not applicable to rivets made from rimmed steel or merchant quality bars

TABLE 2
Hardness Requirements

	Grade 1		Grade 2	
	Min	Max	Min	Max
Rockwell, B	55	72	76	85
Brinell, 500-kg load, 10-mm ball	103	126	137	163

MARKING

7.1 Rivet heads shall be marked as follows to identify the grade, and shall also be marked to identify the manufacturer. Marking may be either raised or depressed at the option of the manufacturer.

Grade	Grade Marking
1	none required[a]
2	2

[a] The numeral 1 may be used at the manufacturer's option.

NUMBER OF TESTS AND RETESTS APPLICABLE FOR MECHANICAL (HARDNESS) TESTING AND CHEMICAL ANALYSIS

8.1 The requirements of this specification shall be met in continuous mass production for stock, and the manufacturer shall make sample inspections to ensure that the product conforms to the specified requirements. Additional tests of individual shipments of material are not ordinarily contemplated. Individual heats of steel are not identified in the finished product.

8.2 When specified in the order, the manufacturer shall furnish a test report certified to be the last completed set of mechanical tests for each stock size in each shipment.

8.3 Additional tests of individual shipments of rivets are not ordinarily required but when such additional tests are specified on the purchase order, a lot for the purpose of selecting test samples shall consist of all rivets in the shipment which have the following common characteristics:

8.3.1 One type of head,

8.3.2 One nominal diameter, and

8.3.3 One nominal length.

8.4 From each lot, the number of tests for each requirement shall be as follows:

Number of Pieces in Lot	Number of Samples
800 and under	1
801 to 8 000	2
8 001 to 22 000	3
Over 22 000	5

8.5 If any test specimen shows defective preparation it may be discarded and another specimen substituted.

8.6 Should any specimen fail to meet the requirements of its specified test, double the number of specimens from the same lot shall be tested for the property in which failure was found and all the additional specimens shall meet the specification requirements.

QUALITY LEVEL FOR VISUAL SOUNDNESS

9.1 *Inspection.*—Acceptable quality level (Note 2) for rivets shall be as given in Table 3.

NOTE 2.—The acceptable quality level (AQL) provides standards for visual soundness inspection. The standards used here are those of a recommended practice for large solid rivets formulated by the Industrial Fasteners Institute, June, 1965. That practice is based on "Military Standard, Sampling Procedures and Tables for Inspection by Attributes," MIL-STD-105D. Table 3 Provides levels of quality for various attributes or characteristics and these are given numerical value in Table 4.

9.2 The AQL sampling and inspection shall be conducted in accordance with the sample size, acceptance, and rejection values given in Table 4.

TABLE 3
Levels of Quality

Defect	Acceptable Quality Level
Crack or burst[a]	10.0
Duds (incompleted rivet or foreign material)	1.0

[a] Crack and burst are two names for the same thing. Each designates an abrupt interruption of the periphery of a rivet head by separation of the metal. Such interruptions do not adversely affect structural strength, corrosion resistance, or other functional requirements of the rivet, but are unsightly if they are large. For this reason, a rivet with a crack or burst having an opening at the periphery of the head which is wider than 0.020 in. plus 0.05 times the rivet diameter is considered defective.

TABLE 4
Numerical Values for Levels of Quality

Lot Size	Sample Size	Acceptable Quality Level			
		1.0		10.0	
		Acceptance[a]	Rejection[b]	Acceptance[a]	Rejection[b]
0 to 50	8	0	1	2	3
51 to 90	13	0	1	3	4
91 to 150	20	0	1	5	6
151 to 280	32	1	2	7	8
281 to 500	50	1	2	10	11
501 to 1200	80	2	3	14	15
1201 to 3200	125	3	4	21	22
3201 to 10 000	200	5	6	21	22
10 001 to 35 000	315	7	8	21	22
35 001 to 150 000	500	10	11	21	22
150 001 to 500 000	800	14	15	21	22
over 500 000	1250	21	22	21	22

[a] Defectives in sample permitted for acceptance of lot.
[b] Defectives in sample requiring rejection of lot.

INSPECTION

10.1 If the testing described in 8.3 is required by the purchaser, it shall be specified in the inquiry and contract or order.

10.2 The inspector representing the purchaser shall have free entry at all times, while work on the contract of the purchaser is being performed, to all parts of the manufacturer's works that concern the manufacture of the material ordered. The manufacturer shall afford the inspector all reasonable facilities, without charge, to satisfy him that the material is being furnished in accordance with this specification. All tests (except check analysis) and inspection shall be made at the place of manufacture prior to shipment, unless otherwise

specified, and shall be so conducted as not to interfere unnecessarily with the operation of the works.

REJECTION

11.1 Rejections based on requirements specified herein shall be reported to the manufacturer within 30 days after receipt of material by the purchaser.

———— o ————