AGENCY FOR INTERNATIONAL DEVELOPMENT
WASHINGTON, D. C. 20523
BIBLIOGRAPHIC INPUT SHEET

FOR AID USE ONLY ARDA
BATCH 78

1. SUBJECT CLASSIFICATION
A. PRIMARY: Food production and nutrition
B. SECONDARY: Research

2. TITLE AND SUBTITLE
Food and feed from food wastes and agricultural residues, a survey

3. AUTHOR(S)
(101) League for Int.Food Education, Washington,D.C.; Am.Inst. of Chemical Engineers, Washington,D.C.

4. DOCUMENT DATE: 1977
5. NUMBER OF PAGES: 382p.
6. ARC NUMBER: ARC

7. REFERENCE ORGANIZATION NAME AND ADDRESS
LIFE

8. SUPPLEMENTARY NOTES (Sponsoring Organization, Publishers, Availability)

9. ABSTRACT
This report is divided into three parts. The first contains conclusions, recommendations and methodology for selecting wastes for conversion along with a plant design and a program to implement this design. The second part is a survey of waste utilization for several major crops, based partly on existing literature and partly on the results of site visits done by the team. The third part contains the reports for the survey trips taken by the project's three teams. This study was conducted as an attempt to resolve two issues simultaneously - the environmental pollution created by food processing wastes and agricultural residues and the shortage of food in some areas of the world. The objectives were to develop a methodology for determining technical and economic feasibility of utilizing waste products for food or feed and to design a plant to convert such products. Waste or culled bananas were selected for use in the recommended pilot plant. These fruit constitute a major source of high-quality carbohydrate which currently goes to waste. Fermentation processes both increase the protein level and serve as a preservation technique. A non-aseptic fungal fermentation should be useful with bananas for the production of a high-protein animal feed supplement. A yeast-acid bacterial fermentation was selected for the production of a protein-enhanced foodstuff. A four-year effort is proposed, culminating in pilot plant production of quantities of both food and feed products sufficient for meaningful application testing.

10. CONTROL NUMBER
PN-AAF-304

11. PRICE OF DOCUMENT

12. DESCRIPTORS
Agricultural economics
Agricultural wastes
Feeding stuffs
Food losses
Food supply
Project planning
Residues
Surveys

13. PROJECT NUMBER

14. CONTRACT NUMBER
AID/ta-G-1235

15. TYPE OF DOCUMENT

AID 590-1 (4-74)

PN-AAF-304

This report is divided into three parts: Conclusions, recommendations and methodology for selecting wastes for conversion with a plant design and a program to implement this design; Survey of waste utilization for several

PN-AAF-304

Food And Feed From Food Wastes and Agricultural Residues

A Survey For The
U.S. Agency For International Development

(Grant ta-G-1235)

by the

League for International Food Education
American Insitute of Chemical Engineers

Project Directors: Stanley M. Barnett (May 1977 - Sept. 1977)
Marvin Fleischman (Sept. 1975 - May 1977)

Technical Advisory Committee: Hugh J. Roberts
Executive Director, L.I.F.E.

Les Lash
(Environmental Division, AIChE)
Envirotech Corp.

A. A. Winkler
(Food, Pharmaceutical and Bioengineering Division, AIChE)
CPC International

I. Hornstein
Deputy Director
Office of Nutrition, US AID

Survey Participants: Charles E. Dunlap (Team Leader)
Peter J. Reilly (Team Leader)
John M. Nystrom
Keith H. Steinkrauss
H. H. Schopmeyer
R. Meade

September 1, 1977

PREFACE

While trying to develop an introduction for this report, I attempted to make use of the common character in Chinese idiogram for the words opportunity and crisis, especially since the character can also be used to represent a machine. Unfortunately, my Chinese colleagues could find no way to allow me to use the common character to represent simultaneously, environmental crisis, food crisis, opportunity, and a process that might be used to turn the environmental crisis into an opportunity to solve the food crisis.

My lack of success almost parallels the result of our attempt to find ways to increase the amount of food available for our world's population by reducing the level of food waste creating environmental problems. In the food and environmental area the problem often involves government regulations, economics which may be artificial and occasionally local preferences. Our teams uncovered considerable levels of food and agricultural wastes which hopefully will become a food or feed in the near future. Nevertheless this report recommends at least one process which can be used as a prototype for converting other food and agricultural waste streams into food or feed and for international cooperation in the area of food processing education.

Our report is divided into three parts. The first contains our conclusions and recommendations with a methodology for selecting wastes for conversion, the recommended plant design and a program to implement the design; the second part contains the survey of waste utilization for several major crops, based partly on existing literature and partly on the results of our site visits, and the third portion, in the Appendix, contains the reports for the survey trips taken by the project's three teams. The trip

reports have been included in the Appendix for reference since much of the existing literature lacks immediate applicability. Since not all copies of the report will contain the trip reports, they will be made available on request.

ACKNOWLEDGEMENTS

The participants acknowledge with appreciation the advice and support of Dr. Hugh J. Roberts, Executive Director of L.I.F.E. We also appreciate the efforts of Ann Dyer, Associate Director and Susan J. Hunter, Administrative Assistant of L.I.F.E. to keep our project running smoothly.

We value the interest shown by I. Hornstein, Deputy Director, Technical Assistance Bureau, Office of Nutrition, U.S. Agency for International Development, in our project and for arranging several fruitful discussions as we progressed. Carol Adelman, our Project Officer for AID handled many details including our numerous complex and rushed foreign communications. We also thank all of the personnel of the U.S. Embassies and AID missions who assisted us.

We appreciate the advice and criticism of our advisors, L. Lash and A. A. Winkler representing the Environmental and the Food, Pharmaceutical and Bio-Chemical Engineering Divisions of the AIChE. We also acknowledge Dr. M. J. Forman (Director, Office of Nutrition, AID) and Dr. G. F. Bennett (President, L.I.F.E. Board of Directors) for initiating the study, and the financial support provided by AID through Dr. Forman's office.

Finally, we would like to thank all of our colleagues and interviewees in our survey for their generous hospitality, advice and their valuable time. Their assistant and interest in our study and recommendations is appreciated.

Table of Contents

Vol. I. Page

Preface i

Acknowledgements ii

Conclusions and Recommendations 1

Introduction 4

Recommended Pilot Plant: I-A Program for Implementing The Conversion of Waste Bananas Into Food & Feed 7

Recommended Pilot Plants: II-Design and Specifications 16

Methodology 25

Vol. II.

Survey of Food Wastes and Agricultural Residues by Crop:

Bananas 1

Brewery 50

Cassava 77

Coconuts 105

Coffee 159

Fish 173

Palm Oil 208

Pineapples 254

Rice 269

Sugar and Sugar By-products 299

CONCLUSIONS AND RECOMMENDATIONS

We conclude that the best opportunity to demonstrate the conservation, etc. is suitable microorganisms for the production of both food and feed products from waste bananas. The dual product capability represents a unique opportunity to satisfy local need and economics. Banana residues in many nations constitute a major source of high-quality carbohydrate creating environmental problems. A non-aseptic fungal fermentation, could be used to produce a high-protein animal feed supplement. A protein rich, acid preserved, human grade food could be produced by a yeast-acid bacterial fermentation.
The project may involve transfer of fermentation-of-cassava technology from Columbia, or fermentation-of-coffee wastes technology from Guatemala to major banana producers such as Ecuador, Honduras, Panama, or the Philippines. Additional supporting studies are also underway in the Philippines and the U.S. Beside producing sufficient quantities of food and feed products for application testing, a demonstration plant would enable the transfer of technology to other crop wastes. A pilot plant could also be used for training plant operators and food technologists. A pilot plant design follows. We are also including a brief proposal for implementing the construction of the pilot plants with associated studies.

2. Our surveys uncovered many examples of molasses being dumped or used to hold down road dust. We recommend that, in areas where this practice is carried out, AID funds be provided to help countries carry out a market analysis of molasses, possible by-products, and the possibility of government subsidized prices to make up for transportation costs. A plant can be constructed at an existing sugar mill for demonstration and training purposes.

3. We recommend support of work to produce a feed grade yeast or other food products such as fish (tilapia) from stillage (calda), and the aqueous residue remaining from the production of ethanol from molasses or raw cane juice. Failure to solve this old but rapidly expanding problem, created

by the demand for ethanol as fuel, may have a severe negative influence on the environment, particularly on another potential source of human food-streams.

4. The coffee mucilage project, underway at ICAITI in Guatemala, should be encouraged because the technology is transferable to other areas and crops, including cocoa processing in Ghana.

5. Engineers must be encouraged to work on methods of water removal from food products and wastes. Existing methods of drying must be optimized and work on the replacement of traditional drying operations expanded both in developing and developed countries. AID and other U.S. agencies, particularly ERDA and the U.S.D.A. should expand funding in this area. The lack of inexpensive drying methods appears to be a major reason for the neglect of food processing wastes as a raw material for further processing. The use of pineapple processing wastes as a cattle feed in Kenya was limited by its water content. Production of cassava in the hills around Cali, Columbia was limited by a drying step. Spent brewery grains were wasted in Ghana until a drying step was introduced. Energy costs may make a "stick water" concentration process uneconomical for fish processors in Peru. Food and environmental problems will become more dependent on solutions to the high cost of energy.

6. There appears to be a need for a set of standards to be used for determining true production costs. Air, water, land, and health must be assigned values, or a system for determining values must be developed, so that planners in each country can determine which path to take to produce more food, preserve the environment and health, and achieve employment goals. This is a particularly difficult area, but one which must be undertaken in order to establish the true value of products, expose hidden subsidies whose costs are not readily apparent, and aid planners trying to push a program that has few

immediately visible benefits.

7. We seem to be caught in an economic trap, a fact I have yet to hear discussed at the many recent food conferences. For example, potatoes are allowed to rot on South American fields because the price is so low it is not worthwhile to collect them. Yet if we produce a high protein product to replace the wasted food the price is often too high for those who need it. If we produce that product or any food crop on a large enough scale, or provide a subsidy, to reduce prices so that most can afford it, we make it more likely that good food, such as potatoes, will continue to be wasted. High prices mean poor distribution, yet low prices will reduce production so that less is available. Low prices mean more people leave the food growing areas to join growing city slums which cannot produce the necessary food. A study may be required in a few selected developing countries, to indicate paths to take with regard to the proper economic policies to develop a viable food production system and a healthy population.

8. A program should be established in Zambia to accelerate the training of food area personnel, both at technician and professional levels. Such a program should be of value wherever politics dictate the rapid replacement of outside experts by locals.

INTRODUCTION

Despite numerous conferences, discussions, and debates in the past five years, food still remains one of the most complex economic, ethical, political and technical problems of our times. Straight forward solutions to the problem of scarcity are difficult to put into effect within the existing system due to complex feedback patterns. Yet the world cannot continue to produce and distribute food as it has for the past few decades because of the relationships between food, environment, population and energy. We are becoming more readily aware of the fact that we are now limited to the resources of this planet.

One solution is to study the system and modify or control it until the desired response is achieved. Because of the moral and political constraints associated with the food, energy, population and environmental problems, the engineer or scientist has been satisfied to work with the individual components of the system - food, energy, the environment, or even smaller segments. This study is an attempt to return to consideration of the whole system by looking at an area where the interaction of at least two components, environmental pollution and the food shortage, may enable a solution to the two problems.

The world food crisis has been well documented (1) as has been the apparent recovery. We will not attempt to repeat what is readily available. Certain factors however, appear more important than others:

i. As incomes increase, people can be expected to spend more of their income on protein foods, particularly protein of animal origin (2).

ii. As industrialization continues, food production will become more concentrated creating greater quantities of waste at a given location. While this can create greater environmental problems, the concentrated waste can often be more easily reassimilated into the food cycle.

(1) S. Aziz, Proceedings in The World Food Conference of 1976, Iowa State University Press, Ames, 1977, pp. 16-18.

(2) R.C. Loehr, Utilization of Residues From Agriculture and Agro-Industries, UNEP/FAO Conference, Residue Utilization-Management of Agricultural and Industrial Wastes, Jan. 18-21, 1977, Rome

iii. The increase need for nutrients by modern agriculture suggests more efficient utilization of the products, including traditional agricultural waste.

iv. Due to droughts and other natural disasters, food must either be stockpiled or alternative methods of food and feed production must be developed which are less dependent upon local conditions.

v. Regardless of the total level of food available in the world, there is a good shortage in many areas. Population projections suggest that the problem will worsen (3).

vi. Because of the need to produce food as rapidly and as cheaply as possible, considerable pressures are placed on the environment by dumping, burning wastes, and poor land clearing methods. This type of environmental pollution will lead to further deterioration of existing and future resources for food production.

vii. Introduction to non-agricultural sources of food can provide the opportunity to increase the total food energy supply (4). Utilization of traditional wastes for production of single cell protein is an available method.

This study was launched as an attempt to resolve two issues simultaneously - the environmental pollution created by food processing wastes and agricultural residues and the shortage of food in some areas of the world. The objectives were to develop a methodology, implicit in this report, for determining technical and economic feasibility of utilizing waste products for food or feed and to prepare a plan for one plant to convert such products to nutrients for human or animal consumption. The study is the product of two divisions of the American Institute of Chemical Engineers (AIChE), the Environmental Division and the Food, Pharmaceutical and Bioengineering Division. The AIChE is a member of the consortium of technical societies, the League for International Food Education (LIFE). The study was made possible by a grant from the U.S. Agency for International Development to L.I.F.E., to be carried out by the AIChE, a member society. The study's participants are all members of the AIChE or two other L.I.F.E. consortium societies, The American Chemical Society and the Institute of Food Technologists.

(3) ibid.

(4) M. Brin, Nutrient Intervention to Improve Nutritional Status, in New Protein Foods vol. 2B, A.M. Altschul, editor, Academic Press, New York 1976.

Participants from the AIChE were drawn from two areas, environmental engineering represented by M. Fleischman, and the biochemical engineering area represented by C. E. Dunlap, J. M. Nystrom, P. J. Reilly and S. M. Barnett. The second group was involved because of their work on biological treatment of cellulose, hemicelluloses and lignins, the major components of agricultural residues and food processing wastes. K. Steinkraus, R. Meade, H. H. Schopmeyer and S. M. Barnett represented the food technology and food industry component.

The countries visited were chosen because interest was expressed by local technical groups, government agencies, or industry in converting wastes into a useful product. Several of the countries visited cannot be considered developing countries due to their high level of technical expertise and their ability to make use of this valuable resource. Many of the non-US participants in the study were contacted because their work was known to be relevent to this study by our survey team members. Our colleagues in each country often prepared the team's schedule and were particularly valuable in arranging visits to both laboratories and small and large scale industries. Due to time constraints, many desireable visits were left out. Based upon discussions and available literature, the survey team members believe they obtained a reasonable estimate of food waste availability, possible methods of utilization, and local influences in each country visited.

The following proposed waste banana process represents our estimate of a pilot facility most likely to achieve the following goals:

i. reducing a current food waste which creates an environmental problem

ii. producing a feed which can be used to increase the amount of protein available in participating countries

iii. universality of the waste stream

iv. provides basis for technology transfer to other crops and to eventual direct production of a human grade food

v. there is considerable local interest in making use of this waste stream and interest and markets for the output.

Recommended Pilot Plant

I. The Application of Food and Feed Fermentations to Waste Bananas

Charles E. Dunlap, Ph.D.
Dept. of Chemical Engineering
University of Missouri
Columbia, MO 65201

Summary:

Waste or culled bananas in many banana exporting nations constitute a major source of high-quality carbohydrate which, because of the perishable nature of the fruit, currently goes to waste. A properly chosen and applied fermentation processes both increase the protein level of this material as well as serve as a preservation technique. Non-aseptic fungal fermentation, currently used with cassava, should be useful with bananas for the production of a high-protein animal feed supplement; and yeast-acid bacterial fermentation should be useful for the production of a protein-enhanced, acid-preserved foodstuff.

A program is suggested which involves a U.S. - based research effort and a capable development institution in a tropical, banana producing nation. A four-year effort is proposed which culminates in pilot plant production of quantities of both food and feed products sufficient for meaningful application testing.

Introduction:

The Trip Report - AIChE-AID/LIFE Survey Team II, (Barnett, S., J. Nystrom, and C. Dunlap)*, and Final Trip Report: Advising Visit to ESPOL, (Dumlap, C., and C. Cooney)* cover in detail the production, availability, properties, market situation, and value of bananas in the world's banana exporting countries. These reports also cover the status and needs of tropical animal and animal feed industries. The need for the development of simple, easy-to-apply, and inexpensive fermentation processes for bananas is documented, and the technology of several fermentations is discussed. The reader is referred to these reports for elucidation of these points at this time.

This document will present a proposed framewrok and outline for a development project which fulfills pilot facility requirement of the AIChE-AID/LIFE project by applying appropriate fermentation technology to waste bananas for the recovery of nutritionally valuable products.

Objectives:

The general objective of this project will be to apply existing food and feed fermentation technology to bananas to demonstrate standard processes which can be used in developing, tropical nations for the improvement of the nutritional contribution of bananas in the national diet.

Although exisitng technology is sufficient for construction of a pilot plant for production of fungal protein from banana wastes, some additional research is necessary in order to optimize the organisms and condition for production of both food and feed. This phase is necessary.

Specific Objectives:

1. To carry out the research and development work necessary to transfer to use with bananas the non-aseptic, low-pH, high-

---

* Report prepared for the League for International Food Education
16th Street, N.W.
Washington, D.C.

temperature growth of Aspergillus fumigatus (or other suitable fungi) as currently practiced (at CIAT) using cassava. The product will be a high-protein, dry meal suitable for use in complete animal rations.

2. To carry out research and development work necessary to transfer to use with bananas a yeast-acid bacterial fermentation common to many food fermentations in current use in developing nations. The product will be a protein-enhanced, acid-preserved foodstuff directly consumable by humans.
3. To construct a pilot plant capable of carrying out either of the two proposed processes on a scale from which valid operating data can be obtained. The pilot plant design is specified in the following section.
4. To operate the pilot plant using the two proposed processes for the production of a sufficient amount of both products to permit valid preliminary testing.

Research Program:

The research program that is proposed will concentrate first on the attainment of objectives 1, 2 and 3 concurrently. Phase 4 will follow in sequence. The research plan is defined as follows for completion of these objectives:

A. Non-Aseptic, Fungal Fermentation of Bananas for Animal Feeds

1. Choice of organism: Several strains of fungi (including A. fumigatus, Endomycopsis, and other fungi with records of nutritional application) will be tested under controlled growth conditions using bananas as substrate. Organisms for further testing will be selected on the basis of rate and extent of growth on banana at high temperatures and at low pH. This study should be out while pilot plant construction proceeds.

2. Substrate Preparation: Bananas at various stages of ripeness, and before and after some hydrolysis treatment will be tested for suitability as a substrate for SCP production. An attempt will be made to devise a banana preparation technique that can use whole bananas, and will result in high cell yields at minimum cost.
3. Medium Studies: The levels and types of inorganic and organic nutrients and growth factors necessary for maximum cell growth rate and substrate utilization extent will be determined in media using banana as the sole carbon source. This study should be initiated while plant construction proceeds.
4. Optimization of Fermentation Conditions: After organisms, medium, and method of substrate preparation have been chosen, fermentation conditions such as temperature, pH control, aeration, and agitation which produce maximum cell yield, high growth rate, and most complete extent of substrate utilization will be determined. This phase can be carried out as construction proceeds.
5. Product Harvesting and Treatment: Research phases 1 through 4 will be used to produce finished cell cultures to be used for the determination of proper harvesting techniques. The harvested mycelial mass will then be air-dried (sun-dried), and mechanically dried and ground to determine lowest-cost methods for harvesting, drying, and size reduction.
6. Process Design: Information from the first 5 phases will be used to design a standard process which can be carried out in common equipment, and which produces a product with little variation in quality.
7. Pilot Plant and Construction: A pilot plant will be constructed to carry out the suggested process, as well as Process B. Capacity

will be such that sufficient product may be produced for valid animal feeding trials, and the size will be such that valid scale-up parameters may be found.

8. Pilot Plant Operation: The pilot plant will be operated according to the process design criteria. Further optimization will take place, and operating data will be taken to fully define (and permit scale-up of) the process. Sufficient product will be produced to permit animal feeding tests.

B. Yeast-Acid Bacterial Fermentation of Bananas for A Protein-Enriched Acid-Preserved Food

1. Selection of Organisms: Several strains of yeast (including *Candida* sp., and *Saccharomyces* sp.), and several strains of acid-producing bacteria (including *Lactobacillus* sp.), which have a history of successful human nutritional use will be grown symbiotically and sequentially on banana solids under controlled conditions to select organisms which successfully convert banana carbohydrate to protein; produce sufficient organic acid to preserve the culture; produce odors and tastes acceptable to humans; and complete the desired processing in a reasonably short time.

2. Substrate Preparation: Banana pulp at various stages of ripeness, and with and without some hydrolysis treatment will be evaluated for suitability as a substrate for the organisms chosen in phase 1. An effort will be made to find the least-cost method of preparing the pulp for the fermentation while retaining or maximizing such qualities as final protein content, ease of fermentation, product odor and taste, and preservation qualities of the finished product.

3. Medium Studies: Types and levels of inorganics and growth factors included with banana pulp in the medium will be studied. The optimization criteria will be speed and completeness of the fermentation while retaining product safety and palatability.

4. Optimization of Fermentation Conditions: Such variables as temperature, aeration, and agitation will be investigated to permit the selection of processing steps and conditions on a timed basis which will result in a product of suitable quality and low variability.
5. Product Harvesting and Treatment: Techniques for harvesting, concentrating (if necessary), packaging, and storing the product will be selected and tested.
6. Process Design: (same as for Process A)
7. Pilot Plant Design and Construction: (same as for Process A - in fact, the same pilot plant is to be used in a dual-purpose fashion
8. Pilot Plant Operation: (same as for Process A except that human food will be produced)

Project Schedule:

First Year:	Phases A1, A2, A3 & A7; and B1, B2, and B3 will be initiated and well toward completion by the end of the first year.
Second Year:	Phases A1-3 and B1-3 will be completed and phases A4-6, and B4-6 will be complete by the end of the second year.
Third Year:	Phases A7 and B7 will be completed, and A8 and B8 will be initiated.
Fourth Year:	Phases A8 and B8 will be continued to conclusion of the project.

Project Participants:

It is proposed that this project be carried out at three locations, each with specific duties which match demonstrated capabilities and expertise. The project should have overall direction and coordination from one of these three participating facilities. The desired capabilities of the three facilities are noted below.

Facility A: A U.S. laboratory with experience in the use of biochemical engineering and fermentation technology for the production of animal feeds and single-cell protein from carbohydrates. A good familiarity with the applications of such technology in developing tropical nations is necessary.

Facility B: A U.S. laboratory with experience in the use of biochemical engineering and fermentation, technology for the production of fermented carbohydrate foods suitable for human consumption. Again, a familiarity with tropical applications is necessary.

Facility C: A facility in a tropical, banana exporting nation capable of high quality technical research and development work in the area of fermentation technology. Some formal contact with, or recognition by, indigeneous industry is necessary.

It is suggested that responsibility for the several phases of the work be assigned as follows to these three facilities:

---------- Facilities ----------

	A	B	C
1st year	A1, A2, A3 primary responsibility	B1, B2, B3 primary responsibility	Monitoring A1-3, B1-3
2nd year	A4, A5, A6 primary responsibility	B4, B5, B6 primary responsibility	Monitoring and consultation on A4-6, B4-6
3rd year	A7 Design phase carried out jointly	B7	A7, B7
4th year	A8 monitoring and consultation	B8 monitoring and consultation	A8, B8 primary responsibility

Budget:

Estimated budget for the project can be presented in the same format as the above Project Activity Plan.

Estimated Budget (US$1,000)

Year	Facility A	Facility B	Facility C	Total
1	50	50	20	120
2	50	50	75	175
3	20	20	220	260
4	20	20	80	120
	140	140	395	675

Suggested Facilities:

Facility A: Department of Chemical Engineering
University of Missouri--Columbia
Columbia, MO 65201

Dr. Charles E. Dunlap
Project Director and Co-Principal Investigator

Facility B: Department of Nutrition and Food Science
Massachusetts Institute of Technology
Cambridge, MA 02139

Dr. Charles L. Cooney
Project Co-Principal Investigator

Facility C: Instituto Centro Americano de
Investigation Y Technologia Industrial (ICAITI)
Guatemala City, Guatemala

Mr. Carlos Rolz
Project Co-Principal Investigator

vi. international technical cooperation will be fostered between many countries.

Possible locations for the pilot plant are suggested. The recommended design is for production of both human food and animal feed, an advantage if the plant is to be adapted to areas with different needs.

A methodology is outlined, listing the questions to be asked by a planner considering production of a food or feed from food waste or agricultural residue. The questions were those asked by our survey team members in order to rank potential wastes and processes according to nutritional needs, environmental factors, economics, and technical requirements. The questions are set up so, if we prepared a computer program for them.

PRELIMINARY DESIGN AND SPECIFICATIONS

A Pilot Plant for the Production of Fermented Banana Products

Basis: •Production of 100 lbs./day of dry, feed-grade protein concentrate; or;

•Production of 1000 gal./week of acid-stabilized, fermented banana foodstuff.

Description:

This is a preliminary design and economic analysis for a pilot plant facility which produces a fungal SCP product (100 lb./day, protein content 23%), and has the capability of producing an acid-stabilized, bacterially fermented food product from bananas. Either green or ripe bananas may be used in the feed fermentation, and ripe bananas may be used in the acid, food fermentation. Bananas used for feed production are dumped into a hopper from which they are fed whole to a single-runner attrition mill along with liquid medium to accomplish a size reduction and wet-milling operation. The banana-containing medium is pumped directly to one of two 575 gal. fermenters (460 gal. working volume) where the medium is heated to 80°C and cooled to an operating temperature of 45°C. The pH is adjusted to 3.5-4.0, and the vessel is inoculated with a seed culture of asporogenous A. fumigatus. The fermentation is aerated and agitated under controlled temperature and pH for 20-24 hours. The completed fermentation broth is pumped to a product holding tank. The broth is then flowed to a rotary vacuum filter where the mycelial and fiber solids are removed and partially dewatered. These solids next are dried either in a forced-air dryer or on a sun-drying floor. After drying they are fed through a mill to produce a flaked or powdered product.

For production of an acid-stabilized, food-grade, fermented banana product ripe bananas could be fed from the hopper to the belt conveyor where they are hand peeled. The fruit pulp is fed into a large, positive-displacement pump where it is mascerated and homogenized. The puree then is sterilized, cooled, and pumped to one of the two fermenters (now being operated under anaerobic conditions). The fermenter could be inoculated with Lactobacillus, or other desired organism(s) and the fermentation carried to completion. The product would then be ready for consumption.

Material Balance:

Block flow diagrams with material balances are presented for both the SCP feed process and the proposed food product process.

A. Fungal Fermentation for High-Protein Animal Feed

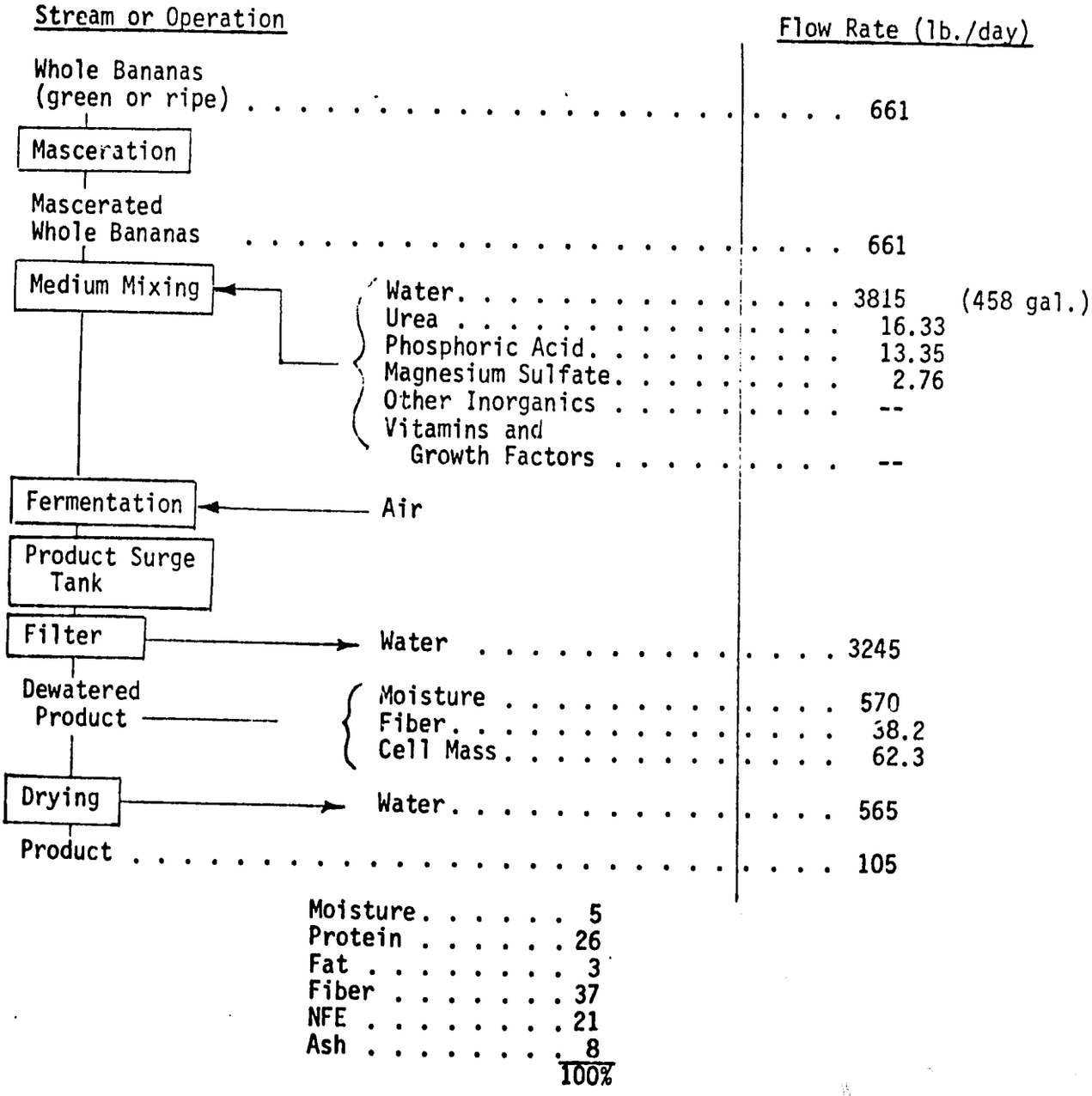

B. Acid-Stabilized Food Product

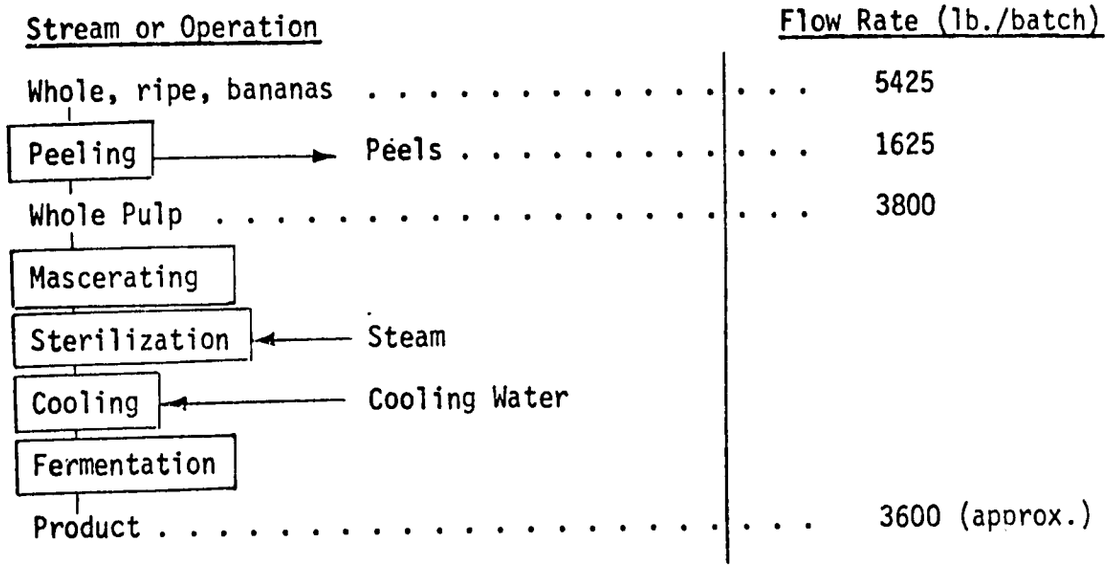

Process Design:

The flow diagram for the pilot plant is shown in the following equipment flow sheet. All major pieces of process equipment are listed and preliminary specifications are given in the list of major process equipment.

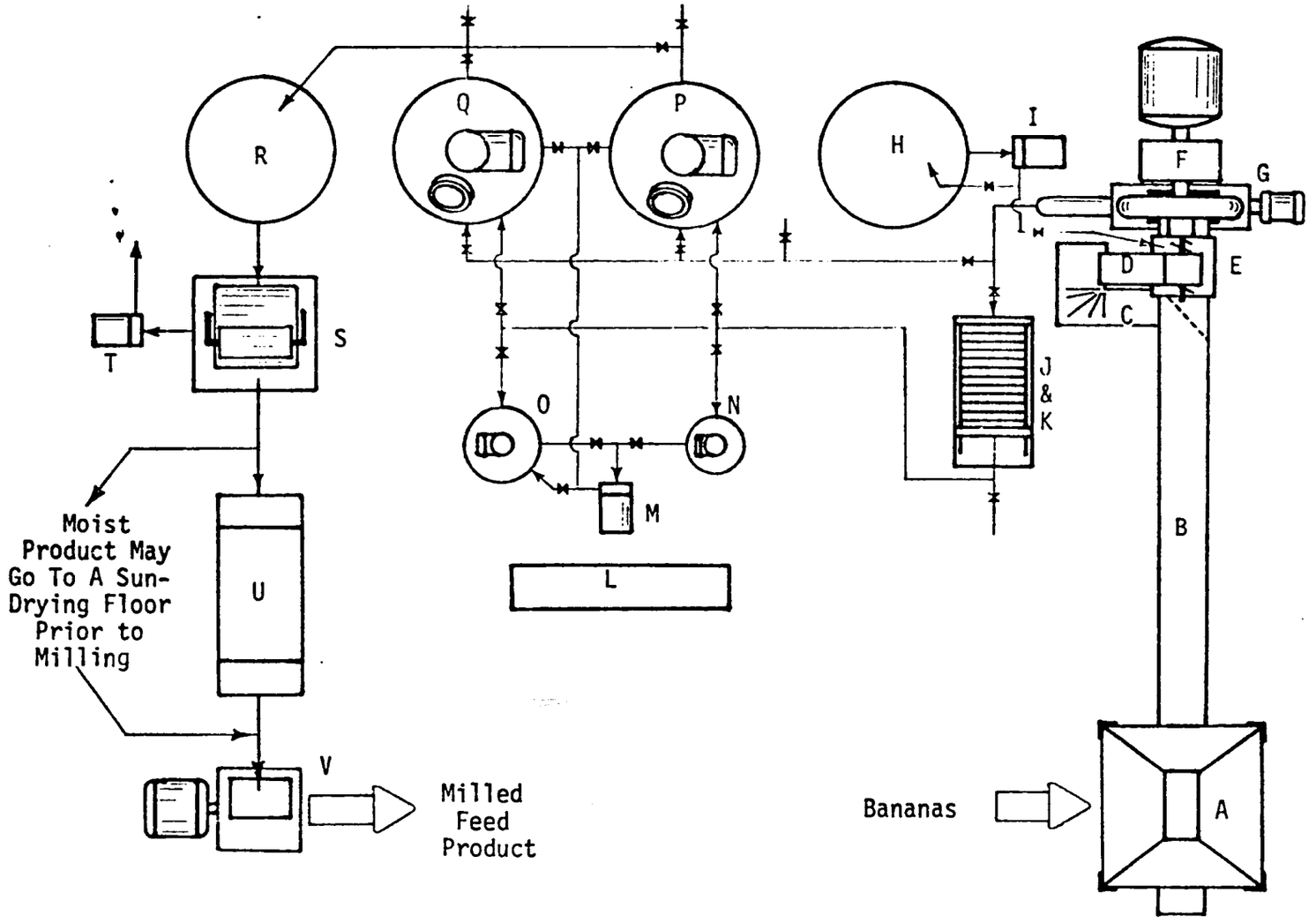

Preliminary Flow Sheet - Banana Fermentation Pilot Plant

NO SCALE

9/20/77

Process Equipment Listing

(all equipment is keyed to the equipment flow sheet)

A. Hopper: To hold bananas for controlled rate feeding to belt conveyor; square sided, rectangular bottom outlet with manual slide gate, open top, mild steel, painted, on steel legs to clear belt conveyor.

Capacity: 64 $ft.^3$

Power: N/A

Estimated Cost: $2,230.00

B. Conveyor: Flat or troughed belt conveyor to feed bananas at a controlled rate to either attrition mill elevator hopper (C) or Moyno pump (G); variable speed drive, to be 34" off floor to permit hand peeling from belt, to be 28' long.

Capacity: 1 ton/hr. whole fruit

Power: 3 HP

Estimated Cost: $5,400.00

C. Elevator Surge Hopper: Hopper with removable diverter to clear fruit from belt conveyor (B) and transfer to pick-up by mill feed elevator (D); mild steel, painted.

Capacity: N/A

Power: N/A

Estimated Cost: $ 700.00

D. Mill Feed Elevator: To raise fruit from feed elevator hopper (C) to mill feed hopper (E); total height of lift is 7', bucket-type elevator, mild steel, painted.

Capacity: 1 ton/hr. fresh fruit

Power: 2 HP

Estimated Cost: $2,200.00

E. Mill Feed Hopper: Vee hopper with positive screw feeder on bottom to force feed fruit into attrition mill (F), mild steel, painted, to be mounted in-line with mill feed port.

Capacity: 1 ton/hr. fresh fruit

Power: 1 HP

Estimated Cost: $1,600.00

F. Attrition Mill: Single runner, forced-fed, 18" attrition mill to carry out masceration of fresh, green or ripe, bananas with added liquid medium, mild steel parts except attrition discs, to be mounted on steel frame above Moyno pump (G), and with product outlet port to feed Moyno pump inlet.

Capacity: 1 ton/hr. fresh fruit

Power: 25 HP

Estimated Cost: $6,500.00

G. Moyno Pump: To receive whole banana pulps from conveyor belt (B) after hand peeling, or mascerated whole fruit and liquid medium from attrition mill (F), to pump stream either to an outlet flush, or to sterilizer (J), or fermenters (P) (Q), rubber stator, stainless steel rotor, variable speed gear drive.

Capacity: 500 GPH of mascerated banana pulp or a stream containing 60 g/l dry weight of mascerated whole bananas at up to 30 psig.

Power: 5 HP

Estimated Cost: $7,400.00

H. Medium Make-Up Tank: To permit mixing and make-up of total fermentation liquid medium (less bananas) in a batch; open-topped, mild steel, painted inside and outside with epoxy-based enamel, pump-recycle agitation, elliptical bottom with bottom drain, on legs, outlet 24" off floor.

Capacity: 600 gal. (80 $ft.^3$)

Power: N/A

Estimated Cost: $3,540.00

I. Medium Pump: Centrifugal pump, mild steel, to provide recycle mixing to medium make-up tank (H) and to pump medium to mill feed hopper (E) at a controlled rate (using bypass to tank).

Capacity: 40 GPM (water) at 15 psig outlet, 2 psig inlet

Power: 2 HP

Estimated Cost: $1,090.00

J. Sterilizing Heat Exchanger, and (K) Cooler: Plate-and-frame exchanger to heat banana puree from ambient temp. to 280°F with condensing steam, to provide 8 min. holding time for puree, to be stainless steel; also to provide cooling section (K) to cool puree to 120°F prior to outlet using water at 80°F. Estimated heat transfer surface necessary is 100 ft.^{2} in heating section and 100 ft.^{2} in cooling section.

Capacity: 100 GPH of banana puree

Power: N/A

Estimated Cost: $8,200.00

L. Fermenter Control Panel: To contain central controls and readout devices for the control of aeration, temperature, pH, and antifoam agent addition of all fermenters (O, N, P, Q) and to provide recording of pH and temperature, also to provide readout devices for agitation rates; each of the four fermenters to be controlled separately.

Capacity: N/A

Power: 4 HP Eqv.

Estimated Cost: $21,200.00

M. Inoculum Transfer Pump: Centrifugal pump to transfer contents of seed fermenter (N) to either O, P, or Q, or to transfer contents of seed fermenter (O) to either P, or Q, to be stainless steel.

Capacity: 10 GPM (water) at 15 psig

Power: 0.5 HP

Estimated Cost: $1,300.00

N. Seed Fermenter I: Small, batch-type, fermenter for propagation of inoculum from lab cultures; to be stainless steel, to have controlled anti-foam addition, pH, agitation, and temperature, cost to include all ports, valves, sensors, insulation, and internals.

Capacity: 20 liters

Power: 1 HP

Estimated Cost: $4,200.00

O. Seed Fermenter II: (as in N.)

Capacity: 200 liters

Power: 2 HP

Estimated Cost: $6,000.00

P. Fermenter I: Batch-type fermenter, baffled, turbine agitated, with dimpled jacket sides and bottom with fittings and sensors for pH, temperature, agitation, foam control, and aeration; to be operated under either aerobic or anaerobic conditions, to have variable-speed agitation; with elliptical heads top and bottom, all stainless steel construction.

Capacity: 575 gal. (480 gal. working volume); to be 3½' I.D. x 8' tall, on legs for floor mounting.

Power: 10 HP

Estimated Cost: $22,500.00

Q. Fermenter II: (as in P.)

Capacity: (as in P.)

Power: (as in P.)

Estimated Cost: $22,500.00

R. Product Surge Tank: To store product broth from fermenters P and Q prior to filtration; mild steel with epoxy paint inside and outside, on legs for floor mounting, open top, elliptical bottom.

Capacity: 600 gal. (80 ft.^{3})

Power: N/A

Estimated Cost: $3,540.00

S. Filter: Carter-Edco-type rotary compression filter to remove solids (mycelia plus fiber) from feed fermentation finished broth, to produce solids cake with 25% solids, mild steel construction.

Capacity: 100 lbs. dry solids (480 gal. liquid) in 4-6 hrs.

Power: 0.5 HP

Estimated Cost: $17,400.00

T. Filtrate Pump: Centrifugal pump to remove filtrate from filter sump and transfer to recycle or drain; mild steel.

Capacity: 10 GPM at 10 psig

Power: 0.5 HP

Estimated Cost: $1,300.00

U. Dryer: Rotary drum or batch vacuum pan dryer to dry dewatered mycelia-fiber product from 75% moisture to less than 5% moisture.

Capacity: 400 lbs. of 75% moisture product to less than 5% moisture in 4-6 hrs. To evaporate 50-75 lbs. of water per hour.

Power: 1 HP

Estimated Cost: $8,160.00

V. Flaking Mill: Hammer mill to reduce dry product to a homogeneous meal.

Capacity: 100 lbs./hr. of dry product

Power: 4 HP

Estimated Cost: $2,100.00

Summary of Capital Equipment Cost

Item	Cost
A	2,230
B	5,400
C	700
D	2,200
E	1,600
F	6,500
G	7,400
H	3,540
I	1,090
J	8,200
K	
L	21,200
M	1,300
N	4,200
O	6,000
P	22,500
Q	22,500
R	3,540
S	17,400
T	1,300
U	3,160
V	2,100
Estimated total cost of pilot plant major equipment	$149,060

Calculation of Installed Plant Cost

It is assumed that the pilot plant will be installed in an existing building needing only minor modification for foundations and footings, gas and electrical hookups, lighting, ventilation, and building services.

No design or engineering fees will be charged against the plant. It is estimated that necessary utility and building modifications, electrical systems, piping, valves, insulation, and all installation labor charges will amount to 0.8 times the cost of major process equipment. These charges would, therefore, be $119,250.

The estimated total installed cost of the pilot plant would be $268,300.

Estimated Pilot Plant Operating Costs

A. Production of Feed Protein Product (300 day/year operation)

Cost Area	$/Ton	Ton/yr.	$/yr.	$/Ton Product
Raw Materials:				
Bananas	8.00	100	800	50.36
Urea	180.00	2.47	445	27.99
Phosphoric acid	160.00	2.02	323	20.35
Magnesium sulfate	122.00	0.41	50	3.15
Other inorganics	--	--	100	6.30
Growth factors	--	--	100	6.30
Estimated raw materials cost:			1818	114.45
Labor:				
Shift 1:				
Operator (1) @ $2.30/hr.			5,520	
General helpers (2) @ $1.80/hr.			8,640	
Shift 2:				
Operator (1) @ $2.30/hr.			5,520	
Shift 3:				
Operator (1) @ $2.30/hr.			5,520	
Estimated labor cost:			25,200	1587
Supervision:				
No charge			--	--
Plant Supplies:				
Maintenance of plant process equipment at 2% of equipment cost per year			5,360	337.50
Royalties and Patents:				
No charge			--	--
Utilities:				
Electricity				
Estimated use of 596 HP hrs/day, or 178,800 HP hrs./yr., or 133,432 KWH/yr. @ $0.101 KWH			13,343	840
Steam				
Sterilizing and drying only; estimated use of 200,000 lbs./yr. @ $4.00/1000 lbs.			800	50.36
Water				
Estimated use of 150,000 gal./yr. at $0.65/1000 gal.			97.50	6.14
Direct Manufacturing Cost:			46,618.50	2,935.67*
Indirect Manufacturing Cost (Assumed zero for pilot plant)			--	--
Depreciation				
Fixed capital depreciated over 10 years by straight-line method			14,906	938.67
Taxes and Insurance are assumed by parent organization			--	--
Estimated total cost of manufacturing per year			$61,524.50	$3,874.34*

*Note: Estimated cost per unit of product is very high for the pilot plant due to low production level. Great economies of scale may be realized per unit of product in charges for labor, depreciation, and utilities when plant is scaled up to production size.

Methodology for Evaluating Feasibility of Using a Waste(s) as Food or Feed in Lesser Developed Countries

An outline is presented of the factors which must be evaluated to determine the suitability of using a specific agricultural or agro-industry residue as food or feed in a specific lesser developed country. The details of this methodology is implicit in the evaluation of waste utilization made in the AIChE AID/LIFE project.

A. Are the residues currently being wasted?

1. No - Other utilization possibilities could be evaluated.

2. Yes - Obtain the following information:

   a. Form of waste-solid, liquid, aqueous

   b. Composition (quality) of waste

   c. Where and how dumped

   d. Treatability of waste for safe disposal

   e. Cost of waste treatment

   f. Factors inhibiting waste treatment, e.g. large land requirements.

   g. Significance of environmental impact of the waste.

3. What is the degree of governmental and industry environmental awareness and concern in the country?

   a. Are there pollution laws?

   b. If yes, are they enforced?

   c. Does the appropriate industry feel that the standards are too strict?

   d. Is industry cooperative in controlling deleterious waste streams or is governmental pressure necessary?

B. Are there nutritional needs which can be met by direct or indirect use of these wastes and incentive and interest in doing so?

1. What are the nutritional needs of the people in the country?

2. Can waste utilization help meet these needs via use in the country as:

   a. Human food

   b. Animal feed

3. Are there export possibilities for products made from the waste? For example, in Indonesia, due to processing and transportation costs products made from thrash fish will be exported to Japan.

4. What are the profit possibilities of by-product utilization?

5. Are companies interested in diversification, i.e. new products made from waste?

6. Is governmental environmental pressure necessary for waste utilization? For example, due to governmental pressure in the Philippines, coconut water from desiccated coconut factories will be used to make yeast and vinegar.

7. Are local government, industry and researchers receptive to waste utilization projects?

C. What is the availability of the waste(s)?

1. What is the volume of waste available for utilization?

2. Is waste generation seasonal, e.g. crops grown and processed only part of the year?

3. Are there periodic surpluses of waste, e.g. pineapple cannery wastes?

4. For seasonal generation, is storage of wastes necessary, and if so, are storage facilities available?

5. Can wastes from seasonal crops be processed in rotation?

D. Will waste collection and transportation be a problem?

1. What is the size and type of site where waste is generated, e.g. large centralized factory, village level, or cottage industry? (Factory generated wastes present less of a collection problem.)

2. Are the generating sites widely dispersed, particularly at the village scale?

3. Are transportation systems adequate for transporting the waste or waste derived products to processing and user sites? For example, molasses is largely wasted in African countries because transportation to shipping points for export is difficult and expensive.

4. Will residue spoilage due to tropical climate, mold formation, insect infestation, general unsanitary conditions, and other factors be a problem, particularly at the village scale? For example rice bran must be stabilized to avoid rancidity. Copra cake is unfit for human consumption because of unsanitary processing and tropical climate.

5. What steps are necessary to prevent spoilage? e.g. better copra drying, rice bran stabilization.

6. Are suitable village scale units available to accomplish D5?

7. Can waste be used directly or processed at or near the site of generation? For example, immediate feeding of wastes to local animals or of processed waste will alleviate collection, spoilage, and transportation problems.

8. Can such processing as in D7 be done at the village level?

E. Are there appropriate research and processing facilities and personnel for evaluating and implementing waste utilization?

1. Are government and industry responsive to innovation and change?

2. Adequacy and availability of?

   a. Trained scientists and engineers

   b. Laboratories for waste utilization research and development

   c. Equipment for waste handling and processing

3. How highly developed is the industrial and technology base of the country?

4. Is there business sector capability for marketing waste derived products?

5. Is there experience within the country with residue utilization? For example, tempeh is made in Indonesia by fermenting peanut, soy and coconut press cake, and vinegar and nata is made by fermentation of coconut water in the Philippines. Such established practices indicate awareness and experience in residue utilization and possible acceptance within the country of residue based products.

F. Are human foods derivable from the waste?

1. No - Consider usage for animal feed, growing algae or growing fish. (Reasons for no include toxicology and fiber content.)

2. Yes

   a. Are the products desirable from a nutritional or social viewpoint? For example, residue derived products such as rice bran oil, protein isolate, juices, and single cell protein are nutritious. Vinegar and alcoholic beverages have little nutritional value and the latter may not be a desirable product.

   b. Will the product be locally acceptable and marketable from the standpoints of cultural factors and willingness to try new products? If not, are there export possibilities, e.g. alcoholic beverages?

c. Will new product be economically competitive with or as acceptable as product which it is intended to replace? e.g. canned coconut milk vs. individual home produced milk in Philippines, Thailand, Indonesia.

d. Will higher technology and more stringent processing conditions be necessary for making a human food from the waste as opposed to an animal feed? Generally human products require stainless steel equipment and asceptic conditions, thereby making economics less favorable for human food products from residues.

G. What are the possibilities for waste usage as animal feed?

1. Are there feed shortages in country so as to favor waste utilization? e.g. Thailand is a feed exporter and is not short of feed.

2. What types of feed are needed, e.g. protein, carbohydrate, fiber?

3. What is the composition of the waste, e.g. protein, carbohydrate, etc? Can use of waste or waste derived product reduce feed imports? For example, palm oil sludge as a source of feed in Malaysia may reduce maize imports.

4. What animals can be fed on the waste itself or on derived products, e.g. chicken, pigs, cattle?

5. Are there adequate numbers of animals to use feed or is there too much waste available? For example, there is little cattle in Malaysia, but Malaysia is trying to increase the numbers. Also, there will be much more palm oil sludge available than there are pigs to feed on it.

6. Will there be cultural problems in using waste derived feed? For example, oil palm sludge is excellent hog feed, but because Malaysia is a Muslim country there are some limitations to this application.

7. Will there be willingness to try new feed supplies?

8. Can immediate, direct (wet) feeding of wastes be done? This will require proximity of animals and integration with a feed lot, and minimizes processing and transportation costs and requirements.

9. Is further processing of wastes necessary for purposes of storage, preservation, quality, and use?

a. Are there adequate fuel supplies to provide heat for dewatering (evaporation) and drying?

b. Can residues be used as fuel? For example bagasse is used as fuel in sugar mills and oil palm fibers are used in oil palm mills.

c. Are suitable field driers available for rural operations, e.g. copra driers?

d. Can non-evaporative concentration methods be used to minimize fuel requirements, e.g. reverse osmosis?

e. Can oil be extracted from residue, e.g. rice bran oil from rice bran?

f. Can valuable constituents of a residue be recovered by separation techniques such as extraction precipitation or adsorption? For example, protein isolate can be obtained from rice bran by alkaline extraction.

g. Can single cell protein (yeast or fungi) be produced from the waste by fermentation? If yes,

- Are supplemental nutrients necessary and available such as nitrogen, phosphorus and sugars?
- Is concentration necessary prior to fermentation?
- Are there fuel limitations if drying of product is necessary or desirable?
- Are secondary wastes generated? and if so,
  - † What is their environmental impact?
  - † How can they be used?

10. How does the cost of the feed produced from the waste compare to the cost of competing feeds currently in use? e.g. single cell protein vs. soy meal.

H. Can algae grown on wastes be used as feed?

1. Is wastewater of proper composition? e.g. biochemical oxygen demand should be less than 200.

2. Is this application suitable for wastewater remaining after other processing.

3. Are the requirements for mixing and harvesting too complex and costly, particularly for rural based agro-industry?

4. Would marketing of algae be a problem since feed producers are not used to handling it?

I. Can wastes or algae grown on wastes be used in fish ponds?

1. Would fish which could be grown be an acceptable food in the country, e.g. carp, catfish?

2. Is there local capability to operate fish ponds?

J. What are the technology requirements for waste utilization?

1. Can existing technology be used and is it available in the country?

2. Is technology transfer or obtaining the technology from the open literature possible?

3. Is pilot testing necessary in cases H1 and H2?

4. Is the appropriate utilization and processing technology developed to the point where they can be piloted or is further research needed?

5. Is technology suitable for rural agro-industry, i.e. simplicity?

Evaluation of the above factors should involve meeting with and visiting the facilities within the country of:

- Food processing industries and government and industry umbrella groups for a particular commodity, e.g. Federal Land Development Agency (FELDA)--palm oil in Malaysia, PHILSUGIN (Philippine Sugar Industry).

- Government environmental control organizations

- Government industrial ministries

- Scientists, engineers, universities and laboratories concerned with food production, processing, waste utilization and pollution control

- Agricultural and nutritional officers at USAID missions and embassies.

Evaluation of waste utilization possibilities in the Philippines and Indonesia exemplifies application of the above procedures. The Philippines was considered to be a suitable location for waste utilization for the following reasons:

- The National Water and Air Pollution Control Commission appears to be making a strong effort to control pollution.

- Food wastes of various types are available in central locations in relatively large quantities, e.g. coconut water from dessicated coconut plants, rejected bananas.

- There is some history and awareness of using wastes from food production and processing, e.g. current interest in protein isolate from rice bran for use in baby foods.

- There are suitable related facilities and resources including large well managed, modern food processing plants; large, active and financially secure food authorities, e.g. PhilCoa, PhilSugin; university and government research facilities related to food and wastes, e.g. University of Philippines at Los Banos and Diliman, Philippine Women's University and NIST.

Indonesia was not deemed suitable for AID sponsorship of a future study although a pilot study on use of production and processing wastes could have a significant impact in Indonesia. Large natural resources are available, there is a definite need to increase availability of food and feed, and from harvest to consumption, there is 20-30% wastage of food. Also the expertise which would be supplied by AID would be more essential here than for example in Malaysia. A great strength in Indonesia is that they have led the world in utilization of waste for conversion to human food by fermentation. The best example is the ontjom-bongkrek process by which soy, peanut or coconut press-cakes ordinarily fed to animals in the Western World, are converted through a fungal fermentation to a human quality protein-rich meat substitute. Despite these positive aspects however, a pilot project might be difficult to implement in Indonesia for reasons which follow:

- The present, major emphasis in Indonesia is on food production and jobs, and not environmental matters. In general, environmental awareness is lacking, and education is needed for nonenvironmentally destructive growth. The poor telephone and mail system, and cultural and political differences could cause difficulties in in implementation.

- The food industry in Indonesia is largely rural based and widely dispersed. This creates problems in the level of technology which can be used and transportation of wastes and finished products. Use of village level technology would be appropriate here. The government is trying to develop cattle areas in eastern Indonesia which will increase the need for feed and thus the potential for using feeds derived from wastes, e.g. palm oil wastes. However, because of transportation costs, it may still be cheaper to sell animal feed to Japan rather than using it in Indonesia. Indonesia, being a Muslim country, the same limitations on hogs as in Malaysia, also apply here.

- According to Dr. Sastrapradja of the Indonesian Institute of Sciences, the government would be interested in a pilot project if a fullscale operation would eventually create more jobs. Business interest in a pilot project would be based on future profitability and not the benefit of environmental control. Dr. Sastrapradja also pointed out the lack in Indonesia of scientific manpower, particularly engineers, to implement a food waste utilization pilot project.

M. FLEISCHMAN

MF/ad
9/16/77

Food And Feed From Food Wastes

and Agricultural Residues

Vol II.

A Survey Of Food Residues
And Agricultural Residues By Crop

BANANAS

Bananas are produced in most countries in the humid tropics, with Ecuador and the Philippines being the largest producers. In 1974, Columbia produced 0.8 metric tons, Guatemala 0.8, Ecuador 2.7 and Ivory Coast 0.172 (1). The bananas are produced principally for the export trade which has rigid standards for size and shape.

Bananas are cultivated, harvested, processed, packed, and shipped in much the same manner wherever they are grown. Banana wastes are currently generated at packing stations where the bananas are removed from the stalk, washed, treated and packed for shipment. The stalk is thrown into a trailer and the fruit is sorted into first, second, and rejected grades. Most of the rejected fruit is due to skin blemishes and being under or over size. Hence the rejected or wasted bananas are of fairly good quality. The reject bananas and stalks are trucked away to dumps where they are burned or allowed to rot, thereby causing bad odors. Some find their way into waterways in the Philippines, and reject bananas are of environmental concern in the Philippines (2).

The banana market is a sensitive market in terms of fruit quality and price. If bananas are not near perfect, they are not sold. The selection at the site is critical. If bananas are too expensive, then the quantity sold falls. In most of the world bananas are a luxury food and are purchased when the price is low. Early this year a banana tax was to be imposed in Panama on all expected fruit. This tax would substantially increase the price and, as a consequence, there may be even more waste bananas in Panama in the future (3).

Little is being done with waste bananas anywhere. Some rejects go

into manufacture of puree, banana chips, banana ketchup, glue, and for swine feed. The market for these uses is however limited. For example in Panama, the approximate production figures for Bocas del Toro and Puerto Armuelles are 15 x 10^6 boxes shipped from each location per year. Each box contains about 40 lbs. Therefore, the total shipment from Panama is 30 x 10^6 boxes or 1.2 x 10^9 lb banana/year. If one assumes a 30% wastage, there is 5.1 x 10^8 lb/yr of waste banana and only 20% of this total is used for puree, so that 4.1 x 10^8 lb/yr (2 x 10^5 gons/yr) are available as waste (3).

Depending upon the export market and time of year the fraction of fruit rejected at the packing station can be as low as 5-10% or as high as 30-50% of the current banana production. The quality standards change as demand for bananas rises and falls on the export market.

The waste green bananas are mostly water (74.8%) and starch (≈25%). Upon ripening, the starch is converted into sugars and the composition becomes glucose 4.8%, fructose 3.7% and sucrose 12.7%. Therefore, if a single plantation normally ships 50,000 tons/yr of fresh fruit (medium sized plantation) and has a 20% cull ratio, about 2500 tons/yr of starch (in waste fruit) would be generated. In Ecuador, at an average level of 20% waste of the total export there is approximately 0.27 million metric tons of waste/year amounting to 68 thousand metric tons of fermentable carbohydrate per year. At full value of the banana (5¢/kg) this carbohydrate would cost 20¢/kg (≈9C/lbm). As a waste, its value to any process is questionable but it is likely that an established process to utilize these bananas would create a price of around 1-2¢/kg. This would help insure year round availability of the substrate. At this price the carbohydrate cost would be around 4-8¢/kg (1-3¢/lbm) (1). A more detailed description in the form of a proposal is given for Ecuador later in this report. Some details of wastage

will now be given.

Tiller (4) reports that "vast quantity of bananas passes through the port of Guayaquil in Ecuador. In the past, a substantial portion of the bananas have been lost because of improper handling. Poor sanitary control has been a major factor. Generally, many of the bananas brought to the port of Guayaquil are not accepted for shipment. They are then sold on the local market at low prices. The excess bananas could be utilized as a raw material. The need for a steady supply would quickly bring the price up to a value comparable to those which are exported. However, there is a potential supply available if the appropriate processing could be developed."

Friesecke (5) reports that in 1953 in Ecuador "The amount of banana culled or exceeding export possibilities was estimated to be around 300'000 metric tons a year. As no facilities were available in Ecuador to process bananas for human nutrition, the only choice was to apply green bananas for feeding of cattle and pigs." His experiments are described later.

Larkins (6) reports that in Costa Rica "All banana growers have a production problem, a banana waste generated from undersize, rejected appearance, overripe and incorrect temperatures within the banana before shipment. This waste is, at present valueless and being almost pure carbohydrate has only proportiate value as feed even to pigs."

The Philippines produces bananas for export, principally to Hong Kong and Japan. The Japanese, however, will accept only the middle sections of the banana bunches, and they do not accept either the very large or the very small bananas. Thus, there are reportedly mountains of bananas in banana plantations all over the country without any commercial use. The majority of these surplus bananas are dumped in landfills and rivers, and are a major environmental concern in the Philippines. Reportedly, 15-50% of

the entire banana production is rejected and in Mindanao, a major banana producing region, 50 tons per day are wasted (7).

It is estimated that 40-50% of fruits and vegetables grown in Nigeria fail to reach the market due to rotting and over-ripening (8). Such materials include over-ripe banana (Musa Covendish). In summary the estimated quantity of waste bananas in selected countries is as follows:

	Metric tons per year	
Philippines	1×10^5	(9)
Panama	2×10^5	(3)
Ecuador	2.7×10^5	(1)

Current uses previously mentioned and potential uses of waste bananas, e.g. vinegar, alcohol, single cell protein, will be described. Reclaimation of nutritional value of waste bananas appears to be a viable development project (1) because

- Transportation and central gathering of waste bananas is already practiced.
- Bananas are produced year-round and waste generation is constant.
- Quantity of the waste material is sufficient to supply a plant of reasonable size.

Banana stems can be used for feed, wrapping, and compost, young leaves for wrapping, and dry leaves for compost. Banana peelings and stalk are unused.

I. Wastes Bananas as Animal Feed

There is limited direct feeding of waste bananas to swine and cattle in feed lots near the banana plantations. In Panama, possibly 1-2% go to pig farmers and only a very few feed lots in the Philippines use the waste bananas (10). Direct feeding to cattle has been unsuccessful. Protein must be added and DelMonte (11) had to mix the bananas with molases.

A study was made in Ecuador (5) of feeding green bananas to sheep and pigs, and ensiled bananas to ruminants. Ensiled bananas were used for the determinations of the feeding value in ruminants because in this form bananas may be easily blended with any given quantity of alfalfa or other roughages richer in protein, in order to produce a feed, the protein and energy contents of which approximately correspond to the nutrient requirements of ruminants.

"The results indicate that bananas are rather poor in protein. For pigs, however, they are of high energetic value and of high digestibility. Consequently, green bananas may be recommended as basic feed for fattening pigs together with 800-1000 grams daily per animal of a concentrate containing about 30 to 35 percent of crude protein."

"In ruminants the digestibility of the organic matter, and consequently the energy value, of green bananas is somewhat lower as compared to that in monogastric animals. This may be explained by the low contents of crude protein and crude fibre which probably do not permit adequate development and function of the microflora of the rumen. The energy value of ensiled green bananas is, however, still higher than that of maize silage. For ruminants, green bananas may be recommended as an energy supplement for animals on pasture; they may as well be ensiled together with 50% of green alfalfa in order to compensate for the low protein content of pure bananas. As indicated by an additional experiment, green bananas, be it in a pure form or blended with alfalfa, should always be ensiled with 1.5% of molasses added in order to facilitate the fermentation process."

"The vitamin and mineral contents of bananas were not investigated. The low fat content of the material would however suggest that bananas are by no means rich sources of fat-soluble vitamins A, D, and E. Hence care

should be taken to provide a suitable supplement."

In summary, green bananas are a feed poor in digestible protein, but of considerable energy value. Friesecke (5) also recommends that, to avoid high transportation costs due to the high moisture content of fresh bananas, drying be carried out to produce a meal.

Mention has been made of a United Fruit pilot project in Honduras where catfish are reared in confinement and a part of their "feed" is banana waste (6).

II. Banana Flour

Banana flour could supplement the diet and reduce wheat imports to the Philippines. There have been pasts efforts to make and market banana flour in the Philippines, and because of the large volumes of reject bananas interest is again current.

Dr. Engel, USAID, in a meeting with the third site visit team, recalled that some time ago, a program was started for producing banana flour by running the bananas through a splitter knife and squeezing the pulp between two perforated rolls. The product was not satisfactory for food because it was too bitter.

Banana meat has been dehydrated, pulverized, and solvent-extracted with hexane in small scale at the National Institute of Science and Technology (NIST) and at A. Soriano & Co. Espiritu has installed a plant in Mindanao to produce banana flour for export to Germany. This plant also was not successful.

Dr. Manolo Santos (12) was producing banana flour in a 9 ton/day pilot plant in Davao del Sur, Philippines, using green Cavendish bananas that fail to meet the rigid standards of the export trade for size and shape. In the process the bananas are macerated, dried, and ground into a light brown flour. Stainless steel equipment must be used because ordinary steel will cause a purplish discoloration when it comes in contact with banana tissue (13). Green bananas are used for a starch product and ripe bananas for a sweet product. Ten kilos of fresh bananas at 80 percent moisture yield 1 kilo of banana flour at 10 per-

cent moisture. The flour contains 4.6% protein, 4.1% ash, and 1.7% fat. It has a 3-6 month shelf life, and in 1975 was priced at .73 the price of wheat flour (14). It is a good extender for imported wheat flour or a calorie source for a blended baby food. Based on the 1975 level of banana exports, it is estimated that the total potential production would be limited to 20 tons/day.

This project has ceased due to marketing and financial problems. Bread made from this flour becomes brown and is therefore generally not acceptable to Filipinos. The AIChE AID LIFE third site visit team (15) reported that Saginco was constructing a 1 ton/day banana flour pilot plant in Mindanao to process Cavendish bananas that had been culled before export. The bananas would be peeled to yield half skin and half pulp, and the pulp would be flash-dried to 20% its original weight and further ground to powder.

Mr. Borromeo and Mr. Ocampo, Philippines, want to go into production of banana flour, either from Cavendish or Saba rejects, whichever is cheaper. They thought that they could get sufficient reject Cavendish bananas for 60 ton/month of powder and might get as much as 120 ton/month. One kg of powder requires 45 bananas. The Cavendish type is sweeter and has more flavor when ripe than the Saba, which is essentially a cooking banana. While the former would be converted to powder when slightly ripe, the latter would be used when still green.

The process which they proposed to use consisted in peeling the bananas by hand, slicing them, and spreading them over a tray supported in a hot air oven and drying. The dried chips would then be ground for banana meal. Two of their associates invented the process and have taken out a Philippine patent.

The product made from whole bananas was rather dark, but a product made from banana pulp with the seeds removed before drying was somewhat lighter in color. The drying is to be done with indirect heat using rice hulls or possibly even kerosene to supply the heat.

Messrs. Borromeo and Ocampo were as interested in technical advice as AID support. It did not appear at the time of the 3rd team's visit that they had the necessary details of a workable process established. Advice was given to conduct considerably more experimental work on production, and also to investigate the possible banana supply as well as the outlets for banana flour more fully before substantial amounts of money were committed (15).

For production of banana flour, Dr. del Rosario, Dept. of Food Science and Technology, UP Los Banos recommended Saba bananas, which he would boil to prevent blackening, slice, dry, and grind the chips for flour. 15% of such banana flour could be added to bread flour without a major alteration of the taste, but the volume of the loaf is reduced by 15 to 20%.

Roberts (13) suggests that the Santos process would seem to be applicable to the widely grown (but not exported) saba banana, which is being used in increasing amounts in the production of catsup. It would appear that the design and testing of a village level process for converting saba bananas to flour, probably built around a low cost, low capacity flash dryer, would make a significant contribution to the Philippine Nutrition program by providing a less costly calorie source than rice for a supplemental baby food.

Dr. Santos has also combined banana flour 50:50 wt/wt with a coconut flour produced from properly handled defatted copra, to make a flour called "Banco," with a protein content of about 11-12%. This can be used to replace up to 5 or 10% of the wheat flour for use in bread and bakery products. Since all wheat is imported into the Philippines, this would appear to be a worthwhile objective from the Philippine viewpoint. Neither coconut or banana should be tasted in bread using 10-15 % Banco and wheat flour.

There are problems however with Banco. The flour millers want assurance from the Grain Authority that the quality of the bread would not be impaired. When the coconut fiber dries, Dr. del Rosario said it becomes gritty and can be

detected at concentrations as low as 5%. In addition, the cost of coconut flour might be higher than wheat flour. Blue Bar estimates that coconut flour will cost 3/kg, while wheat flour sells for 2/kg.

The addition of Banco to wheat flour could raise strong opposition. The Government has imported wheat at $114/ton and sold it to the millers for $240/ton, who in turn make a good profit in milling it. It is very doubtful if Banco would be adopted unless there is a Government ruling that it must be incorporated into wheat flour. Dr. del Rosario told the third site visit team that several years ago a law was passed to require the wheat millers to add 10% cassava starch to wheat flour. The law was poorly written and the millers could not be forced to comply. If Banco is added there is likely to be resistance. Another possibility is to add rice flour to wheat flour, as the protein content of rice flour is 8 to 9%. The color is better than wheat flour, and it would not have a pronounced taste. The rice crop in the Philippines is large enough that rice flour could be available.

Dr. Solon of the Philippines National Nutrition Council, while interested in the above discussed products cautioned that their acceptability would be a problem, in that taste was very important. He noted that not only was the Philippine diet low in calories and protein, but it was also deficient in oil. An interesting fact is that oil produced in Mindanao is refined in Luzon and then shipped back to Mindanao.

III. Other Uses of Banana Wastes

Puree, banana chips, and banana catsup are made from bananas in the Philippines and elsewhere. However the market for these products is limited and does not utilize sufficient quantities of the excess bananas. For example at Bocas del Toro in Panama approximately 40% of the rejected fruit is taken to a puree plant. However, even with the use of only a fraction of the waste bananas, it is possible to meet the current puree

market (3). The starch from green bananas is used in making glue and as a binder with banana fibers to make rope. Again, these uses are limited.

IV. Fermentation of Reject Bananas

Because of the relatively high saccharide content, bananas can be fermented to produce vinegar, alcohol, alcoholic beverages and single cell protein. In work being done in Nigeria on production of alcoholic beverages from bananas (8), "the total reducing sugars in banana was found to be 11.2%. The banana pulp contains starch of about 60-66%. In both skin and pulp, an appreciable increase in the amount of total sugars during ripening was noted. The starch content of the peel and pulp fell considerably during ripening."

In the Nigerian study (8), "Brewer's Yeast (Saccharomyces ellipsodens) was successfully used to ferment bananas to produce alcoholic beverages. Comparisons were made by fermenting with other types of yeasts such as baker's yeasts and palm wine yeasts. Analysis of the alcohol showed the product to be suitable for human consumption. Work is in progress to produce the alcohol on a large scale using the 'FIIRO' Still, a simple distillation apparatus designed by the Institute of Industrial Research."

In the Philippines, the National Cottage Industries is encouraging the production of vinegar from banana pulp (7). With regards to making wine, in addition to the questionable nutritional value, there would probably be marketing difficulties since the Filipinos are not generally wine drinkers. In a Philippine National Science Development Board project, banana meat and peel was fermented with added phosphate to obtain single cell protein or alcohol (5). Both ripe and unripe Cavendish bananas were used for the studies on banana fermentation. The whole bananas were cut up in fine pieces and mixed in a blender with hot water in a ratio of [illegible]

mixture was filtered and excess water discarded. The remainder was a semi-solid slurry which was inoculated with Aspergillus fusarium, or yeast, and stirred sufficiently to induce a vortex. This required 10 rpm at the beginning of the fermentation but higher rates later as the mixture became mushy and then free-flowing. Water extracts and hydrolysates were also fermented. The yeasts have no amyolytric activity, and therefore was less effective on unhydrolyzed unripe bananas. Though the protein contents of the yeasts were higher than those of the filamentous fungi, the latter were more easily handled and recovered. The resulting yeast from the production of SCP was 48-52% protein on a dry basis, but it did not appear feasible to make either product. The project has been suspended since Prof. Paca left NSDB and Prof. Ernesto J. del Rosario of UP Los Banos, who was also involved, went on sabbatical to Australia. The Malaysian Agricultural Research and Development Institute is also doing laboratory studies on fermentation of bananas to produce wine and vinegar (16).

In some parts of Africa bananas are being fermented into "banana beer" (3). In this process the mashed bananas are slurried and fermented in a batch culture. This simple fermentation only takes 12 hours. The liquid is drunk along with the yeast used for fermentation and has significant nutritional value. The problem with this product is that it must be chilled or consumed in a short time. The ease with which this crude, anaerobic fermentation is carried out suggests that ananaerobic, low pH fermentation of bananas by simple yeast strains could be practical for the production of an SCP of acceptable nutritional quality for animal feed . Cooney and Dunlap proposed a process for doing this (3).

In this process whole bananas would be charged to a macerating mixer where skin and pulp (and possibly stalk) is chopped and mashed. This puree would be diluted with water (or recycled liquid) containing necessary inorganic nutrients. The resulting slurry would be inoculated with yeast and the fermentation would run

as a batch culture. To minimize contamination the fermentation would be run at low pH (4-4.5), and growth rate and pH would be controlled by addition of anhydrous ammonia or urea.

The SCP could be concentrated by filtration possibly followed by partial drying, after which point it could be used for animal feed. A suitable ration using the SCP would be

10% SCP

20% molasses

3% nutrient salts

57% fiber

In 1972, a group in Costa Rica (6) had planned to run pilot studies on production of single cell protein from bananas to develop a high protein human and animal feed. In response to a request for information, the League for International Food Education (17) made the following suggestions: "A nitrogen source in the form of urea or ammonium salt would need to be supplied in order for the yeast to make protein. Most likely other yeast nutrients, such as phosphate, would also need to be supplied. The fermented mash would probably have to be dried in order to have any reasonable keeping quality unless a livestock project could be set up close to the fermentation installation keeping pace with the output. Even then, the mash would probably need to be concentrated in order not to have an excessively wet feed."

Centro Internacional de Agricultura Tropical (CIAT) in Cali, Columbia is studying solid state fermentation of cassava to produce single cell protein. The second site visit team for the AIChE AID/LIFE project has recommended USAID involvement in the development and implementation of a process to reclaim nutritional value from waste bananas using the CIAT technology (1).

V. Peelings

Mr. Santos of Saginco in the Philippines would like to ferment the waste banana peel with the coconut water to obtain single cell protein. The peels when green have most of the carbohydrate in the form of starch; this is converted sugars as the peels ripen. According to a 1950 Interscience book by von Loesch, the composition of the ripe peel is the following:

H_2O	88.2%	On a dry basis:	
Reducing sugar	5.44%	CaO	0.16-0.18%
Sucrose	1.05	P	0.347-0.377
Protein	0.08	Fe	--
Starch	0.84	Na_2O	0.291-0.395
Pectin	1.14	K	6.63-7.73
Fat	0.53		
Fiber	1.28		
Ash	1.33		

Dr. Engel, the USAID nutrition officer in the Philippines had strong doubts about any program to make single cell protein from banana peels, as after fermentation there would probably be a very viscous mixture difficult to process further. Both in this meeting with the third visit team (15), and in a following letter Dr. Engel pointed out that the peels are high in tannin, which might suppress appetite, and quite bitter. He suggested conducting feed with both ruminants and non-ruminants before pilot plant operations were considered.

VI. Pilot Project Possibilities

As indicated earlier, there are large quantities of waste bananas in

most of the banana producing countries. This waste has a significant environmental impact which is of concern in the Philippines. The loss of nutritional value represented by the wasted bananas is also of considerable concern (18). Current uses of the bananas rejected for export (puree, ketchup, flour, swine feed) use up but little of the available supply.

Production of single cell protein by fermentation of the wasted bananas for animal feed purposes appears to be a viable possibility, and a pilot study is recommended. Much research on single cell protein production has been done, some using bananas as a substrate. On the pilot scale, Dr. Worgan of Weybridge, England (19) is negotiating to start a pilot study in Columbia. Factors which support the recommendation for a SCP from bananas pilot study are

- Environmental impact of waste bananas
- Need for the SCP thus produced in the banana growing countries as animal feed
- Bananas are produced year round and waste generation is constant
- There is no collection problem since central gathering of waste bananas is already practised
- Quantity of the waste is sufficient to supply full size SCP plants.

Of the countries visited for the AIChE AID/LIFE project, Ecuador and the Philippines appear to be suitable locations for a pilot study on utilization of waste bananas. A proposal for such a study in Ecuador is described in the next section. Some features pertinent to the Philippines will now be given.

There is environmental concern in the Philippines over the waste bananas (7). In Mindanao, the area where the banana plantations are located, there is a large cattle and pig industry which could use feed containing

single cell protein made from wasted bananas. San Miguel Corporation, one of the largest producers of animal feed in the Philippines, believes that a pilot study on SCP from bananas "would be of value to the Philippines if successfully completed. The country needs locally produced, low-priced, high-protein feed ingredients to replace the imported soybean oil meal, fish meal and meat meal now being used. Importations in 1975 amounted to 40,615 MT of soybean oil meal ($0.204/kg, CIF; total value of $8.27 million) and 55,388 MT of meat meal ($0.214/kg; $11.89 million)" (20).

According to William McCluskey (21), the Agricultural Research Adviser for USAID, "a yeast such as torulopsis utilus (Torula Yeast) would fit into the overall feed scheme, primarily as a supplement, as it does in the U.S. unless a lower cost product could be achieved. However, the liberal feeding of ruminants is rarely practiced in the Philippines and a large percentage of the swine are not fed on complete mixed feeds. Hence, the introduction of a new ingredient would likely be faced with more resistance than in the U.S. but there are relatively sophisticated mills that would likely utilize yeast at higher levels if priced attractively. The local poultry feeds are based on imported soybean meal and fishmeal for protein supplementation so an attractively priced protein alternative should be acceptable."

Correspondence with Del Monte in the Philippines (10) further indicates the potential for SCP from bananas in the Philippines. "Right now, very little is done in the Philippines with green banana waste. Only very few feedlots in close vicinity to banana plantations are using now and then small portion of banana waste. The usefulness, therefore, is difficult to assess. By talking to our veterinarians, responsible for our large feedlot operation, they were expressing some interest in SCP for cattle feed but would see more profound use for it in hog and poultry operations. To a certain

extent, presently used soybean meal and urea may be replaceable by SCP but needs, though, experimentation and confirmation. To my knowledge the only SCP source now in the country is yeast but in limited supply from the only brewery in the country, San Miguel Corp. with locations only in Manila and Cebu. There are no limitations in the country which might restrict the use of banana based SCP or other banana based products for feed. As long as good performance of SCP is proven to livestock operations, there should certainly be no problem of acceptability."

Competent technical people for a pilot study are available in the Philippines. For example Dr. Del Rosario of U.P., Los Banos (22) is currently doing laboratory studies on banana wastes and others are studying production of single cell protein (23). Castle and Cooke (9) is willing to supply bananas for a pilot study and San Miguel is willing to assist in the evaluation of the SCP as feed ingredients through their feed plant.

REFERENCES

1. Barnett, Stanley; Nystrom, John; Dunlap, Charles, Trip Report, AIChE-AID/LIFE Survey Team II, Oct. 23-Nov. 17, 1976.

2. Engr. Garcia, Executive Office, National Science Development Board, National Pollution Control Commission, Manila, Philippines.

3. Cooney, C. L., Dunlap, C. E., "Final Trip Report on a Visit to Panama to Survey the Utilization of Agricultural Waste for Animal Feed", March 17-31, 1974, Department of State, AID, Office of Nutrition. (MIT Inter. Nutrition Planning Papers/75-1 C75-7, March 1975)

4. Frank M. Tiller, Professor, Department of Chemical Engineering, University of Houston, Houston, TX 77004.

5. H. Friesecke, America Saavedra, M. A. Vinueza and M. Tipan, Animal Nutrition Laboratory, Central University, Quito, Ecuador. ("Feeding Value of Green Bananas for Animals")

6. Maynard J. Larkins, Investor Service Corp., S.A., Apartado 6439, San Jose, Costa Rica.

7. Fleischman, M., Steinkraus, K. H., Meade, R., AIChE-AID/LIFE Project Report of First Site Visit, July 27-August 21, 1976.

8. A. B. Oniwinde, Federal Institute of Industrial Research, Oshodi, Private Mail Bag 1023, Ikeja Airport, Lagos State, Nigeria. (Alcoholic Beverages from Banana, Ref. No. 670/2.20/18)

9. Dr. Ray Morey, Castle & Cooke Foods, 50 California Street, San Francisco, CA 94111. (Phone: 415-986-3000) (Banana plantation in Philippines)

10. Dr. Wilfried H. Schnitzler, Director, Research & Development, Philippine Packing Corp (Del Monte), P.O. Box 1833, Manila Philippines.

11. Mr. Loeb, Del Monte Banana Co., P.O. Box 01140, Miami FL. (Phone: 305-371-8473)

12. Manolo M. Santos, President, Saginco, P.O. Box 257, Greenhills Post Office, Rizal, Philippines. (Coconut and banana flour)

13. N. W. Simmonds, "Bananas". Source Unknown.

14. Roberts, H. J., "Philippine Banana Flour". (1975)

15. 3rd Site Visit, AIChE AID/LIFE Project.

16. Ms. Zahara Merican, Malaysian Agricultural Research and Development Institute (MARDI), P.O. Box 208, Sungei Besi, Serdang, Selangor, Malaysia.

17. Samuel Weisberg, League for International Food Education. (Correspondence with Maynard J. Larkins, Investor Service Corp., S.A., Costa Rica, June 15, 1972)

18. "Residue Utilization - Management of Agricultural and Agro-Industrial Wastes", p. 36, Report of the UNEP/FAO Seminar on Residue Utilization-Management of Agricultural and Agro-Industrial Wastes, Rome, 18-21 January 1977.

19. Dr. Jeffrey Worgan, Natl. College of Food Technology, Weybridge, Waycross, England.

20. P. O. Juliano, Manager, Research, San Miguel Corporation, 6766 Ayala Avenue, Makati Rizal P.O. Box 271, Manila, Philippines, Cable Address "Samiguel" Manila. (Phone: 88-20-11)

21. William H. McCluskey, Agric. Res. Advisor, USAID/Philippines, APO San Francisco, CA 96528.

22. Dr. Ernesto del Rosario, Department of Chemistry, University of the Philippines at Los Banos College, Laguna.

23. Dr. Quintin Kintanar, Biological Research Center, National Institute of Science and Technology, Herran Street, Manila.

Additional Resources

Centro Internacional de Agricultura Tropical (CIAT), Cali, Columbis, S.A. (SCP - cassava fermentation)

Dr. Charles L. Cooney, Dept. of Nutrition & Food Science, Mass. Instit. of Technology; Cambridge, MA 02139.

Mr. Paul Dominguez, Banana Export Industries Foundn., Davao Light & Power Co., Poinciana Reyes, Davao City, Philippines.

Dr. Charles Dunlap, Dept. of Chemical Engineering, University of Missouri, Columbia, MO, USA.

Guayaquil, Ecuador, S.A., Escuela Superior Politechnica del Litoral (ESPOL). (Fermentation of waste bananas)

Dr. Hugh Freebain, Biology Department, University of Houston, Houston, TX 77004.

ITIPAT (Institute for Tropical Prods. Develop.), B.P. 8881, Abidjan, Ivory Coast. (Alcohol from bananas)

E. R. Mendoza, Department of Agricultural Engineering, Univ. of the Philippines at Los Banos, College of Agriculture, College, Laguna, Philippines.

Appendix

Recommended Pr

Banana Fermentation - Ecuador

A. Description of Situation and Residue of Interest

1. Quantity

Ecuador is the world's largest producer of bananas. Total production of fresh fruit in the country has been about 2.1 x 10^6 T.M. (metric tons) annually for the past twelve years. About 1.3 x10^6 T.M. are exported per year and 200,000 - 300,000 T.M./yr. are consumed within the country leaving about 300,000 - 600,000 T.M./yr. as waste.

In 1975, the total production of bananas was 2.1 x 10^6 metric tons, including both Cavendish and Gros Michel. The total land area was 87,000 hectares giving an average yield of 16 ton/acre. A summary of annual production data are presented in the following table. The general trend over the last ten years is to decrease the total acerage planted, however, the total production has continued to increase. This is a consequence of replacing the Gros Michel with the Cavendish variety of banana. In general the Cavendish will yield annually 32 metric ton/hect. whereas the Gros Michel only yields 10 metric ton/hect.

Unlike some major banana producing countries, the production in Ecuador is carried out by a large number of small producers. The average plantation size is 37 hectares; 74% of all banana production comes from plantations of less than 100 hectares. Only 5.3% of the production comes from plantations bigger than 500 hectares.

Banana Production in Ecuador Listed by Region for 1975

Zone	Area Planted (Hectares) Gros-Michel	Cavendish	Total	No. of Producers
North	7,190	280	7,420	216
Central	26,410	4,100	30,510	651
Sub Central	330	4,820	5,150	72
Oriental		17,900	17,900	352
South		25,200	25,200	1,041
Occidental		860	860	30
TOTALS	33,930	53,160	87,090	2,362

Source: Report on 1975 Banana Production, from Ministry of Agriculture, Ecuador.

Banana production and exportation statistics for Ecuador for the past 20 years have been compiled by the Ecuadorean Ministry of Agriculture and are shown in the following table.

Production and Exportation of Gros Michel and

Cavendish Bananas in Ecuador

AÑOS	HECTAREAS			EXPORTACION POR AÑO			
	GROS MICHEL	CAVENDISH	TOTAL	TON. MET.	CAJAS	CAJITAS	RACIMOS
1957	610	---	610	858.512	---	---	26'412.209
1958	34.141	---	34.141	927.880	---	---	28'952.721
1959	53.188	---	53.188	1'132.311	---	---	34'771.456
1960	79.353	---	79.353	1'177.602	29.096	---	35'889.499
1961	101.879		101.879	1'075,577	135.903	---	32'906.610
1962	91.456	---	91.456	1'128.366	636.194	---	34'379.960
1963	98.000	---	98.000	1'349.104	7'654.168	---	38'391.263
1964	128.291	---	128.291	1'382.658	28'811.658	1'317.993	26'673.648
1965	144.088	---	144.088	1'199.656	29'955.188	37'584.691	5'456.541
1966	163.772	---	163.772	1'264.801	27'204.408	55'626.954	2'313.585
1967	146.233	13.995	160.228	1'262.791	26'198.495	59'716.302	1'403.847
1968	131.898	24.978	156.876	1.251.282	23'211.169	65'604.165	747.245
1969	108.280	39.249	147.529	1'189.625	22'518.585	63'035.614	275.630
1970	74.045	50.200	124.245	1'364.070	25'167.783	70'490.717	147.560
1971	59.665	54.921	114.586	1'350.441	34'148.114	56'350.620	105.082
1972	47.067	53.927	100.994	1'377.383	33'849.176	58'447.890	24.483
1973	42.399	50.107	92.506	1'369.873	40'610.006	46'175.654	15.414
1974	35.545,5	54.955,5	90.501	1'357.135	55'644.578	23'305.566	1.901
1975	33.464,5	53.938,5	87.403	1'362.352	45'986.096	34'015.924	2.730
1976	23.432	62.472,5	85.904,5				

The plantation that we visited in Machala was typical for Ecuador. It was 49 hectares with an average of 1000 trees/acre. There is generally a packing station for every 10,000 trees in an operation of this size. Most of the wastage in banana production is sorted out at the station and typically represents 10-30% of the total.

The total world production of bananas is estimated to be about 28 x 10^6 ton with only 20% commercialized. Thus, Ecuador's production is a substantial portion of the total.

Costs of Banana Production

The detailed cost for production of Cavendish banana in 1975 in the South zone are presented below:

Item	Cost (sucres/hect.)	% of total
Seeding	350	2
Culturing	12,200	56
Indirect Cost	9,400	42
Total	21,950	100

Thus the net production cost is 22 x 10^3 s/hect. If there are 30 ton/hect., then the cost is 733 s/ton or 0.7s/Kg (at 3.7¢/s this is 2.6¢/Kg or 1.2¢/lb). Thus banana without a stalk will sell for 500-1000 s/ton depending on the market. In early 1975 the price was 800 s/ton at the dock. Waste bananas will sell for as little as 20-30 s/ton for small lots at the packing station or 250-300 s/ton in larger quantities delivered at a site within 50 Km distance. Much disagreement exists on the cost of transportation by truck, but about 2-2.5¢/ton/km seems reasonable for good roads with 6-ton trucks.

Composition of Banana

The banana tree is characterized by four parts and their typical weight fractions are:

Component	% of Total Weight
Fruit	17
Leaves	5
Stem	75
Fruit Stalk	3

Currently in banana harvesting only the fruit and stalk leave the field, the bulk of the tree is cut and left to rot in the field.

The composition of the fruit is as shown below. It is important to note that 82% of the dry matter is fermentable carbohydrate. In green bananas this is mainly starch whereas in ripe bananas the starch has been hydrolyzed. The protein content (Nx6.25) is about 4% of the dry weight.

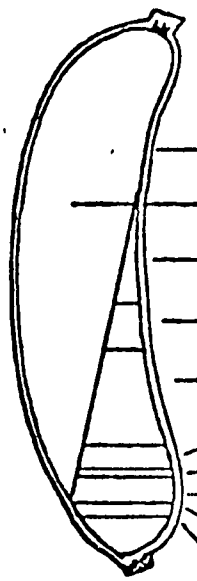

COMPOSICION APROXIMADA DE UN BANANO MADURO

Valor en calorías: 88 por 100 grms. de pulpa.

Envoltura natural a prueba de bacterias		
Humedad		74. 8 o/
Dextrosa	4. 8 o/o	Azúcares totales 21. 2 o/
Levulosa	3. 7 o/o	
Sucrosa	12. 7 o/o	
Almidón		1. 2 o/o
Fibra cruda		6 "
Proteína (Nx6.25)		1. 2 "
Grasa		. 2 "
Cenizas		. 8 "
		100. 0 o/o

VITAMINAS (Por 100 grms.)

A	430 U.I.
Tiamina (B1)	.04 Mg.
Riboflavina (B2 o G)	.05 "
Niacina (ácido nicotínico)	. 7 "
Acido Ascórbico (C)	10 "
Piridoxina (B6)	.52 "

MINERALES (Mlgrms. por 100 grms.)

Sodio	006-415	Hierro	. 6
Potasio	300-450	Fósforo	28. 0
Calcio	8. 0	Azúfre	13. 0
Magnesio	31. 0-4 2.0	Cloro	78-125
Manganeso	.04-. 32	Yodo	.02
Cobre	.16-. 21	Zinc	.28

2. Availability

Banana wastes are currently generated at packing stations where the bananas are removed from the stalk, washed, treated and packed for shipment. Presently this waste is trucked away from the plantations and allowed to rot or is burned in large dumping areas. The total waste tonnage varies according to the world market demand for bananas and can be as low as 5-10% or as high as 30-50% of the current banana production. The waste green bananas are mostly water (74.8%) and starch (≈25%). Upon ripening, the starch is converted into sugars and the composition becomes glucose 4.8%, fructose 3.7% and sucrose 12.7%. At an average level of 20% waste of the total export there is approximately 0.27 million metric tons of waste/year amounting to 68 thousand metric tons of fermentable carbohydrate per year. At full value of the banana (5¢/kg) this carbohydrate would cost 20¢/kg (≈9C/lbm). As a waste, its value to any process is questionable but it is likely that an established process to utilize these bananas would create a price of around 1-2¢/kg. This would help insure year round availability of the substrate. At this price the carbohydrate cost would be around 4-8¢/kg (1-3¢/lbm).

3. Geography of Region

Bananas are grown in Ecaudor in the flat lowlands of the western sea coast known as the "Litoral". The plantations are generally within easy reach of the major natural harbors on the Pacific Coast, therefore, product could be moved over existing transportation systems.

B. Existing Applicable Technology

Bananas are attractive as a raw material for SCP because of their high content of fermentable carbohydrates. In the green banana, starch is the primary form of carbohydrate whereas in the ripe banana much of the starch is hydrolyzed to low molecular weight sugar. As a consequence the fermentation technology for the utilization of green and ripe bananas is different. We have outlined below four fermentation processes which are suitable for starch and/or sugar based processes.

Possible Single-Cell Protein Processes

During the past decade and a half, a wide variety of SCP processes have been developed. Because of the variability of raw material supply and differing product needs, there is no one SCP process that is suitable for all situations. Four possible processes for use with bananas are presented here.

Symba Process

The Symba process was developed and is currently in use in Sweden by the Swedish Sugar Company to produce SCP from starch waste. There are two microorganisms that exist symbiotically in a continuous fermentor. These are on *Endomycopsis* species which is able to hydrolyze starch and *Candida utilis* which can use the starch hydrolysis products. This process is designed for starch based raw materials and would be expected to work quite well with green banana starch. Although both organisms exist in the fermentor simultaneously, 90% of the total mass is *C. utilis* which is an acceptable food yeast. A description of the process is provided by the attached figure that is taken from a booklet prepared by Chemap AG, Mannedorf, Switzerland.

Pekilo Process

The Pekilo process for SCP production was developed in Finland. It was designed to be used with sulfite waste liquor from the paper industry. The United Paper Mills, Ltd., in Finland have built a commercial plant around this process.

The organism is a microfungi Pekilomyces species and grows in a mycelium form. The substrate, sulfite waste, is made up of mixtures of sugars. It is not clear whether the process could be used with starch material or if it would be necessary to first hydrolyze the starch.

A schematic flow sheet of the process is presented below. This figure is taken from the paper by Romantschuk in Single-Cell Protein II by Tannenbaum and Wang. The SCP product has been tested by use in animal feeds. If the process could be adopted to the use of banana starch or starch hydrolyzates, it might be suitable for the banana project. The major disadvantage of this type of process, however, is that it is technology intensive and requires skilled labor for operation and maintenance.

Yeast Production from Molasses

One of the oldest industrial fermentation processes is the production of yeast from molasses. It is relevant to briefly describe this process here since an analogous approch could be tried with banana starch (if the organism has amylase activity) or starch hyrolyzates.

The most widely utilized organism in this process is Saccharomyces cerevesiae which is ordinary Baker's yeast. However, Saccharomyces Fragilis and Candida utilis have also been used. All three of these organisms are acceptable as food yeast. The temperature for growth varies from 25-35C; the pH optimum is in the region of 5. In all cases the crude protein content is about 50% of the dry cell mass.

Symba Process – example 'Felix' Plant, Sweden

Substrate concentration	3% D.S. (starch)
BOD_5 Entry	20 000 mg/l
BOD_5 Exit	2 500 mg/l
Purification effect	85–90%
Liquid dilution rate	0,1 (approx. 10 hours residence time)
Cell production	1,05 kg/m³/h D.S.
Protein content of D.S.	47%
Yield of D.S.	40–50% of the entry (according to substrate)
Microorganisms	Candida-Yeast + Endomycopsis fibuliger
nt 300 m³ produces	Approx. 300–400 kg Yeast D.S./h

The feed value of Symba Yeast has been evaluated in vast feeding experiments on different types of animals. At the Swedish University of Agriculture, pigs, chicken and calves have been fed for long periods of time on feed with a substantial part of the protein made up of Symba Yeast protein.

In rat-feeding experiment with Symba Yeast +0.1% Methionine, the NER-value was comparable to that of Casein. The chicken were fed Symba Yeast in feed mixtures, with 20% protein, of which one third came from Symba Yeast. The chicken grew excellently and were in normal health. No adverse effects were recorded.

In the feeding experiments with newly born calves (and those up to 10 weeks old), the Symba Yeast replaced dried skimmed milk in the feed up to 40%. The calves adopted the feed very well and showed better than normal growth.

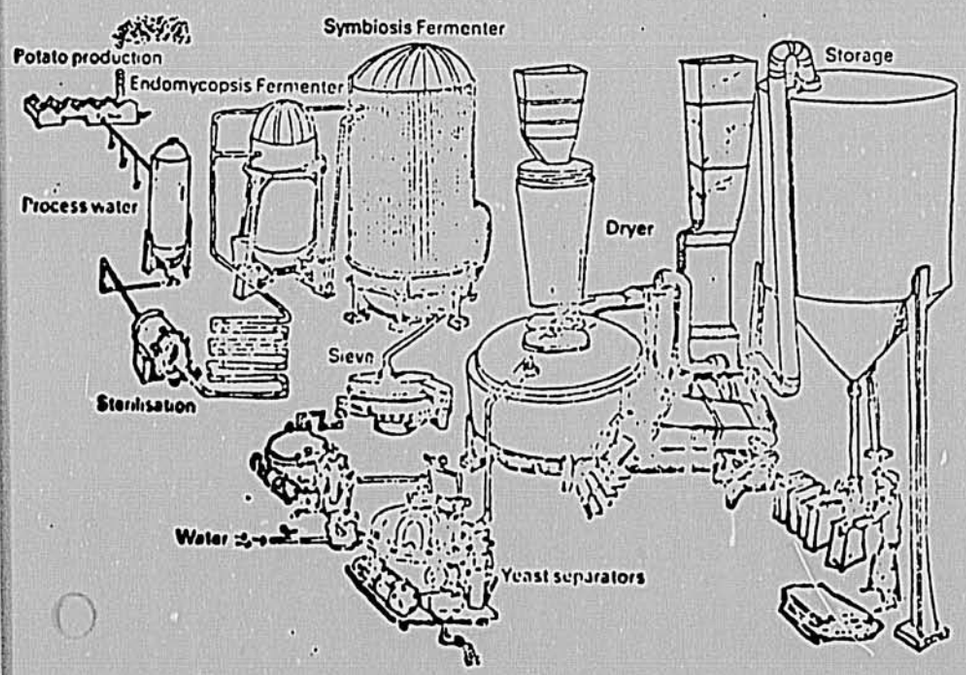

Description of Process and Equipment

Step 1

The waste water from the potato plant containing the starch or in the case of Manioc, the starch slurries, are fed through a heat exchanger and are brought up to sterilizing temperature by means of steam injection. The thus sterilized substrate is cooled down in another heat exchanger and the heat re-utilized for pre-heating the next following flow of unsterilized substrate.

Step 2

Sterilized substrate is fed into two fermenters: one smaller unit to receive the endomycopsis inoculum and the larger one to receive the converted starch solution from the first fermenter, plus the inoculum of the Candida utilis. The inocula for both fermenters are prepared in a prior pilot plant-sized installation in the classical manner.

The fermentation now proceeds on a continuous basis with the endomycopsis culture being fed continuously into the larger Candida fermenter.

Step 3

The harvest stream from the large fermenter is passed through vibrascreening and hydrocycloning equipment and is subsequently put through centrifuges on several types of dryers, each one to be selected according to the heat media and the type of end product desired. Spray driers, roller driers and ball driers have all been operated on this process on a large scale and all are found to be acceptable. The dried material is subsequently sifted and bagged or else stored in bulk.

The PEKILO Process: Protein From Spent Sulfite Liquor

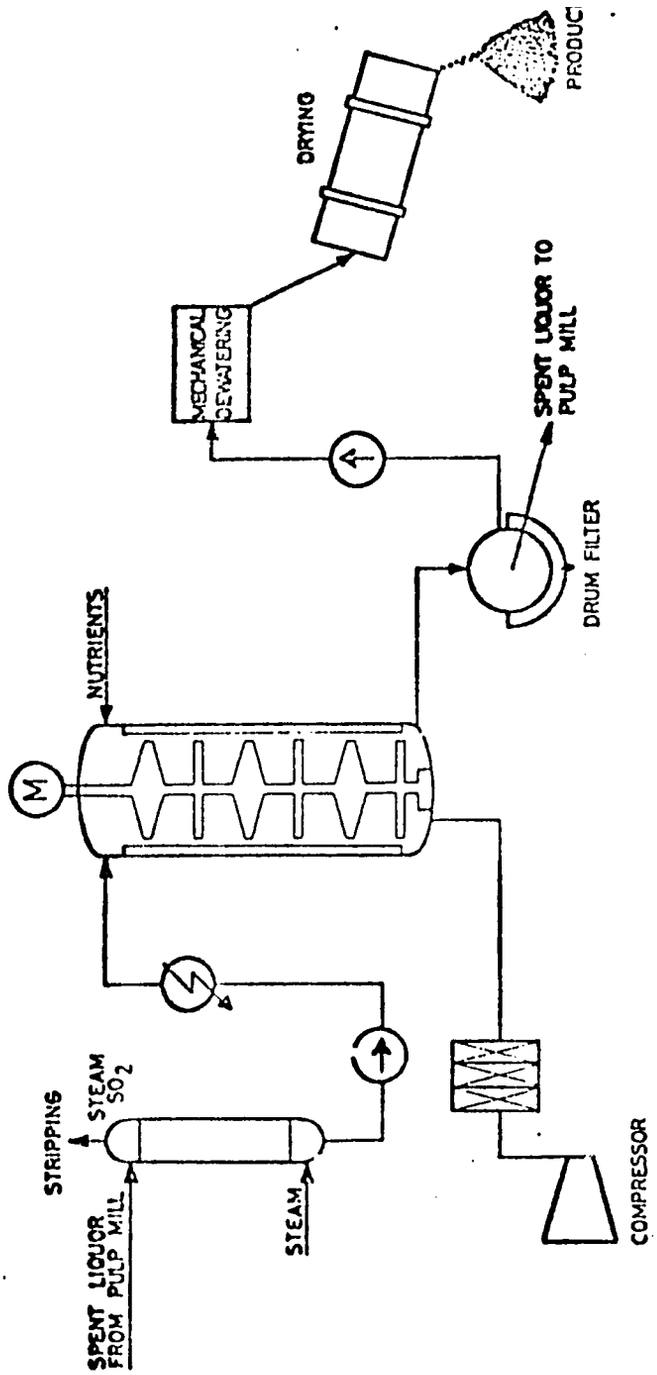

The major source of sugar in fermentations of this type is cane and/or beet molasses. In the case of banana, it would be possible to hydrolyze the starch with amylase to give a syrup which would be easily utilized. The concentrations of other nutrients required for the growth of yeast is dependent on the final desired cell concentration and the source of molasses.

The essential unit operations of the yeast process are: medium preparation, sterilization, fermentation and cell recovery. Although such a process can be run on either a batch or a continuous basis, batch fermentation is the traditional mode of operation. The yeast suggested for this process grows quite rapidly and in a cane molasses medium the cell doubling time is about 2 hrs. A cell yield of 0.5 g cell/g glucose is to be expected from the organisms. As a consequence the process time is generally less than 20 hrs.

In the case of banana starch, it would be necessary to first hydrolize the starch to glucose prior to its addition to the fermentation. The cost for this step is relatively small.

A major difficulty and drawback with both bacteria and yeast is associated with the recovery of the resulting cell mass. Usually centrifugation is used for recovery, however, this may be costly in the context of Ecuador. Alternative methods should be explored such as flocculation. The major advantage of this approach towards the utilization of banana is that the yeast product is already an acceptable food product.

Production of Single-Cell Protein from Carbohydrates Using Thermophilic Fungi

A promising process for the production of single-cell protein for animal feed use has been developed by K. F. Gregory of the University of Guelph (Canada). The process was developed to utilize cassava as a sub-

strate and to be capable of operation under nonsterile operating conditions. A thermophilic fungi, Aspergillus fumigatus, was the organism of choice. Pilot plant studies using this process are being carried out at the International Center for Tropical Agriculture (CIAT) in Cali, Colombia.

Screening tests by Gregory resulted in the selection of a thermotolerant mold that was identified as Aspergillus fumigatus. Mutation of this species yielded an asporogenous form named I-21A. The strain grew well on gelatinized starch at temperatures between 45° - 50°C and at a pH of 3.5. Mean cell mass doubling time under these conditions was 3.5 hours. The crude protein content of this organism was about 37%.

Ground cassava was the substrate used by Gregory. It is presumed that any source of starch should be suitable as a substrate including green or ripe plantains and bananas. It was reported that the starch needed to be gelatinized by heating in water to 70°C to achieve total utilization by the cells. Cell yields per unit of starch metabolized in the aerobic culture were consistantly between 45% and 50%.

Basal salts media used for production of mycelia included KH_2PO_4, $MgSO_4.7H_2O$, KCl, $CaCl_2$, $FeSO_4$, $ZnSO_4$, and used urea as the source of nitrogen. Fermenters were innoculated with 10% by vol. of actively growing seed cultures of the organism. No pH control was necessary if urea was used as the nitrogen source. Fermenters were steam sterilized between batches but actual fermentation runs were made under nonaseptic conditions.

C. Product

We recommend that the product of the proposed process be a dry, high-protein (35%-40% protein) meal of animal feed-grade quality. The primary market would be the poultry feed industry.

Although prices are controlled for poultry and poultry products along with the other foods, there exists a much better product-price/feed-cost ratio for poultry products. This is primarily due to the higher feed efficiency ratio given by poultry (lbs. gain/lb. feed consumed). This would appear to be the best industry to accommodate a new high-protein feed supplement.

The production and sale of balanced animal rations and feed ingredients is a healthy and growing industry in Ecuador. The majority of the industry's production goes to poultry rations of various types, but rations for other animals are compounded and available although sold in relatively small volume. Most feed ingredients are of domestic origin with ample fish meal availability and a developing soybean production. Corn and other coarse grains are grown locally and are in a sufficient supply to satisfy the current demand level without imports.

Public agencies of the Federal government have expressed the feeling that a much higher level of animal feeding (using prepared rations) is desirable. Reports used for the justification of a proposed new feed plant stated that current animal feeds were used in only 3% of the total potential market. No basic data and very little explanation was given in the report to support this number so it must be suspect. However, one can probably safely conclude that the industry has good potential for growth.

Feed Ingredients

A listing of the major ingredients used in the formulation of animal feeds in the country is given in the table below. Also listed are the protein content (where applicable) and the cost based on 1975-76 quotes from several sources within the country.

COST OF BASIC FEED

RATION COMPONENTS - ECUADOR, 1975-76

MATERIAL	PROTEIN CONTENT	COST (U.S. $/ton)
(Source: Champion S.A. Alimentos Balanceados)		
Soy Meal	40%	200 (probably imported)
Cottonseed Meal	42-43%	120
Fish Meal	66%	200-210
Rice Polishings	-	60 - 100
Dried brewers grains		
complete	-	80
light grains	-	100
Molasses		20
(Source: Olyasa S.A., Oil Mill)		
Cottonseed Meal	45%	130
Soy Meal	42%	108 (domestic)
(Source: Vitarina Feeds, CENDES Report)		
Fish Meal	66%	193
Bone Meal	25%	141
Cottonseed Meal	45%	163
Alfalfa Meal	14%	133
Alfrechillo de trigo	9%	81
Palmiste	-	44
Palma real	10%	44
Conchilla gruesa	-	22
Conchilla fina		

Energy Sources

Coarse grains supply the major part of the carbohydrates in all ration and corn is by far the predominant grain. Corn (or maize) is produced in the country in amounts sufficient to meet current demands. The price of corn is controlled by the government but supply and demand changes evidently cause the price to fluctuate quite widely. Current corn price is about 160-180 S/100 lbs. (about 118-133 U.S. $/ton).

Another energy source that is used to some extent in rations is Banharina, a dried meal made from green bananas. About 9000 tons/yr. of this product is available from one plant near Quevado. The meal contains about 4% protein and 82% carbohydrate (mostly starch) and sells at the present time for 125 S/45 kilos (93 U.S. $/ton) although the official price limit is 186 $/ton.

Other materials such as urban food wastes, cooked bananas, banana drier's waste, etc. are used in swine feeding but values are difficult to determine and these products are not used in balanced ration formulation.

It should be noted that molasses (at 50% carbohydrate) is available in the country at 20 U.S. $/ton. It is used to some extent as a binder and flavoring agent in some feeds, but is evidently not used in cattle feeding as an energy source to any significant degree. Competition for the use of molasses exists with the rum and industrial alcohol industry. There is a planned expansion of industrial alcohol in Ecuador such that molasses availability may decrease.

Protein Concentrates

In comparison to most other countries located in the humid tropics Ecuador has a wide variety and good availability of quality, feed-grade

protein concentrates. This is no doubt due to the mandatory availability of domestic fish meal and the existence of considerable farm lands in the cooler Sierra region.

Fish meal is a major source of feed protein and is produced domestically from several meal and oil plants located on the Pacific seacoast. The government requires the industry to sell 20% of its production volume on the domestic market. The result is the availability of fish meal on the domestic market at an astonishingly low cost of 190-210 U.S. $/ton. Using a protein content of 66% this material supplies protein at a cost of 14.4 - 15.9 U.S. ¢/lb. protein. Value of fish meal on the world market is about 100 $/ton U.S. higher than its price on the domestic market.

Feed millers are able to obtain as much fish meal as they can use. However, a defacto limitation is placed on the demand for the material because of the predominance of poultry feeds and the fact that only a specific percentage of fish meal (less than total protein requirements) can be incorporated into the feed to prevent "fishy" tastes in meat and eggs.

Oil meals, such as cottonseed meal and soybean meal are produced in seven oil mills in the country. Cottonseed meal containing 43% protein is available in good quantity at 120 - 160 U.S. $/ton. (a protein cost of 13.9 - 18.6 ¢/lb. protein). Soybean meal is available in quite limited supply at a cost that is about the same as cottonseed meal. Plantings of soybeans are increasing and the government is very interested in the success of the industry so volume should increase.

Bone meal and alfalfa meal are available domestically in limited supply. Bone meal at 25% protein and a price of 141 U.S. $/ton supplies

protein at a cost of 28¢/lb. protein. Alfalfa meal sells for 133 U.S. $/ton and with 14% protein supplies protein at a cost of 47¢/lb.

To compete successfully in the domestic feed protein market it is expected that an SCP of suitable digestibility and quality would need to supply protein at a cost of 15 - 18¢/lb. protein. Assuming a protein content of 50% this would indicate a selling price for the whole cells of from 8 - 9¢/lb.

There has been some feeding of Baker's yeast to laying hens in the country with very good results. However, the cost of this yeast is very high and its use in feeds is not conventional. There is also limited use of Brewer's yeast for feeding. This does show that, in fact, the introduction of an SCP product into the feed-protein market may not be too difficult if prices are competitive.

Animal Feeds

A comprehensive listing of animal rations available in the country along with their costs was prepared by CENDES (a government information service) in Oct. 1975. This information is presented as completely as deemed necessary in the following table. The information is largely self-explanatory and translations have usually been provided where needed.

The most important parts of this table are the quotations for poultry feed. These quotes show that most chicken feed sells for 140 - 180 U.S. $/ton. It is expected that variation of price within this range is due to level and type of protein supplied.

COSTS OF ANIMAL RATIONS - ECUADOR, OCT. 1975

(Source: CENDES Report to ESPOL)

Company	Product		Cost (Sucres)	Cost (U.S. $/ton)
Productos "Vitarina"	harina de pescado	(fish meal)	260 S/100 lbs.	193
	harina de hueso	(bone meal)	190	141
	Pasta de algodon	(cottonseed meal)	220	163
	alfarina	(alfalfa meal)	180	133
	alfrechillo de trigo	(wheat bran)	110	81
	palmiste		60	44
	palma real		60	44
	conchilla gruesa		30	22
	conchilla fina		35	26
Ecuador Farms S.A. (Alimentos balanceados para aves)	polli feed	(chick feed)	201 S/40 kilos	69
	polla No. 1	(chicken feed No. 1)	183	54
	polla No. 2	(chicken feed No. 2)	181	52
	pone feed		184	55
	broiler No. 1		230	93
	broiler No. 2		227	91
Vigor (para aves)	inicial pollitas	(chick starter)	96.55 S/20 kilos	162
	crecimiento pollonas	(growth ration)	89.55	150
	desarollo pollonas	(development ration)	87.55	147
	ponedoras juala		92.05	155
	pondedoras piso		88.55	149
	inicial engorde	(fattening ration)	113.55	191
	acabado engorde	(finishing ration)	112.05	188

Company	Product	Cost (Sucres)	Cost (U.S. $/ton)
A.B.A. - S.A.			
(para anes)	pre-inicial broilers	243 S/100 lbs.	180
	inicial broilers	235	174
	finalazador broilers	230	170
	inicial pollitas	195	144
	crecimiento pollitas	178	132
	desarollo pollonas	173	128
	pastura piso	181	134
	postura jaula	185	137
Alimentos Balanceados			
(para ganado)	(for cattle)		
	ternera 18% (calf feed - 18% protein)	76.50 S/50 lbs.	113
	ternera 16%	75	113
	ternera medicada	92.50	137
	vacona (basic ration)	65	96
	leche 12% (milking ration - 12% protein)	67.50	100
	leche 14%	66.50	98
	leche 18%	66.50	98
	vaca seca (dry cow)	65	96
	rejo V.M.	59	87
	reproductar	64	95
(para Porcinos y equinos) (for swine and horses)			
	inicial cerdos medicados (medicated swine starter	112.50/50 Lbs.	167
	crecedor cerdos	87.50	130
	engorde cerdos	82	121
	cerdos gestacion	87.50	130
	cerdos lactancios Medicados	90	133
	Potrillo (colt)	89	132
	Caballo (horse)	80	119

Company	Product	Cost (Sucres)	Cost (U.S. $/ton)
Super S - Alimentos Balanceados			
(anes, broilers)			
	pollos iniciador especial	113.50 S/20 kilos	191
	pollas engorde	111	156
(aves, reemplazos)			
	Seven rations listed, price range	84 - 95.50	141 - 160
(anes, medicados)			
	Five rations listed, price range	95 - 114.50	160 - 192
(anes, concentrados)		145 - 147	244 - 247
(equinos) (horses)			
	super caballo especial	70.50	118
	caballo especial	58.50	98
(Porcinos) (swine)			
	cerditos iniciador especial	79	133
	cerdos crecimiento	82	138
	cerdos engordo	75.50	127
	cerdos especial	82	138
	concentrado cerdo 35% especial	160	269
(peces) (fish)			
	super pez especial	100	168
(roedores) (rodents)			
	ratocitos especial	117	197
	conejos	95	160
	cuyes	112	188
(bovinos) (cattle)			
	terneros iniciador	62	104
	terneros crecimiento	55.50	93
	super leche especial	57.50	97
	super toro especial	57.50	97
	ganado especial	55	92
	concentrado super leche 32% especial	77	129

D. Process

1. Flow Plan

A process flow sheet is shown below which could serve as a preliminary design for a process to utilize Aspergillus fumigatus I-21A to produce SCP from bananas. The flow sheet shows that whole bananas could be mascerated and mixed with nutrients and water into a medium. The medium would be pumped to one of a series of fermenters until the vessel was filled to operating volume. The vessel could then be heated to 100°C for about 10 minutes to gelatinize the starch and carry out a partial sterilization or pasturization. The medium could then be cooled to 45°-50°C, innoculated with a seed culture of the fungi, and operated under aerobic conditions as a batch culture for about 20 hours. Mycelia and undigested banana solids could be harvested from the culture by simple filtration on a rotary vacuum filter. The solid filter cake could be dried in a rotary kiln and passed through a flaker to produce a meal-like product. Drying in the kiln would inactivate all cells.

Advantages and Disadvantages

The application of this type of process to waste or excess bananas has a number of advantages. There are, of course, disadvantages which will be discussed in the following listing.

Advantages:

1. The use of an amylase-producing fungi such as A. fumigatus would allow the use of green as well as ripe bananas. All starch could be used if it were gelatinized.
2. The mycelial fungi would be simple and easy to harvest, and could be separated from the culture liquor by using a cloth or screen filter.

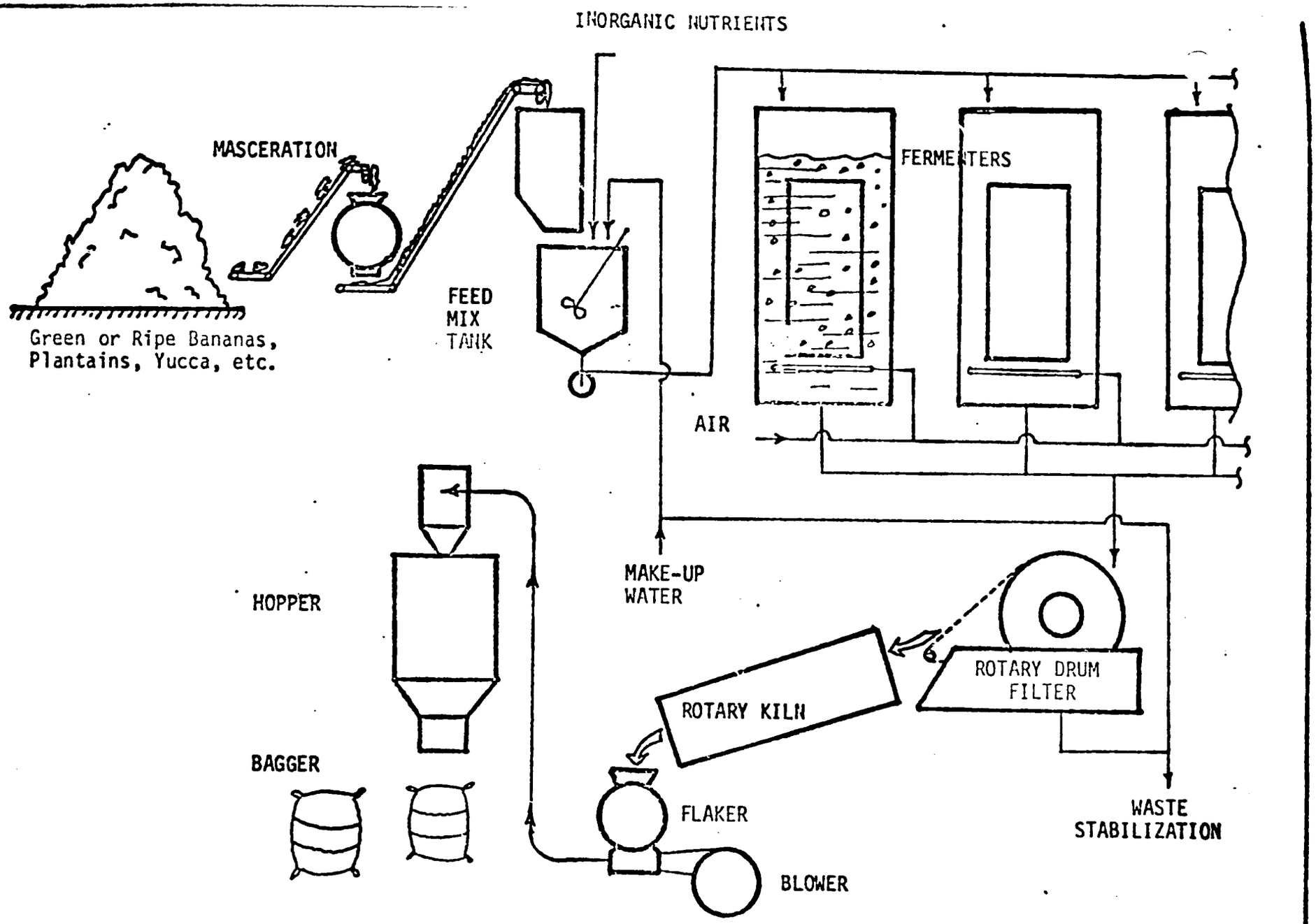

PRELIMINARY FLOW SHEET-FUNGAL SCP FROM BANANAS

3. The operating pH and temperature would allow the fermentation to be carried out using non-aseptic techniques in simple fermentation tanks.

Disadvantages:

1. Fungi (including A. Fumigatus) have not been used as animal feed to the same extent as yeasts. There would be more risk of consumer rejection and nutritional problems with an organism of this type than with a standard yeast.
2. Protein content of the fungi is lower than that of most yeasts and bacteria.

2. Material Balances

Material balance calculations are given below for a fungal or yeast fermentation of bananas producing a product containing about 50% crude protein.

BASIS: 1 ton (2000 lbs.) whole bananas; 70% pulp, 30% peel

↓

1400 lbs. banana pulp
30% solids, 70% moisture

↓

420 lbs. dry banana pulp
90% fermentable carbohydrates

↓

378 lbs. dry, fermentable carbohydrate
(carbon substrate)

↓

yeast or fungi grown aerobically in non-aseptic system. typical 50% cell yield on substrate is expected

← nitrogen
← phosphorous
← sulfur
← other inorganics
← vitamins, growth factors, etc.

see next page for sources, amounts, and costs

↓

189 lbs. cell mass (dry)
contains about 50% protein

↓

94.5 lbs. protein

blended ration
(8% - 17% protein depending on use)

↘

ration wt.	1181 lbs.	556 lbs.
protein cont.	8%	17%

Inorganic Nutrients

Nitrogen

189 lb. cell mass containing about 10% nitrogen;

18.9 lb. N_2 in cells; we will supply 15% excess N_2 so;

22.23 lb. N_2 will be added per ton of whole, overripe bananas

source	%N	lbs. needed	cost/lb.	$/ton bananas	¢/lb. cells
Urea ($180/ton)	45	49.4	$0.09	$4.446	2.35
Ammonium Sulfate ($120/ton)	21.2	104.86	$.060	$6.29	3.33
Ammonia (anhydrous) ($200/ton)	77.8	28.57	$0.10	$2.86	1.51

Phosphorous

189 lb. cell mass containing about 4% phosphorous

7.56 lb. P in cells; we will supply 15% excess, so;

8.89 lb. P will be added per ton of whole, overripe bananas

source	%P	lbs. needed	cost/lb.	$/ton bananas	¢/lb. cells
Phosphoric Acid, super (70% H_3PO_4) ($160/ton)	22	40.41	$0.08	$3.23	1.71
Sodium Phosphate	18.9	47.04	$0.10	$4.70	2.50
Diammonium Phosphate ($140/ton) (18%N, 46% P)	46	19.33	$0.07	$1.35	0.72

(would also provide 3.5 lb. N)

Sulfur

189 lbs. cell mass containing about 1% sulfur;

1.9 lbs. sulfur in cells; we will supply 15% excess or,

2.22 lb. S will be added per ton of bananas

source	%S	lbs. needed	cost/lb.	$/ton bananas	¢/lb. cells
Magnesium Sulfate	26.6	8.34	$.061	0.51	0.27

Other Inorganics

Supplying Na, Ca, Fe, Co, Mn, Zn, and other trace inorganics to the media should not cost over

$1.00/ton bananas

or 1.50¢/lb. cells

Vitamins; Growth Factors

Supplying all growth factors to the media may be done for under

$0.75/ton bananas

or 0.39¢/lb. cells

Total Media Costs

Component	Cost $/ton bananas		¢/lb. cells
Carbon Source (bananas)		3.00	1.58
-Transportation	1.50		
-Handling & Storage	1.50		
Nutrients			
Nitrogen (Avg.)		3.75	1.98
Phosphorous (Avg.)		3.50	1.82
Sulfur (Avg.)		0.50	0.26
Other. Inorg.		1.00	0.50
Growth Fact.		0.75	0.39
Water		0.25	0.13
Total Media Costs		$12.75	6.66

Estimated Process Costs

	Costs	
	$/ton bananas	¢/lb. cells
Substrate & Media	12.75	6.66
Media Preparation	0.50	0.26
Aeration (Air Compression)	1.50	0.78
Filtration	1.50	0.78
Dewatering & Feed Ration Manufacture	1.00	0.52
Process Costs (Estimated)	$12.25	9.0¢

If an 8% protein feed is made and we can assume that other ration components may be obtained at $2.00/ton; the ration cost would be:

320 lb. cells @ 9¢ lb.	28.80
1680 lb. other @	2.00
	$30.80/ton ration

or

If 12% protein feed $45.20/ton ration

or

If 18% protein feed $66.80/ton ration

Project Size and Scope

1. Laboratory Work

From one to two years of laboratory work need to be carried out prior to start-up of a pilot plant. This work should be started in a well-equipped, well-staffed, laboratory (probably in the U.S.) where selected members of the Ecuadorean group would spend from 6 mos. to 18 mos. working closely with an expert professional on definition of the basic fermentation and processing steps.

At the same time this work is going on, the laboratory facilities in Ecuador should be upgraded and the major parts for the pilot unit could be designed, specified, and ordered, and the pilot-plant site prepared. When the Ecuadoreans return to the country the pilot plant could be assembled and the laboratory brought to full productivity with the trained staff. A professional advisor should be present in Ecuador for this phase of the project.

The pilot-plant start-up should occur from 2-3 years after initiation of the program. Plant operation should continue for about 1 to 2 years prior to the design and economic evaluation of a prototype production plant.

2. Pilot Plant Scale

The pilot plant should be sized to provide the minimum amount of product to:

a) Supply a use evaluation of a scale to permit valid determination of the nutritional value, consumer acceptance, and handling, packaging, and storage properties of the product.
b) Provide a valid basis for scale-up to a prototype production plant.

Both criteria should be met by a pilot unit capable of producing about 75-100 lbs. per day of dry product. This could be accomplished by using two fermenters, each of $3m^3$ capacity, running on a staggered 48 hour schedule. On any day, therefore, one vessel would be harvested while the other was being charged and inoculated. Proper inoculum or seed fermenters must also be provided.

E. Mechanism of Interfacing with National Group

Considerable interest in the prospects of developing a process to utilize waste bananas exists in a group at the Escuela Superior Politecuica des Litoral (ESPOL) in Guayaquil. The group is centered in the Department of Chemistry of the Institute and the members of the group are named in Section 3.3 of this report.

The group has, in fact, submitted a proposal to perform essentially the work herein recommended to several U.S. and international funding agencies. The group has generated national contacts and interest and, with proper and careful direction and aid, should be capable of carrying out the project.

F. Impact Projection

Because bananas are a major export or cash crop in Ecuador very much more is produced than can be consumed in the country. Associated with banana production is the fact that a certain fraction of the fruit will be blemished, cut, damaged, or otherwise unmarketable. This fraction varies from 10% to 25% of the crop. Of course, if banana demand on the international market is low then even more bananas are unexportable. The amount of unmarketable bananas in the country in recent years has been from 300,000 to 600,000 metric tons per year. If these bananas could find a market at 10 U.S. $/ton then from 3 to 6 million dollars would be added to the banana grower's income. If these bananas were processed to an SCP product that could be sold in an animal feed market to compete with the oil seed meals (160 U.S. $/ton) then from 4.8 - 9.6 million dollars of sales would be possible based on the SCP that could be produced.

The development of a process of this nature would make it possible to look at the feasibility of producing and using other sources of starch or sugar (plantain, yucca, molasses, etc.) for SCP production in case of future need.

Implementation and support of the banana project at the ESPOL would be very useful to the country from several points of view.

A. Success of the SCP production phase of the project could be useful to the economy as discussed above.

B. Development of the capability to carry out research and development programs of this nature would be most valuable. The development of faculty and staff expertise in technical and management areas is very important and would have a long-range impact on the technical self-sufficiency of the country.

C. The experience obtained by the ESPOL faculty and staff on this project could be used to attack other problems and projects in different areas of fermentation processes and technology. For example, the country may wish to investigate biosynthesis of fuels, solvents, pharmaceuticals, organic acids, or other chemicals; the trained group at ESPOL could address these development programs with much improved capability.

NOTE: Much of the information in this section was taken from; Final Tr Report, Advising Visit to ESPOL, May 1976, by Charles E. Dunlap and Charles L. Cooney, (available through the LIFE).

BREWERY AND DISTILLERY WASTES

Wastewaters from fermentation processes contain contaminants in sufficient quantities to be harmful if discharged directly into the environment. These solids in solution or suspension are usually a mixture of carbohydrates and protein which have nutritional value if recovered. The increasing cost of animal feeds with reasonable protein content, along with pressures to protect water quality, may make a number of protein recovery methods attractive.

Solid residues include spent grains and microorganisms. Brewers and distillers grains can be readily used for animal feeding in either wet or dry form. Alcohol and dissolved solids, including protein, can be recovered from the grain press liquor which is presently the major source of pollution in plants which process their spent grains. The quantity of high BOD effluent and the scope of the required treatment can be significantly reduced simply by practicing water conservation and good housekeeping in the plant.

A major problem in breweries in developing countries is the lack of equipment and technical manpower, a condition which severely hampers waste recovery programs. Most breweries in developing countries, however, are recovering their spent grains for animal feed, but they often dump excess yeast and grain press liquor into waterways (1).

Even when it is not feasible to recover a waste stream it is important to provide some treatment. Activated sludge

systems with Kraug process modifications have had the best results in treating brewery and distillery wastewater.

I. Brewery Waste Characteristics and Sources

Brewery effluent can generally be characterized as high-strength organic wastes with moderately high suspended solids concentrations (1). The wastes are generated from a number of plant operations as indicated in Figure 1. The major effluent streams from a brewery operation which must be contended with to avoid environmental problems are:

- Brewers' spent grains,
- Press liquor from concentrating the spent grains if they are to be utilized,
- Waste beer from spillage, bottling wastes, and equipment washings.

The raw waste BOD and volume from these sources can be quite high. No data is available on just how large these waste streams are in developing countries, but an indication is given by a recent survey of several American breweries (3). The mean raw waste loading levels for large brewing facilities are 3.05 lb/bbl beer (1622 mg/l). Biochemical Oxygen Demand (BOD) and 1.24 lb/bbl beer (772 mg/l) suspended solids in an average effluent rate of 8.3 gal. wastewater per gal. of beer produced. The actual waste levels in countries visited by the AIChE-AID/LIFE survey teams are probably considerably higher because of the small plant sizes, lack of engineering, and generally poorer housekeeping practices.

These concentrations of oxygen-demanding organic materials and suspended solids in the wastewater, at the quantities

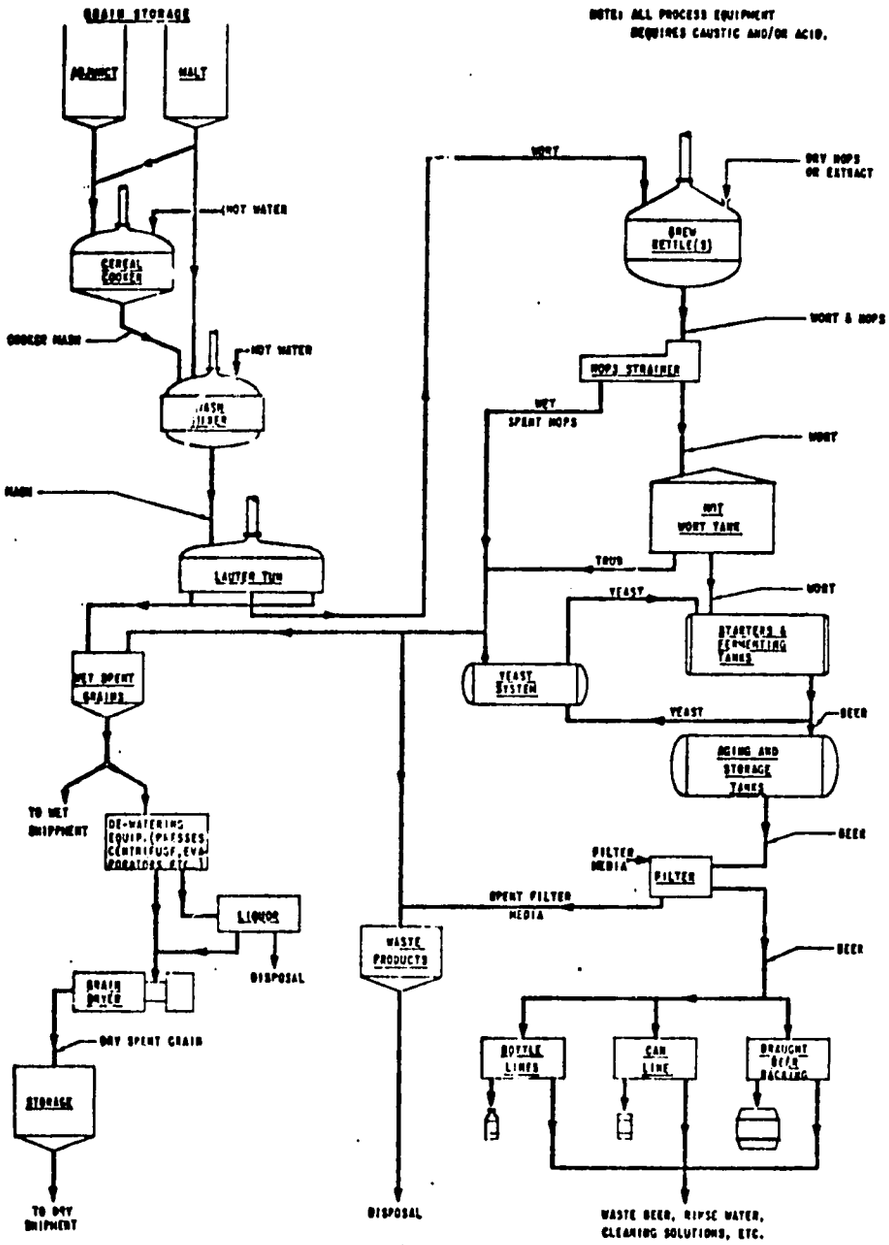

igure 1 - Basic Brewery Flow Diagram (1).

discharged, are sufficiently high to potentially cause oxygen depletion and sedimentation buildup in streams unless adequate treatment is provided. Therefore, treatment must be provided at either the brewery facility or at a municipal waste treatment plant prior to discharge to a stream (4).

The first step in controlling this problem should be an in-plant water conservation program which will reduce total plant effluent and concentrate this stream for easier byproduct recovery. Table 1 shows the low rate of waste discharge achieved at the Adolph Coors Company Brewery, Golden, Colorado by a continuing program of water conservation, in-plant waste reduction and recovery of waste materials as byproducts. The quantities of wastewater from in-plant sources contributing to the overall raw waste load are shown in Table 2. This table shows the significant reductions in raw waste volume that Coors has achieved relative to the brewing industry mean raw waste loads from in-plant sources including cooling water, cleaning, filtration, fermentation brewing and other sources (4).

A. Brewers' Grain Pressings and Waste Beer

Perhaps the largest single waste source is press liquor from grain drying. Spent grain from the lauter tun is normally sold as feed. Rather than sell the wet grain slurry, some brewers elect to partially dry the spent grain using large mechanical presses. The liquor from these presses has a very high BOD content and may constitute 25 percent or more of the total plant BOD load. This liquid generally contains some 2% total solids, including a significant quantity of recoverable

TABLE 1 (5)

OVERALL PLANT RAW WASTE CHARACTERISTICS

Parameter	Coors Raw Waste Loads [1]	Brewing Industry Mean Raw Waste Loads [2]
Raw Waste Volume	108.5 gal/bbl [3] beer	257 gal/bbl beer
Raw Waste BOD	0.75lb/bbl beer (825 mg/1)	3.05 lb/bbl beer (1622 mg/l)
Raw Waste Suspended Solids	0.26 lb/bbl beer (280 mg/l)	1.24 lb/bbl beer (772 mg/l)

[1] *Based on average at Coors for month of June 1973.*

[2] *Industrial Waste Survey of the Malt Liquor Industry SIC No. 2082 prepared for the Environmental Protection Agency, August 1971, by Associated Water and Air Resources Engineers, Inc.*

[3] *One barrel contains 31 gallons.*

TABLE 2 (5)

RAW WASTE CONTRIBUTIONS FROM IN-PLANT SOURCES

Source of Raw Waste	Coors Raw Waste Loads [1] (gal/bbl beer)	Brewery Industry Mean Raw Waste Loads [2] (gal/bbl beer)
Cooling Water	3.1	43.5
House Cleaning	15.5	21.8
Aging	24.8	12.4
Filtration	6.2	21.8
Fermentation	6.2	9.3
Brewing	9.3	37.3
Malting	40.3	–
Other	3.1	111.6
TOTAL	108.5	257.7

[1] *Based on average at Coors for month of June 1973.*

[2] *Industrial Waste Survey of the Malt Liquor Industry SIC. No. 2082 prepared for the Environmental Protection Agency, August 1971, by Associated Water and Air Resources Engineers, Inc.*

protein (2).

There are a number of streams which carry waste beer. Beer has a BOD of about 100,000 to 150,000 mg/l and, thus, one 12-oz bottle of beer has just a little less BOD than the daily per capita domestic waste load. Wash-water from the various brewing vessels, general plant washdown, and waste beer from breakage and spillage in the packaging lines, therefore, contribute large waste loads (2). Such an effluent is very high in BOD and can, of course, contain significant quantities of alcohol. A recovery installation has been developed in the United States designed to recover alcohol from such a stream and at the same time concentrate the spent grain pressings to provide a concentrate suitable for drying together with the spent grains themselves, to provide a protein enriched dried product. The process for the treatment of these effluents is illustrated in Figure 2 (5). The alcoholic effluent stream is initially treated separately. Since it can also contain significant quantities of CO_2, it is first of all subjected to a degassing operation by heating, first in a plate heat exchanger, and then in a tubular heat exchanger and flashing at atmospheric pressure. The degassed effluent material is then fed to a stripping evaporator which is of the falling film type with recirculation. The vapour/liquid separator on this unit is fitted with a suitable packing in order to provide some rectification of the alcohol/water vapour mixture. This alcohol enriched vapour is taken away from the plant for rectification. The partly concentrated and de-alcoholized effluent is then

cooled by giving up some of its heat to the incoming material and combined with the remainder of the effluent, consisting mainly of spent grain pressings.

This then constitutes the feed to another evaporator system, operated on the reverse feed principle so that the viscosity of the concentrated product is kept to a minimum by arranging for it to be produced on the effect operating at the highest temperature. This is a multiple effect evaporator with effects other than the first, operated on the falling film principle as these require to handle the more dilute product. The first effect consists of a two-stage forced circulation evaporator arranged with the two stages operating in series on the liquor side. This ensures that the most viscous concentrated product is only present in the final stage, makes the most effective use of the heating surface area and gives economy in the use of power for pumping. The concentrated effluent may be dried separately or in admixture with the spent grains to provide a valuable ingredient for compounded animal feed.

B. Waste Brewer's Yeast

In the production of beer, yeast is produced in the fermentation process in considerably greater quantity than that required to maintain the process, and therefore, considerable quantities have to be removed from the system. The waste yeast constitutes a difficult effluent to treat and is therefore often dumped directly into rivers. This high BOD effluent is also rich in protein and vitamins, and these two factors combine to make it very suitable for recovery and utilization. The yeast is

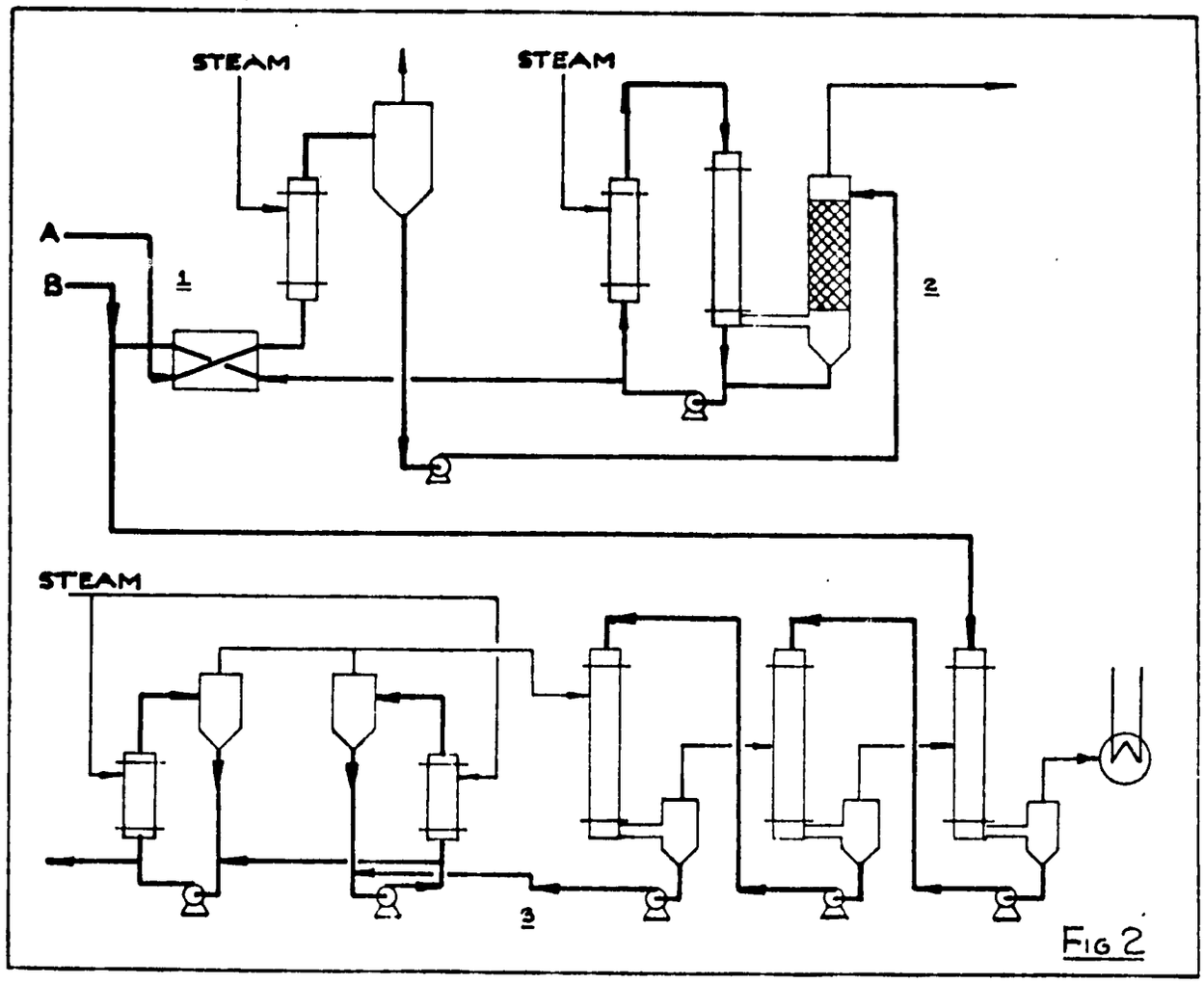

Figure 2 - Process for Solids Recovery From Brewery Effluent (5).

A. Alcoholic Feed Stream.

B. Non-alcoholic Effluent.

1. De-gassing Stage.

2. Alcohol Stripping and Partial Rectification.

3. Multiple Effect Evaporator.

discharged from the process in the form of a slurry at about 16% total solids. This slurry also contains alcohol at a concentration between 2 and 2.5% which can be recovered separately. The recovery process is made a little more complicated by virtue of the presence of viable yeast cells and CO_2 in the waste yeast discharge, and a process which has been adopted in Germany is illustrated in Figure 3 (5).

To improve the economic feasibility of yeast recovery the yeast bearing effluent is transported by road tanker from a number of breweries to a central processing plant. After initial storage, it is sieved to remove large particles and any foreign materials. After further storage, it is heated in a plate heat exchanger to 75°C by hot water, in order to kill off yeast cells and to inactivate the enzymes present in the cells. The plate heat exchanger is chosen to give gentle heating with a low temperature difference across the heating surface. This is important if fouling by yeast particles is to be avoided. Still at 75°C, the yeast is then stirred in a specially designed tank where CO_2 and other volatile materials are allowed to escape. This partial de-gassing stage enables subsequent concentration to be carried out in a plate evaporator without foaming. This low heat contact time evaporator concentrates the material, under vacuum, to 30% total solids and the gentle heat treatment thus imparted ensures that any degradation of the nutritive value of the yeast is minimized. The concentrate from the evaporator is then fed via a buffer tank to a roller dryer where it is dried to a final moisture content of between 8

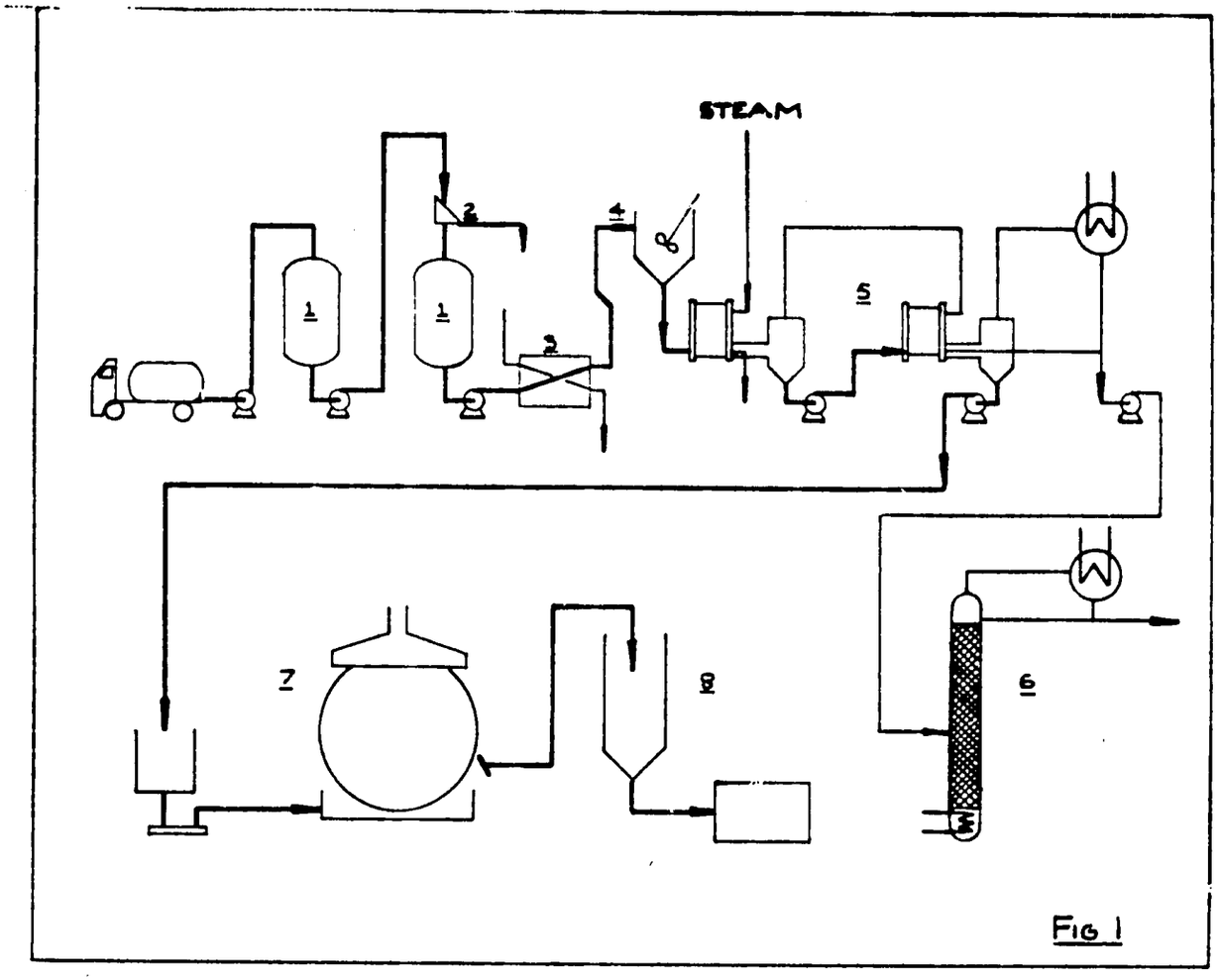

Figure 3 - Process for Recovery of Waste Brewers' Yeast (5)

1. Feed Storage Tanks.
2. Screen.
3. Plate Heat Exchanger.
4. Stirred De-gassing Vessel.
5. Plate Evaporator.
6. Alcohol Rectification Column.
7. Roller Dryer.
8. Product Storage and Packaging.

and 10%; the product is then bagged for dispatch.

In the evaporator, the alcohol present in the original waste material is distilled off with the water and the condensate from the 2nd effect of the evaporator and the condenser contains some 5% alcohol. This is taken to a rectification column in which the alcohol concentration is increased to a level suitable for sale.

The approximate composition of the solids in the yeast product is shown in Table 3 and Table 4 indicates the vitamin content of the yeast as it leaves the fermenting vessel. The recovery process described, utilizing low temperature operation and gentle heating wherever possible, ensures that the minimum degradation of these vitamins occurs, rendering the product of excellent nutritive value for animal feeding.

C. Brewery Waste Treatment

Most breweries use some form of an activated sludge process to treat the wastewater that cannot otherwise be utilized. Conventional activated sludge systems have been the most popular in the past, but many of these have been converted to the Kraug Process when sludge bulking has become a major problem. This process appears to be the best suited for brewery wastes. If the press liquor is to be treated by this method it should be fed at a constant rate from a holding tank to avoid high level BOD upsets resulting from batches being dumped. Care should also be taken to make sure that the system is not upset by sudden pH changes due to washes.

TABLE 3 (5)

Approximate composition of the total solids of brewers' yeast:-

Ash	8%
Carbohydrate	43%
Protein (Nx 6.25)	47%
Fat	2%

TABLE 4 (5)

Vitamin content of a bottom fermented brewers' yeast referred to yeast total solids:-

Thiamin (B_1)	150	/mg
Riboflavin (B_2)	50	"
Niacin (nicotine acid amide)	500	"
Pantothenic acid (B_3)	120	"
Pyridoxin (B_6)	30	"
Biotin (H)	1.1	"
Folic acid	45	"

Trickling filters are cheaper than activated sludge treatment. However, performance is mediocre with treatment efficiencies being well below current acceptable levels and offensive odors compounding the problems (7).

D. Sludge Disposal

The disposal of primary and secondary sludges from brewery waste treatment operation is a severe problem, as it is at many treatment plants (2). The high BOD and suspended solids content of brewery wastes, however, results in a much higher solids production per unit volume of waste than many other wastes. A variety of sludge disposal methods have been used for brewery wastes with mixed results. Gravity thickening has been used with little success on both combined and waste activated sludges. Some plants presently use dissolved air flotation for thickening waste activated sludge with similar results, specifically a discharge solids content of about three to four percent. Anaerobic digestion is another major sludge disposal method. Vacuum filters can be used to collect the sludge with the filter cakes being land filled. These methods are intended for pollution abatement when recovery of brewery waste is not feasible or is incomplete.

II. Whiskey Distillery Effluents (5)

The recovery and sale of by-products from the effluent from whiskey distilleries is probably one of the best established processes of this type with major units in operation in Scotland, U.S.A., Canada, Spain and Japan. The important effluents from

whiskey distilleries, once again, come in two streams, one solid and one liquid. The exact nature of these varies depending upon the distilling process used and whether the product is a malt whiskey or a grain whiskey , and sometimes these streams are not separated until the recovery process begins. Nearly always however, in the course of recovery of materials from the effluents, the solids and liquid streams are treated separately. The processes described refer to the effluents from malt whiskey production but they do apply with only minor variations to the effluents from grain distilleries. The recovery plants installed in Scotland generally produce one of two possible products. The first, called Distillers' Dark Grains, is a dried mixture of all the effluent, while the second, called Distillers' Dried Solubles, is only the dried solids contained in the liquid stream. When the latter is produced, the solid material is disposed of separately, generally in the wet condition, for animal feeding.

A. Distillers' Dark Grains

In many cases plants are set up to serve a number of small distilleries and in these circumstances the liquid effluent, known as pot ale, is delivered by road tanker, screened and passed into storage. It is immediately heated to a sufficiently high temperature to prevent bacterial action leading to secondary fermentation, resulting in the presence of volatile materials which would subsequently contaminate the condensate from the evaporation stage and produce a high B.O.D. effluent. From this hot storage, the pot ale is then taken to an evaporator where it is concentrated from about 4% total solids to some

40-50% total solids. The concentrate is held in an intermediate storage tank. Meanwhile, the solid grain effluent, known as draff, is also delivered by road and stored in the wet condition in a hopper. It is then continuously transported to a screw type press where its moisture content is reduced from about 78% to 65% before being fed, in this instance, to the first of two dryers in series. The partially dried product from the first dryer is then mixed with syrup from the intermediate storage tank before drying is completed in the second dryer. The product is then passed to a pelletising plant and from there to bulk storage or bagging facilities ready for dispatch.

B. Distillers' Dried Solubles

The manufacture of this by-product is similar to that already described for Distillers' Dark Grains except that there is no solids processing line. The pot ale is treated in exactly the same way, but the syrup has to be mixed with lime prior to drying, in order to produce a product which is not too hygroscopic. In this process, spray drying is often used, as the dryer does not have to handle solid particulate material. Distillers' Dried Solubles is seldom dispatched in bulk due to its hygroscopic nature and is generally bagged for sale.

Distillers' Dark Grains forms a readily saleable and useful ingredient for compounded animal feeds and is capable of storage over extended periods. Distillers' Dried Solubles, on the other hand, has found particular application to the feeding of poultry,

but requires more careful storage. Typical analyses of these products are given in Table 5.

III. Economic Considerations (5)

All the processes described in this paper involve the removal of water from relatively dilute liquid effluents, or very wet solid ones, and as the removal of water by thermal means involves the use of large quantities of energy, the economics of such processes tend to be very much affected by the efficiency of the means of water removal adopted. Obviously, wherever possible, mechanical dewatering methods should be used, and examples of this have been quoted in the pressing of brewers' spent grains, and distillers' wet draff, prior to drying by thermal means. Other mechanical processes not described include centrifugation of certain whiskey distillery effluents to separate solids from the liquid effluent and partially dewater them before further processing. Membrane processes offer interesting possibilities either in the modification of the effluents prior to processing by more established means, or in carrying out preconcentration duties. However, current uncertainties with regard to membrane life coupled with the variable nature of the effluent products considered, render commercial developments in this field very slow.

The greatest contribution which has been made over the years to improving the economy of such processes by reducing the energy consumption, has been made in the field of water removal by thermal means and particularly in the area of

TABLE 5

TYPICAL ANALYSES FOR DARK GRAINS AND DRIED DISTILLERS' SOLUBLES

	Dark Grains ex Malt	Dark Grains ex Grain	D.D.S. ex Malt	D.D.S. ex Grain
		Per cent		
Moisture	10	10	5	5
Protein	22	25	26	27
Fat	5	7	1	8
Fibre	11	7	1	4
Ash	5	4	17	8
Carbohydrate (by difference)	47	47	50	48
		Milligrammes/gramme		
Amino acids				
Lysine	9.3	4.0	11.9	9.0
Methionine	3.1	4.8	3.7	5.4
Arginine	-	-	4.5	11.8
Cystine	2.1	3.1	0.8	0.8
Histidine	-	-	4.3	6.3
Phenylalanine	-	-	7.0	23.6
Tryptophan	-	0.9	0.7	1.1
		Microgrammes/gramme		
B-vitamins				
Aneurin	2.2	-	1.5	3.5
Niacin	165	55	510	76
Pantonthenic acid	34	9.7	67	11
Riboflavin	11.2	7.5	21	12
Choline	5600	2700	2000	3100
Pyridoxin	4.6	-	19	1
Biotin	0.22	-	0.7	0.3
Inositol	2250	-	10000	7200

evaporation. There are many suppliers of evaporation equipment and many types of plant available and careful selection of the right equipment can ensure that the recovery of such residues as have been described can be carried out most economically and effectively.

The importance of selecting an evaporator which operates economically is illustrated by the Distillers' Dark Grains process in which for every ton of final recovered product, ten tons of water have to be removed from the original effluents of which 8.5 tons are removed in the evaporator. Although the evaporator removes the greater part of the water which has to be removed in these processes, the economy of operation of the dryer is also important. This is because dryers are generally mush less economical to operate than evaporators requiring the energy equivalent of 1.2 to 1.5 kg of steam for every kg of water evaporated.

When attention is paid to these factors then it is possible to make recovery processes from the residues that have been described look much more attractive in economic terms than might otherwise be the case, although the picture remains heavily influenced by the price for which the product can be sold and by the cost of alternative methods of disposal of the residues themselves.

IV. Information From AIChE AID/LIFE Project

Information on brewery wastes, obtained primarily from the site visits made as part of the AIChE AID/LIFE project are herein presented.

A. National Breweries, Ltd., Kitwe, Zambia (6)

National Breweries makes opaque beer from corn at fourteen plants throughout Zambia. This product is common throughout eastern and southern Africa. Also produced is munkoyo, which is nonalcoholic but otherwise similar to opaque beer. About 1.5 million 90 kg bags/yr (roughly 10,000 bu/day) of corn are consumed.

The procedure for producing opaque beer is as follows: Whole kernel corn is cooked with high pressure steam until the corn kernel disintegrates. Enzymes BAN 360 and AMG 150 from Novo are added to liquefy and convert the starch, and the mash is then filtered. The material is cooled to room temperature, baker's yeast added, and the brew allowed to ferment for 24 hours. The alcohol by this time is 2 to 3% and the total solids 8 to 9%.

The beer is ready for sale at this stage, and is dispersed in bottles, buckets, and cans brought in by the customers, who consume it immediately. Corn beer is the common man's drink and sells for about 11 ngwee/liter ($0.14/liter) compared to malt beer at 35 ngwee/375 ml ($1.20/liter).

The material filtered out of the mash after saccharification, which presumably consists of bran and germ with some endosperm chunks, is hauled away by farmers for feed. They pay only a very small price for it. National Brewers would like to expand the production of the corn beer and also dry the feed to get more return from it.

C. Zambia Breweries, Ltd., Lusaka (6)

INDECO owns 51% of Zambia Breweries, Ltd., twenty-nine percent is held by Labatts of Canada and the remainder is by private groups. It is the only producer of bottled beer in Zambia.

The brewery, completed in 1968 with German equipment, uses a 95% malt/5% corn mix as its feed and produces a good beer of 3.5 wt % alcohol. The 5% corn limit is due to a lack of a cooker which cannot be imported due to currency restrictions. With a cooker, the brewery would be able to cut down on malt, an import, and perhaps reach the 35 to 65% corn mix used in the U.S.

Zambia Breweries has had production problems for over one year. It cannot get spare parts to solve these problems due again to import restrictions. Pumps, mash tanks, and copper vats are difficult to obtain due to import restrictions and shipping times. A boiler, bought in 1976 to increase capacity, is down due to lack of parts. Pumps are sitting in the shop waiting for parts. Many simple items cannot be bought or made there.

Part of the production problem is also due to the lack of trained personnel. The University of Zambia may produce 30 engineering graduates/yr. The only way Zambia Breweries can get an engineer is to sponsor one and wait five years for the technical school product. Welders, mechanics, and electricians are also short and the brewery has no systematic training program.

Yeast was collected and dried for feed. The dryer is also out now so that yeast is dumped. Spent grains, now in demand by cattle ranchers, are sold wet. About 16-17 ton/day are produced.

Wash water and spilled beer goes into a sewer. The city charges a fee based upon BOD.

Zambia Breweries has a large, eager, and bright sales force of high school graduates trying to increase sales despite production problems, import restrictions on malt, and not enough vehicles. The plant can produce four to five million liters/month or 1600 bbls/day when operating properly, but recently production has been about one million liters/month.

This company, completely Zambianized except for the German brewer (all other expatriates left after INDECO took over) serves as a model for what can happen to other companies if expatriates are replaced too quickly. Lack of import capital and lack of technical manpower have dramatically reduced brewery output.

D. National Brewery, Ecuador (7)

A major waste at this operation was 35,000 liters of yeast sludge which is dumped every week into the Guayas River. Though this is not a particularly large amount there is a possibility of recovering the yeast for animal feed. A suggestion was made to the personnel at ESPOL* to investigate recovery by filtration of the sludge through ground rice hulls.

In all the other countries visited by the second survey team (Latin America), it was noted that the spent brewer's grains

---

* - Escuela Superior Politechnica del Litoral.

from most breweries were collected and dried for animal feeds either by the brewery itself or by a private contractor. However in some cases the waste yeast from clarification operations was simply dumped in a river and not recovered. The quantity of waste yeast from a large brewery may, in fact, be of sufficient magnitude to justify some type of recovery process. However, this technology is well developed and well known. Its application should only depend on local economics considerations in places where this waste is available.

E. San Miguel Brewery, Manila, Philippines (8)

The San Miguel Corporation is very much involved in waste utilization as summarized in Table 6. Spent grain press liquor from the brewery is dried and mixed with corn in a company owned poultry operations. The dust generated at the feed mill is recovered in cyclones and used in feed. Underdrain liquor is used by individual farmers as hog feed.

At the brewery, the liquid wastes are treated by an activated sludge unit to produce a clear effluent of 20 - 30 ppm BOD. San Miguel is interested in growing chlorella on this effluent for animal feed purposes and for protein extraction. The excess sludge from the treatment plant is high in protein, and they are trying to dewater this sludge by filtration to produce animal feed. Feeding trials with broilers have been promising, but dewatering of the sludge is difficult.

F. Thailand (8)

Wastes from breweries and distilleries are apparently of some environmental concern. Spent grains from some of the

TABLE 6

WASTES AND BY-PRODUCTS
SAN MIGUEL BREWERY, MANILA, PHILIPPINES

Product	Wastes	(Possible) Use	Process of Conversion	By-products	Uses	Process of Conversion
Beer	Rinse water from bottle washer.	Recycled in the same equipment.	Sand filtration	Spent grains	Animal feed	Pressing, Drying
				Spent grain press liquor	Animal feed	Pressing
	Wastewater from the different brewing operations including other bottling wastes.	—	(Treated in an activated sludge process before thrown to sewer)	Brewer's yeast	Animal feed	Drying
	Excess sludge from wastewater treatment process.	(Animal feeds)	Dewatering and drying.			

breweries are used for animal feed, but reportedly none of the distillery slops are used. There has been some industrial interest in recovering and drying yeast for reuse in fermentation. ASCRT* has worked on use of distillery slops as animal feed and has expressed interest in producing single cell protein from brewery and distillery wastes. Much of the carbon dioixide produced in the breweries is wasted and this has potential use in growing algae, an application which also utilizes other wastes.

G. Technology Consultancy Centre (TCC) Kumasi, Ghana (6)

TCC has been involved in the use of spent brewer's grains. After pressing the residue, three 3 kw electric heaters can dry 25 tons/week of Kumasi Brewery's 100 ton/week output of wet grain. Earlier tests with drying using sawdust for fuel were unsuccessful, as the smoke gave the product a bad taste. Drying is necessary, since there are not enough cattle nearby or hauling facilities to use wet brewer's feeds, as is done in the United States. This material is quite worthy of use, being 21% protein on a dry basis, roughly half digestible.

TCC has arranged to have the dried spent grains used by University's herd of dairy cattle and also for horses, sheep goats, and rabbits.

IV. Summary and Conclusions

In recent years as government pressure has increased toward protecting the environment, coupled with the rising prices of protein additives in animal feeds, a considerable number of

* - Applied Scientific Research Corporation of Thailand.

distilleries and breweries have shown that it can be ecnomically attractive to recover nutrients from their process effluents. There are however problems which remain unsolved. The basic one is that the effluents from these industries do not always contain substances which are sufficiently desirable or in sufficiently short supply to reflect properly the cost of recovering them. There is little that industry itself can do to solve this problem and it is unlikely that such residues will find much utilization unless pressure is brought to bear upon the industries concerned to treat their residues for other reasons. This would only be economic where by doing so industry avoids substantial processing charges from local authorities or other statutory bodies. In the main processes for the recovery of useful materials from residues from the fermentation industry involve using large quantities of energy and the economic viability of them will continue to be improved as further attention is paid to reducing the energy requirements of evaporators and dryers and in particular if developments in the field of membrane processes result in more effective removal of water by mechanical means (5).

The problems encountered in recovering these wastes in developing countries have more to do with the lack of capital, trained manpower, and incentive rather than a technology shortage. Most of the breweries and distilleries in these countries are recovering their spent grains for animal feeding. The excess yeast from these fermentation processes is often dumped into rivers despite its high nutritive value. In light of these

conditions the second AIChE survey team (7) has recommended against USAID involvement in projects to reclaim nutritional products from brewing wastes because necessary technology is well-known and is available for any application where local economics are favorable. No pilot plant is necessary.

BREWERY AND DISTILLERY

REFERENCES

1. UNEP/FAO Seminar on Residue Utilization - Management of Agricultural and Agro-Industrial Wastes, "Residue Utilization - Management of Agricultural and Agro-Industrial Wastes," Rome, 18-21 January 1977.

2. Schwartz, H.G., Jones, R.H., "Characterization and Treatment of Brewery Wastes", Proceedings Third National Symposium on Food Processing Wastes, E.P.A., Corvallis, Oregon.

3. Industrial Waste Survey of the Malt Liquor Industry SIC No. 2082 prepared for the Environmental Protection Agency by Associated Water and Air Resources Engineers, Inc., August 1971.

4. Environmental Protection Agency Capsule Report, "Pollution Abatement in a Brewing Facility", Technology Transfer, E.P.A., Washington, D.C.

5. Gray, R.M., "Recovery and Utilization of Residues From Brewing and Other Fermentation Processes", UNEP/FAO Seminar on Residues Utilization - Management of Agricultural and Agro-Industrial Wastes, Rome, 18-21 January 1977.

6. Barnett, S.M., Reilly, P.J., Schopmeyer, H.H., "Trip Report", AIChE - AID/LIFE Survey Team III, January 3-29, 197

7. Barnett, S., Nystrom, J., Dunlap, C., "Trip Report", AIChE - AID/LIFE Survey Team II, October 23 - Nov. 17, 1976.

8. Fleischman, M., Steinkraus, K.H., Meade, R., "Conversion of Food WAstes into Feed or Food Products in Developing Countries", First Site Visit, AIChE - AID/LIFE Project July 27 - August 21, 1976.

CASSAVA
(TAPIOCA)

Tapioca is grown in most tropical areas of the world and is also known as cassava and manioc. The root (or tuber) is the valuable part of the plant and contains 20 per cent or more starch in a cellulose matrix. As a crop, its popularity with farmers is due to several attributes: it is easily planted and requires little attention; it can stand drought and short periods of flood fairly well; it grows in relatively poor soils; and it is high yielding compared with many other crops. A further advantage of tapioca is that it has no definite harvest time, after which it spoils. However, if tapioca crop is left too long, there may be marketing problems because of the oversized roots (which are usually unacceptable), increased fibre in the roots, and a decrease in starch content (1).

The greatest portion of the world production of tapioca is in South and Southeast Asia and Brazil. It is also produced in limited amounts in other South American countries and in Africa. Indonesia's production of tapioca (9.4 million tons in 1973) is next only to rice (14.7 million tons in 1973). In the Philippines, the production of all root crops, mainly tapioca, in 1975 was 1.8 million tons. Malaysia has a relatively small area under cultivation and produced 0.4 million tons. Thailand produced about 3 million tons of which 1 million tons is exported annually. In India, tapioca is cultivated only in the South and to a little extent in the hilly regions of NE India. The total production in 1972-73 was 6.3 million tons (2).

Brazil is the world's largest producer of tapioca, processing 30 million tons annually (3). Columbia and Ecuador produced 0.92 and 0.40 million tons respectively while the Ivory Coast produced 0.53 million tons

in 1974 (3).

I. Tapioca Utilization

"The tapioca plant has an unusually high photo-synthetic potential for conversion of solar energy into starch. About 3 tons of roots yield about 1 ton of meal. The roots are perishable and deteriorate within a few days of harvesting if they are not dried and adequately stored" (2).

"The tapioca plant is hardy and grows in sandy soils yet its uptake of nutrients from the soil is high. Small farmers in SE Asia therefore grow it on nearly cleared forest areas. The new commercial varieties have 38 per cent starch in the tubers and the yield is 40 tons/ha" (2).

"During the harvesting of roots, the woody stem of the plant is cut about 6" from the ground. The leaves along with the softer plant are fed to the farm animals. The leaves are consumed as a vitamin-rich green vegetable. The stem is used as a domestic fuel, as a replanting material or is ploughed back" (2).

Tapioca starch is an important native food in many tropical countries, e.g. flour in Brazil. The major outlet for tapioca starch is in the formulation of animal feeds or for export where it finds a number of end uses. The commercial tapioca feed may be in the form of dried (usually sundried) and chipped roots of various shapes or pellets. The pelletized product is preferred since it decreases the volume, is easier to transport and is uniform. It also permits the use of dried tapioca leaves and the residual pulp for starch manufacture (2).

Among the new uses of tapioca which have been suggested are its protein enrichment by direct solid-substrate or a liquid fermentation using starch degrading organisms. Non-aseptic fermentation of cassava for the production of a high protein animal feed is being studied at CIAT in Paly-

myra, Colombia (3). Dr. Nga Been Hen of the University of Singapore is growing different strains of endomycopsis on tapioca starch (4). Recovery of bio mass is attractive but the economics of production of the enriched food material have yet to be worked out (2). One possible limitation to fermentation of cassava starch is the simultaneous production of a strong wastewater.

There are several other applications resulting from special physical properties (1). Tapioca starch contains only 17 per cent amylose compared with 22 per cent in potato starch and 27 per cent in corn starch and, because of this, it possesses unusual viscosity characteristics. The large percentage of branch-chained amylopectins in tapioca starch gives it great dimensional strength, which makes it in particular demand for sizing paper or fibres, to give them greater tensile strength. Tapioca starches also possess specific characteristics that are in demand in the food industry. Some other uses are as a glazing for twine, as laundry starch, and in the manufacture of compressed yeast.

Brazil is considering producing alcohol for motor fuel by fermentation of cassava (5).

II. Environmental Impact

"The manufacture of pelletized tapioca does not generate any residue. Manufacture of starch and flour does and such residues are a serious pollution problem. The effluents consist of peels, pulp and liquids. The peels have no use except as a land fill. The pulp is usually pelletized along with the dried roots. It is also sundried and sold as animal meal (1 ton from 100 tons of fresh roots). The pulp composition in Thailand is as (per cent): moisture 12.7; ash 9.1; fibre 8.1; fat 1.0; protein 2.5; carbohydrate 65.9; (2).

In areas where tapioca is grown and processed, tapioca starch produc-

tion contributes significantly to stream pollution (1). The process to extract starch from tapioca roots (or tubers) requires large quantities of water, both for root washing and for the extraction of starch from rasped roots, and significant amounts of wastewaters are released. Heavy pollution of land and streams by this waste gives rise to a strong, obnoxious odour in the neighbourhood of factories, which is a nuisance to passers-by and residents. In addition, the acidic characteristics of the waste coupled with its high solids content make it detrimental to flora and fauna of streams to which it is discharged. Receiving streams become aesthetically unpleasant and their usefulness for irrigation and fishing is considerably limited. Algae growth is common in stagnant areas downstream of starch mills.

Even in cases where the receiving stream affords high dilution, the waste still imposes limitations on its use as a source of potable water supply, and rural people in developing countries are often seriously affected by uncontrolled discharges of this wastewater. Problems are magnified if the receiving stream affords little or no dilution during dry weather (1). For example at a Sago starch mill visited in Indonesia (6), the same water supply for washing starch and driving the grinding wheel, is used for drinking, bathing and cooking. This type of wastewater discharge in such a stream seems to represent a severe sanitation and rural water supply problem.

"As an example of the magnitude of the problem in comparison with other waste sources, it was estimated that in 1972 more than 80 per cent of the suspended solids and more than 95 per cent of the BOD_5 finding their way into the Gulf of Thailand from the Province of Cholburi in Thailand were from tapioca starch processing. At the present time, few factories have any control over their waste discharges and those that do attempt any form of treatment are guided by expediency alone and have usually limited their wastewater processing to inadequate holding in ponds. Few studies have been

carried out to arrive at rational and effective waste treatment processes for this waste."

It was estimated that in 1975 Brazil produced about 7.5×10^6 metric tons of press water (BOD ≈ 10,500 mg/l, COD ≈ 15,000 mg/l) from cassava flour production (7).

Several S.E. Asian countries have expressed concern over water pollution from starch processing. For example, Dr. Phrom (8) indicated that tapioca wastewater is the second highest governmental environmental priority in Thailand. However, even though pollution control laws may exist, they are rarely enforced.

Several research institutions have developed schemes to utilize the high organic content of the effluents prior to discharge. Tapioca wastewater contains about 3% starch and it is possible to produce single cell protein from tapioca starch wastewater. ASCRT (9) has grown Torula yeast for animal feed (as high as 50% protein) and is considering testing their method in the Denver Research Insitute fermenter for fungal conversion. Dr. Blackledge of Denver Research Institute has grown molds on tapioca starch wastewaters (10). The Asian Institute of Technology (11) has done much research on treatment of tapioca factory wastewater. Some institutes are experimenting on growing algae in wastewater remaining after fermentation of tapioca, using carbon dioxide (likely to be available from yeast propagation). The growth of algae is, however, slow and harvesting expensive (2). Algae can also be grown on wastewater from starch production. Because of the algae harvesting problem, it may be preferable to overflow the algae into an adjacent fish pond (11).

With regard to other tapioca waste utilization, ASCRT is piloting growth of protein for animal feed by fermentation of chopped cassava leaves. AIT has done research on acid hydrolysis of the pulp to yield inexpensive sugar

for yeast growth (6).

Possible approaches to the wastewater problem are

- Treat for suitable disposal, e.g. filtration or settling, followed by biological oxidation in a pond. Recovered solids could possibly be used as animal feed.
- Irrigation water for growth of rice in lagoons
- Use of a village scale fermenter, e.g. Tate and Lyle-type (12).

"The solution to the problem of tapioca starch wastewater treatment needs to be appropriate for the economic situation of this industry and should take advantage of local environmental conditions. Unfortunately, the economics of the tapioca starch industry are externally controlled by the world price of the product, with the USA being the principal buyer of tapioca starch. The fact that profit margins are low is exemplified by the stopping of processing when the starch content of the roots drops only slightly below the normal level (about 20 per cent in Thailand), as it does in wet weather. With this economic climate, it is unlikely that factories could adopt sophisticated waste treatment processes utilising expensive equipment and therefore low-cost methods are essential. An additional incentive to adopt simple wastewater treatment methods is the inadvisability of adding a complex waste treatment process to a factory where essentially simple processes are used and skilled operating staff are not available. These conditions apply to many agro-industries in developing countries and the general need for rational local solutions is apparent" (1).

III. Tapioca Processing

In Brazil, cassava is used to produce flour as well as starch. During processing the ground roots are washed, peeled, grated, pressed and dried, producing about 300 liters of press water per ton of roots (7).

In Thailand, tapioca starch is produced in two grades by two types of processes. Although the quality of the final product is similar in both cases, the processes used are not. The first-grade product is produced using centrifugation, filtration and spray drying as the basic unit processes; the process is capital intensive and uses less labour and more water than the other process. By contrast, very little mechanisation is utilised by second-grade starch producers, which are usually small private-enterprise plants; these installations are not capital intensive but use very simple methods of separation by cloth filtration, gravity settling, decanting and drying on heated concrete slabs (1)

First-Grade Tapioca Refineries (1)

The flow diagram of a first-grade tapioca starch plant is illustrated in Figure 1. Roots are transported by truck to the plant, which must process them within 24 hours to avoid degradation of the starch. Sand and soil are first removed, by dry rasping in a revolving drum, and then the peels, by mechanical tumbling in a wash basin, from which the root washwater is derived. The roots are then mechanically crushed releasing the starch granules from their surrounding cellulose matrix. Most of the cellulose material is removed by centrifugal means in a jet extractor and subsequently by continuous centrifugation. This cellulose material or pulp is sold as animal feed, mainly for ducks. After primary centrifugation, the starch milk is seived through a series of three seives decreasing in pore size to assist in separating the starch from the small amount of pulp remaining. The pulp thereby recovered is recycled to the jet extractor and the processed starch milk fed to a second continuous centrifuge, from which wastewater is derived and by which a more concentrated starch is produced. After dewatering to a paste-like substance in a basket centrifuge, the product is spray dried and packaged."

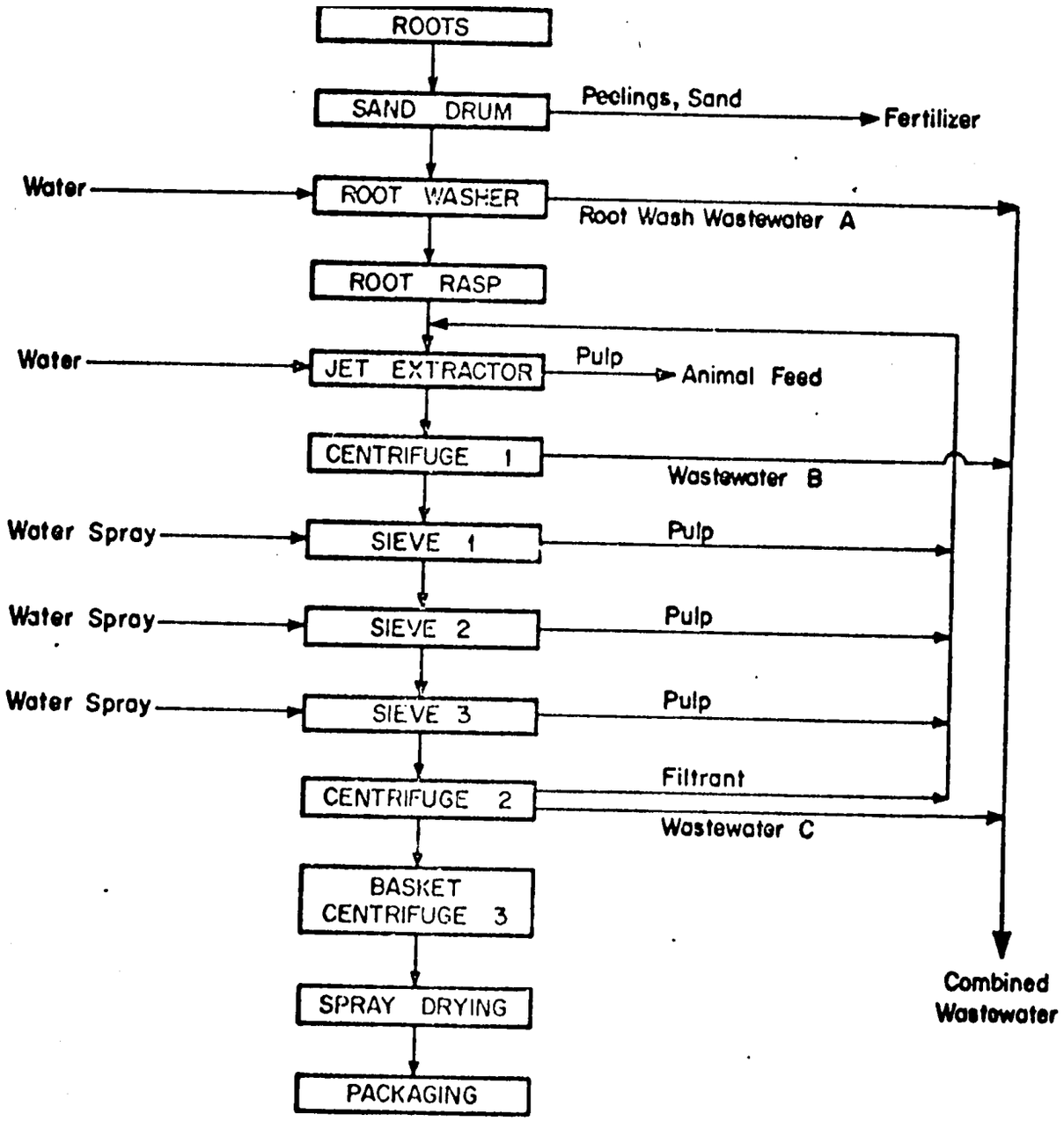

Figure 1.

First-grade Tapioca Starch Process (1)

Second-Grade Tapioca Refineries (1)

The flow diagram of a typical second-grade tapioca starch plant is illustrated in Figure 2. Here again, the initial stages of processing include dry removal of sand and clay, root washing and rasping. Starch is separated from the cellulosic pulp in only one step by screening it through fine nylon mesh supported by a large cylindrical drum. The starch is sprayed through the mesh and the pulp slowly drawn off and collected for dewatering. The starch milk is then sieved again and released into large deep (1.2 m) settling basins. After 24 hours of settling, the supernatant is removed by decantation and discharged, usually directly to a stream. The surface of the starch caked on the bottom of the basin is then washed, the washwater from which is normally discharged to an outdoor lagoon. The starch is resuspended and pumped to a second sedimentation basin (again 1.2 m deep), where the starch settles for 24 hours. (The supernatant is again decanted and discharged, usually to the stream, and the starch surface washed.) This surface washwater is discharged and stored in the same lagoon as the first surface washwater. The starch is then removed from the second basin as large pieces of cake and spread on a concrete pad heated with subsurface hot air for drying. After drying, the finished product is packaged and marked.

Even simpler operations are the family run plants that are characterized by low production and are labor intensive. An example, is the Sanchez Cassava starch plant located in the piedmount of the central range of the Andes (3). This is a very simple operation where the cassava root is hand peeled, sent through a rasper and washer and finally into a settling basin where the starch settles to the bottom and other material floats to the top. The "floats" from the settler and the "recillo" from the washing operation along with the peels are fed to swine (again an integral part of the operation). The starch cake which forms at the bottom of the settler is

recovered by decanting the liquid and then sun drying the granulated cake. The major waste product is the high BOD liquid decanted from the settler. This liquid along with the swine wastes and family sewage are all dumped to a small stream which passes "through" the small factory.*

IV. Wastewater Characteristics and Quantities

"Although tapioca starch is produced in two grades by two different types of processes, both first- and second-grade factories discharge two major wastewaters. These are washwater, from root washing (wastewater A in Figures 1 and 2), and separator waste, from jet extraction and channel separation in first-grade factories (wastewaters B and C in Figure 1), or starch supernatant decanted from sedimentation basins in second-grade factories (wastewaters B, C, D in Figure 2)" (1).

Different factories use different amounts of water depending on plant capacity and type and on the availability of water. In general, however, second-grade factories use less water and release less wastewater than first-grade factories, 6.3 l/kg root processed compared with 7.6 l/kg (from the data available in Thailand), and process less root each day. Washwater makes up from 7 to 16 per cent of the total combined waste flow in both types of tapioca starch plant.

A survey was made of representative tapioca starch plants in Thailand in terms of sources of wastewater (1). "The average characteristics and UMER (Unit Mass Emission Rate) values obtained for different wastewater effluents from first-grade tapioca starch factories are presented in Table 1. Designations A, B and C refer to effluents of wastewater as shown in Figure 1. (Utilising an average of 200 metric tons of tapioca roots as daily input to a first-grade factory, an estimated 5960 kg BOD_5 and 3140 kg

* This method of waste disposal is similar to that seen in a Sago starch mill in Indonesia (6).

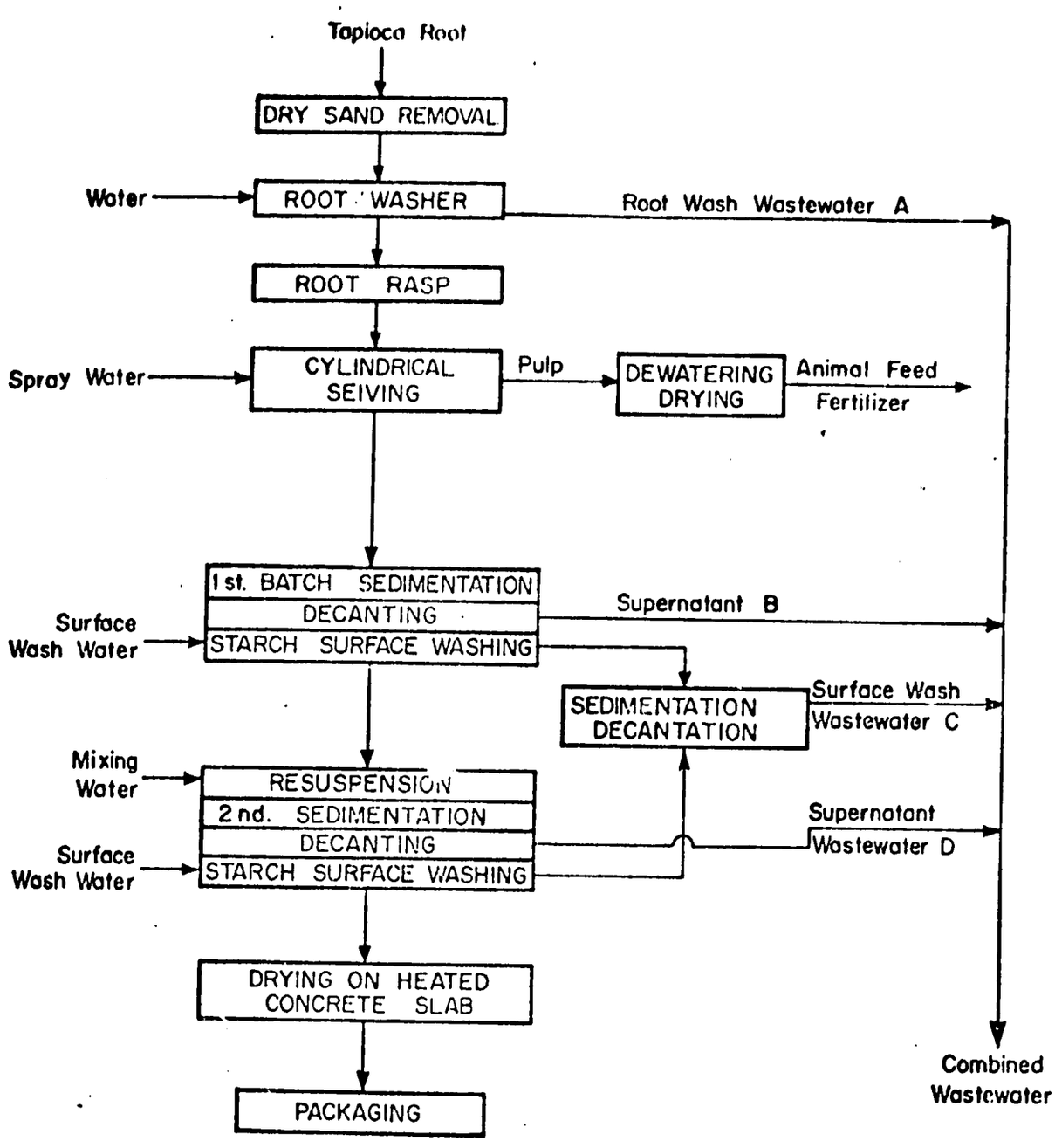

Figure 2.

Second-grade Tapioca Starch Process (1)

suspended solids were discharged in wastewaters each day.) In the same survey, three second-grade tapioca starch refineries were also studied, and wastewater characteristics and UMER values reported as in Table 2 (A, B, C and D refer to wastewater sources shown in Figure 2). A plant processing 30 tons of roots per day was estimated to discharge 1095 kg of BOD_5 and 1140 kg of suspended solids to the environment each day. Root washwater contained lower concentrations of BOD_5 and COD than the supernatant or separator wastewaters. Wastewater flow volumes discharged were of high variability and depended upon the availability and quantity of raw material and plant production."

TABLE 1. FIRST-GRADE TAPIOCA STARCH WASTEWATER CHARACTERISTICS (1)

Characteristic		Wastewater concentrations			
		A	B	C	Combined wastewater
COD	mg/l	929	11 200	3 210	8 210
BOD_5*	mg/l	446	5 380	1 540	3 940
Suspended solids	mg/l	738	2 140	1 996	1 970
Suspended solids - volatile	mg/l	465	2 120	1 653	1 840
Dissolved solids	mg/l	6 637	9 400	5 128	8 070
Dissolved solids - volatile	mg/l	5 952	5 880	4 423	5 530
Flow**	l/sec	1.49	9.92	3.76	15.2
		UMER values g/kg root			
		A	B	C	Combined wastewater
COD		0.69	55.2	6.0	62.0
BOD_5*		0.33	26.5	2.9	29.8
Suspended solids		0.54	10.5	3.7	15.7
Suspended solids - volatile		0.34	10.4	3.1	13.8
Dissolved solids		4.91	46.3	9.6	60.8
Dissolved solids - volatile		4.40	29.0	8.3	41.7

* Based on a BOD/COD ratio of 0.48

**For an average input of 7.2 tonnes of root per hour

TABLE 2. SECOND GRADE TAPIOCA STARCH PLANT WASTEWATER CHARACTERISTICS (1)

haracteristic	Unit	Plant 1 A	Plant 1 B	Plant 1 D	Plant 1 Combined waste-water	Plant 2 A	Plant 2 B	Plant 2 C	Plant 2 Combined waste-water	Plant 3 A	Plant 3 B	Plant 3 C	Plant 3 Combined waste-water	Combined waste-water average
ow	l/kg root	1.43	6.8	0.5	8.7	0.379	4.22	0.525	5.1	0.372	4.27	0.508	5.2	6.3
$)D_5$	mg/l	1 290	6 600	4 200	5 140	1 790	6 830	1 970	5 990	2 460	6 600	2 450	5 835	5 655
›tal solids	mg/l	2 913	15 012	4 460	12 468	4 408	11 004	3 712	9 815	7 012	10 292	3 742	9 320	10 534
›tal suspended solids	mg/l	2 185	12 280	1 152	10 023	2 496	2 650	2 540	2 640	1 762	2 650	2 540	2 550	5 071
›tal volatile solids	mg/l	1 823	11 276	2 992	9 285	2 243	6 008	1 529	5 295	3 148	5 856	2 069	5 240	6 606
	-	-	-	-	-	6.2	6.7	4.8	6.5	5.6	5.2	4.1	5.1	5.8

:haracteristic	Unit	UMER values A	UMER values B	UMER values D	Combined waste-water	UMER values A	UMER values B	UMER values C	Combined waste-water	UMER values A	UMER values B	UMER values C	Combined waste-water	Combined waste-water average
$)D_5$	g/kg root	1.8	44.8	2.1	48.7	0.68	28.8	1.0	30.5	0.91	28.2	1.2	30.3	36.5
›tal solids	g/kg root	4.2	102.8	2.2	109.2	1.70	46.4	1.9	50.0	2.6	43.9	1.9	48.4	69.2
›tal suspended solids	g/kg root	3.1	83.5	0.6	87.2	0.95	11.2	1.3	13.5	0.66	11.3	1.3	13.3	38.0
tal volatile solids	g/kg root	2.6	76.7	1.5	80.8	0.85	25.3	0.8	26.9	1.2	25.0	1.0	27.2	45.0

TABLE 3. PHYSICAL, CHEMICAL AND BIOLOGICAL CHARACTERISTICS OF TAPIOCA STARCH WASTEWATERS (1)

Characteristic, mg/l (except as indicated)	2nd-grade starch wastewater				1st-grade starch wastewater		
	Washwater		Supernatant		Plant A		Plant B
	Range	Mean	Range	Mean	Separate waste	Washwater	Combined wastewater
BOD_5	300 - 2 490	1 192	1 720 - 6 820	4 148	3 000 - 4 000	200 - 1 700	5 550 - 7 400
COD	613 - 6 110	2 696	4 704 - 10 010	7 584	3 100 - 900	2 000 - 4 850	13 300 - 500
Suspended solids	290 - 4 240	1 880	470 - 1 710	855	1 480 - 8 400	400 - 6 100	1 970 - 3 850
NH_3-N	0 - 7.8	1.9	1.2 - 35.0	15.6	0 - 4.7	0 - 1.1	-
Org-N	0 - 67.2	32.1	4.3 - 109.2	68.8	19.0 - 38.9	14.5 - 18.2	86.0 - 115
Phosphorus	0 - 6.0	3.6	0 - 10.5	6.6	5.6 - 8.5	1.2 - 1.3	-
T.D.S.	32 - 6 956	2 749	3 892 - 16 392	9 388	-	-	-
pH	3 - 4.6	4.2	2.6 - 4.0	3.4	3.4 - 4.2	4.2 - 7.1	3.8 - 5.2
D.O.	0 - 4.9	2.7	0 - 2.7	1.0	-	0.6 - 5.3	-
Acidity	-	-	-	-	668 - 860	19 - 223	135 - 1 010
Settleable solids, mg/l	-	-	-	-	60 - 200	10 - 100	48 - 115
Temperature, °C	-	-	-	-	28.5 - 33	28 - 31	30 - 31

Detailed descriptions of the physical, chemical, and biological characteristics of tapioca starch wastewaters are provided in Table 3. The total COD and BOD_5 concentrations in all wastewater streams vary over a wide range. The combined waste is acidic in nature, its pH ranging from 3.8 to 5.2 resulting from the addition of sulphuric acid in the extraction process and also from the release of some prussic acid by the tapioca roots. Tapioca starch wastewater contains a very high organic load and has relatively low nitrogen and phosphorus concentrations (1).

V. Waste Treatment

In terms of quality, there is little difference between wastes from the two types of factory but there is a significant difference in quality between wastes from the different sources within a factory. "Root washwater contains mainly cork cells, sand and clay particles which are derived from washing of the raw roots in the wash tank. Care is taken to ensure that no clay or sand particles enter the extraction process, especially during the wet season when roots retain more earth and require more thorough washing" (1). These solids are easily settleable and of much lower BOD_5 and COD than the separator waste. "Because of its lower organic strength and flow rate, washwater is much less a problem in treatment than separator or starch supernatant waste from a tapioca starch factory. It may, of course, be treated in combination with the separator or starch supernatant waste but normally it will be advantageous to treat them separately. Plain sedimentation was sufficient to produce an effluent suitable for reuse in root washing. However, during the wet season when the organic load of the waste is increased, chemical coagulation followed by sedimentation is a possible method of treatment which might produce a treated waste suitable for re-

cycling in the process. "Recycling of treated washwater is a desirable objective in any tapioca starch factory" (1).

"The principal problem in handling wastes from a tapioca starch factory is treatment of separator or starch supernatant wastes, which are very similar in quality. Plain sedimentation of these wastes can be used to remove gross suspended solids and reduce the levels of BOD_5 and COD. Settled separator or starch supernatant wastes, although high in BOD_5 and COD concentrations, are readily degradable using biological means. If the combined factory waste is to be treated, the processes outlined herein for separator or starch supernatant waste will apply equally to the combined waste" (1).

A. Primary Sedimentation (1)

As already mentioned, wastewater from the tapioca starch separator contains large amounts of solids, of which over 80 per cent will settle. This indicates that a large portion of the solids and significant amounts of organic matter present in the waste could be removed by ordinary sedimentation.

In tests after one hour holding time suspended solids removal ranged from 88.8% to 97.8%, BOD_5 removal from 52.5% to 79.5%, and COD removal from 62.0% to 80.2%. These results indicate that plain sedimentation is an essential first-stage process in treatment of this waste and will be highly efficient not only in solids removal but also in removing organic material, thereby reducing the load on subsequent biological treatment processes.

B. Biological Treatability (1)

"The effluent from primary sedimentation of the raw separator wastewater will still contain relatively high concentrations of BOD_5 and COD and some suspended solids. Its direct discharge to a stream would certainly

give rise to pollution problems and some form of secondary treatment of the waste is necessary. A laboratory study of batch activated sludge treatment of settled separator waste, showed that it was possible to achieve an overall COD reduction of 70 per cent after approximately 20 hours of aeration. With proper nutrient addition and pH control, the COD removal was found to go as high as 90%. During these studies, it was found that yeast predominated in the activated sludge."

C. Anaerobic Treatment (1)

"In view of the type of wastes, need for low cost treatment and the availability of land in rural areas where tapioca starch is processed, it is likely that anaerobic ponds will be the simplest and cheapest anaerobic form of treatment for this wastewater in most cases. Anaerobic digestion in concrete tanks or the use of the anaerobic contact process in more sophisticated forms of anaerobic reactor would not be suitable for adoption by this industry at the present time. Therefore, a rational basis for the design of anaerobic ponds is necessary and estimates of performance are desirable if the overall cost of treatment is to be minimised. Anaerobic processes are known to be effective in treatment of concentrated organic wastes but do not achieve an effluent quality suitable for discharge to a receiving water. A final aerobic stage of treatment is usually necessary but the volume of aerobic reactor and cost of aeration equipment (if used) are considerably reduced as a result of the prior anaerobic removal of organic matter. If oxidation ponds are adopted for the aerobic (or facultative) process, the total area of land needed for complete treatment of tapioca starch waste will be much less when anaerobic ponds are adopted as first-stage treatment."

At the present time, there are too few results available on which

to base a formulation of the effect of detention period on anaerobic pond performance in treatment of tapioca starch waste. They enable general conclusions to be drawn. Increased detention time at any particular BOD_5 loading results in increased BOD_5 removal efficiency, the magnitude of the increase being greatest at high loadings. The highest possible areal BOD_5 loading at any particular detention period will give the greatest areal BOD_5 removal efficiency, providing pond pH does not become limiting. In practical terms, for anaerobic pond treatment of tapioca starch waste with a particular BOD_5 concentration, applying the raw waste at the maximum areal BOD_5 loading which will permit pond pH to remain above 6.0 in the tropics will give the highest areal BOD_5 removal efficiency. Waste dilution through recirculation or other operational technique will reduce detention time and hence can be expected to adversely affect areal BOD_5 removal.

D. Oxidation Pond Systems and Aerated Lagoons (1)

1) Facultative oxidation ponds: Oxidation ponds have long been known to be a lost-cost and reliable method of wastewater treatment but they take up significant areas of land. It is possible to use facultative oxidation ponds as sole treatment for a waste or, as might be more applicable in the case of tapioca starch waste, as secondary aerobic treatment after first-stage anaerobic ponds.

A study was made of the performance of facultative ponds as the third stage treatment of tapioca starch separator waste, after two stages of anaerobic ponds. Two facultative ponds operated in parallel, each receiving effluent from two anaerobic ponds. The facultative ponds were operated at BOD_5 loadings of 1070 kg/ha day (960 lb/acre day) and 650 kg/ha day (580 lb/acre day) with detention periods of 5.52 and 9.25 days; BOD_5 removal efficiencies were, respectively, 40 and 47.5 per cent. However, when the

pond effluents were filtered before determining BOD_5, the removal efficiencies were 67.6 and 75.8 per cent indicating that significant portions of BOD_5 concentration to these ponds averaged 990 mg/l and so the effluents from the third-stage facultative ponds were still not suitable for discharge to surface waters and another stage of facultative ponds would probably be necessary.

2) Aerated lagoons: When the simplicity and low cost of oxidation ponds are desirable but land is scarce or costly it is often possible to use the pond type of construction for a higher rate aerobic treatment, taking up less land. This system is termed the aerated lagoon and would be appropriate for the final aerobic treatment of tapioca starch waste after anaerobic ponds.

An experimental fully-mixed aerated lagoon was operated in treating the effluent from a first-stage anaerobic pond. The results show that aerated lagoons can be used with advantage to reduce the detention time and yet treat efficiently the effluent from anaerobic ponds to give a satisfactory level of final effluent which could be discharged to a receiving water.

The main advantage of using aerated lagoons over multi-stage oxidation ponds system is that land requirements are considerably reduced. However, the facultative pond system and the anaerobic pond aerated lagoon system were found to be closely competitive, based on monthly running costs taking into account land rental. The flow diagram of the two alternative systems are shown in Figure 3 for a combined tapioca starch wastewater flow rate of 500 m^3/day with mean BOD_5 concentration of 2740 mg/1. Running costs of the anaerobic/facultative pond system (alternative A) and the anaerobic pond/aerated lagoon system (alternative B) were estimated to be approximately 0.85 and 0.87 per cent, respectively, of the value of the starch produced by the factory.

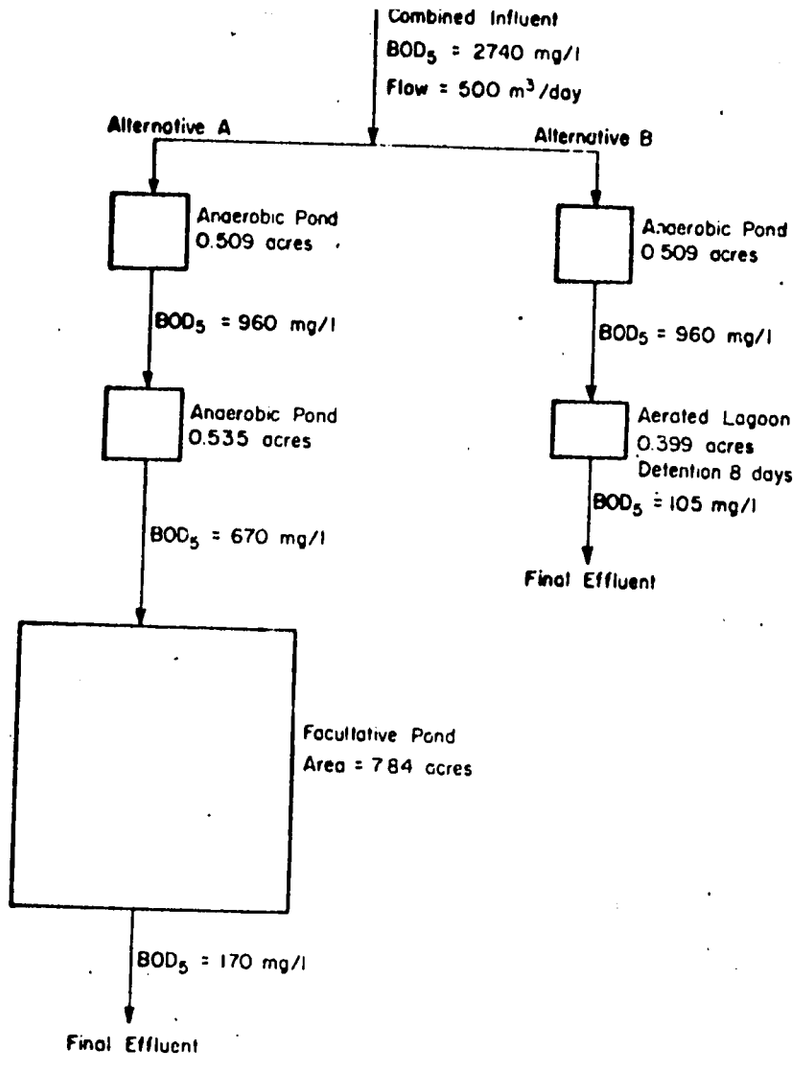

Figure 3. Flow Diagram Comparing Two Alternative Treatment Systems

E. Rotating Biological Drum Filter (1)

In recent years, the rotating biological filter has been developed for treating wastewaters from small communities and industrial plants, and it would appear to be a suitable form of treatment system for tapioca starch wastes. This type of treatment could be adopted as the sole biological process or it could be used after anaerobic ponds where land availability is limited. The rotating biological filter system seems to be a very promising treatment process for tapioca starch wastewaters. It is simple and highly

lexible in operation. In those locations where land is either not available or costly this system will have many advantages for small agro-industrial factories.

F. Production of Single Cell Protein

As a result of protein shortages, increasing interest has been shown towards the production of single-cell protein from organic wastes. The algae proliferating in facultative oxidation ponds treating tapioca starch wastes could be harvested and sold as single-cell protein but this is not considered economic at the present time. One other alternative is the production of yeast using tapioca starch wastewater as substrate and thereby achieving recycle of a useful protein by-product as well as accomplishing waste treatment. The main disadvantage of this, other than technical factors, is that a relatively sophisticated process needing careful control would be added to the tapioca starch factory and it is unlikely that small refineries could justify such a system (1). However, larger refineries, under increasing government pressure, may be able to justify this additional treatment cost as long as there is an available market for the SCP as animal feed.

Torula yeast has been grown on tapioca starch separator wastewater from a first-grade factory. It was found that Torula yeast could acclimatise and grow predominantly in the waste, reducing sugars and volatile acids being readily removed (1). Overall COD reduction was about 73 per cent and the yeast mass contained approximately 50 per cent protein with a yield of 0.5 kg yeast per kg COD removed. However, nitrogen was required as supplementary nutrient at a level of 1 kg nitrogen per 50 kg COD removed. When the yeast was grown in non-enriched waste, the protein content of the yeast decreased significantly. The effluent from yeast treatment of the waste still contained a relatively high residual COD and would require further conventional

aerobic biological treatment before discharge.

The Symba process was developed and is currently in use in Sweden by the Swedish Sugar Company to produce SCP from starch waste (3). There are two microorganisms that exist symbiotically in a continuous fermentor. These are an Endomycopsis species which is able to hydrolyze starch and Candida utilis which can use the starch hydrolysis products. This process is designed for starch based raw materials and might be able to work with tapioca wastewaters. Literature from Chemap AG Mannedorf, Switzerland indicates 85-90% BOD_5 removal and also gives the following date shown in Table 4.

Table 4

Symba Process
Example 'Felix' Plant, Sweden (13)

Substrate concentration	3% D.S. (starch)
BOD_5 Entry	20 000 mg/l
BOD_5 Exit	2 500 mg/l
Purification effect	85–90%
Liquid dilution rate	0,1 (approx. 10 hours residence time)
Cell production	1,05 kg/m³/h D.S.
Protein content of D.S.	47%
Yield of D.S.	40–50% of the entry (according to substrate)
Microorganisms	Candida-Yeast + Endomycopsis fibuliger
Plant 300 m³ produces	Approx. 300–400 kg Yeast D.S./h

Although both organisms exist in the fermentor simultaneously, 90% of the total mass is C. utilis which is an acceptable food yeast. The starch and organic content as indicated by BOD_5, of the tapioca starch wastewaters might be too low for this process and thus prior concentration by ultrafiltration or reverse osmosis might be feasible.

VI. Cassava Press Water

ITAL (Institute de Technologia de Alimentos) in Brazil (7) has been growing *Aspergillus oryzae* using cassava press water as substrate. Table 5 shows the results of treating these wastes under aseptic conditions which leads to a human grade product. The results show that the pH rose slightly above neutrality, which is desirable, and that all the other polluting parameters were reduced by at least 60%. The BOD was reduced by 76.7%, 73% of which was converted into fungal mass containing 40% protein. Thus, 45,000 tons of mycelia could be produced annually from the combined waste-waters of cassava processing plants in Brazil.

Table 5

Chemical Analysis of Cassava Press Water Before and After Fungal Digestion (7)

Analytical Procedure	Before Treatment	After Treatment 68 h	% Reduction
	g/l		
COD	15.0	5.0	66.7
BOD	10.5	2.45	76.7
Total solids	18.2	7.00	61.5
Carbohydrate	7.0	1.98	71.8
Total Nitrogen (Kjeldahl)	0.030	0.025	69.0
Total Phosphate	0.43	0.15	65.0
pH (units)	4.2	7.7	
Fungal mass	-	6.3	

VII. Stillage from Cassava Based Alcohol Production (5)

As previously mentioned Brazil is considering the production of alcohol by cassava fermentation. As with molasses fermentation to alcohol, a highly polluting stillage is produced, the composition of which is shown in Table 6. Centro de Tecnologia Promon foresees that this stillage will be treated by secondary and as yet undefined treatment. Anaerobic fermentation of the stillage produces methane which will particularly complement the requirements for external fuel in cassava alcohol distilleries.

VIII. Summary and Conclusions

Wastewaters from the tapioca starch industry are highly polluting and constitute a major source of surface water pollution in regions where the crop is processed. Particularly in Thailand, there is increasing government concern about and interest in controlling the adverse environmental effects. Malaysia has also expressed concern, and Brazil is aware of the pollution resulting from cassava press waters. Because of the size of the industry and prior and present work in treating and using tapioca starch wastewaters, Thailand would appear to be a suitable country in which to conduct pilot studies on utilization of these effluents.

With regard to treatment, segregation of washwater from separator wastes are recommended with sedimentation being used to treat the washwater. At times when the organic content of the settled washwater is high, chemical treatment before sedimentation would often produce a satisfactory effluent. The treated washwater can be recycled and recovered solids used as animal feed.

There is a range of alternatives for treating the separator wastewater from first-grade plants or the sedimentation tank supernatant from

Table 6

Stillage Composition (5)

COMPONENTS	STILLAGE FROM CASSAVA ROOTS (ℓ)
Total Solids	2,40
Organics	2,18
Minerals	0,22
Reducing Sugars	0,68
CHO	1,16
Nitrogen (Kjeldahl)	0,04
Raw Protein (Nx6,25)	0,25
Protein (biuret)	0,23
Ashes	0,23
pH	5,0
Glicerol	0,73
Gums	0,60
Fibers	0,014
Fats	0,003
Waxes	0,010
SiO_2	0,003
Fe_2O_3	0,030
Al_2O_3	0,010
CaO	0,009
MgO	0,009
P_2O_5	0,020
Na_2O	0,009
K_2O	0,110
NaCl	0,011
$SO_4^{=}$	0,006
MnO	0,005
Iodine	Nihil
Copper	Traços
BOD_5 20ºC	1,89
COD	2,34

from second-grade plants, which are very similar in nature. Because of their very high BOD_5 and COD concentrations, these wastes are amenable to anaerobic biological treatment and anaerobic ponds are an effective first-stage treatment process. Following treatment in either a single pond or multiple stages of anaerobic ponds in series, the effluent will require further aerobic biological treatment before being suitable for discharge. The choice of aerobic process will depend principally upon the cost and availability of land near the factory. If land is available and cheap, facultative oxidation ponds will be the cheapest form of aerobic process and probably two stages of ponds would be necessary. Where land is more costly or scarce, aerated lagoons should be adopted as the aerobic process for treatment of effluent from the anaerobic ponds. Rotating biological filtration is also a high-rate aerobic process which is suitable for treating either the effluent from anaerobic ponds or the settled raw tapioca starch waste and should be considered when land utilisation must be minimised. It is possible with all these forms of treatment system to include primary sedimentation but this would normally only be economic when anaerobic ponds are used if the settled solids can be sold as animal feed. If a rotating biological filter or other aerobic treatment process were to be adopted as sole biological treatment, primary sedimentation would be necessary as a first stage (1).

Single cell protein (torula, endomycopsis) for animal feed and possibly human usage can be grown on tapioca starch wastewaters. The constraints on the utilization are

- diluted effluents, possibly necessitating concentration by membrane systems prior to fermentation
- need for supplemental nitrogen and possibly phosphorus

- systems which are too complex for rural-agro industry in developing countries
- necessity for additional waste treatment after yeast growth

At a recent UNEP/FAO seminar (14), it was suggested that this situation with regard to SCP production could be overcome by developing technologies capable of being used at local levels and at low level production plants such as those with 2 to 5 tons of cassava per day processing capacities (14). If the feed lot operation can be integrated with the starch plant, marketing, transportation and possibly drying costs can be minimized or even eliminated. However, the above constraints militate against this form of waste handling for tapioca starch factories. Perhaps in the future, if protein becomes in very short supply, very large tapioca starch refineries could produce Torula yeast as part of their wastewater treatment system, but the present conditions in rural factories do not provide the environment for such developments in the short term (6). In Thailand, which is an exporter of animal feed, there is thus no current incentive to produce SCP from tapioca starch wastewaters.

Algae can be grown on the tapioca starch wastewaters remaining after fermentation or other treatment, and either harvested for animal feed or used in adjacent fish ponds. However, because of harvesting and mixing requirements, the costs may be too high and the system too complex for rural agro-industry (11). Marketing the algae as animal feed might also be a problem because feed producers are used to handling and using fish meal, but not algae.

Using the effluents to directly grow fish in ponds or to produce algae which overflow to adjacent fish ponds might be a better application than algae for animal feed. Direct use of algae grown on wastes for fish

feeding in adjacent ponds avoids the costs of algae harvesting. Final effluent after the fish pond should have a BOD of about 20 ppm (11). With respect to rural agro-industry, this can be a profitable way to use food production wastes. Fish are highly nutritious and since fish are not a new product, it would be acceptable to local people, thereby eliminating marketing problems. Transportation problems should also be minimized since consumption can be at a local level. Fish ponds are also simple and local capability to operate them is available.

"The solution to the problem of tapioca starch wastewater treatment needs to be appropriate for the economic situation of this industry and should take advantage of local environmental conditions. Unfortunately the economics of the tapioca starch industry are such that it is unlikely that factories could adopt sophisticated waste treatment processes utilising expensive equipment and therefore low-cost methods are essential. An additional incentive to adopt simple wastewater treatment methods is the inadvisability of adding a complex waste treatment process to a factory where essentially simple processes are used and skilled operating staff are not available. These conditions apply to many agro-industries in developing countries and the general need for rational local solutions is apparent" (1).

REFERENCES

1. Pescod, W. B., Nguyen Cong Thanh, "Characteristics and Treatment of Tapioca Starch Industry Wastewaters", Proc. Agro-Industry Waste Sympos., Kuala Lumpur, 1975.

2. Bharat Bhushan, "Agricultural Residues and Their Utilization in Some Countries of South and Southeast Asia", Industry Sector Seminars, Residue Utilization - Management of Agricultural and Agro-Industrial Wastes, UNEP/FAO, Rome 18-21 January 1977.

3. Barnett, Stanley; Nystrom, John; Dunlap, Charles, AIChE-AID/LIFE Survey Team II, Oct. 23-Nov. 17, 1976.

4. Dr. Nga Been Hen, Botany Department, University of Singapore.

5. Centro De Tecnologia Promon, CTP. "Casava Fuel Alcohol - a Multi-Client Study", CTP Newsletter Vol. 2, No. 1, Feb. 1977. (Correspondence with Dr. Marvin Fleischman from Carlos Costa Ribeiro, PhD, CTP, Avenida Rio Branco, 103-20°. andar, 2000 - Rio de Janeiro, RJ., Brazil.

6. Fleischman, M., Steinkraus, K. H., Meade, R., AIChE - AID/LIFE, First Site Visit, July 27 - August 21, 1976.

7. Tobias Jose Barreto de Menezes, Paulo De Lamp, Tomaz Arakaki, "Fungal Protein From Cassava and Stillage Waste Waters", (Correspondence from Agide Gorgatti Netto, Director General, Instituto De Tecnolgia De Alimentos, Compinas, SP-BRASIL, AV. Brasil, 2880, to Dr. Marvin Fleischman, March 25, 1976).

8. Dr. Phrom Panitchpakdi, National Environmental Board, Bangkok, Thailand.

9. Applied Scientific Research Corporation of Thailand, 196 Phahonyothin Road, Bangkhen, Bangkok 9, Thailand.

10. Dr. James Blackledge, Denver Research Institute, 2199 South University Boulevard, Denver, Colorado.

11. Dr. W. B. Pescod, Environmental Engineering Div., Asian Institute of Technology, Bangkok, Thailand.

12. Tate & Lyle, Group Research and Development, Philip Lyle Memorial Research Laboratory, Whiteknights, Reading, Berks RG6 2BX. Annual Report 1975, p. 12 and 21.

13. Chemap, AG, Mannedorf, Switzerland.

14. "Residue Utilization - Management of Agricultural and Agro-Industrial Wastes", Report of the UNEP/FAO Seminar on Residue Utilization - Management of Agricultural and Agro-Industrial Wastes, Rome, 18-21 January 1977.

15. Gregory, K. F., Reade, A. E., "High-Temperature Production of Protein-Enriched Feed from Cassava by Fungi", Dept. of Microbiology, University of Guelph, Guelph, Ontario, Canada N1G 2W1.

COCONUTS

The major countries which produce coconuts are the Philippines, Sri Lanka, India, Indonesia, Malaysia, Mexico, New Guinea, and Thailand (1 2). The Philippines is the leader in coconut production, supplying 33% of the world's total production (3, 4) and Sri Lanka is second. Ivory Coast is expanding their coconut production to export more copra. Total production of coconut in the world is about 30 x 10^9 nuts per year (3).

The above statistics show that coconut which is good source of protein, is readily available in countries where protein deficiency prevails (5). The uniqueness of coconut protein is that it is relatively high in methionine, an amino acid often deficient in plant proteins (6). Because the main emphasis in these countries is to produce copra, coconut oil and use for domestic consumption, none of these usages results in an optimal utilization of the available coconut protein.

I. Coconut Trees (Sri Lanka - Coconut Research Institute)

Coconut trees begin bearing after five years and continue for 60 years on the average, though some bear for 100 years or more. The average yield is 50-60 coconuts/tree/year, but some will yield up to 120 nuts/year. Ordinarily, the tree will grow one frond and one coconut bunch per month. Twelve months are require for a coconut bunch to ripen and be ready to pick. On the average, nuts are picked every two months. May and June are the best months, however, and 25% of the coconut are obtained during this period. The coconuts will not spoil if they remain on the tree too long, although they may sprout.

If the coconut trees are set too close together, they will not bear, and if they are too far apart the total yield per acre is poor. At 190 trees/acre the yield will be one nut per tree per month. The optimum spacing is 64 trees/acre, where the yield is 5 nuts/tree/month. Because of the necessary wide spacing of the trees, attempts are being made to develop a crop which can grow between the trees. The best to date is grass for pasture.

Coconut blossoms can be pierced and sap containing about 15% sugar will extrude at the rate of about 2 1/2 pints/tree/day. Since the blossoms are high in the air, aerial ropeways are made, which enable one man to collect the sap from 60-70 trees/day. Individual blossoms can be kept extruding syrup for as much as 2 to 3 months, and since each month a new blossom forms, a tree can easily produce 100 lb./year of sugar. The fresh sap is known as sweet toddy and readily ferments to an alcoholic beverage, toddy, which when distilled gives arrack. Currently the still bottoms are unused. The trunks of the coconut trees contain a soft center which can be readily scraped out. The hollow trunk is thick enough that 2 x 4 lumber for studding and rafters can be cut from it. However, it is so hard that it is difficult to work, for it quickly dulls carpenter's tools. Also, it has a peculiar grain with needle-sharp fibers which are very objectionable. Because the fibers are so long, the wood cannot easily be worked crossways.

The fronds are used for house roofs and fuel and an attempt is being made to use them as match sticks.

The nut weighs approximately 1 kg. Of that, about half is husk, 200-250 g is shell, 200-250 g is meat (copra), and 150-200 g is coconut water from the center. The copra when dried weighs roughly 80 g and is about 62% oil. Therefore one acre of coconut trees yields approximately 500 lb/yr oil and 300 lb/yr oil-free cake (poonac).

II. Components of the Mature Coconut and its Composition

The structure of the mature coconut is shown in Figure 1 and the weight composition given in Table 1.

TABLE I

Weight Composition of Coconut Parts (7)

Husks	-- 28%
Shell	-- 19%
Meat	-- 36%
Coconut Water	-- 17%

Husk: The outermost fibrous part of the coconut which consists mainly of (7) fiber (43 wt %) and lignin (43 wt %), offers very little nutritional value.
Shell: Has a very hard and tough fibrous cover and its composition is shown in Table II.

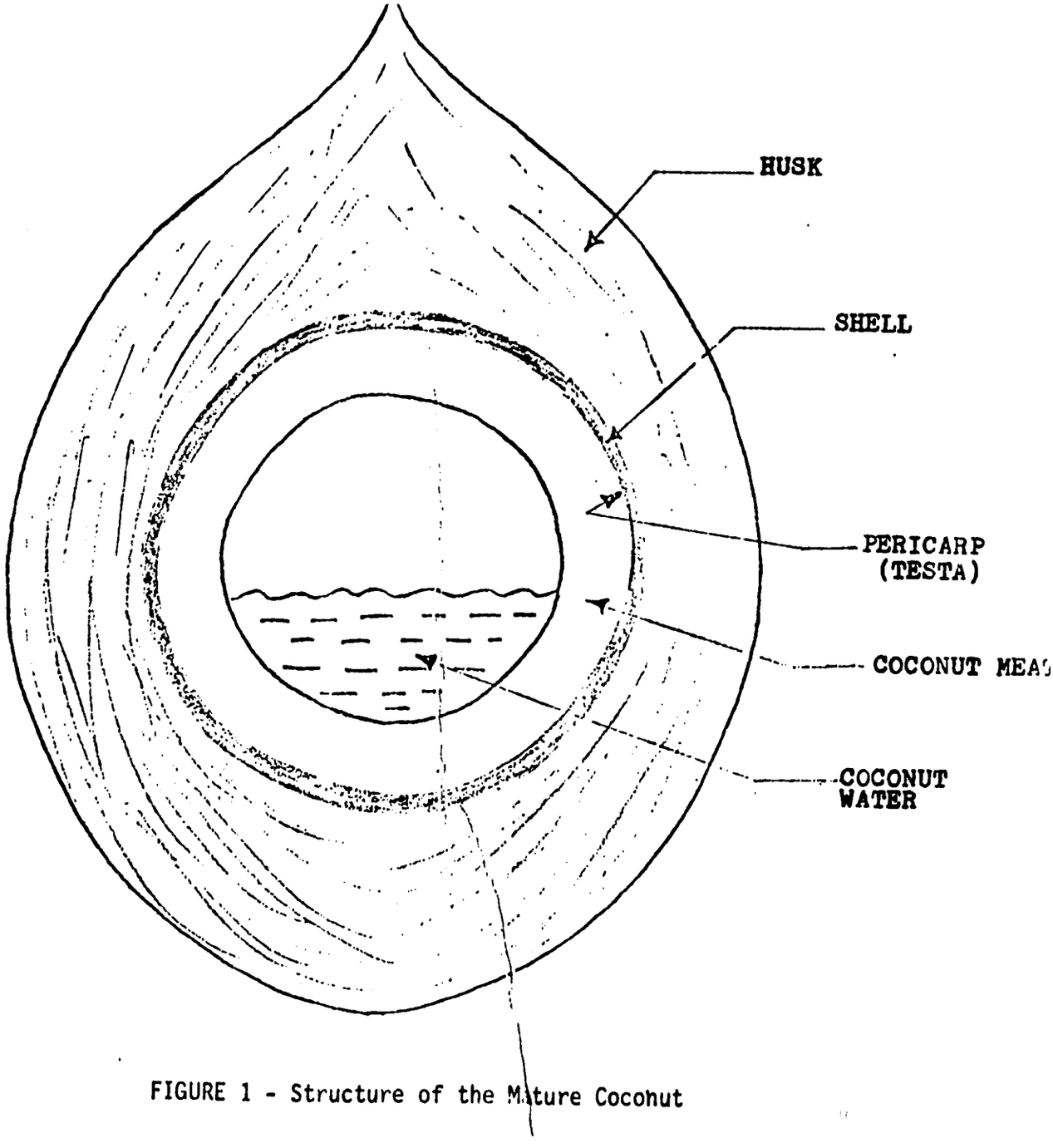

FIGURE 1 - Structure of the Mature Coconut

TABLE II

Composition of Coconut Shell (8)

Moisture	-- 8% (wt)
Ash	-- 0.6%
Solvent Extractives	-- 4.2%
Lignin	--29.4%
Pentosane	--27.2%
Uronic Anhydrides	-- 3.5%
Cellulose	--26.6%
Methoxyl	-- 5.6%
Nitrogen	-- 0.11%

Testa is the outer thin layer or skin, over the kernel or coconut meat and the composition of testa meal (after removal of testa by paring) is shown in Table II Testa is 12-15% by weight of the kernel (9).

TABLE III

Composition of Testa (g/100g)

Moisture	-- 4.8
Protein	-- 17.2
Fat	-- 7.9
Ash	-- 4.7
Carbohydrates	-- 65.3
Thiamine	-- 0.717 mg/100g
Niacin	-- 4.47 mg/100g
Raw Fiber	-- 10%

Kernel or coconut meat composition is shown in Table IV.

TABLE IV

Composition of Coconut Kernel (10)

Moisture	-- 52.5% (wt)
Ash	-- 2.5%
Crude Fiber	-- 9.4%
Protein	-- 8.4%

Coconut Water - The composition of coconut water is shown in Table V. Since this material has an environmental impact, certain water pollution parameters are shown in the analysis. Vitamin content and amino acid profile of coconut water are shown in Table VI.

TABLE V

Composition of Coconut Water (11, 12, 13)

Nutrient	g/100 ml. of coconut water
Moisture	90.58
Protein	0.33
Fat	0.928
Ash	0.62
Crude Fiber	0.0
Carbohydrate	3.54 (g/100 g)
Total Solids	4.71
Total Sugars	2.08
Calcium	14.1 (mg/100 g)
Phosphorous	6.4 (mg/100 g)
Iron	0.3 (mg/100 g)
Thiamine	0.002 (mg/100 g)
Riboflavin	0.006 (mg/100 g)
Niacin	0.06 (mg/100 g)
Suspended Solids	1,100 ppm
Dissolved Solids	28,060 ppm
Total Volatile Residue	18,600 ppm
BOD	14,000-15,000 mg/l
COD	30,000-40,000 mg/l
Specific Gravity	1.02
pH	5.6
Oil	0.74 g/100 ml

TABLE VI

Vitamin and Amino Acid Content of Coconut Water (12)

Vitamins Present in Coconut Water	
Ascorbic Acid	2.2-3.7 mg./100 ml.
Nicotinic Acid	0.64 microgms./ml.
Panthotenic Acid	0.52 microgms./ml.
Riboflavin	0.01 microgms./ml.
Folic Acid	0.003 microgms./ml.
Amino Acids Found in Coconut Water	
Glutamic Acid	14.5%
Arginine	12.75%
Lencine	4.18%
Lysine	4.51%
Froline	4.12%
Aspartic Acid	3.60%
Tyrosine	2.83%
Alanine	2.41%
Histidine	2.05%
Phenylalanine	1.23%
Serine	0.91%
Cystine	1.17%

III. Traditional Uses and Processing of Coconuts

Coconuts are primarily used for the following purposes:

- Domestic culinary purposes - coconut milk, coconut oil
- Copra manufacture
- Coconut oil from copra
- Desiccated coconut

Copra and Coconut Oil

Coconut is the raw material for copra (dehydrated coconut meat) which in turn goes into the manufacture of coconut oil. In the Philippines, Sri Lanka, and Thailand, copra is the main industrial use of coconuts.

Copra is produced at the home or village level by drying the coconut meat following dehusking and cracking the shell. The coconut water is usually wasted in the process, but is not of environmental concern since the plants are small and located in rural areas. A typical composition for copra cake is shown in Table VII.

TABLE VII

Typical Composition of Copra (14)

Components	Weight %
Moisture	-- 5-7
Crude Protein (N x 6.25)	-- 8-10
Oil	-- 60-70
Crude Fibre	-- 4-5
Carbohydrate	-- 10-13
Ash	-- 1-2

There are basically three methods for making copra (15):

- Sun drying
- Open kiln drying
- Machine drying

Sun drying of the open coconut halves is done on large plantations or in small villages. Exposure to the sun is for three to six days and there is a high chance of mold formation and insect infestation due to

- General unsanitary conditions
- Tropical climate which causes residual moisture to be present, thereby enhancing mold formation

It has been reported that 30% of the oil is destroyed in this traditional process of copra making (14).

In Sri Lanka, the opened nuts are spread on a concrete slab in the sun for about 2 hours, and then are dried for about 2 days on screens over a low fire in kilns down to 6 to 7% moisture, during which the meat shrinks sufficiently that it breaks free from the shell. The final dried meat in quarters and half nuts is packed in 120 lb. quantities in burlap bags for shipment. It is graded quite carefully for evidence of mold damage, as Aspergillus niger and Aspergillus flavus will attack the meat, discolor it, and impair the oil if it is not sufficiently dry. Another factor which is important is excessive heating or smoke damage during drying, which lowers the quality of the oil and the oil meal cake (protein denaturation (16)).

In kiln drying, shells and husks are burnt and the hot air is blown over the opened halves. In Sri Lanka, copra is sun dried for two hours before being transferred to the copra kiln (9). The high temperatures (sometimes 100 C) in the ovens result in protein denaturation (16). Kiln drying can lead to a clean copra which is used in India for flavoring and seasoning vegetables (17). Other human food usages of clean copra and copra cake (residue after oil extraction) in Sri Lanka and Indonesia have been reported. Many hot air driers, however, do not reduce the moisture level low enough and mold infestation occurs during storage of the copra prior to oil expression. Modern kiln drying, which is relatively rare, produces the highest quality of copra (15).

After collection, copra is then exported for production of coconut oil or sent to local copra mills. At the mill, coconut oil is obtained by mechanical expression or solvent extraction (hexane) of copra. Copra cake, the residue from expression may be solvent extracted to yield defatted copra meal. The raw coconut oil is refined to remove any free fatty acids formed during the oil extraction and is then used in the manufacture of cooking oils, soaps, and cosmetics. The residual oil after extraction of the copra cake ("poonac" in Sri Lanka) is used by the soap industry or for manufacture of fatty acids and glycerine (17).

A typical composition of copra cake is shown in Table VIII.

TABLE VIII

Composition of Copra Cake (7)

Moisture	--	11%
Oil	--	6%
Protein	--	19.8%
Carbohydrates	--	45.3%
Fiber	--	12.2%
Ash	--	5.7%

Generally, due to low quality, the copra cake or meal is not fit for human consumption and is used as supplementary feed for cattle, pigs and poultry. In Sri Lanka, sediment poonac is a residue recovered from filter pads of presses used for straining mill oil. The protein concent of sediment poonac (on an oil free basis) could be as high as 38.2% (dry weight). Hydraulic and expeller press poonacs range between 16.2% and 26.3% protein (9). More sanitary drying, storage, and processing could lead to human grade copra cake.

PROCESS FLOW DIAGRAM (BLOCK) FOR THE MANUFACTURE OF DESICCATED COCONUTS (12)

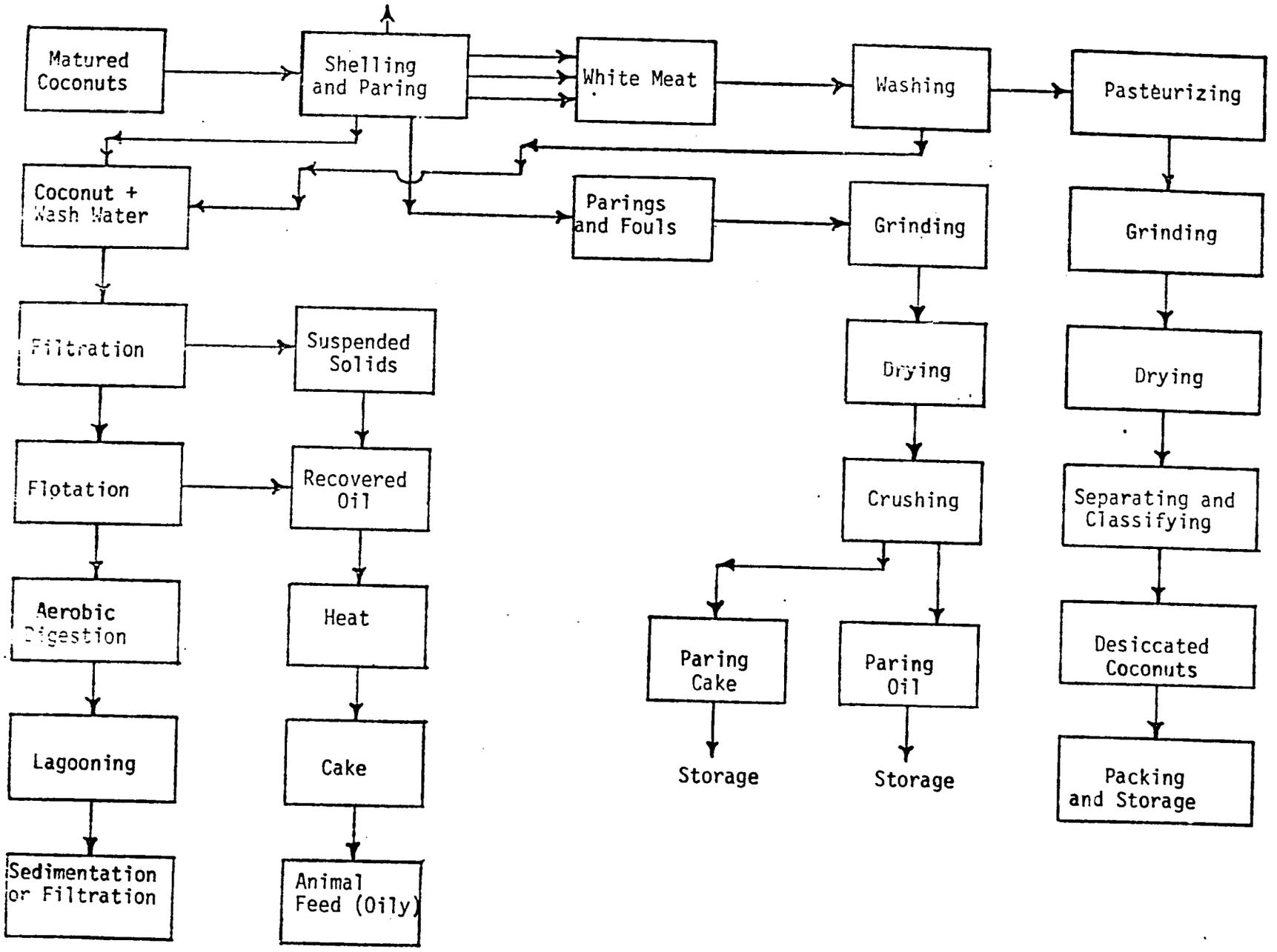

FIGURE - 3

MATERIAL BALANCE FOR

THE MANUFACTURE OF DESICCATED COCONUT (12)

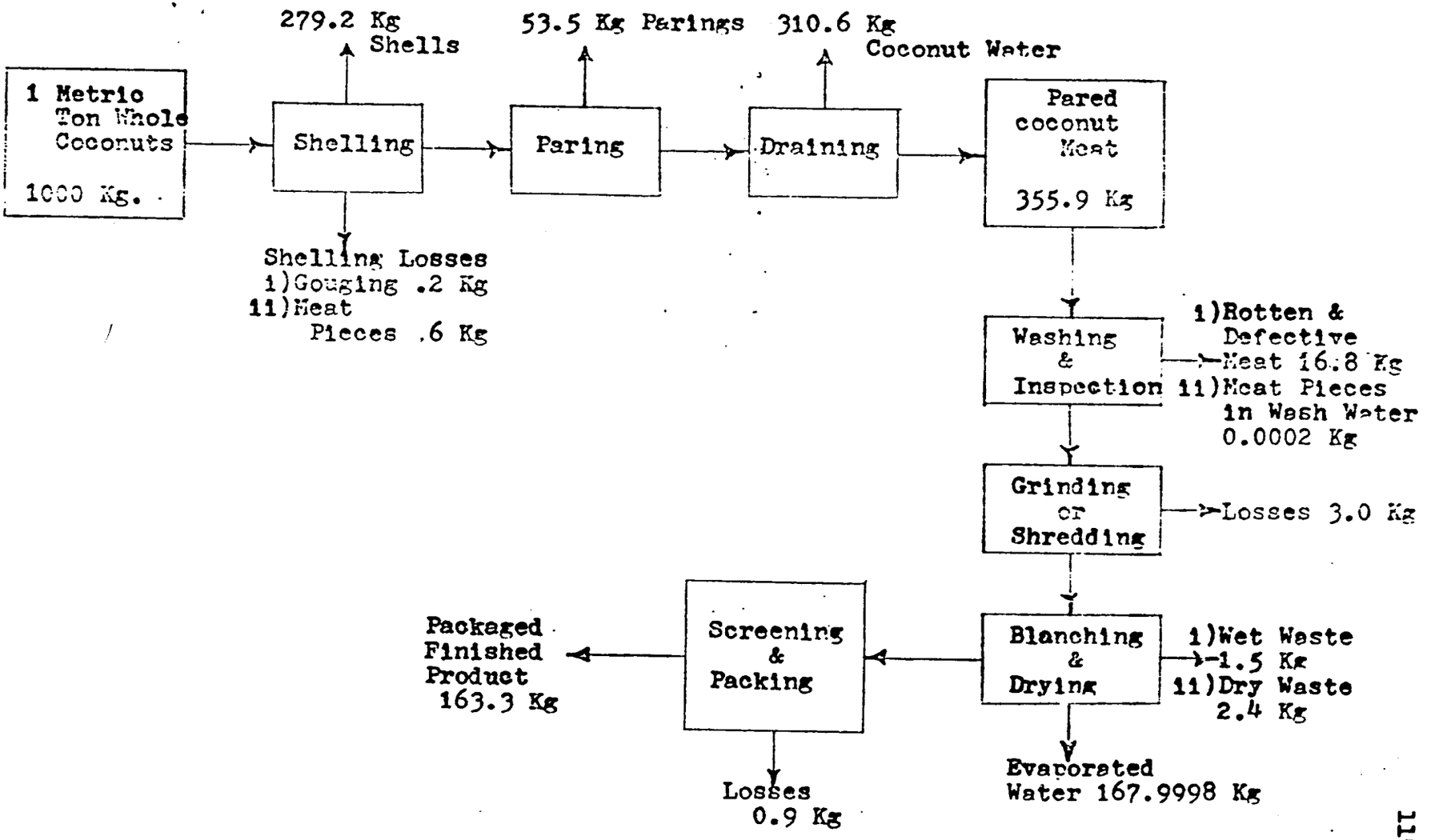

Desiccated Coconut

Desiccated coconut is produced primarily in the Philippines (100,000 metric tons per year) with smaller production in Sri Lanka and one plant in Indonesia. The raw material is fresh coconut and a process flow sheet is shown in Figure 2 (12) and a material balance summary in Figure 3. There is very little domestic consumption of the desiccated coconuts as the entire production is exported.

Production of shredded coconut is a much more exacting operation than the production of copra for it is intended for human food. The steps in Sri Lanka are:

1. Hulling

The coconuts from which the husk has been removed are carefully hulled by striking the shell a glancing blow with a hatchet-like tool. Part of the hull will break away from the brown skin over the meat. Considerable skill is developed in hitting the remaining attached pieces of hull to remove them without chopping into the meat portion, and an experienced and skillful operator can remove the shell completely with some 20 to 24 glancing blows and leave the meat with brown skin intact. She is expected to hull 2,200 nuts per eight hour day and for this she gets $1.15. The hullers operate from small bins and were kept supplied by several people carrying coconuts to them in baskets from a large pile about 200 feet away.

2. Peeling

The hulled coconut meat is covered with a brown branny peel which must be removed, otherwise it will impair the color and quality of the finished products. After hulling, the intact coconut is tossed to another operator, who removes the peel with a potatoe peeler-type knife set to cut a thin layer. The whole peeled nuts are then tossed into a tank where they are washed somewhat, and cut open by a third operator to release the water inside. The nut meat is cut in quarters and placed in iron baskets of about a bushel capacity and pasturized in boiling water for about 1.5 min. There is a rather unique device for controlling the time in the boiling water. A deeply threaded rotating shaft is suspended over the hot water bath which is approximately 6 feet long. The basket is hung on the shaft and as the shaft rotates, the basket moves fron one end of the tank to the other. The time of travel is considered adequate to pasturize the coconut pieces. The chief concern is about the presence of Salmonella.

3. Shredding

The pasturized pieces of coconut meat are placed in the barrel of a rotating knife and fed into the knife with a manual level operated by two men.

4. Drying

The shredded coconut meat, which consists of fragments about 1/8 in. x 1/8 in. by 1/2 to 2 in. long, is spread about 2 in. deep on trays and dried to 6% moisture by indirect heating 130 F air from a wood-fired furnace.

Two residues result from desiccated coconut manufacture: parings and coconut water. The parings or testa are removed before the meat is sent for washing and pasturizing. These parings contain a high amount of oil and protein as shown in Table III. Either at the desiccated coconut factory itself, or at separate paring

mills, paring oil is recovered by expression and/or extraction. Paring oil can be used for edible oil manufacture, e.g. filled milk in the Philippines or for soap manufacturing. The paring meal which remains after oil extraction generally goes to animal feed manufacturers. Though the composition of the paring meal is about the same as copra cake, it is generally believed to be better as stock feed because of higher vitamin content (9). According to the United Coconut Association of the Philippines, about 70% of the paring meal is exported and 30% is used domestically.

When the coconut is broken and pared, the coconut water spills onto the factory floor, from where it is washed into sewers. The washwater also goes to sewers and in some plants, both are dumped into waterways without further treatment. Where there is wastewater treatment prior to disposal, coconut water and washwater are treated together as shown in Figure 2. This will be discussed further in a later section.

Domestic Consumption of Coconuts

In the Philippines and Indonesia, a smaller usage of coconuts is in villages or individual homes to produce coconut milk or oil which is used for cooking and condiment purposes. In Sri Lanka, Thailand and other countries, this usage consumes the major proportion of coconuts.

The coconut is first opened, the meat scraped out, and then squeezed with water to produce coconut milk (called Santan in Indonesia). Coconut milk is an emulsion of water and oil. By letting the coconut milk stand for a while, a top layer consisting of oil and water results. Skimming off this layer yields a skim milk. In the Philippines a very popular dessert, "nata-de-coco", is made from skim milk and coconut water by growing a species of vinegar group of bacteria in sugared coconut skim milk and coconut water media (19).

A very popular cooking/frying oil, used by average households in Indonesia called "klentik oil" is prepared by boiling-off coconut milk (20), prepared as above. This type of oil preparation is usually carried out in villages employing three to five people, and is able to process 200 to 300 units per day. Husk and coconut shell are burnt to provide heat for the boiling process. Upon completion of the process, two types of products may be obtained, i.e. coconut oil (klentik oil) and oil residue or curd, which presumably consists of protein, carbohydrate and some minerals. After pressing, the curd may contain 7.5% oil and 13.8% moisture. This composition is shown in Table IX along with composition of forms of processed coconut.

TABLE IX

Composition of Coconut and its Residues (20)

Product	Protein %	Fat %	Moisture %
Fresh coconut meat	3.1	31.0	50.0
Copra	8.2	65.0	4.5
Copra cake 1/	28.0	18.0	12.0
Desiccated coconut meal 2/	18.6	2.0	15.8
Grated coconut residue 4/	6.9	24.7	7.2
Coconut oil residue 4/	22.2	7.5	13.6
Copra curd 5/	4.5	38.8	55.0

1/ cold pressed, 2/ after solvent extraction, 3/ after coconut milk separation, 4/ residue on evaporation of coconut milk, 5/ milk fermented with starter.

A common method used in Indonesia villages is the production of the so called "bachin oil" (20). In this process, the residue from klentik oil production is allowed to decay, espcially the protein fraction, which facilitates the liberation of the remaining oil when the dried-decayed product is pressed. This oil may be used only for industrial purposes.

As shown in Table IX, the residues from coconut milk and coconut oil production have nutritive value. However, these residues are largely wasted. In Thailand, they are used as chicken feed and occasionally used as animal feed elsewhere. For example, the residue from home preparation is used if there is a backyard piggery. Reportedly, in Ciamis, Indonesia, the residue is toasted and used as human food. Also in Indonesia, Semaji is prepared from residue and Bongkrek from copra cake by lactic fermentation (27). Both products are used for human consumption.

Generally, the coconut water which is released in grating the coconut is discarded. In India, the coconut water is drunk and reportedly also used for medicinal purposes (17). In the Philippines, when the nuts are grated at the market place, the coconut water is collected if there is a vinegar or nata processor who will buy the water regularly. Otherwise, the coconut water is discarded (13).

Coconut Flour

Production of flour directly from dried, ground fresh coconut meat and from residues has been and is currently of interest. Dr. Engle, Nutrition Adviser, USAID, indicated in a recent article in Export Adviser, (22) that the potential for producing coco-flour for domestic consumption and import was great in the

Philippines. About 400,000 metric tons per year of wheat flour which is currently imported to the Philippines, could be replaced. Dr. Engel's findings revealed that bread made from coconut-wheat flour mixture has the same nutritional value as pure wheat bread, and the appearance of the product is not affected. Coconut flour could also be used in various other products such as cereals.

At one time, a protein rich mixture (CMM) was produced from mung bean flour (60 parts), coconut flour (35 parts) and nonfat dry milk (5 parts) (23). This was intended to be used as a protein supplement for infants and pre-school children. Flour was made on an experimental basis from fresh coconuts by both Franklin Baker and Blue Bar. Noodle type products were also made with coconut meat, hexane extraction was used to defat the meal. Though this plant no longer produces coconut flour, hexane extraction is too expensive and Dr. Sison now recommends just pressing the meal to leave some oil in the flour for color. Dr. Santos of Saginco also recommends leaving up to 5% oil in the flour for baking purposes.

At Blue Bar, flour was produced by grinding dessicated coconut following oil extraction. Dessicated coconut is about 60% oil and will keep from 6 months to a year. The flour from extracted dessicated coconut will keep for about 18 months. Because dessicated coconut is so high in oil, it cannot be ground without extracting the oil beforehand. However, if it is pulverized too small, the protein is denatured by heat and turns brown. If this is avoided, up to 25% coconut flour can be added to bread with satisfactory results. Blue Bar stopped making flour after a solvent-related explosion.

Flour made from paring meal was previously used in school buns (Nutur buns) in the Philippines. However, this effort was unsuccesful because of the resultant color, taste, and loaf volume of the baked products. The high fiber content of the paring meal (11%) also makes it difficult to use as flour.

A pilot plant, partially financed by the Philippine Coconut Research Development Foundation, to produce 1 ton/day coconut flour was expected to be finished by March 1977. Twelve tons of fresh coconut (12,000 coconuts) would yield 3 tons of coconut water and 3 tons of dessicated coconut. Shreds of the latter would be pressed in a water-cooled screw expeller to give roughly 2 tons of oil and 1 ton of meat, which would contain 10% oil or less. The meat would then be ground to flour. Because expelling occurs at low temperatures, the flour should be suitable for human consumption.

Another method to make coconut flour is by way of edible copra, a process in which Mr. Catanaoan has participated in Western Samoa. Here copra is produced hygenically, shredded to chunks, dried to 4% moisture, expelled to remove most of the oil, solvent-extracted, and pulverized.

There are currently no plants producing coco-flour in the Philippines, due probably to the following factors:

- Coconut market dominance by copra production
- Poor past experiences in marketing coco-flour based products
- Limitations in using parings and copra meal/cake for flour
- No ready market

Coconut flour could readily be produced and there are plenty of coconuts available, but existing processors are reluctant to spend time and money to manufacture the flour, and there are currently no plants producing coco-flour in the Philippines. This is due to the following factors:

- No ready market
- Poor past experience in marketing coco-flour based products
- Coconut market dominance by copra

The Philippine Government collects a tax on coconut exports of which copra based products are the largest. Much of the copra is expelled in the Philippines and most of the copra cake is shipped to Europe for high protein supplement in animal feed. The price in Europe is $165 per metric ton delivered, with about $35 freight, making the price in the Philippines about $130/ton. Mr. Catanaoan thinks that this is much too low and that the price should be $200/ton in the Philippines. However, Mr. George Uy of Optima Scientific Consultants, Inc., indicated that the Philippine govnerment is interested in requiring flour millers to enrich flour using coco-flour. There are already activities toward producing coco-flour on a commercial scale, and people are waiting for the Board of Investment to give the go-ahead.

V. Residues and Wastes

Husks (Coir Production)

The husk is a residue produced in factory, village, and home usage of coconuts. Husks are used for fuel in factcries and to produce hot air for dehydrating coconuts in hot air driers to produce copra. A large part of the supply of husks is not used because it is dispersed all over the countryside and collection is difficult. For example, only 0.2 of the husks are used in the Philippines for fiber extraction (7).

In Sri Lanka, husks are allowed to float in a pond for approximately one month to allow the binder molecules to degrade sufficiently that the fibers could be separated. The husks are then fed by hand into a rotating disintegrator, an operation that would never pass OSHA muster. The fibers that result are spun in a cylindrical basket to separate coir dush. The best fiber (coir) is used for wallboard type products and ropes, second grade fiber is used for mats, and third grade fiber is used for stuffing mattresses and cushions. The coir dust for the most part has little use except as a soil conditioner, and enormous stacks amounting to thousands of cubic feet of it accumulate near plants processing husks to fiber. The dust is poorly combustible, degrades very slowly and picks up water readily. Annually about 60,000 tons of coir dust are produced in Sri Lanka and coir dust is the biggest byproduct disposal problem facing the coconut industry.

The Industrial Development Board of Sri Lanka (IDB) has been interested in making board, wallboard, and fuel briquets from coir dust. The difficulty with forming boards is that too much pressure is required, and no good resin has been found for permanent bonding. There has been some success in making fiberboard from coir dust and rubber latex. There is a Swiss extruder that dries coir dust from 80% to 15% moisture with heat, then compresses it to briquets. However, briquets by this process cost Rs. 350/ton ($40/ton), while firewood is only Rs. 100/ton ($11/ton), mainly because the equipment is expensive (Rs. 2 to 3

million, which is $220,000 to $330,000), and the drying step is costly also. A German press, made by Lohmann and Company of Breman, evidently does not remove moisture by heat. It is much less expensive (DM 63,000, or $25,000), and is portable, so it can be moved from one coir dust pile to the next. No binder is required.

FRI, Dehradun, India has worked on high stretch paper with 10% long fiber pulp from coconut husk. Tate and Lyle Ltd., of England, suggest the use of coconut fiber waste as a medium for crop growth; e.g. mushrooms. With additions of water and slow release nitrogen compounds, this waste can be used to grow crops in old drums underneath elevated houses during the rainy season.

Research crossing departmental lines between chemical and mechanical engineering is underway at the University of the Philippines, Diliman, to convert agricultural wastes, particularly coconut, to energy. Two types of gas were being produced: by carbonization or coir dust a gas of 400 Btu/ft^3, and by burning and spraying with water a producer gas of 100-150 Btu/ft^3. This compares to the 800 Btu/ft^3 gas in Quezon City. The coir dust burns with a heat of combustion of 7,000-8,000 Btu/lb.

Shells

After the husk is removed, the coconut shell is broken to expose and allow removal of the kernel. In domestic use, it is thrown away as waste. In industries, it is burnt in the furnaces for fuel, thereby making most of these industries, energy self-sufficient. The places of production of these are (i) Industries, (ii) Farms, (iii) Domestic usage. Shells are not considered to be an environmental problem. Shells produced domestically are not put to their best use because collection from individual households is a difficult task.

Additional uses of shells include manufacture of handicrafts, furfural, and activated carbon. Because of the increasing demand for charcoal in water and wastewater treatment, an industry potential of 571,000 metric tons per year is seen for the Philippines (25). In Sri Lanka, shells are often burned, though sometimes made into charcoal, when the plant producing the shells and other coconut products is burning firewood or fuel oil. In dessicated coconut plants, the shells are placed in brick-lined pits about 6 feet deep and 12 feet in diameter, ignited from the top and burned slowly, leaving charcoal behind. The charcoal has very high absorptive power and is bought by the Japanese for bleaching sugar and syrups. In India, NCL Poona has worked on the destructive distillates of coconut shell. FRI, Dehradun, IPIRI, Bangalore have worked on coconut flour as a filler for synthetic resin glues, filter and extended for phenolic moulder powder (26). The shells are high in cellulose and therefore could be a potitial source of glucose and/or single cell protein. Much research is being done on such conversion of cellulosic wastes (27).

Copra Cake

As shown in Tables VIII and IX, copra cake or meal has a high composition of essential human nutrients. However, because of primitive drying methods, tropical

climate and unsanitary storage conditions, infestation by insects and formation of molds producing mycotoxins renders the copra cake unfit for humans. It also sometimes causes the rejection for animal feed and increases the necessary degree of coconut oil refining. Also, the expellers for extracting coconut oil are commonly run at temperatures which denature proteins. It is estimated that worldwide, 200,000 metric tons per year of coconut protein are lost (5, 25) due to the conditions in copra manufacturing. As mentioned before, 30% of the available oil is also lost.

There is interest in producing clean copra so that the cake can be used for human consumption. Dr. Dardjo of the Chemical Research Institute in Bogor, Indonesia, proposes that human grade copra as a protein source can be made by improving the method of oil separation/extraction. The Asean Coconut Community is seeking funding for research to isolate protein from copra meal. In Indonesia, Bongrek for human consumption is made by a fungi (Rhizopus) fermentation of copra, copra cake, and the residue from coconut milk production. However, typical moldy copra cake resulting from poor drying would not be suitable. Production of Bongkrek is a cottage industry. Incomplete and poor fermentation lead to growth of a pseudomonas strain which makes the Bongkrek toxic. However, if done properly, a high fiber source is converted to a protein rich food (29).

There is interest in the Philippines for producing flour from copra cake. Alternate approaches to drying and producing coconut oil starting with fresh coconuts and employing rigid sanitary conditions, must be used to obtain good grade copra cake for making flour. Improved drying seems to be the key to producing clean copra. The temperature should not exceed 110°C so as to avoid protein denaturation (16), and residual moisture should be low. Sanitary storage also appears to be necessary. Two proposals have been received for rural integrated coconut processing centers to produce edible coconut oil and edible coconut flour.

Dr. M. Santos of Saginco and Mr. C. Eng have developed a field drier for copra to be used at the village level to produce a high quality clean copra (25). The traditional drier does not reduce water low enough to prevent growth of molds. Their drier which uses indirect air drying and is fueled mainly with coconut husks, would allow the dried copra to be stored without significant deterioration. It is intended that a flour company will buy the clean copra, sell the oil obtained by cold pressing as cooking oil and make flour from the pulverized, defatted meal. Dr. Eng and Mr. Santos propose to combine coconut flour 50:50 with banana flour to produce "banco", a flour with a protein content of about 11 to 12%. This can be used to replace up to 10% of the wheat flour which is imported to the Philippines. Their plant is designed to produce 18 tons/day of refined coco oil and 9 tons per day of flour from 10,000 nuts per day. They plan to leave about 5% oil in the flour to provide oil for baking.

Dr. del Rosario of the Institute of Nutrition, Philippines Women's University, has proposed a program for "Agro-Industrialization of the Coconut Industry through Rural Processing Centers" (26). The plan involves establishing several drying-expelling plants in rural areas, with a central plant for oil refining and meal pulverizing. The rural drying-expelling plants will produce crude oil from the dried coconut and the coconut meal which still contains some oil. In the refining plant, the oil will be refined to a high grade cooking oil, and the meal solvent extracted and pulverized. The defatted, pulverized meal will be used as flour.

There has been extensive work done at NIST of the Philippines by Dionisio T. Solon and Estelita M. Payumo to develop coconut flour from either fresh coconut or copra cake or meal. They have manufactured products like coconut-Mung Bean-Nonfat Dry Milk mixture.

Dr. E. J. del Rosario, Department of Chemistry, University of the Philippines, Los Banos is studying the use of cellulase to reduce the crude fibre content of fresh and desiccated coconut, copra meal and coconut expeller residue (10). This treatment increases the oil extractability of the various coconut meat products as well as improving the digestibility. Another approach to reducing the fiber content of flour made from the above coconut meat products is air classification. Air classification might be able to increase the protein content to 30-35%.

An alternate approach to producing coconut oil is the aqueous process using fresh coconuts developed by a Texas A&M group and Tropical Products Institute (14, 28). These processes allow recovery of premium oil, food grade protein, and fiber products. With regard to oil yield, a comparison of traditional copra processing with wet processing is shown in Table X.

A pilot study at Cebu City, Philippines of the Texas A&M process has just been completed. Tropical Products Institute stopped their wet processing project because the economics looked unfavorable compared to the traditional methods of producing coconut oil from copra.

Parings

The parings from desiccated coconut manufacture go to a drier and then to an expeller. Crude paring oil produced in the expellers is filtered and sold to manufacturers of edible oil. Paring oil is used in filled milk as a replacement for butter fat in the Philippines. The expeller cake (paring meal) is sold as animal feed. Pacific Oil and Vegetable Company reportedly uses hexane to extract oil from the cake after the expellers. This reduces the oil from 8% to 1-2%, and the defatted cake is exported for animal feed.

The composition of essential human nutrients in parings is higher than in fresh coconut meat. There is interest in the Philippines in making coconut flour from parings. This has been previously described.

Dr. Acena of the Philippines has developed a process for the production of a low-fat, high-protein non-denatured flour from coconut parings (30). The coconut desiccating plants in the Philippines currently produce about 60,000-70,000 pounds/day of coconut paring meal and Dr. Acena's process could produce a food-grade material from this by-product of the desiccated operation.

Coconut Water

Coconut water is wasted from individual home usage of coconuts, village scale production of copra, and factory production of desiccated coconut. However, only the release of coconut water from desiccated coconut factories has significant environmental impact because of the large number of nuts processed and the resultant large quantity of washwater and coconut water released.

The composition of coconut water is shown in Table V. The wastewater from a desiccated coconut plant consists of wash water (3,000-4,000mg/l BOD_5) and coconut water (14,000-15,000mg/l BOD_5), and the combined effluent has a BOD_5 of

TABLE X

Oil Yields: Copra Versus the Wet-Coco Process (15)

Basis 1000 lb. of fresh coconut of 37.5% oil content

Process	Copra				Wet	
% loss of original fruit	30%		20%		Nil	
wt. of oil available for extraction	262.5 lb		300 lb		375 lb	
% overall yield of oil	90% to 95%		90% to 95%		70% to 80%	
wt. of oil recovered	236.3 lb	249.4 lb	270 lb	285 lb	262.5 lb	300 lb

about 6,000 ppm. A typical effluent analysis is given in Table XI. Due to the plant growth factors in coconut water, untreated wastewater from the Franklin Baker plant in San Pablo had caused downstream rice plants to grow tall and rapidly without the simultaneous growth of rice. Because of this, a wastewater treatment system was installed at Franklin Baker.

A large volume of wastewater is generated in a desiccated coconut factory. For example, in Sri Lanka, about 500 gallons of washwater result from an average mill processing 50,000 nuts per day (24). This portion of the effluent contains about 1% coconut oil and about 0.5% protein. The Blue Bar desiccated coconut plant in the Philippines opens about 300,000 nuts per day (12), thereby releasing approximately 24,000 gallons of pure coconut water plus about 200,000 gallons of process water. The Franklin Baker plant in San Pablo, Philippines, processes about 500,000 coconuts per day and wastes 160 tons per day of coconut water. Forty tons of water per day are wasted at their plant at Davao del Sur in Mindanao, Philippines (11).

In the Philippines, there are five desiccated coconut factories, and wastewater effluent from desiccated coconut factories is a major environmental concern in the Philippines. Dr. Garcia of the National Water and Air Pollution Control Commission indicated that they plan to file suit against one major desiccated coconut company if their wastewater treatment is not improved. Following wastewater treatment, the effluent having a BOD_5 of 3,000-4,000 ppm BOD* is discharged to a waterway. The anticipated discharge standard is 50 ppm BOD_5, which will be difficult to meet. In Indonesia, there is little concern over environmental impact. Hence, the major environmental impact and concern over coconut water is in the Philippines.

A flow diagram for wastewater treatment in a desiccated coconut factory is shown in Figure 4. At the Franklin Baker plant in San Pablo, the combined wastewaters (COD 6,000 ppm) first goes to a rotary screen. This is followed by a dissolved air flotation unit for oil recovery, with the effluent then going to an aerobic basin. A clarifier follows the basin, from which oil is skimmed and a final effluent with a COD of about 2,000 ppm is discharged. The recovered solids from screening go to the parings dryer, and the scum from the clarification chamber is rendered into an oil which is sold to a soap manufacturer and a protein fraction which is burned or discarded. The protein fraction might be useful for animal feed. At the Franklin Baker plant in Devou, the wastewater is dumped into the ocean after screening. The Blue Bar factory currently recovers the entrained oil by settling and flotation, without further treatment.

In Sri Lanka the liquid from washing the kernel containing 1% oil and 0.5% protein is settled, often with the coconut water, until the protein coagulates through fermentation and rises to the top (24). This is boiled down and pressed to recover "drain oil", while the protein-rich residue is used for fertilizer and the liquid effluent dumped. Work is underway at Ceylon Institute of Scientific and Industrial Research to make this separation without subjecting the protein to fermentation.

The current wastewater treatment methods for desiccated coconut effluent are inadequate, and as previously mentioned, the effluent is considered to be a serious

---

* The Franklin Baker effluent at San Pablo has a COD of 2,000 ppm.

TABLE XI

Typical Analysis of Effluent Water From

a Desiccated Coconut Plant (12)

Acidity	759	mg/l
Chlorides	722	mg/l
Nitrogen-Nitrite	0.12	mg/l
BOD	5,800	mg/l
Settleable Matter	0	
Phosphate	42.5	mg/l
Phenols	4.8	mg/l
Sulfate	133	mg/l
Suspended Solids	184	mg/l
Volatile Suspended Solids	180	mg/l
Turbidity	220	Jackson Unit
pH	6.3	
Grease & Oil	76 PPM	
Temp	97°F	

Pure coconut water BOD	=	14,000 - 15,000 mg/l
Process Water BOD	=	3,000 - 4,000 mg/l
Acceptable Effluent BOD	=	50 mg/l or less

FRANKLIN BAKER CO., WASTEWATER TREATMENT PROCESS

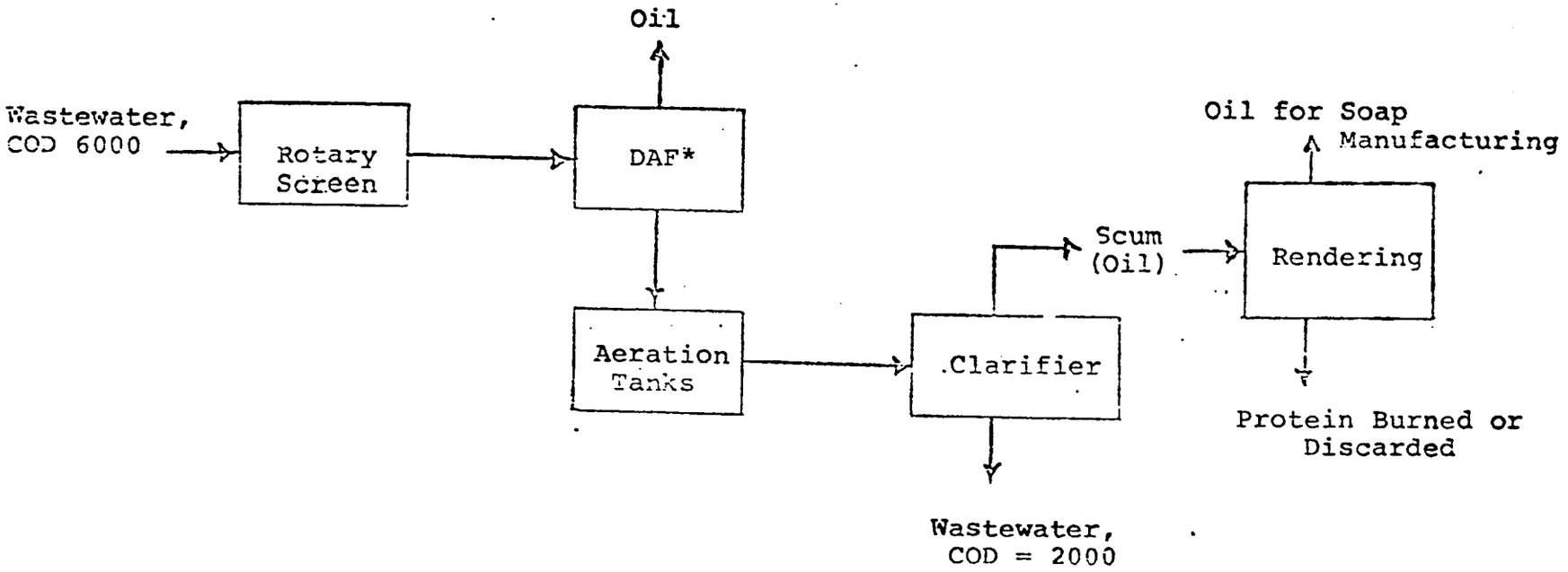

BLUE BAR COCONUT PHILIPPINES INC., WASTEWATER TREATMENT PROCESS

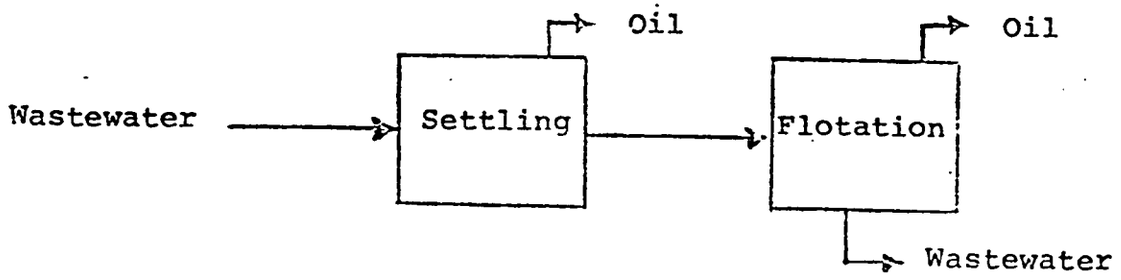

- Dissolved Air Flotation.

FIGURE 4

pollution problem. Both Blue Bar and Franklin Baker are considering making products from the pure coconut water, thereby offsetting waste treatment costs. The BOD of the remaining effluent will simultaneously be reduced so that it can be more easily treated to conform to pollution control standards.

Coconut water, which has the composition shown in Tables V and VI, is an excellent fermentation medium. Due however to the low sugar and high water content, concentration prior to fermentation by reverse osmosis or evaporation improves this quality and eliminates the need for supplemental sugar. Reverse osmosis may be preferable to evaporation because of lower fuel requirements. Also, use of surplus molasses where available, could be used as a sugar supplement for fermentation and minimize or eliminate the need for prior concentration.

Dr. J. Sison of Blue Bar (12) in the Philippines has proposed a scheme for utilization and disposal of coconut processing wastewater shown in Figure 5. The coconut water comes out during nut cracking and trickles into a canal in the middle of the floor, where it picks up dirt. The water then goes to drains when the floors are washed, and then to the treatment plant where it is combined with process water. Utilization of coconut water will require much more sanitary conditions for collection of the coconut water and segragation from the process water. Since coconut water is putrefactive, processing should be immediate and continuous.

Blue Bar is now piloting the production of torula yeast, destran, and vinegar by fermentation of the coconut water. At this time, the coconut water is not being concentrated prior to fermentation and dextran production by Leoconstoc Mesenteroids requires the addition of sugar. The dextran, a bacterial polysaccharide used as a gum in various funds, is intended for export.

An aerated, agitated, cooled 5,000 liter fermenter is being used to produce the yeast. It is intended to centrifuge the yeast suspension following sedimentation, drum dry the recovered solids and sell them to an animal feed manufacturer. Protein feed supplement is imported in the Philippines, and this there should be an animal feed market in the Philippines for yeast grown on coconut water. Growth of yeast can reduce the BOD of the coconut water by 50% (12), rendering it more suitable for disposal or amenable to further treatment. Mr. Santos of Saginco would like to ferment the waste banana peel from flour manufacturers with the coconut water to obtain single cell protein. The peels when green have most of the carbohydrate in the form of starch; this is converted to sugars as the peels ripen.

Blue Bar has a 1,000 gallon per month buyer for the vinegar, which is sold locally. However, the market demand for vinegar in the Philippines needs to be determined. Blue Bar plans to use an Osmonics reverse osmosis system to concentrate the coconut water prior to fermentation. The Franklin Baker Company in the Philippines indicated possible interest in concentrating the coconut water by ultrafiltration or reverse osmosis and using the concentrate to make a coco jam or to grow yeast. Their interest in using the coconut water is not as strong as Blue Bar's.

Generally, coconut water released in grating coconuts for domestic use and copra production is wasted. In India, the water is drunk and used in indigenous medicine. In the Philippines, both vinegar and nata are made from coconut water. Nata de coco is a popular dessert produced by growing a species of the vinegar group of bacteria (acetobacterxylinium) in sugared coconut water and coconut skim milk media. A guide to preparation of "nata" from coconut water is available from the Biological Research Center, National Institute of Science and Technology (NIST) in Manila, Philippines (31). NIST suggests that there may be a ready export market for nata de coco. Successful production of nata requires carefully

FIGURE 5 (12)

"Schematic-Flow Diagram for Utilization and Disposal of Coconut Processing Waste"

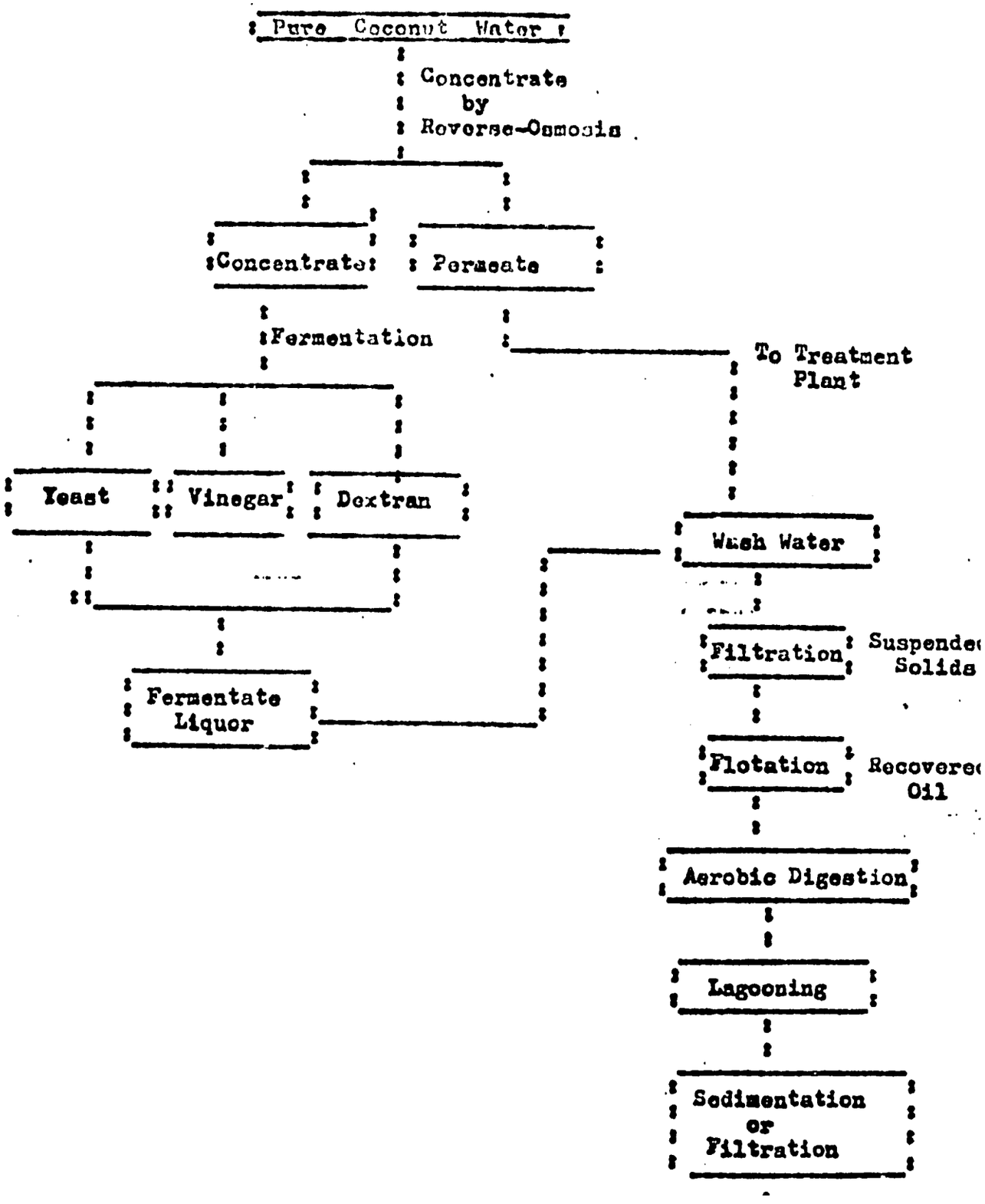

controlled aseptic conditions. Nata could also be made from the coconut water released in desiccated coconut plants.

NIST also has a standardized method for the production of vinegar using coconut water as a culture medium (32). This involves alcoholic and subsequent acetic acid fermentation. NIST states that "Vinegar production, if developed into a home industry, would provide a profitable means of utilizing surplus and unmarketable overripe or blemished fruits, thus increasing economic prospects in rural areas." If the coconut water at the village level could be suitably collected, fermentation with a Tate and Lyle type village fermenter might be a possibility.

Coconut water is an excellent source of plant growth factors and has potential applications for:

- Plant tissue culture applications
- Irrigation of vegetable crops
- Production of bacterial polysaccharides
- Pharmaceutical applications, e.g. antibiotics

However, no commercial interest has been expressed in these applications.

Dr. Hipolito of the National Institute of Science and Technology has developed both food and feed yeast from coconut water supplemented with blackstrap molasses (33). The Rhodotorula species of yeast is rich in vitamin B complex group and is over 50% in protein. The yeast reportedly has a strawberry flavor and could be used in beverages, candies, bread, and cereals. Growth of this yeast on coconut water also provides use for surplus molasses from the sugar mills. This fermentation has been done only at the laboratory scale and still needs to be piloted.

Coconut water has been fermented to produce a sake-like wine by both Steinkraus (29) and Crisostomo of the Department of Agriculture in Manila. Other potential uses of coconut water are as a rubber coagulant and a source of potash in agriculture.

Coconut water, which is wasted at the individual home or village level, is not considered to be an environmental problem. Widespread usage of the water would be difficult to implement because of collection, storage, sanitary problems and rapid deterioration. Usage of the coconut water wasted from desiccated coconut plants would be more viable because of the

- Environmental impact
- Large quantities generated
- Ease of collection due to the centralized facilities

Storage might still be a problem and sterilization could be necessary. However, concentration by reverse osmosis or evaporation would help in these matters. Development, testing and economic analysis is needed with regard to making and marketing products from coconut water. There might be considerably more water available from desiccated coconut plants than can be used in the Philippines.

Losses in Domestic Consumption

In the traditional process of making coconut milk, 20-40% of the oil is left in the protein bearing residue (34). This residue which is largely wasted represents the equivalent loss per year of

- 2.6×10^6 coconuts in Indonesia
- 19×10^6 metric tons of oil in the Asean Coconut Community countries (India, Indonesia, Malaysia, Philippines, Sri Lanka, Thailand, Western Samoa)

When Ceylon Oils and Fats Corporation instituted a program to collect the refuse, it failed because it was so widely dispersed. While the refuse has protein and oil, it deteriorates quickly.

Experiments in Indonesia by Dr. Dardjo showed that grated coconut residue when dried to a moisture content of 7.2%, contains 24.7% oil and 6.9% protein. It may be calculated that from 2,600 million nuts used in Indonesia for culinary purposes, an amount of 132,080 tons of oil and 36,400 tons of protein is lost in the residue. At the same time, a large amount of shell and coconut water is wasted, which otherwise may be converted into charcoal or active carbon, and vinegar or other products, respectively (20).

Centralized processing, which is not currently done, can minimize losses of protein and oil and facilitate collection and utilization of the coconut water. Dr. Dardjo estimates that centralized processing of the $2,600 \times 10^6$ nuts used for coconut milk production in Indonesia could yield the following additional products:

Oil (recovered from the residue)	132,080 tons
Protein (recovered from the residue)	36,400 tons
Charcoal	468,000 tons
or Active carbon	130,000 tons
Coir fibre	1,040,000 tons
or Mattress coir fibre	208,000 tons
Coconut water	676,000 tons

Dr. Laurentius (24) of Ceylon Institute of Scientific and Industrial Research also proposes centralized processing of coconut for milk extraction to provide an annual additional 30,000-35,000 tons of oil. He proposes extraction of the emulsion by mechanical pressing, bottling of emulsion for use in the household, and extracting the oil available in the residue in the conventional expeller.

As previously described, the production of coconut oil for household use also yields a resude which presumably consists of protein, carbohydrate and some minerals. After being pressed, the curd may contain 7.5% oil when the moisture content is 13.8%. In Indonesia, annual consumption of coconut for klentik oil preparation amount to 640 million nuts. As in coconut milk preparation for culinary purposes, the grated coconut residue may contain 24-25% oil. Together with the oil in the curd, the total loss of oil in klentik oil preparation may rearch 33% or half of the oil content of copra. Coconut oil which is lost in this process may be as high as 42,250 tons, and that or protein nearing on-fourth of the amount lost in coconut milk preparation (28). Also in the traditional process of making coconut oil, the protein is denatured and the quality of the oil is lowered, resulting in a higher price of the finished product.

In production of both coconut milk and coconut oil for domestic purposes, coconut meat is lost in scraping the meat from the shell.

Distillery Residues from Arrack Production (9)

The sap from coconut blossons contains about 22% sugar, consisting principally of dextrose, fructose, and a small amount of surtose. There are also some five carbon sugars present. The dextrose, fructose, and sucrose are readily fermentable by yeast yielding 8% alcohol.

This product is a native drink in Sri Lanka known as toddy. When this material is distilled, a 78 proof product called arrack is obtained. The spent wash, or still bottoms, is high in yeast, unfermented carbohydrates, principally five carbon sugars and about 2% proteins. Mervyn Pulle (9) in Sri Lanka is trying to make a very nutritious yeasty beverage by centrifuging the yeast after distilling. He is also trying to concentrate the still bottoms to dryness and adding soy protein to make a bouillion cube-type product. When this mixture is fed to broilers and pigs they grew very well. The dried residue is only 2-3% protein on a dry basis, but is high in minerals, vitamins, and sugar. Fuel for evaporation of the still residue would be expensive.

VI. New and Alternate Processing

Protein and oil losses via the residues from domestic coconut milk, coconut oil, and copra production can be minimized by improving the production of coconut milk and oil via centralized production in factories, improvement of existing methods, and alternate processing methods such as aqueous methods. Centralization would also facilitate collection and ultimate usage of residues and coconut water. Therefore, interest exists in alternate methods of coconut processing suitable for centralization at the village scale or larger. Since all these processes start with fresh coconut, the residues can be used for animal feed, protein concentrate or flour. There should be no competition between the supply of coconuts for domestic food needs and coconut oil production as more coconuts could be grown if necessary. The economics of industrial production of coconut milk, however, must be such that the price of the product would be comparable to the costs involved in home use. For example, the use of tin cans for centrally produced coconut milk in Thailand, made the product uneconomical. Village local plants should be useful because they would minimize distribution problems and reduce costs.

Hander Process (20)

"Late in the nineteen-sixties, a new process to produce oil from fresh coconut meat was introduced using a "HANDER" type machine. Essentially, the process consists on grinding fresh coconut meat, heating util most if not all water is evaporated, and pressing the oil out. The oil is similar to "klentick oil" in the sense that it does not need further refining since the FFA content is relatively low. The residue (cake) is much cleaner compared to that of copra, and it was originally intended for human consumption through mixing with other less nutritious foodstuffs such as tapioca or gaplek meal (dried sliced cassava meal) in cheap cookie preparation.

The main problem of this process is that the oil foams when used for frying (due to the presence of free lauric acid). The oil is very often mixed with unrefined copra oil to reduce foaming, and at the same time reducing the FFA and color of the copra oil. The economics of the process are not favorable; furthermore, it cannot compete in obtaining fresh coconut with that for household use."

Fermentation Process

Dr. Purwo Arbianto of the Bandung Institute of Technology, and S. R. Untung have developed a village scale process to more cheaply produce coconut oil (35). This work is sponsored by the Church World Service. Wet shredded coconut is pressed to yield the coconut milk and the resultant emulsion (cream) is broken via fermentation with S. cerevisae. Upon separation, a high quality coconut oil and an aqueous layer containing relatively undernatured protein is produced. A flow diagram of this process is shown in Figure 6.

Residues which are produced in this process are:

- Spent shredded coconut meat which could go to animal feed, or be toasted and used as human food as done in Ciamis
- Coconut water and skim milk which could be used for production of single cell protein

FIGURE 6

Coconut Oil by Fermentation (35)

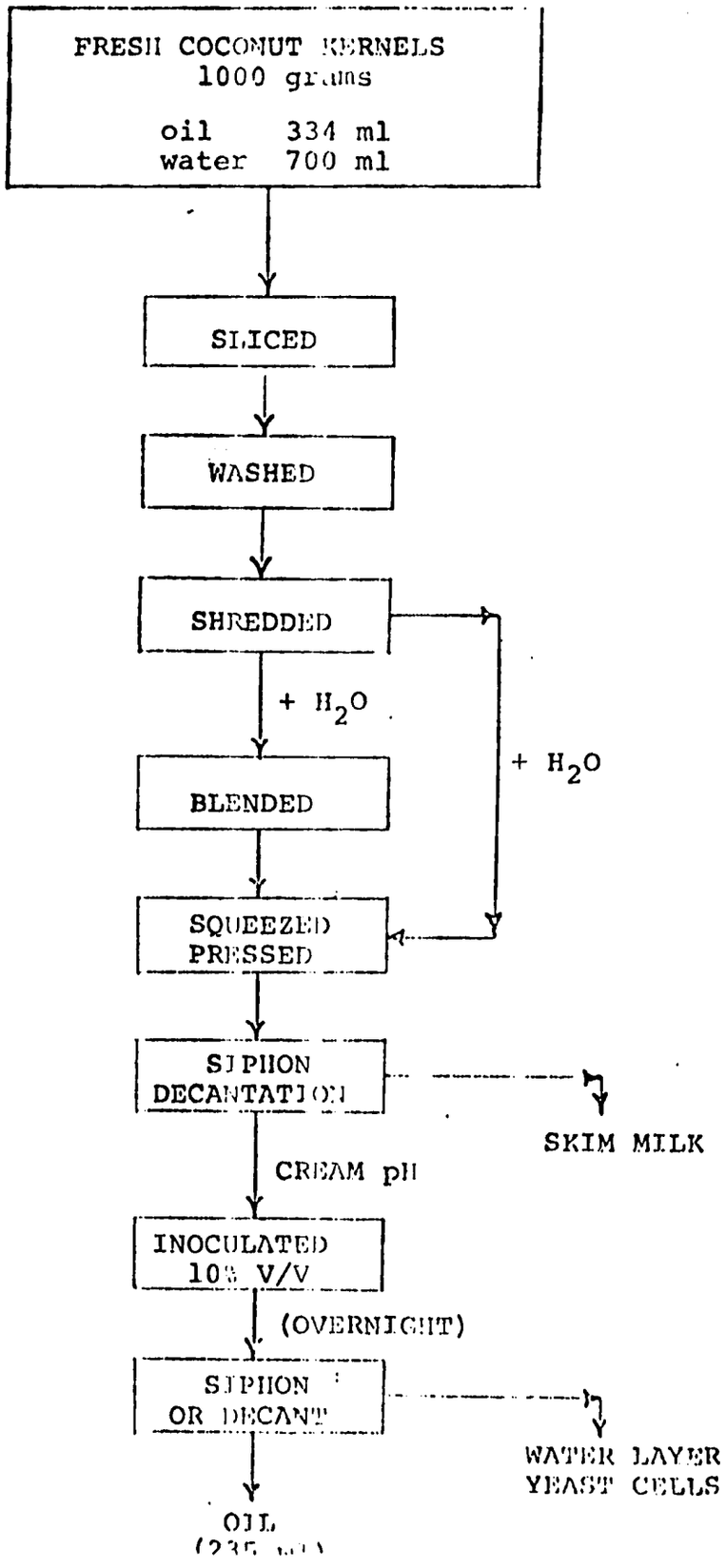

- Liquid containing the protein which remains after oil production, for which no current usage is planned. The protein could possibly be used as Taofu.

Pilot scale testing is ready to begin, and UNEP is providing grinders and presses to handle 100-200 coconuts at a time.

Asean Coconut Community (Jakarta, Indonesia)(34)

"An effort has been made in most of the ACC member countries to produce bottled or canned coconut milk and the development work on this is still going on. Further development in coconut milk production has been limited due to lack of coordination among the various Applied Research Centers in the ACC member countries dealing with the problem. Each of these research centers has tended to work in isolation and the result has been dissipation of efforts and resources. The Institute of Food Research and Product Development, Kasetsart University, Thailand had been experimenting for a number of years on the preparation of canned coconut milk, which have been test-marketed on a small scale. The results were very favorable."

The Asian Coconut Community is now involved in a UNDP pilot plant for production of concentrated coconut milk. The project is being conducted at Kasetsart University in Bangkok, Thailand under the direction of Dr. Amara. The purpose of the pilot plant is to prove the viability of producing and marketing canned coconut cream (long shelf-life products) in urban areas to accomodate the increasing numbers of working women. Large scale production of coconut cream could save the equivalent of 90 x 10^6 tons of oil in the Asian Coconut Community (India, Malaysia, Philippines, Sri Lanka, Thailand, Western Samoa).

In this process (36), mature coconut meat is shredded, then water added and the mixture separated in an expeller into milk and fibre. The milk is heated to 70°C in an open pan with very efficient agitation. Heating above this temperature will cause protein denaturation.

Heating is continued until the moisture content is reduced to 10-11%, giving a fat content of 76-80%, and protein 6-7%. Stabilizer, preservative and antioxidant are added prior to packing in cans or toothpaste-type tubes holding 160gm. The tubes are a convenient pack for tropical use, but in cooler climates where the "cream" tends to solidify, the cans are preferred. The contents of 1 tube or 1 can are equal to 1 large coconut. The residue which is left has been used by Dr. Amara in a school lunch program and reportedly as a flour extender in Sri Lanka. There is as yet, no private sector interest in the project.

The ACC is also trying to get funding for research on protein isolation from defatted coconut meal and press cake.

Applied Scientific Research Center of Thailand (ASCRT) (37)

ASCRT has developed both a stabilized coconut milk and a concentrated coconut milk. Both products supposedly had good appearance, flavor, and taste. However, the economics for industrial scale application have yet to be proved.

Recently, a canned concentrated coconut cream has been produced. Its composition is 43.4% moisture, 42.5% fat, 1.5% protein, 0.4% ash and

12.2% carbohydrate. In preparing the coconut cream, a whey was collected after the cream is separated. When the whey was mixed with diluents and spray dried, a skim coconut milk powder was obtained having 62-66% protein. Since this product is also readily dispersable, it may very well serve as a major ingredient for other food preparations, milk substitute, baby food, etc. The residue left after extraction of the milk from the shredded coconut meat was dried for use as an ingredient in animal feed. Analysis showed that the residue contained 2.3% moisture, 40.6% fat, 5.8% protein, 1.3% ash, 12.9% crude fiber and 37.1% carbohydrate. ASCRT sees this production of coconut cream as a new industry which will centralize coconut usage and minimize wastage. The process has not yet been piloted. ASCRT has also developed a soft drink from coconut water which showed about 80% acceptability.

National Science Development Board of the Philippines (NSDB) and National Institute of Science and Technology (NIST) (38)

Lotho and Gonzalez (38) have reported on research involving coconut meat and milk. NIST has developed a process to make granulated coconut from fresh coconut meat by dehydrating the finely ground coconut meat in a fluidized bed type dryer. The product compares well with desiccated coconut and was found to be excellent for ice cream, peanut butter, cookies and baked breads. They are also trying to make canned coconut milk.

In another project, NSBD is running a pilot plant in Liliw, Laguna to produce coconut milk (gata) by expelling of fresh coconuts. This pilot plant is canning fresh coconut cream, gata, and coco honey. If technical and commercial feasibility studies are encouraging, similar pilot plants will be put up in selected coconut areas. This pilot plant aims not only to develop the cream and gata canning but also to exploit the potentials of other products from the by-products like:

- Skim milk
- Protein solids
- Coconut meal (sapal)

Dr. del Rosario of the University of the Philippines at Los Bano is studying acid hydrolysis of the expeller residue (10) of fresh coconut from the National Science Development Board pilot project to make coconut milk. The reducing sugars obtained by hydrolysis can be fermented into alcohol or yeast biomass, the yeast being used to supply animal or human protein requirements. Candida yeast can be grown on the hydrolyzates of the coconut wastes and can be used directly for animal feeds or incorporated into human food after removal of the nucleic acids. In other work, the University of San Carlos, Cebu City, is studying protein extraction from coconut meal and spent copra.

India (26)

"CFTRI scientists (D. S. Krishna) have patented a system of drying coconut kernel with simultaneous oil extraction by azeotropic distillation of the water in the coconut, using solvents like heptane. The process is said to be an adaptation of the Viobin process for fish processing as developed by the U.S. Bureau of Fisheries for the manufacture of fish protein concentrate (FPC) in South America. The coconut residue after the distillation (really a dewatering step) and separation of the solvent-oil solution, is food grade and can be made into a protein-rich coconut flour."

Mexico

Anderson IBEC (USA) has sold a plant to Mexico to process nature fresh coconuts to produce and meal for animal feed. If stainless steel processing equipment were to be used, the meal could be used for human food. Both the coconut water and skim milk produced will go to a whey type drier to yield a milk product. Applications for similar plants have been received from the Fiji Islands and the Marshall Islands.

Aqueous Processing (14,30)

A pilot plant to make coconut products by a wet process has been installed at the University of San Carlos in Cebu under the auspices of the Philippine Department of Agriculture and NSDB, and with financial support from U.S. AID and West Germany. The project manager is Robert Hagenmaier of Texas A & M University. The plant, which follows five years of AID-sponsored research at Texas A & M, is designed to process 2,000 coconuts/day. After husking and shelling, the meat is pared (unpared meat may be used, but the product is slightly bitter). It is ground and water-extracted with pressing to produce a coconut milk containing most of the oil and protein. After pasteurization, the milk is centrifuged, yielding an oil-rich emulsion and an aqueous fraction high in protein. The emulsion is further centrifuged to give a purified oil, while the aqueous phase is subjected to vacuum evaporation and spray drying to make protein powder. In this manner coconut oil is obtained as in the traditional process, but edible protein for humans is made instead of copra for animal feed. As 93% of the Philippine coconut crop, the largest in the world, now goes to copra, this process could give a major amount of protein.

The economics of wet processing are unfavorable compared to traditional processing methods. Stainless steel vessels are required, sanitation is strict, and a higher technology is used. But as shown in Table X, if we consider losses of coconut oil in various stages of conventional process, we see that wet processing has an advantage.

A comparison is shown in the following table between dry processes and wet processes for centralized production of coconut oil. It should, however, be realized that none of the products listed are now being made on a commercial scale, and many are still at the laboratory or pilot stage. They may not be able to compete economically with the traditional methods of producing copra to yield coconut oil. In addition, aqueous processing demands technical skills not readily available at the village level. Tropical Products Institute of England also had a wet process pilot plant, but closed it down due to apparently unfavorable economics. Another wet process, the Carver-Greenfield process, had been used in the past.

FIGURE 7

Texas A&M Aqueous Process (28)

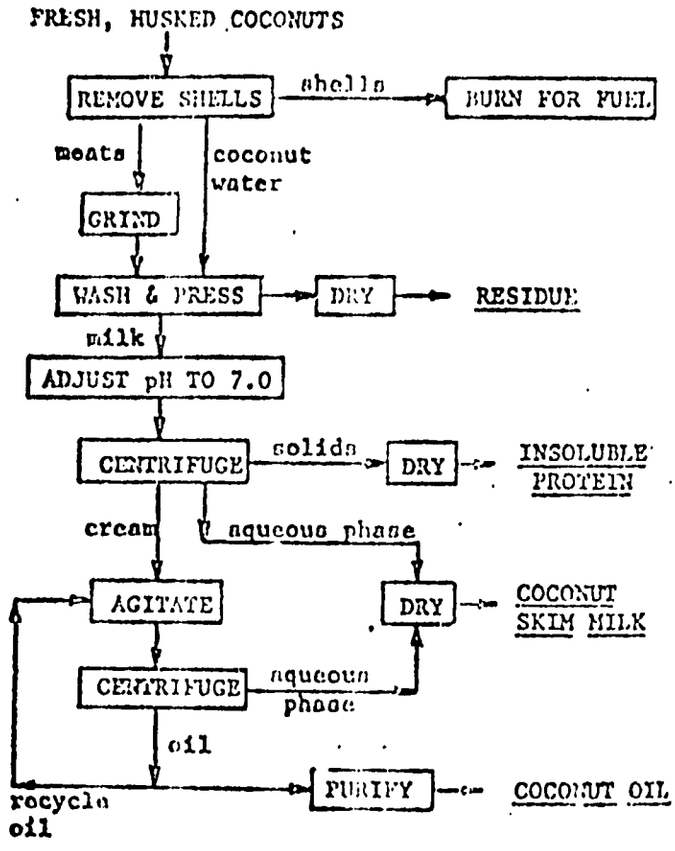

TABLE XII

Comparison Between Dry (Copra) Process and Wet Process (40)

Production of Coconut Oil:

I. By-products obtained from:

A. Dry Process
1. coconut flour
2. protein isolate
3. meal

B. Wet Process
1. meal
2. protein isolate
3. skimmed milk

II. Uses of by-products obtained from:

A. Dry Process
1. coconut flour
- used in confectioneries, ice cream, cakes, cookies and other baked goods
- for multipurpose food (MPF)
- coco noodles
- coco crunchies
- coco cereal
- pan de sal
2. protein isolate (unstable)
- infant formula
- mostlers spread
- canned vegetable loaf
- condensed gata
3. meal (unstable)
- animal food
- coco flour

B. Wet Process
1. meal (unstable)
- animal feed
- oil
- coconut flour

- confectionery products

2. protein isolates
   - infant formula
   - mostlers spread
   - canned vegetable loaf
   - condensed gata
3. skimmed milk (unstable)
   - fruit and chocolate-flavored beverages
   - coco honey (low fat)
   - protein isolate
   - instant drink
   - sodium salt of coconut protein

VII. Individual Countries

Some material specific to individual coconut producing countries has already been described and will not be repeated here.

Philippines

The Philippines is the world's largest coconut grower and exporter of coconut derivatives: desiccated coconut, copra, crude coconut oil, and copra cake meal. There is also widespread usage of coconuts in individual households. Copra accounts for more that 90% of the coconut business in the Philippines, with 900,000 tons being produced in the first half of 1975. By contrast, desiccated coconut production during this period was 21,337 tons. Environmental impact from desiccated coconut plant effluents would be most severe in the Philippines and the National Pollution Control Commission seems to be serious about controlling industrial pollution, including that from desiccated coconut plants and other industries. For example, the Philippines Board of Investments require approval from the pollution control agency on all new plants. Another indication of their intent is shown by the formation of an army team in 1974 to enforce pollution control deadlines. Sugar related wastes and coconut water from desiccated coconut plants are considered to be among the most severe environmental problems. Thus, there may be incentive in the Philippines to use coconut water to make various products as previously described as this will be more economical than treating just to meet effluent standards.

With regard to copra production, the largest proportion of copra is produced by smoking the meat over an open kiln (15). Copra is graded into 79 classifications, with the highest designation given to copra which is clean, white in color, free of soot, uncharred, free of mold or decay, having little putrefaction, and with a low moisture content. To achieve these qualities with the smoke curing method is almost impossible. Thus, Philippine copra is generally of very low quality, among the lowest in Asia, and commands a low price on the world market.

Coconut byproducts are widely used in the Philippines. Husks are turned into coir, which is used for brushes, brooms, novelties, ropes, carpets, fishnets, sacho, cushions, and insulation boards. A large percentage of the husks are burned or thrown away. Nothing is being done with the little coir dust that is being produced. It can be compressed into cylinders for fuel without drying or use of binder, but is too costly to compete with wood. Pressing removes most of the 60% moisture.

The shells can be burned under the boiler, for they burn readily and produce intense heat. They can also be ground fine for a filler in adhesives or plastics such as phenol-formaldehyde resins, or made into activated charcoal. The shell also goes into decorations and kitchenware.

Trunks are used for rafters and posts, young shoots for vegetables, and leaves for roofs, hats, mats, and fans. Blossoms are made into novelties, and the meal goes to livestock feed and fertilizer. Active here are the Philippine Coconut Authority, NACIDA, NSDB, and the Forest Products Research and Industries Development Commission (FPRIDC) (42).

"Modern kiln drying is used in relatively few regions. They produce the highest quality of copra, and the process is far less tedious than sun-drying. The government is encouraging the setting up of cooperatives to build and operate modern kilns."

There are problems with regard to coconut and banana flours and Banco (coco-banana flour) as a partial replacement for imported wheat (42). The flour millers want assurance from the Grain Authority that the quality of the bread would not be impaired. In addition, the cost of coconut flour might be higher than wheat flour. Blue Bar estimates that coconut flour will cost 3/kg, while wheat flour sells for 2 /kg.

There could be strong opposition to this change. The Government has imported wheat at $114/ton and sold it to the millers for $240/ton, who in turn make a good profit in milling it. It is very doubtful if Banco would be adopted unless there is a Government ruling that it must be incorporated into wheat flour. Several years ago a law was passed to require the wheat millers to add 10% cassava starch to wheat flour. The law was poorly written and the millers could not be forced to comply. If Banco is added there is likely to be resistance. Another possibility is to add rice flour to wheat flour, as the protein content of rice flour is 8 to 9%, the color is better than wheat flour, and it would not have a pronounced taste. The rice crop in the Philippines is large enough that rice flour could be available.

Thailand

There are no plants which process whole coconuts in large enough quantity to warrant large scale waste recovery, and no environmental complaints regarding coconut wastes have been made to the government. The primary use of coconuts in Thailand is for domestic consumption.

Indonesia (20)

While Indonesia is a big coconut producer, it is mainly a small holder crop. The centers of production are located in Sulawesi, Maluku Islands, east coast of Sumatra and Java. There is one desiccated coconut factory in Indonesia, located in North Sulawesi, with a production capacity of 2,000 to 3,000 tons per year, which represents a negligible number of nuts. The coconut water is wasted from this plant and no environmental concern exists since the factory is located in an unpopulated area. The parings from this plant are extracted for oil and then exported.

The annual average production in 1976 was 7,500 million nuts (20). The government is trying to increase production. Coconut, the major source of edible oil in Indonesia, also contributes protein in the diet. Two thousand, six hundred x 10^6 nuts are used for preparing santan (coconut milk) and another 40 x 10^6 for klentik oil. The remainder is used for making copra.

There were 435 coconut oil (copra) mills in 1974 with a total designed capacity of processing 1.7 x 10^6 ton/yr. of copra. The yield of oils is generally low and the cake with 10-15% oil is exported as animal feed. However domestic demand for the cake as cattle and chicken feed is increasing. Remaining oil in the presscake is also extracted and the cake exported as animal feed. There is one animal feed factory in Indonesia which mixes tapioca with copra cake and produces pellets for export. There are coconut oil refineries in Indonesia, but the unrefined oil (klentik) has a bigger market in the country.

Sri Lanka

The major proportion of coconuts in Sri Lanka are consumed domestically in households to obtain coconut milk from the mature kernels. The per capita consumption for this purpose is 124 per year. "Polkdu", the residue from this extraction, has an oil content of up to 35%. This oil, if extracted, would

yield industrial coconut oil for fatty acid production or soap manufacture, while the extracted meal can be used for production of animal feeds. When Ceylon Oils & Fats Corporation instituted a program to collect the refuse, it failed because it was so widely dispersed. While the refuse has protein and oil, it deteriorates quickly.

The major industrial use of coconut in Sri Lanka is in the form of copra which is expessed to yield edible quality white coconut oil of less than 1% FFA, while the resultant by product viz. copra expeller cake popularly called "poonac" is used in the manufacture of animal feeds by itself or after solvent extraction of the residual oil which varied between 8-14%. The residual oil (industrial coconut oil) is mainly consumed by the Ceylon Oils and Fats Corporation in the manufacture of fatty acids and glycerine or used up by the soap industry. The Ceylon Oils & Fats Corporation is a major oil miller posessing both expeller as well as extraction plants. The Corporation also produces fatty acid and glycerine and is also the biggest supplier of poultry, cattle and pig feeds in the country. The largest oil mill in Sri Lanka is the British Ceylon Corporation, who is also a leading exporter of white coconut oil.

With regard to copra drying, an FAO report (39) on Sri Lanka stated that "the Standard Ceylon Copra Kiln in which the source of heat is an open shell fire, is in almost universal use and has been so for more than 50 years. A number of hot-air driers have been designed and patented by private individuals, but have not come into popular use. The "Standard Ceylon Copra Kiln" of 10,000 nut capacity produces excellent copra in 5-6 days, but it is too large for small holders whose lands account for more than 85% of total acreage. The high quality of Ceylon copra is not so much a result of research as of a process of evolution in which landowners, managers of states and skilled copra-makers of obscure status have played the largest part."

A paper by Banzon (39) states that the Ceylon Coconut Research Insitute when asked if in Ceylon, there are studies on coconut proteins for food, the answer was: There is no need to isolate or prepare the protein isolates because (1) the coconut is being eaten directly and therefore, there is no protein recovery problem and (2) it is preferable to convert the copra cake into animal protein (chicken, pork, etc.) which tastes better. However, in recent correspondence, Dr. Laurentius of Ceylon Institute of Scientific and Industrial Research stated that "in common with most countries in this part of the world, the nutritional problem centers around protein deficiency. Coconut is certainly a source of protein and much work has been done on the area of wet processing of coconut for recovery of oil and protein. While these processes have been technically proven, the economics are not that attractive and the oil extraction is still carried out from the dried meat of the coconut, i.e. copra. I do believe that if and when a process is developed for recovery of available protein, such protein would go a long way towards elimination of the protein deficiency situation."

There is some environmental concern in Sri Lanka over the washwater and coconut water released from desiccated coconut plants as previously described. However, the problem is not as severe as in the Philippines and there is probably little incentive or environmental pressure to utilize these wastes. The coir dust from the coir fiber industry presents a large disposal problem as this material is of limited use and mountains of this material are seen adjacent any coir processing unit.

According to Banzon (39), Sri Lanka has some big problems: (1) the limited area of the island prevents any large expansion of coconut plantings. If production is to increase, greater reliance must be placed on yield of nuts per tree; (2) because a large amount of coconut milk (gata) is consumed every day, less coconut is available for export and a large amount of residue (sapal) goes practically to waste or is used uneconomically. There is now a scheme to extract the oil from the sapal. The problem is collection from the scattered households.

India

According to Banzon (39), 64% of the coconut production is consumed as fresh coconuts for household purposes; a total of 84% of the total production is used for edible purposes, either as fresh coconuts, edible copra, or cooking oil. (In Ceylon, the figure is 70%) While there is some room for new planting, there is very small possibility of coconut production catching up with population in India. The problem in India is increasing production; hence, research is concentrated on agricultural aspects. Hence, India now is a net importer of coconuts.

The above described situation explains why a recent report on India states that ". . .research on the utilization of the coconut kernel as human food as opposed to copra production, has not been of such urgent importance in India. . ." Dr. Hab Parpia, Director of Central Food Technological Research Institute (CFTRI) stated that research on the coconut, while still regarded as important, has to be relegated to second priority as a subject for study because (1) coconut is already being consumed as food; hence, no need to separate the protein, (2) there are other more pressing problems on foods in India, like rice processing and storage. Peanuts is the object of greater research effort because it is grown extensively and expansion is easily possible.

Keyna (42)

Kenya grows large quantities of coconuts along the coast, and also imports copra from other countries to press for oil and feed. It might be possible to use the cake as a source of protein for human food.

Ghana (42)

Crystal Oil Mills is 50% privately held and 50% government held. It primarily processes copra and groundnuts into oil and animal feed.

Two-thirds of the copra cake used to be exported, and Crystal Oil Mills had a share of this market. Now, because groundnut cake is in short supply (groundnuts are smuggled to Upper Volta and used for purposes other than oil, evidently because of local price controls) all the copra cake and groundnut cake are used domestically. Crystal Oil Mills cannot compete with the traditional cottage coconut oil industry in obtaining raw material because its price for the finished product is controlled, while that of the cottage industry is not. Therefore the local industry has 60% of the market for coconut oil, with Crystal Oil Mills processing 1,000 long tons/yr of copra (10 tons/day) and the Tema Food Complex Corp. 80 tons/day.

Mr. Toft, Managing Director of Crystal Oil Mills, reported that copra cake sells for 15 cedi/140 lb. bag (approximately $0.09/lb at the official rate of exchange, which is greatly above the unofficial rate), groundnut meal, which has twice the protein content, at 25-30 cedit/140 lb ($0.15-0.19/lb), cottonseed meal at 25-30 cedi/140 lb ($0.15-0.19/lb), and fish meal at 35-40 cedi/110 lb ($0.28-0.32/lb.

In conclusion, there is a severe shortage of animal feed in the country. Since the village coconut oil process is inefficient (40% of the original oil remains in the cake after pressing) and its copra cake is thrown away, price control has apparently distorted the production of feed for local and export use. In addition, price control has evidently diverted groundnuts to other uses and other destinations.

Of considerable interest in view of the coconut oil pricing situation faced by Crystal Oil Mills, was the fact that Technoserve is now trying to assist the development of byproducts from the village coconut oil process.

COCONUTS - REFERENCES*

1. Abdon, I.C., "Chemical and Physical Properties of The Flour Prepared from Unpared Dehydrated Coconut," M.S. Thesis, University of Philippines, 1967.

2. Dr. Karl F. Mattil, Texas A&M University, Private conversation.

3. Baldus & Co., Integrated Coconut Processing Plant: An Agro-Industrial Concept (21, Alstertor, Hamburg, W. Germany).

4. The Chairman, National Economics Council, Manila. "An Application for UNDP Assistance for the Development and Better Utilization of Coconut Protein."

5. League for International Food Education, Newsletter, September, 1971.

6. Steinkraus, K.H., "Opportunities for Coconut Research at the U.P. College of Agriculture."

7. T.A. Masulit, Philippine Coconut Authority.

8. Woodroof, J.G., "Coconut: Production, Processing, Products.

9. Mervyn Pulle, Dept. of Agriculture, U. of Sri Lanka, Perideniya, Sri Lanka.

10. Alcantara, J.A., Del Rosario, E.J., "Enzymatic Treatment of Coconut Meat Products." Report, 1/31/76, UP Los Banos, Philippines.

11. Colin H. Watson, Franklin Baker Co of the Philippines

12. Bienvenido C. Sison, Jr., "Disposal of Coconut Processing Waste", Blue Bar Coconut, Philippines, Inc. Lusacan, Tiaong, Quezon, The Philippines.

13. Josefina Bulatao - Jayme, M.D., National Science Development Board (NSDB) Philippines.

14. Tropical Products Institute, "Development of a Wet-Coconut Process Designed to Extract Protein and Oil from Fresh Coconut". TPI Report G78.

15. Author unknown, "The Coconut Industry in the Philippines, 1968".

16. Samson, A.J., "Heat Treatment of Coconut Meats and Coconut Meal", J. Sci. Fd. Agric., Vol. 22, (June), pp. 312-316. (1971).

17. T. Ramakrishnan, Indian Institute of Science, Bangalore.

* - Most of these references are in form of correspondence.

COCONUTS -
REFERENCES

18. Mrs. T. Edwards, Canned and Preserved Foods, Ltd., Colombo, Sri Lanka.

19. Olympia N. Gonzalez, National Institue of Science and Technology (NIST) Manila, Philippines.

20. Dardjo Somaatmadja, "Fats and Oils Industry in Indonesia," Int. Develop. Res. Centre Workshop, 23-25 March, 1976, Selanger, Malaysia.

21. Van Veen, A.G., "The Bonkrek Toxins"(source unknown: Graduate School of Nutrition, Cornell University).

22. Export Advisor - 3, 1976.

23. Salon, D.T., Payumo, E.M., "Utilization of Coconut and Coconut Flour", NIST, Philippines.

24. S.F. Laurentius, Ceylon Institute of Scientific and Technical Research.

25. Export Advisor - 1976.

26. A.K.G. Desai, Supply Wing, Embassy of India, Washington, D.C.

27. Updegraff, D.M., "Utilization of Cellulose from Waste Paper by MYROTHECIUM VERRUCARIA", Biotechnology and Bio-engineering, Vol. XIII, pages 77-97 (1971).

28. Hagenmaier, R.,"Coconut Aqueous Processing", Publics Office, Univ. of San Carlos, Cebu City, 6401, Philippines (1977).

29. K.H. Steinkraus, "Research and Traditional, Oriental and Indian Fermented Foods," Fermented Foods, Current Science and Technology, 8th Annual Symposium, Nov. 15, 1973, Cornell University.

30. Mattil, K.F., "Development of a Scientific Basis for the Manufacture of Low-Cost Protein Foods and Beverages from Fresh Coconut." Final report, U.S. Agency for International Development, Sept., 1970.

31. "Guide to a Successful Preparation of "NATA" from Coconut Water", Biol. Res. Ctr., National Institute of Science & Technology, Philippines (Manila).

32. "Vinegar Making from Coconut Water, Fruit Juices, or Palm Saps", ibid.

33. Hipolito, D., "Strawberry Flavored Protein from coconut water food for millions." Science Bulletin, pp. 60-68, Sept., 1963.

COCONUTS -
REFERENCES

34. Asian Coconut Community, "Establishment and Operation of a Pilot Plant for Coconut Milk Production and Marketing for Consumer Acceptance." 1976.

35. Arbianto, P. Untung, S.R., "The Breaking of Coconut Oil Emulsion by the Fermentation Method," A preliminary study.

36. "Coconut Cream," Bull. Institute Food Research & Prob. Develop. Kasetsart University, P. 15.

37. Ubolsri, Cheosakul, Applied Scientific Corp. of Thailand, Bangkok.

38. Lotho, C.E., Gonzales, O.N., "NIST Research Effects on the Laboratory, Bench Scale and Pilot Plant Utilization of Coconut Milk and Meat."

39. Banzon, J., "Coconut Processing in Ceylon, India, Malaya, and Indonesia, 2nd NRCP Conference on the Coconut," 7, May, 1969.

40. Renato, David M., Coconut Research and Development Center, Manila, Philippines.

41. Hagenmaier, R., Cater, C.M., Mattil, K.F., Aqueous Processing of Fresh Coconuts for Recovery of Oil and Coconut Skim Milk", J. Food Sci. 38, pp. 516-518. (1973).

42. Third site visit.

Coconuts

Resources - people, institutions, etc.

INDONESIA	Bandung Institute of Technology Chemical Technology Department 10 Djalan Ganesha Bandung, Indonesia	Coconut shells
	Dr. Purwo Arbianto Dept. of Microbiology (Chem. Tech. Dept.) Bandung Institute of Technology 10 Djalan Ganesha Bandung, Indonesia	Village scale production of coconut oil by fermentation
	Earl J. Goodyear, Director Care Medico - Jawabarat Ji Karangtinggal 32 Bandung Ph: 81709, Indonesia	Soybean curd Palm oil Copra waste
	Nasruddin Iljas, Dean Faculty of Agriculture Sriwijaya University Palembang, Indonesia	Copra Palm oil
	P. T. Ometraeo (organization) D. Setyadjie, Director Studies & Projects P.O. Box 197 Surabaya, Indonesia Phone (086) 43385-43379-43459-45244	
	Director Godofredo P Reyes, Jr. Asian Coconut Community P.O. Box 348 Jakarta, Indonesia	
	Jerry Van Sant, Director Church World Service Jl Dempo 3 (Matraman) Jakarta Telephone: 81683 Cable: CHURCHSERV	Village level production of coconut oil by fermentation (Dr. Arbiantos' sponsor)

Coconuts

Indonesia (continued)	Dr. Dachmat Soebiapradja Assistant for Production & Development Menteri Pertanian Republic Indonesia Staf Bantuan Urusan PNP/PTP Jl. Let. Jend. S. Parman 73 (slipi) Tilp. 59524-59100-59426 Tromol Pos No. 13/Palmerah Jakarta, Indonesia	Government owned coconut estates
	Dr. Dardjo Sumaatmadja Chemical Research Institute (Valai Penclition Kimia) Jl. Ir. Haji Juanda Bogor, Indonesia	Coconuts and palm oil
	Professor Winoto Fakultas Teknik UGM Sekip M/G, Tilpen 3518, Yogyakarta Indonesia	Coconut and palm oil
PHILIPPINES	Department of Agricultural Chemistry U.P. College of Agriculture UP Los Banos College, Laguna, Philippines	Coconut water Coir dust
	Ernesto J. Delrosario, Asst. Prof. Dept. of Chemistry University of the Philippines College, Laguna, Philippines	NSDB: acid hydrolysis of expeller coconut residue. NRCP: Coconut expeller residues treated with enzyme cellulose.
	Renato M. David, Research Assistant Coconut Research & Development Center #306, 1444 Jalandoni Building A. Mabini Street Ermita, Manila, Philippines	Comparison between wet & dry process wr products & byproducts
	Lydia C Crisostomo OIC Office of the Chief Laboratory Services Division Dept. of Agriculture Bureau of Plant Industry Manila, Philippines	Wine, vinegar and "hata" from coconut water

Philippines (continued)	Dr. Salome del Rosario Unlad Resources Development Corp. 826 Gen. Malvar Street Malate, Manila, Philippines	Coconut flour
	Dr. R. W. Engel Nutrition Adviser US AID R. Magsaysay Building 1680 Roxas Blvd. Manila, Philippines	Coconut flour
	Food and Nutrition Research Institute Pedro Gil St., Ermita Manila - 2801, Philippines	Coconut waste usage
	Forest Product Research and Industries Development Commission (FORPRIDECOM) College, Laguna E-109, Philippines	Coconut husk
	Engr. Garcia, Executive Officer National Science Development Board National Pollution Control Commission Manila, Philippines	
	Josefina E. Gonzales and Cristobal L. Miranda NIST	Biological evaluation of coconut flour, protein isolates
	Olympia N. Gonzalez Science Research Supervisor National Inst. of Science & Tech. P.O. Box 774, Pedro Gil St. Manila, Philippines	Utilization of coconut milk and meat
	Dr. Robert Hagenmaier U.S. Agency for International Development USAID/Philippines APO San Francisco 96529	Aqueous processing of coconut-Cebu City pilot plant
	Dolores G. Hipolito Biological Research Center National Institute of Science and Tech. P.O. Box 774 Manila, Philippines	Food yeast, rhodotorula rubia from coconut water-strawberry flavored

Philippines (continued)	Jaman S. Imlan, President Mindanao Institute of Tech. Kabacan, North Cotabato P.O. Box 328 Davao City, Philippines	Byproducts of coconut and uses
	Josefina Bulatao-Jayme Officer in Charge Office of the Director Food & Nutrition Research Institute Pedro, Oil St. Ermita Manila - 2801 Philippines	
	Laboratory Services Division Bureau of Plant Industry San Andros, Malato Manila, Philippines	Coconut water
	Conrado E. Lotho National Institute of Science & Technology	NIST research-lab bench scale & pilot plant utilization of coconut milk and meat
	Antonio C. Maceda, Jr. Manufacturing Manager Franklin Baker Co. P.O. Box 600 Manila, Philippines also (Colin H. Watson, Pres. & Gen. Man. Perry Quinitio San Pablo, Laguna, Philippines)	
	National Institute of Science & Tech. (NIST) P.O. Box 774 Pedro Gil Street Manila, Philippines	Coconut and other byproducts
	National Research Council of the Philippines U.P. Campus Diliman Quezon City, Philippines	
	Luz Paca National Institute of Science & Tech. (NIST)	Developing a pre-pilot yeast plant (coconut water)

Philippines (continued)	Estelita M. Payumo Scientist IV Food and Nutrition Research Center National Institute of Science & Tech.	Utilization of coconut and coconut flour
	Peter Paul Philippine Corp. 11th Floor, T.M.T. Building 6764 Ayala Ave., Makati Rizal, Philippines P.O. Box 1155, Manila	Coconut waste reported as coconut paring oil; copra cake, yeast, black oil - locally marketed
	Philippine Coconut Administration Mr. T. Masulit Elliptical Rd., Diliman Quezon City, Philippines	Coconut leaves (coir, coir dust)
	Dionisio T. Salon NIST, Scientist IV Food & Nutrition Research Center	Coconut and coconut flour
	Mrs. Luz C. Salonga, President Women Engrs. of the Philippines Dept. of Chemical Engineering University of Philippines Diliman, Quezon City, Philippines	Coconut waste treatment
	A. S. Samson SJ Dept. of Chemistry Ateneo de Manila University Loyola Heights Quezon City, Philippines	Coconut meats and coconut meal
	Food Prod. Research Texas Eng. Experiment Street Texas A & M University College Station, TX 77843, USA	Coconut meats and coconut meal
	Manolo M. Santos, President Saginco P.O. Box 257 Greenhills Post Office Rizal, Philippines	Coconut and banana flour

Philippines (continued)	Bienvenido C. Sison, Jr. Resident Manager Blue Bar Coconut Philippines, Inc. P.O. Box 344 MCC Makati, Rizal	Working on concentra coconut water by reverse osmosis process to get yeast, vinegar & dextran
	George Uy Optima Scientific Consultants, Inc. Suite 603 Trade & Commerce Bldg. 215 Juan Luna Street Manila U.P. P.O. Box 19, Diliman Quezon City, Philippines	Coco flour
	Dr. Jose R. Velasco, Comm. National Institute of Science & Tech. Pedeco Gil Street Manila, Philippines	Coconuts
RI LANKA	Ceylon Institute of Scientific & Industrial Research 363, Bauddhaloka Mawatha Colombo 7, Sri Lanka	Coconut
	S. F. Laurentius, Director Ceylon Institute of Scientific & Industrial Research 363, Bulleris Road Colombo 7, Ceylon Phone #91807	Recovery of oil & protein from coconut waste
	Mrs. Tanis Edwards, Tech. Dir. Canned & Preserved Foods Limited P.O. Box 480 126 Amthmawata Rd. Colombo 15, Sri Lanka	
	N. Pararajasingam, Finance Director Ceylon Tobacco Co. Limited P.O. Box 18, Colombo Phone #342314	Sugar products; Recycling sugar cane waste; Coco-fibre waste
	Mrs. I. Unamboowe, Librarian/ Documentation Officer Industrial Development Board of Ceylon 615 Galle Road, Katubedde Moratuwa, Sri Lanka	

Coconuts

Sri Lanka (continued)	Dr. U. Pethiyagoda. Director Coconut Research Institute Lumnuvila, Sri Lanka	
	Mr. M. Jeganathan Research Asst. in charge of the Chemistry Division Coconut Research Institute Lumnievila, Sri Lanka	
THAILAND	Dr. Amara Bhumiratana Institute of Food Research & Product Development Kasetsart University Box 4-170 Bangkok 4, Thailand	Production of coconut milk
	Ubolsri Cheosakul, Head Food Technology Unit Applied Scientific Research Corp. of Thailand (ASCRT) Bangkhen, Bangkok 9, Thailand	
	Dr. S. Malee, Dr. Kasem Balajiva Research Director Technological Research Institute Applied Scientific Research Corp. of Thailand Bangkhen, Bangkok 9, Thailand	
	Technological Research Institute Applied Scientific Research Co. of Thailand 196 Paholyothin Road Bangkhen, Bangkok 9, Thailand	Coconut water Coconut cream Coconut residue Coconut shell
DOMINICAN REPUBLIC	Departmento de Zootecnica y Nutricion Animales, Facultad de Ciencias Agronomicas y Veterinarias Universidad Autononoma de Santo Domingo Santo Domingo, Dominican Republic	Coconut cake
ENGLAND	J. E. Cecil Tropical Products Institute (TPI) 56/62 Grays Inn Road London WCIX 8L4	Wet processing of coconuts

Coconuts

England (continued)	Industrial Development Dept. (TPI) Culham, Abingdon Oxfordshir OX143DA England	
GUYANA	Guyana Besto Feed Factory 86, D'Urban and Smuty Str. Georgetown, Guyana	Copra Meal
	Guyana Stock Feeds Ltd. Ruimveldt East Bank Demerara Guyana	Copra meal
INDIA	T. Ramakrishnan Indian Institute of Science Bangalore - 560012 Phone #34411	Microbiological aspects of retting of coconut fibre
IVORY COAST	ITIPAT B.P. 8881 Abidjan, Ivory Coast	Coconut processing
PAKISTAN	Pakistan Council of Scientific and Industrial Research Block No. 95 Pakistan Secretariat, Karachi Pakistan	Green coconut shell
PORTUGAL	Instituto de Investigacao Agronomica de Mocambique (IIAM) Ciaxa Postal 1731 Mavalana, Lorenco Marques, Mozambique, Portugal	Copra
TRINIDAD	Trinidad and Tobago Coconut Research Ltd. P.O. Box 295 Port of Spain Trinidad and Tabago	Coconut Copra
UNITED STATES	Carl M. Cater Food Protein R & D Center Texas A & M University College Station TX 77843	

United States (continued)	Don Eastman, Vince Bavot Anderson IBEC Div. of International Basic Economy Corp. 19699 Progress Drive Strongsville, OH 44136 216-238-5800	Carver-Greenfield process for coconuts; mfr of expeller presses - Mexico plant
	Robert Hagenmaier Food Protein R & D Center Texas A & M University College Station, TX 77843	
	Varnam D. Luddington 126 Bruce Drive Cary, North Carolina 919-467-6058	Retired General Foods, Franklin Baker Div., Philippines-Coconuts
	Dr. Karl Mattil Food Protein Res & Develop Ctr. Texas A & M University College Station, TX 77843 713-845-7033 (work) 713-846-5006 (home)	Oilseeds research including wet processing of coconuts
	Reginald Meade 551 Gem Street Tulare, CA 209-686-0116	Retired Food engineer Pillsbury; worked in Philippines
	Dr. Roy Morse Rutgers University, Food Sciences Dept. New Brunswick, NJ 201-932-1766, 201-932-9665	Former VPRes Pepsico Carver-Greenfield Process
	Max Ruehrmund Franklin Baker Div., General Foods P.O. Box 600 Dover, DE 19901 302-673-2020	Dessicated coconut plant in Philippines
	Dr. Keith H. Steinkraus NY State Agric. Expt. Station Cornell University Geneva, NY 14456 315-787-2276 (work) 315-789-6873 (home)	Fermentation of coconut oil emulsion

Coconuts

United States (continued)	Dr. Peter J. Reilly Department of Chemical Engineering Iowa State University of Science & Technology Ames, IA 50010	AID/LIFE
	Dr. Stanley M. Barnett Associate Professor of Chemical Engineering University of Rhode Island Kingston, RI 02881	Co-Chairman, AID/LIFE
KENYA	L. K. Korir Ministry of Agriculture Kenya	
GHANA	Mogens Toft Managing Director Crystal Oil Mills, Ltd. P.O. Box 421 Accra, Ghana	

COFFEE

The coffee plant grows in tropical areas and the largest amount is produced in Central America and Africa. Table 1 shows the world production of coffee.

Table 1 (1)

Coffee, Green

Country	1974/75 Total Production (in 1000 lbs)	1974/75 % export	1974/75 Value of export	1975/76 Total production (in 1000 lbs)	1975/76 % export
Brazil	3,638,250	68.6	981	742.900	65.2
Ivory Coast	595,350	98.5	309	615,195	98.5
Guatemala	330,750	88.7	173	363,825	89.4
Ecuador	155,453	86.6	68	108,486	80.2
Peru	119,070	71.1	35	119.070	70.4
Columbia	1,190,700	82.2	625	1,058,400	78.4
Ghana	5,954	68.9		5,954	66.7
Kenya	145,530	97.5	107	154,130	97.5
Tanzania	110,867	97.4	53	105,840	87.3
Zaire	148,838	80.2		134,285	88.7
Zambia					

While coffee is produced by almost all S.E. Asian countries, large production is only in India (86,000 tons) and Indonesia (23,000 tons). The bulk of coffee in India is produced from Coffea arabica, though other varieties are also becoming popular. The berries are dried, dehulled, graded and cured. Cured coffee beans are roasted and powdered. Coffee is also available in the form of flakes or tablets. Decaffeinated coffee and soluble coffee are also manufactured (2).

I. Wastes and Quantities

The coffee plant is a bush which can grow to more than six feet in height. It produces a crop of berries at the heart of which is a seed which when extracted, dried, roasted, and ground yields the familiar coffee product (3). A longitudinal view of a coffee berry is shown in Figure 1 (3).

Figure 1

Coffee Berry (3)

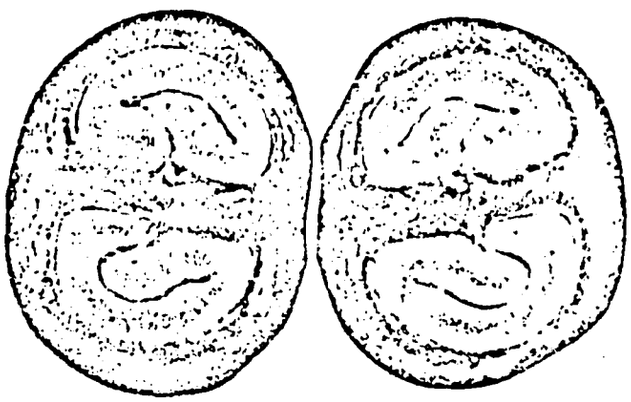

Longitudinal view of a coffee berry, showing from the exterior, the pulp, the mucilage that completely surrounds the seeds, and the two coffee grains

The overall production estimate for the 1974/1975 crop in Central America was 415,000 metric tons of dried dehulled coffee, which corresponds to 8.5% of total world production. As with many other agroindustrial activities all over the world, coffee processing plants have been facing major waste disposal problems because processing coffee fruits yields for each ton of dehulled coffee 4.5 tons of by-products (Table 2) (3). About 1.2 million bags of coffee are produced in Kenya. Assuming the standard 60 kg bag, about 360 million kg of waste are produced from the original cherries. It was indicated to an AIChE AID/LIFE team (4) that some coffee factories in Kenya have been threatened with closure due to effluent dumping.

Table 2

Coffee Beneficio Wastes Produced in Central America during the 1974-1975 Season (3)

	Metric Tons
Total dried dehulled coffee production[a]	415 000
Total coffee berries processed[b]	2 075 000
Waste material produced[c]	
Pulp (100:40)	830 000
Mucilage (100:20)	415 000
Hulls (100:3.4)*	70 000
Process waters, million[d]	(0.7–14) × 10^5

[a] Panamerican Coffee Bureau estimate (2). [b] From the ratio, dried dehulled coffee: coffee berry = 1:5. [c] Calculated from coffee berries: waste ratios as indicated. [d] Four to 80 gal of water per 100 lb of coffee berries

*Husk in India - 60,000 tons/yr (2)

II. Coffee Processing

Green coffee is produced in two ways; a dry method and a wet method. Only Brazil uses the dry process and almost all other countries use the wet process (1). The flow diagram for both processes is shown in Figure 2.

In the wet method coffee berries are first dumped into a receiving tank full of water. The berries that float are processed separately because they are of lower quality. The normal coffee berries are transported with water to the pulpers, where, by mechanical action, the pulp is separated. Depulped berries are sent to classifiers where unpulped or partially pulped berries are separated for reprocessing in a "repass" pulper. The main portion of the freshly pulped bean is sent to fermentation tanks. After the water is drained the masses of beans are left for several days with occasional manual turnover so that the mucilage can be biodegraded by natural coffee enzymes and microflora. This step by itself is critical to the coffee's quality.

After fermentation the coffee grains are washed with water in special channels where again light beans, or "floats" are separated. Washed grains

Figure 2

Green Coffee Production Processes (1)

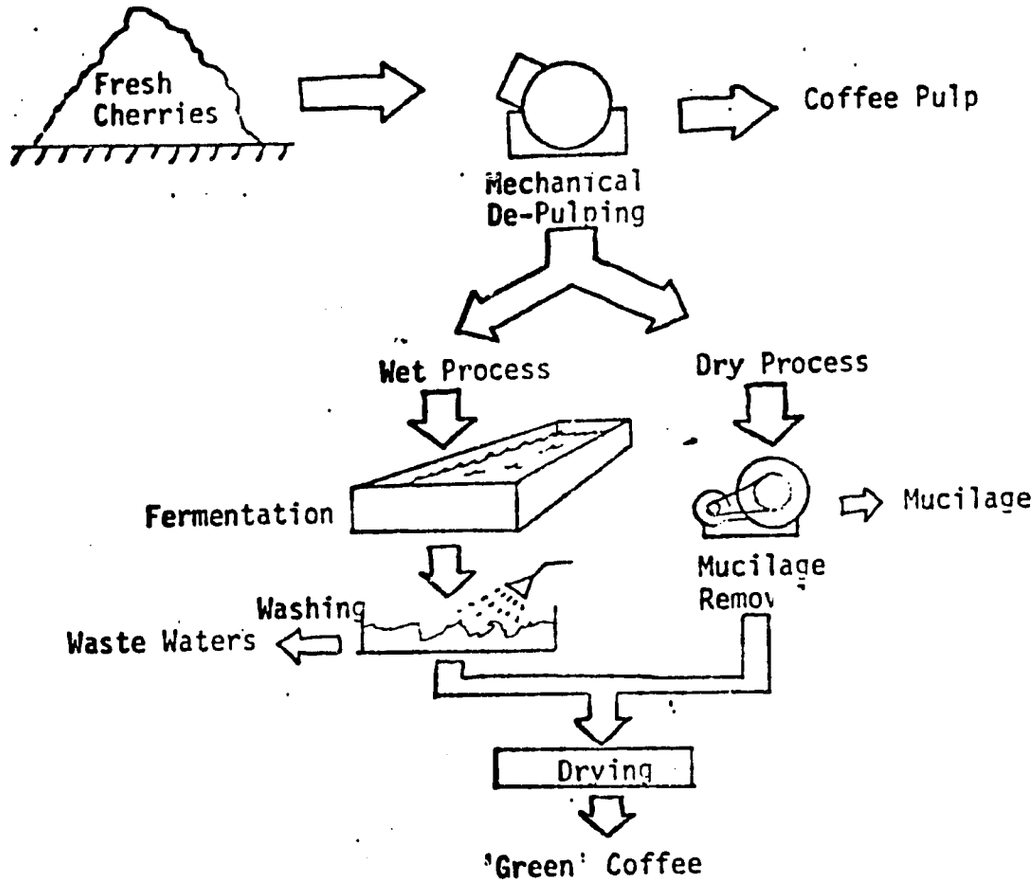

are sent to drying terraces (patios) where moisture is evaporated by solar energy until a critical level is reached; then the grains go to rotary dryers where moisture is reduced to about 10%. The dry coffee grains are then mechanically dehulled and the dehulled grains or green coffee is bagged and exported (3). The details of a coffee processing plant in Kenya visited by the third AIChE team is given in a separate appendix.

The raw coffee contains 10% oil and wax. The bean oil has the following characteristics: S.G. 0.94; soap value 160-180; iodine value 79-98; unsaponifiable matter 6-10%; saturated acids 37-40%; and unsaturated acids 51-54%. It may be worthwhile to explore the possibility of extracting the oil before roasting (2).

III. Current Disposition of the Wastes

The wastes generated during the production of green coffee are:

- coffee pulp
- hulls
- mucilage
- wash water
- fermentation water

Coffee pulp, mucilage, wash water and fermentation water are part of the wastewater. Table 3 shows an analysis of the wastewater from two coffee beneficios. The average per cent composition of husks from C. arabica and C. robusta (India) is given in Table 4.

Table 3

Wastewater Analysis of Two Coffee Beneficios (3)

	Montealegre		El Molino	
	Pulping waters, g/l.	Wash water, g/l.	Pulping waters, g/l.	Wash water, g/l.
Total COD	28.2	10.5	13.9	2.9
Soluble COD	—	8.8	5.2	2.5
Total nitrogen	0.67	0.34	1.39	0.95
Total solids	16.7	7.28	13.15	5.06
Soluble solids	—	—	10.96	3.78

Note: Combined effluents from *beneficio* Curazao, showed soluble COD ranges of 15-30 g/l. in three months' sampling.

Table 4

Husk Composition (2)

	C. Arabica	C. Robusta
Ash	6.5	4.4
Protein	9.2	9.0
Crude fibre	39.1	38.0
Water extract	25-35	30-40
Caffeine	0.3 - 0.6	0.2 - 0.5

The amount of fresh pulp generated at a processing operation can be calculated as being roughly twice the weight of green coffee produced (1). In its fresh form the pulp contains about 42%-43% moisture and 9%-10% sugars. Therefore, the quantities of coffee pulp sugars generated by processing can be obtained by multiplying the weights of green coffee in Table 1 by 0.19 (or about 20% of green coffee weight).

The pulp is practically all used today as agricultural mulch and soil conditioner and the hulls, mostly cellulose and related polysaccharides are burned to heat the dryers in the coffee plant(3). In India, the husk is composted and used as manure on the plantation. It has also been used as a nutritious roughage (2).

In many countries while pulp is sometimes used as a fertilizer or as a soil conditioner it is more often dumped, either into rivers, or into large heaps where it is allowed to decompose. A number of attempts have been made to find a more productive use for this pulp but those have had limited success due primarily to its high moisture content and to its content of certain toxic products (5).

Mucilage and the end products generated by its natural fermentation, accumulate in the processing waters (Figure 3). In processing units where water is plentiful, it is used once-through in the operation and discarded directly into rivers. Where water is scarce, water recycling is practiced and effluents are accumulated in evaporation ponds for anaerobic digestion (3).

In Kenya large quantities of hulls, skins and mucilage are generated (1). The polysaccharides (mucilage) are washed away. The cherry skins are used as mulch or are left on piles, and the bean shells and silver skins are wasted. The leaves can be used for cattle concentrate (4).

Figure 3

Production and Utilization of Coffee Wastes (3

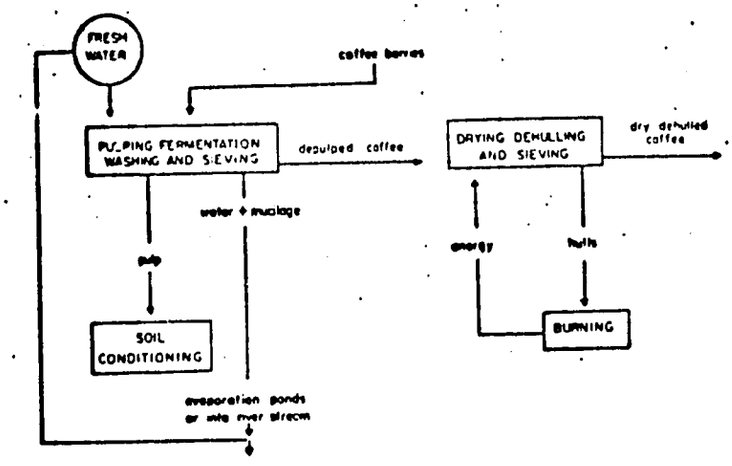

IV. Utilization of the Residues

A. Pulp as Animal Feed (5)

In recent years there has been some interest in Central America in examining the potential of dried coffee pulp as a livestock feed. The significance of this can be appreciated from the fact that there is a potential for producing between one and one-and-a-half million metric tons of dried coffee pulp every year in Latin America alone. This pulp consists mainly of carbohydrate but also has around 10% of good quality protein. Theoretically, it should be possible to use the pulp to replace cereal grains (which are frequently imported in Latin America) as a component of compounded livestock feeds. However, in practice the use of coffee pulp in animal rations causes a reduction in both liveweight gain and milk production.

In order to investigate the reason for this, IDRC approved a project early in 1973 to enable the Nutritional Institute of Central America and Panama (INCAP) to intensify their work on developing practical and economic

rations for livestock based on the use of high levels of coffee pulp. INCAP is attached to the Panamerican Health Organization and is recognized by the University of Guatemala. The research is being led by Dr. Ricardo Bressani, Head of the Institute's Agricultural and Food Science Division. The goals of the project are to identify the substances present in coffee pulp that are responsible for its inhibitionary effect in animal rations and in developing processing techniques to reduce or eliminate the toxic substances in order to improve the nutritional value of the pulp.

The researchers have determined that there are at least three groups of substances in the pulp which act as inhibitors of growth. One of these is caffeine, which appears to increase the animals' thirst and subsequently leads to an increased urinary output. With diets high in coffee pulp this reduces protein retention unless supplementary protein is given in the diet. Other growth inhibitors in the pulp are tannins and polyphenols. The exact mechanism of the effects of these compounds is not fully understood but it appears that they also inhibit protein digestibility, so that when rations containing more than 15 to 20% of coffee pulp are used they require to be supplemented by expensive protein if weight gains are to be maintained. Since coffee pulp can be collected, dried and marketed at a price equivalent to about a third of that of cereals, it would be an extremely attractive proposition to be able to include it in rations at levels of 40 to 60%. However, for this to be done the effects of the toxic elements must first be either reduced or eliminated.

Work done to date has shown that the toxicity can be reduced by aging the pulp, by ensiling it before drying it and by decaffeination through washing. Further work on these techniques is in progress and a follow-up project is under discussion which has the objective of determin-

ing the precise significance of the individual toxic substance and of refining the techniques for neutralizing or eliminating them. At the same time it is planned to develop a program at the farm level to assess the economic merits of the technology already developed for using coffee pulp at levels of 15 to 20% in the rations of cattle and swine.

B. Growth of Fungi on Coffee Wastes

A joint project between Denver Research Institute and the Central American Research Institute for Industry (ICAITI, Guatemala) is being conducted on growing fungi on organic wastes from the rum distilling and the coffee processing industry in Central America (6). The plan called for research to be carried on at both institutes on the fermentation of the wastes with Fungi Imperfecti in order to produce cell biomass for use in an animal-feed supplement. A three-phase program was planned. Phase A, now completed, involved the screening of many fungus cultures on the wastes in order to select those giving the highest growth rates and maximum biomass. Phase B involved growth-optimization studies on the selected fungi, Paecilomyces elegans, Aspergillus oryzae, Myrothecium verrucaria, and Trichoderma viride, in laboratory fermentors up to 14-liter size, and the development of a simple and economical continuous nonaseptic fermentation process for producing a good yield of cell biomass. The four fungi mentioned have been cultivated successfully in both batch and continuous fermentation under both aseptic and nonaseptic conditions on blackstrap molasses medium and spent wash from a rum distillery. All have also been cultivated in aseptic batch-type fermentations on coffee-processing wastes. Chemical analyses showed that A. oryzae had a significantly higher protein content than the other fungi. Continuous nonaseptic fermentations of coffee wastes have therefore been carried out only with this culture. Sufficient mycelium has now been produced for the initiation of AOAC protein-efficiency-

ratio feeding tests on groups of 10 weanling white rats. If the feeding tests give encouraging results, Phase C, "Pilot Plant Construction and Scale-Up", will be undertaken (4).

The ICAITI project of greatest interest to the second AIChE team (1) involved the aerobic non-aseptic growth of T. harzianum on coffee waste waters. "T. harzianum Rifai" fungi showed good growth near pH 2.0 where contamination was relatively low. Experimental fermentation, both batch and continuous, were monitored for pH, oxygen consumption, cell mass, COD, and nitrogen and phosphorous concentration. 73% of the initial COD was consumed in 24 h while a net gain of 3.2 g/l. of solids was achieved. Since the fresh medium contains some suspended solids, a more meaningful measurement of cell mass increase was obtained by determining the Kjeldahl protein content of the dried solids. Such assay showed an increase in protein of up to 56% of the dry solids at the end of the batch (3).

The microbial protein produced from this process is intended for use as monogastric animal feed. A pilot facility located in San Salvador, C.A. has been operated with some success. Additional pilot studies are scheduled for early next year at ICAITI using a newly installed $7m^3$ airlift fermentor (1). The most important factor to be taken into account is that higher productivity of the batchwise plant could be obtained if a higher concentration of carbohydrates and soluble solids were present in the feed. This situation could be achieved by modification of the beneficio operation - i.e., mechanical removal of a major part of the mucilage, using as little water as possible, before it is broken down by natural fermentation (3).

From cursory observations (1), problems with oxygen transfer seem to be the limiting processing factor while the economics of the process are still questionable. At present, coffee processing in San Salvador yields a waste much higher in BOD than in other parts of Central America and is

really the only country which might benefit from such a process. Feed prices, with the exception of cotton seed meal, range between $240 to $360 per ton. It is hoped that the microbial protein from this process could be produced for under $200 per ton.

Yeast, especially Candida sp. was another alternative selection for a suitable microorganism, although traditionally yeast has been grown in such liquid by-products as cane molasses, sulfite spent liquor and whey. Since yeast is usually grown batchwise under aseptic conditions, it requires a large fixed investment. Although fungi can also be grown batchwise, they can be handled under septic conditions via a more simple process (3).

V. Summary and Conclusions

Runoff from discarded pulp and wash and waste waters evidently are an environmental nuisance in some parts of coffee-growing areas; especially so where water is limited. The major impact is evidently the oxygen depletion of streams although the odors and vermin spawned by pulp dumps are also bothersome (1). Hence utilization of these wastes would be worthwhile. The utilization of coffee grounds does not present serious problems. Research into further utilization of these end products is well underway. However, with an increasing production of instant coffee in developing countries, new pathways of residue utilization might have to be pursued (7).

The third AIChE site visit team (4) indicated that fermentation of coffee mucilage to single cell protein would be a suitable project in Kenya. Kenya has a nucleus of trained personnel and good facilities at the University of Nairobi, and to a somewhat lesser extent at Egerton College, and a growing environmental awareness. However, USAID involvement in coffee waste processing is not recommended because (1)

a) Very good work has been and is being done on this problem by the ICAITI group of Mr. Carlos Rolz in Guatemala. They have investigated several uses for pulp sugars, and are carrying out a fermentation process development at the present time.

b) Most coffee processors are small. Transportation in coffee growing areas is usually difficult. Thus, it is not feasible for one processor alone to justify capital investment for a waste processing plant, and doubtful whether the wastes could be collected at a central facility for processing on a larger scale.

References

1. Barnett, Stanley; Nystrom, John; Dunlap, Charles: Trip Report, AIChE - AID/LIFE Survey Team II. Oct. 23-Nov. 17, 1976.

2. Bhushan, Bharat, Regional Research Laboratory, Hyderabad, India, "Agricultural Residues and Their Utilization in Some Countries of South and South East Asia". Industry Sector Seminars, Residue Utilization - Management of Agricultural and Agro-Industrial Wastes, FAO, Rome 18-21 January 1977.

3. Clark, R. J., "Protein From Waste, Growing Fungi on Coffee Waste", pp 636-641. Chemtech, October 1976.

4. Reilly, P., Barnett, S., Schopmeyer, H., Third Site Visit, AIChE - AID/LIFE Project, January 3-29, 1977.

5. Nestel, B.; "Waste Not, Want Not", IDRC Reports, Vol. 4, No. 3, September 1975.

6. Updegraff, D. M.; Espinosa, Rodolfo; Griffin, Larry; King, Jeannette; Schneider, Sheryl; Roby, Carlos, "The Production of Animal Feed by the Growth of Fungi on Wastes from the Coffee and Rum-Distilling Industries", Developments in Industrial Microbiology, American Institute of Biological Sciences, Washington, DC, 1973.

7. "Residue Utilization - Management of Agricultural and Agro-Industrial Wastes", Report of the UNEP/FAO Seminar on Residue Utilization - Management of Agricultural and Agro-Industrial Wastes, Rome, 18-21 January 1977.

Coffee Processing Plant in Kenya (4)

Corina Coffee Plant
Del Monte Ltd.
Thika

Present:

David Harries, Plant Manager, Corina Coffee Plant
G. B. Adams, Kenya Canners
H. H. Schopmeyer, Peter J. Reilly, and Stanley M. Barnett, AIChE/LIFE

Del Monte processes coffee by the wet process (seen by the second term in Guatamala and Colombia) not far from the pineapple cannery, after growing the berries itself on land rented from the government. The berries are picked by hand and delivered to the plant by truck for hulling. Preferably they should be deep red to slightly brown in color. The first step consists in removing the outer husk, which is done by a pulper, which consists of a steel burr which is set to rub the berry against a rigid bar to break the outer shell or husk loose without breaking the coffee bean inside. Under the outer shell is a layer of mucilage about 1/16 in. thick which must be removed by fermentation. The hulled beans from the pulper are flushed into concrete bins about 6 ft deep, 8 ft wide and 20 ft long. The water is drained off and the beans allowed to stand for about two days, during which time considerable fermentation by wild yeast takes place to loosen the mucilage. The beans are washed from the fermentation bins into a second bin and held for an additional 12 hr to remove additional mucilage, then run to a concrete tank about 20 ft in diameter equipped to hold a layer of beans about 3 ft deep. Atmospheric air is blown underneath the beans to dry them from 50% moisture to about 40% moisture. From this stage the beans are spread over long trays about 3 ft wide and 50 ft long and about 3 ft above the ground, covered with black plastic sheets, and allowed to dry in the sun for about 7 days with hand turning to about 10% moisture.

An alternate scheme for drying coffee beans has been installed, which consists of an open steel tank about 15 ft in diameter equipped with a perforated screen false bottom, so that heated air from an oil burner can be blown up through the coffee beans. The beans can be agitated by a number of ploughs during drying so that they dry uniformly and do not overheat.

The dried beans have an outer layer called "silver skin" which must be removed. This is done at a central plant operated by the company in Nairobi. The silver skin or hull amounts to about 50 to 60% of the weight of the beans from the dryer on lightweight coffee beans and from 20-23% of dried heavy beans. The silver skin is largely fiber and is of no commercial value at present. After removal of the silver skin the beans are ready for roasting, which is generally done in the country purchasing them.

One ton of skinned 10% moisture beans requires 6 tons of fresh picked beans.

The outer hull which is removed during the pulping operation is run along with the wash water into a large pit to rot. It is later used as a mulch around the coffee trees.

Two kinds of coffee are grown in the various coffee producing countries: arabica, which is considered to be superior, and robusta, which is considered an inferior grade. Kenya grows arabica coffee and produces about 1,200,000 bags/yr of the world's 80,000,000 bags/yr production.

FISH WASTES

The impending world food and population situation has made it imperative that the most effective use of all available fish resources for human consumption should be carefully reviewed. The maximum benefits must be derived particularly in tropical areas where there is animal protein deficiency in food consumed. It has been the expressed concern of many developing countries that mechanized fishing off their shores remove large quantities of fish which, whether as fishmeal or quality products, are destined for the consumption of more developed and much richer countries where there is no animal protein malnutrition or even food shortage. In developing countries the former attitude, that the quick basis for the industrial development of fisheries can best be established through fishmeal production and other export products like lobster, shrimp, tuna is gradually giving way to the need for the industry to focus on domestic self-sufficiency in food. This has elevated the value and importance of fish as an important protein source and thus its transformation and presentation as highly acceptable hygienic product for human consumption. This change in policy is being brought about by higher import costs of food, inflationary costs of imported machinery and technology, the law of the sea portents and considerations and improved processing technology like meat and bone separators (1).

The major fish wastes are trash fish (especially from shrimp trawling operations), pollutants from fish processing operations e.g., stickwater, and wastage due to spoilage, poor

handling, or insect infestation. Fish processing wastes are somewhat used. However, up to 10 million tons per annum may be wasted from the other sources.

Fishmeal production is by far the primary end product for those fish wastes which are presently utilized. Fermentation of fish waste into fish silage has received a great deal of attention in recent years as a means for the production of animal feed, or perhaps even human food. There are also a large number of relatively new and innovative ideas for new products and markets for fish waste.

The projected protein requirements in developing countries are high. Fish protein is badly needed to help fill the gap between available protein and these protein needs. There are severe economic and nutritional problems caused by loss and wastage of world fish resources. As there is every indication that exploitation is approaching the maximum in many areas, the only room for further increase of production will be by more effective utilization. There is thus an urgent need for development of technology in this area (2).

I. Residues

The major residues and losses in the fishery industries fall into three broad areas:

A. Trash Fish

In many fishing operations, particularly trawling, considerable quantities of low value or undesirable species are taken incidentally to the target species. Where the difference

in value is great, such as in the shrimp trawling industry. The low value species are frequently discarded immediately after the catch. It has been conservatively estimated that 5 million tons of by-catch is discarded annually by shrimp trawlers. This represents a net loss as the fish is dead when returned to the sea (3). A detailed description will be given on uses of trash fish.

B. Processing Wastes

Potential pollutants from fish processing operations which are discharged into water bodies or the atmosphere lead to environmental hazard as well as protein loss. These can range from the discharge of large volumes of effluent with high BOD to disposal of processing offal in unsanitary circumstances. There is no data to quantify these losses (2).

Fish and shellfish wastes from processing plants apparently do not create a significant environmental problem in developing countries. The major processing industries are frozen seafood and canning. The wastes from the frozen fish industry are entrails, gills, skins, fins, etc. Heads, claws, and shells result from processing shellfish, and stickwater results from canneries (3). These industries are presently converting mose of these wastes into fishmeal or fermenting them to fish silage. This waste utilization, however, is for economic rather than environmental reasons. It should be noted that large fish processing industries can handle their wastes more efficiently than the many small processors which dot the coasts of developing countries.

C. Spoiled Fish

The third major area where high losses occur is where fish is allowed to spoil or lose nutritional value as a result of bad handling or processing, before reaching the consumer. This can result from heavy landings without corresponding shore processing facilities or losses of dried fish from infestation by insects and rodents, representing a net loss of protein. It is difficult to quantify these losses, but an overall figure of 30% would not be unreasonable (2). In some areas losses of up to 50 percent are quoted, particularly for dried products by a large number of widely dispersed efforts in developing countries. It is difficult to quantify spoilage and infestation losses as catch statistics are less than adequate and figures are only available from a few limited studies. A global figure, often quoted but probably subject to wide error, is 5 million tons per year.

By its nature, fishing is seasonal and losses are particularly likely to occur at peak fishing seasons. Most of the by-catch discarded by shrimp trawlers is in developing tropical countries. These countries also account for a high proportion of spoilage and infestation losses during processing and distribution. Additionally, economics force the population to consume some spoiled or infested fish. The only alternative is direct feeding to domestic animals (ducks and pigs) or farmed fish. In developing countries, potential pollution from fish processing is not considered a major problem except where high

volume operations, such as fish meal production or fish processing are established.

II. The Utilization of By-Catch in Shrimp Fisheries (1)

The shrimp trawling by-catch of fish is a resource which offers an opportunity for food supply from tropical sea areas adjacent to countries whose populations are short of fish supplies. The vessels which are used, have been designed exclusively to cater for the shrimp caught. However, large quantities of fish are caught incidentally in the fishing operation and this "by-catch" is discarded at sea, or, in a few cases, converted to animal feeds. The value of this fish (about US 10 cents/lb average) compared adversely with shrimp (at least US $1/lb).

The problem is not only economic but also technological. In the tropical seas the number of fish species caught in a trawl may be at least 20 and more generally 50. They are variable in size, chemical content (white or oily) and among the mixture some may be poisonous. The quantity of fish caught will vary with the place (bottom type, depth and currents); time of day (fish are generally more active in daylight than shrimp); time of year (the rainy seasons cause outflows from distant estuaries which affect the availability of fish). Generally the weight of shrimp caught varies between 10% to 30% of the total landed by the trawl. The bulk of edible fish is thus at least 3 to 9 times the amount of shrimp caught. As some species of fish become mature and gravid the chemical composition

of the flesh and even its palatability varies. This mixed bag would be even difficult to process by reduction without some sorting between oily and white fish types. The crew abroad are too few to sort the bulk of fish since there is little time between the landing of the trawls. The operation is nocturnal.

For all practical purposes and operational efficiency, only the major quantities of acceptable market fish can be considered for collection aboard or easy processing ashore. Further, their availability must be assessed before industrial-scale processing can be considered. When such assessments were made along the Guyana shelf it was estimated that there was about 200,000 tons of consumable fish, involving 8 major "white-flesh" types, which can be obtained annually from the fleet of between 175 and 210 trawlers. By contrast the countries of the Caribbean import the equivalent of 150,000 tons of fresh fish annually. To test the particality of using this fish the last few days' catch of marketable fish was required from each trawler coming to Port of Georgetown. This catch totalled annually about 2400 tons which was to be converted into fish products which had been traditionally imported (i.e. salted and smoked fish). Additionally fresh fish sales were increased.

However the sudden volume of fish brought into the market circuit created problems in the handling, processing, cold storage and sales/distribution. This large through-put from trawl landings to the consuming public is not an easy transition in a tropical country unless an efficient industrial infra-

structure for handling fresh or iced fish exists. With fish spoilage and waste a spirit of frustrating discouragement feeds back both to the shore handlers and the fisherman who bring in the by-catch.

Additional products are being prepared from fish flesh of mixed species obtained through the use of meat and bone separators. It is planned that these comminuted fish products will form the basis of a new series of products to make use of the bulk of fish obtained as the trawler by-catch. The mixed fish flesh will thus not be readily identified as to species and form a new material from which hygienic edible products of both low-value and speciality types are made.

At an IDRC workshop held in Thailand (1974) similar situations were described in South East Asia. A parallel approach was being made through their fish technology laboratories in India, the Gulf of Thailand and Indonesia to solve the problem of the waste of the by-catch. It was pointed out that without any increase in fishing effort on the stocks of fish, more than 1 million tons can be thus available from the by-catch of shrimp trawling in that area.

Since it is generally accepted that such a waste of consumable fish is unacceptable, solutions for its satisfactory use are being sought throughout the tropical world. These approaches are considering ways of handling the fish at sea; systems for collecting and transportation from shrimp trawlers and the processing of a mixed bag of species.

The development of shrimp/fish separator trawls had given promise that this could facilitate the sorting of fish at sea. However, until the bulk handling of the by-catch can be proven practical and efficient at low cost, industrial scale processing ashore will not be readily applicable since the landed costs of the fish will be too high (before processing) for low-income consumers which is the target population.

Processing of the mixed bag of fish has been experimented with using deboning machines which provided an extruded flesh quite free of bones, scales and skin. This waste can be converted to fish meal while comminuted fish flesh is now a new raw material, comprising of various species of fish which cannot be visually identified by the consumer. Tests have been conducted in the IDRC project in Guyana using the comminuted flesh to make dried, spiced, or salted products which are stable at normal temperatures and can be packaged in sealed plastic bags and sold at low cost. Additionally the project plans to make products of higher market value. That portion of the catch which comprises fish of high consumer demand (whether through species or size) is to be processed as fillets or speciality products. The higher value products are intended to contribute appreciably to the processing costs permitting the bulk preparation of the lower-cost stable fish products which can be within the reach of rural and remote communities where electricity and refrigerated household or market storage are not widely available.

It is noteworthy that such products have also been made in other laboratories. A recommendation has been made that

industry should develop further their pilot operations using their locally designed machines. The products have a ready market acceptance.

III. General Fish Waste Utilization Techniques

Most of the fish waste which is presently used is used as fish meal. This industry is fairly large and well developed in some tropical countries while being quite primitive in others. With enormous fish wastes available, India produces only 5000 tons of fish meal. The present method of production, namely sundrying and powdering, is also inefficient and unhygienic leading to contamination of product with pathogens and sand (4).

There are a number of fermentation processes which have been applied to fish waste. These methods are primarily for the production of animal feed although they may be adapted to human food manufacture. Molasses or crude tapioca can be used as the necessary carbohydrate additive. This appears to be a useful method for utilizing the enormous amount of wasted trash fish.

A number of more end uses for fish waste have been developed in recent years, the most promising of which may be an extruded fish product from the mixed flesh of deboned trash fish species. Shellfish waste have also found new outlets recently.

A. Stickwater

Stickwater is the effluent produced during preparation of tuna blood meat and other canned fishes. After the fish is deboned and readied for canning, the blood meat or residue is boiled for use as animal feed. Oil is reclaimed by passing the

cooking water through a centrifuge. The oil-free waste stream-the stickwater-is actually laden with valuable soluble components such as proteins, lipids, mineral salts and B-complex vitamins.

Without proper treatment stickwater presents a major pollution and/or sewage headache. For example, National Packing Company, the Puerto Rico based subsidiary of Ralston Purina, produces about 900,000 cans of "Chicken of the Sea" tuna daily. An average production schedule yields as much as 9 tons of stickwater per hr. Waste treatment planning suggested using an evaporator to economically harvest its solids content for sale as a feed supplement.

A triple effect, forced circulation evaporator was chosen using horizontal heating surface to minimize fouling (5). Feed liquor into the evaporating system contains 5% solids, with discharge containing 50%. During normal operations a production rate of 1,8000 lbs/hr. of concentrate is realized from each 18,000 lbs/hr. of feed. Distillate is channeled from the evaporator through a secondary water treatment system before it is sent to the sewer. The reclaimed valuable wet solids are sent into retainer tanks at the plant for shipment to customers.

In Peru, stickwater is concentrated by ultrafiltration or evaporation, and the concentrate added back prior to drying (6). In Sri Lanka, stickwater is evaporated and added to fish meal at one plant and wasted at another (7). Nippon Junyaku Co., Ltd. of Japan has developed a process to recover protein from fish processing waste water by adjusting the pH to 5-6 and

adding air and a polyacrylic salt to precipitate the protein (8).

B. Fish Meal Production

Of the countries visited by the second AIChE team (6), Peru is the only one which has a significant fish meal processing industry and, Peru's is one of the largest in the world. The following table shows fish catch, meal and oil production, and other data for the Peruvian industry for the past two years.

TABLE 1

Peruvian Fishmeal Production

Fishmeal: Estimated supply and distribution

Calendar Year	Fish Catch	Meal extraction rate	Production	Stocks Jan. 1	Supply	Domestic Consumption	Exports
	1000 metric tons	Percent	1000 metric tons	1000 metric tons	1000 metric tons	1000 metric tons	1000 metric tons
1975	5,000	22.0	1,100	220	1,220	120	1,550
1976	6,000	22.0	1,220	200	1,520	120	1,280

Fish Oil: Estimated supply and distribution

Calendar Year	Fish Catch	Oil extraction rate	Production	Stocks Jan. 1	Supply	Domestic Consumption	Exports
	1000 metric tons	Percent	1000 metric tons	1000 metric tons	1000 metric tons	1000 metric tons	1000 metric tons
1975	5,000	6.5	325	75	400	90	175
1976	6,000	5.8	350	135	485	115	250

No data was obtained on the amount of wastes generated by the industry.

Fish meal is a major source of feed protein and is produced domestically from several meal and oil plants located on the Pacific seacoast. The government requires the industry to sell 20% of its production volume on the domestic market. The result is the availability of fish meal on the domestic market at an astonishingly low cost of 190-210 U.S. $/ton. Using a protein content of 66% this material supplies protein at a cost of 14.4-15.9 U.S. ¢/lb. protein. Value of fish meal on the world market is about 100 $/ton U.S. higher than its price on the domestic market (6).

Feed millers are able to obtain as much fish meal as they can use. However, a defacto limitation is placed on the demand for the material because of the predominance of poultry feeds and the fact that only a specific percentage of fish meal (less than total protein requirements) can be incorporated into the feed to prevent "fishy" tastes in meat and eggs (5).

In one plant in Sri Lanka (7), heads, tails, guts, and shells are processed into fish meal by grinding, pressure cooking and vacuum evaporating with steam to 10% moisture. The material is 45-60% protein and 3% or less salt, and comprises a quarter of the total catch. It is fed to poultry and swine, but not to cattle. Stickwater is vacuum evaporated and added to fish meal at this plant.

C. Fermentation

The numerous fermented fish products of the tropics play an important role in the local food complex. Their manufacturing process have been developed over long periods

to suit the climatic conditions and specific market demands. The level of technology varied but all processes are based on the proteolytic action of enzymes originating either from the fish, from the developing microflora or from both (9).

The renewed interest in fish fermentation is related to the desire to make the maximum use of trash fish and fish offal in situations where the quantity involved or the transport costs prohibit conversion into fish meal. This situation, which usually occurs in small fishing communities remote from the main fish processing centres, is most common in tropical countries (10). In small scale fisheries in the tropics daily and/or seasonal gluts of fish are common. Because of transport difficulities and inadequate processing facilities these surplus fish are often under-utilized. The quantities involved do not permit profitable fish meal manufacture as even the most modest fish meal plant requires regular supplies of several tons of raw material per day for viable operation. Ironically countries in this situation are often importing substantial quantities of fish meal to support their expanding animal production industries. Hence, a need exists for producing animal feed from trash fish at the village level.

Table 2 is a summary of fermentation methods which have been used for fish (11). These methods have a number of advantages from the point of view of their utilization under South East Asian conditions in that they do not require the utilization of imported additives, or particularly, chemicals which might be

TABLE 2

SUMMARY OF FERMENTATION METHODS (11)

	Product	Preservation method	Disadvantages for use in S.E. Asia
Group 1	Fermented fish products of S. E. Asia. eg. 'nam-pla' (Thailand) 'budu' (Malaysia).	Addition of 15-20% salt, anaerobic fermentation	1. High salt content limits protein intake.
Group 2	AIV silage for forage crops and other animal proteins.	Addition of strong mineral acids eg. hydrochloric and sulphuric acids.	1. Danger in handling strong acids. 2. Requires neutralisation before feeding. 3. Large production of silage juices.
Group 3	Chemical silage for forage crops and fish.	Addition of organic acids.	As group 2.
Group 4	Biological silage for forage and fish	Fermentation by lactic acid bacteria	1. Most suitable for S.E. Asian conditions.

dangerous in high concentration. Over the years, experiments have been continued on the fermentation of fish in order to obtain a product suitable for human consumption. Although some products have been found of an acceptable quality no serious attempts have been made to market them (7).

Low salt fermentation processes appear to be the most practical approach for small scale operations in tropical

environments for conserving trash fish. Materials common to the tropics can be used as carbohydrate sources for the fermentation, e.g. molasses, tapioca, cereal meal and malts. The end product of the fermentation is potentially to be used for either human food or an animal food. In the long term fermented low salt products might be of advantage for the human market, subject to the observation of the necessary food safety precautions, mainly to avoid hazards arising from toxin producing microorganisms and heavy metals.

Feeding trials carried out with fish silage made by lactic fermentation have shown that it is a good protein source for cattle and for broilers and laying hens. The work carried out so far indicates that fish silage can be made successfully under local ambient conditions, using local raw materials. The process does not need aseptic precautions, and it is impractical to be conducted aseptically. Although the process is simple, it is a controlled fermentation and certain precautions must be observed for a good fermentation. The first is the intimacy of the admixture of starch and fish. Thus the fish has to be finely comminuted and thoroughly mixed with the starch and other additives. A sufficient amount of carbohydrate has to be added to supply a fermentable source of sugars. The amount of carbohydrate necessary depends on the type of carbohydrate and the type of fish and has to be tried out for each type of raw material. However, the amount of carbohydrate can vary from 10% to 50% of the total weight.

The addition of an amylolytic enzyme source is also necessary so that the starch or carbohydrate can be hydrolyzed to sugars. A starter culture of lactic acid bacteria is also essential in order to cause a rapid drop in the pH of the mixture and prevent putrefaction. Finally, the fermentation should be carried out under anaerobic conditions to favour the growth of the lactic acid bacteria.

The earlier experiments have shown that mixtures of 50% fish to 50% carbohydrates will produce successful silages. However the volume of carbohydrate that has to be added could prove uneconomical. The alternative approach of adding small quantities of salt would appear to give a more practical process as the amount of carbohydrate required is much less.

A process for producing fish cheese from trash fish, similar to low salt lactic acid fermentation for making fish silage, has been developed (9). The product is intended for human consumption.

D. A Dried Fish Silage Product (10, 12)

Tropical Products Institute of London is investigating a means of producing dry animal feed at the village level. The process involves very simple equipment and skilled manpower is not necessary. Fish or fish offal is minced and acidified with a mineral acid to pH 3.0. Approximately 0.5 to 1.0% of formic acid is then added, largely as a preservative. Under these conditions the enzymes within the fish break down the tissues, and after 4 or 5 days the product becomes liquid. This product is known as fish silage. Fifty percent powdered cassava or

maize is then mixed with the silage to absorb most of the water. The resulting paste is then dried in the sun and subsequently powdered.

The dry powdered product can be handled more easily than the liquid silage, and has additional value as an animal feed. Feeding trials are at present being carried out. The product shows considerable promise as a means of utilizing waste fish in certain situations. Feeding trials with poultry suggest that the product could be used as a source of protein and energy for compounding feeding rations for poultry. The preparation of a dried silage product requires little skill and the equipment is very cheap. It is also dependent upon a supply of cheap labour.

A variety of fish silage products have been prepared in Ghana, Malawi and Brunei. In the Solomon Islands the intention is to prepare fish silage (either liquid or dried) as a means of utilizing offal and waste from a tuna cannery. Up to 4 tons of material per day are available but this is insufficient to justify a fish meal plant. The silage will be fed to pigs as a replacement for imported fish meal, this saving valuable foreign exchange.

E. Production of a Functional Protein From Fish Waste by Enzymatic Digestion (13)

Pilot plant studies are currently underway on producing a functional, soluble, high-quality protein product, which could have immediate marketability as a milk solids substitute in animal feed formulations and a good potential as a human food

additive. Figure 1 presents a flow chart of the enzyme digest F.P.C. process.

First, the raw material is mechanically deboned. The skin and bones can be dumped overboard if processed at sea, or reduced to meal or fertilizer ashore. The fish flesh is homogenized with water and placed into the enzyme reactor. Pepsin is the enzyme chosen for this process, since it allows good yields of soluble protein and has a low pH optimum (pH 2), resulting in minimal bacteriological problems during processing (7, 8). The enzyme breaks up the natural long-chain, high molecular weight fish proteins into smaller poly-peptides, peptides, and amino acids with an average length of three or four amino acid residues. These shorter molecules are very soluble in water and can be mechanically separated from most of the lipid present, and the insoluble sludge fraction can be separated by centrifugation. The soluble protein fraction, after centrifugation, is still at a low pH and must be neutralized before being dried. This is accomplished in an anion exchange reactor, where the H^+ ions are removed from the solution. The ion exchange resin is regenerated and recycled. The neutralized liquid is then concentrated and spray dried.

The raw material for this process can come from various sources, mainly process wastes, as from fillet and canning lines, and underutilized industrial (or trash) fish. The original development work on this process used English sole fillet waste. The process has also been shown to work well on salmon waste, assorted trash fish, and shrimp from "dirty"

shrimp trawls, and on hake. If the in-plant type waste is treated in a sanitary fashion, the flesh can be used directly for human food by various processes of deboning and patty or artificial cutlet information. However, even poorly treated scraps off the process room floor make acceptable input for the enzyme process. Yields will be somewhat lower for very poorly treated fish, since the lipid tends to become more tightly bound in lipo-protein complexes, and emulsions result which lower the soluble protein fraction during centrifugation.

Listed in Figure 2 are numbers for both an underutilized species (hake) and fish waste (cod fillet trimmings). Hake gets up to 80% recovery deboned, less if small or if a lot of shrimp waste is included. The fillet waste gives a yield of about 50%. Hake is also slightly higher in protein, 13% compared to 11 1/2% for the fillet waste. Pepsin is the largest process expense at the current price of $28 per round (USA) but there is confidence this cost can be substantially reduced. The raw material being used is hog stomach mucosa, giving about 4% yield of 1:10,000 N.F. pepsin.

The sludge is about 9% protein, has a good amino acid array, and is proposed as an animal feed, especially in formulations such as aquaculture fish feed, where insolubility is a positive factor. Inside the box in Figure 2, 2,700 gallons of liquid at about 7.5% protein goes to the anion exchanger. Nine hundred gallons of mixed bed resin will bring the pH to 7, and require 1,800 gallons of 1 N NaOH for reconversion. It is anticipated that both these quantities can be reduced. On

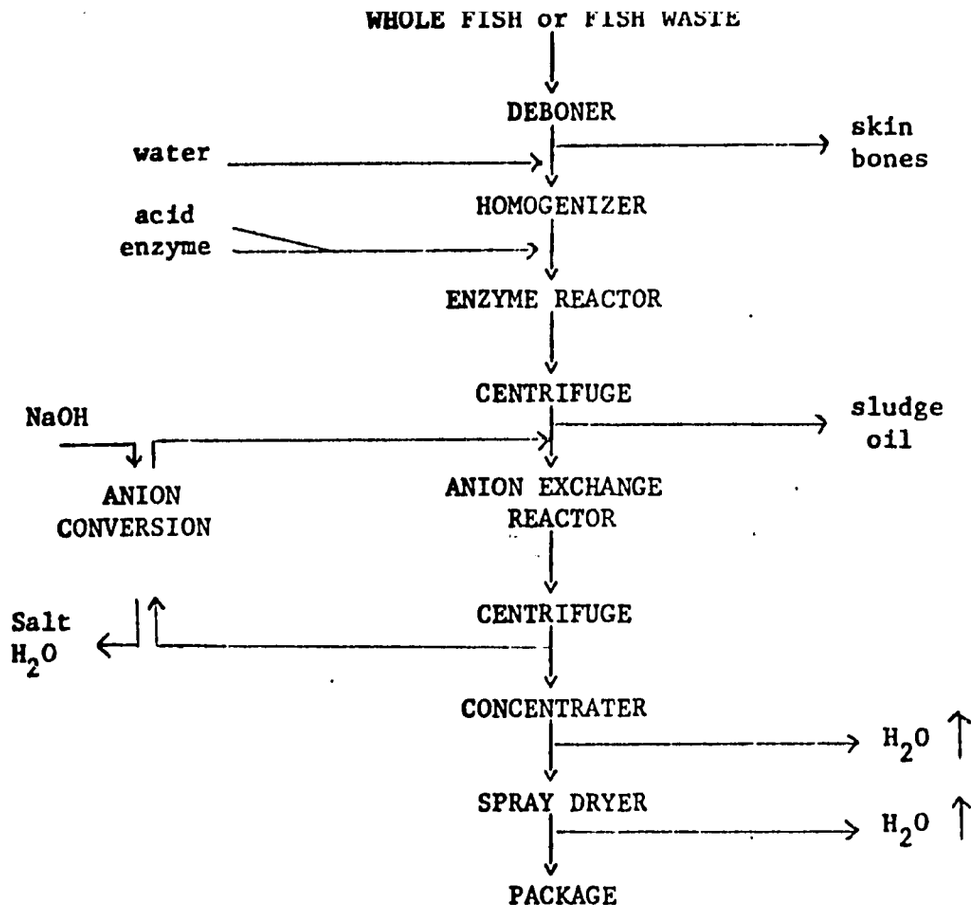

Figure 1. FLOW CHART - ENZYME DIGEST FISH PROTEIN CONCENTRATE (13)

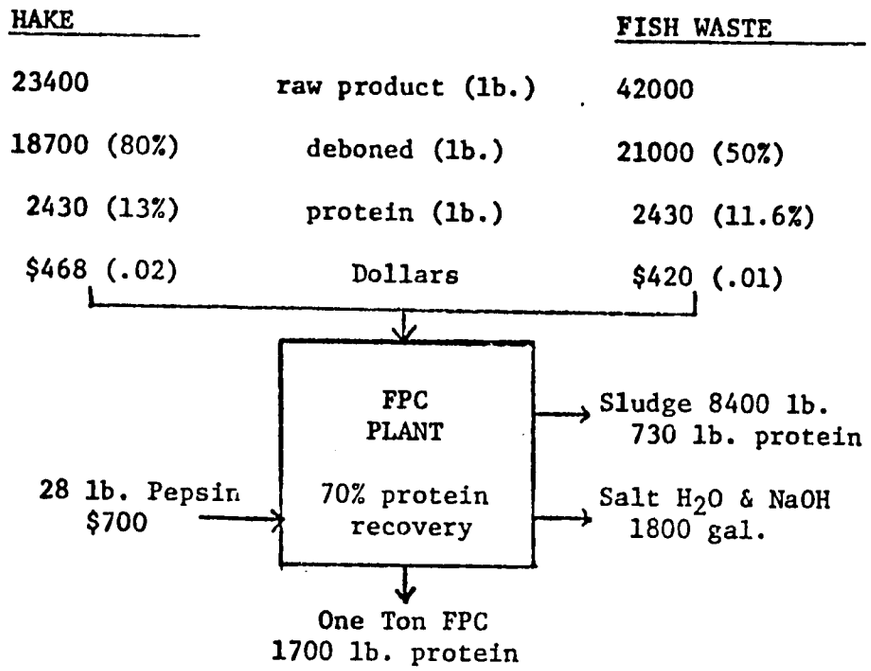

Figure 2 - Protein Balance - One Ton Final Product (85% Protein) (14).

the basis presented here, the per final product pound costs for pepsin are $0.35; for raw material, $0.23; and estimating $0.20-0.25 for processing, this product could be put out the door at a cost on the order of $0.80 per pound in the USA. This compares well with non-fat milk solids selling now at about $0.60 per pound at 35% protein, and with casein selling at $1.65 per pound.

F. Deboned Trash Fish (14)

Recently a new fish meat/bone separator has been developed and tested at the Technological Laboratories of the Bureau of Commercial Fisheries, Gloucester, Mass. The unit removes flesh by squeezing and tearing it from the bone and skin (14). Recovered flesh is in comminuted form, therefore it can be used for preparing three forms of compounded fishery products: fish cakes, canned fish, and frankfurters. Other possible outlets for the fish flesh: fresh fish, sausage, croquettes, fish loaf and jellied roll. Additional uses suggested for recovered fish flesh are fish protein concentrate with high-protein, low-mineral content; a wholesome protein additive or substitute in low-cost protein foods for various feeding programs, e.g. school lunches. However, further work is necessary to determine the properties of the recovered meats and to improve their storage stability.

The Research Institute of Fishery Technology, a well equipped facility in Jakarta is doing research on human food from trash fish: fish cakes, fish sauces, fish balls (3). Their technique involves deboning which is not generally used for trash fish. The ultimate markets for these products is import to Japan and as a convenience food in big cities. Small scale marketing studies are beginning. The majority of fish are caught in east Java and the population center is in west Java; hence, because of transportation costs, it is more profitable to import these products to Japan than for use in Indonesian cities. Use of trash fish based human food products in rural areas would also be difficult because of transportation problems.

G. Chitosan (15)

Chitosan, a byproduct derived from the shells of crustacean animals, and useful as a chemical agent for treatment of food processing wastes, is especially effective for coagulation of suspended solids in such wastes, and the waste-activated sludge from biological treatment of processing wastes. Because of the interest in recovering some feed and economic value from the activated sludge which results from biological treatment of wastewater, recent efforts have focused on use of this high-protein material in fish, poultry, and animal feeds.

A process developed and patented for commercial manufacture of chitosan from shrimp and crab shells involves decalcification in a mineral acid, removal of protein with dilute alkali, and deacetylation of chitin to produce chitosan, a glucosamine polymer of high molecular weight. The substance effectively coagulated suspended solids in processing wastes from meat packing and processing, poultry, sea food, vegetable, cheese, and egg-breaking plants. Protein content of coagulated by-products recovered from these wastes by treatment with chitosan ranged from 30-70%. Feeding trials with small animals are in progress to further evaluate the feed value in these coagulated byproducts.

IV. AIChE - AID/LIFE Site Visits

Examples of fish processing operations and waste utilization in areas uncovered as part of the AIChE - AID/LIFE project are described below.

A. Ceylon Fisheries Corporation, Sri Lanka (7)

Ceylon Fisheries is a government-owned company with two processing plants. The one visited in the Colombo harbor area was built in 1961 with Canadian aid, and produces frozen fish cuts. There are two tuna boats with freezing facilities which can go out for 80 days and as much as 2000 miles, and five trawlers which can go 300-400 miles. These were bought with government financing and some Canadian aid; the ones in port appeared to be in poor repair.

Sri Lanka obtains a good share of its animal protein from the sea, the per capita consumption being 120 lb/yr of dried, canned, and fresh seafood. Ceylon Fisheries has a total catch of 4000-5000 ton/yr, but the imposition of 200-mile limits by India and Malaysia has seriously reduced its fishing area and is causing a 900-ton shortfall. The principal catch is yellow-fin tuna, which is taken mainly by net but also with long lines. This and other fish for export are frozen.

Heads, tails, guts, and shells are processed into fish meal by grinding, pressure cooking, and vacuum evaporating with steam to 10% moisture. The material is 45-60% protein and 3% or less salt, and comprises a quarter of the total catch. It is fed to poultry and swine, but not to cattle.

Stickwater is vacuum evaporated and added to fish meal at this plant, but wasted at the other one. Shark liver oil is sold locally as a source of vitamins A and D.

B. Tema Food Complex Corporation, Tema, Ghana (7)

Tema is a relatively new planned city created by Kwame Nkrumah

within commuting distance of Accra. It is a major industrial center and port, with a mixture of public and private firms. The Tema Food Complex Corporation, which is government owned, appears to be the largest food processor in Ghana. It has flour, oil, and feed mills and a fish cannery with fish meal production.

The fish cannery produces canned sardines and a meal from any wastes. The blood water, however, goes back to sea. It has a 70 ton/day capacity when processing wet anchovies from offshore. They supplement the local catch with imported smoked anchovies at 25 cedi/30 kg ($0.33/lb). The complex has a fish smoking operation and a Frigoscandia cold storage unit with a 5000 ton capacity. The capacities quoted above are probably name-plate values. The feed and oil mills are operating at about 40% of capacity due to limitations of raw materials, supplies, and import restrictions.

C. Mankoadze Fisheries, Ltd., Tema, Ghana (7)

The Mankoadze Fisheries, Ltd., located adjacent to a dock for large fishing vessels, is privately owned. Tuna is canned for Starkist now in a 50-50 partnership in place of depleted herring and mackerel. Before running out of local fish, a fish meal plant was imported from Norway to process waste. It now stands idle, as it is more profitable to sell tuna discards directly to consumers. Trigger fish, an abundant but unfished local species, is now being considered as fish for meal production. Because it has no scale, it does not sell locally. Since it has the same feeding habits as the overfished herring,

its utilization may lower pressure on the more desirable species. Its a rather interesting fish for processing the meal, by comparison with menhaden processing in the U.S., since the stickwater can be dried and placed back with the meal. Anti-oxidants, naturally present in the stickwater and returned to the meal, prevent rancidity and eliminate the need for antioxidant additives. The absence of scale simplifies processing.

Mankoadze still deals in frozen whole fish. The fish are caught often as far away as Angola, frozen on board, and sold in cartons to distributors from cold storage. It is one of three Ghanaian companies in this business.

D. Pesca, Peru (6)

Fish processing in the United States has some problems with pollution, particularly the waste waters from pressing and grinding operations. In Peru this "stick water" is concentrated via ultrafiltration or evaporation and is added back to the fish cake prior to drying. Waste or trash fish is, by law, processed into fish meal, though there was no indication whether this meal was mixed with the anchovy meal which Peru is famous for. Pesca Peru is currently developing a product for human consumption which is a concentrate of the press water. It resembles, in color and odor, beef extract and it is hoped that it will have similar use.

Fish oil finds many uses in Peru. Perhaps too many. The taste of fish is in almost everything. Cooking and salad oils contain upward of 10% fish oil, mayonnaise contains some fish

oil, and chickens are fed a diet rich in fish meal, resulting in "fishy" tasting poultry and eggs.

Anchovy meal brings a high price on the world market. At 65% protein the current price is $410 per metric ton. Fish oil is also further processed (hydrogenation and fractionation) and sold to the chemical industry. In general, the AIChE team was told that the fish processing industry produces very little waste that is not recycled in some way.

E. South East Asia (3,4)

In S.E. Asia solid fish wastes are utilized in the form of fish meal, duck feed, fish sauce and paste and as a fertilizer. In India the utilization is only partial. Due to the scattered nature of the processing units, accurate figures of the quantum of residues are also not available. According to a rough estimate, the annual residue availability is as (in tonnes): prawn shell and head waste 40,000; lobster wastes 800; fish wastes (tuna, seer, mackerel, sardine, pomfret) 3,000; frog wastes 5,000; shark liver residues 2,000; and squilla 100,000 (6).

In Thailand, the trash fish catch is very high due to small mesh of the nets and also due to close-to-shore fishing. Trash fish are converted into fish meal along with the canning wastes generated by two modern and innumerable small canning plants. Trash fish are also fed directly to ducks. Shark is processed for shark liver oil. It is claimed that the fishery industry does not generate any residues which are not utilized. The treatment given to liquid effluents of fish canning plants or mode of their disposal could not be ascertained. Out of an

annual catch of 1.5 million tons, 88,221 tons was exported in 1974. The trash fish catch during this year was 0.69 million tons (6).

In Malaysia and Singapore the fish catch is relatively small. The Indian fish catch is about 1.4 million tons. Fish trash, scrap and other wastes are converted into fish meal and fish manure. Fish oils are extracted from sardines and shark liver. Shark skin is converted into leather. The processing centres are scattered and all the residues are not utilized (6).

In Indonesia the annual catch in 1973 was 1.3 million tons and the exports 52,178 tons consisted of frozen shrimp, frozen frog legs, other frozen fish and salted jelly fish. Indonesia also imports large quantities of canned fish to meet the domestic demand (6).

From 50,000 to 80,000 metric tons of trash fish (too small for human consumption) are thrown back into the sea. These could be used for fish silage or converted into animal feed, an area in which Tropical Products Institute in London is doing research. Dr. Stanton at the University of Malaysia is also studying low salt fermentation for conserving trash fish.

In Sri Lanka, the Co-operative wholesale establishment (Colombo) is making a concentrate out of dry fish waste, and converting trash fish (cubies) to powder.

In the Philippines, the total fish catch is about 1.5 million tons. Of the edible fish, 60 percent is consumed fresh and 40 percent is processed. The trash fish converted is around 10-12 percent which is wholly converted into fish sauce and fish

paste by fermentation with salt. Fish meal production is still developing. It uses sharks and seasonal excess catches. Shark is also processed for liver oil and the residue converted into fish flour which is exported. Shrimp and fish cracker has a small market, and fish protein concentrate is at the research stage. Fresh fish is ground as feed for cultured carnivores such as eels, catfish, crabs, and shrimp. Shellfish shells have potential use in the duck industry. Some of the sea shells are heated in lime kilns to obtain quick lime, converted into jewelry or other articles, or exported.

In the Philippines, waste materials rejected from the frozen seafood industry constitutes 80% and 35% of the live crab and shrimp weights respectively. These wastes include the shell, the thin claws which still contain meat, and the shrimp heads. Shrimp heads and thin claws are generally given away to the factory workers, and the shells are thrown in garbage dumping areas far from the cities. There have been some unpublished studies on the utilization of shrimp head extracts into a ready to use concentrate or sauce condiment for flavoring of some traditional recipes.

Waste from the frozen fish fillet industry consists mainly of entrails, gills, fish skin, fins, etc. They are converted into fish paste (bagoong) and fish sauce (patis). These products are generally prepared by salting the fish materials (3 parts fish: 1 part salt) and allowing the thoroughly mixed materials to ferment in cemented vats for 3 to 6 months.

Leonor Santos, College of Fisheries, University of

Philippines, Diliman, has conducted studies on the utilization of fish offals into fish meal and silage. Other studies are being conducted by the Inland Fisheries Project, and the Bureau of Fisheries and Aquatic Resources.

V. Summary and Conclusions

The fishery industries have a unique residue pattern which does not conform with that of other agro-industries. The most pressing problem is the loss or wastage of high quality animal protein which results from ineffective utilization of what is harvested. The solution to this problem, which is particularly apparent in tropical developing countries, lies in a long and slow development effort to make more and better fish available for direct human consumption. At the same time catches not suitable for, or surplus to, human requirements should be processed to high quality animal feedstuffs (2).

A most important step which can be taken to improve production from traditional fisheries is to reduce post-harvest wastage which can be ascribed to a variety of causes. Wastage includes edible fish which are caught but discarded at sea either because they are unacceptable to the local market or unprofitable to store on board and bring ashore. Shrimp fisheries, using bottom trawls which are an unselective gear, may catch from four to twenty times as much fish as shrimp and in most cases the majority of this is discarded. Over 5 million tonnes is estimated to be wasted each year in this way. A number of economic studies have been done in the Gulf of Mexico and

elsewhere but at best they show marginal profitability from landing these by-catches under the existing price structure and demand for fish and shrimp. In other areas such as Indonesia, foreign joint venture partners are required by law to land a proportion of the fish they catch (1).

Apart from under-utilization, in the sense that fish suitable for human consumption are made into animal feed, there are also high post-harvest losses of fish which spoil under the severe tropical conditions. The area where the most significant improvements could be made is the period from catching to landing. Although proper chilling would save considerable quantities of fish, all too often the infrastructure, e.g. ice making machinery, insulated and refrigerated storage, is not available. There are other losses at fish processing plants. These losses, however, are not as significant since the large processors recover most of their waste and the environmental impact from smaller processors is minor.

Fish meal production is at present the primary use of fish waste and trash fish. The high prices being offered for fish meal are creating a major problem in that fish meal producers often compete for and process species of fish which would normally be used for human consumption.

It has been recommended (1) that fish meal and industrial fish products should only be made from fish which is not otherwise caught or suitable for human consumption and from offal or trimmings from plant wastes. Fishing species which have direct consumption acceptance should be unacceptable since

protein requirements for live-stock can be provided by other means.

Apart from the well advanced fish meal technology which is available, the most promising avenue for animal feed production would appear to be the ensilage of waste and surplus fish. Although a considerable amount of work is underway, a greater development effort is needed. The major requirement is for intensive feeding trials under tropical conditions to establish the economics and safety (2).

Low-cost products can also be made by machinery which has been developed for separating fish meat from skin and bone. This method is particularly applicable to utilization of mixed species from the by-catch. As a raw material this separated fish can be used for sophisticated, blended and extruded products for developed countries. There are also opportunities for producing very low-cost products for low income consumers by mixing with salt or blending with cereal and frying (2).

Developments in the technologies of FPC production for human feeding and fish hydrolysates as milk replacers should not be overlooked. However, these technologies are likely to be considerably more complex and capital intensive than those mentioned above. In addition they are unlikely to be applicable at a village level.

Considerable reduction of losses could be achieved in all areas of the world. However, this demands a willingness to change traditional practices and the transfer of appropriate technology. To date the lack of motivation and interest has

hindered more effective utilization. In addition it is difficult to change entrenched social customs and established food habits. The priority area for attention is the increased use of marine resources as human food. Introduction of new technology, leading to reduced losses, will contribute to this aim (2).

It is the conclusion from the second AIChE site visit (6) that there be no USAID involvement in any projects dealing with reclamation of nutritional products from fish meal processing wastes. The industry is concentrated in only a few seacoast countries and wherever the industry is of appreciable size, they are controlling their wastes.

FISH
REFERENCES

1. Allsopp, W.H., International Development Research Centre, Canada, "The Utilization of By-Catch in Shrimp Fisheries".

2. "Residue Utilization - Management of Agricultural and Agro-Industrial Wastes", Report of the UNEP/FAO Seminar on Residue Utilization - Management of Agricultural and Agro-Industrial Wastes, Rome, 18-21 January 1977.

3. Fleischman, M., Steinkraus, K.H., Meade, R., AIChE-AID/LIFE Project Report of First Site Visit, July 27-August 21, 1976.

4. Bhusan, Bharat, "Agricultural Residues and Their Utilization in Some Countries of South and South East Asia", Industry Sector Seminars, Management of Agricultural and Agro-Industria Wastes, UNEP/FAO, Rome 18-21 January 1977.

5. Buflovak Div., Buffalo, NY, "Evaporator Reclaims $$$ From Tuna Stickwater", Food Engineering, April 1976, p. 134.

6. Barnett, Stanley; Nystrom, John; Dunlap, Charles; Trip Report, AIChE-AID/LIFE Survey, Team II, Oct. 23-Nov. 17, 1976.

7. Barnett, S.M., Reilly, P.J., Schopmeyer, H.H., "Trip Report", AIChE-AID/LIFE Survey, Team II, January 3-29, 1977.

8. Jap. Patent 33142175, Fish Protein Recovery, Nippon Junyaku Co., Ltd.

9. Herborgh, L., Johnson, S., Ministry of Fisheries, Denmark, "Fish Cheese".

10. Disney, J.G., Hoffman, A., "A Dried Fish Silage Product", Proceedings of the Torry Research Station Symposium on Fish Silage, Aberdeen 1976.

11. W.R. Stanton, Univ. of Malaya, Malaysia, and Q.L. Yeoh, Malaysian Agricultural Research and Development Institute, Malaysia, "Low Salt Fermentation Method for Conserving Trash Fish Waste Under South East Asian Conditions".

12. Tropical Products Institute, Fish and Meat Section, 56-62 Gray's Inn Road, London, WC1X8LU/

13. G.O. Bucove, G.M. Pigott, Institute for Food Science and Technology, College of Fisheries, Univ. of Washington, Seattle, Washington 98195, "Pilot Plant Production of a Functional Protein From Fish Waste by Enzymatic Digestion".

FISH
REFERENCES (continued)

14. Carver, J.H., King, F.J., "Fish Scrap Offers High Quality Protein", Food Engineering, January 1971, p. 75-6.

15. "Use Waste By-Product To Recover Solids From Processing Wastes", Food Processing, June 1975, p. 27.

16. D. James, W. Krone, Department of Fisheries, FAO, Rome, "Development in Fish Utilization".

PALM OIL

The oil palm fruit grows in large bunches which contain from 200 to 2000 individual fruits. The bunches vary in size depending upon the age and variety of the trees as well as upon growing conditions. Color of the ripe fruit varies in different strains from yellow to orange to nearly black. The fruits ripen in about six months, so that two crops per year are obtained.

The fruit contains three main parts

(1) Pericarp - outer fleshy pulp

(2) Shell

(3) Kernel

Thus it is a drupe and resembles fruits like peaches and plums, except that the fleshy part contains a high % of oil instead of sugar, and has fibres running through it. Also, the kernel and shell occupy a larger proportion of the volume of the whole fruit (1).

The structure of the palm fruit is shown in figure 1 and the composition of the fruit is given in figure 2. Compositions of palm fruits from various regions is given in Table 1

Figure 1

PALM FRUIT (2)

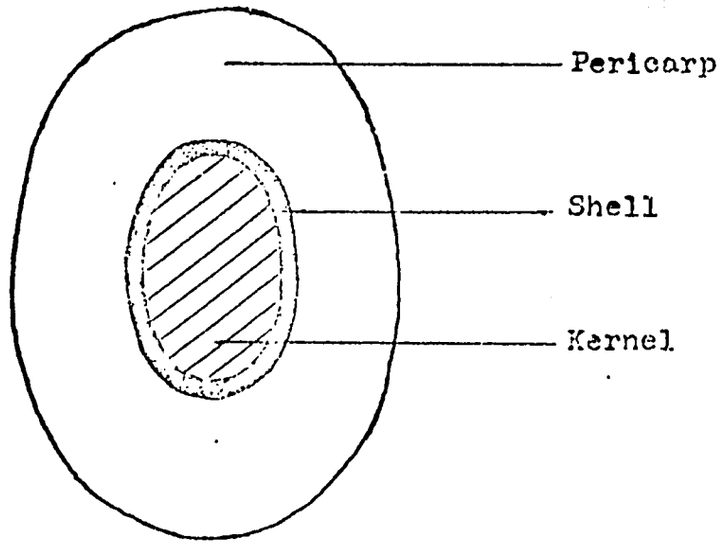

Figure 2

PALM FRUIT COMPOSITION (3)

Palm fruit is almost 63% of the fresh fruit bunches (ffb).

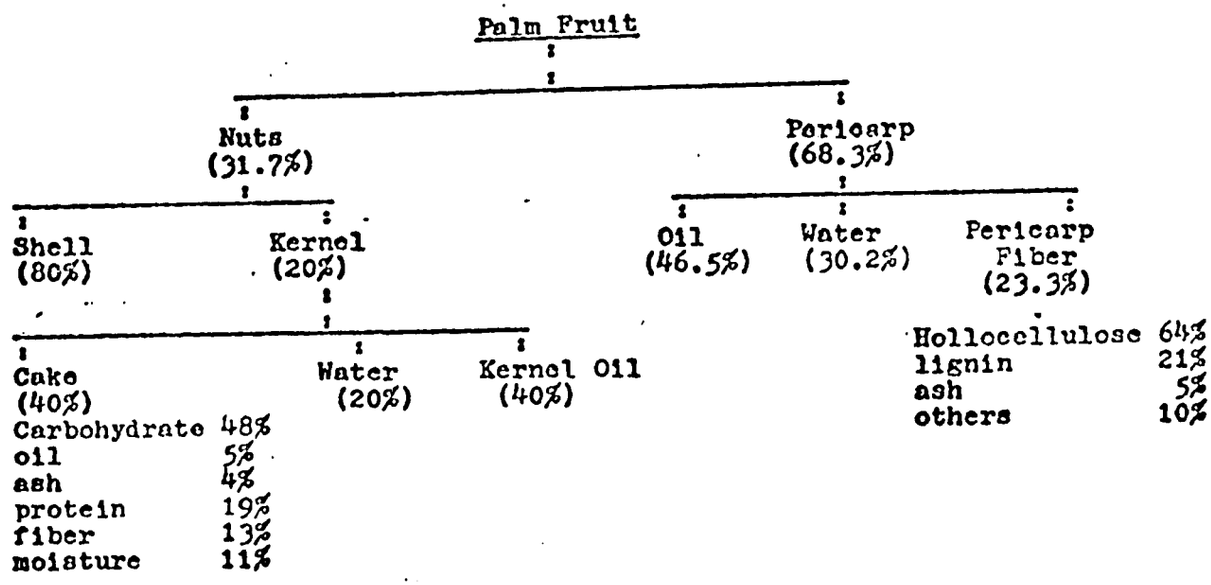

Table 1

Composition of Palm Fruit from Different Regions (1)

	Java	Sumatra	Malaysia
% Pericarp to whole fruit	49.6-62.9	48.4-62.1	39.8-62.6
% Shell to whole fruit	32.7-42.6	32.8-43.8	26.4-49.3
% Kernel to whole fruit	7.8-12.5	7.0-12.6	5.2-12.0
% Oil in pericarp	37.3-57	36.7-52.9	21.3-50.7
% Oil in kernel	37.8-52.7	38.7-52.4	28.6-51.9

World palm oil production in 1976 was 3.2 million tons, nearly double the production of 1970 (4). The countries which produce palm fruit and oil are (4, 5):

(1) Peninsular Malaysia - 44% of the total world production

(2) Indonesia

(3) Zaire

(4) Ivory Coast

(5) Sabah

(6) Nigeria

(7) Cameroon

(8) Thailand

A forecast for 1976 placed palm oil in importance as a food oil source second to soybean oil at a projected level of 15% of the world supplies (6).

Palm fruit is mainly grown to extract crude palm oil which is used for cooking and other purposes. Crude palm oil contains vitamin A. Malaysia is the world's largest palm oil producing country with Indonesia

being second. Refined palm oil is used in the manufacture of various products (3, 6):

Margarine

Compound Cooking Fat

Soap

Commercial Baking

Biscuits

Frying Fats, Ice Cream Fats

Other Edible Products

Next to rubber, palm oil is Malaysia's largest export. Malaysia's production was 10^6 metric tons/year of palm oil as of January 1977. The Malaysian palm oil industry is very well developed. Indonesia, which is next to Malaysia in production, does not have as well developed an industry. It is expected that 518,000 tons will be produced in Indonesia in 1978. As of July 1974 there were 70 mills in Peninsular Malaysia and 9 mills in East Malaysia of varying capacities (7). Malaysia exported 1.41 million tons of palm oil (including stocks from 1975) in 1976 which is approximately 70% of the world's exports of palm oil (4).

I. PALM OIL PROCESSING

Figure 2 shows that the palm oil is in the pericarp of the fruit and is 32% (wt.) of the total fruit and 47% (wt.) of the pericarp. Pericarp itself is about 68.3% (wt.) of the total fruit. The palm kernel oil, a minor product, is about 3% (wt.) of the total fruit. The pericarp also contains a relatively high proportion of carotene, an orange pigment precursor of vitamin A, which is used for natural food coloring (1).

There are various processes for obtaining the palm oil from the fruit. However, all processes have the same basic features in common. The oil is obtained from the pericarp by expression using various techniques as described below.

Extraction of Palm Oil in Nigeria (1)

A flow diagram of the Nigerian Products Co., Ltd. process is shown in figure 3. "About 3000 lbs. of palm fruit are charged into an agitated steam pressure digester. After one half hour steaming, the charge is transferred to a centrifuge. During the 10 minutes centrifugation time, steam is admitted to facilitate the separation and expulsion of the oil through the perforations in the centrifuge basket. The oil from the centrifuge goes to a settling tank and the settled oil to storage tanks."

"The material remaining in the centrifuge goes to a rotary drier. After 20 minutes the dried fiber and nuts go to a rotary screen to separate the nuts, which then go to a nutcracker. The cracked nuts fall into a salt solution, the gravity of which is adjusted so that the shell fragments sink and the kernels float. The separated shells and kernels are centrifuged to remove the brine, and the fiber and shells are burned under the boilers. The kernels are dried and bagged for export. A plant with three full-sized centrifugals can handle 20 or more tons of palm fruit a day. Most of the operations of this process are automatic. When sound fruits are used, the oil contains but little free fatty acid, usually well under 5% and sometimes only about 2%. This process gives a high yield of oil."

"Some of the "central" mills or factories employ a combination of centrifuges and hydraulic presses for extraction of palm oil, but the yield of oil does not appear to be any larger than that by the process of the

Figure 3

Extraction of Palm Oil in Nigeria (1)

(Process of The Nigerian Products Co., Ltd.)

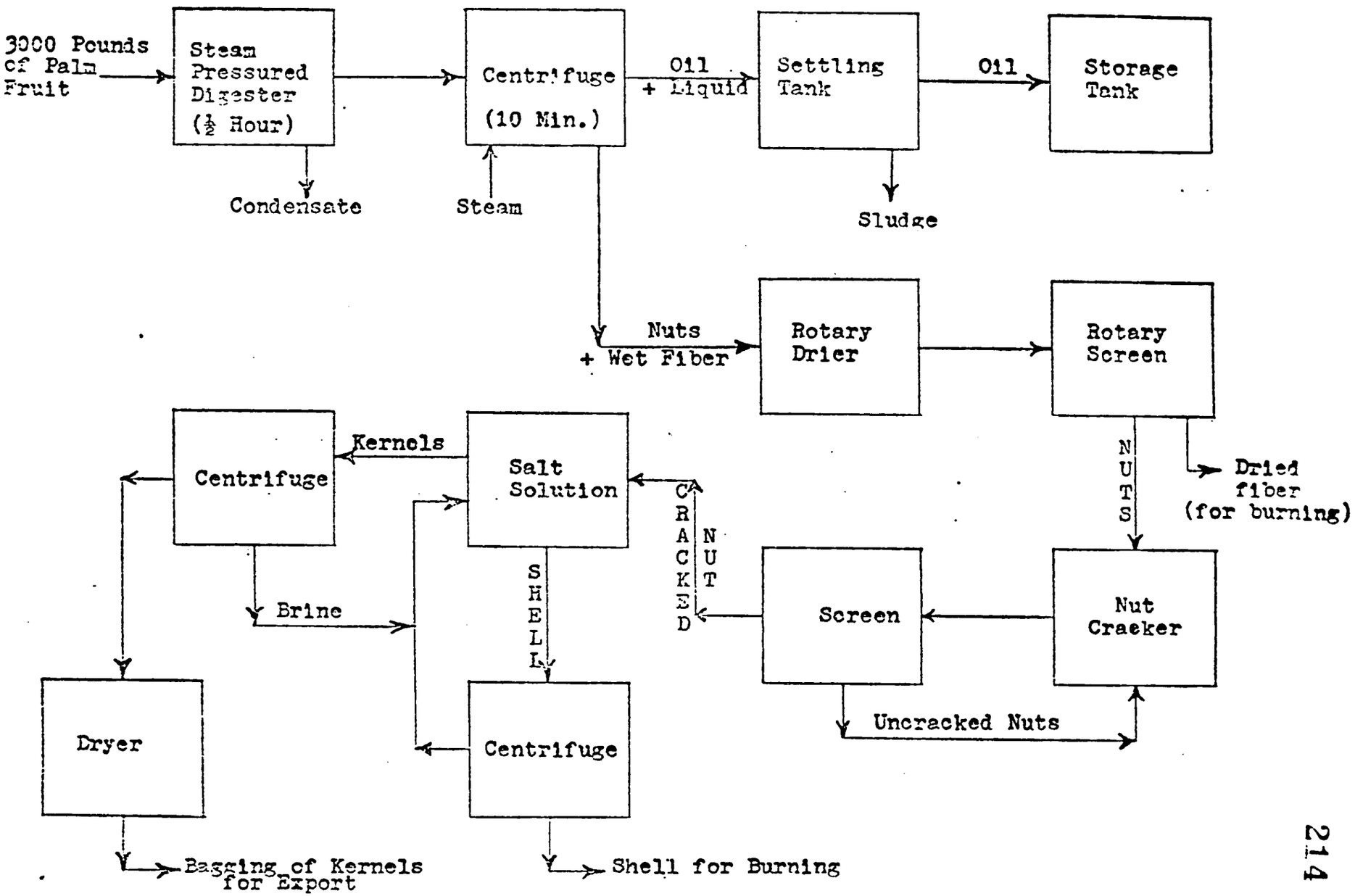

Nigerian Products Co. The separation of the pulp by various "depericarpers", as practiced at some plants prior to the extraction of the oil, is apparently not so satisfactory as when the nuts are not separated, particularly with the centrifugal process."

Two waste streams are generated in this process; condensate from the steam pressured digester and sludge from the settling tank. A description of the waste treatment is not available.

Palm Oil Production in the Ivory Coast (9)

A flow chart of a process in Ivory Coast is given in figure 4. The FFB (fresh fruit bunches) are first put into the autoclave where they are treated with steam and then passed on to the de-raffler where the fruits are separated from their stems. These stems are dried and burned in the fields. The fruits are then separated from the water and other solubles in the separator. The fruit which contains the pericarp then goes to an intermediate storage tank from where it is fed to the roller mills. Oil and water are separated from the whole fruit by the squeezing action of the roller mills and pods and fibers are also released. This mixture of oil and water is then fed to the centrifuge, where the oil is separated from the water and dirt like sand. Oil is decanted to separate it from any contaminated water which was carried over. This decanted water is mixed with the water from the centrifuge. The oil from the decanter then goes to the dehumidifier where it is heated to evaporate any residual moisture. The final product is the polished oil.

Pods and fibers which are separated from the oil and water in the roller mill are fed to the air separator. Here fibers are separated from the seed or the pods. The pods then go to the separator where the endo-

Figure 4

Palm Oil Production in Ivory Coast (8)

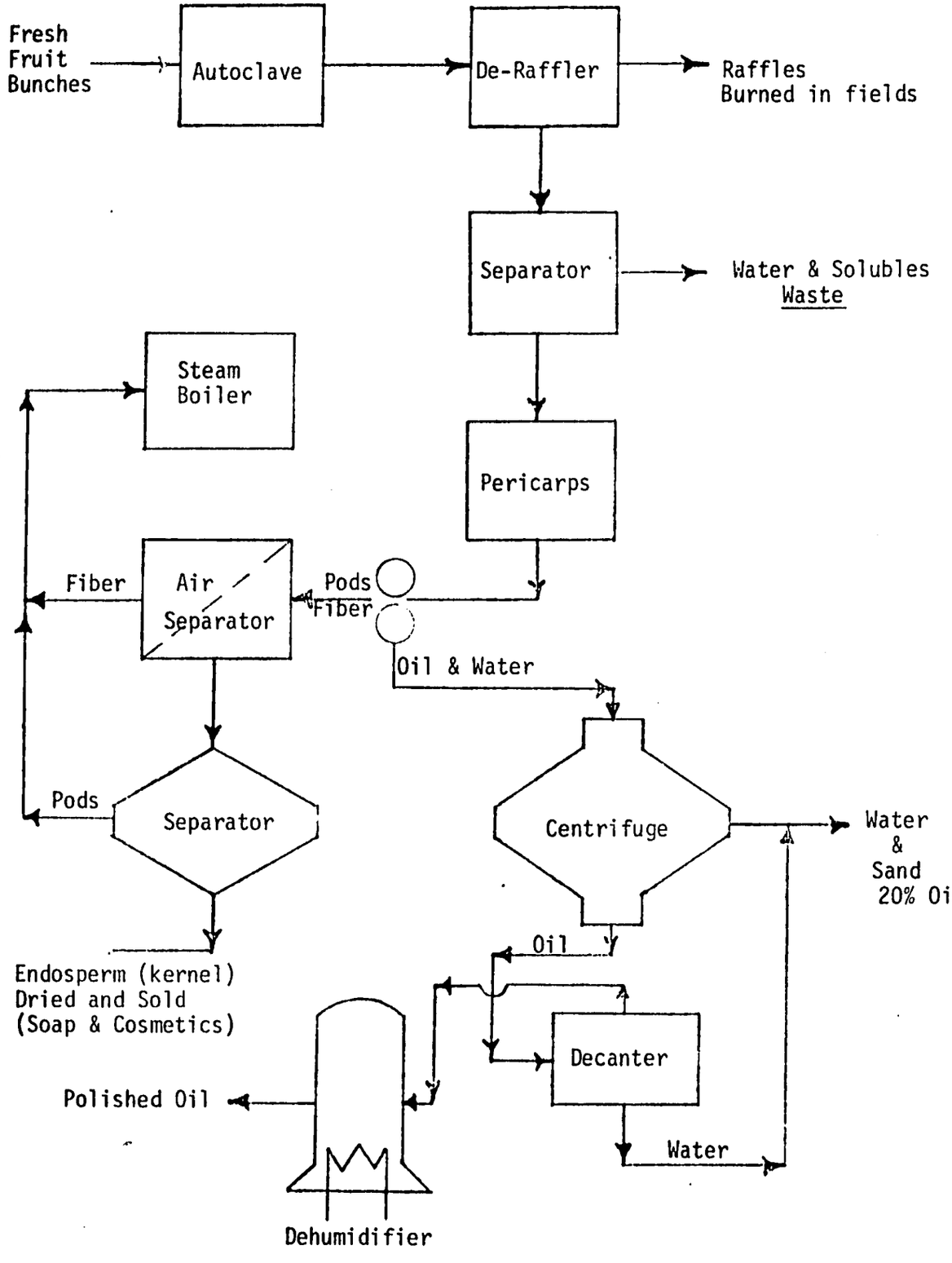

sperm or the kernel is separated from its shell. The shell is then mixed with the fiber to be used as fuel in the steam generator or boiler. The kernel is further dried and sold to the soap or the cosmetics industry.

The following residues are generated in this process:

- Water and water solubles rejected from the separator which follows the deraffler
- Condensate from the autoclave
- Dirt and water from the centrifuge, the water containing about 20% oil.

The oil-containing waste water stream usually flows into a local stream or river. The site visit team reports that in one case, at least, and possibly in all cases, this waste stream serves as a feed stream for a village-type oil recovery process practiced by local villagers.

Palm Oil Recovery in Ghana

The third site visit team for the AIChE AID/LIFE project visited the Kwamoso Oil Palm Plantation of the Ghana State Farms Corporation.

Both the oil palm orchard and the factory for recovering the oil are government projects. At this location about 500 acres of palm trees are actively bearing, while another 1000 acres have been planted and will start bearing in a couple of years. The state has set out 10,000 acres of palm nut trees in another location which should also be bearing in a few years. Ordinarily, the trees start bearing when they are five years old and continue for 25-30 years or even more. The yield of oil under best conditions of growth and of oil recovery is between 3,000 and 4,000 lb/acre. There was no indication of the disease problem found by the second team in the Ivory Coast.

The oil palm processing unit was fascinating, since it represented a native type process in comparison to the sophisticated process seen by the second team in the Ivory Coast. The procedure for recovery of the oil is as follows:

The fruit is harvested by hand and left overnight for ripening so that the berries drop out when beaten with sticks. The berries are placed in drums and boiled for 1.5 hr to soften the fiber, using wood and some waste fiber as fuel. (In some plants the berries are steamed to soften them, as this takes somewhat less time than does boiling).

The softened fruit is placed in steel baskets about 1.5 ft in diameter and 2 ft high with 1/4 inch perforations on the side and submitted to about 20 psi hydraulic pressure. In order to get more oil, the pressure is released, the hydraulic head lifted, and a quart of hot water added to the mass and pressure applied again with additional oil being recovered.

During this operation the nuts in the cake are left intact. In order to recover the oil in the nut, the press cake is thrown on a table and the hard kernels picked out by hand. As the expeller operated, considerable oil was left in the fleshy cake, for squeezing by hand would release additional oil. The nuts which were separated by hand are processed in a series of steps as follows:

1. The fiber around the nuts is removed in a horizontal hand-operated beater equipped with paddles and a screen along the bottom.
2. The kernels are then cracked and the meat removed by flotation using a clay slurry for buoyancy. Salt could also be used but it is considerably more costly than clay.
3. The kernels are washed free of clay and sent to another plant where the oil is expelled. The cake from expelling is used for pig feed.

The red oil will set to a solid on cooling. It is placed in a tank heated with a small wood fire and barreled for shipment. The pressed pericarp fiber is thrown aside, as are fiber and shells from the kernels. The stems from which the berries were removed are burned under the barrels to help soften the fruit. The ashes from this operation are collected and leached with water to remove potash. (They claim the ash is 4% potash). The alkali is concentrated and will

be used to recover more oil from the cake after pressing the pericarp.

It is obvious that the plant is extremely inefficient, with less than 50% of the oil in the pericarp being recovered. The superintendent stated that he would like a screw press for producing kernel oil, but to date was unable to get authorization to purchase one. Despite this inefficiency, there was no oily effluent leaving the plant as was seen on the Ivory Coast, perhaps because the red oil did not undergo a dewatering step.

Process of Extraction of Malaysian Palm Oil (3)

Figure 5 shows a typical Malaysian palm oil process. The same method is basically used in Indonesia. "The extraction of palm oil from fruit bunches in Malaysia is by a semi-continuous process. Four stages of processing can be distinguished: sterilisation, bunch stripping, oil extraction, and oil clarification and purification.

The first stage is sterilisation in which fruit bunches are subjected to live steam under a pressure of 35-45 lb/in^2 for 50-75 minutes. The purpose of sterilisation is to deactivate the enzymes responsible for the breakdown of oil into free fatty acids, to loosen fruit from bunches and to coagulate mucilage so that oil can be recovered later in the process without recourse to conditions which would oxidise the oil.

Great care is taken during sterilisation to exclude air which inter-

Figure 5

Palm Oil Production in Malaysia (3, 10)

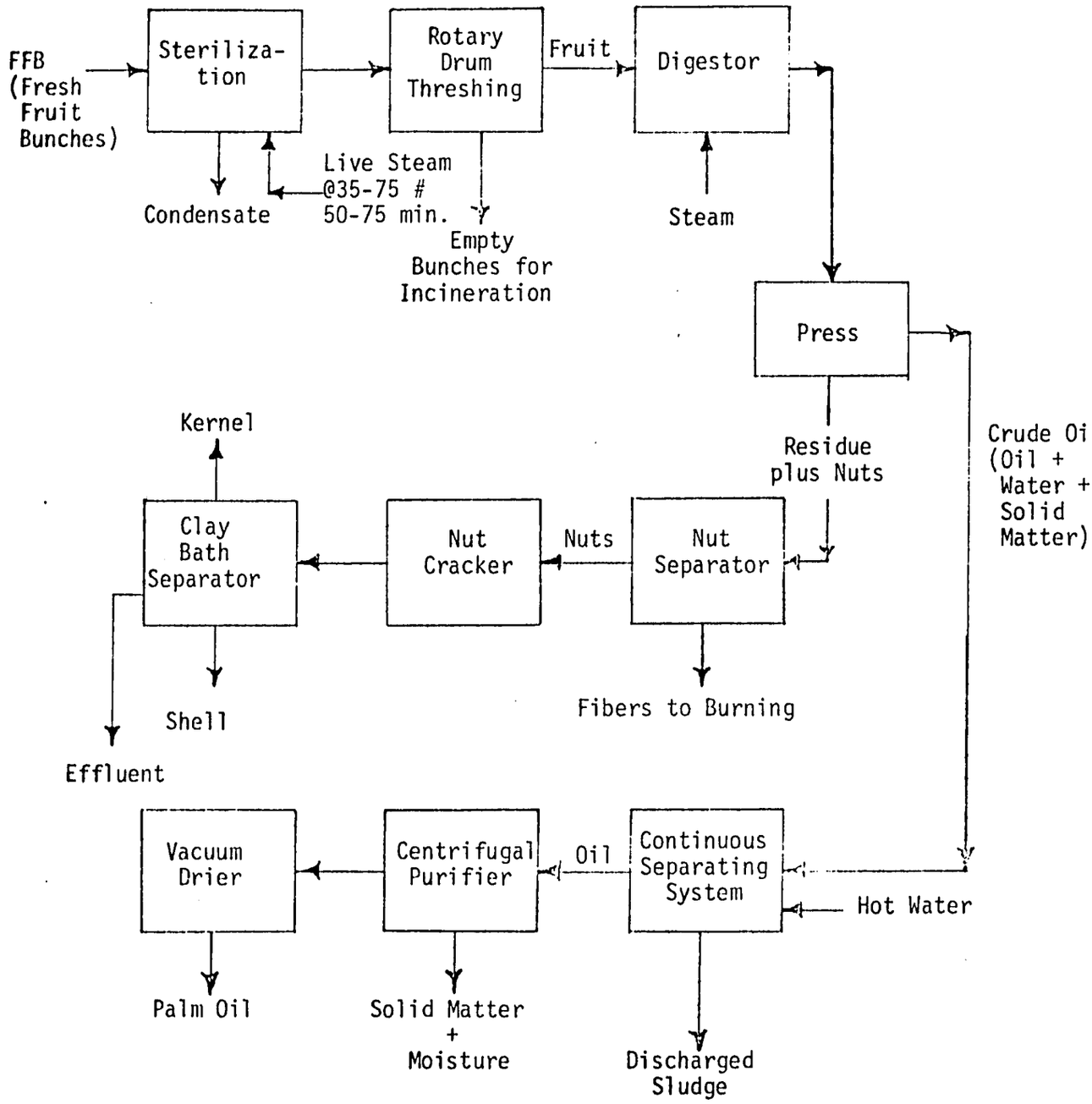

feres with sterilisation efficiency and may cause oxidation of the oil.

In the second stage of processing, sterilised bunches are fed continuously into a rotary-drum threshing or stripping machine which strips and separates fruit from bunches. Fruit passes through channel bars running longitudinally along the drum while empty bunches are eventually discharged at the end of the drum for incineration.

After stripping, fruit is fed continuously into a digester where it is stirred by a series of rotating arms. Digestion converts fruit to a homogeneous oily mash suitable for pressing. The digested mash is then fed into a press for extraction of crude oil under pressure which is applied either hydraulically or by means of a worm-screw.

The crude oil at this stage consists of a mixture of oil, water and some fine solid material. This mixture is passed to a continuous separating system, from which the oil-rich layer is fed to a centrifugal purifier to remove solid matter and some moisture. Finally, the oil is dried to a moisture content of 0.1%; vacuum driers are preferred since they allow oil to be dried at lower temperatures in the absence of air, thus reducing the risk of oxidation. Such care to avoid oxidation is exercised throughout the process."

Fibrous residue and nuts released in this process go to a nut separator where the fibers are removed. The recovered fibers are used for fuel in the steam boilers and sent to the clay bath separator where the shells and the kernels are separated by density difference. Kernels are further processed for oil extraction or dried and exported. The shells go to the furnaces for burning.

The following residues are produced:

- sterilizer condensate

- sludge from the continuous separating system
- effluent from the clay bath separator.

Sludge, an emulsion, which is a considerably stronger wastewater than condensate, arises from the waterwashing in centrifuges of the crude oil from suspended fibers, cell debris and entrained oil. Sludge is of environmental concern in Malaysia and an effluent analysis is shown later.

Palm Kernel Oil: The process for obtaining palm kernel oil is identical with that for coconut oil from copra. The kernel or the meat from the nut is either pressed to extract oil out or the oil is recovered by solvent extraction (11) using food grade hexane. The major portion of the kernels are exported to the U.S.A. or Europe. The by product of this process is the kernel meal which is used for animal feed.

Palm Oil Refining: For edible purposes, palm oil is refined to remove free fatty acids, pigments, volatiles, and other impurities. The dark orange color of crude palm oil is almost entirely due to the presence of carotenoids, at the levels of 500 to 700 ppm. As reported by Pritchard (6), there are four processes for the palm oil refining:

(1) Batch refining.

(2) Classical continuous centrifugal neutralisation processes such as the Sharples Low Loss and Alfa Laval Short Mix processes.

(3) The Zenith semi-continuous neutralisation and bleaching process.

(4) Steam refining process.

Only some features of these will be described.

The first three methods involve neutralization for removal of free fatty acids, by caustic. Caustic refining produces a soap stock which can be used for manufacture of soap. Caustic refining followed by acidulation produces an acid oil byproduct which is used for manufacture of fatty acids.

In Malaysia, there is excess soap stock which now causes only a slight water pollution problem. Losses of oil in soap stock can be high.

Bleaching is done either by adsorption with diatamaceous earth or thermally. Loss of oil during earth bleachings usually is high and the carotene, a vitamin A pre-cursor, is not recovered. Heating of palm oil at temperatures above 180°C causes thermal destruction of the carotene into almost colourless products. If the reaction is taken to completion, over 98% of the total carotene present is destroyed and oils of good quality will result. Again, carotene is wasted. Deodorization for removal of hydrocarbons and carbonyl compounds is done by steam stripping.

Use of steam refining or steam distillation which simultaneously accomplishes both neutralization and deodorization, is increasing. Prior to distillation, it is usual to degum, earth bleach, and filter the oil. Some liquid effluent and a still residue are the only wastes produced in steam refining and these are not considered to be environmental problems.

II. GENERATION OF RESIDUES & WASTES

The world production of palm oil was 3.2 million tons in 1976, Malaysia contributing 1.4 million tons (4). This large volume of production also leads to huge amounts of wastes and by-products. For oil milling processes previously described, the following are the major residues and wastes:

(1) Raffles

(2) Steriliser Condensate

(3) Sludge

(4) Shells and Fibers

(5) Clay Bath or Brine Solution Effluent

Raffles, shells and recovered fibers are not pollutional problems as they are usually used for fuel purposes. Because of this fuel source, palm oil mills are generally fuel self sufficient.

In Malaysia there is much concern over water pollution from rubber and palm oil mills. In Indonesia, though palm oil production is high, there is not much apparent concern over environmental problems. This is partially due to the remote locations of the oil palm mills in Indonesia. Palm oil production is probably not high enough in other countries to have widespread environmental impact. However there is still a detrimental effect on waterways and waste of residues.

In the Ivory Coast (9), the effluent from a palm oil mill contains as much as 20% oil. Some of this is recovered by the natives in crude tribal operations, located where the waste streams flow into the local rivers. A portion of the oil/water mixture is held in drums where the oil water separation takes place and the oil is dehumidified by simple boiling. The natives use the palm oil for soap and cooking.

In Zaire palm oil is an important staple food and the Government wants to assure adequate supplies at prices the people can afford. Appreciable quantities of palm oil are also used to separate the gangue (worthless rock) from copper ore in the flotation process. A recovery in the world demand for copper (Zaire's principal export) would increase the domestic consumption of palm oil (12). Not much information is available about the environmental impact from palm oil.

Oil palm processing in Indonesia is carried out by well established large estates located in Sumatra. Many of them are government owned. Dr. Dardjo (13) reported that Indonesian oil palm production in 1975 was 400,000

tons. He has also given the typical yield of processing 1000 Kg. of fresh fruit bunches (FFB) of oil palm, as shown in table 2.

Table 2

Yield of processing 1000 Kg of FFB (13)

230 Kg.	Empty bunches (stalks)	23%
180 Kg.	Fiber	18%
90 Kg.	Shells	9%
140 Kg.	Sludge	14%
230 Kg.	Purified oil	23%
33 Kg.	Kernel	3.3%

From Table 2 it is estimated that in 1975 total available by-products, in Indonesia, such as shells and sludge could have been as high as 150,000 tons and 243,000 tons respectively. Though this is a large amount of waste, there is not much concern because most of the palm oil mills in Indonesia are located in scarcely populated areas and are well scattered. Therefore most of the effluent is dumped into the waterways. Other wastes like fiber and shells are burned for energy requirements and the ashes are spread over the fields as fertilizer (11). Dr. Dardjo (13) believes that with increasing production of palm oil, a pollution problem may be forthcoming.

Malaysia

Malaysia has a well developed palm oil industry and the government is encouraging the production of palm oil as it generated about 17% of Malaysia's export earnings in 1975, second only to rubber with 25% (14). Over 90% of the increase in Malaysian and Indonesian palm oil production has gone into export since 1970 (15). However, the wastewaters from palm oil mills are difficult to treat and are largely dumped in rivers and streams. There is much concern in Malaysia over the environmental impact

of these wastes, which are compounded by the concentration of palm oil mills in one area. The problem will get worse due to future anticipated expansion in palm oil production. The Malaysian government and palm oil industry are very concerned over this environmental problem and are working towards both treatment and utilization of these wastes. Work in this area is also being done outside of Malaysia, e.g. Singapore and England.

Results of a recent survey by the Factories and Machinery department of 40 mills all over Malaysia showed that for a total production of 6,793 tons of FFB per day, a total of 1,549,800 gallons of raw water is used per day. This indicates that for every ton of FFB one ton of water is required. It was also found that for every ton of FFB one ton of water is discharged, a little less than half as steriliser condensate and the rest as clarification sludge discharge (7). As will be described later, sterilizer condensate is about 175 kg and sludge about 275 kg per ton of FFB (10).

Currently, Malaysia produces 4.5-5 x 10^6 tons per year of oil palm fresh fruit bunches yielding 1 million tons per year of palm oil. At the rate of 40-50% waste product in the form of sludge and other residues, this represents an effluent of 1.8-2.5 x 10^6 tons/year with a biochemical oxygen demand of 20,000 ppm. This effluent also contains about 110,000 tons of solids. Effluent is normally discharged into the nearest stream with a resultant reduction in the stream's natural fauna and deterioration in water quality for other domestic uses. By 1980, palm oil production in Malaysia is estimated to be 2 x 10^6 tons per year with an accompanying 4.5 x 10^6 tons/year of effluent, including 220,000 tons of solids (10).

Industry claims that they cannot economically meet the recommended standards of 500 mg/1 BOD, 750 mg/1 COD and 750 mg/1 suspended solids. However, the government feels that it cannot wait on the future results of research and

development to solve the problem. The use of whole or partially dewatered sludge as animal feed or for fish ponds is being considered as a stop gap measure until the proper controls are developed. One government official expressed the opinion that even without legal requirements for pollution control, use of palm oil mill wastewaters for animal feed would be profitable. However, because Malaysia is a small country, there may be more waste material available than can be handled or used.

Composition of palm oil mill effluent is given in Table 3. It can be seen from the previous process flow sheets that liquid wastes are principally generated in the sterilizer, oil-water separator, and the clay bath separator or hydrocyclones.

Steam sterilization is essential to restrict the growth of enzymes responsible for breaking down of oil into free fatty acids, to loosen fruit from bunches and to coagulate mucilage so that oil can be recovered later in the process without recourse to conditions which would oxidise the oil (3). Sterilization helps to check the further development of the f.f.a. which must be removed from the oil in the refining process. Dr. Mutharajah of MARDI says that heat treatment in the sterilizer denatures the proteins, making the sludge less desirable as animal feed. It is reported by Olie and Tjeng (10) that about 175 kg of sterilizer condensate effluent are produced per ton of FFB (fresh fruit bunches).

Under high mechanical pressure the oil bearing liquid is squeezed from the pericarp of the palm fruit. This liquid, after dilution with hot water, is separated into pure oil and sludge. To restrict the oil loss to a minimum the sludge is further treated in sludge separators (centrifugals). The sludge, an emulsion, is a considerably stronger wastewater than condensate.

Properties of Typical Effluents from Various Types of Oil Palm Installations (19, 27)

	Palm Oil Mill Sludge	Sludge and Sterliser Condensate*
pH	3.8	4.0
COD (ppm)	97,680	87,466
BOD (ppm)	19,460	26,833
Oil (%)		0.7
Ammonical Nitrogen (ppm)		65
Total Nitrogen (ppm)	715	1,122
Phosphorous (ppm)	162	176
Potassium (ppm)	1,857	2,101
Magnesium (ppm)	250	
Calcium (ppm)	320	
Total solids (%)	6.4	5.4
Suspended Solids (%)	3.0	2.05
Total Sugars (%)		0.12
Starch (%)		0.21

*A factory emits roughly 70% sludge and 30% condensate

Depending on the amount of dilution water, the resultant discharged sludge effluent amounts to 250 kg to 325 kg per ton of FFB (10). The kernels and shells are separated using a suspension of clay in water or brine or in water fed hydrocyclones. The resultant effluent amounts to approximately 140 kg per ton of FFB. Due to its nature the effluent from claybath separators or hydrocyclones can possibly be discharged directly into local sewers together with domestic sewage water from employees' and laborers' houses (10).

III. CURRENT WASTE DISPOSAL PRACTISES AT OIL PALM MILLS

Because of the high BOD, biological oxidation of oil palm mill waste-

waters requires high retention times and hence large land areas. Therefore, oil palm mill effluents in many cases are disposed of in pits or streams without treatment. Skimming and additional centrifugation remove a low quality oil from the wastewaters, and centrifuges have been used in Malaysia to dewater the sludge as follows:

- Unilever Group - 3 plate centrifuges
- Harrison and Crosfield Co. - Sharples - Pennwalt centrifuges
- United Plantations - Alpha de Laval decanter centrifuges

At the Bukit Rajah mill, one of the Federal Land Development Authority's (FELDA) 16 oil palm mills, dissolved air flotation is used to remove suspended solids and oil from the effluent. Chemical oxygen demand (COD) is reduced from 27000 to 5000 ppm and total solids from 5-6% (wt) to 1% (wt). The recovered solids are burned, and the effluent goes to the river. Bukit Rajah has experimented with sedimentation following flotation and found settling to be rapid. Solids were reduced by 50%. Coagulants did not help much. Polyelectrolytes were found to be effective, but expensive. Tests were not made using polyelectrolytes as coagulant aids. This should be considerably less expensive than using them as coagulants. It seems that perhaps a non-conventional coagulant such as chitosan might be effective (16).

The colloidal and thixotropic nature of the sludge, causes a stable, gel forming emulsion which is difficult to settle, filter, coagulate and dry. This difficulty may be due to the suspended flakes of lignin in the sludge (17). Abrasion of centrifuges and filters result from sand in the sludge.

Land disposal of effluent is used by the Guthrie mills (Chemara Research Station). Soil texture is improved by the organic content, but fertilizer value is poor due to the low nitrogen content of the effluent. Drainage is improved because the sludge serves as feed for earthworms. The viscous

nature of the effluent causes some problems in distribution and spreading. There is too much effluent for irrigation of rice paddies, and the pH is too low for this application (16).

Table 4 which shows an assay of the sludge solids, indicates that both fresh and dried sludge should be reasonably good animal feed (18).

Table 4

Biochemical Assay of Dried Palm Oil Mill Sludge (18)

Oil (%)	16.6
Moisture (%)	3.4
Protein (%)	10.2
Fibre (%)	11.4
Fat (%)	1.91
Calcium (%)	0.75
Phosphorous (%)	0.3
Copper (ppm)	25
Manganese (ppm)	80
Zinc (ppm)	60
Magnesium (ppm)	100
Ash (%)	11.3
Sand (%)	1.5

In Malaysia, demand for animal feed is increasing. There are however, shortages of cassava as a carbohydrate source and grass/lucerne meal as a protein supplement. The main problem facing the development of a viable animal production industry in Malaysia is the lack of an adequate local animal feed industry. A recent survey (18) indicates the existence of more than 63 registered animal feed mills in West Malaysia and an annual import of more than 200,000 tons of maize. Maize accounts for about 50% of poultry and pig rations. One of the main aims in utilizing the sludge solids is to substitute part, if not all, of the maize component.

Raw sludge has been attempted for animal feed in Nigeria, but technical data are not available. Pamol Co. in Malaysia (19) has investigated the

possibility of feeding raw untreated sludge to cattle and buffaloes, and the preliminary results are encouraging (20). Pigs, poultry and cattle have been fed raw sludge with satisfactory results in Malaysia (18).

Both raw and dewatered sludge have been used as animal feed, though the high moisture content of raw sludge makes direct feeding difficult. Pigs reportedly do well on raw and digested sludge. However, because of the Muslim population in Malaysia, there are cultural problems in this application. Also there are insufficient pigs in Malaysia to fully use all the available sludge, even on a dry basis. Around 11,000 pigs are required for a 10 ton/hr mill (21). Cattle presumably get diarrhea from raw sludge, due probably to the oil content. For cattle feed, 15% solids is desirable and fiber and other additives to improve digestibility are needed. MARDI (Malaysian Agricultural Research and Development Institute) has had success feeding a mixture of drum dried sludge plus press fiber to sheep (16, 22). Rotary drum or spray drying might be feasible because of excess heat available at oil palm mills. However, Seow Cheow Min of Chemara Station believes steam costs for drying sludge will still be high (21).

IV. CURRENT WASTE TREATMENT AND UTILIZATION RESEARCH AND DEVELOPMENT - OIL PALM MILLS

The Malaysian Agricultural Research Development Institute (MARDI) is doing research on anaerobic digestion of the supernatant which remains after simple settling of oil palm wastewaters. It seems that anaerobic digestion would not be a practical treatment method because of the long times which would be required. MARDI has also expressed interest in evaluating electrolytic air flotation. By addition of microorganisms and production of oxygen by electrolysis, it is hoped to simultaneously accomplish biological oxida-

tion and removal of solids and oil (16).

Dr. John B. Sutanto, Department of Chemical Engineering, University of Malaya is doing research on extracting protein from juices recovered by pressing of empty bunches, chemical pulping processes which utilize the fibrous wastes, and palm shell charcoal activation. An Australian firm, Ecotec Systems Ltd., is reported to have an ion exchange process for extraction of protein from oil palm wastewaters (16).

Dr. W. R. Stanton, University of Malaya, has emphasized that microbial treatment of sludge will break the emulsion, thereby facilitating the separation of oil and solids from the wastewater. He has proposed the following scheme for treatment and utilization of oil palm wastewater.

Effluent is first cooled and then goes to anaerobic settling in shale soil for four days. The bottom slurry then goes to a centrifuge for dewatering, and the supernatant is returned to the settling unit. The recovered solids could be used as cattle feed. The liquor remaining after sedimentation is high in reducing sugars and has a low pH. Dr. Stanton suggests three possibilities for this liquor:

- Yeast fermentation to produce single cell protein
- Growth of chlorella in algae ponds, the chlorella to be used for animal feed
- Treatment in aerobic ponds which could reduce the BOD to 20 ppm

Aerobic ponds would be the cheapest approach, but land requirements would be large (8, 16).

Dr. Alagaratnam of the University of Singapore has developed a process for growing mold on palm oil mill effluent and simultaneously reducing the BOD. Mold of 18% protein (as 6.25 Total Kjeldahl Nitrogen) on a dry basis is recovered by filtration, dried from 60% moisture to 40%, and pelleted. The pellets can be extracted

with hexane to remove residual oil, and the residue used as chicken feed. Recovered oil is nonfood grade and is suitable for use in soap manufacturing. Oil removal can increase the protein content of the pellets by 30%. The average oil palm mill in Malaysia may discharge 320 tons of effluent per day into the river which would yield 9 to 10 tons of animal feed per day and 1½ tons of recoverable oil. The effluent from the mold fermentation has a COD of about 15,000 and it might be used to grow algae which are removed by centrifugation and then used as fish food. The effluent which now has a COD of less than 1000, can go to an oxidation pond where fish can be grown. The effluent immediately after fermentation still has too high an oxygen demand after fermentation, which could limit the utility of fermentation.

Dewatering of the aqueous sludge as it leaves the palm oil mill is undesirable because it will then be too viscous for fermentation. The fermentation scheme can be incorporated into the CENSOR process for making animal feed from palm oil effuent. A possible advantage here is that the CENSOR process by itself does not increase protein content(16); CENSOR is discussed later.

Dr. Alagaratnam's process has been developed through the laboratory phase, but needs engineering input prior to or during the pilot plant stage. In order for a disposable effluent to be produced by fermentation, greater utilization of the dissolved organics to reduce the COD is necessary. The extent to which dissolved oxygen controls the fermentation needs to be determined. Also supplemental nitrogen is necessary for the process. Dr. Alagaratnam proposes to use the effluent from rubber mills for this purpose, but the feasibility of this approach would depend upon the proximity of rubber mills and palm oil mills (16).

Chemara Research Station, Seremban, Kuala Lumpur, has done research on growing chlorella cultures on supernatant from overnight settling of the

sludge (21). Table 5 shows results obtained from an experiment using 2% supernatant. The COD and BOD reduction from chlorella growth was significant. However, the total nitrogen was not significantly decreased (21).

Table 5

Algae Culture Using 2% Palm Oil Sludge Supernatant (21)

Time days	pH	cell count no / ml	COD ppm	BOD ppm	Total N ppm	Amm. N ppm
0	6.2	1.3×10^6	1,251	660	23.8	0.9
2	6.5	9.3×10^5	1,000	398	-	-
6	6.6	1.2×10^6	821	186	-	-
8	6.7	1.3×10^6	387	72	-	-
11	7.0	1.6×10^6	412	78	-	-
18	7.1	1.2×10^6	496	28	23.3	0.4

The factors hindering culture growth are suspended solids in the sludge and color in the steriliser condensate.

In a second project at Chemara Station, single cell protein was produced through tower fermentation of the effluent. In the preliminary experiment, the supernatant from the sludge after overnight settling was used to grow fungus, yeast, bacteria and algae. Experimentation on fungus growth was done by sterilizing one gallon of filtrate, cooling and inoculating with spores of Neurospora sitophila. This work indicated that the filtrate will support fungus growth without nutrient manipulation (21).

Muthurajah (23) has suggested the use of palm oil mill sludge as a fertilizer because of its potassium, magnesium and phosphorous content (Table 3). Wood et. al. (21) report that correctly applied sludge makes an

excellent mulch. Land disposal raises problems. Ground vegetation is killed by direct contact, but Chemara experiments indicate that it can be applied in limited quantities, and indeed it serves as a soil conditioner by increasing the organic content so that infiltration rates are not severely affected. Properly conducted, such disposal can be possible and even agriculturally beneficial, but the viscous nature of the sludge makes distribution very difficult. Possibly anaerobic digestion would simplify this application while retaining the beneficial nutrient content (21). Webb (17) reports that the fibrous residue from the oil palm industry can be made into mulch for the production of mushrooms. Muthurajah & Devendra (22) have suggested the use of pressed fibers in its normal form for cattle feed. Press fiber composition on a dry basis is shown in Table 6. Commercial press fiber has about 30% moisture.

Table 6

Palm Press Fiber Composition (22)

Crude protein (N x 6.25) (%)	4.2
Ether Extract (%)	7.7
Crude Fiber (%)	56.3
Soluble Carbohydrates (%)	28.5
Ash (%)	3.3
Ca (%)	0.31
P (%)	0.13
Mg (%)	0.52

CENSOR PROCESS

"Considering the various problems encountered in the past, such as

thixotropic properties of the raw sludge when heated, high cost of oxidation, the extensive and expensive single approach biodegradation system which results in the incomplete utilization of all materials and therefore a continued pollution problem, the following system has been designed and successfully carried out on a commercial pilot scale (24)."

This mechanical process called CENSOR (centrifugal solids recovery) shown in figure 6 was developed by Dr. Brian Webb of the University of Malaya to produce animal feed from oil palm wastewaters. The wastewater is first dried to 45% moisture by mixing with various adsorbents which also have feed value. This adsorption step reduces the total amount of heat that must be applied in a rotary drum drier to reduce the moisture of the final product to an acceptable level.

The adsorbent materials used in the CENSOR system include tapioca (MECRO), oil palm kernel meal (from the kernel oil extraction process) and the sludge or sediment from sludge fermentation depending on the choice of alternatives (Figure 6). In addition, to minimize fuel costs, waste heat from the boilers at the palm oil mills can be tapped to provide energy for the hot air dehydration phase. Tapioca is used to provide a diluent for the high oil content of the other materials and to act as a conditioner for the mix,while also providing a good energy source as a feed material (24).

Some further description of the various steps will now be given.

a) Concentration

The first requirement of the most economical systems is to concentrate the raw sludge effluent to reduce the very high moisture content. By reducing the moisture from 95-90% the quantity of water to be removed is almost halved. In Malaysia, Pamol Sdn Bhd in Kluang has consistently reduced the sludge moisture to 89-90% by the conventional disc-plate centrifuge.

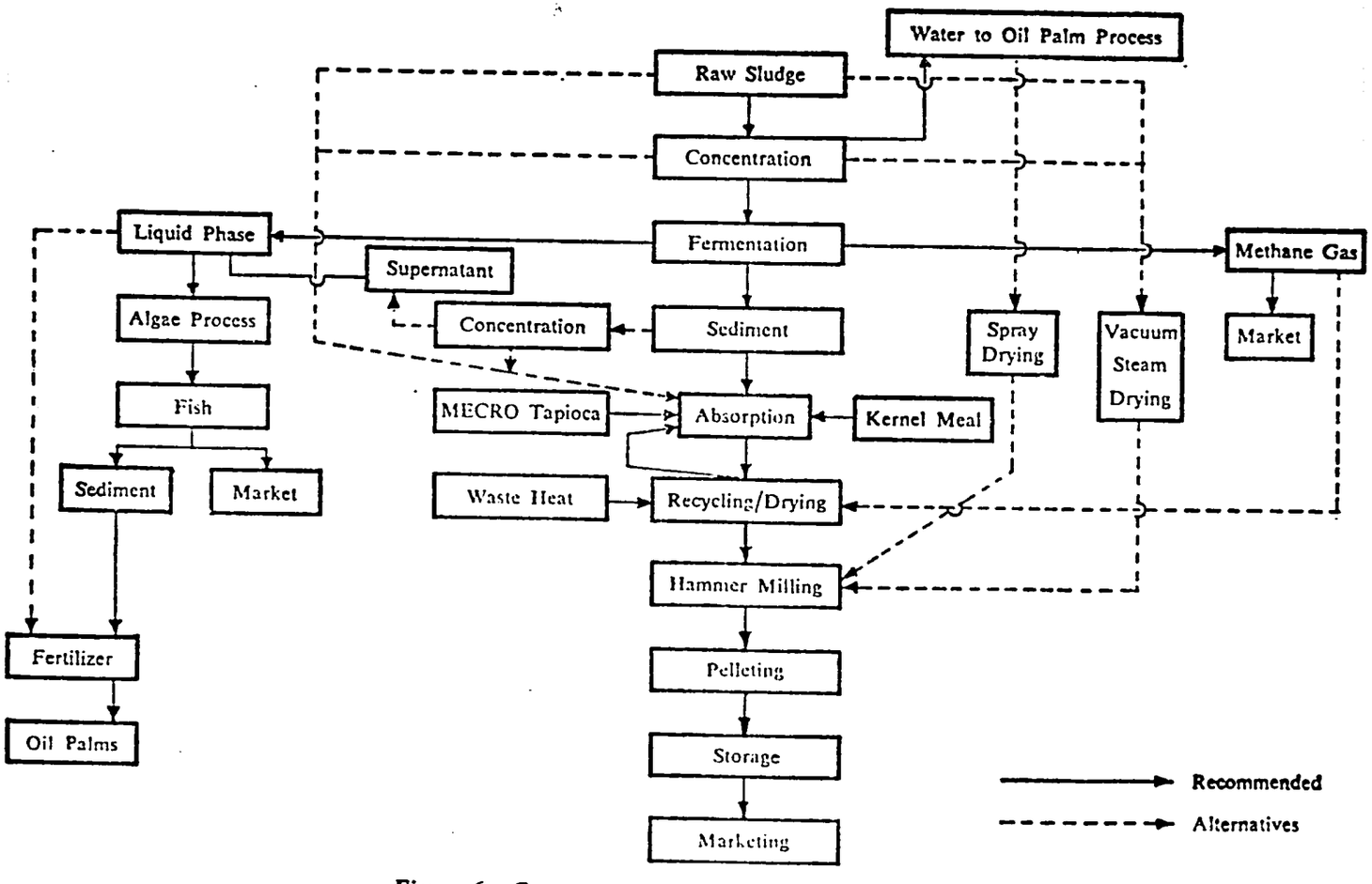

Figure 6 Censor flow process chart (with alternative) (24)

Harrisons & Crosfield have achieved somewhat greater reduction using a 3-stage decanter centrifugal and other process modifications.

By using fermentation after a first stage reduction to 90% moisture content, a sediment is produced which is normally about 85% moisture. This can easily be reduced to 75% by a conventional disc-plate type centrifuge. The latter system has the advantage of upgrading the solids from the fermentation stage.

The importance of the concentration step is shown by the following example (24). The sludge from Bukit Rajah mill which averages 94-96% of moisture content without further concentration, requires almost 2 tons of absorbent material for every ton of sludge solids. In contrast, for the sludge from Pamol averaging 89-90% moisture content, only 1 ton of absorbent is needed. Using the 75-80% moisture content fermentation sediment, only ½ ton of absorbent was needed.

b) Fermentation

Anaerobic fermentation can increase the crude protein content of raw sludge, thereby improving its suitability for animal feed. A liquid phase which has fertilizer value and methane are also produced. Sedimentation following fermentation will reduce the moisture content of the solids, facilitating the processing of sediment for animal feed. The liquid phase arising from fermentation and sedimentation is run off to settling tanks for further digestion and germ removal to obtain a better effluent for the growth of algae. The algae from a good source of vitamins and proteins for fish culture which can be carried out in the overflow arising from algal ponds. The final discharge from the fish ponds will contain the end products of the decomposition of organic matter, and these minerals will be suitable for use as fertilizer. A biochemical assay of the fermentation solid is shown in Table 7 and the liquid phase in Table 8.

Table 7

Biochemical Assay of Fermentation Sediment (24)

pH	5.4
Total solids (%)	5.1 (1.95–7.54)
Moisture (%)	8.0
Crude proteins (%)	12.5 (11–14)
Phosphorus (%)	0.81
Calcium (%)	3.33
Potassium (%)	7.3
Magnesium (%)	0.81
Crude fat (ether extract) (%)	16.0
Crude fibre (%)	9.8
Ash (%)	18.0
Nitrogen-free extract (NFE) (%)	34.9
Salt (NaCl) (%)	0.5
Gross energy (Kcal/g)	1835

Table 8

Biochemical Assay of Liquid Phase (24)

pH	6.8
Moisture (%)	95.3
Total nitrogen (%)	0.93
Potassium (%)	5.5
Calcium (%)	5.4
Magnesium (%)	2.2
Phosphorus (%)	0.67

3) Extraction of Water (24)

"The recommended CENSOR extraction system involves the use of a mixture of MECRO tapioca meal and palm oil kernel meal into which the liquid slurries of either raw, concentrated or fermented sediment are absorbed. The principle advantage of this stage of the process is that the slurries are brought through the "gel" barrier without applying heat. The solid-wet mix is then dried in a high temperature, high air speed, pneumatic injection rotary drier which is the same as that used for producing MECRO tapioca meal. Due to the high moisture content of the slurries, it is necessary to recycle the dried mixture through the absorption stage in order to build up

the quantity of sludge solids in the final product, so as to ensure a higher quality meal and to reduce the quantity of cost inputs such as tapioca and kernel meal. The number of recycles necessary will depend on the variation of input slurry chosen. The raw untreated sludge (75% moisture) requires at least eight cycles, whereas the fermentation sediment at 75% moisture content requires only three cycles. The lower number of cycles is more economic, and the lower moisture content slurries also require much less heat.

Waste heat from the boiler chimney can provide the bulk of the drying heat requirement, and if the boiler is of the induced draft type there is very little added expense in adapting the CENSOR dryer to an oil palm mill. This adaptation should be capable of replacing at least 75% of the heat requirement, if not all of it where lower moisture content slurries are used. However, it is recommended that a supplementary petroleum fuel oil burner be provided to ensure an adequate heat supply to maintain the required product throughput. After drying, hammer-milling and pelleting are normal processes as used in any feed mill.

The alternative extraction systems of spray-drying and vacuum steam-drying are not economic propositions because of the high energy requirements, poor efficiency in producing steam, and the type of capital equipment involved. The recommended extraction process (Figure 6) is the simplest and cheapest to operate and develops a very viable by-product industry.

There are various modifications to this concept which should result in different quality meals and different cost structures. For instance, one can eliminate the fermentation process and directly absorb raw sludge into the drying process, but this will give a meal of lower protein content. Also, one can eliminate the use of kernel cake and use only tapioca, but one needs

twice the quantity of tapioca and hence twice the area of land to grow it on, and the resultant feed meal will be even lower in protein content."

Webb is also evaluating sourghum, maize, alfalfa, and grass as adsorbents. Probably the most limiting factor for CENSOR is that large quantities of adsorbents are required and their availability may be limited, particularly tapioca (16).

The plant in use at the Faculty of Agriculture, University of Malaya is capable of processing 1 ton of raw sludge/hr which with direct absorption will produce about 0.6 ton of CENSOR meal. Table 9 describes various products made by the CENSOR process. The bio-chemical properties of three of these have been analysed in relation to other animal feeds (Table 10). These results show that tapioca/kernel meal absorbent gives a better balanced product closely related to maize (24).

Table 9

Censor OTO 8	- Palm Oil Sludge + Tapioca only 8 cycles
Censor OKO 8	- Palm Oil Sludge + Kernel Meal only 8 cycles
Censor OTK 8	- Palm Oil Sludge + Tapioca + Kernel Meal 8 cycles
Censor OTKG 8	- Palm Oil Sludge + Tapioca + Kernel Meal + Grass Meal 8 cycles
Censor OTG 8	- Palm Oil Sludge + Tapioca + Grass 8 cycles
Censor OTPM 4	- Palm Oil Sludge + Tapioca + Poultry Manure 4 cycles
Censor OTK C3	- Concentrated Palm Oil Sludge + Tapioca + Kernel Meal 3 cycles
Pintake PTK 5	- Pineapple pulp + Tapioca + Kernel Meal 5 cycles

Table 10

CENSOR comparative biochemical analysis. (24)

Item	*Percentage*									*Kg/K Cal.*
	Moisture	*Crude protein*	*Fat*	*Crude fibre*	*Ash*	*NFE*	*Calcium*	*Phosphorus*	*Salt*	*Gross energy*
MECRO Tapioca	12.98	1.55	0.45	2.87	1.38	80.69	—	—	—	3590
Kernel Meal	10.91	12.51	14.32	15.69	3.02	43.55	2.64	2.49	—	5060
Sludge Solids	13.03	9.49	12.83	9.20	15.35	40.10	2.75	2.90	1.91	4665
CENSOR TO*	10.54	4.90	4.84	9.15	6.07	63.84	1.71	3.47	0.90	4680
CENSOR KO**	3.41	10.45	12.10	13.28	8.71	52.24	1.51	2.22	0.51	5025
CENSOR TK***	7.25	7.47	8.75	3.38	8.00	65.15	1.73	2.66	0.33	4860
Maize Meal	11.00	8.90	3.90	2.00	1.10	73.10	0.02	0.31	—	3918

*TO — Tapioca only
**KO — Kernel meal only
***TK — Tapioca + Kernel meal

} Absorbent material

Feeding trials using CENSOR products were encouraging. Censor OTK and OKO meals were evaluated on broiler chicks as a 50% and 100% substitute for maize in a complete grower ration. Replacement of 50% maize by Censor did not affect feed intake significantly although there was a slight reduction in weight gain. Total substitution however resulted in increased feed intake, depression in growth rate and poorer feed conversion. Metabolisable energy for the Censor meals is calculated at between 3,206 and 3.432 KCal/Kg. This first trial indicated Censor could be used to substitute 50% of the maize in broiler rations. Further trials are under way to investigate the effect of the relatively high oil and fibre content (25).

The CENSOR process has the advantage that it results in a dry animal feed that can be stored and transported readily. It is also a simple method that would be complementary to solids concentration steps at oil palm mills. If CENSOR could be integrated with oil palm mills, costs for transportation of the wastes to a feed production site would be eliminated. Fuel costs for the drying required after the adsorption might also be minimized because of the waste heat available at the mills which use waste fibres for fuel. The economics of CENSOR are currently being evaluated (16). As mentioned previously, local demands for animal feed are increasing due to development schemes for cattle, poultry, and swine and cocurrent shortages and high prices of animal feeds such as tapioca and grass-lucerne meal. There is also an interest in Malaysia in developing an export-oriented animal feed industry (24). Thus, the simultaneous abatement of pollution and production of animal feed give the CENSOR process strong potential.

V. PALM OIL REFINING

The refining industry for pre-refining prior to export has been rapidly developing in Malaysia since 1974. Today Malaysia exports caustic refined or neutralized oil; refined and bleached; and refined, bleached, and deodorized (26). Fractionation is primarily used to produce an edible oil and a solid fraction (squalene) used for soap manufacture and cooking fat. In Indonesia, a shortage of coconut oil for domestic consumption in 1972-1974 encouraged the development of two palm oil refineries (13).

The same pollution problems arising in the United States from caustic refining of soya oil exist in Malaysia from caustic refining of palm oil. However, consciousness of these problems are just beginning to appear. The soap stock which is produced has little food or feed value. Some of it is sold to local soap manufacturers, but there is a limited market for this waste usage. Caustic refining followed by acidulation, produces an acid oil byproduct which is now exported to fatty acid manufacturers. Numerous waterways in Malaysia serve as recipients of highly polluted effluents from caustic refining. In steam refining, the free fatty acids are collected as dedorizer distillate with little trouble from wastewaters. Studies need to be conducted in Indonesia on economic ways to utilize stearin and the soap stock (13).

At a recent UNEP/FAO conference (27), the problems related to soap stocks and volatiles from de-odourization were reviewed. It was felt that soap stocks should not be considered as residues and in fact they are not where appropriate facilities exist for fatty acid separation. However, such facilities are not available everywhere and wherever the oil extraction industry is not equipped to treat soap stocks, these could be considered as residues. Volatiles from the de-odourization, although they might constitute

a problem in some countries, are not considered to be a major residue problem. With regard to spent bleaching clays the group could not envisage any possibility of recuperation. It was, however, suggested to bleach the clays in order to recover most of the oil.

Palm oil is one of the world's best sources of carotene, an expensive substance which is a vitamin A precursor. Concentrations of carotenoids amount to 500 mg per kilo or more in the crude unbleached oil, with some oils having concentrations up to 3,000 ppm (28). Bleaching with clay or diatamaceous earth removes the carotene, which is not subsequently recovered. Deodorizing by heating to 150-180°C also significantly reduces the pro-vitamin A content. As tastes become more sophisticated, use of crudely refined red palm oil decreases, and more carotene is lost for nutritional purposes (28).

Possible approaches to avoiding this loss of carotene are (28):

- Deodorization in absence of air or under inert gases
- Deodorization under vacuum, possibly in presence of antioxitants
- Concentrating the colored fraction, deodorizing the rest of the oil portion, and then adding back the colored fraction to return the carotenoid content to higher levels.

The government of Indonesia is carrying out a program to combat vitamin A deficiency among children, and interest has been expressed in studying ways to recover pro vitamin A from palm oil.

V. CONCLUSIONS

Both Malaysia and Indonesia have large, centralized oil palm mills that generate a lot of wastes which have significant environmental impact. Because production is increasing significantly in both these countries, the problems will get worse. Both countries also have

nutritional needs which can be served by use of these residues. Because the industry is relatively small in the other oil palm producing countries, the problems and concern are not as severe. Pilot studies for utilization of oil palm mill wastes as animal feed are very necessary as the technology is just starting to be developed.

There is environmental concern and awareness in Malaysia, and much work on palm oil wastes is being done there and elsewhere. However, Malaysia does not really fit the category of a developing country, and they seem to have sufficient capability of their own to study and evaluate use of palm oil wastes as animal feed (29). Therefore a pilot project in Malaysia would not really be compatible with the goals of the AIChE AID/LIFE project. However, the knowledge gained by Malaysia in treating and using oil palm wastes should be applicable in lesser developed oil palm producing countries, e.g. Indonesia, Ivory Coast.

Because of animal feed nutritional and technical manpower deficiencies, a pilot project on use of food industry wastes could have more impact in Indonesia than in any of the other countries visited. However, Indonesia would probably be the most difficult country in which to implement an AID project because of

- Lack of environmental concern and awareness
- Cultural and political aspects
- Poor telephone and mail systems.

It might be more appropriate to transfer the technology being developed in Malaysia for treatment and use of oil palm mill wastes.

REFERENCES

1. Jamieson, George S., "Vegetable Fats and Oils", 2nd Edition, Reinhold Publishers (1943).

2. Technical Bulletin No. 1 "Introduction to the Malaysian Palm Oil Industry", Malaysian Palm Oil Producers Association (1973).

3. Kirkaldy, J. L. R. and Sutanto, J. B., "Possible Utilization of By-products from Palm Oil Industry", Planter, 118-126, Kuala Lumpur (1976).

4. Lanagan, Kevin J., "Malaysia Still Foremost Palm Oil Producer/Exporter", Foreign Agriculture Vol. XV, No. 6, pp 2-3, February 7, 1977.

5. "Oil Palm Market Survey", Oil Palm News, 20: 24-28, Tropical Products Institute (TPI), London (1975).

6. Pritchard, J. L. R., "Refining of Palm Oil", Oil Palm News, 20: 5-13, TPI London (1975).

7. Ahmed, Abdul Aziz Bin J. S. M., "Foreseeable Technological Problems", Palm Oil Processing Effluent Treatment Vol. 1, Ind. Polln. Control, Factories and Machinery Dept., Ministry of Labour & Manpower, Malaysia.

8. Stanton, W. R., "Treatment of Effluent from Palm Oil Factories", Planter, Kuala Lumpur 50: 382-387 (1974).

9. Barnett, Stanley; Nystrom, John; Dunlap, Charles: Trip Report AIChE-AID/LIFE Survey Team II, October 23 - November 17, 1976.

10. Olie, J. J. and Tjeng, T. D., "Some Notes on the Treatment and Disposal of Palm Oil Mill Effluent", Stork Amsterdam (1972).

11. Winoto, M., Personal Correspondence, April 12, 1976.

12. Steiner, Herbert H., "Zaire's Palm Oil Output Continues to Drop", Foreign Agriculture, 5, April 26, 1976.

13. Somaatmadja, Dardjo, "Fats and Oils Industry in Indonesia", International Development Research Center's Workshop on Fats and Oils, Selangor, Malaysia, 23-25 March 1976.

14. DeCourcy, John S., "Malaysia Streamlining and Strengthening Palm Oil Sector", Foreign Agriculture, pages 6-7, September 27, 1976.

15. Foreign Agriculture, page 5, April 12, 1976.

16. Fleischman, M., Steinkraus, K. H., Meade, R., AIChE-AID/LIFE Project Report of First Site Visit, July 27 - August 21, 1976.

17. Webb, B. H., "Potential Processes for Utilization of Agro Industrial Wastes for Production of Food" (1976).

18. Webb, B. H., Hutagalung, R. I., Cheam, S. T., "Palm Oil Mill Waste as Animal Feed - Processing and Utilization", Malaysian International Symposium on Palm Oil Processing and Marketing (1976).

19. Pamol (M) Sdn. Bhd., Kluang, Johore, Malaysia.

20. Hutagalung, R. I., Chang, C. C., Syed Jalaludin and Webb, B. H., "Evaluation of Agricultural Products and By-Products as Animal Feeds", Faculty of Agriculture, University of Malaya, Kuala Lumpur, Malaysia.

21. Wood, B. J., Seow, C. M., Tan, H. T., "Environmental Research in KGSB", Seminar on Protecting our Environment, 11-13 March 1976, Kuala Lumpur, Malaysia.

22. Muthurajah, R. N. and Devendra, C., "Recovery of Useable Products from Palm Oil Mill Waste for Animal Feed", Proceedings of the Agro-Industrial Wastes Symposium, Kuala Lumpur, Malaysia, 213-217 (1975).

23. Muthurajah, R. N., "Direct Utilization of Palm Oil Mill Waste by Application to Land", Proceedings of the Agro-Industrial Wastes Symposium, Kuala Lumpur, Malaysia, 178-181 (1975).

24. Rajagopalan, K., Webb, B. H., "Palm Oil Mill Waste Recovery as a By-Product Industry, Part I and II", Planter, Kuala Lumpur 51: 86-101, 126-132 (1975).

25. Webb, B. H., Hutagolung, R., Cheam, S. T., "New Developments in Palm Oil Mill Waste Treatment", Workshop Study on Agro Industrial Wastes, Kuala Lumpur, Malaysia (1976).

26. George Carlin, Personal Correspondence (1976).

27. "Residue Utilization - Management of Agricultural and Agro-Industrial Wastes", p. 36. Report of the UNEP/FAO Seminar on Residue Utilization -Management of Agricultural and Agro-Industrial Wastes, Rome, 18-21, January 1977.

28. "Increased Use of Red Palm Oil", 39-40, Food Science in Developing Countries, National Academy of Science, Natural Resources Council, Washington, DC (1974).

29. D. L. Wilson, Counselor for Economic and Commercial Affairs, U.S. Embassy, Kuala Lumpur, Malaysia.

PALM OIL - RESOURCES

(People, Institutions, etc.)

INDONESIA

Dr. Dardjo Somaatmadja, Director
Chemical Research Institute, Ministry of Industry
Jalan Ir. H. Juanda 57
Bogor (West Java), Indonesia (Phone: Bogor 68, 845)

Ir. Hastjarjo
RISPA, Kampung Baru
Medan, Indonesia

Mr. A. Muluk Lubis, Director General of Plantations
Jalan Letjen S. Parman 73
Slipi, Jakarta, Indonesia

Ir. Jurjono
Pabrik Gula Madukismo
Yogyakarta, Indonesia

Dr. Kantor Pemasaran Bersama
Sumut/Aceh, P.O. Box 488
Jalan Balai Kotu No. 8
Medan, Indonesia

Dr. P. N. Perkebunan
Sumut/Aceh, P.O. Box 488
Jalan Balai Kotu No. 8
Medan, Indonesia

Dr. P. Ritonga
Sumut/Aceh, P.O. Box 488
Jalan Balai Kotu No. 8
Medan, Indonesia

Mr. A. Rivai Saad, Head
Directorate of People's Plantation
Department of Agriculture
Jalan Jenderal S. Parman 73
Jakarta (West Java) Indonesia (Phone: 47366, 48638, 48635)

D. Setyadjie, Director, Studies & Projects
P.T. OMETRACO
JL. Jend. Basuki Rachmat 129, P.O. Box 197
Surabaya, Indonesia

Selo Soemardjan
Jl. Kebumen No. 5
Jakarto, Indonesia

Professor Winoto, Professor of Food Technology
Department of Chemical Engineering
University of Gadjah Mada, Sekip M-6
Yogyakarta, Indonesia

ENGLAND

Dr. J. T. Worgan, Lecturer
National College of Food Technology
Reading University
Weybridge, Surrey, England

J. L. R. Pritchard
Edible Oil Division, J. Bibby and Sons Ltd.
57 Great Howard Street
Liverpool, L3 7AW, England

Dr. J. B. Davis
Oilseeds Section, Tropical Products Institute
56-62 Gray's Inn Road
London WC1X8LU

MALAYSIA

Abdul Aziz Bin Ahmad, J.S.M.
Factories and Machinery Department
M.I.C. Building (Ground Floor), Jalan Tun Ismail
Kuala Lampur 02-10, Malaysia (Phone: 299578)
(government pollution control agency)

C. C. Chang, Faculty of Agriculture
University of Malaya
Kuala Lumpur, Malaysia

Mr. Ebbetson
United Plantations
Kuala Lumpur, Malaysia

Syed Jalaludin, Faculty of Agriculture
University of Malaya
Kuala Lumpur, Malaysia

J. L. R. Kirkaldy, Department of Chemical Engineering
University of Malaya
Kuala Lumpur, Malaysia

Dr. R. W. Mutharajah
Malaysian Agricultural Research & Development Institute (MARDI)
P.O. Box 208, Sungei Besi
Selangor, Malaysia (Phone: 356-286)
(oil plam waste treatment research)

K. Rajagopalan, Faculty of Agriculture
University of Malaya
Kuala Lumpur, Malaysia

Mr. C. M. Seow
Chemaro Research Station
Laku Road, Seremban, Malaysia
(oil palm waste treatment)

Koo Pai Sing, General Manager
Vegetable Oil Industries, K. B. 741
Johor Bharu, Malaysia

Mr. Sarjit Singh
Federal Land Development Authority (FELDA)
Kuala Lumpur, Malaysia
(government owned oil palm plantations and mills)

Prof. W. R. Stanton, Professor of Botany
University of Malaya
Kuala Lumpur, Malaysia
(algal treatment)

Mr. Wong Boon Sun, Assistant to Managing Director
Folin Food Processing Sdn Bld
Lot 16, Jalan 223
Petaling, Jaya, Malaysia

Dr. J. B. Sutanto, Department of Chemical Engineering
University of Malaya
Kuala Lumpur, Malaysia

H. T. Tan
Chemara Research Station
Laku Road, Seremban, Malaysia

Cheam Soon Tee, Faculty of Agriculture
University of Malaya
Kuala Lumpur, Malaysia

Mr. Foh Ling Wong
Folin Food Processing Sdn Bhd
Lot 16, Jalan 223
Petaling, Jaya, Malaysia

Dr. B. H. Webb, Faculty of Agriculture
University of Malaya
Kuala Lumpur, Malaysia (Phone: 03-51425, 54058)
(production of animal feed from oil palm sludge
by CENSOR process)

B. J. Wood
Chemara Research Station
Laku Road, Seremban, Malaysia

SINGAPORE

Dr. R. Alagaratnam
Department of Pharmacy, University of Singapore
Singapore
(growth of fungi on oil palm sludge)

Dr. Z. O. Miller, Scientific Director
Asia Research (Pte) Ltd.
P.O. Box 91, Alexandra P.O.
Singapore 3
(animal feed from oil palm sludge)

UNITED STATES

Charles T. Atwood P.E.
1515 Tahiti Avenue
Laguna Beach, California 92651 (Phone: 714-494-0553)
(palm oil, Indonesia)

George T. Carlin
Supermarket Technical Enterprises
219 East Lake Shore Drive
Chicago, Illinois 60611

William B. Darby, President
The Nutrition Foundation, Inc.
489 5th Avenue
New York, New York 10017 (Phone: 212-687-4830)

Dr. Werner Schmidt
Unilever Research Lab
Edgewater, New Jersey (Phone: 201-943-7100)

Frank Sullivan
F. E. Sullivan Co.
Maritime Ctr., P.O. Box 158
164 Tiburon Blvd.
Tiburon, California 94920 (Phone: 415-435-3855)
(palm oil processing)

Gus Mustakes
U.S. Department of Agriculture, Northern Regional Lab
Peoria, Illinois

Kevin J. Lanagan, Foreign Commodity Analysis
Oilseeds and Products, Foreign Agricultural Service

Extraction of Palm Oil in Africa

(Process of The Nigerian Products Co., Ltd.)

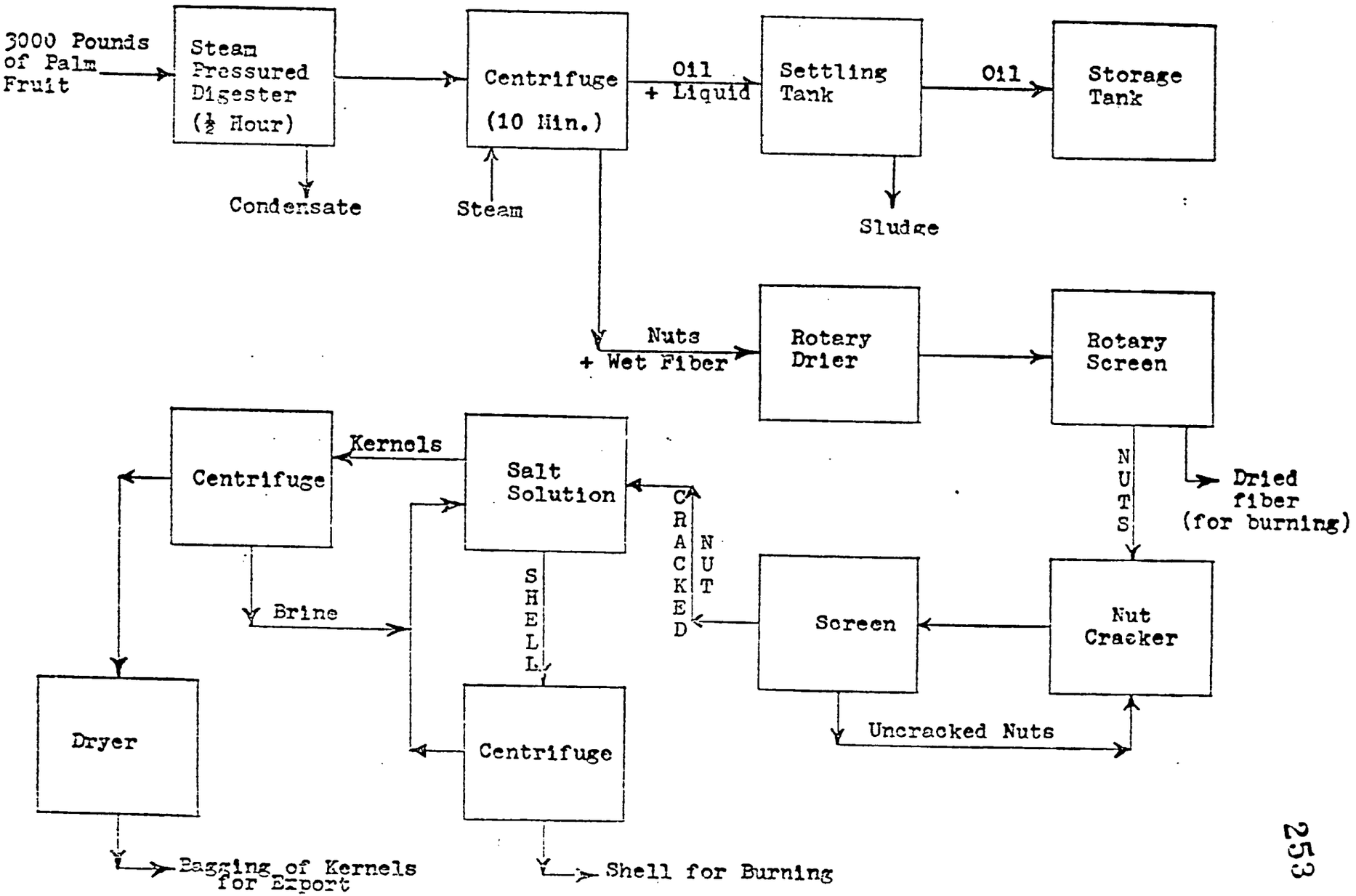

PINEAPPLES

Wastes and Environmental Impact

Pineapple wastes, which are principally wet solids, are generated in the field, collection sites and canneries. During peak harvest periods when there is insufficient processing capacity in the refinery, undersize, overripe and underripe whole pineapples are rejected at an average rate of 12% (1). In addition to the whole pineapples which are rejected, excess juice is dumped into waterways. Other wastes produced during canning are parings, pulp, ends, wash waters, and juice which is squeezed out when the wastes are used for animal feed. Up to 80% of the pineapple is wasted in the canning process, and in total, the canning industry is only using approximately 18% of the crop in Malaysia (2).

Sri Lanka raises some 4,000 acres of pineapples, with about 5,000 plants per acre, but only about 5 to 10% of the crop is canned. Most of the pineapples ripen in April, May and June, with a small season in December and January. Canned and Preserved Foods Ltd. purchases the Smooth Cayenne variety of pineapples and uses about 15,000 lb/yr. 60% of the weight of the raw pineapple is wasted as core, peel, and crown, while only about 38% of the raw weight gets in the can. The cores and peels from this and other canneries are not used, and are dumped.

Figure 1 shows the parts of a fruit which form the waste.

Pineapple shells and other wastes from the canning industry produce a juice which contains 8 percent of sugars and 0.58 percent of citric acid. A factory processing 40,000 tons of pineapple a year, with a 60 percent yield discards about $150,000 worth of sugar in this waste material (3). In Malaysia, 200×10^3 metric tons per year of pineapple wastes are being discharged from the three canneries and 28×10^3 metric tons per year are wasted in Thailand (4).

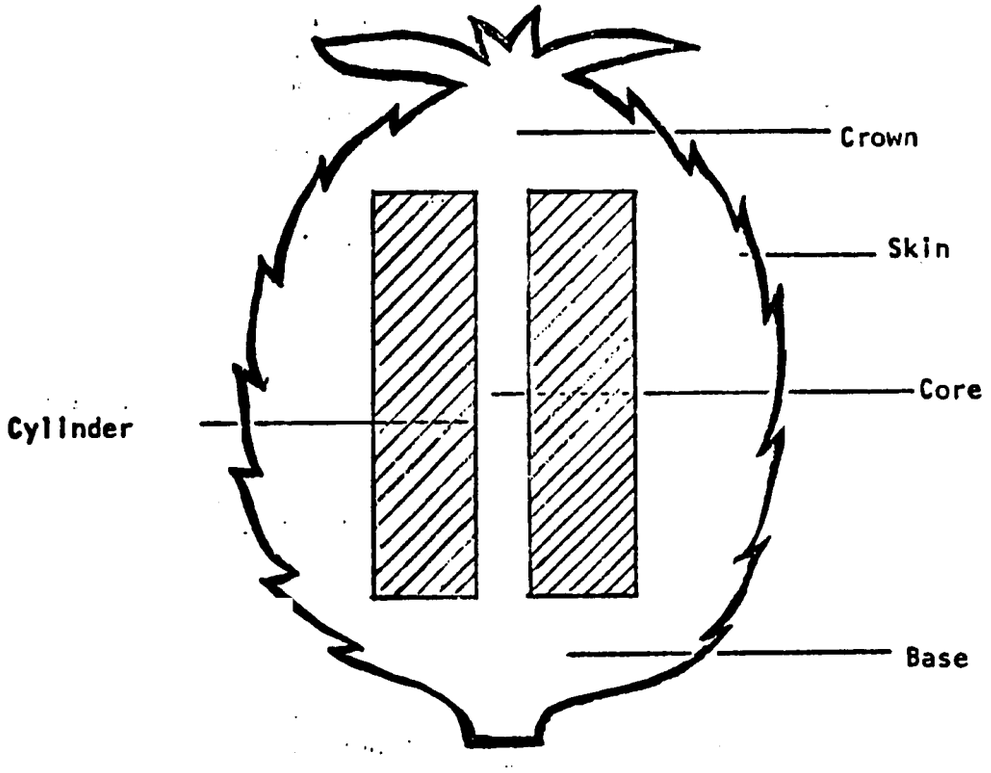

Figure 1 - Parts of a fruit which form the waste (5).

In Malaysia, the wastes from pineapple factories, (solids, wash water excess juice, juice squeezed from skins) are dumped into water ways. This provides breeding grounds for insects and decomposition of these wastes produces objectionable odors. The high oxygen demand (BOD_5 = 1.26 x 10^5mg, COD = 1.58 x 10^5 mg per processed) fruit causes ecological distrubrances. There is approximately 120 kg of COD per ton of pineapple processed and Malaysia processed 253,000 metric tons in 1974 (5). The concern over this pollution in Malaysia is evidenced by fines having been given. In the Ivory Coast, skins are returned to the fields, though wash water and skin juice go to waterways (6).

Established Uses of Pineapple Wastes

Use of pineapple wastes to produce silage and bran (dried waste) for animal feed is practiced in pineapple producing countries (7,8). In Thailand, where there is supposedly a pineapple shortage, 2000 tons per year (dry basis) of pineapple wastes as bran, is being used for animal feed (5). The chemical composition of bran in Table 1 shows that it is comparable to Napier grass, usually used for fodder. Moisture content of the wet solid wastes is about 80%.

Table 1 CHEMICAL COMPOSITION OF PINEAPPLE WASTE (1)

	Wet waste, %		Dry waste, %	
	Pineapple	Napier grass	Pineapple	Napier grass
Dry matter	14.28	24.94	--	--
Crude protein	0.90	2.28	6.30	9.13
Ether extract	0.21	0.64	1.45	2.75
Crude fibre	3.57	7.63	25.01	30.37
Ash	0.69	2.18	4.81	8.72
Nitrogen-free extract	7.66	12.33	52.43	49.04

In Ghana (6), cores and eyes go for pig feed.* Kenya Canners Ltd.* (Del Monte Pineapple) mix their cores and skins with urea for animal feed. Moisture is reportedly a problem. Cattle got diarrhea in past attempts in Ivory Coast to use pineapple wastes as cattle feed. The high soluble carbohydrate content has been suggested to be a possible drawback due to the rapid fermentation in the rumen. However, no report has indicated acidosis as a problem in the use of fresh pineapple waste. This may be due to the high fibre contained in the fresh waste (5).

*A detailed description of pineapple canning operations in Ghana and Kenya are given in appendices A & B

Sorenson (9) says that in Malaysia there is not much conversion of liquid and semi-solid peineapple canning residues into animal feeds. Food Industries of Malaysia (FIMA) is producing animal feed from pineapple cannery wastes for sale to Japan. The peels and core first go through a crusher and screw press, then to a hot air dehydrator. The dried material, 8-10% water, is then mixed with molasses up to 5% by weight, and the resulting mix is pelletized and bagged. Fuel costs are high because of the pressing and drying steps (10,11).

The juice which is released in the pressing will go to a pool, from which it is then discarded. Environmental impact of this release is not known. Folin Corporation in Kuala Lumpur has expressed interest in producing yeast from this juice to produce bakery bread. A common use of this juice in canneries is to produce a syrup for the canned pineapple (Ginaca) by concentration. Kenya Canners Ltd. use ion exchange for this concentration step (6).

Other uses of pineapple wastes are

- Manufacture of jam in Ghana from reject pineapples (6),
- Composting by Thai Tomato Industries, Chiang Mei, Thailand (8).
- Fermenting of extra juice squeezed from pineapple waste in Sri Lanka (6).

Japan is interested in importing animal feed made from Thai Tomato Industries pineapple wastes. However, Thai Tomato Industries believes that the drying costs for this waste usage are too high.

Waste Reductions

Mechanical grading rather than manual methods and the use of proper coring/peeling size knives will improve the recovery percentage. Reduction

of waste may also be improved by having fruits of uniform characters (e.g. shallow eyes) as well as by reducing the number of damaged fruits (5).

The amount of flesh recoverable from discarded parts of various sizes of fruits is shown in Table 2. The skin represents approximately 45% of the total fruit and about 18% of this can be recovered. The extraction of the juice from the waste would reduce the volume and weight of the material for disposal and hence reduce the pollutional load. The juice may be further concentrated as a syrup for canning (Ginaca) or further used as a substrate for fermentation, since it has a sugar content of approximately 6% (Table 3).

TABLE 2

RECOVERY OF FLESH FROM DISCARDED PINEAPPLE PARTS (5)

Type of waste	% of total fruit		% of recoverable flesh	
	Size 3.25"-3.75"	Size 3.75"-4.25"	Size 3.25"-3.75"	Size 3.75"-4.25"
Skins	46.2	43.4	17.1	18.8
Ends	26.1	22.1	N.A.	N.A.
Cores	4.2	3.7	N.A.	N.A.

TABLE 3

RECOVERY OF JUICE AND ITS TOTAL SUGAR CONTENT (5)

Type of waste	Average % juice recovery	Average % sugar
Eradicated skins	65.6	4.7
End (Ind. flesh)	60.3	4.7
Flesh from skin	62.2	6.8
Cores	64.2	8.2

Further Uses of Pineapple Wastes

In view of the disposal and pollution problems, further utilization of pineapple wastes would be desireable. For example, greater use of bran as

animal feed in Malaysia would help. Complete utilization of raw material to minimize waste and pollution necessitates the recovery of nutrients from the presently wasted sources and their conversion to feed and food adjuncts (5).

The excess pineapple juice from canning which is dumped into waterways, can be used to produce still and sparkling wines (13). Alcohol and wine can also be made from whole rejected pineapples. Research is being done in Nigeria on fermentation of overripe pineapples to produce alcohol (14). MARDI (Malaysian Agricultural Research and Development Institute) has made a wine from rejected pineapples (Pine Dew) which they intend to test market (10,15). However, since Malaysians are generally not wine drinkers, this is not a promising product. All this work is at the laboratory scale. National Council for Scientific Research Zambia, has also converted pineapple wastes to wine.

Extracted juice from thepineapple wastes can also be fermented to alcohol and vinegar. Laboratory experiments at MARDI have shown that the yield of alcohol is about 10%. Similarly as much as 10% could be recovered as vinegar. Although vinegar is currently imported, the pineapple companies do not see a market for vinegar in Malaysia.

Solid pineapple waste may also be treated by fermentation (5). Several microbial approaches to pineapple waste recovery are possible depending on the end product desired. The production of single cell protein for both human and animal feed seems to be a promising field. Other by-products recoverable from fermentable carbohydrates of pineapple wastes include citric acid, lactic acid, sorbose, gluconic acid and tartaric acid, to name a few. "The natural citric acid content of pineapple wastes is too low for direct extraction. The alternative method is through fermentation. Extensive literature exists on citric acid fermentation using several media, especially beet and cane molasses which could be applied to pineapple wastes. The most common organism used in the commercial production of citric acid is a high-yielding strain of the mould, Aspergillus

niger. The sugar concentration of the medium has to be between 20% to 25%. The sugar concentration in the wastes is less than 10%. A further concentration of the juice and the addition of sugars are necessary before these wastes can be used as a medium for fermentation. The incorporation of cheap fermentable carbohydrate such as cane molasses would not only reduce the initial cost of conversion but also help to utilize yet another agricultural waste." (9)

Dr. Algaratnam of the University of Singapore (16) has done research on anaerobic yeast fermentation of the solid wastes to produce an animal feed. Lee Pineapple Company sponsored this work which has not yet been piloted. The University of Nairobi in Kenya (17) is considering pineapple wastes as a possible source of substrate for production of yeasts. Dr. Kothary of the Dept. of Food Science and Technology is growing Candida utilis on molasses and pineapple waste using urea and superphosphate as a nitrogen source. The solids from fermentation can go to ensilage, be dried and fed to animals, with or without addition of molasses, or go to algae ponds or fish ponds (18). This latter application could also be used for solid wastes without first fermenting them.

Earlier, the loss of sugar from pineapple shells and other canning wastes which produce a juice, was mentioned. The following process was developed in order to utilize 50 percent of this juice in the preparation of a syrup for canning pineapple slices (3). The pineapple shells and waste are comminuted in a hammermill using a screen with 1/4-inch perforations. The comminuted pulp is then run through a screw-press to extract the juice. The juice is centrifuged to separate most of the solid particles in suspension. The centrifuged juice is treated with a 4 Be $CaOH_2$ suspension, to adjust the pH 2/10 units above its original value. The calcium hydroxide treated juice is heated to 170° F. and filtered using a filtering aid. The clarified juice is treated with activated charcoal (1 percent by weight). The juice with the added carbon is heated to 170° F and maintained at this temperature for 30 minutes. After this heat treatment

it is filtered using a filtering aid. The clear, transparent juice obtained can be used in the preparation of a canning syrup for pineapple slices.

Crystalline sugar recovery is possible, but this would be a more expensive waste utilization than other possible uses. The seasonal nature of the pineapple industry discourages large capital investment. The Industrial Development Board of Sri Lanka is studying the production of pectin from pineapple peel.

Conclusions

Pineapple wastes, which can be used for nutritional needs, are of environmental concern, particularly in Malaysia. Conversion of pineapple wastes to animal feed without fermentation is an established procedure, however this apparently is not widely done. Of the 30×10^3 metric tons per year available in Thailand only 2×10^3 are thus used and there is little such use in Malaysia. However, this usage doesn't require piloting. Pineapple wastes are not considered important in Ghana due to the low quantity.

More suitable for pilot studies are the various possibilities for fermentation of pineapple wastes into the previously described products. Dr. Amara (19) believes that he could arrange for a pineapple waste utilization pilot study to be set up at Siam Food Co. in Thailand. However, MARDI in Malaysia might be a more appropriate place for fermentation studies since they already have been doing laboratory studies. Compared to Thailand, Malaysia also has greater

- quantities of wastes available,
- concern over environmental impact,
- animal feed needs (Thailand is an animal feed exporter).

However, there doesn't seem to be adequate private sector interest in Malaysia in using pineapple wastes as evidenced by

- limited current use as animal feed,
- limited industrial efforts on utilization,
- not following up Dr. Alagaratnams' studies at the pilot scale.

REFERENCES

1. Ma Ah Ngan, "Agro Industrial Waste Problems in Malaysia", pp. 1-7 in Proc. Agro-Ind. Waste Symp. 1975, Rubber Res. Institute of Malaysia, Kuala Lumpur.

2. Idrus & Kamari, "Increasing Food Production Through Better Utilization", Umaga/Faum Food Conference, 1975.

3. Cancel, L.E., Gonzales, M.A., and Nieva, F.Sanchez, "Utilization De Los Resuduos Del Enlata do De La Pina - Preparacion De Un Sirope Adecuado Para Enlatar Pinas En Rebanadas", Boletin 185, Sept. 1964, Universidad de Puerto Rico, Estacion Experimental Agricola, Rio Piedras, Puerto Rico.

4. Department of Science, Ministry of Industry, Rama VI Road, Bangkok, Thailand.

5. A. Kamari, A.Z., Idrus, Z., Merican, "Waste Problems in the Pineapple Industry", in Proc. of the Agro-Industrial Wastes Symposium, 1975, Rubber Res. Institute of Malaysia.

6. Reilly, P., Barnett, S., Schottmeyer, S., 3rd Site Visit, AIChE AID/LIFE Project.

7. Dr. Z.O. Müller, Asia Research (Pte.) Ltd. - animal feeds using pineapple wastes.

8. Dr. T.G. Ling, Zullig Corp. - formulation of animal feeds using pineapple trimmings and cannery wastes.

9. William D. Sorenson, UNDP/FAO, Lembaga Pertubuhan Peladang, Malaysia.

10. Fleischman, M., Steinkraus, K.H., and Meade, R., First Site Visit AIChE AID/LIFE Project.

11. Mr. DinMerican, Mr. Chne Kooi Onn, Food Industries of Malaysia (FIMA) - production of animal feeds from pineapple cannery wastes.

12. Mr. Ephraim Gil, Thai Tomato Industries - pineapple canning wastes as animal feed.

13. Steinkraus, K.H., Ramos, L.J., Layese, G.E., Yap, A., and Banzon, J., "Production of Still and Sparkling Wines from Philippine Pineapple Juice", Source Unknown.

14. Residue Utilization - Management of Agricultural and Agro-Industrial Wastes", report of the UNEP/FAO Seminar on Residue Utilization - Management of Agricultural UNEP and Agro-Industrial Wastes, Rome, 18-21 Jan., 1977.

REFERENCES (continued)

15. Ms. Zahara Merican, Malaysian Agricultural Research and Development Institute (MARDI) - fermentation of pineapple wastes to vinegar and wine.

16. Dr. Alagaratnam, Dept. of Pharmacy, University of Singapore - anaerobic yeast fermentation of pineapple cannery solid wastes.

17. H.J. Cuperus, Dept. of Food Science and Technology, University of Nairobi - pineapple waste as a substrate for production of yeasts.

18. Warren Pescod, Asian Institute of Technology, Bangkok, Thailand.

19. Dr. Amara Bhumiritana, Institute of Food Research & Product Development, Kasetsart University, Bangkok, Thailand.

20. Mr. Ekra, Plant Manager, Society for Development and Canning of Pineapple, La Nouvelle, Ivory Coast.

Appendix A- Pineapple Cannery, Ghana (6)

Cannery Division, GIHOC
P.O. Box 115
Nsawam

The Nsawan cannery, several miles north of our previous stop on the Accra-Kumasi road, processes two types of pineapples; Sugarloaf, which is too soft for mechanical handling, and Smooth Cayenne. Sugarloaf, with 18% soluble solids, is peeled by hand. The innards are separated into various cuts. Rejected sections are crushed and turned into jam. Cores and eyes are chopped and squeezed for juice. Pulp and peels go to waste.

The Smooth Cayenne pineapples follow the same procedure except that the process utilizes mechanical peeling, coring, and slicing. Slices are canned by hand, the cans automatically filled with hot juice, sealed, and sterilized in a batch unit. The cores of Smooth Cayennes are discarded.

Most of the waste has found no use, but there have been some experiments on feeding it to rabbits. Information found by the first team on the Malaysian work to reduce pineapple waste has been passed to Mr. Nubuor. This would be an important activity, as roughly 40% of the weight of these pineapples go to waste.

As with other food plants which we visited in Ghana, this plant was well under capacity, processing between 3,000 and 4,000 tons/yr rather than its 10,000 - 12,000 ton/yr capacity, because of a lack of raw material. Pineapples are canned 6 months of the year and citrus and other fruits the remainder.

The plant was equipped with modern machinery, most imported from Yugoslavia. It appeared to be operating without difficulty.

As with other plants in Ghana, and the pineapple plant visited by the second team in the Ivory Coast, the effluent wash water with juice and some solids was allowed to run out. Obviously, a small and inexpensive concentration or treatment unit would alleviate this situation.

Kenya Canners, Ltd.
Del Monte Ltd.
Box 147
Thika

The Del Monte Company operates a large pineapple cannery at Thika, rougly 20 miles northeast of Nairobi. The parent company in the United States owns the cannery outright but leases the land for growing pineapples from the Kenya government, as foreign citizens or corporations are not allowed to own land in Kenya. They raise all the pineapples they process. Kenya Canners is required by the government to buy pineapples from the farmers if they wish to sell, but have bought none for the past two years, for the farmers can get more money selling locally as fresh fruit than they can get at the cannery.

Pineapples are picked and loaded into truck beds and brought to the plant, backed up to a flume about 20 ft. wide, 3 to 4 ft deep and long enough for ten trucks to be backed up along each side of it. Fresh water in a very large stream is pumped into the end of the flume farthest from the cannery. The truck beds are tipped up in turn and the fresh gathered pineapples float toward the cannery, where they are picked up by an inclined lift and given an additional spray wash. They drop from the lift onto series of grading bars which separate the pineapples on the basis of diameter. The pineapples then drop to a conveyor system which feeds them into peelers and corers set to take the various sizes. Both peeling and coring are completely automatic, and will process a pineapple in about 1 sec. There are eleven lines of peeler-corer units and all were operating.

After having been peeled and cored, the pineapple cylinders drop to work tables where roughly 12 women at each cut off any remaining peel and eyes that the machines missed and pass the pineapple cylinders on to an automatic slicer. After the slicer, another group of about 50 women on each line pack the slices in cans to be sealed and sterilized. Broken pieces and part slices

are packed separately as pineapple segments andcrushed pineapple.

The pulp and cores are conveyed away to a chopper which reduces them to about 1 to 2 in. pieces, then loaded into trucks to be hauled away to a cattle feedlot which Kenya Canners operates. They have some 1100 cattle on feed and they can each eat about 80 lb/day of material (about 8-10 lb pineapple waste on a dry basis supplemented with 4-6 lb of a mixture of urea and cotton seed meal, soybean meal and corn gluten meal to bring the digestible protein level to 12% on a dry basis). The feeder cattle are purchased from nearby farms and ranches and run on grass for a short time with pineapple waste made available to get them used to it. In about two weeks time they eat it readily. The rate of gain is about 2 lb/day, which is somewhat lower than best feedlot operation of a typical United States Midwest feedlot where corn, silage, etc. are fed, and gain is 2.5 to 3 lb/day. This is attributed to the extremely high moisture content of the pineapple waste which cannot be easily excreted by the cattle. (Juice runs out of the truck as it is loaded.). They have plans to squeeze the material to recover the juice, which will be ion exchanged and used as a source of sugar for their canning operation. The 1100 head of cattle cannot use all the waste produced, roughly 15,000 tons/yr, and neighboring farmers are allowed to haul it away for feeding.

Evidently the price of feeder cattle and beef as controlled by the government does not allow any profit, even when feeding pineapple waste. There were 12 large feedlots operatingin Kenya a few years ago. They have all gone out of business except two. The same problem plagues the dairy farmers, who cannot afford to buy feeds for milk production. The supply of milk drops 30% through February, March and April, when grass is short, but increases again through May, June, and July when more rains come and pastures improve.

Del Monte has three pineapple canning plants:

Kenya	120,000 ton/yr
Philippines	250,000 ton/yr
Hawaii	100,000 ton/yr

In Hawaii the waste is dehydrated for dairy cattle feed in a rotary drier, while in the Philippines it is squeezed. On a dry basis, it contains 62% T.D.N., mainly starch and sugar.

While Del Monte says it is not making any money on the cattle feeding venture, it appears that the feeding operation does dispose of waste material which would be hard to get rid of otherwise. Nairobi has a sewage disposal plant, but it could not handle the waste which the pineapple cannery produces.

The canning plant operates two shifts per day and has a total crew of about 2600 people. The pay is as follows:

Plant employees - 10 shillings per day ($1.20 U.S.)
Agricultural workers - 8 shillings per day ($0.96 U.S.)

Appendix C - Pineapple Cannery, Zambia (6)

Rucom Ind., Ltd.
Lusaka

A pineapple and fruit cannery is the main loss item. The cannery is located in a rural area in the northwest on a dirt road; products can be transported only 100 miles/day by truck when the road is dry. Also, the government required pricing below actual cost until recently. In addition, there were no workshop or banking facilities, no spare parts, and too few trained people.

The pineapple cannery operates from November to March processing 16/ton/day. About 70% is wasted, including those that spoil because of capacity limitations. New equipment on order will replace worn out machinery and increase capacity.

RICE

I. Quantities of Rice and Rice By-products

Rice is the most important cereal grown in South-East Asia and the Far East, and the by-products are rice straw, bran, and hulls. In 1969-70 annual production of rice in the region (expressed as milled rice) was estimated at 182,135,000 tons, of which 94,000,000 tons and 59,649,000 tons were produced in mainland China and India respectively. Production in South-East Asia and the Far East constituted some 91 per cent of a total estimated 1969-70 world production of 200,550,000 tons of milled rice (1).

The kernel inside the outer husk of rough rice (paddy) is covered with the so-called "Pericarp" or "Bran" layers, which are the remains of the ovary walls. These are removed during the first stage of milling dehusked rice together with the seed embryo, and the two together form the rice bran of commerce. Under the pericarp layers lie the so-called "Aleurone" layers, which are removed in the final stage of milling, and which are generally referred to as polish. The starchy core remaining after removal of the pericarp and aleurone layers and the germ is referred to as milled rice (1).

When paddy is processed into milled rice, as high as 25% may appear as broken rice (2). In the milling, 30-35 per cent by weight is lost as by-products, of which about one third is represented by bran and polish and two-thirds by husk. In efficient mills yields of about 8 per cent of bran (including germ) and 2 per cent of polish may be expected. If all the rice produced in the South-East Asia/Far East region were processed into milled rice a minimum of 26,019,000 tons of bran and polish would have been produced in 1969-70 (1). This is a massive raw material source which if not unsed represents a considerable wastage and potential environmental problem

due to dumping. For example, most of the 3.2×10^6 metric tons of rice bran per year available in the Philippines is wasted, much of it being dumped into rivers (3).

Table 1 gives statistics for the estimated production of rice and its by-products during 1969-70.

Table 1 (1)

Estimated Rice Production 1969-70 in Different World Regions

Region	Production (Thousands of Tons)			
	Paddy	Milled Rice	Husk	Bran and Polish
S.E. Asia/Far East	260,193	182,135	52,039	26,019
North and South America	12,914	9,040	2,583	1,291
Middle and Near East	3,730	2,611	746	373
Africa, South of Sahara	2,793	1,955	559	279
Western and Southern Europe	1,610	1,127	322	161
Soviet Union	1,500	1,050	300	150
Miscellaneous	3,760	2,632	752	376
Total	286,500	200,550	57,301	28,649

In Thailand 2000-3500 x 10^3 metric tons per year of rice husk are available (4), of which none is reportedly used by industry. The estimated recovery of rice husk in Malaysia in 1969 was 235,800 tons (5). "In the past the quantity involved was small and well scattered, and therefore did not pose any disposal problem. However, at the milling centers, the disposal of large quantities of husk has become a problem (5)." At a National Agricultural Marketing Board plant in Lusaka, Zambia, rice is dehulled and polished at a rate of 1000 kg/hr with the hulls currently being discarded.

Other significant wastes are harvesting, storage losses, broken rice, and rice straw (2). Inadequate harvesting and handling become more serious problems during peak harvesting seasons, especially if the rice cannot be milled at once. It is estimated that 300 million tons of rice straw are generated annually in India, Indonesia, Malaysia, Philippines, Singapore, and

Thailand. Thailand has an annual availability of 7000-14,000 x 10^3 metric tons of rice straw (4) of which only 20 x 10^3 metric tons is used. In 1972, the estimated annual rice waste and by-product tonnage in Malaysia was 251,000 tons (2). In Kenya, a local irrigation scheme produces sufficient rice that 15,000 ton/yr of straw are produced and wasted. If this could be upgraded to cattle feed, high quality cattle could be produced in the area about Embu, which is dry and has poor grazing conditions.

II. Milling and By-product Composition

In the larger rice mills, processing is carried out in three stages viz. husking, milling and polishing, so that it is possible to collect each by-product separately. In smaller mills, however, the operation may be in two stages, the polishing and milling being carried out together. In the smallest mills all three operations may be carried out together. In such mills it will obviously be difficult to separate the three by-products so as to market them individually. Details of techniques and machinery used for the processing of rice are given elsewhere (1). The rice mills have varying capacities - from 0.5 ton/hour of huller-sheller type to 4 ton/hour in modern rice mills. These operate for 200-300 days in a year depending upon the number of crops in the area. In rural India, rice is mostly produced by hand-pounding of paddy and is consumed as unpolished brown rice (6).

The composition of milled rice and its by-products shown in Table 2, will depend greatly on initial composition and the milling techniques employed, and figures given in the literature can only be taken as a very general guide to what may be expected. It is difficult to separate husk, bran and polish completely in all but the most efficient plants, and some admixture with small pieces of broken milled rice is also likely. For the smaller less

efficient mills, therefore, the by-products are likely to be marketed as different grades of mixtures containing various proportions of husk, bran, polish and small pieces of milled rice. A good example of this is given by the composition of rice by-products produced in the islands of Luzon and Mindanao in the Philippines. Three grades of rice bran from cone mills (fine, coarse and bran-husk mixture) and two grades from husker rice mills (fine bran-husk and coarse bran-husk mixtures) were identified. However, it was pointed out that even this classification was arbitrary and very dependent on the rice mill operator. Evidence was also produced of variations in composition of by-products, which could be attributed to the variety of rice milled and the locality in which it was grown (1).

Table 2 (1)

Composition of Rice and its By-products

Material	Proximate Composition (Dry Basis), per cent				
	Crude Protein (N×6.25)	Oil	Crude Fibre	Ash	Nitrogen Free Extract
Husked Rice	10.4	2.3	1.3	1.3	84.7
Milled Rice	8.5	0.5	0.5	0.6	89.9
Husk	3.3	0.9	44.2	21.5	30.1
Bran	13.6	15.0	12.8	14.6	44.0
Polish	14.2	14.9	3.0	11.0	56.9

III. Rice Bran and Polish

Rice bran is a by-product of the milling of brown rice to produce white rice. Rice bran consists of the outer bran layers of the kernel and part of the germ, and constitutes 8.8 to 11.5% by weight of the brown rice and 8% of the rough rice. Generally in Sri Lanka polishing yields 4% bran, though when the paddy is highly polished 8-9% bran results. The protein content of the bran is higher than

any other portion of the kernel, and it contains more lysine and threonine than the whole rice. In addition to the protein, the bran fraction is rich in fat, starch, free sugars, vitamin B, and minerals. The major uses of rice bran are as animal feed and for the production of rice bran oil which is used for cooking. Rice bran also has human food possibilities.

A. Stability of Bran

The high oil content of bran and polish raises problems with regard to stability. Naturally occurring enzymes liberated during the milling process cause rapid hydrolysis of the oil of rice bran as measured by free fatty acid increase. This hydrolysis (or "Lipolysis") is very rapid, and it has been reported that the free fatty acid content of the oil may increase from about 3 per cent in fresh bran at the rate of 1 per cent per hour during the first few hours after milling, reaching about 60-70 per cent within a month. Lipolysis causes untreated bran to develop an unpleasant rancid odor and flavor during quite short storage periods. Rice bran is also known to catch fire spontaneously in the hot and humid climates, due to enzymatic action. The bran is thereby turned into a valueless waste which must eventually be dumped and thereby create pollution problems.

Rate of lipolysis in bran is dependent on moisture content and storage temperature. Drying to moisture contents of less than 4 per cent will retard but not stop lipolysis completely, while storage at low temperatures will also reduce lipase activity. Gas plasma irradiation has also been reported to inhibit lipolysis. However, the best methods of limiting lipolysis in fresh bran from a commercial standpoint are the removal of the oil by solvent extraction, and/or the inactivation of the lipolytic enzymes (lipases) by steam treatment. In the latter connection it has been shown that steaming at temperatures slightly in excess of 100 degrees C inactivates the lipases

within 5-10 minutes (Lynn, 1969). Dry heating at 110 degrees C for a period of 2 hours also inhibits lipolysis effectively by both inactivating the lipases and reducing moisture content (1).

Parboiling of paddy before milling by soaking, steaming and drying, using either the traditional methods or the more sophisticated procedures developed in the United States, would be expected to affect bran composition and its stability to lipolysis, and in fact it has been reported that bran from parboiled rice is more stable than that from milled rice (1). The oil content of bran from parboiled rice is higher than that from raw rice; 20.3% vs 14.6% for first quality and 10.4% vs 6.5% for second quality.

The X-M method produces a stable edible bran (Protex) by simultaneously milling and solvent extracting rice (1).

B. Rice Bran Oil

The oil content of rice bran is quite variable. Bran produced in large efficient mills may be expected to contain 15-18% oil while that from smaller mills may contain only 10% due to contamination with hulls and broken rice kernels. Refined rice oil produced from fresh or stabilized non-rancid bran is a useful edible oil roughly equivalent in properties to cottonseed or corn oil. In addition to uses as an edible oil, rice bran oil can be used as an anti-corrosion and rust-resistant oil, as an oil for the cosmetics and pharmaceutical industries, and as a carrier oil for insecticides. (8). The defatted bran is used for animal feed.

Solvent extraction is the preferred method for producing oil from rice bran. Some 20 years ago most oil was produced in Japan by hydraulic pressing, which only removed some 50 per cent of the oil (1), but this has now been superceded by modern solvent extraction plants. The expeller process is less suitable due to the low oil content and bulk fibrous nature

of rice bran. However, since solvent extraction doesn't lend itself to very small capacities, expelling would be suitable for village scale operations (9). The minimum size solvent extraction plant which could be operated commercially would have a capacity of around 25 tons of bran per 24 hours. Assuming a 300 day per annum operation, this would entail a supply of about 7,500 tons of bran per annum i.e. the output from mills processing 75,000 tons of paddy. The annual production of crude oil from such a plant might be in the region of 1,000 tons per annum. Food grade hexane is the usual solvent, although the use of alcohol is being studied in India (9).

The free fatty acids that remain in rice bran oil after extraction can be removed by refining with sodium hydroxide. Refining rice bran oil may pose technology problems at the village scale level. If extraction cannot be carried out feasibly in the village, the bran would have to be enzyme deactivated to reduce the free fatty acid formation during transportation to extraction plants (8).

One of the problems of producing rice oil in less developed countries is the scattered location and small size of most of the rice mills, which makes it difficult to collect suitably large quantities of fresh or stabilised bran for the production of oil on an economic scale (1). In India which has a large solvent extraction industry (30 plants), only 40-50 per cent of the available bran was extracted yielding 90,000 tons of oil (1975). In the Philippines and Indonesia there is only one plant each. The scattered nature of its production, the consequent difficulty of collection, and the highly unstable nature of bran (fat) induces the rice miller to sell the material quickly. Hence, storage over long periods and transport over long distances is generally avoided.

The only oil extraction plant in Indonesia is presently not in opera-

tion (10). This plant was completed in 1967 and has a capacity of 4 ton/day of rice oil from bran. Since its completion, it has never produced rice oil cheaply enough to compete with coconut oil in the market place. Some of the problems which were encountered include:

- Processing by one pass polishing systems leading to too many impurities in the bran
- Rancidity of the bran due to collection and transportation problems and the distance between the polishing mills and the oil mill.

In order to maintain its value as a raw material for the production of edible oil and protein feedmeal, the rice bran needs to be stabilized at the mill if stored, or else transported immediately to the extraction plant. In the Philippines, the rice bran oil mills are small, scattered, and not located near the rice polishing mills. Therefore, transportation costs of the bran are high and stabilization of the bran to avoid rancidity is necessary. Also, since the production of rice is seasonal, the bran would have to be stored and stabilization would thus be necessary. In this type of situation, proximity of the polishing and oil mills would facilitate the production of rice bran oil (3).

The lack of appropriate processing equipment, especially in small mills, is reflected by the very low production of rice oil in most rice producing countries at present. Such equipment exists in plants with daily capacities of about 100 tons. However, so far no appropriate stabilizing equipment of a small scale exists with respect to design, function, capacity and technological and economic efficiency, which would meet the requirements of the developing countries, particularly in the rural areas in a less developed stage of infrastructure (1).

The United Nations Industrial Development Organization (11) is seeking to develop equipment which could be operated in rural areas on a small scale to stabilize rice bran, thereby halting the deterioration and enabling further storage and transportation. If such a prototype stabilizer could be successfully developed, it will enable the stabilized bran to be stored for months and transported to existing solvent extraction plants for oil extraction and the production of edible oil and high quality meal for food and feed purposes. This would mean some 1.8 million tons of crude vegetable oil or 1.6 million tons of edible oil could be made available for human consumption in addition to some 6 million tons of extracted rice bran meal for protein animal feed.

The equipment required for efficient stabilization purposes has to be suitable for attachment to existing small scale rice mills and has to be operational with the minimum level of labor, skill and attendance, and no electricity and/or steam consumption. It would be the ideal solution if the stabilizer could be designed for rice husk fueling (11). Efforts are presently being made in Thailand to develop small scale steaming plants based on the autoclave principle, for stabilising bran from mills producing as little as 4 tons of bran per day (1).

In India several rice mills have installed simple and inexpensive bran stablizers where bran is heated to inactivate lipase making it possible to store rice bran for 30-40 days (9).

Japan is by far the largest producer of rice oil with a current annual production of 90,000 tons of unrefined oil (1). India and Burma are each estimated to produce about 20,000 tons of rice oil per annum, while Taiwan, South Korea, Thailand and the U.S.A. have estimated annual productions of 3,000, 6,000, 5,000, and 5,000 tons respectively. Total world

production of rice oil is probably only slightly in excess of 150,000 tons per annum, excluding possible production in mainland China. This is well below potential production based on the total amount of bran produced, which in India alone may be not much less than a million tons (assuming the oil content of the likely production of 6 million tons of bran to be 15-18 per cent).

An economic study showed that the sale of defatted rice bran and oil might be expected to yield around twice the revenue which would be obtained by the sale of unprocessed bran, making it economically advantageous to increase rice oil production in the less developed countries of S.E. Asia and the Far East. However, it will be essential that adequate quantities of fresh or stabilised bran are locally available so as to provide sufficient raw material to sustain an economic scale of operation (1). Unless small scale stabilizers are developed, it is unlikely that this will be realized, except in large modern efficient rice mills. The expansion of rice and production will therefore be dependent more on progress towards the modernization of rice milling in the less developed countries, with subsequent reduction in wastage of bran.

C. Rice Bran as Animal Feed

Currently, rice bran is used almost entirely as an animal feed. World production of rice oil is at present only around 150,000 tons per annum, meaning that only about one million tons of rice bran is defatted, and that all but 3-4 per cent of bran produced is fed to animals without further processing or wasted. Of the 3.2×10^6 metric tons of bran per year available in the Philippines, only 37,900 tons are used as hog feed (3).

Figures given in standard reference works for the proximate composition and feeding value of commercially available rice by-products and other

feed concentrates produced in S.E. Asia, are given in Table 3. It will be seen that rice bran and polish contain about 12-14 per cent of crude protein, which makes them rather superior in this respect to common feed cereals, but inferior to oil seed residues. The crude fibre content of rice bran is like wheat and maize bran rather high, but that of polish is much lower. Energy content as expressed by total digestible nutrients (calculated for ruminant animals) is quite high in the unextracted bran and polish but is obviously considerably reduced when the oil is removed. Defatted rice bran is comparable with wheat bran in energy content (1).

The high fiber content of rice bran makes it unsuitable for unlimited rationing to monogastric animals, but it can be fed in high proportions to ruminants. The bran could be used as a high protein additive to other less fibrous cereal grains and therefore increase its utilization as an animal feed. The low fiber content of rice polish makes it ideal for direct feeding to monogastric animals, especially poultry.

Rice like most other cereals is poor in calcium and iron, and rich in phosphorous. Most of the minerals of rice will be contained in the bran and polish. However, about 90% of phosphorous in bran is present as phytin and is therefore largely nutritionally unavailable. Bran and polish are also rich in the B group of vitamins with the exception of cyanocobalamin (B-12). This makes them important sources of B vitamins for monogastric animals. Bran and polish have 37% excess lysine compared to milled rice, giving bran and polish a considerable nutritional advantage.

Unstabilised bran which has become rancid, may be unpalatable to animals, and it is, therefore, highly desirable to stabilise it by steaming. Solvent extraction will largely remove flavour problems but will reduce the energy value of the bran. The possibility of contamination with husk,

Table 3

Composition and Feed Value of Rice Milling By-Products and Other Feed Materials, Per Cent (1)

Material	Moisture	Crude Protein (N×6.25)	Oil	Crude Fibre	Ash	Nitrogen Free Extract	Digestible Crude Protein	Total Digestible Nutrients
Rice Bran	9.2	12.4	13.6	11.6	13.3	39.9	8.4	67.4
Extracted Rice Bran	9.1	14.3	3.1	12.0	13.6	47.9	9.7	55.3
Rice Meal	8.9	12.9	13.7	6.4	8.6	49.5	7.5	71.5
Rice Polish	10.2	12.8	13.4	2.7	9.9	51.0	9.7	81.5
Rice Husk	8.0	3.9	1.4	33.5	14.5	39.2	0.1	9.9
Wheat Bran	13.0	15.1	3.8	9.5	5.8	52.8	10.9	56.4
Maize Bran	11.8	8.4	4.2	11.7	1.9	62.0	5.5	70.9
Cottonseed Cake (undec)	12.0	20.3	4.8	21.8	5.8	35.3	15.6	49.1
Cottonseed Cake (dec)	10.0	41.1	8.0	7.8	6.7	26.4	35.3	72.1
Groundnut Cake (undec)	10.0	30.3	9.1	23.0	5.7	21.9	27.8	67.4
Groundnut Cake (dec)	10.0	45.4	6.0	6.5	5.7	26.4	40.5	75.6
Coconut Cake	10.0	21.2	7.3	11.4	5.9	44.2	16.6	76.4
Soya Cake	11.0	44.9	5.8	5.3	5.6	27.4	40.4	77.2

especially for material amanating from smaller mills, should also be mentioned (1).

Rice bran and polish have been used in the United States and the Philippines successfully for pig rations. However there are some limitations to this usage based on weight of the animal (12). Rice bran with a fiber content less than 15% can be used in small proportions for poultry feed (13). Most of the world production of rice bran as feed is presently fed to ruminants, both dairy cows and working bullocks and buffalo (7).

Defatted bran (after oil extraction) can also be used for animal feed. While it is not quite as digestible as undefatted bran, its protein content is higher and its storage life is considerably longer. Defatted rice bran has also found utilization in Japan in the fish processing industry. The rice bran is used for the adsorption of fish soluble materials. This bran can then be processed for second generation use as animal feed.

If stabilized rice bran and polish is available it can be compounded with locally available vegetable products such as cereals other than rice and other by-products, such as cottonseed and groundnut expeller cake, soya meal, and molasses (1). These materials are often not fully utilized in South-East Asia and the Far East.

There is a large and increasing demand for imported animal feed materials in the developed countries of Western Europe and Japan. To satisfy this demand large quantities of oilseed cakes and meals and other materials are exported from the less developed countries of the Far East and South-East Asia. Exports of rice bran at present form only a minor part of this trade but nevertheless the quantities already exported are by no means insignificant. For example official trade statistics show that 61,400 tons of solvent extracted and 1,356 tons of unextracted rice bran valued at

around 12 million rupees were exported from India during the period April 1965 - March 1966. There is no reason why this trade should not be expanded considerably provided that material of the appropriate quality can be produced (1).

D. Human Food Possibilities for Rice Bran

In wheat and rice based diets lysine is generally considered to be the limiting amino acid. This emphasizes the nutritional advantages of utilizing bran and polish which have a higher lysine content than milled rice, in these protein deficient diets of Southeast Asia. Vitamin B deficiencies resulting from milled rice diets can also be overcome by using bran. In the Philippines 12.6 x 10^3 metric tons per year of rice bran goes into production of tiki tiki, a vitamin B-1 rich concoction (3).

High fiber content as well as possible rancidity are the chief difficulties associated with using rice bran and polish as food. Rancidity could be controlled by oil extraction or stabilization prior to use as a food. In fact, it is extremely unlikely that rice bran could ever be seriously considered for food unless it were solvent extracted. Steam treatment may still be necessary even for defatted rice bran due to flavour problems which can occur due to the 1-3% residual lipids in the extracted bran (14). The X-M process is currently the most promising method for producing rice bran suitable for food. The product, Protex, is a mixture of defatted bran polish, and germ; it has a combined fiber content of 6-8% as compared to 12% in defatted rice bran. Protex has been used in a number of baked goods including bread and biscuits in proportions of up to 15% without adversely affecting appearance or palatability. Due to the high lysine content, this product complements the amino acid content of wheat flour and significantly boosts the combined vitamin B content. Protex has been used

with rice flour on a 1:2 basis for production of extruded products such as breakfast foods and snack bases with a protein content of 20-25% dry basis (1).

Air classification and sieving of finely ground solvent extracted bran, have been tried as methods for producing low fiber and high protein content material suitable for human food (15). Air classification can produce a high enough grade material for incorporation into human food. In sieving, 30% of the original material, now low in fiber and rich in protein, is recovered. Sieving which is simpler and cheaper could potentially be employed at the mill site and economically recover a protein concentrate.

An edible flour has been produced from defatted rice bran by dry grinding and sieving. When mixed with wheat flour it can be used in baked goods. Rice from flour can be produced cheaper than imported wheat flour which makes it a useful flour extender. Rice polish when prepared under carefully controlled and hygienic conditions, is being used in waffle and pancake mixes and as a dusting compound in bakeries. A major use is as a component of instant rice cereal for infants (16). Rice bran and polish have distinct advantages over other cereal grains as a source of the B-vitamins, linoleic acid, (an essential fatty acid), amino acids, and in being markedly hypoallergenic. This latter characteristic makes bran and polish a good cereal substitute for those who cannot tolerate wheat, rye, barley, or oat products because of allergies to these cereal grains.

Fermenting rice by-products to produce single cell protein for animal feeding is another possibility for meeting the high protein food requirements in developing countries. Studies on growth of the fungus S. pulverulentum of suspensions of fine wheat and rice bran and polishings showed high yields of fungal biomass with comparable protein contents to those obtained

on flours (17). A process has been suggested to produce 10^4 - 10^5 tons per year of a food grade product.

Rice bran is presently being used in Japan on a commercial basis as a medium for growing mushrooms.

Protein Concentrate from Rice Bran - The U.S. Department of Agriculture has developed and piloted a wet alkaline extraction procedure to isolate human grade protein from rice bran (18). Protein extraction was also successful on bran which had been stored and turned rancid, although twice as much alkali was required as for fresh bran. The protein in heat treated bran is denatured and is less suitable than raw bran for protein extraction.

Acid precipitated concentrate exhibited higher protein, fat, and starch contents and lower fiber and ash than those precipitated by heat, when starch was retained in the product. Washing the products prior to drying lowered yields but increased the levels of protein and fat compared to unwashed products. If the rice bran oil is not removed, the product contains 23 - 33% protein, 33 - 48% unsaturated fat, 15 - 23% starch. If the starch is removed first, the product contains: 34 - 38% protein and 49 - 54% fat. The unsaturated fat should probably be extracted first following a treatment to stabilize the oil. Thus the protein content of the product would be doubled. Yields of concentrate ranged from 14 - 20%. The yield is influenced by bran particle size and type of rice bran (18). The concentrates contained 300-400 ppm of iron, making them a potentially good dietary source of iron.

Protein efficiency ratios (PER) and nitrogen digestibility were determined on rats for rice bran and heat and acid precipitated concentrates prepared in a pilot scale operation. The PERs of both the acid and heat precipitated concentrates were significantly greater than that of rice bran.

Lysine content is also higher in the concentrates than in the bran.

Ultimately it is anticipated that the protein concentrates would find use in human foods. Possibilities are as a lysine supplement in flours and as an additive to non baked goods, e.g. meat extender, soy milk. Dr. Saunders, Western Regional Research Laboratory, ARS, points out that the price for rice bran remains low because there is more available than feed millers are using in animal feed formulation. It is therefore timely that this by-product be tapped as a source of protein for human consumption (18). Considering that the traditional sources of protein such as meat, fish, egg and legume crops are getting to be more expensive and scarce, rice bran offers some potential to augment these existing sources. Rice bran protein in whatever form, be it as an isolate, concentrate, or extract, will surely go a long way in terms of alleviating the protein malnourishment in countries such as the Philippines.

Dr. Pablo of the Philippine Women's University (19) wants to pilot a village scale unit at Cavite using the USDA wet alkaline process to extract rice bran protein for use in baby foods. Inasmuch as there is a tremendous need for protein for infants, the product could have considerable impact on improving nutrition of children in the Philippines. At the same time, it would utilize a waste product of the food industry in producing the new human food. A rice bran cooker is available for village scale stabilization. The economic feasibility of the process is now being evaluated, and if it looks favorable, the National Nutrition Council will fund part of the pilot study and AID assistance will also be sought.

Evaluation of the pressed residue after extraction indicated that it had potential value as a ruminant feed. This residue is comparable in digestability to dehydrated alfalfa, containing approximately 15% protein.

If the supernatant remaining after centrifugation is not recycled, it can be evaporated to recover the soluble proteins and sugars which are 7.3% and 51.2% respectively on a dry basis. The sugars present are sucrose, glucose, fructose, and raffinose which may have value as a feed molasses after concentration.

E. Other Uses of Rice Bran

Rice bran wax has been made in the laboratory by the Applied Scientific Research Corporation of Thailand (20). It is a white odourless product that could potentially be used in industrial formulations for polishes, furniture, floor, and car waxes, or as an insulator of electrical wiring and cables.

Processes for the production of amylase, amylglucosidase, and pectinase from defatted rice bran have been standardized by CFTRI, India. The reported demand for these enzymes is 600 tons per annum (21).

IV. Rice Hulls

Very large quantities of hulls are dumped or burned as in Ecuador, Ghana, Sri Lanka, and Thailand (about 2000-3500 x 10^3 tons/yr) (4). These alternatives are becoming increasingly unattractive due to air pollution from burning and handling costs and land requirements in the case of dumping. The greatest potential utilization for rice hulls seems to be for fuel, industrial and animal feed purposes.

A. Fuel Usage

Three kilos of rice hulls are approximately equivalent to 1 kilo of fuel oil in heating value. A great deal of rice husk is used to meet the energy requirements of rice mills. Due to inadequate or obsolete equipment, most rice mills are operating at low efficiencies on this fuel resulting in wasted energy and high operational costs. When efficiently used, there is

wasted energy and high operational costs. When efficiently used, there is more energy available from the husk produced in the rice mill than is required to operate the rice mill itself (22). Hulls are therefore a possible general fuel source. In Sri Lanka, if the rice has been parboiled, which is the way part of the crop is processed, the husk after milling may be burned in the steam boilers. The Paddy Marketing Boards' boilers are being converted from oil to use husk. The excess energy is used to run the mill. While this disposes of a waste material, the capital required is very high. In the Philippines, Edmond Borromeo is considering using rice hulls to provide indirect heat for drying banana flour. The residue remaining after using rice husk for fuel may also be used as a raw material for other industrial purposes in a like manner as if fly ash, e.g. road construction materials.

The husk may also be pressed to briquets, which may be used to replace firewood, the most common fuel in Sri Lanka. However, as with coconut refuse there is a collection problem. for there are over 1,000 paddy mills in Sri Lanka, ranging from 0.5 to 2 ton/hr capacity. They are processing approximately 1.3 million ton/yr of paddy. Another possibility to produce methane for fuel by fermentation of husks.

B. Industrial and Non-Nutritional Uses

There are a large number of industrial applications for rice hulls which could be expanded. Some of the most promising end uses are as filter aids, abrasives, and carbon and silicon sources. The biggest industrial potential, however, appears to be as a building material.

Over 20,000 tons of rice hulls are annually used in the U.S.A. as a filter aid in producing juice from non-citrus fruits (23). Rice hulls are also used as abrasives in tumble-cleaning and polishing agents, soft-grit blasting materials, and in hand soaps.

In India, rice husks are used in manufacture of activated carbon and silicon carbide. The Georgia Institute of Technology is investigating production of charcoal from rice husks. Production of silicon tetrachloride for rice hulls has been investigated in the United States. Furfural production is an attractive possibility, providing an economic quantity of husk is available over a long-enough period of time to justify the large capital requirements necessary to establish such a plan. In the United States, paddy husk is a raw material for furfural.

An unusual use made of ashless burnt husk in India is by washermen who mix it with soda ash and wash their laundry with the mixture. The black ash that results from burning may be used as a soil reclaimer. Other possibilities are activated carbon and rubber filler. The white ash that appears upon complete burning can be used in cement. In Thailand, rice husk along with coconut fibre has been successfully tested as a filtration medium to produce clean water from river water. In the Philippines, a cyclone burner has been designed which is currently under test using rice husk. Rice is also being used for flue curing of tobacco. Another interesting application of rice husk is the preparation of molecular sieves which is currently being investigated in India as also is the manufacture of oxalic acid from rice

husk. In the manufacture of plywood, finely ground materials like wheat flour are used as extenders during the glueing operation. Detailed investigation is needed to see if husk of the desired fineness can be used instead. Some preliminary studies have shown promising results (9).

The Council for Scientific and Industrial Research in Ghana (CSIR) has considered converting rice hulls into brick or vitreous dishes by mixing with bauxite wastes. Another possible use of the husk is to make a building board of it. Unfortunately the material is so abrasive that it blunts tools.

Research activities aimed at finding potential industrial uses for rice hulls have been going on for the past sixty years. Most of these efforts have attempted to take advantage of a single property of the hulls themselves (such as the fuel value or abrasive character) or of the ash formed by burning the hulls (as an absorbent or a ceramic raw material). In addition, much of the past work considered technical feasibility only, paying insufficient attention to economics. URS Research Company has completed a study for the U.S. Department of Agriculture examining the technical and economic feasibility of various utilization concepts involving more than one of the properties of the hulls (24).

The URS study showed that the most promising approaches to solution of the problem of rice hull disposal fall into two basic categories. The first category includes methods for using the heating value and the silica content of the rice hulls as elements in the manufacture of industrial products such as portland

cement, water glass, and porous silicate structural materials. The other category includes the chemical or physical bonding of rice hulls into board for architectural use. One of the most attractive approaches appears to be a manufacturing complex which converts part of the hulls into water glass which is used in the bonding of the remainder of the hulls into panel board (24).

C. Agricultural Uses

A small percentage of rice hulls are used as bedding and litter for cattle, horses, sheep, and poultry. Of these, poultry resting material accounts for the greatest fraction. The limiting factor for this use is the distribution cost of the light-weight bulky material. If used in this way, these rice hulls could have second generation potential as ruminant feed (directly or after fermentation) or as fertilizer.

As shown in Table 2, husks have about 2% protein and over 40% crude fiber. Thus, there is interest in using husks in animal feed formulations. Rice hulls at one time were thought to be dangerous and feeds containing rice or rice by-products were closely monitored to be sure they were not contaminated with hulls (23). Early feeding tests suggested that they were harmful as a feed additive and accused rice hulls as being the cause of some animal deaths. The use of rice hulls in feeds is still illegal in some countries such as France and Spain. The silica content and sharpness of rice hulls are thought to be limiting factors in feed applications.

Feeding ground rough rice to cattle, hogs, horses, and mules, in Arkansas, Louisiana, and Mississippi, became an accepted practice which pointed out that rice hulls could safely be used as

a component in feeds. Investigations by Roland and co-workers at the University of Arkansas in the early 1950's probably first established the potential value of hulls as roughage for steers and ewes (23). Now more rice hulls used in ruminant feeds than in all industrial applications.

Whole or ground rice hulls have a low nutritive value, in the range of 9-11% of dry matter digestibles (DMD). The low availability of the relatively high carbohydrate content is most likely due to interference from the considerable amounts of silica and lignin (23). It is generally agreed that rice hulls are an adequate substitute for roughage in ruminant diets as long as it does not make up greater than 15-20% of the diet. It has also been noted that the addition of rice hulls cause a longer rumination and that this aids in increasing feed efficiency and in preventing constipation and compaction (23).

The amino acid profile of rice hulls in Table 4 gives an indication of protein content of rice hulls relative to other rice by-products.

TABLE 4. AMINO ACIDS OF COMMERCIAL RICE BY-PRODUCTS OTHER THAN BRAN (g. amino acids per 16.0 g N) (25)

Amino Acid	Hulls (Calrose)	Millfeed Calif.	Millfeed Texas	Polish Present (Pearl)	Polish Lain and Rodriguez (6)	Amino Acid	Hulls (Calrose)	Millfeed Calif.	Millfeed Texas	Polish Present (Pearl)	Polish Lain and Rodriguez (6)
Lysine	3.82	4.67	4.51	4.66	4.22	Cystine	1.90	2.24	2.25	2.57	1.26
Histidine	1.22	2.35	2.36	2.70	1.50	Valine	5.69	5.89	6.10	5.57	5.40
Ammonia	3.42	2.82	2.78	1.96	1.39	Methionine	1.76	1.91	2.12	2.78	2.52
Arginine	4.30	7.35	7.35	8.19	6.87	Isoleucine	3.66	3.96	3.98	3.80	4.25
Aspartic acid	8.60	9.32	8.96	8.83	8.98	Leucine	6.47	6.85	7.04	6.58	7.86
Threonine	4.20	3.93	3.96	3.52	3.60	Tyrosine	2.16	2.72	2.80	3.39	5.74
Serine	4.65	4.84	4.84	4.10	4.61	Phenylalanine	4.40	4.58	4.60	4.18	6.39
Glutamic acid	10.42	13.09	14.02	14.00	16.38	Tryptophan	.....	.....	.....	.....	1.42
Proline	6.50	4.79	4.92	3.81	5.61	% N recovered	82.9	91.6	92.0	87.9	98.6
Glycine	5.43	4.91	5.54	5.05	4.42	% N in sample (d.b.)	0.32	1.02	0.98	1.94	1.89[a]
Alanine	6.13	6.30	6.15	5.87	5.67						

[a]On basis of crude protein = N X 6.25.

Alkali treatment of rice hulls modifies the silica and other components, thereby improving digestibility. Guggloy and co-workers, using an enzymatic digestion, showed that treatment with 400 lb. steam increased DMD of whole hulls from 11 to 18.5% and that alkali plus steam increased DMD to 34%. With ground hulls the values were raised to 22.4 and 54% respectively (26).

The ammoniation of rice hulls with anhydrous ammonia in the presence of mono-calcium phosphate at elevated temperature and pressure increases the crude protein equivalent to 10%. This treatment breaks down the silica surface, thereby softening the hulls and allowing some of the silica to be removed in a subsequent screening step. The ammoniated rice hulls have a higher feed value and can safely be fed in greater pro-

portions than the untreated rice hulls.

V. Rice Straw

The harvesting of paddy generates approximately 4 tons/ha of rice straw, and current quantities of rice straw in the major producing South-East Asian countries are shown below (9). Rice straw is usually burned.

	Rice Straw
India	140-150 x 10^6 tons/yr
Indonesia	70-80 x 10^6 tons/yr
Philippines	12-14 x 10^6 tons/yr
Thailand	50-60 x 10^6 tons/yr

Although the commercial utilization of rice straw, another by-product, seems to be very small in most rice-producing countries, it can be of some economic value if used for making mats, ropes, bags and bales, or as fertilizer or animal feed. It is used as roughage for cattle feed. The Norwegian Hochschule of Agriculutre has an ammonia treatment process that upgrades various straws for feed purposes (28). Experiments show that rice straw contains 2 to 2-1/2 times the leaf fibers contained in other cereal straws, an indication of its greater suitability for paper making. In India rice straw is used as a cattle fodder, for paper and board manufacture and as a reinforcing material in the preparation of mud plaster and mud fuska. Several mini-paper and board factories are being built. The Industrial Development Board of Sri Lanka has a project on producing cardboard from rice straw.

With progressive introduction of high-yielding varieties which give lower straw yields, the total availability may be restricted for new ventures. This has been taken into consideration while expansion of pulp and paper industry was being planned in Indonesia. For example, in Java, the straw availability in the next few years will be about one-fifth of 1973 figures. The use pattern in Indonesia is: 50 percent as cattle feed; 25 percent as soil conditioner and 25 percent available for industrial applications. At

present, there are three paper mills based on rice straw. The part of the plant which bears rice (locally called merang) is preferred because of low silica and hig cellulose content. The plant at Letjas (cap. 15,000 tpa) uses both straw and merang while those at Blabak (Central Java: cap. 7,200 tpa) and at Pedalarang (cap. 4,000 tpa) process only merang. The last unit also manufactures cigarette paper (1,500 tpa) with imported pulp (9).

In addition to the above use pattern, rice straw is used as medium for mushroom culture in the Philippines and Thailand (9). eg May Farms Liberty Flour Mills, Inc. in the Philippines.

Research is being done by Dr. F. Uyenco of the University of the Philippines, Diliman and Dr. E. del Rosario, University of the Philippines, Los Banos on producing sugars from rice straw and hulls (27). Dr. del Rosario is also doing research on producing yeast (Candida tropicalis) from acid hydrolyzates of rice straw. The harvested yeast contained 51% of protein (dry basis) whose amino acid composition compared favorably with the FAO reference protein. Though yield of Candida utilis var. thermophila and Candida tropicalis from sugar appeared adequate and their protein contents exceed 50%, the project was not feasbile, according to Prof. Paca. DeLaSalle Univ., Chem. Eng., because of the large amount of energy required to mill the straw to 200 mesh before hydrolysis. Little hydrolysis with HCl occurred at 50 mesh. Dr. Uyenco is using Trichoderma viride and the same general procedures as the work at Natick Laboratories. (28).

VI. Summary

The major rice by-products which are wasted to a large degree are rice hulls, bran, and straw. There have been scattered referrals to the environmental impact of hulls and bran, but nothing specific was uncovered in this investigation (3). Further investigation of environmental impact, particularly for wasted bran, is needed.

The small size of the mills and their dispersed location in South-East Asian countries, makes it difficult to collect residues for further utilization. Transportation to a processing site also becomes necessary, thereby increasing costs. One approach to these problems is utilization or processing of the residues in proximity to the site where generated, i.e. integrated milling-oil extraction, milling-protein isolation, or milling-

feed lot operations.

Rice hulls seem to be of the most concern as a waste since mountains of these are supposedly piled up in rice producing countries of South-East Asia. A portion of the available hulls are used for fuel and industrial purposes, and these uses should be expanded. Because of the high silica content, husks seem to have limited use for animal feed purposes. However, as described earlier, there are reported uses of hulls in animal feed formulations. Clarification of this usage is necessary because using hulls as animal feed would be a significant application.

Rice bran is currently used as animal feed or for extraction of oil. If the bran is not extracted immediately, instability due to enzymatic action can occur leading to rancidity and ultimate wastage of the bran. For example, 3.2×10^6 metric tons per year of rice bran are available in the Philippines (3). Of this 12,600 metric tons goes into production of a vitamin B-1 rich concoction (tiki-tiki), 37,900 metric tons are fed to hogs, and 11,500 tons are used elsewhere. The remainder is wasted, much of it being dumped into rivers.

Bran stabilization is therefore required, but this operation is generally practiced only at larger mills. Hence, a strong need exists for simple, efficient stabilization units for small rice mills, preferably fueled with rice hulls. The United Nations Industrial Development Organization (11) is presently engaged in the development of low-cost, low-capacity rice bran stabilizing equipment to be attached to existing small-capacity rice mills.

Good human food possibilities exist for bran in which fiber content is reduced, due to its amino acid profile (contains lysine and threonine), and vitamin B-1 and protein contents. Such usage is potentially important

in the rice growing countries of South-East Asia where diets are generally protein deficient. A process has been developed for producing a human grade protein isolate from rice bran (18), either stabilized or unstabilized, and there is interest in the Philippines to pilot this process (19). The protein extract would be intended for use in baby food formulations in the Philippines

Some potential disadvantages of protein extraction are the loss of carbohydrates and B group vitamins, and the possible denaturation of protein. Also, at best 35-40% of the original protein in the bran can be recovered. A better approach to protein deficient diets in South-East Asia might be to encourage greater dietary use of brown rice (unpolished) which still contains the bran and polish. However, this is probably culturally unacceptable because use of polished white rice is considered to be a status symbol.

REFERENCES

1. Halliday, D., Utilization of Rice Bran, Interregional Seminar on the Industrial Processing of Rice, ID/WG. 89/9, Feb. 2, 1971, Tropical Products Institute, London, United Kingdom.

2. Idrus and Kamari, "Increasing Food Production Through Better Utilization", Umaga/Faum Food Conf., 1975.

3. Fleischman, M., Steinkraus, K. H., and Meade, R., First Site Visit AIChE AID/LIFE Project, August 1976.

4. Department of Science, Ministry of Industry, Rama VI Road, Bangkok, Thailand.

5. Ma Ah Ngan, "Agro Industrial Waste Problems in Malaysia", pp. 1-7 in Proc. Agro. Ind. Wastes Symp. 1975, Rubber Res. Instit. of Malaysia, Kuala Lumpur.

6. Bhushan, Bharat, "Agricultural Residues and their Utilization in Some Countries of South and South-East Asia", Industry Sector Seminars, Residue Utilization - Management of Agricultural and Agro-Industrial Waste, FAO, Rome 18-21, January 1977.

7. Rice Bran Protein Concentrates Obtained by Wet Alkaline Extraction", Western Regional Research Laboratory, Agricultural Research Service, U.S. Department of Agriculture, Berkeley, CA 94710.

8. Schultz, Jr., E. B., "Appropriate Technology for Processing of Sugar Cane, Oilseeds, and Rice Bran: The Problems and Some Approaches to Solutions for Pakistan", Center for Development Technology, Washington University, St. Louis, MO, January 1977.

9. Agricultural Residues and their Utilization in Some Countries of South and South-East Asia. Industry Sector Seminars, Residue Utilization - Management of Agricultural and Agro-Industrial Waste, Rome, 18-21 January 1977.

10. Somaatmadja, Dardjo, "Fats and Oils Industry in Indonesia", International Development Research Center's Workshop on Fats and Oils, Salangor, Malaysia, 23-25 March 1976.

    (Dr. Dardjo Somaatmadja, Director, Chemical Research Institute, Ministry of Industry, Jalan Ir. H. Juanda 5-7, Bogor (West Java) Indonesia.)

11. W. H. Tanaka, Acting Head, Development and Transfer of Technology Section, Inter. Ctr. for Ind. Studies, United Nations Industrial Development Organization, Lerchenfelder Strasse 1, A-1070, Vienna, Austria, P.O. Box 707, A-1011. (Rice bran stabilization)

12. J. S. Balderama, "A. G. Bistoyong, J. A. Euebio, P. F. Alcantara, R. R. Gonzales. (1968) Philipp. Agric. 52, p. 146 and 287 #1.

13. B. Panda and S. M. Gupte, J. Food Sci. Technol. 2, p. 120 (1967)

14. L. Lynn in "Edible Rice Bran Foods", Protein-Enriched Cereal Foods for World Needs", M. Miller, Editor, American Assoc. of Cereal Chemist (1969).

15. Houston, D. F. and Ali Mohammed, Rice Journal (8) P. 20 #1 (1966).

16. Houston, D. F., "Recovery and Utilization of Rice Bran and Polish", League for International Food Education Newsletter, Feb. 1973.

17. Birch, G. G., Parker, K. J., Worgan, J. T., "Food From Waste", Applied Science Publishers LTD, London, United Kingdom (1976).

18. Connor, M. A., Kohler, G. O., Saunders, R. M., "Financial Assistance for Pilot-Scale Production of Rice Bran Protein Concentrate", Western Regional Research Laboratory, ARS. (Letter to Dr. Pablo, Philippine Institute of Nutrition).

19. Ignacio Pablo, Philippines, Institute of Nutrition, Philippines Women's University, Manila, Philippines. (Extraction of protein from rice bran)

20. Applied Scientific Research Corporation of Thailand, 196 Phahonyothin Road Bangkhen, Bangkok 9, Thailand.

21. A. K. G. Desai, Deputy Director, General (Food) Supply Wing, Embassy of India, Washington, DC (Personal Correspondence).

22. "Rice By-Products Utilization", International Conference, Valencia, Spain. Sept. 30 - Oct. 2, 1974.

23. "Rice Hulls", pp 319-345 in Rice: Chemistry and Technology, Source Unknown.

24. Staackman, Milton, Studies on the Technical and Economic Feasibility of New or Improved Processes for Utilizing Rice Hulls, U.S. Dept. of Agriculture, Western Research and Development Division, Contract No. 12-14-100-9571(74).

(URS Research Co., 155 Bovet Road, San Mateo, CA 94402. Phone: (415) 574-5001.)

25. Houston, D. F., Allis, M. E., Kohler, G. O., Amino Acid Composition of Rice and Rice By- roducts, Western Regional Research Laboratory, Albany, CA. Sept. 1969.

26. J. Guggoly, G. O. Kohler, and T. J. Klopfenstein, "Enymatic Evaluation of Process for Improving Agricultural Wastes for Ruminant Feeds", J. Animal Science 33:167 (1967).

27. Ernesto J. Delrosario, Assistant Professor, Department of Chemistry, University of the Philippines, College, Laguana, Philippines. (Acid hydrolysis of rice straw)

28. AIChE, AID/LIFE Project, 3rd Site Visit

SUGAR

Sugar cane is an important crop for conversion of solar energy and the production of sugar from sugar cane is a large and well-established industry throughout most of the humid tropical and sub-tropical countries of the world. Usually started by colonial interests, the industry often did, and in many cases still does, represent the largest and most dominant agro/industrial development in developing tropical nations. Sugar is the essence of a cash crop: much more is produced than can be consumed in the producing country and the considerable excess is an important export commodity factor in an often tenuous balance of trade pattern.

Much of the industry's installations are old, and process technology has remained essentially unchanged, except in scale, for the past 100 years. The economy of sugar production depends almost entirely on the world market price of the one major product: sugar. Recent, and continuing, price fluctuations have led the industry to reap enormous profits (in 1974), and to its current level of almost worldwide losses on sugar operations of any scale.

In addition to the food and feed uses of sugar and its byproducts, it is finding increasing use as a raw material for fuels and chemicals (1). Thus worldwide production of sugar is increasing, simultaneously increasing the quantity of by-products, and effluents and environmental impact of the unutilized portion of these wastes. Environmental concern about the pollution created from cane processing and alcohol production from the molasses by-product of sugar mills, has been expressed in Brazil, Thailand, the Philippines, and elsewhere (2). In Brazil the government wants alcohol to comprise 10-15% of all motor fuel used in that country. Presently, about 33% of all the alcohol produced from Brazilian molasses goes into motor

fuel but the government wants to increase the amount. The national goal is 3×10^9 liters of alcohol per year. The Brazilians are very enthusiastic over the idea and, in fact, are helping the Philippines to set up a similar program for alcohol fuel (1).

In addition to ethanol, other fuels which can be produced from sugar are methanol, methane, and various fuel gases. Ethanol from sugar can also be used as a source of ethylene, a major material in the manufacture of organic chemicals. Sucrose esters are being made in Japan and sucroglycerides in Europe from sugar. Production of ammonia from sugar has also been recommended (1).

I. Sugar Production

Sugar plays a major role in the economics of India, Brazil, other Latin American countries, India, the Philippines, and Thailand, and is a major export item in these countries. There are large quantities of by-products available and effluents in all the sugar producing countries. A good percentage of the by-products such as molasses and bagasse are wasted and there is environmental concern over these wastes and the effluents. Particular concern exists over the highly polluting still bottoms resulting from production of alcohol using molasses as a substrate.

Table 1 summarizes some of the available statistics on sugar production. Total world production of sugar in 1976/77 was 86.8×10^6 tons/year, 58% of this from sugar cane (3).

In the Ivory Coast, 1980 production of molasses is estimated at 150,000 - 200,000 tons/yr. If the present practice in Ivory Coast for molasses is continued, all of it will be wasted (4). In Brazil, there are

Table 1 (3, 4, 5, 6)

Production of Sugar

	Crop Production Metrictions x 10^{-6} (1974)	Raw Sugar Metrictions x 10^{-6}	Number of Mills
Dominican Republic		1.4 (1976/77)	
Brazil	.73	7.5 (1976/77)	
Columbia	15.6		
Guatemala	2.4		
Ecuador	3.7		
Peru	9.0		
Ivory Coast	.46 (1990)		
Panama	1.36 (1972	.03 (1972)	
Philippines		1 (1975)	40
India	140	5.5 (1975)	251
Indonesia		1.25 (1976/77). 1.62 (1982)	58
Thailand		1.8 (1976/77)	42
Malaysia		1 (1974)	

presently plans to annually convert 30 million bags of sugar and all the molasses into alcohol. In Sao Paulo already 5 million bags per year are being converted. The national goal is 3 billion liters of alcohol annually. Thus a large quantity of still bottoms is and will be generated, thereby aggravating an already adverse environmental impact.

In Thailand, milling capacity has grown with cane output, which is expanding significantly (6). Thus, we can expect to see increasing concern over sugar wastes in Thailand. Opposed to other countries where the mills are generally centralized on the larger sugar plantations, the sugar mills which are located close together in Thailand are sometimes at a great distance from the farms (7). This has a negative effect on use of some of the wastes generated at the mill, e.g. irrigation of the farms with aqueous effluent and stillage.

II. Sugar Processing

The production of centrifugal cane sugar from sugar cane results in several by-products and wastes. The cane is first cut in the field and piled in windrows, which are burned to remove the leaves and leafy tops from the stalks. The stalks are transported to the mill where they may be washed, then chopped and fed into a train of extraction rolls where the juice is expressed. The fibrous roughage or bagasse exiting the mill-rolls is transported either to the mill furnaces to be burned for steam production or to a storage yard. The raw cane juice is clarified by a lime treatment followed by filtration. The solids left on the filter are called filter mud or cachassa. The clarified juice is then concentrated and crystallized. The sugar crystals are removed from the mother liquid by centrifugation. The sugar at this stage is termed raw sugar. The remaining mother liquor

is called final molasses. If the sugar is to be refined into white or table sugar it is redissolved and re-crystallized in the sugar refinery (7).

The flow chart shown in Figure 1 identifies the major processes in the production of raw cane sugar, and the major by-products, bagasse, filter mud, and molasses (4). Cane wash water and sometimes condensate produce a liquid effluent of high BOD. The chart also shows that molasses (and, in some cases, clarified cane juice) may be fermented anaerobically to produce ethyl alcohol thus producing another waste: stillage (aqueous bottoms, from the still). Overall material balance figures shown on the chart allow the calculation of the amount of the various by-products generated in the countries of interest.

Figure 1 (4)

Production of Centrifugal Cane Sugar

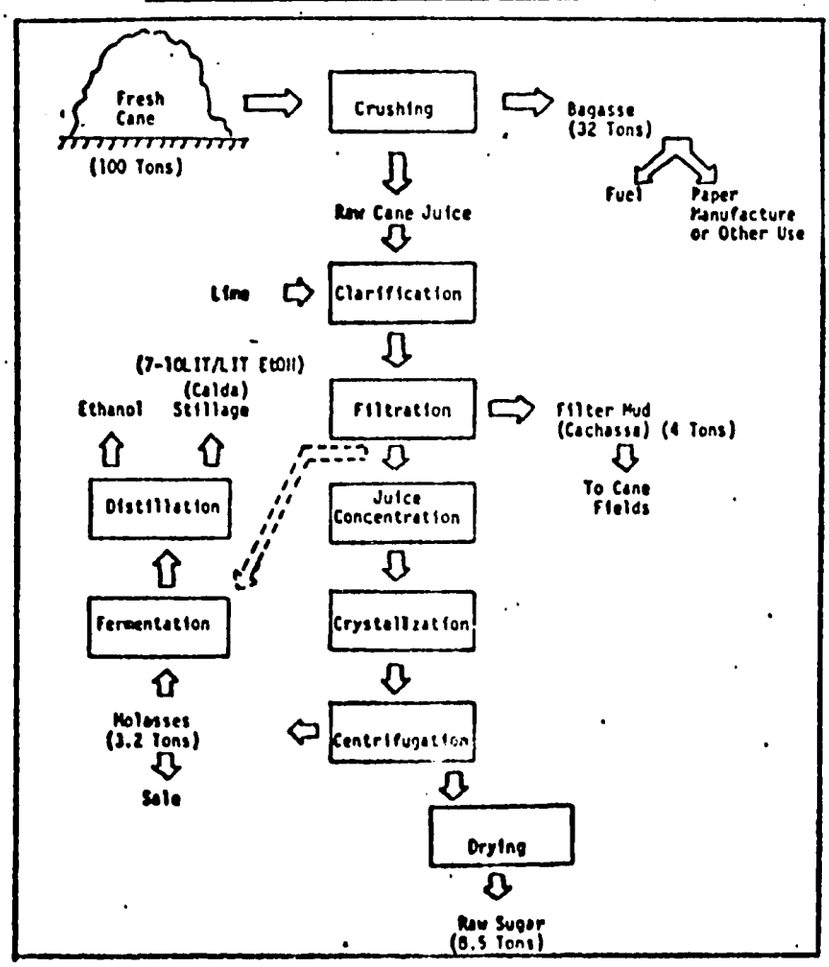

It should be noted that the chart shown is for a typical mill producing raw sugar (with a grinding capacity of from 1000-7000 tons of cane per day). Smaller mills (10-100 tons cane/day) producing panela (a crude sugar crystallized into a cake form) are less efficient in the clarification step and produce a cachassa much richer in carbohydrates. Molasses is produced at all mills producing centrifugal sugar and has a number of existing markets and applications in the animal feed, pharmaceutical, acid fermentation, and alcohol production industries. The value is dependent upon the market price of sugar and the availability of transportation to shipping or use points. Molasses, cachasa, and the other by-products are discussed in separate sections.

III. Sugar Cane Factory Wastewaters

Water pollution problems arise not only from stillage, but also from both cane and beet industries through the incorporation of carbohydrates from various stages in process water. The level of pollution is higher for the beet sugar industry than for the cane sugar industry. Abatement of these problems is required at a plant engineering level. A recommendation was made recently that special training courses should be organized on water pollution control techniques for plant engineers in the cane and beet sugar industries (2).

There is environmental awareness of and government concern over sugar mill effluents in Thailand, the Philippines (8), and Brazil (4). Dr. Phrom Panichpakdi of the National Environmental Board indicated that pollution from sugar mills has the highest environmental priority in Thailand. The sugar mills are located close to several rivers in sizable groups and together produce large amounts of liquid effluent as well as air

pollutants. Mill owners complain that the Government is forcing the industry to pay the full cost of pollution control instead of financing cleanup efforts from land revenues (6). For example, there are 18 sugar mills in a 2 km span, each with capacities of 5000 to 8000 tons/day, and each discharging their effluents into the Mekong River. Joint treatment on waste utilization would be a possibility in a situation such as this. The Agricultural Attache at the U.S. Embassy in Thailand (9) stated in a letter that the liquid wastes, which are almost free of sugars, are put into sediment tanks where they are aerated. The liquid is then released into the rivers and streams, while the disposition of the sediment from the tanks has not been reported on. With regard to the Philippines, one report indicates that "the wastes from ten sugar mills on Negros Island are not utilized for any purpose and are in fact thrown out to the sea. In some places, the pollution due to the sugar effluents in combination with those from pulp and paper mills has already reduced the diversity of marine life and has been suspected to severely affect the fish production of bays". The specific type of wastes, e.g. washwater, excess molasses, etc. involved here was not specified. One contact indicated an almost total lack of research on the utilization of the wastes of sugar cane in the Philippines. There are some studies on the effects of sugar mill and paper pulp effluents on the environment on Negros Island being done by the Environmental Center in Silliman University, Damaguete City (8).

Brazil was somewhat unique to the countries visited in Latin America by the second team in that it has a deeper sense of pollution awareness and even some governmental agencies whose main concern is pollution, e.g. Companhia Estudual de Tecnologia de Saneamento Basico e de Defasa do Meio Ambiente Superintendencia de Treinamento (CETESB). Since sugar plays a major role in Brazilian economics and now more recently in their energy programs, there

is a major concern about the pollution created from cane processing and alcohol production. This concern was expressed by everyone talked to within Brazil.

Sugar industry wastewaters are characterized by large volumes of a seasonal nature. High daily BOD loadings are common in many cases due to poor housekeeping and factory management. Where treatment of any kind is practiced, bioxidation in ponds is the most common method. Effluent can be used directly to irrigate farms, which is an important use since cane sugar grows during the dry season. Another potential effluent usage, possibly after dilution or some treatment, is algae ponds and fish ponds (8).

Some description of the wastewaters and their treatment will now be given.

A) Wastewaters

Table 2 shows the various waste waters from a sugar cane factory and Table 3 shows the composition of cane wash water. Where cane washing is practiced it is the primary source of pollution. The large volumes of water required for washing become contaminated with suspended soil, dissolved organic and inorganic material, and insoluble plant material. Most of the soluble material is sugar, producing BOD_5 values ranging from 300-1000 ppm (10).

Table 2 (11)

SUGAR CANE FACTORY EFFLUENTS
2,400 tonnes cane daily caparity

Effluent	Average flow rate gall/min.	Average BOD 5 ppm	Total daily load (BOD) lbs
Cane Wash Water	1,000	680	8,157
Floor Washing & Boiler blowdown	100	378	453
Excess Condensate	50	10	6
Condenser Water (once used)	5,000	69	4,138

Average daily BOD load per tonne daily capacity = 5.31

Table 3 (11)

COMPOSITION OF CANE WASH WATER

Total Solids	2,800 ppm
Suspended Solids	2,104 ppm
Settleable Solids	1,722 ppm

Condensate is used for cane washing, however under normal conditions there is more than enough condensate to meet processing requirements and the excess is wasted. This condensate can become contaminated with entrained solids which yield an average BOD_5 of 70 ppm, though it can be as high as 500 ppm (10). Dr. Phrom of the National Environmental Board of Thailand (8) says that in Thai mills bagasse is picked up by the condensate and later ferments. This problem should not occur however, if the condensers are properly equipped with entrainment separators.

B) Treatment of Sugar Effluents

The best method for controlling effluents in the sugar industry is to practice water economy. In plant control measures to minimize the intake of water by sweet water recovery and condensate reuse are usually considerably cheaper than end-of-process treatment. Correct factory practice, good housekeeping, and proper equipment maintenance can often reduce effluent problems considerably. The principle methods used for the treatment of sugar factory effluents are shown in Table 4.

Table 4 (10)

METHODS AVAILABLE FOR TREATMENT OF SUGAR FACTORY EFFLUENTS

1.	Removal of Solids	– Settlement, – Sedimentation – Filtration
2.	Irrigation	
3.	Biological Purification	– Lagooning – Biological Filters – Activated Sludge

The effluent from the washing operation is pumped to a settling basin and then biologically treated. In areas where land is scarce, mechanical settlers are used. Advantages over settling ponds are less space needed, low retention times, and the mud does not become stagnant which reduces the risk of fermentation in the tank. However, this equipment is quite expensive. Many different flocculating agents are used to accelerate settling, lime being the most popular because it maintains a sufficiently high pH to prevent corrosion and reduce the risk of anaerobic fermentation.

Biological oxidation, which occurs in three stages, is usually done in lagoons. The first stage is anaerobic fermentation of the carbohydrates in which pH becomes more acidic, pronounced foam formation occurs and there ar distinct butyric acid odors. In tropical areas this stage only takes a few days. In the second stage, also anaerobic, most of the nitrogenous material is broken down. The pH becomes slightly alkaline, hydrogen sulphide is formed along with other sulphides, and the water darkens. During the third stage, anaerobiosis changes slowly to cerobiosis. Aerobic fermentation starts and the lagoon is gradually re-oxygenated. Algae growths begin to appear and the BOD_5 falls from about 100 ppm to 10-15 ppm.

Natural purification is a relatively low cost method of treating these sweet effluents. The main disadvantages are the land requirements for ponds needing large surface areas and the odors given off during the anaerobic stages.

The algae which grows on the wastewater can either be harvested for animal feed or used for fish ponds. About 140 ppm BOD_5 is the optimum value for algae growth. However, according to Dr. Pescod of the Asian Institute of Technology in Thailand (8) claims that the costs are high, the

system too complex for rural agro-industry and marketing would be a problem. Feed producers are used to handling and using fishmeal, but not algae.

Using the algae grown in the remaining sugar effluent to feed fish in adjacent ponds or using the remaining wastewater directly in fish ponds is a possibility. A previous AID report (David D. Gaumer, 11/12/71) cited an eight pound fish grown on garbage collected from Bangkok hotels in a period of less than six months. Carp and catfish have been grown in Nepal on food processing wastes. Direct use of algae grown on wastes for fis feeding in adjacent ponds avoids the costs of algae harvesting. Final effluent after the fish pond should have a BOD of about 20 ppm (Pescod, AIT). With respect to rural agro-industry, this can be a profitable way to use food production wastes. Fish are highly nutritious and since fish are not a new product, it would be acceptable to local people, thereby eliminating marketing problems. Transportation problems should also be minimized since consumption can be at a local level. Fish ponds are also simple and local capability to operate them is available.

IV. Molasses

Molasses is produced at all mills producing centrifugal sugar (4) at an approximate yield of 20-25 liters of molasses per ton of cane. Some production figures for molasses in tons per year are: Thailand - 665,000 (8), Kenya - 50,000 (12), and Ivory Coast - 150,000 to 200,000 by 1980 (4).

There are a number of existing internal and export markets and applications for molasses in the animal feed, pharmaceutical, citric acid, and alcohol production industries. The current (October 1976) world market price for the molasses is 3.4 cents per pound (50-60% total sugar) (4). The value of molasses in a sugar producing country is dependent upon the

market price of sugar and the availability of transportation to shipping or use points and the present use of molasses is thus limited.

In one significant situation, the interior of the Ivory Coast, it was found that molasses was still being used to settle dust on roads. As long as world market prices for molasses remain at or near current levels this molasses should continue to be available for some alternative nutritional use (4), and a further discussion of this situation will be given later. In Kenya the total production of 50,000 tons per year is dumped because of high shipping costs (12). Most of the molasses produced in Ghana and several African countries is also dumped (12). Molasses is used to produce a gin in African villages and the still bottoms are dumped. The Kenyan government has now made this gin production illegal.

Full scale integrated chemical and fermentation plants using molasses as a feedstock or substrate are in operation in certain countries where the politico-economic situation is appropriate (2). Though there are many possible uses for molasses, in developing countries there may be little current economic incentive for use due to the relatively higher profits from sugar. Thus there is a surplus of molasses in Thailand and the Philippines, and some of the surplus is dumped into waterways in the Philippines when storage space is short (8). At a recent UNEP/FAO seminar (2), concern over molasses wastage was expressed and the following recommendations were made:

- Countries should investigate the "local" use of molasses in the production of secondary products;
- Encourage investigation into greater recovery of sugar from molasses, including the study of the feasibility of the use of flocculants to improve recovery.

A major environmental impact occurs from the dumping in waterways of still bottoms from the manufacture of alcohol using molasses. For example,

Japan used to import large quantities of molasses from the Philippines for the production of alcohol. Now, however, they are importing only ethanol, thereby forcing more of the molasses to be fermented in the Philippine distilleries. Distillery slops with BOD ranging from 20,000 - 30,000 mg/l are a waste from these distilleries. In some of those distilleries which are tied up with a sugar mill and plantation, the slops are used as soil conditioner. However, very few distilleries reportedly thus use the slops and they are generally dumped into the ocean. Even with those distilleries which use the slops for irrigation, runoff is a problem. Concern over this environmental problem has been expressed in Thailand (8), Brazil (4), and elsewhere (2). This situation is covered in greater detail in a separate section.

Animal Feed Applications

Increased use of molasses for animal feed would be a viable option for some of the wastage. In Panama (7), some of the molasses from one sugar mill is mixed with urea, other minerals, and vitamins and marketed at 6-7¢/lb. as an animal feed supplement called Malavit. Molasses not used for Malavit is exported. Another company in Panama operates a large (1,000 head) dairy close to the mill which supplies most of the fresh milk in Panama City. Some of the mill's molasses is used as feed at the dairy; the rest is sold domestically or exported.

Molasses is used as animal feed in Zambia, Kenya, the Philippines (12), and in Malaysia molasses will be mixed with pineapple wastes and exported to Japan as animal feed (8). Excess sugar cane bagasse has been considered as an absorbent or carrier for molasses and additional minerals and vitamins in a pelletized ruminant feed. The UNEP/FAO seminar (4) recommended that further testing should be undertaken on animal feeding systems using high rates of molasses in the feed. Successful application would increase molasses usage.

Molasses is a suitable substrate for growing yeast cells, which as

SCP can be used in animal feeds. ASRCT (13) and Dr. Amara (14), both in Thailand, are doing laboratory studies on producing SCP from molasses. ASCRT has made a 45% protein product. PHILSUGIN (15), Philippines, has expressed interest in a SCP-molasses fermentation pilot plant and Kenya has expressed interest in molasses fermentation (12). Molasses fermentation is discussed later in more detail with respect to the wastage in the Ivory Coast.

A recent paper (16) on producing yeast from molasses stated that "the chemical composition and physical properties of molasses vary, depending on agronomic factors, weather conditions during the growth of the sugar beets, storage of their roots before the slicing, and most of all on manufacturing processes applied in the sugar industry. Different samples of molasses produced in the same sugar factory and in the same campaigns can have different chemical compositions. Molasses have both harmful and advantageous properties and components for the growth of yeast. Numerous investigations have proved that molasses from the first part of the campaigns were better raw material than those from the second. Some authors have confirmed that in the last twenty years molasses have become worse as a raw material for yeast. Nevertheless molasses are still a major raw material for the production of baker's and feed yeast."

Yeast manufacturing processes have also undergone continuous changes. Present-day development of the methods of yeast production depends on improvement of the preparation of molasses, its clarification, the feeding of yeast, application of continuous processes instead of batch ones, modernization of the aeration system of mash, and the separation and filtration of yeast. All these procedures allow yields of baker's and feed yeast to be increased from 10% to 40% in comparison with the classic processes. Par-

ticularly important is the selection of a proper strain of yeast that is capable of taking advantage of the constituents other than sugars from molasses mash during the manufacturing processes.

These and other problems are very important for production of baker's and food yeast from molasses."

The rapid development of fermentation technology will have an impact on the economics of utilization of both molasses and cane juice. Currently, molasses is the preferred substrate for bakers' yeast production and the present trend is the use of full-strength molasses as feedstock (16). Other products made from fermentation of molasses are monosodium glutamate and citric acid. MSG is manufactured in the Philippines, but citric acid is currently imported. At the UNEP/FAO seminar (2), it was pointed out that "Citric acid may be produced from sugar by-products, but with the current world capacity for citric acid production, further development of capacity, except for local internal markets, should be approached with caution." Dr. Salome del Rosario (17) is seeking funds for a citric acid pilot plant in the Philippines.

Dr. Solon of the National Nutrition Council, Philippines (18), has expressed interest in molasses as a porridge adjunct for babies. This use might require sterilization. ASCRT (Thailand) (13) is doing laboratory studies on production of potash from cane molasses for fertilizer applications. The UNEP/FAO seminar (2) pointed out that the present potential of molasses for the production of microbial polysaccharide is recognized as being low. Glucose and sucrose are preferred feedstocks from a technical point of view.

V. Molasses Stillage

The most important new factor affecting the sugar industry has been

the price increase in petroleum products. The increases have caused chaotic reverses in the balances of trade of developing nations - many of them without petroleum reserves of their own. Many of these impacted nations are in the humid tropics and most of those are major sugar producers. These nations are becoming increasingly interested in obtaining relief from some portion of their oil imports by developing fuel production capacity based on indigenous products. In most cases this has meant the production of ethyl alcohol by anaerobic fermentation of cane molasses and even raw cane juice (4). Although the cost of fermentation alcohol is generally higher than chemically (C_2H_4) derived alcohol, it should be noted that the overall economy of a country might be served by a controlled ethanol market (2). Brazil is a case in point and will be discussed separately.

The still bottoms (slops, stillage, calda, vinersse) resulting from the production of alcohol using molasses as a substrate, is the sugar industry waste of greatest environmental concern. It is a major problem in the Philippines (8), Brazil (4), and elsewhere (2). For every liter of ethanol condensed from the alcohol still of a producing mill, 10 liters of acidic aqueous still bottoms (stillage or calda) are produced. This material is foul smelling, contains 6% solids (much of which are pentosans and hexoses unfermented in the anaerobic, Saccharomyces fermentation), protein and ash. The BOD_5 is also very high (50,000-60,000 ppm) and composition of stillage is shown in Tables 5 and 6. Technology for treatment exists; however in many cases, e.g. Brazil, the waste is dumped into waterways with inadequate or no prior treatment.

The residues have a relatively high mineral content and high BOD which makes further utilization difficult. No satisfactory economical and

TABLE 5

Molasses Stillage Composition (5, 19, 24)

Component	Concentration (mg/l unless otherwise noted)
pH	4.3 - 4.5
Soluble COD	67,100 - 75,700
Total COD	71,000 - 100,000
Soluble BOD_5 20°C	17,000 - 40,000
Total BOD_5	50,000 - 60,000
Solids	
Total	70,200 - 95,800
· total fixed	19,400 - 22,200
· total volatile	50,700 - 73,600
Total dissolved	77,400 - 85,600
· fixed dissolved	17,900 - 21,500
· volatile dissolved	45,600 - 64,000
Total suspended	2,540 - 10,280
· fixed suspended	40 - 1,720
· volatile suspended	2,500 - 9,620
Alkalinity (as $CaCO_3$)	806 - 1,320
Volatile Acids (as HAc)	3,610 - 5,920
Nitrogen (as N)	
· total Kjehldahl	790 - 1,450
· organic	770 - 1,280
Protein (biuret)	340 - 570
Total Orthophosphate (mg/l as PO_4)	59 - 98
Reducing Sugars	660 - 950
CHO	1,150 - 2,400
Ash	3 - 5%
K_2O	37% of ash
Color	100,000 units
Temperature	80 - 90°C
Glycerol	1,580 - 2,620
Gums	80 - 1,000
Fibers	30 - 50
Fats	0.00 - 120
Waxes	10 - 30
SiO_2	5 9
Iodine	Traces

"The principal factors associated with the magnitude and variation of these characteristics are: the variable sugar and ash contents of the molasses, which itself is a by-product of sugar production; and the amount of acidification (H_2SO_4) of the molasses-water mixture to obtain an optimal pH level for the fermentation. The slop is rich in nutrient materials having value as cattle feed extenders and soil supplements. From a biological treatment perspective, the slops stream typically contains a deficiency of nitrogen and phosphorus, and most of the volatile suspended solids component of the slops stream is derived from the yeast crop produced in the fermentation. The organic content of the slops (70 to 100 gm/l COD) is well in excess of the point where the oxygen demand in an aerobic system exceeds economically attainable rates of oxygen transfer" (24).

TABLE 6

Ionic Composition of Slops (24)

(Units of mg/l)

Constituent	Range
Zn	2.38 - 19.93
Cd	0.09 - 0.32
Pb	0.77 - 1.60
Fe	42.0 - 150.0
Na	209. - 523.
Cu	2.0 - 124.
Co	0.19 - 0.76
Mn	2.38 - 15.6
Ca	1,850. - 2,476.
Mg	391. - 1,728.
Cr	0.25 - 0.33
K	4,011. - 4,845.
Al	0.10 - 0.58
Cl	1,330. - 4,400
SO_4	3,500. - 4,800.

commercial use of the end product has been found, and there is very little current research work in this particular field anywhere in the world. With the expansion of sugar production and concentration of industry, the problem related to spent molasses liquor has become more acute. The problem for developing countries appears to be one of usability of spent molasses liquor whereas for developed countries the question is primarily associated with the prevention of serious pollution. Private and governmental institutions should be strongly encouraged to set up pilot plant studies to develop low cost, economically viable technologies, for the use of spent molasses liquor and satisfactory means of disposal (2).

A. Treatment

Some applications of untreated stillage exist. Irrigation of the sugar crop fields with stillage returns some of the mineral and organic nutrients. This is done at the Don Q. Rum distillery on the South coast of Puerto Rico (20) and in Southeastern Brazil (19). In Indonesia these effluents along with sugar factory streams are led to paddy fields where they have increased the yield of rice (5).

Alcohol producers in India make a practice of recycling the stillage back to the fermenter as make-up water about 9 times prior to disposal. This decreases the volume of the stillage by almost an order of magnitude, but gives a much more concentrated waste (4). The high mineral content of this material renders it rather unsatisfactory for direct use as an animal feed, and quite unacceptable to pigs, but it does find some limited use in some countries, mixed with wheat chaff and other cereal residues as a feed for dairy cattle (27).

Incineration and deep well disposal have been considered for direct disposal (22). However the hygroscopicity and viscosity of the stillage

makes incineration difficult and deep well disposal is only a temporary solution.

The distillery spent wash must be treated before discharge to waterways. Some technology for processing, such as evaporation, anaerobic fermentation, yeast and protein separation, and desalination is available (21). Simple methods which have been used are (5)

- Evaporation for recovery of potassium salts
- Sand filtration
- Solar evaporation in India in open shallow pits yielding a dry cake sold as fertilizer
- Anaerobic lagooning which yields a rich fertilizer (12)

V A-1. Fermentation to SCP

Stillage contains about 7-10% of the original molasses sugars and hence is slightly fermentable. Some supplemental sugar is probably necessary (20). Taiwan currently uses the stillage as a feed stream for an aerobic fermentation to produce Canadida sp. of yeast for animal feed use. The carbohydrate content of the stillage is significantly reduced during the fermentation, but the volume of the waste remains essentially unchanged and the effluent stream from the aerobic system is still quite polluting (4).

Centro De Technologia Promon, Brazil (19) recommends a fungal aerobic fermentation to produce a protein for local animal feed usage. Easier recovery of product and prices more competitive with soy protein concentrate are claimed to be advantages over the torulautilis fermentation. Denver Research Institute and ICAITI in Guatemala are jointly studying the growth of fungi for animal feed on spent wash from a rum distillery using aseptic and non-aseptic fermentations (23). Fungi Imperfecti, Pacciloymyers clegans, Aspergillus oryzae, Myrothecium verrucuria, and Trichoderma viride are being evaluated.

Aerobic fermentation of stillage with Candida utilis has been investigated by Optima Scientic (Philippines). This process removes half the pentoses

and half the BOD. Vogelbusch of Germany apparently has an airlift system for aerating and agitating the stillage, by which the fermentation proceeds with a less offensive odor. The fodder yeast that results can be used for animal feed.

Dr. DelRosario, Department of Food Science and Technology, University of the Philippines, Los Banos, is interested in single cell protein (12). He thought that stillage from molasses fermentation to alcohol would be a likely substrate and should present no serious problems in producing single cell protein. Coconut water is too dilute to be of much value as a substrate, though when fortified with banana pulp it might be a possible substrate. If the bananas are well ripened before fermenting, most of the starch is converted to sugar and is readily fermentable.

V A-2. Anaerobic Treatment

Anaerobic units are known to generate methane (73%), carbon dioxide (25%), and other gases like hydrogen sulphide (2-3%) at the rate of 8 ft^3/lb of organic matter. In this manner, BOD is reduced by 90% to a level of 2,500-3,500 ppm. On the average, the volume of gas generated is 20 times the volume of the spent wash (5), and anaerobic fermentation can provide 15 to 40% of a distillery's heat requirements (19). The discharge from the anaerobic units can be sent to oxidation ponds where BOD level of effluents can be further reduced to 100 ppm. Bacardi Rum in Puerto Rico did an Environmental Protection Agency sponsored pilot study on anaerobic treatment of rum distillery slops (24). The objectives of the study were to develop an anaerobic digestion process for the treatment of the slops stream at the pilot scale, and to establish design criteria for the full-scale application of the process. Both bench and pilot-scale experimental studies were conducted with the anaerobic contact process flow sheet (incorporating biomass recycle) to permit determination of the Monod kinetic constants and the kinetic relationships describing the anaerobic treatment of the slops.

The process kinetics were used to examine the operating and performance characteristics of a plant-scale application (predicted effluent quality, mixed liquor volatile suspended solids concentrations, methane production rates, etc.). A process flow sheet was established and design criteria developed as the basis for estimating the cost of a plant-scale installation. The process kinetic relationships and the economic analysis were used to structure a cost-performance relationship to examine tradeoffs between cost, performance, and selected design variables.

The results of the above indicate the feasibility of the anaerobic contact process for treatment of rum distillery slops as follows:

1) Capability to produce an effluent containing less than 30 gm/l of COD at solids retention times greater than 40 days, in the treatment of a slops stream containing from 70 to 100 gm/l of COD.
2) Range of total annual costs (including amortized, operating, and maintenance costs) varying from $3.74 per cu m treated at a design capacity of 190 cu m/day ($14.18 per 1,000 gallons at 50,000 gpd) to $2.13 per cu m treated at a design capacity of 1,140 cu m/day ($8.07 per 1,000 gallons at 300,000 gpd).
3) The recovery of methane as an energy by-product of anaerobic contact treatment of rum distillery slops can, at current energy costs, reduce the above unit treatment costs by one-third at the 190 cu m/day (300,000 gpd) capacity.

Additional treatment of the effluents of the anaerobic contact process will be required to attain effluent quality levels currently defined as BPTCTCA (best practicable control technology currently available) by the Environmental Protection Agency (U.S.A.).

V A-3. Evaporation

"Concentration of still bottoms is required in order to reduce the bulk

of the material and to bring it into a form suitable for utilization. The major incentive to treat such molasses spent washes continues to be the environmental problem, as, to date, few satisfactory uses have been established for the concentrate, and it is difficult to dispose of it at a price commensurate with the cost of producing it. The basic process involved is one of evaporation, but due to the high mineral content of this material, and in particular to its calcium content, careful attention is needed to the design and selection of evaporators to deal with it. Scaling of the heat transfer surfaces in such plant is always likely to be a problem, particularly where the molasses originates from cane sugar. Traditionally, evaporators to deal with calcuim bearing materials have been of the forced circulation type and there are a number of installations in operation in several countries of the world where scaling is kept to a minimum by the use of forced circulation. However such plant tends to be expensive both in first cost, and in operating cost due to the high energy use for pumping, and there has been considerable incentive to develop evaporation systems for this material, utilizing film evaporators, One such installation in the U.S.A., concentrates the spent wash to 25% total solids in a recirculatory falling film evaporator with the remaining concentration to 70% total solids carried out in the more traditional forced circulation type. In this particular case the film evaporator is operated on the mechanical vapour recompression cycle giving great economy in the use of energy. The scaling of the heat transfer surfaces is kept under control by the low temperature differences across them, and by regular acid washing of the evaporator" (21).

The concentrate may be used as a fertilizer to recover organic and mineral values (19) or as an animal feed. The concentrated still bottoms from citric acid manufacture in the United States is used as animal feed supplement (20). Because it is high in minerals, the concentrate is limited to 10% (wt) of the feed. The condensed molasses soluables (CMS) from multiple effect evapration at a Bacardi Rum distillery in Malaga, Spain are also used as animal feed

(22).

Bacardi Rum is starting a pilot study to evaporate and use molasses still bottoms as animal feed (22). Mechanical vapor recompression evaporation will yield a condensate which will go to aerobic treatment and 30 tons/day of CMS. The CMS containing 10-15% solids will be tested as ruminant and poultry feed at the University of Florida in Gainesville. Direct feeding, feeding of bagasse - CMS pellets, and urea-CMS mixes will be evaluated. The urea is being added to the CMS as a nitrogen source for production of animal protein. Bagasse pelleting is being tested because non-rummants take solids better. This application also provides a usage for wasted local fibrous materials. Dr. Dorion of Bacardi has also expressed interest on the possibilities of pelleting CMS with rice hulls in sugar producing countries where rice hulls are a waste problem.

"The high costs of fuel makes evaporation an expensive process. However, use of wasted local fibrous materials such as excess bagasse and rice hulls might serve as fuel."

"The concentrate may also be incinerated to produce a dry mineral material which is useful as a fertilizer, and various other minor uses have been reported such as use as a binder in the pelleting of compounded animal feeds. There is however much of this material available and the concentration and recovery of it is at present restricted by the absence of a good outlet for the product at a price which makes its recovery economically viable" (21). However, governmental environmental constraints may make utilization more economical and viable.

B. Philippines

Japan used to import large quantities of molasses from the Philippines for alcohol production. Now however, they import only ethanol, thereby forcing more of the molasses to be fermented in Philippine distilleries. Thus a major environmental problem was created in the Philippines. Annual production of alcohol (95%) in the country is in the order of 65 M liters and total distillery

capacity is 420,000 liters/day of 95% alcohol. There are 19 alcohol distilleries scattered all over the country. Eleven are attached and are owned-operated by sugar mills (15).

The composition of the distillery slops in the Philippines is given in Table 6. The most common treatment of the slops is by lagooning, with or without aeration and treatment by flocculating. In distilleries owned by sugar mills, the treated water is used for irrigation. Effluent from the other distilleries is dumped into the ocean. Runoff is said to be a problem with those distilleries which use the effluent for irrigation. This problem can be solved by diking to collect runoff, following by redistribution of the collected runoff (20).

"Even when stillage is used for irrigation, bad odors result from decomposition.

Table 6

Composition of Distillery Slops in the Philippines

Distillery Slops Analysis	Range
pH	4.2 - 4.5
Suspended Solids	About 10,000
Dissolved Solids	52,000 - 71,233
Total Solids	62,120 - 71,273
Chlorides	2,830
Turbidity Units	5,720
BOD (5-day)	19,100 - 28,700
BOD (20-day)	45,000
Protein	1%

(units on other parameters are mg/l)

One distillery in the Philippines treats the stillage by anaerobic fermentation followed by aerobic fermentation (12). Flocculation with lime

and alum follows, then filtration and further aerobic fermentation of the filtrate, which then goes to rice paddies. In another case the stillage after aerobic treatment and coagulation is used to grow water cabbage and fish (12).

Studies are being conducted to eliminate the use of expensive flocculants. Studies are also being conducted on the use of CH_4 fermentation for treating slops. One plant has installed methane reactors, two in series, each of 500,000 liter-capacity (15). Little work on waste utilization is being done in the Philippines. However, PHILSUGIN (15) has expressed interest in pilot studies on production of SCP from molasses distillery slops.

"Details of processing and stillage treatment for a particular plant visited by the 3rd AICHE AID/LIFE team are given in an appendix. In this plant fish and a high protein plant was grown using untreated stillage as a nutrient."

C, Brazil (4, 19, 25)

Brazil has announced - and is embarked upon - a national policy to replace 20% of her petroleum imports by the early 1980's with ethanol produced by fermenting indigenous sugar cane products. All other cane-producing nations with similar economic problems are intensely interested in the fate of this policy.

Brazil produced about 80 million tons of raw sugar in 1974. This means that about 30 million tons of final molasses was produced as a by-product. The Brazilian government supports the price of ethanol to promote its manufacture, and to insure a steady source of alcohol, and several mills currently ferment whole cane juice with no sugar production at all. Almost every sugar mill in Brazil has fermentation capacity for alcohol production on the mill site and 700,000 cubic meters (187 million gallons) of ethanol were produced by fermentation. Yet this quantity only reduces 4% of the total petroleum imports. With this large standing capacity it is worth noting that Brazil must more than

triple its cane production and fermentation capacity to accomplish its stated goal. Cane producers are, in fact, convinced that they can accomplish this with little difficulty maintaining that as much cane can be produced as there is a market for. They are probably correct.

Sugar producers maintain that their break-even point for sugar is around 10-11¢/lb. Current world market price has been below this level for almost 6 months. The market price for ethanol is about 17.5¢/lb. at the present time. A look at the material balance chart below will explain the Brazilian processing scheme of selling raw sugar and fermenting molasses to ethanol. However, no matter which path is chosen through the chart - they still lose money.

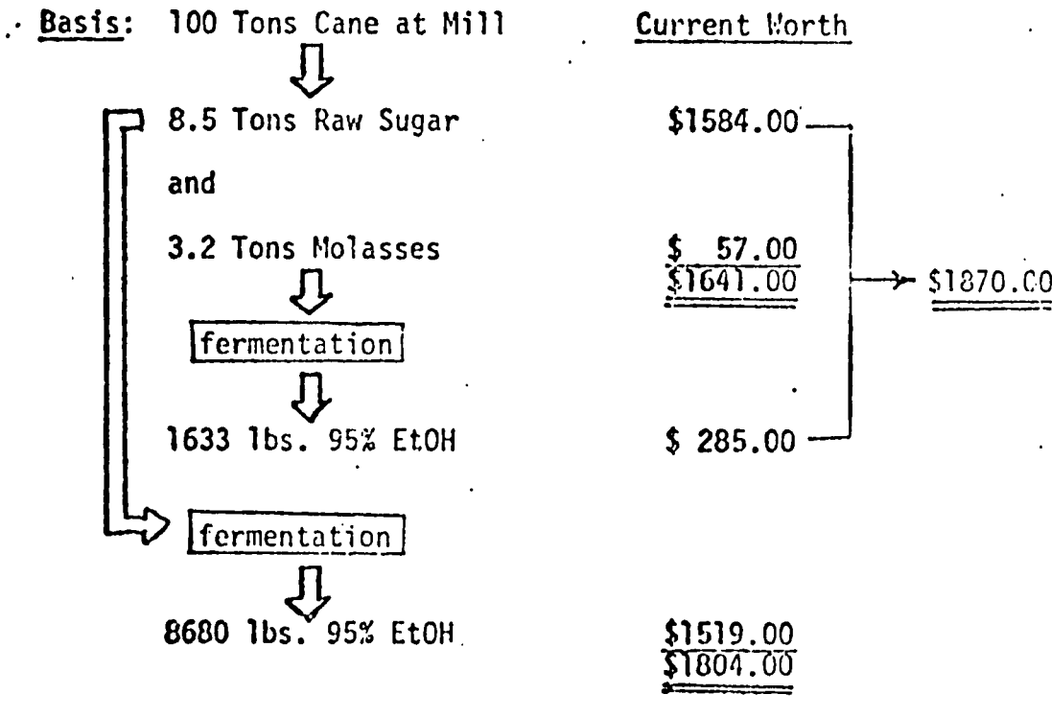

Under the current national plan, 8 x 10^6 cubic meters of stillage waste is produced per year. Current practise is to dump the waste into a river. Unfortunately, the Brazilian dry season corresponds with the sugar harvest so rivers at low flow levels receive the wastes when they can dilute

it the least. It is now a severe environmental problem, and there is much concern with the growing amount of calda which as of now seems to be useless. The problem must be solved before the industry expands by 300%. Protein recovery prior to stilling the mash is one possible use, but the yeast level is probably too low (20). A second possibility, using the stillage as fertilizer, was considered and found to be too costly as transportation costs were very high. A third possibility is filtration and reuse of the filtered stillage to dilute the molasses prior to fermentation. The filter cake might make a fairly good swine food (4).

In addition to the problems in Brazil from molasses stillage, there will also be stillage from producing alcohol from sugar cane juice and cassava. The following stillage treatment scenario has been proposed (19):

. Molasses stillage for direct fertilizer use and treatment by evaporation

. Stillage from sugar cane juice for methane production and fungal biomass

. Cassava stillage - secondary and as yet undefined treatment.

VI. Bagasse

Generally about 85% of the bagasse (fibrous roughage) from sugar cane is used as fuel to produce steam for the mills. If a mill produced only raw sugar it would use about 15 tons bagasse/100 tons cane plus about 40 gal. diesel fuel or bunker fuel oil as fuel for the boilers. If the mill also operated a sugar refinery it would burn all of the bagasse plus about 170 gal. of supplementary fuel oil per 100 tons of cane (7). In Indonesia, about 7-9% of the total bagasse is also consumed by locomotives. Due to the shortage of energy resources, the present use pattern is unlikely to change (5).

After fuel usage there is usually a surplus of bagasse, and this is being used for the manufacture of paper, fibre boards, furfural, in animal feed compositions, and as soil conditioner (Philippines). The physical and [illegible] of bagasse vary according to the cane used, and the

type of equipment used in expelling juice. Bagasse usually has 50% moisture, 30% fiber, and 20% pith. The pith can continue to be used as a fuel while the depithed bagasse can be used for the manufacture of pulp and paper (5). Products made from bagasse may not be produced competitively compared with alternatives, unless protected by tariffs (5). For example bagasse paper is not highly valued, cost of production is high (9), and it is therefore not competitive on the world market (2). Hence a very small percentage of the excess bagasse is used for other than fuel purposes. For example, in Thailand, where bagasse is not used for paper manufacture, 1.8 million tons of bagasse are available. It is understood that several paper and pulp plants will utilize this resource (5). In Malaysia, 1800 x 10^3 metric tons of bagasse are available per year, with only 60 x 10^3 tons being used (26). With the high production rate for sugar, there are still millions of tons of unutilized bagasse. The disposition of this excess bagasse has not been specified. However, if it were burned, it would cause air pollution, and if dumped into waterways would cause water pollution (8). Utilization of bagasse is therefore a significant area for investigation.

The quality of bagasse in terms of digestible carbohydrate (non-extracted juice) affects its value as an animal feed. Bagasse is used as an absorbent for molasses in preparation of pelleted ruminant feeds, and the Applied Scientific Research Corporation of Thailand (13) has expressed interest in bagasse to provide roughage for cattle feed in a mix with urea and excess molasses. The Philippine Sugar Industry (PHILSUGIN) and the Agricultural Engineering Department at the University of the Philippines, Los Banos (27) has been looking for funding for a pilot level study to use pelleted bagasse as roughage for cattle. Bagasse is one of the best sub-

strates for cultivation of mushrooms and the fermentation residue can be used as an animal feed. Along with other cellulosic wastes, bagasse can be used as a source of energy for enzymatic and microbial reactions to produce SCP and sugars (2). The group in the Philippines mentioned above is also interested in studying production of SCP from bagasse.

Sugars produced by acid treatment of cellulose can be converted into alcohol. Bagasse is one of the best cellulosic sources available for the production of pentosans, for which there is an expanding market. At a recent UNEP/FAO conference (2) cane growing countries were encouraged to investigate the feasibility of production of pentoses or furfural from bagasse. Sugar-crop fiber (bagasse) may be converted into synthesis gas, from which fertilizer ammonia may be made (11).

In Thailand, a successful experiment has been carried out to press bagasse into boards for use in making decorative furniture. However commercial production of this kind of board has not been started (9). The technology for further processing of bagasse is well developed; though continued research to produce structural materials is required (2).

The supply of bagasse for other uses or as a residue, is dependent on energy costs and the use of bagasse as a fuel. If alternate sources of energy are available to the sugar mills, large quantities of bagasse would be available for the manufacture of pulp, paper and boards, furfural, activated carbons and other products. The prospects, however, are not bright. Account should be taken of the cost of pollution abatement. New developments in decortication (derinding sugar cane) may improve the utility of bagasse and so affect its economic value (2). However, when the two factors of fuel replacement costs and levels of current technology for bagasse nutritional upgrading are considered, one must conclude that

present uses of bagasse are probably optimal (4).

VII. Filter Press Mud

Filter press mud (cachassa) is usually dumped in rivers (2), redistributed on the land after cooling as a soil conditioner (8), or used as animal feed. Mills of 10-100 tons cane per day capacity producing panela (a crude sugar crystallized into a cake form) are less efficient in the clarification step and produce a cachassa much richer in carbohydrates. This rich cachassa is apparently often used for animal feed, at least in South America. For example at the Providencia Sugar Mill in Columbia S.A. (12 T/dy), the cachassa was fed to approximately 900 swine in an adjacent part of the factory (4). The cachassa from a larger mill (azucarera) contains much less sugar and is usually redistributed to the fields as a fertilizer and soil conditioner as a source of phosphate and potassium. This is probably the best use for this material at the present time.

Sugar cane wax can be extracted from filter cake. This wax is used in the cosmetic and shoe polish industries. However, production on commercial scale has not yet been started in Thailand (10, 13). The recovery of wax from the mud however, may be uneconomical (2). ASCRT (Applied Sci. Res. Corp. of Thailand) has also grown rhizobium culture on filter mud after drying, grinding, sieving and sterilization (8).

VIII. Cane Tops

The only crop residue, cane tops, is fed to the farm animals as maintenance diet. The tops are also incorporated in commercial animal feed compositions which also incorporate up to 20% of press mud. A UNEP/FAO meeting concluded that harvesting machinery for sugar should be designed to

better recover cane tops for animal feed. In parts of Africa (12), cane tops are burned in fields.

Sugar cane trash is used in the Philippines as a fertilizer and oil conditioner (12). This residue does not appear to be fully used.

IX. Summary

Bagasse, unused molasses and still bottoms from molasses based alcohol production are the major sugar based residues which are wasted. Wasted molasses and stillage are very significant from the standpoint of transferring and implementing utilization technology and further utilization studies. Suitable countries for such studies are Ivory Coast, Brazil, Philippines and Thailand.

Stillage presents a severe environmental problem in Brazil, the Philippines and elsewhere (2). This problem will get worse, particularly in Brazil, as more and more alcohol for fuel purposes is produced not only from sugar, but also from cassava. There are techniques for treating and using the still bottoms, however the practise of these methods is not widespread. There is probably some need for the development of new technology but by and large it is more than a matter of economics and technology transfer.

Fortunately, the more concentrated a waste stream is, the easier it is to devise economically successful processes to reclaim or utilize its components. The alcohol industry in Brazil and perhaps the Philippines, must begin to practice stillage recycle on a scale equal to that used in India even if some efficiency in hexose conversion to alcohol is lost. The volume of stillage will be greatly reduced and the stillage which must be dealt with will be much more concentrated. Pilot scale work in Brazil or even the Philippines might be warranted to develop the technology to permit the recycle of stillage and to supply concentrated stillage for re-

search and development projects searching for methods to utilize this waste (4)

Molasses is a valuable material which can be used directly for nutritional purposes, production of single cell protein, and production of chemicals, etc. However, due to lack and high cost of transportation facilities in many developing countries, molasses is often wasted. A possible project on molasses fermentation in the Ivory Coast proposed by the second site visit team (4) is given below.

IX. A. Molasses Fermentation - Ivory Coast

Background

Production of sugarcane in the Ivory Coast is a rapidly growing industry with a projection of 500,000 metric T/year production in 1990. Molasses, usually a valuable by-product from cane sugar operations, is currently dumped on roads for dust control. The future production of molasses is estimated at between 150,000-200,000 metric tons/year by 1980. This country, in making a conscious effort to develop animal feeding operations, is currently concerned with sources of feed. The production of a high protein animal feed would certainly be in the best interest of the Ivory Coast's future plans.

Molasses is generally 55 to 60% sugar, primarily glucose, fructose and some sucrose. Current world market price for molasses is around 8.4¢/kg (3.8¢/lbm), or approximately 14-15¢/kg of sugar (6.5¢/lbm). The technology for the production of yeast from molasses is currently well known as is the production of alcohol from molasses. Yeast, because it is a source of vitamins and protein, currently brings a high price on the world market $1.00/kg (45¢/lbm); however, to compete as an animal feed, yeast could probably sell for no more than $350/metric ton (16¢/lbm).

With a projected volume of molasses of 200,000 metric ton/year, at 50% fermentables this could yield 50,000 metric ton/year of yeast. At $350/metric ton, yeast production could be a $17+million/year business in the Ivory Coast with a substantial impact on the food supply within the country.

Process and Economics

A standard fodder yeast (Candida) fermentation should be employed. The technology is firmly established and easily adaptable.

Major processing costs include carbon source, chemicals (primarily nitrogen), utilities, labor, depreciation, taxes, insurances, etc.

Using a range from one half to full market value for the molasses the carbohydrate cost is 4.2-8.4¢/lb. and again with price of urea at $160/ton the following can be calculated:

Price of yeast attributed to substrate at 50% yield	14-28/kg
Price of yeast attributed to nitrogen source at 50% protein	2-8¢
Total for chemicals and carbon source	16.8-30.8/kg
If sun drying is used from 30% solids to 95% solids approximate cost @ .4¢/lb. H_2O	1.8¢
The product cost range exclusive of utilities, labor, depreciation, taxes, and insurance is	18.6-32.6¢ or $186-326/M ton
In this case the utilities, labor depreciation and taxes will be between .3 to .5 times the above (lower than usual because of the higher substrate costs), therefore, the product cost range is between	$242-490/M ton (major difference is price assigned to substrate)

The low figure is an excellent price for high quality yeast protein and could compete with feeds of equivalent quality such as fish meal ($400/M ton). The high figure is unlikely but still causes some concern as to

the potential for this process. The high quality of the yeast product expands the potential market (human food) making it a more attractive investment.

Our opinion is that there is some risk involved but it is worth exploring. The potential impact is substantial and a ready made internal market is already part of the Ivory Coast National Plan.

Recommendation: AID funds be provided to conduct an extensive market analysis and explore the possibility of a government subsidized price of molasses as part of their national plan. Also, it is recommended that a demonstration facility be constructed in conjunction with an existing sugar mill or cooperative of mills to convert currently wasted molasses into fodder yeast.

REFERENCES

1. Kohn, Philip M., "A Sweet Future for Sugar Products", Chemical Engineering, January 31, 1977, p. 63-65.

2. "Residue Utilization - Management of Agricultural and Agro-Industrial Wastes", Report of the UNEP/FAO Seminar on Residue Utilization - Management of Agricultural and Agro-Industrial Wastes, Rome, 18-21 January 1977.

3. Hurt, Leslie C., Foreign Commodity Analysis, Sugar and Tropical Products, Foreign Agricultural Service, "Asian Sugar Producers Show Mixed Reaction to Low Prices", Foreign Agriculture, April 18, 1977, p. 10-12.

4. Barnett, Stanley; Nystrom, John; Dunlap, Charles, Trip Report, AIChE-AID/LIFE Survey Team II, October 23 - November 17, 1976.

5. Bhushan, Bharat, Regional Research Laboratory, Hyderabad, India, "Agricultural Residues and Their Utilization in Some Countries of South and South-East Asia", Industry Sector Seminars, Residue Utilization-Management of Agricultural and Agro-Industrial Wastes, FAO, Rome, 18-21 January 1977.

6. Haviland Jr., Guy L.; Ratanapanachote, Panida, Office of U.S. Agricultural Attache, Bangkok, Thailand, "Strong Future Growth Seen for Thai Sugar Industry", Foreign Agriculture, May 29, 1976, p. 8-12.

7. Cooney, C. L.; Dunlap, C. E., "Final Trip Report on a Visit to Panama to Survey the Utilization of Agricultural Wastes for Animal Feed", March 17-31, 1974, Department of State, AID, Office of Nutrition. (MIT Inter. Nutrition Planning Papers/75-1 C75-7, March 1975)

8. Fleischman, M., Steinkraus, K. H., Meade, R., AIChE-AID/LIFE Project Report of First Site Visit, July 27-August 21, 1976.

9. Haviland Jr., Guy L., Agricultural Attache, U.S. Dept. of Agricultural Attache, U.S. Dept. of Agricultural, Foreign Agricultural Service, Office of Agricultural Attache, American Embassy, Bangkok, Thailand. (Correspondence with Dr. Marvin Fleischman, June 8, 1976)

10. Imrie, F. K. E., Group Research and Development, Tate & Lyle, Ltd., "The Treatment of Sugar Industry Effluent", Effluent Treatment in the Biochemical Industries Conference, Connaught Rooms, London, England, November 27-28, 1975.

11. U.S. Department of Health, "An Industrial Waste Guide to the Cane Sugar Industry", 1960.

12. Reilly, P., Barnett, S., Schopmeyer, H., Third Site Visit, AIChE-AID/LIFE Project, January 1977.

13. Applied Scientific Research Corporation of Thailand, 196 Phahonyothin Road, Bangkhen, Bangkok 9, Thailand.

14. Dr. Amara Bhumiritana, Institute of Food Research and Product Development, Kasetsart University, Box 4-170, Bangkok 4, Thailand. "Utilization of Molasses as a Substrate for Production of Yeast Protein"

15. Generoso I. Rivera, Jr., Acting Asst. Director, IR & D, Philippine Sugar Institute, P.O. Box 70, U.P., Diliman, Quezon City.

16. Birch, G. G., Parker, K. J., Worgan, J. T., "Food from Waste", Applied Science Publishers Ltd., London, England. p. 42-51 and 186-187.

17. Dr. Salome del Rosario, Unlad Resources Development Corp., 826 Gen. Malvor St., Malate, Manila, Philippines.

18. Dr. Florentino Solon, National Nutrition Council, Manila, Philippines.

19. Centro de Tecnologia Promon, CTP, "Stillage Treatment with By-product Recovery", CTP Newsletter, Vol. 1, No. 2, November 1976. (Correspondence to Dr. Marvin Fleischman from Carlos Costa Ribeiro, Ph.D., CTP, Avenido Rio Branco, 103-20º, andar, 2000 - Rio de Janeiro, RJ., Brazil)

20. Eric Crabbe, EPA Regional Office, New York, NY.

21. Dr. R. M. Gray, "Recovery and Utilization of Residues from Brewing and Other Fermentation Processes", UNEP/FAO Seminar on Residues Utilization-Management of Agricultural and Agro-Industrial Wastes, Rome, January 1977.

22. George Dorion, Bacardi Rum, Director of Advanced Projects, P.O. Box 26368, Jacksonville, Florida.

23. Updegraff, D. M.; Espinosa, Rodolfo; Griffin, Larry; King, Jeannette; Schneider, Sheryl; Roly, Carlos, "The Production of Animal Feed by the Growth of Fungi on Wastes from the Coffee and Rum-Distilling Industries", Developments in Industrial Microbiology, American Institute of Biological Sciences, Washington, D.C., 1973.

24. Environmental Protection Agency, "Rum Distillery Slops Treatment by Anaerobic Contact Process", EPA 66012-74-074, July 1974.

25. Missiaen, Edmond, Asst. U.S. Agricultural Attache, Brasilia, Brazil, "Brazilian Agriculture to Help Meet Fuel Needs", Foreign Agriculture, May 2, 1977, p. 9-10.

26. William D. Sorenson, UNEP/FAO, Lembaga Pertubuham Peladang, Blok 3, Tingkat Dua, Kompleks Pejabat Damansara, Janal Dungun, Damansara Heights, Kuda Lumpur, 23-04, Malasia.

27. Department of Agricultural Engineering, University of the Philippines at Los Banos, College of Agriculture, College, Laguna, Philippines.

28. Keeler, Harold G., Industrial Pollution Control, Office of Research and Monitoring Environmental Protection Agency, Washington, D.C.

Appendix A. Kenya (12)

1. Kenya is a large-scale producer of sugar and produces two types:

   A. Refined (white) sugar.

   B. "Jaggery" or crude sugar. This product is brown and is produced from concentrating the whole juice. The price of refined sugar is presently 4 shillings/kg ($0.22/lb) and of jaggery 2 shillings/k ($0.11/lb). The price tends to remain in this ratio with jaggery about half the price of refined sugar.

The largest byproduct is molasses, approximately 50,000 ton/yr., most of which is sometimes dumped because the price is only $30/ton compared to five times than in the U.S. Only one out of the five factories produces ethanol, and only a little of the molasses is used in feed. Shell Chemicals mixes molasses with other chemicals to produce an animal feed called MUM.

Pfizer has a molasses plant in Nakuru using a U.S. process to remove moisture from molasses and add vitamins to provide a block for animal feed. G.D. Penfeld, Manager, Agricultural Developers, believes that in 3-5 years there will be enough excess molasses to go to single cell protein or alcohol, since Kenya plans to double its output of cane. Even now, molasses is dumped in the country. Export of the excess is difficult because there are not enough rail rankcars, the costs of transportation from the source of production beyond Nakuru to the coast of Mombasa is high, and the molasses is of variable quality because of different processing methods.

The beef industry, a market for Pfizer's animal feed, is "going to pot." This is mostly due to the breakup of large plots, but government control of feed prices at levels below the world market also plays a role. Therefore feed is not in as short supply as elsewhere.

Another possible animal feed is sisal bagasse, which is now mainly burned or dumped. It however is not as palatable to cattle as other feeds.

Though there is a great deal of sisal bagasse in Kenya, the industry is not healthy because of competition from synthetics

Molasses could be fermented to alcohol or used to produce high protein feed by fermenting with suitable organisms. The Kenyans are watching the Brazilian effort to require 10% ethanol in gasoline by 1980 with interest.

The stillage from fermentation of molasses to alcohol could be used to grow tilipia, a tropical carp-like fish. This fish is a very efficient converter of feed - 1 lb. solid still bottoms plus nutrients can produce 1 lb. of gain in the fish. This is being done in the Philippines.

Appendix B. Zambia (12)

1. Of the sugar mill wastes in Zambia, bagasse presently goes to fuel, molasses to animal feeds (though it was used on roads in the past) and filter mud to animal feed. Commercial farmers buy directly from the sugar refiners. National Milling Corporation picks up some sugar byproducts for its feeds. Besides the conventional ingredients above, National Milling adds 600 ton/yr molasses to its feed and uses poultry manure in its cattle feed.

2. The Zambia Sugar Company Limited

P.O. Box 489

Lusaka

Present:

J. B. Ranger, Managing Director, Zambia Sugar

Charles N. Sitali, U.S. Embassy

Peter J. Reilly and Stanley Barnett, AIChE/LIFE

Zambia Sugar is partially owned by Tate and Lyle, which supplies technical backup and has seconded Mr. Ranger. It has a major estate at Mazabuka, south of Lusaka, which is 30 x 15 km in extent.

It is currently producing 85,000 ton/yr sugar from 1.2 million ton/yr cane, but expects to increase production to 125,000 ton/yr and enter the export market. Bananas are also produced for the local market. By government policy, sugar is sold on the domestic market below cost. Because of foreign exchange limitations, paper containers for sugar are in short supply, causing a local sugar shortage.

Bagasse, worth K6-7/ton ($8-9/ton) is now burned for fuel. At the beginning of the season, using cane with 11-12% fibers, bagasse is supplemented by fuel. At the end of the season there is excess bagasse. A new boiler may make excess bagasse available, probably for paper and particle board production.

Filter press mud used to be dried and spread on the field. Now it is spread via the irrigation system. It is particularly good on poor soils, as it is high phosphate. The mud is high in potash also, but so is the soil. It is not suitable for animal feed because of the residual ash from cane burning.

Cane tops are burned. Some stalk sheath does not burn and could be used for anmial feed if it were economical to collect. Animals are not let in the fields between seasons because of irrigation.

About 3% of the cane winds up as molasses. Molasses is blended to order for farmers in 2-10% mixtures with urea. Blackstrap molasses is also sold directly to farmers for K10/ton ($12.50/ton). Artificial prices of farm products mean that farmers cannot pay much. In addition, molasses is sold on the world market through Dar es Salaam at $40/ton.

A distillery will be built to process 20,000 tons of molasses to produce six million liters/yr ethanol. A local market exists for only one million liters/yr, so the rest can be exported. At that point 10,000 ton/yr of molasses will be left over.

Appendix C. Philippine Distillery (12)

Berbacs Chemical Company

23 E. de los Santos Ave.

Makati, Metro Manila

Present:

Domingo Molina, Plant Manager, Molasses Distillery

Luz C. Salonga, Department of Chemical Engineering, UP Diliman

Peter J. Reilly and H. H. Schopmyer, AIChE/LIFE

This plant was located in San Pedro, south of Manila. Cane molasses with a sugar content of about 55 to 58% and a solids content of about 72% was obtained from neighboring sugar plants. The molasses was diluted to about 15% solids, acidified with sulfuric acid to pH 4.8, and inoculated with 12,000 liters of pure yeast culture built up in seven steps from agar slants. The fermentation was carried out in closed steel fermenters equipped with coils and sprayed with water on the outside. The fermentation temperature was maintained at 32 C with 20 C water from a deep well, and the fermentation was finished in about 30 hours.

The alcohol content of the finished fermentation was between 7 and 8% by weight, and about 0.5 to 0.8% of residual sugars remained. The fermentation efficiency was 90-91% and distillation efficiency was 94-95%.

For distilling, there were two 4 ft. beer columns with rectifying columns, one copper and one stainless steel, made in the Philippines. The alcohol was taken off at 192 proof and sold for beverage spirits. The tax was 1 peso/liter ($0.14/liter), delightfully low by U.S. standards. The company is also planning to convert alcohol to polyesters.

A small stream was being taken off which Mr. Molina identified as methyl alcohol. He was using it pure in a jeep as motor fuel, and insisted that the motor ran very satisfactorily. It is more likely that the material was actually the heads off the aldehyde column and contained some acetaldehyde.

The fermented molasses was run through a centrifuge to remove the yeast, which was filtered again to remove as much water as possible, then dried on a hot roll to be blended into animal feed. The protein content of the dried yeast is 75%. The product off the hot roll was black, however, indicating considerable charring, which might impair the nutritive value of the protein somewhat.

The waste stillage had an initial BOD of about 35,000 ppm. It cannot be used directly for irrigation because the odor is too offensive and large numbers of worms grow in the residue. Therefore, it was treated in a series of steps as follows:

1. Fermented anaerobically in large open concrete tanks for two days.
2. Pumped to aerobic digestion tanks with aeration and held 1 1/2 days.
3. Chemically precipitated by use of lime and alum and allowed to settle 8 hours.
4. Subjected to further aerobic digestion and chemical precipitation.
5. Filtrate run to rice paddy for irrigation and sludge sent to landfill.

The filtered liquor is light brown in color and has a BOD of about 300 ppm, still above the government's limit of 50 ppm for discharge into streams. There are apparently no regulations so far as odor is concerned, for the odor around the whole distillery area was quite bad, probably due to the anaerobic digestion step in the waste disposal system.

An interesting side development was Mr. Molina's attempt to grow fish using untreated stillage as a nutrient. A pond with earthen walls about 30 meters wide, 60 meters long and two meters deep had been filled with water and a plant identified as kang kong, which grows in long vines that look like sweet potato on the surface, added. This plant covers about 1/3 of the surface of the pond. In addition, a carp-liek fish called tilipia had been introduced. Small amounts of raw stillage, diluted 10 times, are added at intervals to keep the pond BOD in the range of 30 to 50 ppm. The fish was

expected to grow from fingerling to 10 in. in about six months; after two months none had died. The kand kong is a high protein material, the leaves of which are eaten for human food.

The whole setup, including fermentation, distilling, yeast recovery, and waste disposal, seemed to be handled in very good fashion.