AGENCY FOR INTERNATIONAL DEVELOPMENT
WASHINGTON, D. C. 20523

BIBLIOGRAPHIC INPUT SHEET

FOR AID USE ONLY
Batch 70

1. SUBJECT CLASSIFICATION

A. PRIMARY: Science and technology — TC00-0000-0000

B. SECONDARY: Applications

2. TITLE AND SUBTITLE
Village technology handbook,sect.2: Health and sanitation

3. AUTHOR(S)
(101) Volunteers for Int.Technical Assistance,Mt.Rainier,Md.

4. DOCUMENT DATE	5. NUMBER OF PAGES	6. ARC NUMBER
1970	50p.	ARC

7. REFERENCE ORGANIZATION NAME AND ADDRESS
VITA

8. SUPPLEMENTARY NOTES (*Sponsoring Organization, Publishers, Availability*)

9. ABSTRACT

10. CONTROL NUMBER
PN-AAE-659

11. PRICE OF DOCUMENT

12. DESCRIPTORS
Toilet facilities
Schistosomiasis
Intermediate technology

13. PROJECT NUMBER

14. CONTRACT NUMBER
CSD-2795 GTS

15. TYPE OF DOCUMENT

AID 590-1 (4-74)

IN
CSD-2745
VITA

Village Technology Handbook

SECTION 2: HEALTH AND SANITATION

FOREWORD

Progress is the result of man's mastery of the world he lives in. The VILLAGE TECHNOLOGY HANDBOOK is aimed at helping villagers to master the resources available to them: to improve their own lives and to bring their villages more fully into the lives of the nations of which they form a basic and important part.

Village development takes on special importance in the light of the fact that 80 percent of those who live in less-developed countries live in villages. If progress is to come to nations, progress must come to villages.

Technical information is a basic factor in progress, along with other basic factors: political, social and economic. The VILLAGE TECHNOLOGY HANDBOOK was conceived by VITA Volunteers in 1962 as a means of bridging the "technical information gap" which keeps the world's villages from learning from one another's experience. The book's aim is to gather in one publication information from many sources which has been found helpful in villages.

This handbook was first published by the U.S. Agency for International Development in two volumes in 1963 and 1964. In the 1970 edition, the two earlier volumes are integrated into one book, the editing has been made more uniform, some new information has been added and the illustrations have been improved. The entire handbook has been checked for accuracy by VITA Volunteer specialists. A new feature in this edition is the incorporation of information on other publications which cover in detail subjects which are discussed only briefly here. VITA plans to continue to improve the handbook in future editions to make it increasingly effective as a key to existing technology for village workers.

The information in the handbook has come from many sources. VITA hopes that criticism and new information will come from many of the same sources--and from other sources. The questionnaire on page ix was designed to stimulate this flow of criticism and information. VITA will test new information and then disseminate it to those who need it.

VITA is grateful to the U.S. Agency for International Development for its financial support of the revision and for its help in reviewing the contents. Thanks are also due to the Federal Extension Service, U.S. Department of Agriculture, for its help in reviewing the section on "Home Improvement".

A NOTE ON USING THE HANDBOOK

This handbook describes techniques and devices which can be made and used in villages. Hopefully the book will generate new ideas as well as pass on information which has already been tried.

Some of the practices suggested here can be adopted on an individual basis. Others, however, will require cooperation by many people and, perhaps, by government agencies. In many cases, it

would be well to seek out extension services existing in your area. If local government or university extension services are available, they will be able to give you information well suited to local conditions. In some cases, there may be a need for a credit union or a consumer, marketing, housing or service cooperative. Information on credit unions is available from:

CUNA International, Inc.
World Extension Department
Box 431
Madison, Wisconsin 53701
U.S.A.

Information on cooperatives is available from:

Agricultural Cooperative Development International
Suite 1200
1430 K St., N.W.
Washington, D.C. 20005
U.S.A.

When the materials suggested in the handbook are not available, it may be possible to substitute other materials; but be careful to make any changes in dimensions made necessary by such substitutions.

Dimensions are given in metric units in the text, with English units in parentheses. Only metric units are given in the illustrations. Conversion tables are given in the Appendix.

Reference materials, along with information on where they can be obtained, are listed at the end of a specific entry when they pertain to that entry. When they refer more generally to the field covered in a section of the book, they are given at the end of the section. If you cannot get these publications, VITA may be able to help you.

If you want to use translations of material in the handbook, we ask you to let VITA know. The material you want may already be translated; if it is not, and if you translate it, VITA would like to make your translation available to others.

If you have questions on the material presented here, if you run into problems in implementing the handbook's suggestions, or if you have other technical problems, do not hesitate to ask for the personal help of a VITA Volunteer specialist. Write to:

VITA
3706 Rhode Island Avenue
Mt. Rainier, Md. 20822
U.S.A.

VITA's Volunteer Translation Service can translate letters in languages other than English, but correspondence moves much more quickly when carried on entirely in English. To help VITA Volunteers find a useful solution to your problem as quickly as possible, you should:

1. Be quantitative--give measurements, sketches or, when possible, photos.

2. Explain what materials are available and what limitations there are on cost.

3. Describe the best solution, if any, found so far in the area.

4. Explain any pertinent social or cultural conditions.

5. Indicate a deadline for action, especially if immediate attention is needed.

6. Don't expect miracles on the first reply. Successful problem-solving often takes a number of letters back and forth.

WHAT IS VITA?

VITA (Volunteers in Technical Assistance) was established in 1959 as a private, non-profit organization responding to requests for assistance in economic and social development. VITA mobilizes and coordinates the work of over 7,000 volunteer professionals representing 96 countries, 2000 corporations, universities, and other institutions. The VITA talent bank represents know-how in commerce and industry, agriculture and education, engineering and public health, in addition to many other fields.

VITA provides the most appropriate knowledge to specific calls for assistance from individuals, organizations, small businesses and self-help development groups. In its brief history VITA has responded to over 25,000 requests. VITA meets people's needs through the mail, by telephone, and by on-site counselling. Requests have come from village councils, community development volunteers, farmers, small business owners, and from members of national and international public and private institutions. VITA's unique method matches people with need and people with knowledge to give. This partnership increases the opportunity for the success of the requester's project.

One of the most effective ways that VITA shares its information with many people in through its Publications Program. The VILLAGE TECHNOLOGY HANDBOOK has played an important role in helping to disseminate that information. Supplementing this book is VITA's Technology Manual series, how-to-do-it booklets, which cover a wide spectrum of subject matter. A publications list is available on request.

In its OVERSEAS LIAISON PROGRAM, VITA encourages the formation of similar technical assistance programs throughout the world. Cooperation with these and other organizations working in the developing countries will give VITA access to on-the-spot background information on the technological aspects of international development.

VITA is financed by contributions from private individuals, foundations and industry, and by government grants.

SYMBOLS AND ABBREVIATIONS USFD IN THIS BOOK

@ . . . . at
" . . . . inch
' . . . . foot
C . . . . degrees Celsius (Centigrade)
cc . . . cubic centimeter
cm . . . centimeter
cm/sec . centimeters per second
d or dia. diameter
F . . . . degrees Fahrenheit
gm . . . gram
gpm . . . gallons per minute
HP . . . horsepower
kg . . . kilogram
km . . . kilometer
l . . . . liter
lpm . . . liters per minute
l/sec . . liters per second
m . . . . meter
ml . . . milliliters
mm . . . millimeters
m/m . . . meters per minute
m/sec . . meters per second
ppm . . . parts per million
R . . . . radius

QUESTIONNAIRE

NOTE TO THE READER: VITA's publications are compiled by VITA Volunteers because they want to help people in developing areas. With your field experience, you are in a unique position of being able to increase the usefulness of this work by sharing what you have learned with the people who will use the publications in the future. You are strongly urged to complete the following questionnaire (using additional sheets if necessary), cut it out and send it to:

VITA
3706 Rhode Island Avenue
Mt. Rainier, Md. 20822
U.S.A.

Date _____

Name _____ Agency _____

Address _____

_____

1. Which items from the VILLAGE TECHNOLOGY HANDBOOK have you put into practice?

2. Have results been good or otherwise?

3. Have you made improvements or modifications in any of the devices or techniques? If so, please describe them, including photographs or sketches if possible.

4. Have you devised any new equipment or techniques not described in the handbook which may be of use to others? If so, please describe them.

5. Did you find the handbook useful, too simple, too complex, incomplete?

6. Other comments and suggestions:

TABLE OF CONTENTS

Forward v
A Note on Using the Handbook v
What is VITA? vii
Symbols and Abbreviations Used in This Book viii
Questionnaire ix

SECTION 1: WATER RESOURCES 1

Part 1: Developing Water Sources 3
- Getting Ground Water from Wells and Springs
- Tubewells
- Dry Bucket Well Drilling
- Driving Wells
- Dug Wells

Part 2: Water Lifting and Transport 63
- Water Transport
- Water Lifting
- Pumps

Part 3: Water Storage and Water Power 107
- Spring Development
- Cisterns
- Selecting a Damsite
- Reciprocating Wire Power Transmission

Part 4: Water Purification 123
- Boiler for Drinking Water
- Chlorination for Polluted Water and Super-Chlorination of Wells, Spring Encasements and Cisterns
- Water Purification Plant
- Sand Filter

SECTION 2: HEALTH AND SANITATION 145

Part 1: Sanitary Latrines
Part 2: Bilharziasis

SECTION 3: AGRICULTURE 183

Part 1: Earth Moving Devices for Irrigation and Road-Building
Part 2: Irrigation
Part 3: Poultry Raising
Part 4: Silage for Dairy Cows

SECTION 4: FOOD PROCESSING AND PRESERVATION 255

Part 1: Storing Food at Home
Part 2: Storing Vegetables and Fruits for Winter Use
Part 3: How to Salt Fish

SECTION 5: CONSTRUCTION 283

Part 1: Concrete Construction
Part 2: Bamboo Construction
Part 3: Glues

SECTION 6: HOME IMPROVEMENT 319

Solar Water Heater
Washing Machines
Cookers and Stoves
Home Soap Making
Bedding

SECTION 7: CRAFTS AND VILLAGE INDUSTRY 353

SECTION 8: COMMUNICATIONS 365

Part 1: Bamboo or Reed Writing Pens
Part 2: Silk Screening
Part 3: Inexpensive Rubber Cement

APPENDIX

Temperature Conversion 377
Length Conversion
Weight Conversion
Conversion Tables

Sanitary Latrines

The proper disposal of human waste is one of the most pressing public health problems in many rural communities. The use of sanitary latrines or privies can be very effective in helping to control disease. To stop filthborn disease, it is also necessary to have sanitary water supply, sanitary food handling, sufficient medical service and adequate diet.

Human nightsoil (nightsoil is a term used for human excrement in many parts of the world) is a carrier of many diseases. These diseases are spread by water, soil, insects or hands. The sanitary latrine breaks this cycle. Some sicknesses that can be controlled by widespread use of sanitary latrines are dysentery, cholera, typhoid and worms. The human suffering and economic loss caused by these is staggering. It has been said that half of the food raised by a man with intestinal parasites is consumed by the very worms that make him sick.

However, a latrine program must reach most or all of the people. This means a carefully planned, continuing long-range program with participation by government agencies, foreign workers, community leaders and most of all by the individual families. Proper latrine designs which fit the cultural pattern are economically possible and can satisfy the sanitary needs of a successful latrine program. Selected plans and designs for sanitary latrines are given in the entries which follow. Before starting a latrine program for your village, it is recommended that you contact government and agency health organizations, observe their programs and obtain their cooperation.

The recommended kinds of privies are:

1. Pit privies: a simple hole in the ground, covered with a properly built floor, hole and shelter. It has two forms, the dry pit which does not penetrate the water table and the wet pit, which does.

2. Water privies: where a water-tight tank receives the nightsoil through a drop pipe or chute. An overflow pipe takes the digested material to an underground seepage pit or drainage area.

Finally a water-seal slab may be used to cover either of these types of privies to provide a completely odorless privy.

Other types of simple latrines are not recommended for general use, because they usually fail to provide enough sanitary protection.

A good privy should fulfil the following conditions:

- It should not contaminate the surface soil.
- There should be no contamination of ground water which can enter springs or wells.
- There should be no contamination of surface water.
- Nightsoil should not be accessible to flies or animals.
- There should be no handling of fresh nightsoil; if it is necessary, it should be handled as little as possible.
- There should be no odors or unsightly conditions.
- The method used should be simple and inexpensive in construction and operation.

Source:

Excreta Disposal for Rural Areas and Small Communities, by Edmund G. Wagrer and J. N. Lanoix, World Health Organization, Geneva, 1958.

PRIVY LOCATION

Outhouses or privies should be close to the home, but they should be lower than water sources and far enough away from these sources that they will not pollute the water.

The information given here covers most normal situations, but it is always best to have a trained sanitary engineer review your installation or program.

A latrine site should be dry, well-drained and above flood level.

If the bottom of a privy pit is in dry soil and at least 3 meters (10') above the highest ground water table, there is very little danger that it will contaminate water supplies. This is because the pollution will move downward no more than 3 meters with only 1 meter (3.3') of side movement. (See section on "Ground Water"). If the privy pit enters the water table or comes close to it when the water is at its highest level, pollution will spread to the water and endanger health.

Figure 1 shows the movement of pollution through the soil. It is particularly important to understand this movement when choosing a site for a privy or well. Put the privy downhill from the water source, or as far to one side as possible. On flat or gently sloping land, water moves toward the well as though it were going downhill. This is because when water is removed from a well, water from the surrounding soil flows toward it. Thus pollution from a nearby privy would move toward the well. If the land is flat or if the well is downhill from the privy, do not put the privy closer to the well than 15 meters (50'). In sandy soil, a distance of 7.5 meters (25') is sometimes enough because sand helps to stop bacterial pollution.

These rules do not apply in regions containing fissured rocks or limestone formation. Expert advice is necessary in these cases, because pollution can be carried great distances through solution channels to the drinking water supply.

It is important to keep the latrine close to the house so that it will be used, but not too close. Putting the privy downhill also encourages use. People are more apt to keep a privy clean if it is close to the house.

Remember that all privies have to be moved when filled. This should be made easy or there will be a tendency to let them become overfull. This always results in very unsanitary conditions and extra work to put the system in proper working order.

Source:

Excreta Disposal for Rural Areas and Small Communities, by E. G. Wagner and J. N. Lanoix, World Health Organization, Geneva, 1958.

BACTERIAL AND CHEMICAL SOIL POLLUTION PATTERNS AND MAXIMUM MIGRATIONS*

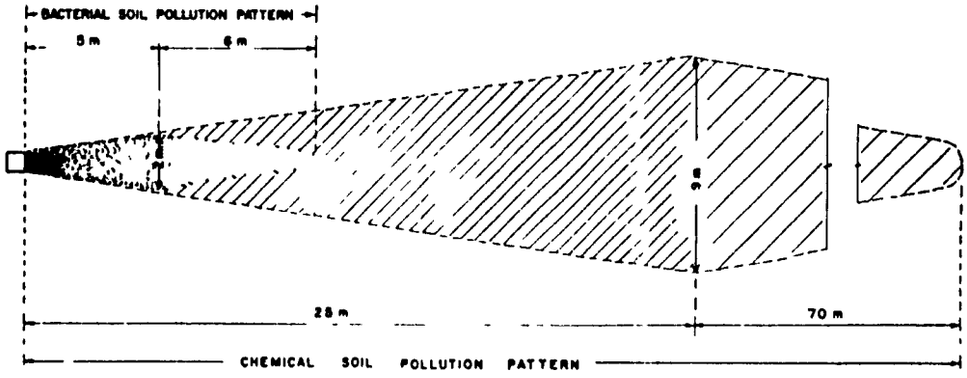

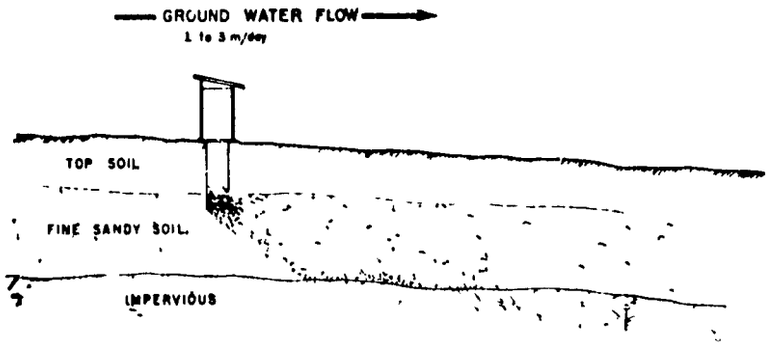

The source of contamination in these studies was human excreta placed in a hole which penetrated the ground-water table Samples positive for coliform organisms were picked up quite soon between 4 m and 6 m (13 ft and 19 ft) from the source of contamination The area of contamination widened out to a width of approximately 2 m (7 ft) at a point about 5 m (16 ft) from the privy and tapered off at about 11 m (36 ft) Contamination did not move "upstream" or against the direction of flow of the ground water After a few months the soil around the privy became clogged, and positive samples could be picked up at only 2 m to 3 m (7 ft to 10 ft) from the pit In other words, the area of soil contamination had shrunk

The chemical pollution pattern is similar in shape to that of bacterial pollution but extends to much greater distances

From the point of view of sanitation, the interest is in the maximum migrations and the fact that the direction of migration is always that of the flow of ground water In locating wells, it must be remembered that the water within the circle of influence of the well flows towards the well No part of the area of chemical or bacterial contamination may be within reach of the circle of influence of the well

MOVEMENT OF POLLUTION IN UNDERGROUND WATER

FIGURE 1

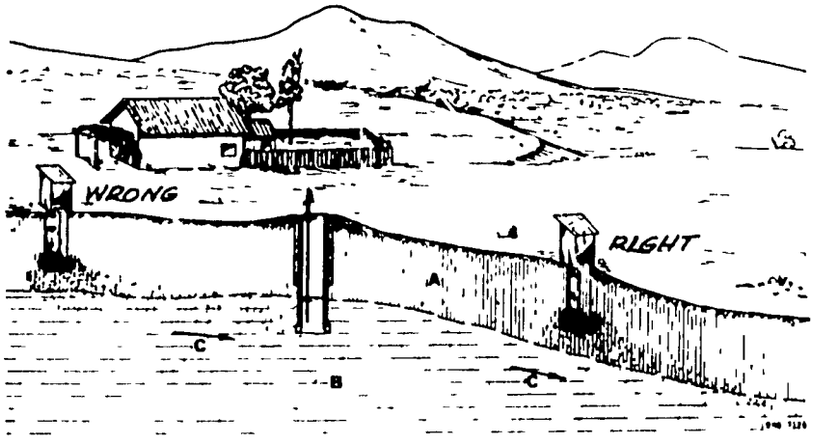

A = Top soil B = Water-bearing formation C = Direction of ground-water flow

PRIVY SHELTERS

Several designs of privy shelters which have been found satisfactory in many parts of the world are shown in Figure 2. Important points to consider when designing a shelter are listed below.

TOOLS AND MATERIALS

Corrugated sheet metal roofing: 1.2m x 1.2m (4' x 4') or larger

Wooden posts: 5cm x 5cm (2" x 2") and 20m (66') long

Boards: 2cm (3/4") thick, 20cm (8") wide, 40m (132') long

Nails

Handtools

Paint: 2 liters (2 quarts)

The shelter should be built to suit the abilities and desires of the local people, because sanitary precautions are less important for the shelter than for the pit and slab. For a properly built shleter:

1. Choose a standardized design for economy in building.

2. Build the shelter to last as long as the pit, 8 to 15 years.

3. Build the shelter to fit the floor slab. It should not be so large that poeple will be tempted to use any part of the floor when the area around the hole has been soiled by earlier users. The door should be 2m (6 1/2') high. The roof should be 2.1m (7') high at the entrance and 1.7m (5 1/2') high at the back.

4. Openings at the top of the shelter's walls, for airing the interior, should be 10cm to 15cm (4" to 6") wide. All openings to be screened tightly.

5. Some natural light should be let in, but the structure should give enough shade over an uncovered seat or hole that flies will not be attracted.

6. The latrine should be kept neat and clean so that people will continue to use it. Paint or whitewash the shelter. Cut back nearby vegetation. The roof should have a large overhang to protect the walls and the mound from rain damage and to keep the privy area from getting muddy.

7. The door should fit tightly, preferably having a spring return.

8. All cracks and crevices should be tightly sealed with native materials to prevent entry by flies or mosquitoes.

9. Roof edges to overhang the shelter sides should be at least 30.5cm (12") all around.

10. A cover should be provided for the opening in the slab and should be hinged if possible.

Source

Excreta Disposal for Rural Areas and Small Communities, by Edmund G. Wagner and J. N. Lanoix, World Health Organization, Geneva, 1958.

COMPLETED PRIVY, SHOWING PALM THATCH WALL AND ROOF COVERING

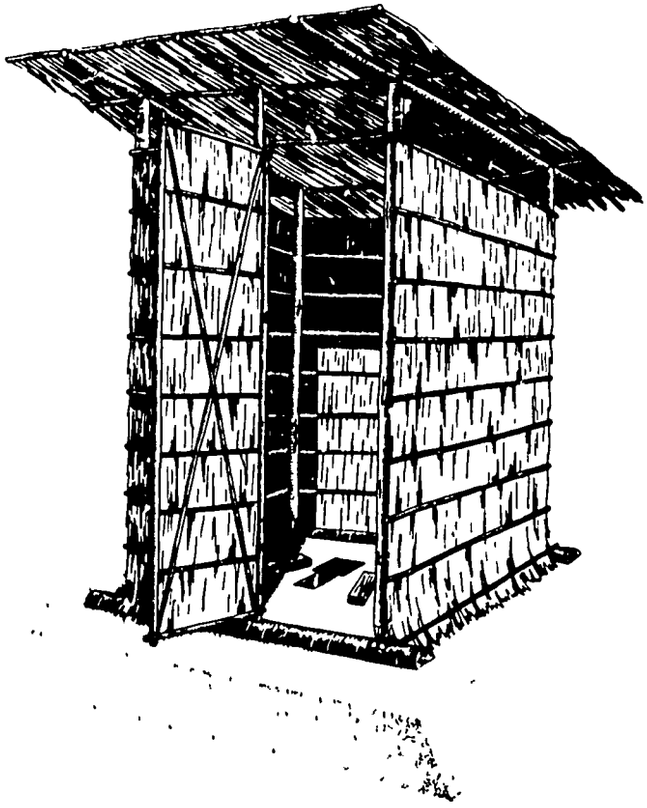

WATTLE HOUSE WITH PALM THATCH ROOF

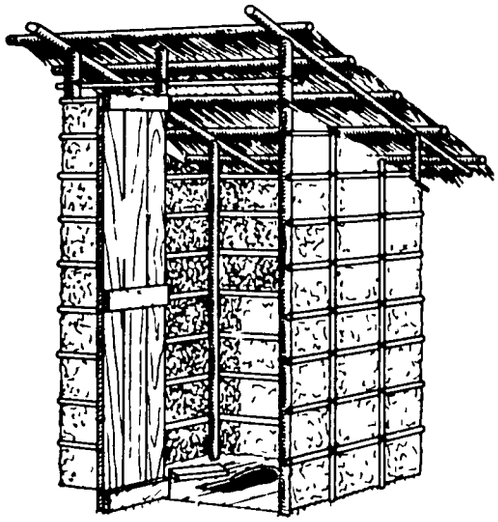

HOUSE OF CUT LUMBER WITH CORRUGATED METAL OR ASBESTOS CEMENT ROOF

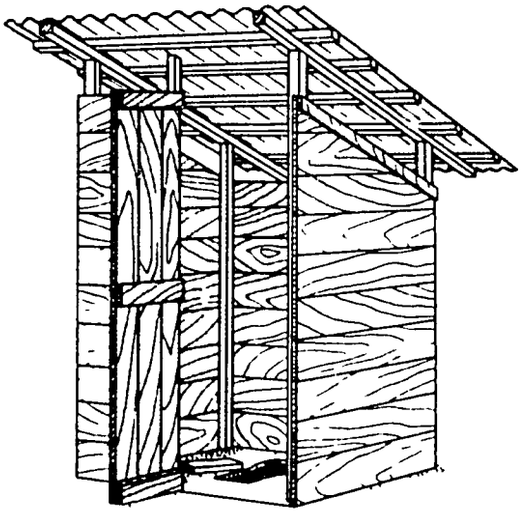

FIGURE 2

TYPE OF SUPERSTRUCTURE RECOMMENDED BY US PUBLIC HEALTH SERVICE

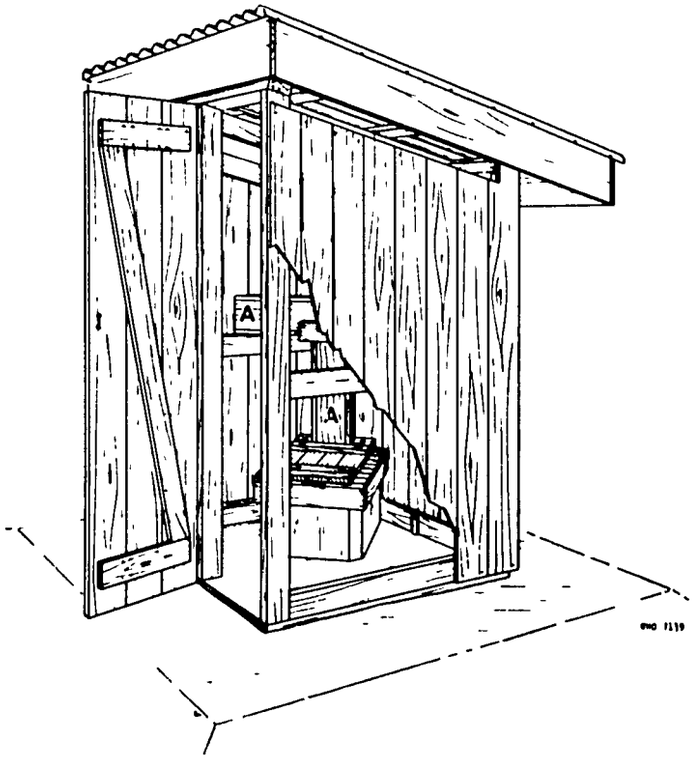

HOUSE OF BRICK WITH TILE ROOF

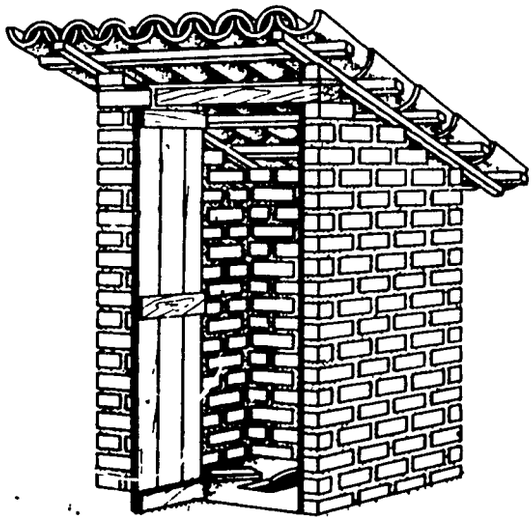

Adapted, by permission, from United States Public Health Service (1933) *The sanitary privy*, Washington, D C. (Revised type No. IV of *Publ Hlth Rep. (Wash)*, Suppl. 108)

A = Vent pipe with lateral outlet

PIT PRIVY

The pit privy described here is the simplest recommended latrine or privy. It consists of hand-dug hole, a properly mounted slab and a shelter. Of the many existing designs for privies, the sanitary pit privy is the most widely applicable.

FIG. 3 VARIOUS PARTS OF A SANITARY PRIVY

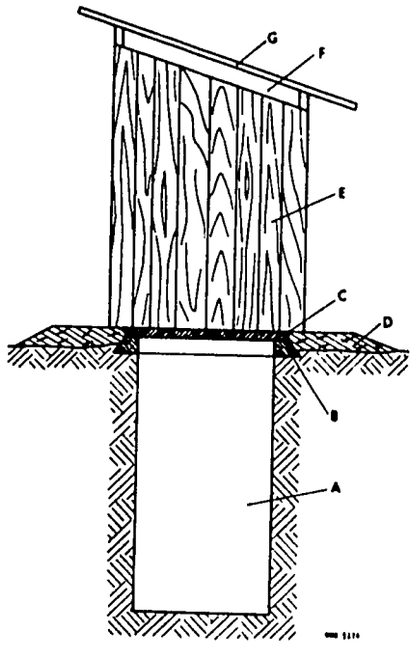

A = Pit
B = Base
C = Floor
D = Mound
E = House, including door
F = Ventilation
G = Roof

Tools and Materials

Materials for building the shelter

Handtools for digging the pit, making concrete and building the shelter

The Pit

The pit is round or square, about 1m (3.3') in diameter or 1m (3.3') on each side, and usually from 1m (3.3') to 3m (10') deep. The pit

		Estimated volume and depth* for hole with 1 square meter area Personal Cleansing Material			
		Water		Solid (for example, grass or paper)	
Pit Type	Years of Service	Volume in cubic meters	Depth in meters	Volume in cubic meters	Depth in meters
Wet-Pit	4 8 15	0.7 1.5 2.7	0.7 1.5 2.7	1.1 2.3 4.2	1.1 2.3 4.2
Dry-Pit	4 8 15	1.1 2.3 4.2	1.1 2.3 4.2	1.7 3.4 -	1.7 3.4 -

Figure 4. Privy capacities for a family of five. A wet-pit privy is one which penetrates the water table. A dry-pit privy does not.

*Add 50cm to the depth given in the table, because the pit should be closed and filled with earth when the waste comes to within this distance from the surface.

may have to be lined with brick, wood, bamboo or some other material to keep it from caving in, even in hard soil. The top 50cm (19 1/2") of the hole should be lined with mortar to make a solid base for the slab and the shelter.

The table in Figure 4 will help you to estimate the depth of hole to make.

The Base

The base (see Figures 3, 5 and 6) serves as a solid, waterproof support for the floor. It also helps to prevent hookworm larvae from entering. If properly made of a hard, strong material, it helps to keep burrowing rodents and surface water out of the pit. The pit lining will in most cases serve as a base although it may need to be strengthened at the ground surface.

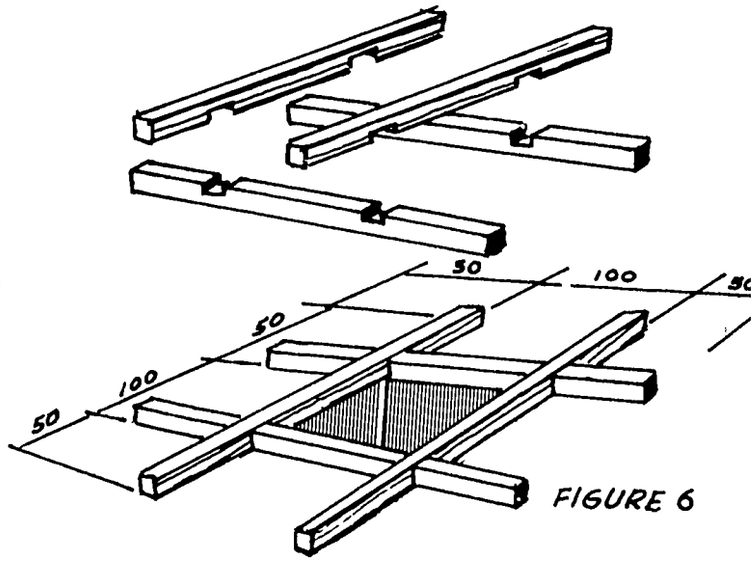

FIGURE 6

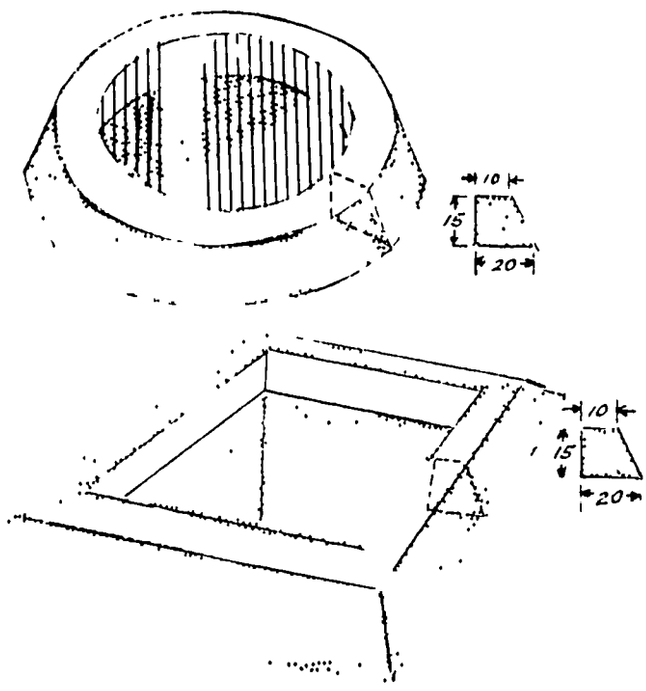

FIGURE 5

The Slab

A concrete water-seal slab is best. It is inexpensive but it means added labor and construction. A concrete open-hole slab is the next best, while a wooden floor is adequate. A built-up floor of wood and compacted soil is sometimes used but it is difficult to keep clean; as it gets soiled, it is likely to spread hookworm.

The concrete should not be weaker than 1 part cement to 6 parts of aggregate with a minimum of water. It should be reinforced with strips of bamboo about 2.5cm (1") wide whose weaker fibers have been stripped away. Soak the bamboo in water overnight before use.

Slabs (see Figure 7) are cast upside down in one operation. The footrests are shaped by removing part of the wooden form so as to make two separate indentations in the wood. Sheet metal is placed around the form so that the metal extends above the wood to the thickness of the slab. Side walls of

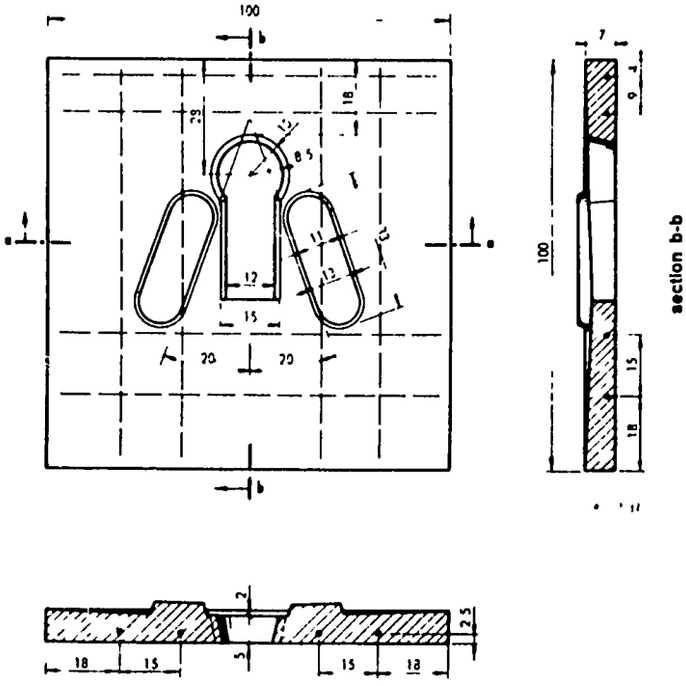

Measurements shown are in centimetres

FIGURE 7

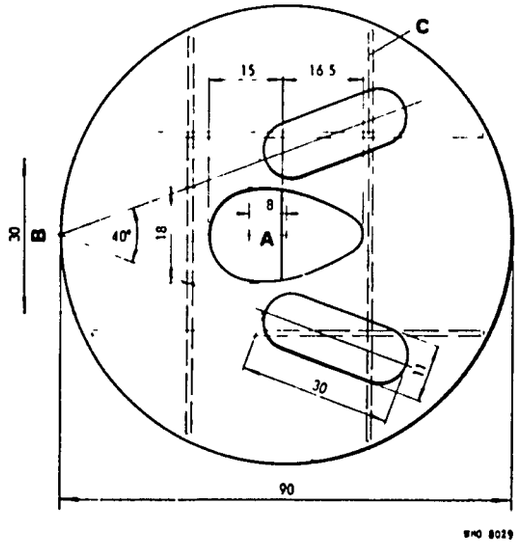

Measurements shown are in centimetres

A = Centre open hole 2.5 cm (1 in) back of centre if slab is 80 cm (31 in) in diameter, centre open hole 8.0 cm (3 in.) back of centre if slab is 90 cm (35 in) in diameter

B = Between back centre foot-rests

C = Reinforcement

Notes on construction of slab

Concrete for slabs should be not weaker than 1 part cement to 6 parts aggregate, with a minimum of water

Slab is reinforced with strips of bamboo of timber quality. Reinforcing strips are about 2 5 cm (1 in.) wide, have had inner, weaker fibres stripped away, and have been soaked in water overnight before use

Slabs are cast upside down in one operation. Base of form is of wood with indentations for foot-rests. Base of form is encircled by sheet metal strip which makes outer wall of form. Side walls of hole form and foot-rests are made with slight slope so as to come out easily Form for open hole is removed when concrete has taken initial set. Slabs are removed from form in about 40 hours and stored under water, preferably for 10 days or more. Since these slabs are round, they may be rolled some distance when conveyance is difficult.

the hole and footrests are made with a slight slope so as to come out easily. The form for the open hole is removed when the concrete first sets. Slabs are removed from the forms in about 40 hours and should be stored under water for 10 days or more.

Round slabs can be rolled some distance when carrying is difficult.

The Mound

The mound (see Figure 3) protects the pit and base from surface run-off which otherwise might enter and destroy the pit. It should be built up to the level of the floor and be very well tamped. It should extend 50cm (20") beyond the base on all sides. The mound may be built much higher than the ground in areas where protection is needed against floods and high tides. It will normally be built with earth removed from the pit or the surrounding area. A stone facing will help to keep it from being washed away by heavy rains. In front of the entrance door, a masonry or brick step can be built to help keep the floor clean.

Source:

Excreta Disposal for Rural Areas and Small Communities, by Edmund G. Wagner and J.N. Lanoix, World Health Organization, Geneva, 1958.

WATER PRIVY

A water (or aqua) privy uses a watertight tank in which human excreta and urine partially decompose. A sewer pipe connects the tank's overflow pipe to an underground drain area or seepage pit.

This is a sanitary and permanent installation when it is properly built, used daily and maintained properly. It can be placed near a building. The first cost of a water privy is high, but it is not expensive in the long run because it will be used for many years. It needs some water and cannot be used in freezing climates. The water privy may not be successful in rural areas with no organized sanitation and health education services.

The Process

The digesting or decomposing tank is usually made of watertight concrete (see Figures 8, 9 and 10). A drop-pipe, 10cm (4") in diameter, attached to the squatting plate or seat hangs down 10cm (4") below the surface of the liquid in the tank. This forms a water seal which keeps bad odors from rising into the privy shelter.

The decomposition process forms a sludge in the tank. The amount of sludge is only one-fourth the volume of the total waste deposited in the pit, because some of the solid matter breaks down into very small pieces, liquid and gas. The liquid and the pieces of waste matter run out the overflow pipe to the drain field. The material which flows out is called effluent. The gas escapes through a vent pipe.

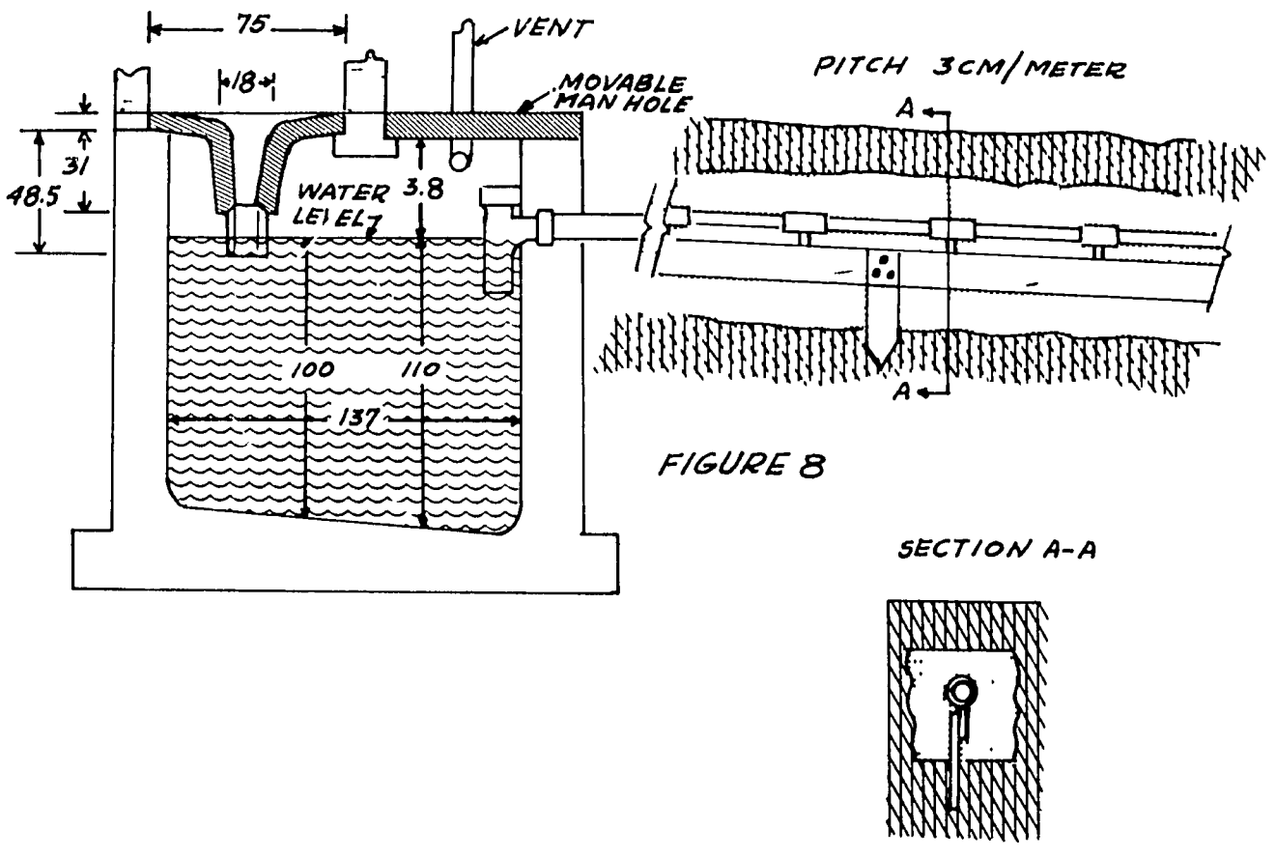

FIGURE 8

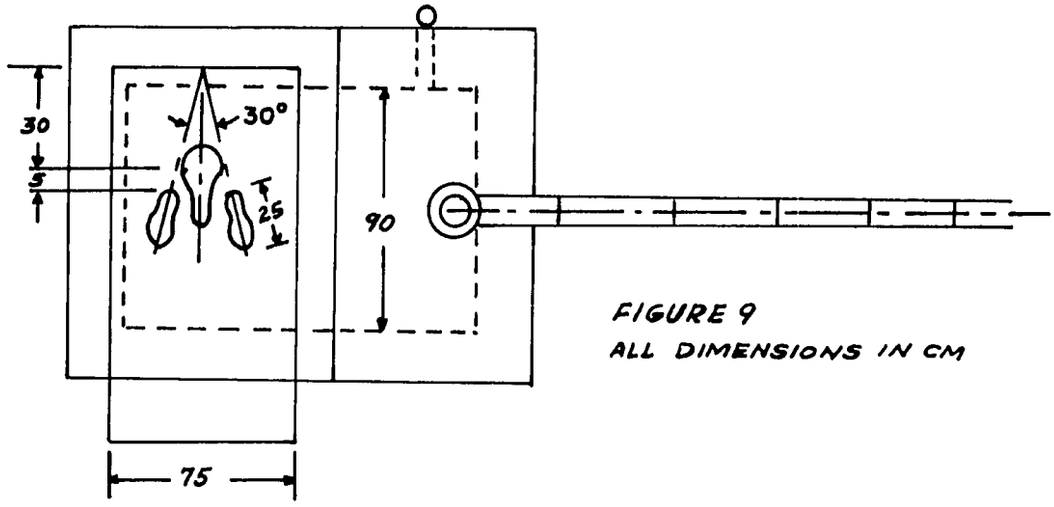

FIGURE 9
ALL DIMENSIONS IN CM

The Tank

The tank must be watertight. If the tank leaks, the liquid level will fall below the drop pipe, odors will form, flies and mosquitos will breed, and the soil and ground water will be polluted. Tanks made from bricks or stone and mortar must be faced with a coat of rich cement plaster to make sure they are watertight.

The tank can be made of plain concrete sewer pipes 90 or 120cm (36" to 47") in diameter and sealed at the bottom with concrete (see Figure 10).

Family-sized units should not be less than 1 cubic meter (35 cubic feet), which will usually allow 6 years or more between cleanings. Thus the family water privy need not be too deep, which is an advantage in rocky ground where the water table is high.

Drop-Pipe

The 10cm drop-pipe with its end 10cm below the surface, prevents water from splashing and improves flushing. Nightsoil may stick in the pipe from time to time and must be flushed or poked down to stop odors and to keep flies from breeding. The pipe may be up to 20cm (8") in diameter and reach 20cm below the surface of the water in the pit, which will prevent sticking, but this size will release more odors and cause splashing, and the pipe may crust over.

Disposal of Effluent

Disposal of effluent from a family unit is usually done in seepage pits or by below ground irrigation. The amount of effluent is equal to the amount of nightsoil and water put into the digesting pit. This averages 4.5 liters a person each day, but the drainage system should be designed to handle 9 liters a person each day. When a water tap is inside the privy, the effluent disposal system must be much larger. Too much water causes poor digestion of sludge.

The area of below ground irrigation ditches or seepage pits needed for a family of five will be from 1.4 square meters (10.7 square feet) in

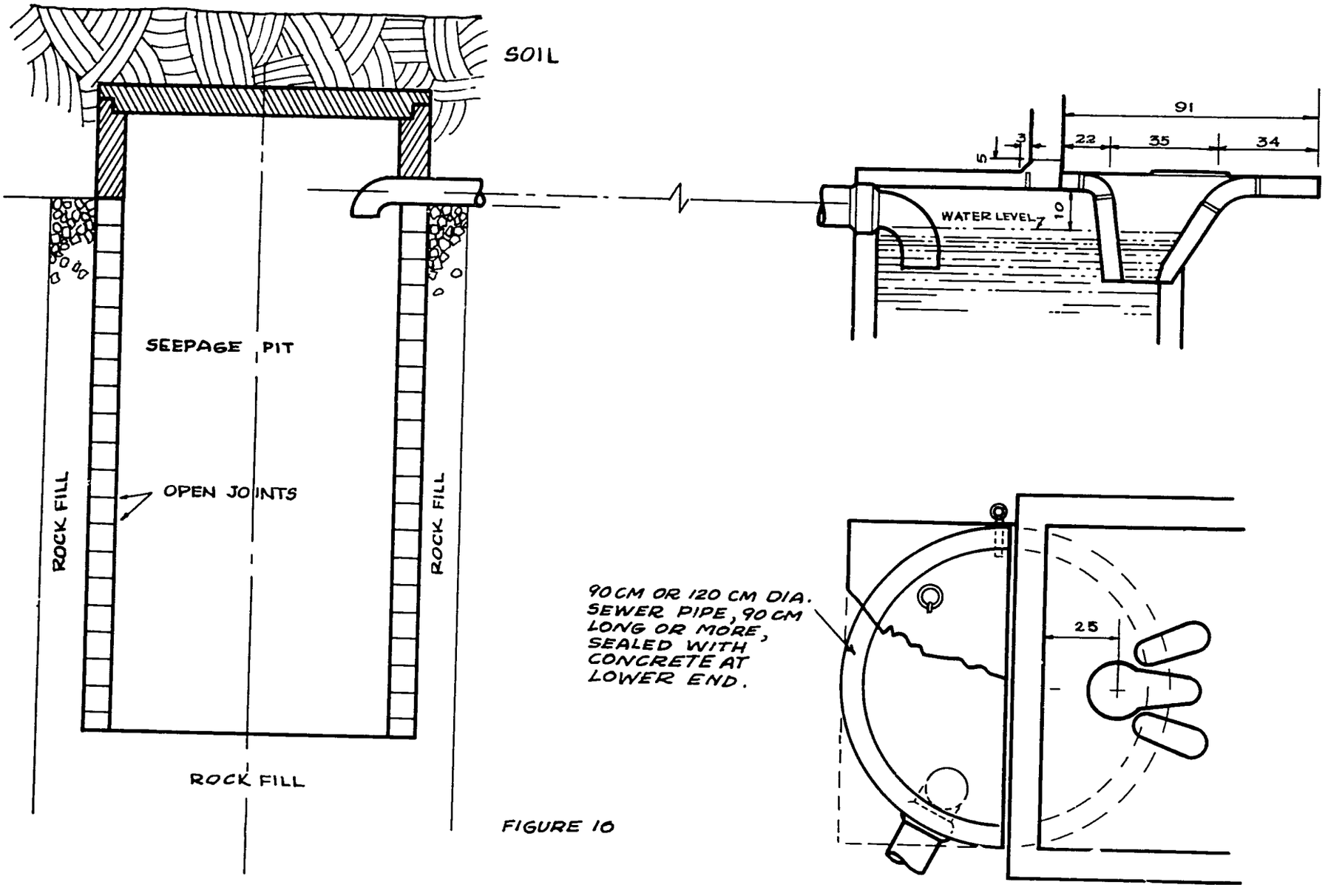

FIGURE 10

Not in Scale
Dimensions in cm.

very light soil to 5 square meters (53 square feet) in soils that are hard to penetrate.

These methods are not practical in regions where the water table rises to within 1m (3') of the ground surface, or in clay soils or swampy land. Here some type of sand filter may help, but this requires help and approval from local health experts and continued maintenance.

Operation

The first step in putting a new water privy into operation is to fill the tank with water up to the overflow pipe. Digested sludge from another privy can be added to the tank; this will seed the water and start the decomposition process. If the tank is not seeded, it will take about 2 months for the process to get going efficiently. Once this level of operation is reached, the privy will keep the process going, provided it is used daily. Cleaning and flushing the slab and bowl daily with 25 to 40 liters (6 to 10 U.S. gallons) will give the tank the small amount of water it needs to keep the process going.

Removing Sludge

The sludge which forms in the tank must be bailed out before the tank is half-full, about 6 to 8 years after the privy is put into operation. A manhole, often located outside the shelter, is made for this job.

Notice in Figure 8 that the tank floor slopes toward the manhole for easier cleaning. Both the vent and the drain are easily reached. The drain has a T-shaped section which helps to keep hard surface scum from entering and plugging the drain and whose shape makes it easy to clean. The overflow pipe in Figure 10 is an elbow.

Bury the sludge in shallow trenches about 40cm (16") deep.

Source:

Excreta Disposal for Rural Areas and Small Communities, by Edmund G. Wagner and J.N. Lanoix, World Health Organization, Geneva, 1958.

PHILIPPINE WATER-SEAL LATRINE

A water-seal bowl improves a latrine by keeping flies out of the pit and preventing odors from escaping. The mold described here (see Figure 11) has been made and used successfully in sanitary latrine programs in the Philippines. The advantage of this mold over a concrete mold is that its manufacture requires no drying time.

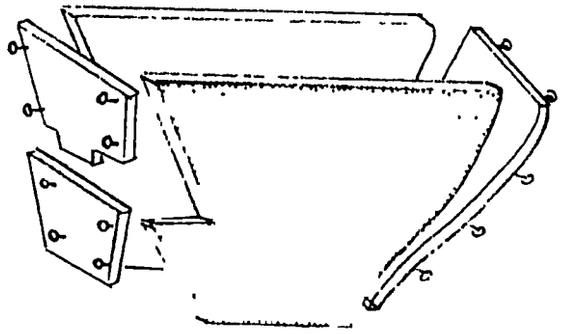

FIGURE 11

Tools and Materials

Wood: 19mm (3/4") thick, 31cm (12 1/4") wide and 152.5cm (5') long
Galvanized iron: 0.75mm x 32cm x 40.5cm (1/32" x 12 1/2" x 16")
Large nails: 18
Cement and clean sand
Galvanized wire: 5mm (3/16") in diameter and 30.5cm (1') long, for interior mold handle
Bamboo pole or iron rod: 30.5cm (1') long, to position interior mold

Making the Mold

If the materials for the mold are cut according to Figures 12 and 13, the bowl is easy to make.

1. Nail the metal sheet around the curved back of the mold (see Figure 11).

2. Attach the two front pieces with large nails through the loose-fitting holes. These holes make it easy to remove the front pieces. The extension at the bottom of piece No. 1 is important in making sure that the bowl will seal well below the water level.

Making the Bowl

Since the mold has no bottom, find a flat place to work where the mold can be propped against a wall. Fill the mold with a mixture of two parts fine sifted sand to one part cement.

Use only enough water to make the mixture workable. Pack it in so that there are no airpockets. Let it set for 15 to 20 minutes until the mixture is stiff. Next, with a ruler, measure a 38mm (1 1/2") wall around the top and outlet and dig out the inside with a tablespoon (see Figure 14).

Keep a straw handy to gage the thickness of the walls of the bowl while digging, because it is difficult

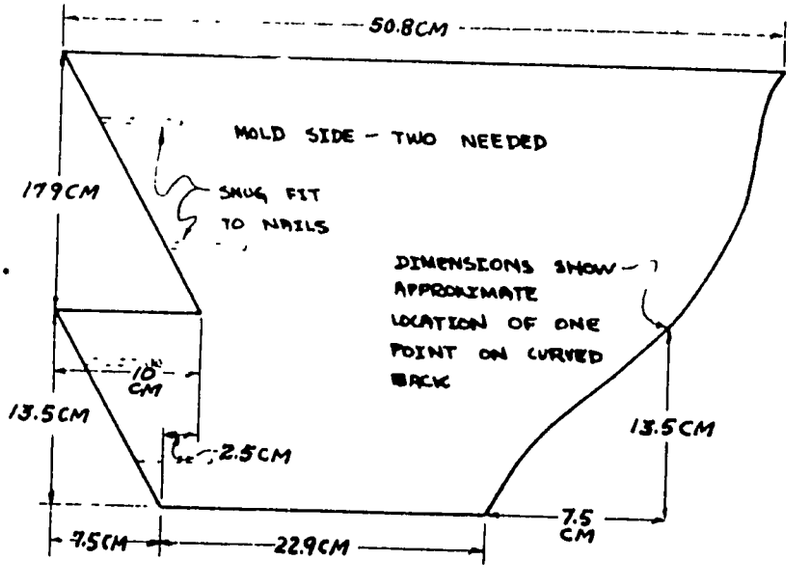

FIG.12

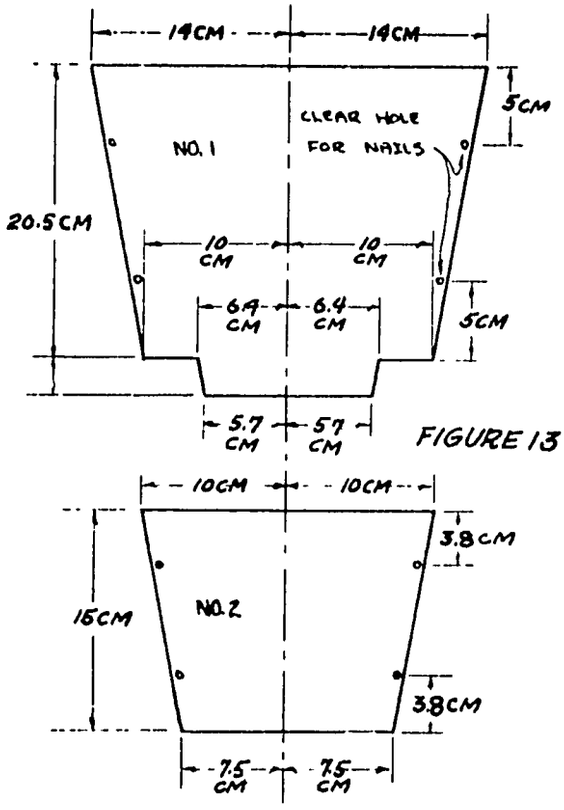

FIGURE 13

to judge otherwise.

Dig out the large interior first, then the outlet. The finished interior of a bowl is shown in Figure 15.

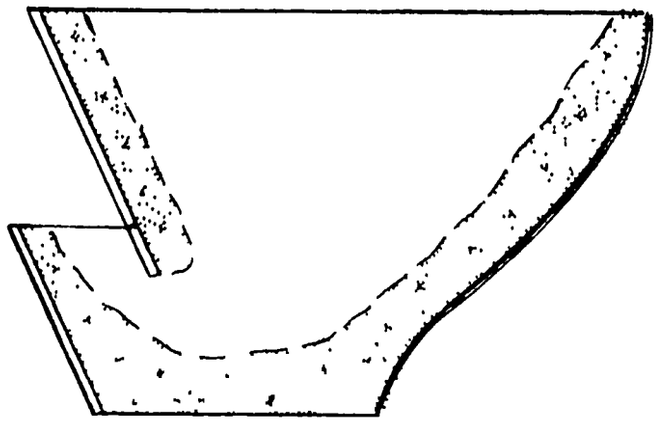

FIGURE 15

Be sure you can insert three fingers vertically, 5cm (2"), through the hole leading to the outlet. Be careful to release front piece No. 1 by inserting the spoon around the edges (see Figure 16).

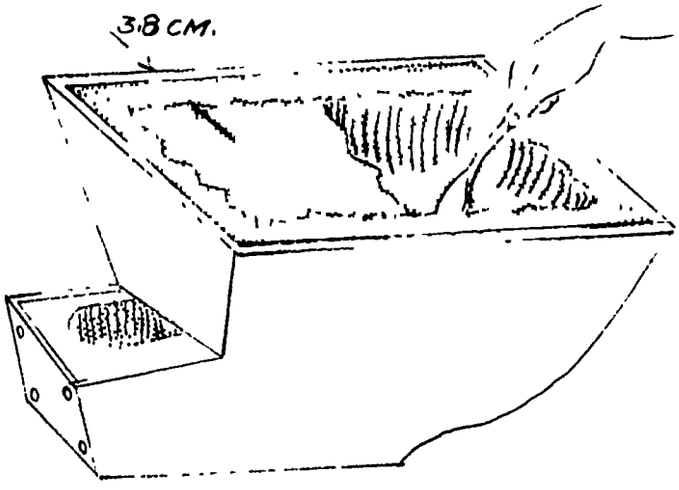

FIGURE 14

After the interior has been dug out, the walls will have slumped down about an inch. Use the cement taken from the interior to build the walls back up; then smooth all exposed surfaces with the back of the spoon as in Figure 17. To be completely sanitary, the bowl must be as smooth as possible so that germs cannot accumulate in crevices.

For a finishing coat, one of two methods may be used: (1) immediately after smoothing, sprinkle dry cement over the still wet surfaces and smooth again with the spoon; or (2) let the bowl set for half an hour and apply a mixture of pure cement and water -- a coconut husk brush is good enough. Either method gives good results. See Figure 17.

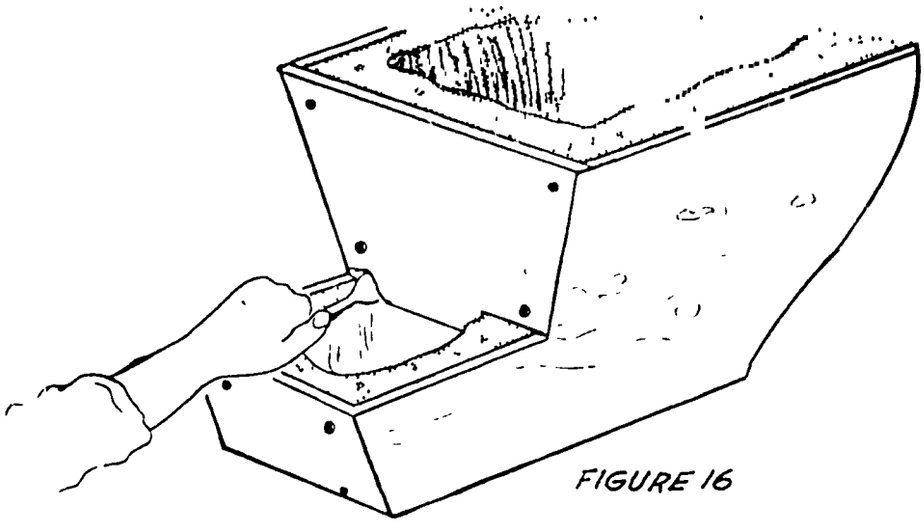

FIGURE 16

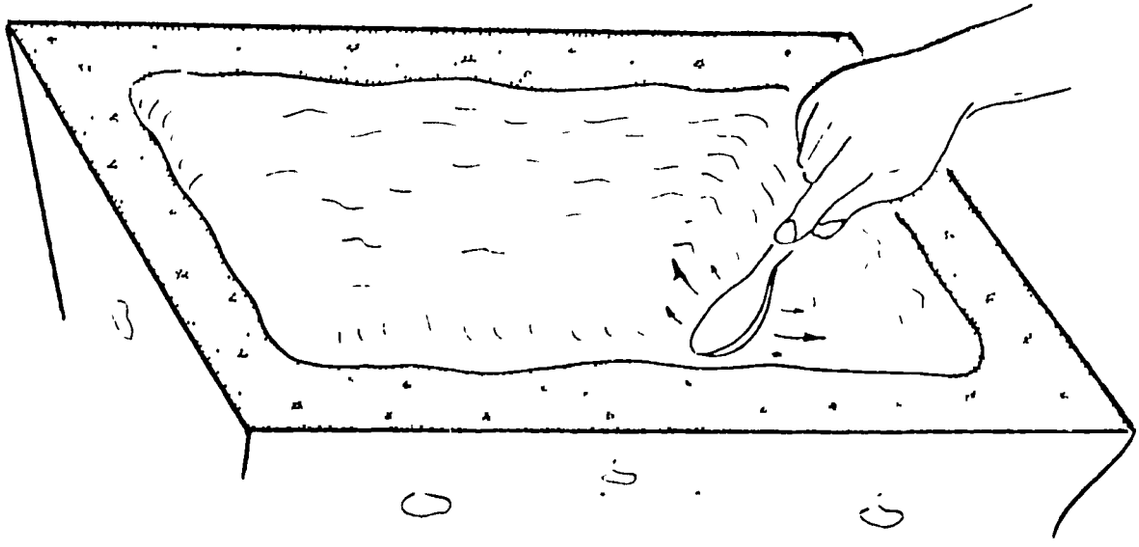

FIGURE 17

For a luxury product, use white or red cement for the finishing coat; several coats are necessary.

The finished bowl should be left in the mold to dry 48 hours. It can be removed after 24 hours only if extreme care is taken. Pull out the front nails and remove pieces No. 1 and No. 2; pull the sides and back away from the bowl.

Making an Interior Mold

Because digging by hand is tedious and because it must be done very carefully to make the walls consistently thick, it is better and faster to use an interior mold.

After the first bowl has hardened thoroughly, fill the outlet with dry sand so that the cement cannot

flow into it. This would make it impossible to remove the interior mold when it hardens (see Figure 15). Line the large interior with paper and fill it with cement -- a 4 to 1 sand-cement ratio is good enough. Insert a heavy wire loop in the top so that the interior mold can be positioned on the exterior mold with an iron bar or bamboo pole.

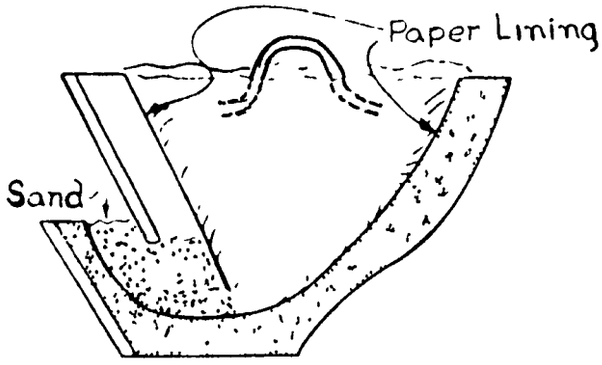

FIGURE 18

When an interior mold is used, it is only necessary to dig out the outlet. It is a good idea to have several interior molds, but not necessary to have one for each exterior mold. The interior mold should be removed after 15 to 20 minutes so that the bowl can be smoothed and finished. Then it can be used to make the next bowl.

Using the Interior Mold

To use the interior mold, fill the wooden mold about 12.5cm (5") from the bottom and insert the interior mold in the correct position. See Figure 16. Push the cement around the mold with a stick and pack it well to get rid of air spaces. After the molds are removed, the finished bowl should be left to dry until it is rock hard -- a week is usually safe -- before delivery.

A sand-cement ratio of 2 1/2 to 1 has been used successfully with the bowls. A ratio wider than this may be too much of a sacrifice of strength for profit; customers may be dissatisfied and sales may drop. There are many ways to strengthen cement; experiments may bring a cheaper and better profit. One possibility is to add short coconut husk or abaca fibers.

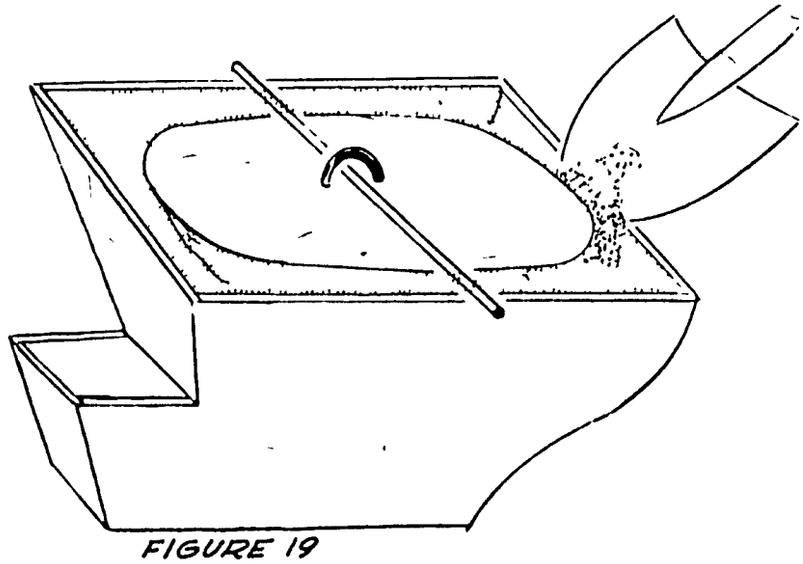

FIGURE 19

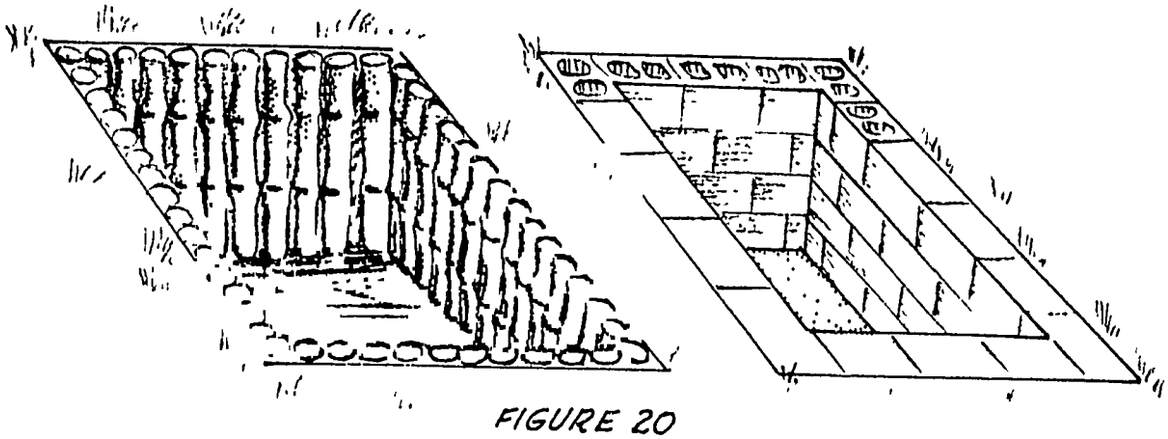

FIGURE 20

Installing the Toilet

For use in private homes, dig a pit about 1.5m (5') deep and 1m (3') square. The deeper the pit and the smaller the width the better, since a small slab is cheaper (see "Pit Privy" Section). It can even be dug under the house -- especially in cities -- because the toilet gives off very little odor, unless of course this position endangers the household water supply. The pit may be lined or unlined, depending upon the soil. Hard clay soil need not be lined. But, if the house is near the sea or on sandy soil, the pit should be lined with, for example, bamboo poles or hollow blocks as shown in Figure 20.

Place boards around the outside of the pit 15cm (6") from the edge of the pit to form the perimeter of the slab (see Figure 21). Place large pieces of bamboo split in half across the pit as a base for the slab. Place the bowl between two of the

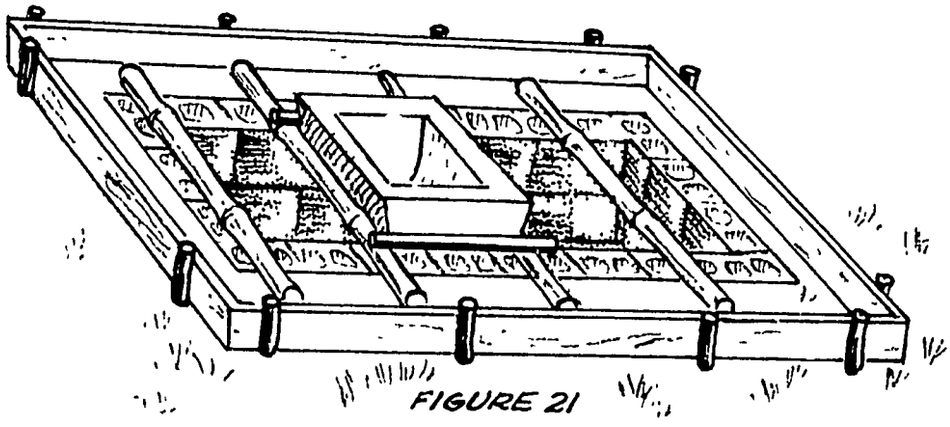

FIGURE 21

bamboo pieces with a piece of wood under the front and back; nail these to the bamboo. After the bowl is positioned in this way, pour water into it to be sure it will seal off the outlet. The top of the bowl should be 7.5cm (3") above the bamboo base.

Now put bamboo slats across the pit at right angles to the large pieces of bamboo, completely covering the pit. Cover this with several thicknesses of newspaper. Pour cement around the bowl until the slab is about 5cm (4") thick. A mixture of two kerosene cans of gravel, two of sand and one of cement is good. The slab can be reinforced by placing bamboo slats between two layers of cement. Make sure that the outer edge of the slab is higher than the bowl and slants toward the center, so that the toilet can be easily cleaned. Apply a finishing coat of pure cement to the slab. Many people prefer to add foot rests and urine guard--there is room for imagination.

It is extremely important to have an ample water supply at hand. About 1 liter (1 quart) of water is needed to flush the toilet, and people will be discouraged from using the latrine properly if they have to go some distance for water. It is a good idea to have an oil drum or a small cement tank nearby to supply water for the latrine.

Do not use the latrine for at least 3 days -- a week is best -- after it is installed.

A pit with the suggested dimensions should last a family of eight about five years. One person uses about 28 liters (1 cubic foot) a year.

Source:

"Campaigning for Water-Sealed Toilets," by Gordon Zaloom, Peace Corps Volunteer.

THAILAND WATER-SEAL PRIVY SLAB

The Thailand Water-Seal Privy Slab, made from concrete, is useful for large-scale privy programs. The slab, which includes a bowl and trap, is used to cover an ordinary pit privy. It comes from a long-established privy program in Thailand.

Master molds for the bowl and trap are used to make secondary molds from which the bowl and trap are actually made. The master molds can be made from the plans in the entry which follows. The master molds can sometimes be purchased from local health officers. In Thailand, they can be purchased from the Village Health and Sanitation Project, Ministry of Public Health, Bangkok.

The finished slab is quite strong because its three parts are cast at the same time (see Figure 10). The method described here can be applied to other water-seal slab designs.

Tools and Materials

Master molds
Materials for making concrete
Wood for platform forms
Reinforcing rod and wire
Clay
Crankcase oil
Beeswax and kerosene (optional)
Steel bars: 19mm x 19mm x 7.5cm (3/4" x 3/4" x 5")

The basic method for making these water-seal slabs is to cast the slab, bowl, and water-seal trap using three forms:

1. A wooden form for shaping the slab (see Figure 6).

2. A concrete bowl core for shaping the inside of the bowl (see Figure 3).

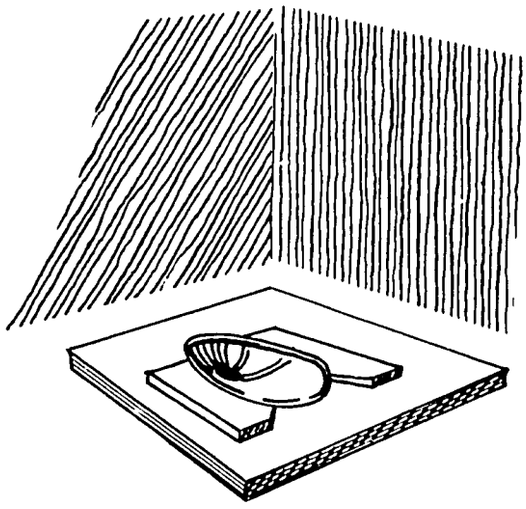

FIGURE 1
SKETCH OF FINISHED PRIVY.

3. A concrete core for shaping the inside of the water-seal trap (see Figure 9).

The water-seal trap is curved back under the bowl as shown in Figure 2a.

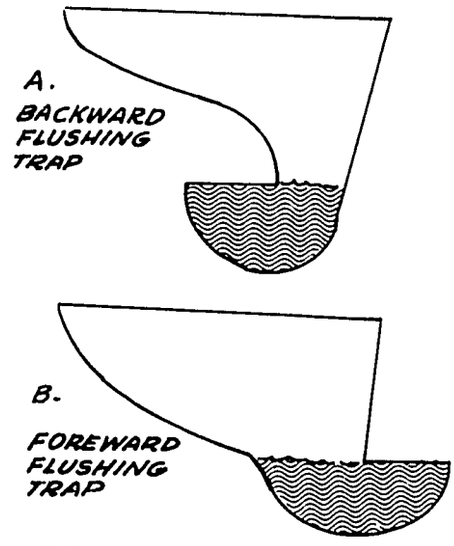

FIGURE 2. WATER SEAL TRAPS

This makes flushing more difficult, but prevents erosion of the back of the pit on loose soil. The same general method could be used to make a forward flushing trap (see Figure 2b).

The forms used when making a slab must stay in place until the concrete is strong enough, usually 24 hours. For this reason, many sets of forms are necessary if a reasonable number of slabs are to be cast every day. Here is where the three master molds are needed: one of them to cast the bowl core, and the other two to cast the trap core (see Figures 14 and 18).

Casting the Bowl Core

1. Oil the inside of the master bowl mold and insert a 19mm x 19mm x 7.5cm (3/4" x 3/4" x 5") steel bar into the bottom.

2. Add a fairly loose mixture of cement and water, called neat cement, to a depth of about (6"). Then fill to brim with a 1:1 cement-sand mixture. The 1:1 should be firm, not runny, and should be laid into the loose neat cement without stirring to insure a smooth finish on the bowl core.

3. After the bowl core has become firm enough, scoop a depression into the surface to install two steel hooks made from the reinforcing rod. They should be about 22.5cm (9") apart, and should not protrude above the surface of the concrete. See Figure 3.

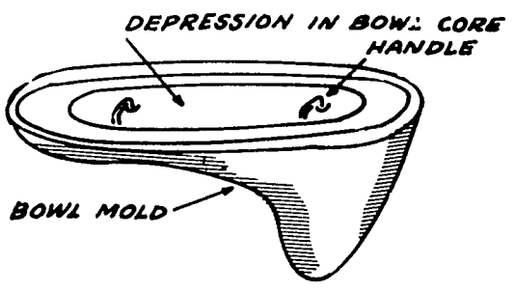

FIGURE 3 BOWL CORE HANDLES

4. Let the concrete set at least 24 hours before removing the bowl core from the master mold. The bowl core can be used to make another master mold and the master mold can be used to make more cores.

Casting the Trap Core

1. Add about 2.5cm (1") of 1:1 cement-sand mix to the oiled trap master mold and put in some wire for reinforcing. Then fill it with 1:1 almost to the brim. See Figure 4.

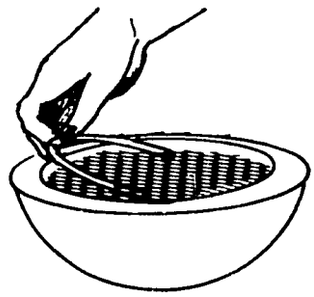

FIGURE 4 REINFORCING THE TRAP CORE

2. Put the oiled insert mold into place and scrape off excess. See Figure 5.

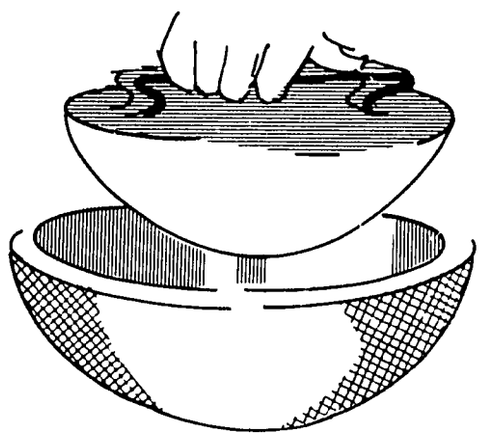

FIGURE 5 PLACING THE INSERT MOLD

3. After 45 minutes, remove the insert and put a square sheet metal pipe 19mm (3/4") high into the cubical indentation left by the insert. The pipe is made by wrapping sheet metal around a 19mm x 19mm (3/4" x 3/4") steel bar. Let the concrete dry in the mold for 24 hours.

4. Remove the finished trap core by tapping the master mold gently with a wooden block.

Making the Wooden Slab Form

1. Make a wooden platform 90cm x 90cm (35 1/2" x 35 1/2") out of 2.5cm (1") thick planks.

2. Cut out of the platform a hole 10cm x 33cm (4" x 13") for the hooks of the bowl core to extend into. The back of the hole should be 28cm (11") from the back of the platform. To determine the location of this hole, draw the outline of the bottom of the bowl on the platform, with the back of the bowl outline 23cm (9") from the back of the platform. (See Figure 6.) The back of the hole should be 28cm (11") from the back of the platform.

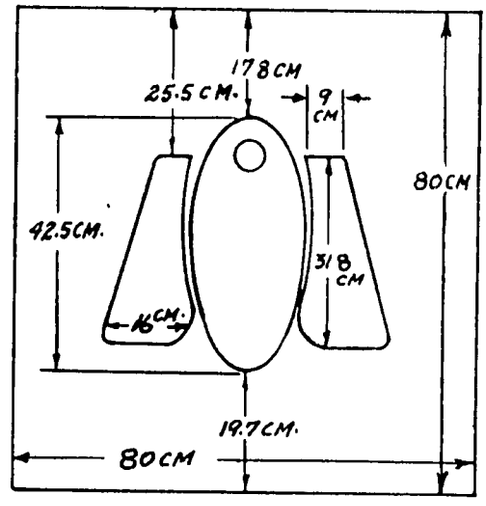

FIGURE 6 PRIVY SLAB OUTLINE

3. Using 38mm x 38mm (1 1/2" x 1 1/2") wood, make a frame with inside dimensions of 80cm x 80cm (31 1/2" x 31 1/2"). (See Figure 7.)

4. Gouge out the footrests with a wood chisel. The inside of the footrests should be about 12.5mm (1/2") from the outline of the bowl.

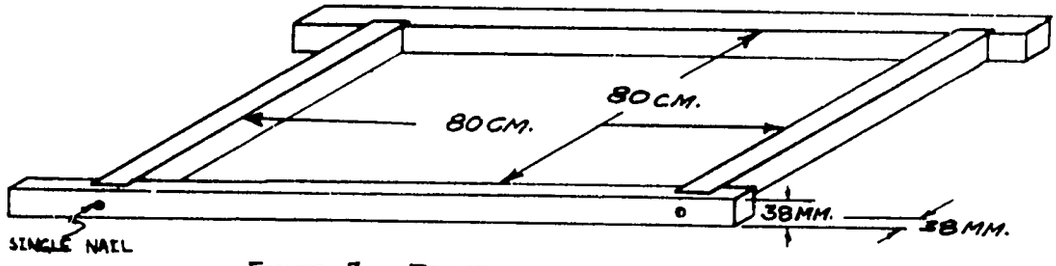

FIGURE 7 FRAME

Casting the Slab

With these three forms finished, you are ready to cast the first water-seal slab.

1. Use a paintbrush to coat the bowl core and the trap core with a layer of wax about 3mm (1/8") thick. Prepare the wax by dissolving 1kg (2.2 pounds) of melted beeswax in 0.5 liter (1 pint) of kerosene. The wax coating will last 5 to 6 castings adding U.S. $0.01 to the cost of each slab. Wax makes removing the cores much easier, but it is not absolutely necessary. Let it dry before oiling.

2. Place the bowl core on the wooden slab form and fill all cracks with clay. See Figure 8.

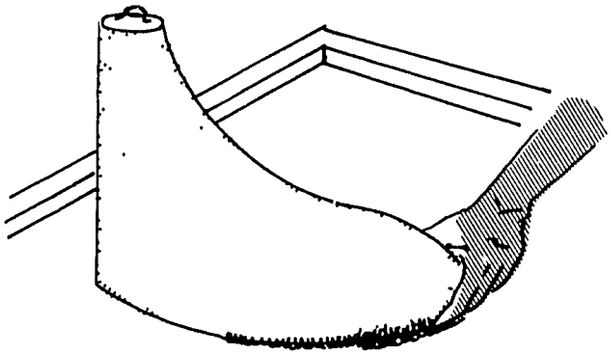

FIGURE 8. SEALING CRACKS WITH CLAY.

3. Oil the bowl, platform and frame.

4. Apply a 6mm (1/4") thick coat of pasty cement and water mixture to the bowl core and platform. (Many Thai people prefer to spend U.S. $0.25 more for an attractive polished slab. To do this, instead of using a mixture of cement and water, use a mix of 5 cement: 5 color: 1 granite chips. After the forms are removed, polish with a carborundum stone and plenty of water.)

5. Cover the bowl core with a 1:2 cement-sand mixture to a total thickness of 12.5mm (1/2"). Make a smooth lip on the cement 10mm (3/8") from the top of the bowl core as in Figure 9. This lip is your water seal. Use fairly dry cement and let it set for 15 minutes before cutting this lip.

6. Place the trap core on the bowl core and seal the crack with clay. Also add a little clay on each side of the form (near the thumb in Figure 9) to prevent cement from getting to the front lip.

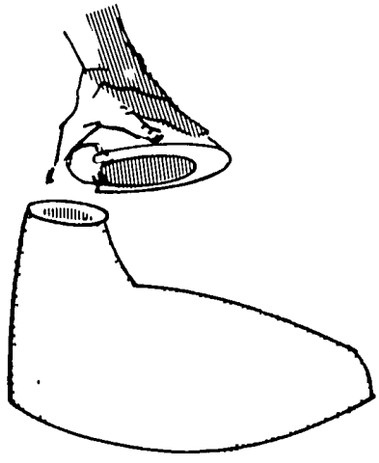

FIGURE 9. MOUNTING THE TRAP CORE.

7. Cover with 1:2 cement-sand mixture to a thickness of 12.5mm (1/2"). Do not exceed the 12.5mm (1/2") thickness below the trap core or you will not be able to remove this core.

8. Fill the slab form with a mixture of 1 cement: 2 sand: 3 clean gravel or crushed rock almost to the top. In preparing the concrete, first mix cement and sand, then add gravel and water. Use water conservatively. The looser the mix-

ture, the weaker the concrete will be.

9. Press in 4 pieces of 6mm (1/4") steel reinforcing rod. See Figure 10.

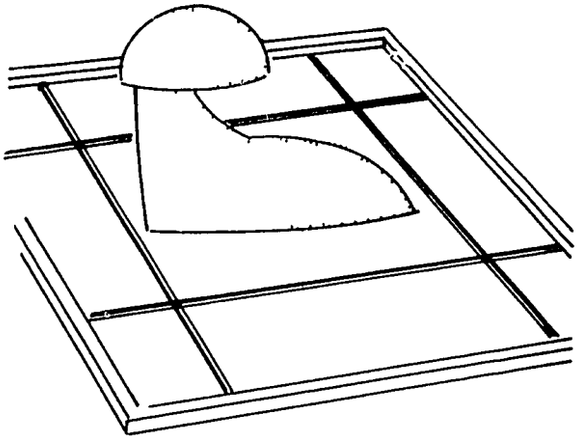

FIGURE 10 PLACING REINFORCING ROD.

10. Fill to top of frame and smooth. Allow at least 24 hours for setting.

11. Remove the frame by tapping lightly with hammer.

12. Turn the slab form over on a wooden stand and use simple levers to remove the bowl core. You must remove the bowl core before the trap core. See Figure 11.

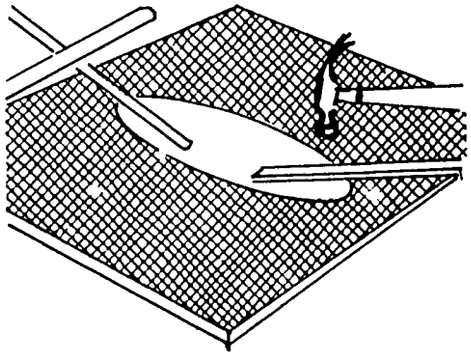

FIGURE 11. REMOVING THE BOWL CORE.

13. Tap the trap core gently and slip it out. Add a little water and check to see if your seal is 10mm (3/8").

14. Keep the slab damp and covered for a minimum of 3 days and preferably a week to gain strength.

Source:

Thailand's Water-Seal Privy Program, by Barry Karlin, MPH, Sanitation Advisor, USOM/Korat, Thailand.

MASTER MOLDS FOR THE THAILAND WATER-SEAL PRIVY SLAB

This entry describes how to make the three master molds from which cores can be cast. The cores in turn are used for casting Thailand Water-Seal Privy Slabs.

Tools and Materials

Cardboard
Materials for making concrete
Steel rod, 19mm (3/4") square
Sheet metal (tin-can metal is satisfactory)
Reinforcing wire
Clay
Oil (used crankcase oil is satisfactory)
Paint brush

Making the Master Molds

It may be necessary to make master molds rather than to purchase them. Study the entry "Thailand Water-Seal Privy Slab" before starting to make these master molds:

1. The Master Bowl Mold,
2. The Master Trap Mold, and
3. The Trap Mold Insert.

Making the Master Bowl Mold

1. Cut out profiles of the bowl outline from Figure 13, which is full size.

2. Shape a mound of clay using the carboard profiles as a guide.

3. Form a little square pipe, 19mm (3/4") long, of sheet metal on the 19mm (3/4") square steel rod. Make several of these as they will be used later when casting the cores. Fill the square pipe with clay and press it into the top of the clay mound a little bit. This will be used later to "key" the cores together. See Figure 12.

4. Use a paint brush to paint the clay mound with oil; old crankcase oil is fine.

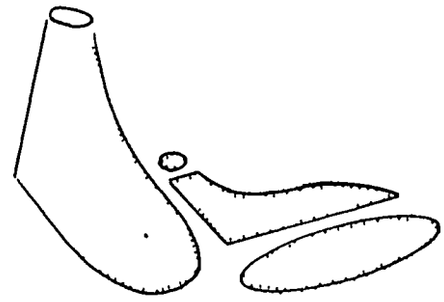

FIGURE 12 CLAY MOUND

5. Cover the clay mound with a stiff mixture of cement and water to a thickness of 12.5mm (1/2"). If the clay mound was properly prepared, the inside finish of the bowl mold will need no further smoothing.

6. After this cement has set 30 minutes, build up the thickness to 38mm (1 1/2") with 1:1 cement-sand mix. Let this set 24 hours and carefully lift the finished master bowl mold from the clay mound. The finished bowl mold is shown in Figure 14.

Making the Master Trap Mold

1. Make cardboard profiles of the trap from Figure 17, which is full size. Shape the outside of the trap from clay, and let it harden overnight.

2. Shape the under side by hand with a trowel using Figure 15 and the insert profile from Figure 17 as guides. Mark the location for a 19mm (3/4") square metal pipe by holding the clay trap over the clay mound used to shape the bowl mold, and letting the square sheet metal cube mark the trap.

3. Insert the sheet metal pipe into the clay trap and scoop out the clay

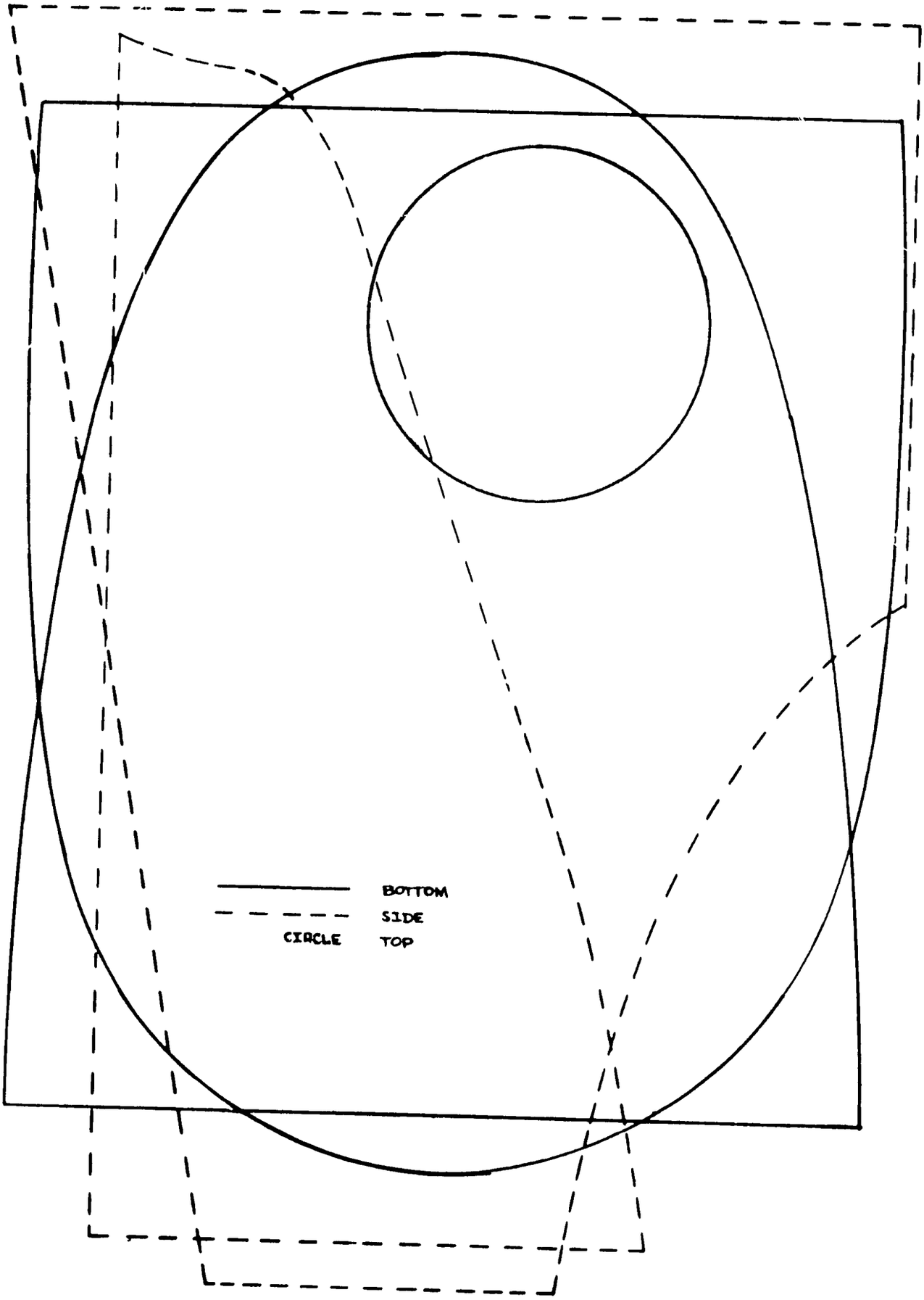

FIGURE 13 PROFILES FOR MAKING MASTER MOLD FOR BOWL (FULL SIZE)

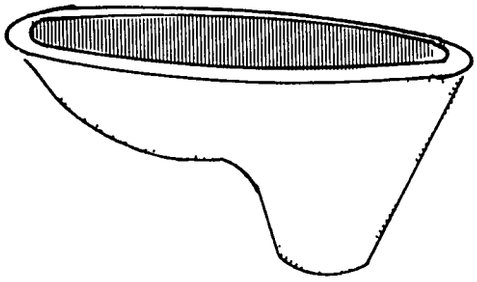

FIGURE 14 BOWL MOLD

from inside. See Figure 15. Check the clay trap on the bowl mound again to be sure it lines up properly.

4. Oil the clay trap.

5. Put a heel-shaped piece of clay under the clay trap and trim the sides. This will prevent the cement from running under the mold. See Figure 16.

6. Cover with cement and water to 19mm (3/4"), add steel reinforcing wire, and cover with 19mm (3/4") more of 1:1 cement-sand mixture.

7. Flatten the top and insert wire handles. Let it set at least 24 hours. This completes the master trap mold.

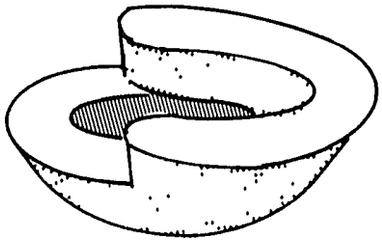

FIGURE 15. CLAY TRAP

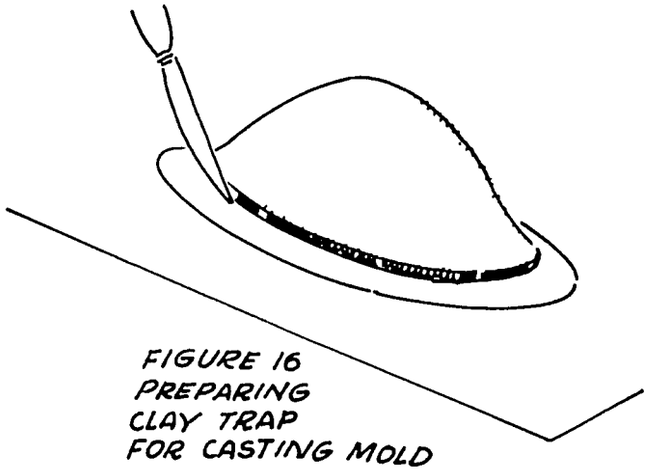

FIGURE 16 PREPARING CLAY TRAP FOR CASTING MOLD

Making the Trap Mold Insert

1. Turn the master trap mold over carefully, and remove the heel-shaped clay plug.

2. Oil all inner surfaces and fill to the brim with 1:1 cement-sand mix.

3. Insert a small wire handle and let the concrete set for at least 24 hours before separating the finished molds.

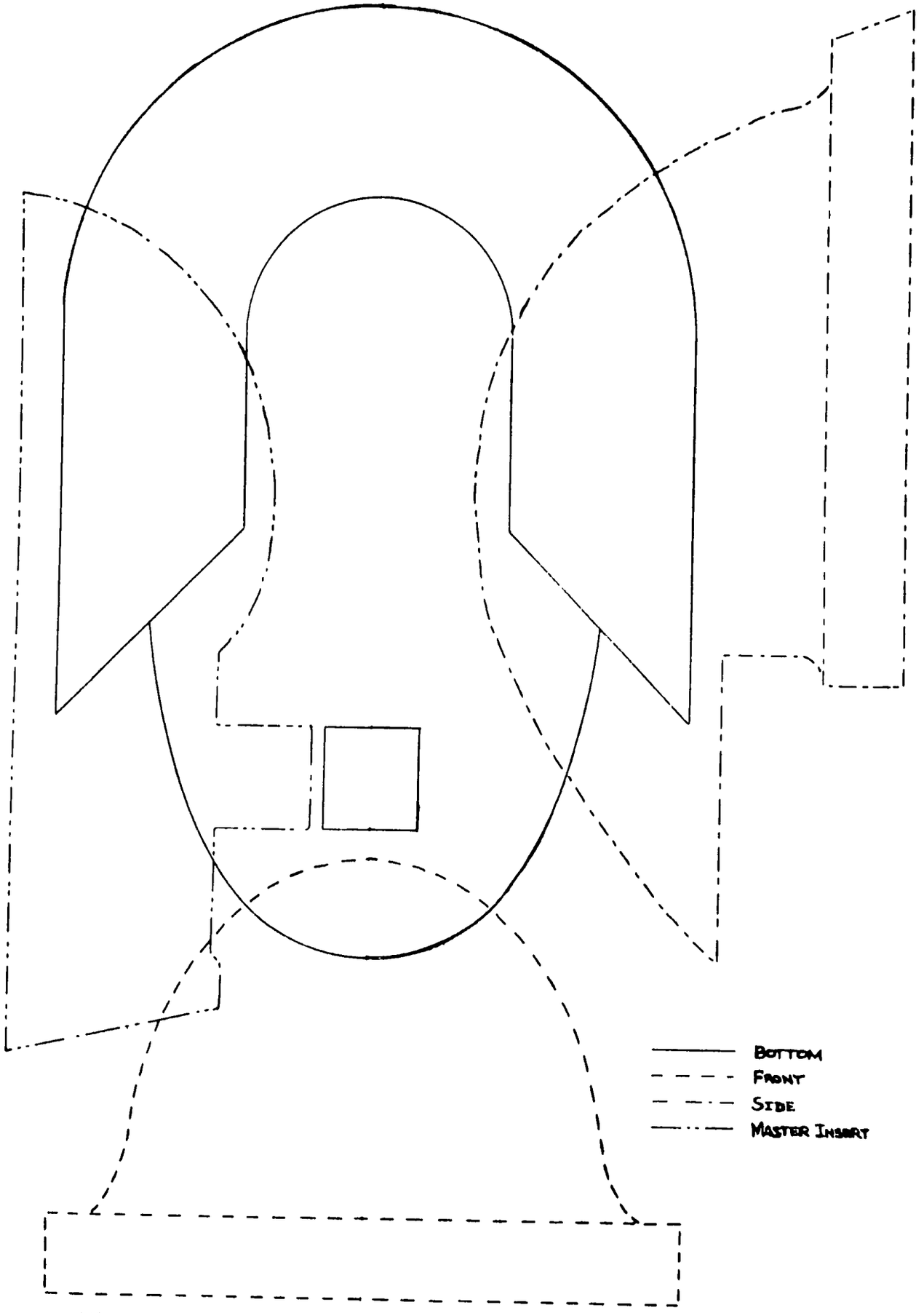

FIGURE 17. PROFILES FOR MAKING MASTER MOLDS FOR TRAP (FULL SIZE)

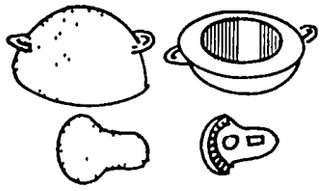

FIGURE 18. TRAP MOLD AND INSERT

Source:

Thailand's Water-Seal Privy Program, by Barry Karlin, MPH Sanitation Advisor, USOM/Korat, Thailand.

Figure 18 shows the completed master trap mold and insert.

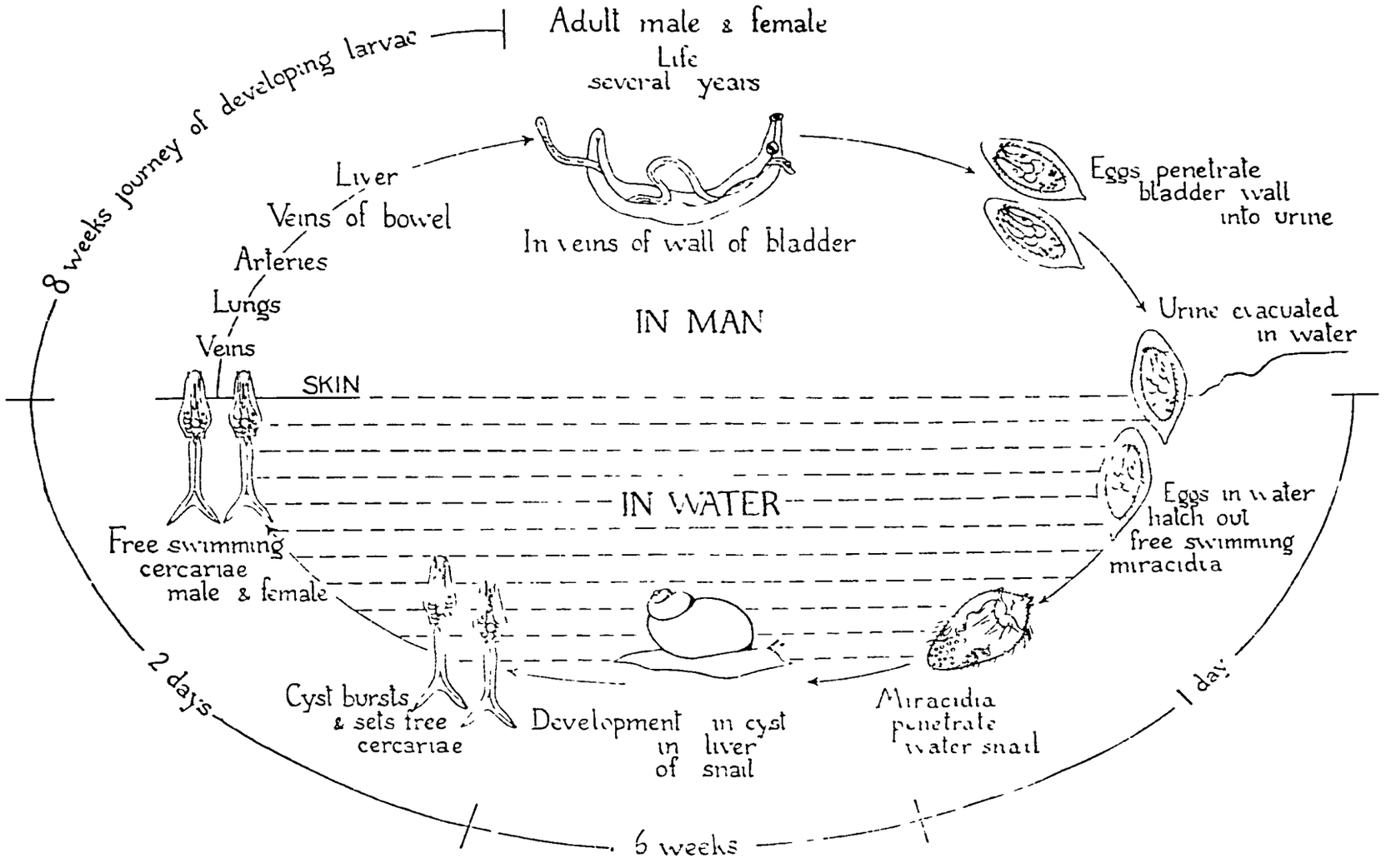

FIGURE 1 —The life cycle of *Schistosoma haematobium* (Bilharzia). A blood fluke.

Bilharziasis

Bilharziasis (also called schistosomiasis) is one of the most widespread human diseases caused by parasites. This entry explains in general terms what is necessary for personal protection from bilharzia and for ridding an area of the disease. Further information from the references given is needed. Cooperation with government or other programs is essential.

An estimated 150 to 250 million people suffer from the disease. It is found in much of Africa, the Tigris and Euphrates valleys, parts of Israel northern Syria, Arabia, Iran, Iraq, parts of Puerto Rico, Venezuela, Dutch Guiana, Brazil, Lesser Antilles, Dominica, Taiwan and parts of China, the Philippines, Japan and a few villages in southern Thailand.

The Parasites

A basic understanding of the life cycle of the parasites, called schistosomes, and the characteristics of each phase is the first step in preventing the disease (see Figure 1.)

The disease has been found, besides in man, in baboons, monkeys, rodents, water buffalo, horses, cattle, pigs, cats and dogs. When water is contaminated by urine or feces from a victim of the disease, the eggs contained in these hatch out larvae which penetrate certain types of fresh-water snails. In the snail host, the larvae develop into cercariae which work their way out of the snail and become

free-swimming, this is the form which infects man. It can survive in water for a few days under favorable conditions.

The disease is contracted by contact with water containing cercariae. Typical ways are bathing, drinking, washing teeth, washing pots and clothes, walking through water, irrigating and cultivating crops. Once the parasite has contacted a host, 5 minutes may be enough for it to penetrate the skin.

It is important to note that bilharziasis cannot be passed from human to human; it depends on the snail intermediary. A victim must live in or have visited an area where the parasite is found.

Symptoms

At the spot where the parasite penetrates the host, a red itching eruption lasting several days usually develops. After the host is infected, symptoms relate particularly to the large bowel, the lower urinary tract, liver, spleen, lungs and the central nervous system. The most characteristic symptoms are bladder and colon irritation, ulceration and bleeding. Three to twelve weeks after infection, a victim will likely develop fever, malaise, abdominal pain, cough, itchy skin, sweating, chills, nausea, vomiting and sometimes mental and neurological symptoms. Later developments may include frequent painful urination with blood in the urine, dysentery with blood and pus in the stool, loss of weight, anemia and enlargement of the liver and spleen. Numerous complications are possible.

Typically the acute phase subsides and host and parasite live together over a period of years, sometimes as long as thirty, with the host suffering a variety of symptoms of intermittent and variable types. Bladder and bowel troubles are the most characteristic symptoms in this period.

Treatment

The disease can be treated with drugs, but only well-trained persons should undertake to treat a victim. Supportive treatment, which includes good diet, nursing care, rest and treatment of other ailments and infections, is important.

Diagnosis

The variety of vague and general symptoms is considerable and may not be very specific. Examination of urine and/or feces is very important; special concentration techniques may be necessary to reveal the eggs. Tissue tests and skin tests can be used by medically-trained personnel to identify the disease.

Prevention

The disease can be prevented by:

1. Using uncontaminated water -- a properly built sealed well or an improved sealed spring is safe. (See section on "Water Resources.")

2. However, it is important to remember that all water used must be safe. Avoiding contact -- a practical method for personal protection. Never bathe in or touch water you wouldn't drink. Avoid suspected water. If it is necessary to use questionable water, boil it, or treat it with iodine or chlorine. If you must enter suspected waters, wear rubber gloves and wading boots, and put repellent on your skin; insect repellent (either diethyl toluamide or dimethyl phthalate), benzyl benzoate, cedar wood oil, or tetmosol give effective protection for about 8 hours if applied to the skin before contact with the water. In case of accidental contact, rub your skin

immediately with a dry cloth. Once cercariae have penetrated the skin, no preventive measures are possible.

3. Chlorination - Chlorine kills cercariae slowly, but properly chlorinated water systems are almost always free of the larvae. Use 2 halazone tablets in a liter (quart) of clear water; 4 tablets if the water is cloudy. In a water system, use 1 part per million chlorine. Iodine is even more lethal to cercariae. See section on "Chlorination of Polluted Water."

4. Filtering - Cercariae are just big enough to be seen with the unaided eye, and can be filtered from the water. However, dependence on filtration is questionable, since improperly made or operated filters will not only allow cercariae to pass, but may even provide a place for the host snail to live. In short, filtering is a poor technique.

5. Storage - Storing water at temperatures over 21 C (70 F) completely isolated from snail hosts for four days will allow the cercariae to die; although at cooler temperatures they may live as long as 6 days. This is seldom a practical approach.

Elimination of the snail intermediate host is at present the most effective single method of controlling bilharziasis. The following methods are recommended:

1. Use a sealed, covered well or properly developed spring for a water supply. Make sure it is covered; this prevents access of organic matter which snails eat, cuts out light which would allow plants to grow for snail food, and prevents infected people from bathing in or contaminating the water.

2. If surface water must be used, put long lasting (copper) screens on the intake; draw lake water far from vegetated shoreline, and preferably 2.4 m (8') deep; take streamwater from a fast moving spot.

3. Be sure filters and reservoir tanks are kept covered and dark, and keep them clean.

4. Since snails prefer the stagnant water of canals, irrigation ditches and dams, control has been possible where the water level in ditches has been varied, where it has been turned off completely for periods, and where canals have been lined with cement or pipes have been used. Although the latter is initially expensive, it pays dividends not only in better health, but also in less water evaporation.

5. Poison snails with copper sulfate, copper chromate, or other copper salts. Use a dose of 15-30 parts per million by weight of copper and try to hold the copper-treated water over the snails for 24 hours. All or most of the aquatic vegetation should be stripped from stream bed or pool before treatment. Results for other than small controlled pools have been poor. Before attempting to treat streams, lakes, or other natural waters, study the reference material and seek experienced help.

Ridding an Area of Bilharziasis

Education is a major step in a continuing campaign against bilharziasis. Basic steps involved in improving your local waters so they will not spread the disease are as follows:

1. Inform yourself. Study this article, locate reference material cited below, consult any available health officials.

2. Learn to identify dangerous snails; for Africa, Professor Mozley's book is very helpful. To find the percentage of snails harboring schistosomes, collect a large sample of suspects (use rubber gloves, repellent and snail scoop), put

individually in test tubes or glass jars of water. Those shedding cercariae are readily detected, as the cercariae (0.5mm long and easily visible to the naked eye) are released in clouds. This test reveals only the snails harboring mature cercariae. Observe precautions at all times when collecting and handling snails!

3. Find dangerous snails locally, collect (again using rubber gloves, repellent and snail scoop) and kill them. Mail empty shells to an expert to confirm your identification. Visit him if possible. Find out about government or other programs and participate in these. This will probably involve steps 4 through 8.

4. Make a personal survey on foot (wearing boots) of local waters, using maps and keeping exact records to locate all dangerous snails. Local people can often help here. Aerial photographs are also helpful.

5. Survey types and intensity of bilharzia present in populace. Differences may help localize infection points. Keep special records for three to six year olds, who are the most recently infected; these records will show most accurately the incidence of new infections.

6. Educate the public as much as possible, and get them to participate in the program. (Improved sanitary facilities are worthless if nobody uses them.) Encourage people to live in villages away from infected waters, construct culverts or bridges at places where paths cross streams. The number of such crossings should be reduced. Any improvement should cater to local customs or offer an attractive alternative.

7. Personally supervise, participate in, and measure the effectiveness of poisoning the snails.

8. Take continuing steps to destroy the natural breeding places of snails, particularly at sites where humans and snails congregate. For example, where a stream crosses a road is a focal point: people stop to drink and bathe; they cook and wash out pots, providing food for snails. The culvert and embankments slow and impound the water, making ideal breeding conditions. Finally, under a bridge is a favorite sheltered place to defecate. Filling in places where water stands, changing drainage patterns and eliminating food sources are possible techniques.

9. Maintain a continuing surveillance of focal spots and repeat poisoning periodically when necessary.

10. Most important is education of the populace, improvement in (and use of) sanitation, safe disposal of night soil, improved nutrition, better medical service and an elevated standard of living.

Sources:

The Snail Hosts of Bilharzia in Africa: Their Occurrence and Destruction, by Alan Mozley, H. K. Lewis & Co. Ltd., London, England.
Schistosomiasis, Bulletin No. 6, The Ross Institute, The London School of Hygiene and Tropical Medicine, Keppel Street (Gower Street), London, W.C. 1, England.

Acknowledgements:

Mason V. Hargett, M.D., Hamilton, Montana

Dr. Guy Esposito
Dr. Thomas W. M. Cameron, Montreal, Canada

Other References:

Tropical Diseases, Manson, Patrick, 16th ed., Edited by P.A. Manson-Bahr, William & Wilkins Co. 428 E. Preston Street. Baltimore Md. 21202. 1966. U.S. $21.00.

Clinical Parasitology, Craig, Charles F. and Faust, 7th ed., edited by E. C. Faust and P. F. Russell, Lea and Febiger. 600 So. Washington Square, Philadelphia, Pennsylvania 19106. 1964. U.S. $16.50.

World Eradication of Infectious Diseases, Hinman, E. H., Thomas, Charles C. Publisher. 301 E. Lawrence Ave. Springfield, Illinois 62703. 1966. U.S. $8.50.

Medical Parasitology ,Markell, Edward K. and M. Voge, 2nd ed. Saunders, W. B. Co. 218 W. Washington Sq., Philadelphia, Pennsylvania 19105. 1965 U.S. $8.50.

The Merck Manual of Diagnosis & Therapy, 11th ed., Merck, Rahway, New Jersey 07065 U.S. $7.50.

(Valuable up-to-date information can be obtained by writing the World Health Organization, Geneva, Switzerland.)

Useful References:

The following "Sanitation Series" pamphlets, prepared by the Federal Extension Service, U.S. Department of Agriculture, in cooperation with the Agency for International Development, are available free of charge from:

Mission of the Agency for International Development
U.S. Embassy
(Capital of the country where the requester lives)

or

Agriculture and Rural Development Service
Office of the War on Hunger
Agency for International Development
Washington, D.C. 20523

#1: Drink Safe Water
#2: How to Wash Your Clothes
#3: Personal Cleanliness
#4: Wash Dishes Right
#5: Get Rid of Household Pests
#6: Dispose of Wastes
#7: Make Your Own Soap
#8: Prepare and Serve Safe Meals
#9: Care for Your Baby

APPENDIX

Simple methods are given here for converting English and metric units of measurement. Following these is a series of useful conversion tables for units of area, volume, weight, pressure and power.

LENGTH CONVERSION

The chart in Figure 3 is useful for quick conversion from meters and centimeters to feet and inches, or vice versa. For more accurate results and for distances greater than 3 meters, use either the tables in Figure 2 or the equations.

The chart in Figure 3 has metric divisions of one centimeter to three meters, and English units in inches and feet to ten feet. It is accurate to about plus or minus one centimeter.

Example:

An example will explain how to use the tables. Suppose you wish to find how many inches are equal to 66cm. On the "Centimeters into Inches" table look down the leftmost column to 60cm and then right to the column headed 6cm. This gives the result, 25.984 inches.

FIGURE 1

Equations:

1 inch = 2.54cm
1 foot = 30.48cm
= 0.3048m
1 yard = 91.44cm
= 0.9144m
1 mile = 1.607km
= 5280 feet
1cm = 0.3937 inches
1m = 39.37 inches
= 3.28 feet
1km = 0.62137 miles
= 1000 meters

FIGURE 2

INCHES INTO CENTIMETERS
(1 in. = 2.539977 cm)

inches	0	1	2	3	4	5	6	7	8	9
0	cm	2 54	5 08	7 62	10 16	12 70	15 24	17 78	20 32	22 86
10	25 40	27 94	30 48	33 02	35 56	38 10	40 64	43 18	45 72	48 26
20	50 80	53 34	55 88	58 42	60 96	63 50	66 04	68 58	71 12	73 66
30	76 20	78 74	81 28	83 82	86 36	88 90	91 44	93 98	96 52	99 06
40	101 60	104 14	106 68	109 22	111 76	114 30	116 84	119 38	12. 92	124 46
50	127 00	129 54	132 08	134 62	137 16	139 70	142 24	144 78	147 32	149 86
60	152 40	154 94	157 48	160 02	162 56	165 10	167 64	170 18	172 72	175 26
70	177 80	180 34	182 88	185 42	187 96	190 50	193 04	195 58	198 12	200 66
80	203 20	205 74	208 28	210 82	213 36	215 90	218 14	220 98	223 52	226 06
90	228 60	231 14	233 68	236 22	238 76	241 30	243 84	246 38	248 92	251 46

CENTIMETERS INTO INCHES
(1 cm. = 0.3937 in.)

cm	0	1	2	3	4	5	6	7	8	9
0	inches	0 394	0 787	1 181	1 575	1 969	2 362	2 756	3 150	3.543
10	3 937	4 331	4.724	5 118	5 512	5 906	6 299	6 693	7 087	7 480
20	7 874	8 268	8 661	9 055	9.449	9 843	10 236	10 630	11 024	11.417
30	11 811	12 205	12 598	12 992	13 386	13.780	14 173	14 567	14 961	15 354
40	15.748	16.142	16 535	16 929	17 323	17 717	18 110	18 504	18 898	19 291
50	19.685	20 079	20 472	20 866	21 260	21 654	22 047	22.441	22 835	23 228
60	23 622	24 016	24 409	24 803	25 197	25 591	25 984	26 378	26.772	27 165
70	27 559	27 953	28 346	28.740	29 134	29 528	29 921	30 315	30 709	31 102
80	31 496	31 890	32 283	32 677	33 071	33 465	33 858	34 252	34 646	35 039
90	35 433	35 827	36.220	36.614	37 008	37 402	37 795	38 189	38.583	38 976

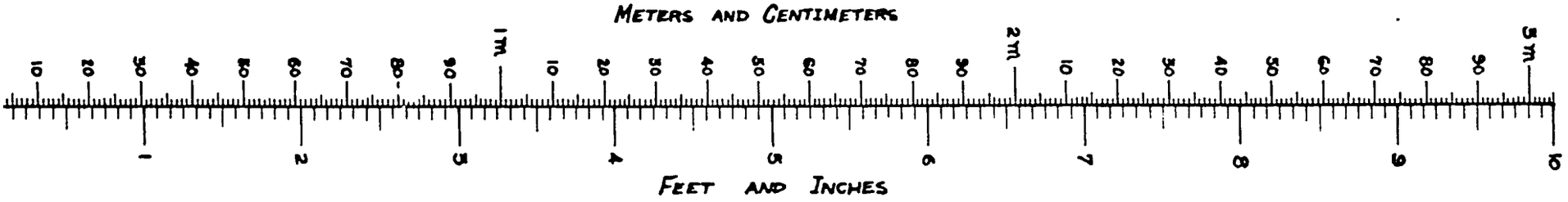

FIGURE 3

WEIGHT CONVERSION

The chart in Figure 5 converts pounds and ounces to kilograms and grams or vice versa. For weights greater than ten pounds, or more accurate results, use the tables (Figure 4) or conversion equations. See "Length Conversion," Figure 2, for an example of the use of the tables.

On the chart, notice that there are sixteen divisions for each pound to represent ounces. There are 100 divisions only in the first kilogram, and each division represents ten grams. The chart is accurate to about plus or minus twenty grams.

Equations:

1 ounce = 28.35 grams
1 pound = 0.4536 kilograms
1 gram = 0.03527 ounce
1 gram = 2.205 pounds

FIGURE 4

KILOGRAMS INTO POUNDS
(1 kg = 2 20463 lb.)

kg	0	1	2	3	4	5	6	7	8	9
0	lb	2 20	4 41	6 61	8 82	11 02	13 23	15 43	17 64	19 84
10	22 05	24 25	26 46	28 66	30 86	33 07	35 27	37 48	39 68	41 89
20	44 09	46 30	48 50	50 71	52 91	55 12	57 32	59 53	61 73	63 93
30	66 14	68 34	70 55	72 75	74 96	77 16	79 37	81 57	83 78	85 98
40	88 19	90 39	92 59	94 80	97 00	99 21	101 41	103 62	105 82	108 03
50	110 23	112 14	114 64	116 85	119 05	121 25	123 46	125 66	127 87	130 07
60	132 28	134 48	136 69	138 89	141 10	143 30	145 51	147 71	149 91	152 12
70	154 32	156 53	158 73	160 94	163 14	165 35	167 55	169 76	171 96	174.17
80	176 37	178 58	180 78	182 98	185 19	187 39	189 60	191 80	194 01	196 21
90	198 42	200 62	202 83	205 03	207 24	209 44	211 64	213 85	216 05	218 26

POUNDS INTO KILOGRAMS
(1 lb. = 0.45359 kg.)

lb	0	1	2	3	4	5	6	7	8	9
0	kg	0.454	0 907	1 361	1 814	2 268	2 722	3 175	3 629	4 082
10	4 536	4 990	5.443	5 897	6 350	6 804	7 257	7 711	8 165	8 618
20	9 072	9 525	9 979	10 433	10 886	11 340	11 793	12 247	12 701	13 154
30	13 608	14 061	14 515	14 969	15 422	15 876	16 329	16 783	17 237	17 690
40	18 144	18 597	19 051	19 504	19 958	20 412	20 865	21 319	21.772	22 226
50	22 680	23 133	23 587	24 040	24 494	24 948	25 401	25 855	26 308	26 762
60	27 216	27 669	28 123	28 576	29 030	29 484	29 937	30 391	30 844	31 298
70	31 751	32 205	32 659	33 112	33 566	34 019	34 473	34 927	35 380	35 834
80	36 287	36 741	37 195	37 648	38 102	38 555	39 009	39 463	39 916	40 370
90	40 823	41 277	41.730	42 184	42 638	43 091	43 545	43 998	44 452	44.906

FIGURE 5

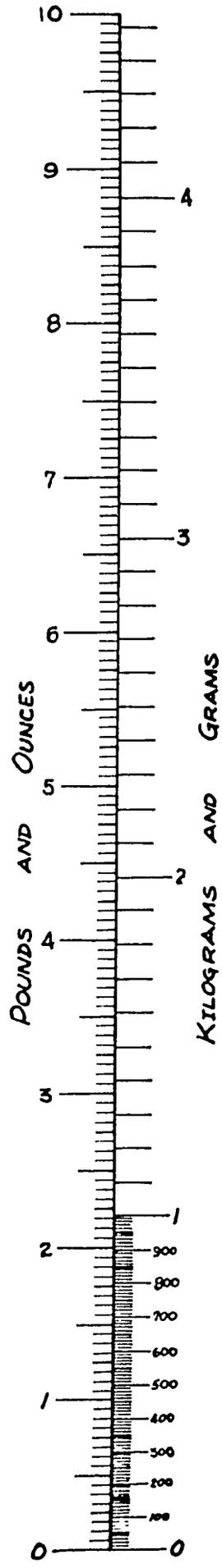

FIGURE 1

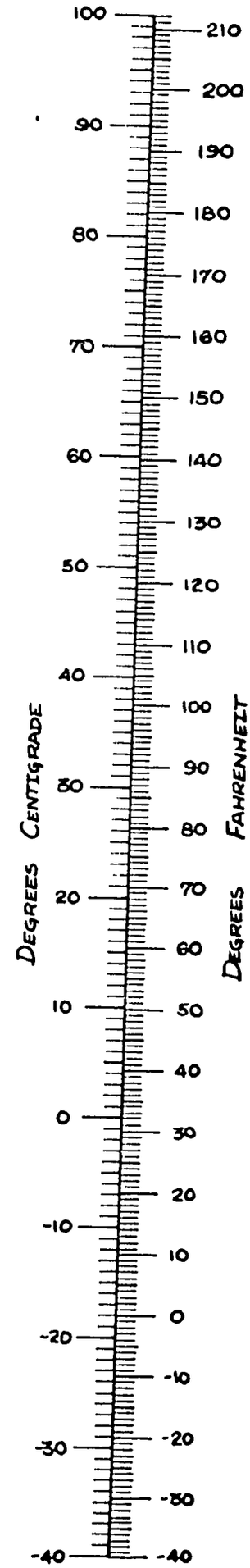

TEMPERATURE CONVERSION

The chart in Figure 1 is useful for quick conversion from degrees Celsius (Centigrade) to degrees Fahrenheit and vice versa. Although the chart is fast and handy, you must use the equations below if your answer must be accurate to within one degree.

Equations:

Degrees Celsius = 5/9 x (Degrees Fahrenheit -32)

Degrees Fahrenheit = 1.8 x (Degrees Celsius) +32

Example:

This example may help to clarify the use of the equations; 72F equals how many degrees Celsius?

72F = 5/9 (Degrees F -32)

72F = 5/9 (72 -32)

72F = 5/9 (40)

72F = 22.2C

Notice that the chart reads 22C, an error of about 0.2C.

Conversion Tables

Units of Area

1 Square Mile	= 640 Acres	= 2.5899 Square Kilometers
1 Square Kilometer	= 1,000,000 Square Meters	= 0.3861 Square Mile
1 Acre	= 43,560 Square Feet	
1 Square Foot	= 144 Square Inches	= 0.0929 Square Meter
1 Square Inch	= 6.452 Square Centimeters	
1 Square Meter	= 10.764 Square Feet	
1 Square Centimeter	= 0.155 Square Inch	

Units of Volume

1.0 Cubic Foot	= 1728 Cubic Inches	= 7.48 U.S. Gallons
1.0 British Imperial Gallon	= 1.2 U.S. Gallons	
1.0 Cubic Meter	= 35.314 Cubic Feet	= 264.2 U.S. Gallons
1.0 Liter	= 1000 Cubic Centimeters	= 0.2642 U.S. Gallons

Units of Weight

1.0 Metric Ton	= 1000 Kilograms	= 2204.6 Pounds
1.0 Kilogram	= 1000 Grams	= 2.2046 Pounds
1.0 Short Ton	= 2000 Pounds	

Conversion Tables

Units of Pressure

1.0 Pound per square inch	= 144 Pounds per square foot
1.0 Pound per square inch	= 27.7 Inches of Water*
1.0 Pound per square inch	= 2.31 Feet of Water*
1.0 Pound per square inch	= 2.042 Inches of Mercury*
1.0 Atmosphere	= 14.7 Pounds per square inch (PSI)
1.0 Atmosphere	= 33.95 Feet of Water
1.0 Foot of Water = 0.433 PSI	= 62.355 Pounds per square foot
1.0 Kilogram per square centimeter	= 14.223 Pounds per square inch
1.0 Pound per square inch	= 0.0703 Kilogram per square centimeter

* at 62 degrees Fahrenheit (16.6 degrees Celsius)

Units of Power

1.0 Horsepower (English)	= 746 Watts = 0.746 Kilowatt (KW)
1.0 Horsepower (English)	= 550 Foot Pounds per second
1.0 Horsepower (English)	= 33,000 Foot Pounds per minute
1.0 Kilowatt (KW) = 1000 Watts	= 1.34 Horsepower (HP) English
1.0 Horsepower (English)	= 1.0139 Metric Horsepower (cheval-vapeur)
1.0 Metric Horsepower	= 75 Meters X Kilogram/Second
1.0 Metric Horsepower	= 0.736 Kilowatt = 736 Watts