AGENCY FOR INTERNATIONAL DEVELOPMENT
WASHINGTON, D. C. 20523

BIBLIOGRAPHIC INPUT SHEET

FOR AID USE ONLY

1. SUBJECT CLASSIFICATION

A. PRIMARY: Public Health

B. SECONDARY: Nutrition

2. TITLE AND SUBTITLE

Amino acid composition and nutritional value of milled fractions of sorghum grain

3. AUTHOR(S)

Shoup, F. K.; Deyoe, D. W.; Skoch, L. V.; Shamsuddin, M.; Bathurst, J.; Miller, G. D.; Murphy, L. S.; Parrish, D. B.

4. DOCUMENT DATE	5. NUMBER OF PAGES	6. ARC NUMBER
1970	8 p.	ARC

7. REFERENCE ORGANIZATION NAME AND ADDRESS

Department of Grain Science and Industry, Kansas State University, Manhattan, Kansas 66502

8. SUPPLEMENTARY NOTES (Sponsoring Organization, Publishers, Availability)

(In Cereal science today, v. 15, no. 5, pp. 266-273)

9. ABSTRACT

This paper presents the methods and results of a study of the nutritional effects on albino rats of diets of low- or high-protein milled fractions from two sorghum-grain hybrids, with and without lysine and methionine supplements. Two sorghum-grain hybrids of equal protein content were milled with conventional dry-milling equipment. The protein content of the endosperm fractions ranged from 6.82 to 15.96%. The fat, fiber, and ash contents of all fractions were about 1.0, 1.0, and 0.5%, respectively. Amino acid composition of the fractions varied. On the basis of essential amino acid contents, the nutritional quality of low-protein fractions was superior to that of high-protein fractions. Nutritive value of milled products of low- and high-protein content from each hybrid was compared on the basis of growth and protein efficiency ratios (PER's) of rats, with casein control diets used. Each fraction was fed with and without lysine and methionine supplements. When diets were not supplemented with lysine and methionine, the low-protein endosperm fraction was superior to the high-protein endosperm fraction. However, when the low- and high-protein fractions were supplemented with amino acids to meet calculated requirements, differences were not found, indicating that protein was utilized similarly when deficient amino acids were supplied. Amino acid supplementation of diets caused a marked increase in weight gain of rats, and PER's were similar to those obtained with casein. Differences in PER's relating to hybrids were nonsignificant, irrespective of amino acid supplementation.

10. CONTROL NUMBER

PN-AAB-878

11. PRICE OF DOCUMENT

12. DESCRIPTORS

Amino acids
Flours
Nutritive value
Sorghum

13. PROJECT NUMBER

14. CONTRACT NUMBER

CSD-1586 Res.

15. TYPE OF DOCUMENT

AID 590-1 (4-74)

Amino Acid Composition and Nutritional Value of Milled Fractions of Sorghum Grain[1]

F. K. SHOUP, C. W. DEYOE, L. SKOCH, M. SHAMSUDDIN, J. BATHURST, G. D. MILLER, L. S. MURPHY, and D. B. PARRISH[2], Kansas State University, Manhattan

Reprinted from CEREAL CHEMISTRY, May 1970, Vol. 47, No. 3

Amino Acid Composition and Nutritional Value of Milled Fractions of Sorghum Grain[1]

F. K. SHOUP, C. W. DEYOE, L. SKOCH, M. SHAMSUDDIN, J. BATHURST, G. D. MILLER, L. S. MURPHY, and D. B. PARRISH[2], Kansas State University, Manhattan

ABSTRACT

Two sorghum-grain hybrids of equal protein content were milled, with conventional dry-milling equipment. Protein content of the endosperm fractions ranged from 6.82 to 15.96%. The fat, fiber, and ash contents of all fractions were approximately 1.0, 1.0, and 0.5%, respectively. Amino acid composition of the fractions varied. On the basis of essential amino acid contents, the nutritional quality of low-protein fractions was superior to that of high protein fractions. Nutritive value of milled products of low- and high-protein content from each hybrid was compared on the basis of growth and protein efficiency ratios (PER's) of rats, with casein control diets used. Each fraction was fed with and without lysine and methionine supplementation. When diets were not supplemented with lysine and methionine the low-protein endosperm fraction was superior to the high-protein endosperm fraction. However, when the low- and high-protein fractions were supplemented with amino acids to meet calculated requirements, differences were not found, indicating that protein was utilized similarly when deficient amino acids were supplied. Amino acid supplementation of diets caused a marked increase in weight gain of rats, and PER's were similar to those obtained with casein. Differences in PER's relating to hybrids were nonsignificant, irrespective of amino acid supplementation.

In earlier work, the nutritive value of flours from sorghum grain was improved by addition of lysine (1). Improvements in weight gain and protein efficiency ratios (PER's) were dramatic, but they occurred in rats fed diets containing poor-quality protein for a 4-week period prior to lysine supplementation. Lysine supplementation following a deficiency period may have led to abnormally high growth and efficiency of protein utilization. The results also suggested that nutritive value of soft low-protein flours was similar to that of vitreous high-protein fractions when lysine-supplemented isonitrogenous diets were fed.

The present study was made to determine the effect on growth when diets were fed containing low- or high-protein milled fractions from two sorghum-grain hybrids, and effects of those diets when supplemented with lysine and methionine.

MATERIALS AND METHODS

Milling and Analytical Methods

Two sorghum hybrids, Paymaster Kiowa and Frontier 400C, having equal protein content (9.50% protein, 12% moisture basis), were milled with conventional dry-milling equipment. The process flowsheet is shown in Fig. 1. Grits were

---

[1]Presented at the 54th Annual Meeting, Chicago, Ill., April-May 1969. Contribution No. 687, the Department of Grain Science and Industries, No. 96, Department of Biochemistry, and No. 1092, Department of Agronomy, Kansas Agricultural Experiment Station, Manhattan. A report of work done under contract with the U.S. Department of Agriculture and authorized by the Research and Marketing Act. The contract was supervised by the Northern Utilization Research and Development Division of the Agricultural Research Service.

[2]Respectively: Instructor, Professor, Graduate Research Assistant, Graduate Research Assistant, Research Associate, and Assistant Professor, Department of Grain Science and Industries; Associate Professor, Department of Agronomy; and Professor, Department of Biochemistry, Kansas State University, Manhattan.

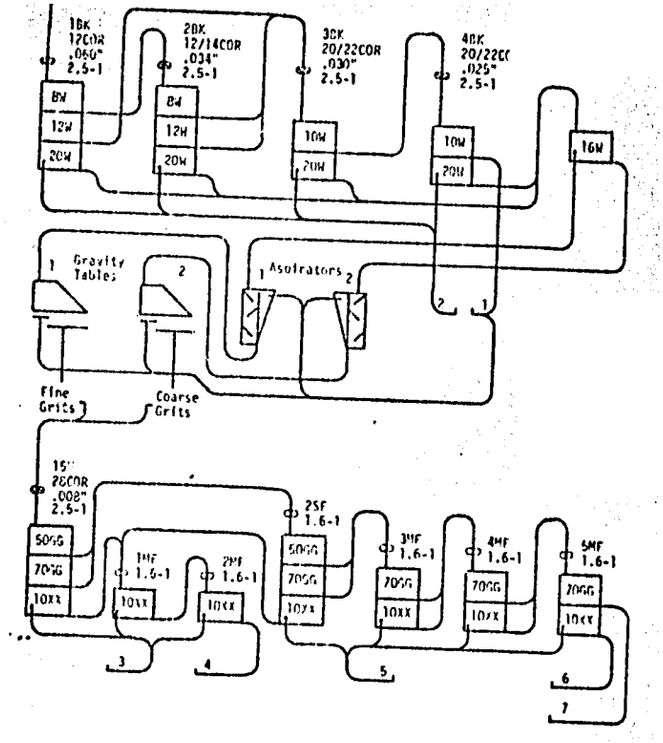

Fig. 1. Process flow for production of grits and flour from sorghum grain.

obtained from four break rolls, aspirator, gravity, and then reduced by a series of rolls and sieves.

Methods for crude protein, crude fat, ash, moisture, amino acids, and ammonia have been described (1).

Nitrogen recovery was calculated by dividing the sum of the nitrogen from the 17 amino acids plus ammonia by the amount of nitrogen in the sample, as determined by the Kjeldahl procedure.

Nutritional Materials

Female Sprague-Dawley 22-day-old albino rats were fed ten diets in a completely randomized design, six replications per diet. The rats ranged in weight from 43 to 50 g. at the beginning of the experiment. Individual wire cages were used in an animal laboratory maintained at 74°F. The growth trial lasted 4 weeks.

Table 1 shows identities and the proximate analyses of the diets. Two fractions from each hybrid were fed. Fraction 3 is a low-protein floury-endosperm product and fraction 7 is a high protein corneous-endosperm fraction. Each fraction was fed unsupplemented and supplemented with lysine and methionine. As sorghum-grain fractions were the only source of protein, the floury-endosperm diets contained approximately 5.6% protein and the corneous-endosperm diets, approximately 10.2%. A casein control diet was fed at both protein levels.

TABLE I. IDENTITIES AND PROXIMATE ANALYSIS OF EXPERIMENTAL DIETS

Diet No.	Hybrid	Milling Fraction	Amino Acid Supplement	Moisture %	Protein %	Fat %	Ash %
1	Paymaster Kiowa	3	−	11.2	5.6	4.2	3.5
2			+	11.3	5.8	4.3	3.4
3		7	−	10.6	9.8	4.3	3.4
4			+	10.7	10.4	4.3	3.4
5	Frontier 400C	3	−	10.7	5.4	4.3	3.4
6			+	10.8	5.8	4.4	3.4
7		7	−	10.5	10.0	4.2	3.4
8			+	10.8	10.7	4.0	3.5
9	Casein		−	10.0	5.8	4.0	3.2
10			−	9.9	10.0	4.0	3.2

Sorghum-grain fractions and casein were the only sources of protein in the experimental diets. Starch was added to the diets to bring the protein content to 5.6% in diets 1, 2, 5, 6, and 9; to 10.0% in diets 3, 4, 7, 8, and 10. The composition of the diets and the levels of supplemental lysine and methionine are shown in Table II. The supplemental amino acids were incorporated to provide the requirements adjusted to the protein level of the diet. In diets 1, 2, 5, 6, and 9, the requirement was calculated at 5.6/12, and in diets 3, 4, 7, 8, and 10, 10/12 of the National Research Council (NRC) requirement for growth (2). The factor 12 was based on the NRC protein recommendation for a well-balanced protein source.

To compare nutritive values of floury- and corneous-endosperm fractions, PER's were corrected by the ratio of an assumed casein PER of 2.5 to the determined PER of the control casein diet (3). The PER's of the various experimental diets were corrected by multiplying the PER of the fraction by the ratio derived from the control diet having similar protein content; i.e., diets 1, 2, 5, and 6 were corrected by the ratio based on control diet 9; diets 3, 4, 7, and 8, by the ratio based on control diet 10.

RESULTS AND DISCUSSION

Milling and Analytical Results

Yield, protein, fat, fiber, and ash are shown (Table III) for the products of sorghum grain milled by the process shown in Fig. 1. No substantial differences were noted when similar fractions from the two sorghum-grain hybrids were compared.

Distribution of protein and amino acids in the various endosperm fractions is given in Table IV. On the basis of distribution of lysine and methionine in the protein, the floury endosperm was generally of higher quality than corneous endosperm (note changes from fraction 3 to 7). The trends in amino acid distribution and composition of the fractions are in general agreement with those found in earlier work (1). There was no appreciable difference in amino acid composition of fractions obtained from the two hybrids.

TABLE II. COMPOSITION OF EXPERIMENTAL DIETS

Ingredients	1 %	2 %	3 %	4 %	5 %	6 %	7 %	8 %	9 %	10 %
Milled fraction	85.08	85.08	67.98	67.98	92.26	92.26	70.49	70.49		
Starch	7.18	7.18	23.03	23.03			20.60	20.60	84.75	80.26
Corn oil	3.40	3.40	3.40	3.40	3.40	3.40	3.40	3.40	3.86	3.86
Water[a]			1.22	1.22			0.97	0.97	0.97	0.87
Vitamin premix[b]	0.63	0.63	0.63	0.63	0.63	0.63	0.63	0.63	0.63	0.63
Mineral premix[b]	3.71	3.71	3.71	3.71	3.71	3.71	3.71	3.71	3.71	3.71
Lysine		0.33		0.64		0.33		0.64		
Methionine		0.12		0.25		0.12		0.25		
Casein									6.08	10.66

[a]Water was added to adjust moisture content of diet to 10.5% in all diets.

[b]Premix composition: Mineral premix, in %; dicalcium phosphate 3.0, salt 0.3, KCl 0.305, $MgSO_4$ 0.177, trace minerals 0.05 (contains in p.p.m., Mn 10, Fe 10, Ca 14, Cu 1, Zn 5, I 0.3, Co 0.1). Vitamin premix, in mg.: vitamin A (30 IU/mg.) 66.7, vitamin D (15 U/mg.) 133.0, alpha tocopherol (110.1 U/g.) 544.9, menadione 0.1, thiamine HCl 1.25, riboflavin 2.5, pyridoxine 1.2, niacin 15.0, calcium pantothenate 8.0, vitamin B-12 5.0, choline chloride 750.0, and starch 5,000.0.

TABLE III. ANALYSIS OF FRACTIONS OBTAINED FROM DRY-MILLING SORGHUM GRAIN[a]

Fraction Description	Yield[b]		Protein		Fat		Fiber		Ash	
	A[c] %	B[c] %	A %	B %	A %	B %	A %	B %	A %	B %
1 Bran-germ	27.33	25.32	...[d]							
2 Fines	18.88	19.62								
3 Floury endo.	12.54	12.23	7.40	6.82	0.91	1.02	0.91	0.80	0.48	0.47
4 endo.	5.06	5.06	9.49	10.62	0.98	0.94	1.13	1.36	0.50	0.51
5 endo.	9.95	10.31	9.88	8.78	0.96	1.09	0.70	1.13	0.50	0.47
6 endo.	8.38	8.19	13.98	12.58	0.87	1.12	0.72	1.12	0.47	0.46
7 Corneous endo.	14.29	16.61	15.96	15.47	1.12	1.23	1.12	1.34	0.59	0.55

[a]Moisture-free basis.

[b]Percent of whole sorghum grain.

[c]Hybrid A, Paymaster Kiowa. Hybrid B, Frontier 400C.

[d]Blank spaces indicate no determinations made.

TABLE IV. AMINO ACID DISTRIBUTION IN PROTEIN OF SORGHUM GRAIN MILLED FRACTIONS AND CASEIN

	Fraction 3		Fraction 4		Fraction 5		Fraction 6		Fraction 7		Casein
	A[a]	B[a]	A	B	A	B	A	B	A	B	
Protein[b]	7.40	6.82	9.49	10.62	9.88	8.78	13.98	12.58	15.96	15.47	94.31
Lysine[c]	1.72	1.80	1.33	1.35	1.30	1.54	0.99	1.15	1.05	1.16	8.98
Histidine	1.98	2.10	2.03	2.16	1.96	2.25	1.81	2.18	1.93	2.05	3.21
Arginine	2.85	3.01	2.61	2.71	2.30	3.07	2.15	2.54	2.27	2.63	4.09
Aspartic acid	6.13	6.15	5.93	6.23	6.33	6.32	6.43	5.97	6.39	7.38	8.04
Threonine	3.09	3.16	3.14	3.26	3.16	3.38	3.00	3.22	3.03	3.34	4.72
Serine	4.45	4.31	4.54	4.92	4.66	4.78	4.61	4.70	4.63	4.91	6.36
Glutamic acid	21.73	20.67	23.67	24.85	24.93	25.11	25.24	25.68	25.59	27.05	27.15
Proline	8.06	8.17	8.93	9.20	9.03	9.28	9.47	9.42	8.86	10.87	12.63
Glycine	2.61	2.79	2.50	2.56	2.36	2.75	2.15	2.40	2.18	2.56	2.02
Alanine	9.34	8.92	10.41	10.81	10.66	10.82	11.21	11.53	10.95	11.42	3.31
Cystine[d]	1.77	2.13							1.47	1.77	0.53
Valine	4.28	4.86	4.38	4.67	4.81			4.87	5.05	5.39	7.00
Methionine[d]	1.62	1.72							1.38	1.56	2.19
Isoleucine	3.98	3.83	3.99	4.12	4.27	4.18	4.22	4.26	4.30	4.45	5.80
Leucine	13.63	12.95	15.53	16.53	16.02	16.47	6.29	16.32	16.40	16.83	10.48
Tyrosine	4.08	4.02	4.15	4.41	4.43	4.45	4.58	4.44	4.50	4.53	6.33
Phenylalanine	5.13	5.08	5.30	5.46	5.79	5.40	5.82	5.94	6.01	6.12	5.64
Ammonia	2.95	2.75	3.08	3.38	2.76	3.23	2.94	3.16	3.15	2.90	1.86
N Recovery	86.26	85.31	92.28	97.51	92.46	95.94	91.68	97.04	94.42	99.76	103.44

[a]Hybrid A, Paymaster Kiowa; Hybrid B, Frontier 400C.

[b]Protein, % (N X 6.25) moisture-free basis.

[c]Grams amino acid per 16 g. nitrogen, duplicate determinations on samples 3A, 3B, 7A, and 7B.

[d]Cystine and methionine values determined by performic acid oxidation. Blank spaces indicate no determinations made.

Nutritional Results

Gains of rats during the 4-week trial, PER's, and percentage of the requirements supplied by the lysine and sulfur amino acid content of the diets are shown in Table V. Significant differences were found among PER's at the end of the fourth week. When not supplemented, the PER's of diets were low, but that of floury endosperm was superior to that of corneous endosperm within a given hybrid. The floury-endosperm diets (5.5% protein) supported a higher gain than the corneous-endosperm diets (9.9% protein). That agreed with differences in the level of lysine and sulfur amino acids in the diets and was not related to dietary protein content.

When the amino acids were incorporated into the diets, gains and PER were improved markedly, the largest gains occurring with the diets containing the higher level of protein. When the floury- and corneous-endosperm diets were supplemented with amino acids to meet adjusted requirements, significant differences in PER were not found, indicating that the protein was utilized in a similar manner when the deficient amino acids were supplied. The unadjusted PER's (not shown) were comparable to those obtained with casein at similar

TABLE V. GAINS, PER, AND PERCENTAGE LYSINE AND METHIONINE REQUIREMENT SUPPLIED BY DIETS

Diet	Protein in Diet %	Hybrid[a]	Milled Fraction	Percentage Requirement Met[b] Lysine	Methionine	Gain[c] g.	PER[d] g.
1	5.6	A	3 (floury)	23	71	5.5	0.50ab
5	5.4	B		23	76	8.8	0.78a
3	9.8	A	7 (corneous)	14	55	2.5	0.16c
7	10.0	B		15	65	4.5	0.27cb
2	5.8	A	3 (floury)	98	114	35.5	2.58d
6	5.8	B		100	118	36.7	2.49d
4	10.4	A	7 (corneous)	99	105	75.7	2.32d
8	10.7	B		100	110	91.7	2.55d
9	5.8	A	Casein (control)	111	49	37.0	2.46
10	10.0	B		112	51	62.2	2.29

[a]Hybrid A is Pryimaster Klown; Hybrid B is Frontier 400C.

[b]National Research Council requirements are based on 12% dietary protein. Percentages shown are adjusted, 5.6/12 of the requirement for diets 1, 2, 5, 6, and 9 and 10/12 of requirement for diets 3, 4, 7, 8, and 10 (see text).

[c]Average weight gain per rat 0 to 4 weeks.

[d]Grams of gain per g. of protein consumed, corrected as follows: For the low-protein, floury endosperm diets 1, 2, 5, and 6 used the factor 2.5 (assumed PER casein) divided by 2.46 (PER of the controlled casein diet 9). For the high-protein, corneous-endosperm diets 3, 4, 7, and 8 used the factor 2.5 (assumed PER for casein) divided by 2.29 (PER of the controlled casein diet 10) (ref. 3). PER's with different letters are significantly different LSD (0.01) = 0.30.

protein content. Significant differences in PER were not observed among fractions obtained from the two hybrids.

Literature Cited

1. SHOUP, F. K., DEYOE, C. W., CAMPBELL, J., and PARRISH, D. B. Amino acid composition and nutritional value of milled sorghum grain produc .. Cereal Chem. 46: 164 (1969).
2. NATIONAL RESEARCH COUNCIL. Committee on Animal Nutrition. Nutrient requirements of laboratory animals. Publ. 990, National Academy of Sciences, National Research Council, Washington, D.C. (1963).
3. NATIONAL ACADEMY OF SCIENCES-NATIONAL RESEARCH COUNCIL. Evaluation of protein quality. Publ. No. 1100. Washington, D.C. (1963).

[Received May 26, 1969. Accepted November 13, 1969]