AGENCY FOR INTERNATIONAL DEVELOPMENT
WASHINGTON, D. C. 20523

BIBLIOGRAPHIC INPUT SHEET

FOR AID USE ONLY
Batch 31

1. SUBJECT CLASSIFICATION

A. PRIMARY
Agriculture AE10-0000-0000

B. SECONDARY
Agricultural economics

2. TITLE AND SUBTITLE
Use of the VDEL subroutine to simulate project implementation in economic development

3. AUTHOR(S)
Manetsch, T.J.

4. DOCUMENT DATE	5. NUMBER OF PAGES	6. ARC NUMBER
1974	10p.	ARC

7. REFERENCE ORGANIZATION NAME AND ADDRESS
Mich. State

8. SUPPLEMENTARY NOTES *(Sponsoring Organization, Publishers, Availability)*

9. ABSTRACT

10. CONTROL NUMBER
PN-AAB-791

11. PRICE OF DOCUMENT

12. DESCRIPTORS
Project management

13. PROJECT NUMBER

14. CONTRACT NUMBER
CSD-2975 Res.

15. TYPE OF DOCUMENT

AID 590-1 (4-74)

Naumetsch, T. J.
CSD-2975 Res.
PN-AAB-791

Use of the VDEL Subroutine to Simulate Project Implementation in Economic Development

In the implementation of projects in developing countries (i.e., irrigation, land reclamation, etc.) it is generally the case that the time required to complete projects is dependent upon the rate at which inputs are supplied. It is not uncommon for projects to remain uncompleted for extended periods due to shortages of capital, equipment, material, etc. In such cases inefficiencies can result which lead to an increase in the cost of implementing projects. In building models of the development process it is sometimes important to simulate this process of project implementation, the impacts of varying rates of supplying required inputs and the resulting impact on project completions, cost of implementation, etc. Since the time required for implementation depends in general upon the rate inputs are supplied, we have a situation requiring time varying delays in simulation. In what follows we will describe a model of this project implementation process based on the VDEL subroutine. We will describe the theory of the model, the assumptions it makes about the real world and some results obtained from a test model.

The Model and Its Assumptions

A block diagram of the model appears below in Figure (1).

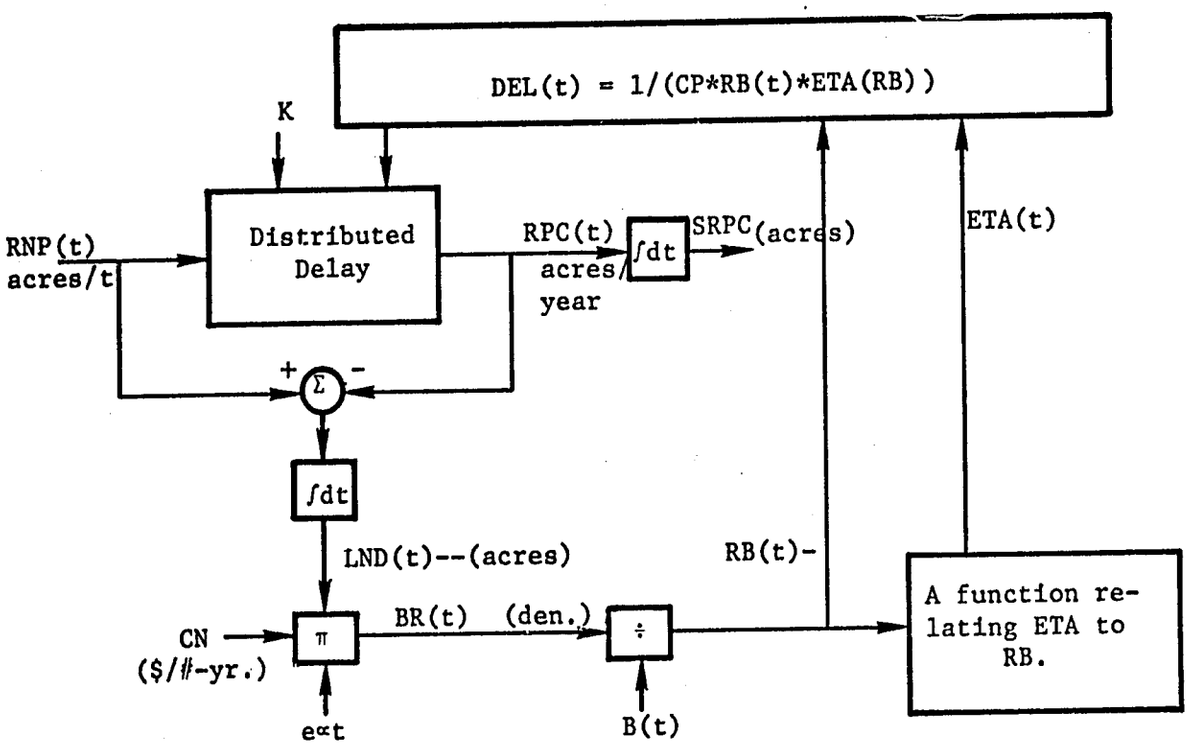

Figure 1

Block Diagram of the Project Implementation Process

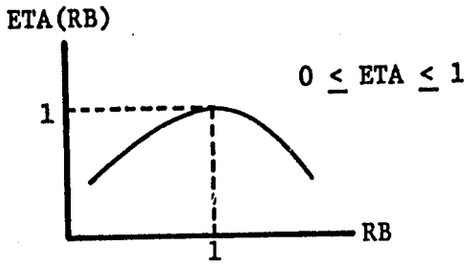

Figure 2

The "Efficiency of Capital" ETA

The variables associated with Figure (1) are defined as follows:

RNP = rate at which new projects are started in appropriate units, i.e., acres/yr. (This is an aggregate stream of new projects.)

RPC = rate at which projects are completed and ready for use (acres/yr.) (This is an aggregate stream of completed projects.)

LND = project units which are in the implementation process (acres)

BR = budget allocation required to implement LND project units at the optimum (least cost) rate ($/yr.)

CN = the optimum (least cost) per unit cost of implementation ($/acre-yr.)

α = a factor to account for price changes, inflation, etc. and their impact upon implementation cost

B = budget actually allocated to project implementation ($/yr.)--this is a variable determined by decision makers

DEL = the time required for project implementation--years (The distributed delay model assumes that individual projects in the aggregate stream have random implementation times from an Erlang distribution with mean DEL and parameter K.)

RB = the budget ratio B(t)/BR(t)

ETA = the efficiency of capital in project implementation, $0 \leq ETA \leq 1$.

CP = the reciprocal of the average project implementation time (DEL) when RB = 1 and ETA = 1

Before getting into a detailed description of the model let's take a broad look at it and its major assumptions. In the first place note that this is an aggregative model--the input and output variables RNP and RPC are streams or aggregates of individual projects. The distributed delay simulates the lag between the start and completion of projects and by its nature assumes that individual projects in the stream have random completion times taken from an Erlang distribution with mean DEL(t) and parameter K.

The mean delay time DEL(t) is assumed to depend upon the variable RB--the ratio of the budget allocated to the budget "required." While other formulations are possible, the specific relationship for DEL(t) in Figure (1) assumes that budget shortages or surpluses vis-a-vis the required budget are applied uniformly to all projects in the process of completion as measured by the variable LND in the figure. The model also assumes that there is an optimum project completion rate (corresponding to ETA = 1 and RB = 1) for which the costs of implementing projects at fixed prices is minimum. A further assumption is that the effects of varying inputs to the project implementation process (materials, equipment, manpower) can be adequately handled by variations in the aggregate variable "budget allocated"--B(t). The model formulation of Figure (1) includes the factor α which simulates the case of exponentially changing project costs if desired.

Now let's examine the model structure in more detail. As seen from Figure (1) the total project units (acres, etc.) in the process of completion is the variable LND:

(1) $LND(t) = LND(0) + \int_0^t (RNP(x) - RPC(x))dx$

From this variable the total budget required to implement these projects efficiently (at minimum cost per project unit) is BR:

(2) $BR(t) = LND(t)*CN*e^{\alpha t}$ ($/t)

The ratio of budget allocated to budget required plays an important role in the speed and efficiency of project completion. It is computed as RB:

(3) RB(t) = B(t)/BR(t)

It is assumed that RB influences what is called here the "efficiency of capital"--the variable ETA. ETA has the general functional form shown in Figure (2).[1/] The variable ETA has a maximum value of one where RB = 1 and is bounded between zero and one. This variable in effect says that when B ≠ BR the effectiveness of budget expenditures in the completion of projects is less than it is when funds are allocated at the rate B = BR. For example, the completion of projects can be accelerated by increasing B so that RB > 1 but the cost per unit of project completed will be greater than it would be if B = BR (and RB = 1). In like manner additional per unit costs are incurred if RB < 1. The particular situation being simulated determines the specific form of the function ETA.

The variable ETA plays a role in determining the average project completion time DEL. We first define the variable PROG as:

(4) PROG(t) = CP*RB(t)*ETA(RB) (/t)

PROG is the rate of project completion measured as the proportion of completion per unit time. The parameter CP is the proportion of completion per unit time when RB (and hence ETA) is equal to one. Equation (4) says that progress toward completion is directly proportional to the budget ratio RB as modified by the capital efficiency factor ETA. The reciprocal of the variable PROG is the mean delay between project start and project completion measured in the time units of the model:

(5) DEL(t) = 1/(CP*RB(t)*ETA(RB)) (t)

[1/] In the test model to be discussed ETA(RB) was assumed to be:
$ETA(RB) = 2RB - RB^2$ such that $0 \leq ETA \leq 1$. (See page 2 for figure.)

Given this model structure it is possible to compute measures of performance for the project implementation process. One such measure is the average cost per unit of project completed, PI(t) computed as:

$$(6) \quad PI(t) = \frac{\int_0^t B(x)dx}{\int_0^t RPC(x)dx} \qquad (\$/acre)$$

Another measure of system performance is the total project units, completed, SRPC, computed as

$$(7) \quad SRPC(t) = \int_0^t RPC(x)dx \qquad \text{(acres or other project units)}$$

A FORTRAN program for testing the project implementation model is listed in Figure (3).

Results of the Test Program for the Project Implementation Model

Some results from the simulation program of Figure (3) appear in Figure (4). In this example it is assumed that there are no projects in the implementation "pipeline" and that new projects are started at the rate of 1,000 acres per year for 2.1 years (a total of 2,100 acres of projects in all). This is the variable RNP in (a) of Figure (4). It is assumed that the average project completion time is two years when projects are funded such that the allocated budget is equal to the required budget (B = BR and RB = 1). (This corresponds to CP = .5.) In (b) of Figure (4), we see three cases--RB = .8, 1.2 and, RB = 1 (the value for minimum implementation cost at fixed input prices). In all cases α = .06 indicating that implementation costs are increasing at about 6% per year.

```
      PROGRAM PRJSIM(INPUT,OUTPUT)
      DIMENSION R(10)
      REAL LND
      C1 = .25
      C1 = 0.
      CB = 1.2
      CB = 1.
      CB = .8
      CP = .5
      PI = 0.
      SB = 0.
      SRPC = 0.
      DELMIN = 1.
      DELP = 2.
      DT = .1
      K = 3
      RLGTH = 10.
      NIT = RLGTH/DT + .0001
      NIPP = 2
      NIOL = NIT/NIPP
      CN = 1000.
      ALPHA = .06
      T = 0.
      DO 10 J = 1,K
      R(J) = 0.
   10 CONTINUE
      RPC = 0.
      LND = 0.
      PRINT101
      DO 2 IP = 1,NIOL
      DO 1 I = 1,NIPP
C               BR = BUDGET REQUIRED FOR OPTIMUM PROJECT IMPLEMENTATION
      BR = CN*LND*EXP(ALPHA*T)
C               B = BUDGET ALLOCATED
      B = CB*(1.+C1*SIN(6.28*T/2.))*BR
C               RNP = RATE NEW PROJECTS ARE STARTED
      RNP = 1000.
      IF(T.GT.2.0)RNP = 0.
      RB = 0.
      IF(BR.GT.0.)RB = B/BR
C               ETA = EFFICIENCY OF CAPITAL
      ETA = 2.*RB - RB*RB
      DEL = 0.
      IF(CP*ETA*RB.NE.0.) DEL = 1./(CP*RB*ETA)
      T = T+DT
      SB = SB+DT*B
      DEL = AMAX1(DEL,DELMIN)
C               RPC = RATE PROJECTS ARE COMPLETED
      LND = LND+DT*(RNPMRPC)
```

continued ...

```
      SRPC = SRPC+DT*RPC
      CALL VDEL(RNP,RPC,R,DEL,DELP,DT,K)
C                PI = PERFORMANCE INDEX
      PI = SB/(SRPC+.000001
    1 CONTINUE
      PRINT100,T,PI,DEL,B,BR,RNP,ETA,RPC,LND
      PRINT 102,SRPC
  102 FORMAT (10X,E10.4)
  100 FORMAT(9(4X,E10.4))
  101 FORMAT(4X,115HT          PI          DEL          B
    1      BR          RNP          ETA          RPC          LND)
    2 CONTINUE
      END

      SUBROUTINE VDEL(VIN,VOUT,R,DEL,DELP,DT,K)
      DIMENSION R(1)
      XIN = VIN
      FK = FLOAT(K)
      A = DT*FK/DEL
      DELD = (DEL-DELP)/(DT*FK)
      DELP = DEL
      DO 1    I = 1,K
      DR = R(I)
      R(I) = DR+A*(VIN-DR*(1.+DELD))
    1 VIN = DR
      VOUT = R(K)
      VIN = XIN
      RETURN
      END
```

A FORTRAN Test Program for the

Project Implementation Model

Figure (3)

In (b) of Figure (4) we see the impact of these changes in budget allocation upon the completion of projects over time. As expected, the speed of completion increases with RB. Perhaps not as expected is the fact that the RB changes in response are not linear about RB = 1. That is, a 20% increase in RB from one does not increase completion for various points in time as much as a 20% decrease in RB decreases completion. The reason for this, of course, is the fact that for a decrease in RB to .8 the effect of ETA < 1 augments the effect of a decrease in reducing the speed of project completion while for RB = 1.2 the decrease in ETA offsets in part the increase in speed of completion due to increasing RB.

It is also of interest in this example to study the effect of changes in RB upon the performance index PI. These results are tabulated below:

RB	PI(10)--(The average cost per unit of project completed at t = 10 $/acre)
.8	2459
1.0	2301
1.2	2372

As expected RB = 1 gives the least cost value for the performance index PI. Due to the nature of the ETA function (ETA(1.2) = ETA(.8) = .96) we would normally expect the performance index to be the same for RB = .8 and RB = 1.2. This is not the case because of the factor α which allows input prices to inflate by 6%. These rising prices penalize projects which are delayed in implementation by reduced implementation expenditures.

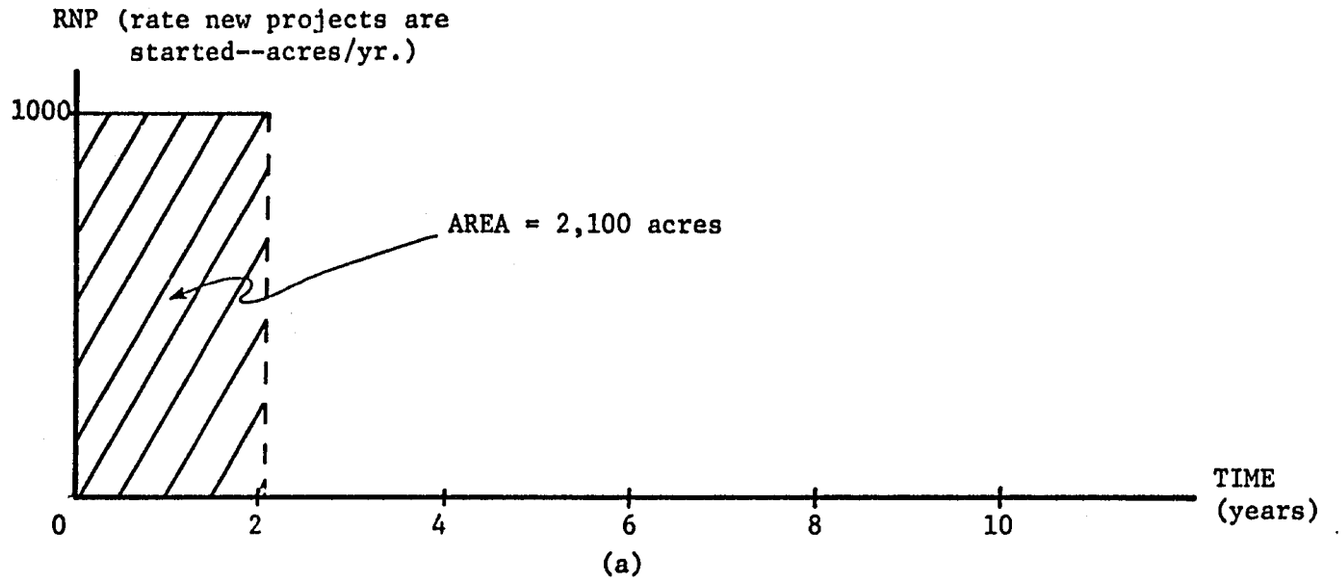

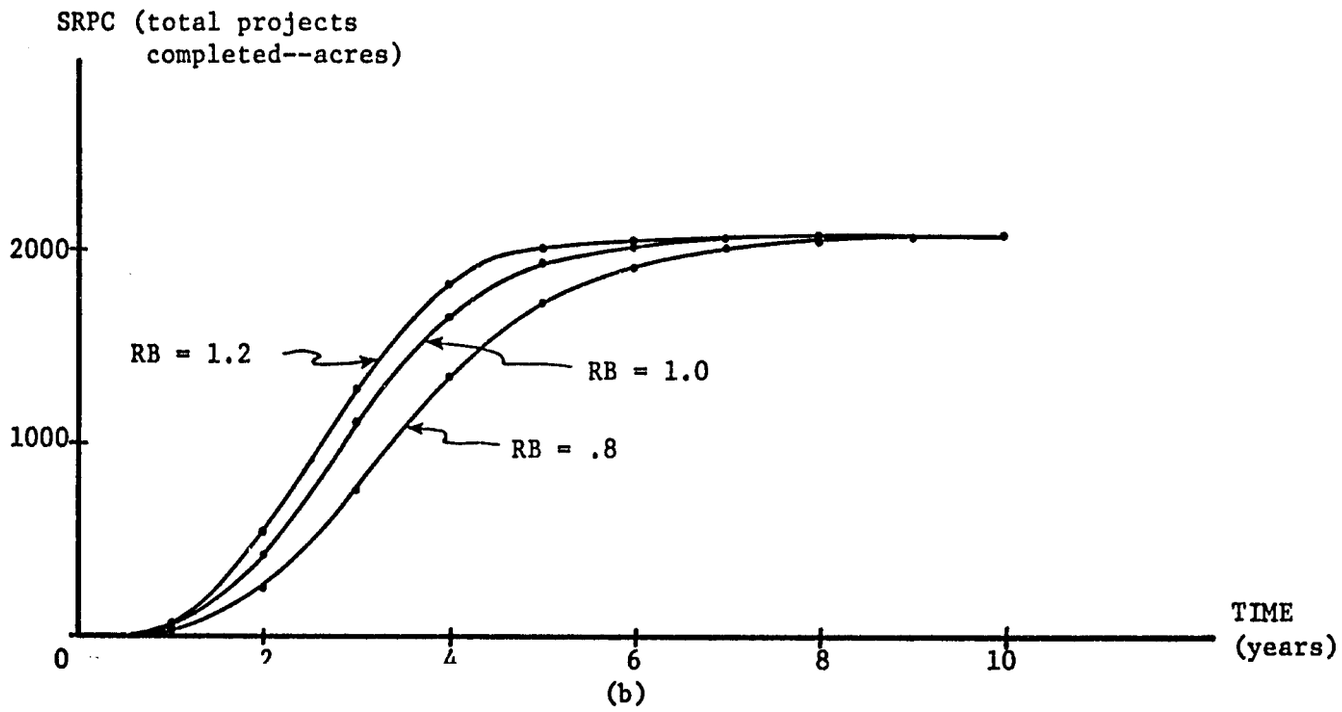

Figure 4

Results of Test Program for VDEL Simulation of Project Implementation