AGENCY FOR INTERNATIONAL DEVELOPMENT
WASHINGTON, D. C. 20523

BIBLIOGRAPHIC INPUT SHEET

FOR AID USE ONLY

1. SUBJECT CLASSIFICATION

A. PRIMARY: Agriculture

B. SECONDARY: Fertilizers

2. TITLE AND SUBTITLE

Corrosion problems in fertilizer plants

3. AUTHOR(S)

Lyons, V.E.

4. DOCUMENT DATE	5. NUMBER OF PAGES	6. ARC NUMBER
1971	15 p.	ARC 668.62.L991

7. REFERENCE ORGANIZATION NAME AND ADDRESS

National Fertilizer Development Center, Tennessee Valley Authority, Muscle Shoals, Alabama 35660

8. SUPPLEMENTARY NOTES *(Sponsoring Organization, Publishers, Availability)*

Published in Chemical processing & engineering, April 1971

9. ABSTRACT

With the shift to new types of products in the fertilizer industry, temperatures, pressures, and chemical feedstocks have increased the likelihood of corrosion to the processing plant. The best solution found is prevention. Initial construction should be as corrosion free as possible, and a corrosion specialist should be employed to identify and correct problems as they develop once production begins. Specific corrosion problems encountered in TVA plants and the methods used to solve them are shown. A paint test program and proper painting are recommended as the best safeguards against general corrosion in the plant.

10. CONTROL NUMBER: PN-AAB-494

11. PRICE OF DOCUMENT

12. DESCRIPTORS

13. PROJECT NUMBER

14. CONTRACT NUMBER: PASA NESA(QA)-14-71

15. TYPE OF DOCUMENT

AID 590-1 (4-74)

X : 66
668.62
L991

Corrosion problems in fertilizer plants

VERNON E. LYONS
Division of Chemical Operations, Tennessee Valley Authority, Muscle Shoals, Alabama

A.I.D.
Reference Center
Room 1656 NS

Reprinted from Chemical Processing & Engineering, April 1971.

PASA NESA (QA) 14-71

Corrosion problems in fertilizer plants

VERNON E. LYONS
Division of Chemical Operations, Tennessee Valley Authority, Muscle Shoals, Alabama

ABSTRACT

IN the fertilizer industry there has been a gradual shift to new type of products of higher and higher analysts during recent. years. The process materials and the temperatures and pressures involved in the processes to make these new materials have increased the likelihood and the importance of corrosion. At the same time, progress in understanding corrosion and preventing it has made it possible to keep corrosion within practical limits in the new plants. The best solution to a corrosion problem is prevention, and this starts with the contract for a new plant; the contract should cover specifically what is wanted in the way of a corrosion-resistant plant. Even under the best conditions, isolated corrosion problems will be encountered after the plant is in operation. All corrosion problems should be studied by a corrosion specialist because the basic causes can be quite varied and obscure. Identification and correction of the basic cause are required if the problem is to be solved rather than simply alleviated. In this respect, corrosion problems are no different from any other problem encountered in plant operation. Examples of several corrosion problems encountered in TVA plants are shown as well as the methods used in solving them. The exposure of corrosion test specimens in actual operating equipment is helpful in solving such problems or improving the equipment. A paint test program and proper painting are the best safeguards against general corrosion in the plant.

Introduction

CHANGES in the fertilizer industry have been occurring at an ever increasing pace during the past several decades. In the 1930's normal superphosphate of 16-18 percent P_2O_5 content was more or less the standard phosphate fertilizer. Gradually fertilizers of higher and higher analysis have been developed because their lower transportation and application costs per unit of plant food give them an economic advantage. These higher grades required more concentrated products which usually required much higher temperatures and pressures for manufacture. Chemicals that became widely used included sulfuric acid, phosphoric acid, nitric acid, ammonia, ammonium nitrate, urea, and diammonium phosphate. With chemicals of this type, the materials of construction became much more critical under the severe conditions of temperature and pressure required for their manufacture. Corrosion that would have been tolerated when making normal superphosphate could no longer be permitted because of the hazard involved and the high cost of replacing sophisticated equipment.

The large-scale production of these new chemicals has brought new corrosion problems. Many studies and tests are required to identify potential problems of corrosion and to determine what materials of construction and/or process conditions can be used to solve them successfully. Fortunately, intensive study of the fundamentals of corrosion has led to development of means for controlling it. Development of new metals and other corrosion-rseistant materials have kept pace with advances in fertilizer technology so that it is possible to produce these new fertilizers in practical plants. These plants are not free of corrosion, but they can produce the products economically.

In many countries the fertilizer industry has started expanding very rapidly only in recent years. These countries have the distinct advantage of securing large plants which incorporate the latest fertilizer technology and produce fertilizer most economically. However, there is also a disadvantage because the engineers and operators do not have a background of experience for this type of plant.

Purpose of the paper

When you buy a new plant costing millions of dollars, you naturally expect to obtain a trouble-free plant that will produce the scheduled amount of product. Generally this is what you will get; however, it is a rare plant that will not develop some corrosion problems. The purpose of this paper is to outline the steps that TVA has taken to solve corrosion problems in its fertilizer plants. It is not my purpose to solve a particular problem that you may have, but rather to discuss the methods used; each problem must be tackled individually, but the same methods can be applied to most problems.

Solving corrosion problems by prevention

No discussion of corrosion problems would be complete without recognizing that by far the best way to solve a corrosion problem is to prevent one from occurring. This can be accomplished best while the new plant is being designed. The process itself must not employ conditions under which corrosion cannot be controlled successfully. Since you only get what you

Reprinted from Chemical Processing & Engineering, April 1971.

demand, we must go one step further back and recognize that the contract or specifications for a new plant must cover what you want from the standpoint of a corrosion-resistant plant. Obviously the specifications for a new plant which may invite bids from several different processes cannot give detailed specifications for equipment subject to corrosion. However, it should state in specific terms what is expected in the way of a corrosion-resistant plant and thus give the contractor a base for designing the equipment. This will also be the basis on which your engineers can insist on the use of certain materials, methods, or conditions by the contractor.

As an example of points that should be covered, I would like to quote excerpts from our specifications for a new urea-solution plant.

Materials and equipment

a. Materials and equipment used shall be new, shall meet performance requirements, and have physical properties, conforming to the best engineering practice. When the characteristics of any material are not specified, material meeting the requirements of appropriate recognized standard specifications, codes, and standards shall be employed. Materials and equipment shall be kept clean and protected from weather, and be free from excessive scale and rust. All openings shall be provided with a protective cover.

Workmanship

a. Workmanship shall be first class and done by workmen skilled in their various trades. Tolerances, fits, and finishes, where not definitely specified, shall conform to the best modern shop practices as used in the manufacture of finished products and materials similar to those covered by this specification.

Corrosion

a. Materials of construction shall be only those which have been proved satisfactory by extensive use in the process proposed and shall be such that continuous long life and low maintenance operation are ensured.
b. Galvanic corrosion shall be avoided in process equipment by eliminating the use of dissimilar metals in contact with each other in a polar solution.
c. Ten flanged nozzles with blind flanges shall be provided at critical locations in piping and equipment for installation by TVA of corrosion test specimens. The specimens will be 2-inch diameter discs suspended from the blind flanges.
d. Piping and equipment in corrosive service shall be designed for a minimum of 5 years' operation.
e. All threaded connections on process piping and equipment subject to carbamate corrosion shall be back-welded.

Other points covered in the specifications are: restrictions on use of copper, brass, and aluminium; provision of adequate pulse dampeners and separators between stages of the CO_2 compressor; a tempered cooling water system for the intercoolers operating above 700 psig; use of Type 304 stainless steel in interstage piping and coolers and in heat exchangers.

Similar provisions with appropriate changes, of course, were included in our contracts for a 65 percent nitric acid plant and a 225-ton-per-day ammonia plant.

The ammonia plant contract does include several additional provisions which may be of interest to you.

a. High temperature pipelines shall be insulated with a high grade expanded silica or calcium silicate insulation essentially free of chlorides or which is treated with inhibitors to prevent corrosion in presence of moisture.
b. Reformer tube specification shall be such that at 50°F. above the expected operating temperature, tube stress will not exceed the rupture stress after 100,000 hours of operation. Stress will be calculated for sound metal after subtraction of unsound thickness on inside or outside of centrifugal castings. Suppliers will be required to submit calculations showing their compliance with the above.

The specifications also include some 13 references to specific ASTM specifications which various materials or fabrications must meet.

We have performed a lot of test work to determine what type of paint stands up best in our various plant areas (*1, 2*). Therefore our specifications for new plants also include detailed specifications covering the painting of the structural steel and equipment. More details on the specifications and painting are given in the appendix.

The contract provides that each of the contractor's drawings shall be reviewed and approved by the TVA project engineer. This gives the engineer an opportunity to see that the various contract provisions are being met at a stage where corrections can be made without significant trouble to the contractor. This review requires that the project engineer have a good knowledge of the corrosive situations that may develop and what materials will prevent or minimize corrosion. He calls on specialists for help when needed. Most contractors are interested in having satisfied customers, and we have experienced no unusual difficulty in arriving at a mutually satisfactory solution provided there is a reasonable basis for our initial objections. Experience shows there is no substitute for using the proper corrosion-resistant material.

The design engineer, in the case of new construction, and the maintenance supervisor, in the case of

Reprinted from Chemical Processing & Engineering, April 1971.

repairs, are key men in the prevention of corrosion. The literature has many examples (*5, 6*) of the right way and wrong way to do certain jobs so as to prevent corrosion. These men have a responsibility to be aware of these practices and to see that they are followed.

A former superintendent of our ammonia plant, who was a man of wide experience, had an adage which he often quoted, namely, "you pay for what you need, whether you get it or not." Review of some of your past problems will undoubtedly show this to be true.

The atmosphere in most fertilizer plants is fairly corrosive because of the dust and fumes which drift around. We have found that proper painting of the structural steelwork and equipment is an important form of corrosion prevention. The new steel in a new plant affords the ideal opportunity to eliminate corrosion by proper painting. It is an opportunity you will never have again because after the various dusts and solutions seep into cracks and joints there is no way of adequately removing them later. Proper surface preparation and priming are pre-requisites for a long-lasting paint job (*1, 2*).

Causes of corrosion

Before discussing some corrosion problems which we have encountered, let us briefly review the types of corrosion that can occur. The purpose of this is to emphasize that most of the corrosion you will encounter in a modern plant is not of the simple type such as would result from the use of a nonresistant metal, but involves much more subtle factors that are not always easy to recognize.

Corrosion is defined as the deterioration of metals by direct chemical or electrochemical reaction. The corrosion rate is affected by many factors. The more common ones are:

- The metal itself
- The corrodent
- Temperature
- Reaction products formed
- Aeration
- Oxygen concentration gradient
- Relative velocity
- Abrasion and/or erosion
- Electrical gradient

The importance and interaction of these various factors are largely self-evident. For practical purposes corrosion is controlled by selecting and balancing these variables against one another so that an acceptably low rate of attack is obtained. Therefore when unusual conditions occur during operation — as they can and do when the process gets out of control, during shutdowns, or while the equipment is idle — unexpected corrosion may occur because this balance has been destroyed or altered. For example, active metals, such as, aluminum, titanium, and high chromium stainless steel owe their high resistance to corrosion under oxidizing conditions to the formation of a surface oxide film which is very adherent and highly impervious; thus the metal is protected from attack, or we say it is passive. However, if the oxidizing conditions are lost, the metal is rapidly corroded. Many of you will recognize that this is the principle which is used to protect many urea reactors from corrosion. Thus corrosion can be encountered in even well-designed plants if the proper design conditions are not maintained. If corrosion becomes evident in a plant, one of the first steps in determining its cause is to analyze the actual operating conditions and determine how they have varied from the designed conditions, particularly with respect to the factors given above.

As mentioned above, general corrosion of large areas rarely occurs in today's modern plants. Instead, severe corrosion may appear at localized points, such as letdown valves, flange faces, welded areas, etc. Over the years, studies of corrosion by many workers have led to the identification of various conditions which will lead to corrosion. In most cases such corrosion proceeds in a characteristic fashion which has led to identification of these conditions as follows (*3*):

- Crevice corrosion
- Intergranular corrosion
- Stress corrosion
- Condensation corrosion
- Galvanic corrosion
- End-grain corrosion

Crevice corrosion can occur wherever there is a space between two pieces of metal. Here we are talking about spaces ranging from a hairline crack to perhaps a quarter of an inch. Since a space will almost always exist where two metals join each other, unless special precautions are taken crevice corrosion is widespread. A crevice becomes filled with solution which by virtue of its being essentially entrapped gradually changes in composition so that it differs from that in the surrounding medium. Then galvanic cell action will cause corrosion; or a depletion of oxygen in the solution in the cervice may destroy the passivity of the metal and lead to corrosion. This has been found to occur between flanges at nozzles on urea reactors (4).

As its name implies, intergranular corrosion can occur when a microconstituent of the alloy or impurities concentrate at the grain boundaries in the metal. This alters the structure and corrosion resistance of this area; intergranular corrosion results in the metal's having a porous appearance.

Stress corrosion is not frequently encountered because it requires the simultaneous occurrence of an alloy subject to stress corrosion, a stress in the metal, and the presence of a specific ion. The stress may have been left in the metal when it was formed or be the result of an applied load. Austenitic stainless steels, such as Type 316, exhibit stress corrosion in

Reprinted from Chemical Processing & Engineering, April 1971.

solutions containing chlorides. Another example of stress corrosion is the caustic embrittlement of boiler tubes which should always be guarded against.

Although a piece of chemical plant equipment such as a heat exchanger may adequately withstand the corrosive action of the gases in it, rapid corrosion may result if condensation of vapor occurs. The condensed vapor will frequently dissolve acidic components of the gases to form a week or perhaps a strong acid which the metal was not designed to resist. The exhaust mufflers on cars and buses are frequently victims of condensation corrosion.

Galvanic corrosion is the classic example of corrosion. It can occur whenever dissimilar metals are in contact with each other. Whenever moisture is present to form an electrolyte, a miniature battery is formed with the result that the base metal is corroded away by ion action. If it is not possible to avoid use of dissimilar metals, they should be insulated electrically from each other to avoid this type of corrosion.

End-grain corrosion is a rather specialized type of corrosion. Although the austenitic stainless steels have adequate corrosion resistance on their rolled surface, it has been found that the "end-grain" which is exposed when the sheet is cut transverse to the rolling direction has a much lower resistance with the result that corrosion can be quite rapid in certain solutions. The answer to this problem is to put a weld bead along the end-grain surfaces.

As you know, corrosion is quite a specialized field, and it is obvious from the above that I have not attempted to give a detailed technical explanation of how or why corrosion occurs. I hope the above discussion will have made the plant people aware that corrosion can be caused by many different conditions rather than simply the solution itself. For corrosion to be prevented or corrected, it is imperative that the basic cause be identified so that the proper corrective action will be taken.

Corrosion problems in a plant

Despite the most careful planning of a new plant by yourself and the contractor, some unexpected corrosion problems may be encountered after the plant starts operation. What do you do about these? What steps should be taken to solve the immediate problem and prevent its recurrence? I suggest the following steps:

1. Call in someone with a good knowledge of corrosion. Each organization should develop such an individual. He should see the corroded pieces in the original state rather than after they are cleaned, since sometimes deposits or position may be the key to the cause of the corrosion.
2. Take samples of the deposits or solutions; analyses may identify the cause of the corrosion.
3. Review the actual conditions under which the equipment has been operating, particularly temperatures, concentrations, flows, etc. Are these within the normal limits? Remember, the actual damage may have occured much earlier, so you need to look back many months.

It is nearly always urgent that operation be resumed as soon as possible. In some simple cases the cause of the corrosion may be determined and repairs and corrective action taken promptly. However, in most cases it is necessary to make some sort of temporary repair in order to resume production as soon as possible. For example, a localized corroded area may simply be built up by welding and the unit returned to operation. Or leaking tubes in a heat exchanger may be plugged so that the unit can be used. Or, the unit may be by passed if it will not lead to unacceptable conditions downstream. The time thus gained can be used to advantage. It will give the corrosion specialist time to examine his materials and arrive at the likely cause of corrosion. It will give time to secure additional materials which will be needed for permanent repairs of the unit. The use of a different metal may be indicated; but, which metal? Corrosion specimens of likely metals could be inserted into the equipment at the point of corrosion so as to obtain actual data on corrosion rates and thus have a firm basis for going to a more resistant material when permanent repairs are made. If temperature may be a factor in the corrosion, the accuracy of the appropriate thermocouples should be checked since these might be in error.

I would now like to review several corrosion problems which we have encountered in our fertilizer plants. I recognize that you will not have these specific problems in your plant, but these will serve as examples of how corrosion problems were anticipated or solved.

Corrosion in a Phosphoric Acid Plant: TVA produces phosphoric acid from elemental phosphorus (7) in several acid plants. The process of acid production consists of three steps, as shown in figure 1:

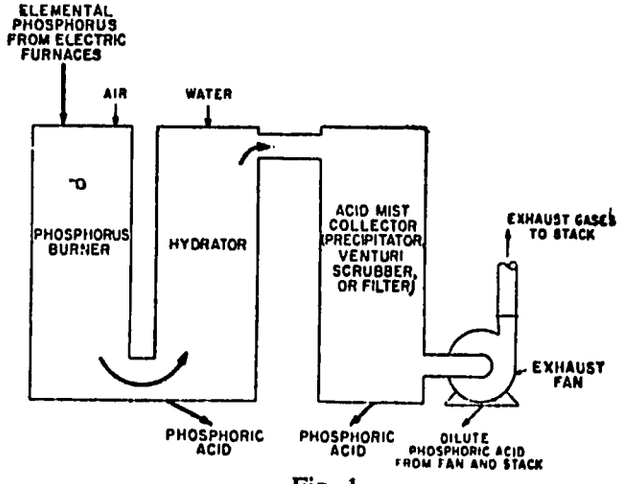

Fig. 1.
General flow diagram of the electric furnace process for the manufacture of phosphoric acid.

1. The burning of elemental phosphorus with excess air to form P_2O_5.

2. The hydration of this P_2O_5 in a hydrator by water and/or acid sprays.

3. The collection of the acid mist in a suitable collector before the gases are discharged to a stack.

Originally, electrostatic precipitators were used to collect the acid mist since this was the only type of collector which would give an adequate recovery efficiency. The corrosive conditions resulting from the high strength and temperature of the phosphoric acid were controlled successfully by the use of materials, such as carbon tubes, silver wires, lead lining, and stainless steel. However, after about 18 years' service the condition of one precipitator had deteriorated to the point that complete replacement would soon be necessary.

Comparison and evaluation of alternative methods of acid mist collection at that time disclosed that a venturi scrubber would be a satisfactory collector for the acid mist. Although venturi scrubbers are quite common today, their potential was just beginning to be realized at that time. A venturi scrubber system was installed in the No. 1 phosphoric acid unit in July 1954. Figure 2 is a drawing of this unit. The system consisted of the venturi scrubber to agglomerate the mist with a cyclonic entrainment separator following it. A fan pulled the gases through the system. The ducts were 30 inches in diameter and the throat of the venturi was 11-1/2 inches in diameter. The gas velocity at the throat is about 230 feet per second Pressure drop across the venturi was approximately 26 inches of water; this would now be classified as a medium pressure drop venturi scrubber.

Plant experience and laboratory tests had established that Type 316 stainless steel would withstand the conditions encountered in this process satisfactorily as long as the temperatures were below 225°F. Where temperatures were expected to exceed this, the stainless steel was water-cooled on the outside. Although we were confident that the Type 316 stainless steel would be generally satisfactory, we were concerned about the corrosive conditions which would exist at the throat where the velocity was high. You will recall that relative velocity and erosion are factors which will affect corrosion rates. Because of these factors, we anticipated that it might be desirable later to construct the venturi throat section of a more resistant material. Accordingly, before the unit was placed in operation corrosion specimens of potentially more resistant materials were installed in the venturi scrubber at a point where the velocity was 120 feet per second. It was impractical, of course, to install them directly into the throat; it was felt that comparison of the other metals with Type 316 at the point chosen would give a sufficient indication of their relative life. Table I gives the relative corrosion rates of the different metals at this point after 7 months' exposure. You will note these values are not the corrosion rates themselves but are the ratios of the corrosion rates to the rate experienced by 316 stainless steel at the same time. Only Nionel had a corrosion rate which was significantly lower than that of Type 316 stainless steel. Considering the cost, availability, ex-

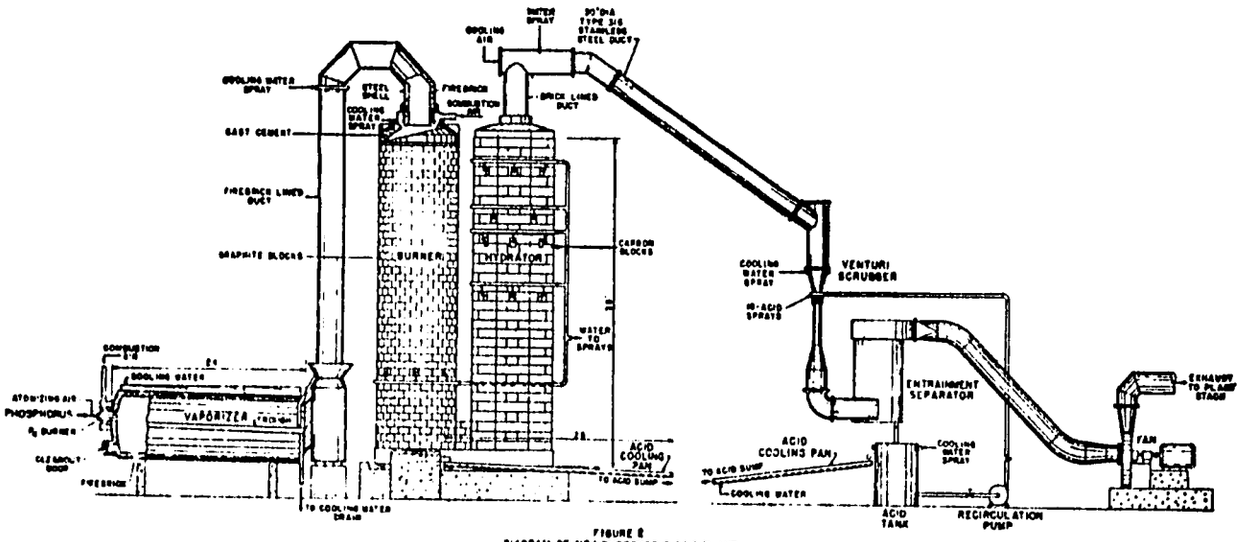

FIGURE 2
DIAGRAM OF NO. 1 PHOSPHORIC ACID PLANT

Reprinted from Chemical Processing & Engineering, April 1971.

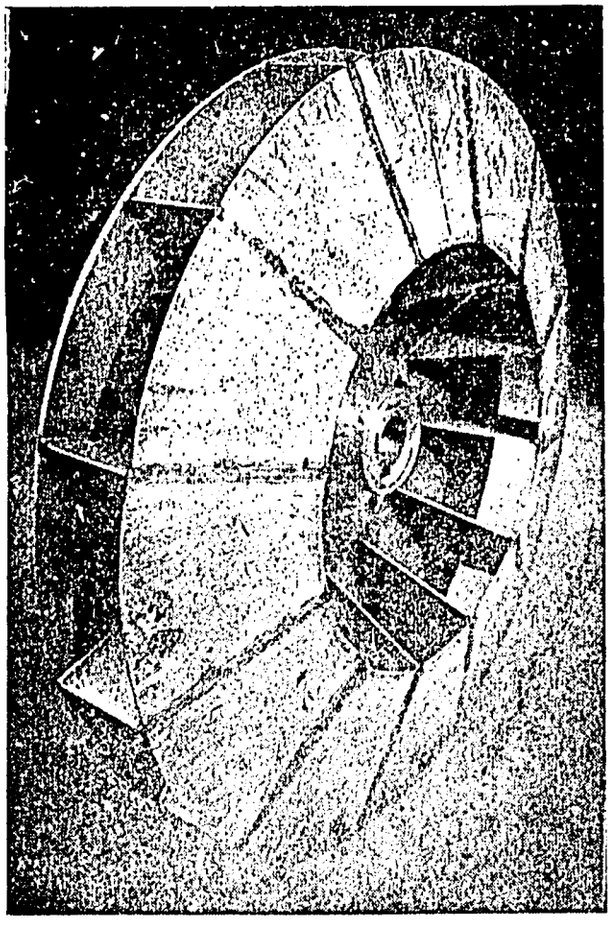

Fig. 3
Fan impeller

TABLE I

RELATIVE CORROSION RESISTANCE OF VARIOUS METALS EXPOSED IN THE CONE SECTION OF THE VENTURI SCRUBBER

Metal	*Relative corrosion rate as compared with type 316 stainless steel**
Nionel	0.4
17-14 Cu-Mo	0.7
V2B	0.8
FA20	0.8
Durimet 20	1.1
Type 201 Stainless Steel	1.1
Chlorimet 3	2.6
Hastelloy B	2.7
Monel	8.6
Type 430 Stainless Steel	11.8
17-4PH	11.8

* Corrosion rate of the test metal divided by the corrosion rate of type 316 stainless steel obtained during the same test.

perience of the craftsmen in fabricating the metals, and other factors, it was concluded that the longer life of the Nionel did not justify changing to it.

This is an example of how you should try to anticipate corrosion problems and arrange to have the answer ready when needed. You will recall that in the specifications for our urea plant there was a provision that the contractor should provide up-to 10 nozzles through which corrosion specimens could be inserted. We want these in order to gain more information on the corrosion problems associated with the urea process.

This venturi scrubber installation also furnished an example of how unexpected corrosion can occur. The fan used to exhaust the gases to the plant stack failed after only 2 months of operation because the impeller which was made of type 316 stainless steel was severely corroded. Figure 3 shows the impeller which consists of inner and outer rings with the radial fan blades butt-welded between these rings. The rings corroded on the side opposite the butt-welded blades.

Figure 4 is a photomacrograph of a cross section of the fan blade binding ring and a blade and shows where the corrosion occurred Notice the tight fit of the blade against the wheel and the complete closure by the two welds which effectively prevented any possibility of crevice corrosion occuring between the blade and the binding ring. Figure 5 is a picture of the back side of the binding ring. You will note the badly corroded areas opposite each weld. The metal had assumed an open, granular appearance and chunks had actually fallen out. Microscopic examination showed that chromium carbide had precipitated at the grain boundaries. It was concluded that the resulting chromium impoverishment of the austenite grain surfaces had made them susceptible to rapid attack under the acidic conditions. There was no evidence of corrosion of either the impeller or the fan housing except in the areas near the welds.

This was a clear case of intergranular corrosion mentioned earlier. This type of corrosion is frequently encountered when the regular type 316 stainless steel is welded. It can be prevented by proper heat treatment of the welded article so as to permit the carbon to redistribute itself in the grains, but this is usually not a practical solution. We have employed it at times.

In order to resume production as soon as possible, the fan impeller was fabricated with the blades secured by riveting instead of welding. This impeller lasted only a few months before the rivets became loose and excessive vibration developed. Riveting subjected the rivets to severe cold working which made them much more susceptible to corrosive attack. The problem was solved by using extra-low carbon (ELC) type

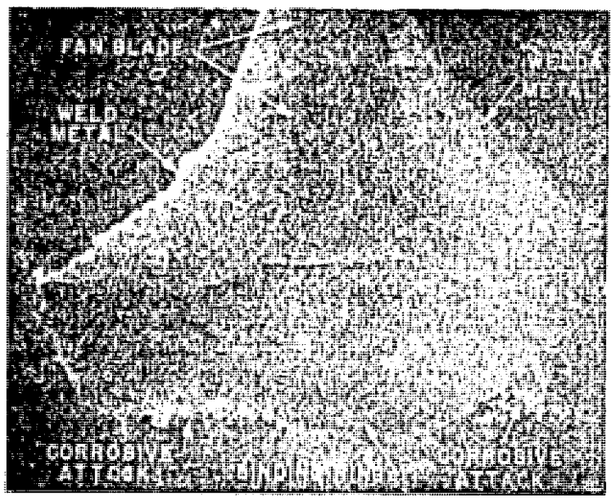

Fig. 4
Photomacrograph showing corrosion of fan impeller.

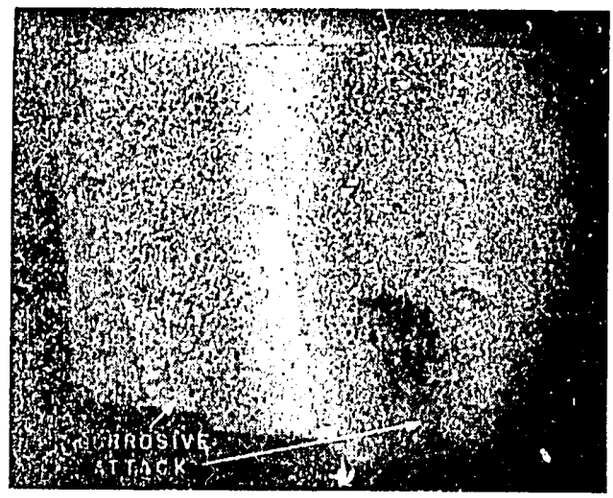

Fig. 5
Photomacrograph of section of impeller binding ring.

316 stainless steel and using the same welded construction that had been used in the first impeller. The low carbon content of this grade of stainless steel prevents significant carbide formation, and therefore serious corrosion does not occur. Although the use of the ELC grade when welding is to be performed is now the accepted practice, this grade of stainless steel was just being introduced at the time this trouble occurred.

Corrosion in an Ammonia Plant: As another example of how corrosion problems (8) are solved, I would like to cite an example that occurred in our ammonia plant. Our 275-ton-per-day ammonia plant was constructed in 1942. It uses two water-scrubber towers in parallel to remove the CO_2 from the process gases. Figure 6 is a cross section of the tower. Each tower is 10 feet in diameter and 80 feet high Process gas enters near the bottom, passes upward through three sections which are packed with Raschig rings, and leaves at the top. Raw Tennessee River water enters the top through a central vertical pipe and cascades downward over the packing. Pressure inside the tower is about 250 psi. The towers are made of firebox quality steel plate, ASTM specification A-70, and were originally 1-5/8 inches thick, which allowed for 3/8 inches of corrosion before replacement would be required. Over the years, a close check was kept on the internal condition of the towers. Between 1953 and 1955 it was necessary to replace many of the internal parts, such as the grating and grating support beams, water deflectors, and internal water pipes, because of gradual corrosion. By 1959, after 17 years' service, it was apparent that corrosion of the side walls had progressed to a point where they would be unsafe and the towers would have to be replaced after another two or three years. It was estimated that replacement would cost about $200,000. Thus there was quite an economic incentive to find some way of stopping the corrosion and thus avoiding the cost of replacing the towers.

As early as 1947, when corrosion first became significant, tests were started to find a paint that would protect the steel surfaces. Some of the structural members in the towers were painted with various types of paints. During the next 10 years, paints of different base types, such as vinyl, styrene butadiene, modified epoxy, and bitumen were applied to test panels and exposed inside the towers; but none was found to be durable.

In 1957, more extensive tests were made of newer protective coatings of the organic types. Since the plant towers were normally opened only once a year, a smaller test setup was devised to permit faster evaluation of the coatings. Figure 7 shows the test apparatus. It is simply a closed pipe connected to the exit water system from the tower and is therefore at the same 250-pound psi pressure. Water from the tower flowed through the test apparatus continuously. The coatings to be tested were placed on 1- by 5-inch test panels which were suspended in the test apparatus. One set of samples was tested in the raw water being pumped to the tower and another set was in the gas-laden water leaving the tower. It had been established earlier that some films or coatings failed because gas-laden water entered the film through pinhole defects; then when the pressure was released, the

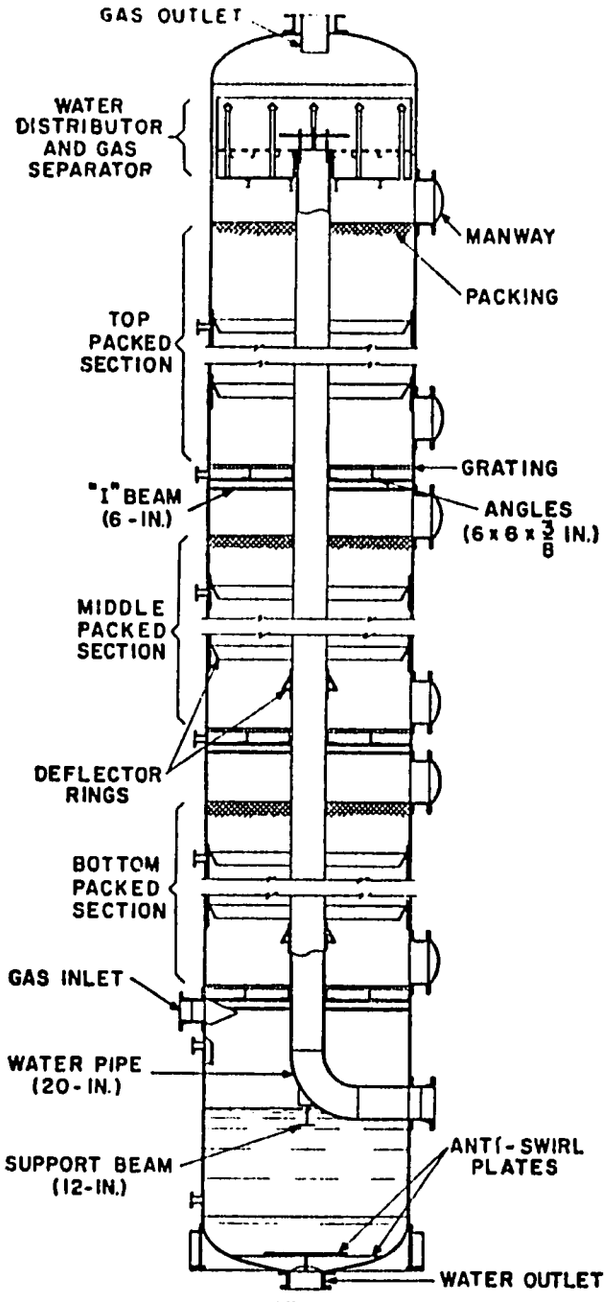

Fig. 6
Cross section schematic of carbon dioxide absorption tower.

trapped gas expanded, forming a blister in the film which caused subsequent failure. The test apparatus permitted quick release of the pressure as often as desired and thus accelerated the test procedure. Sixteen coating samples were tested for 7 months. Only a chlorinated rubber remained intact in the water leaving the tower; but the same sample failed in 30 days in the raw water entering the tower. No coating tested was considered sufficiently durable for use.

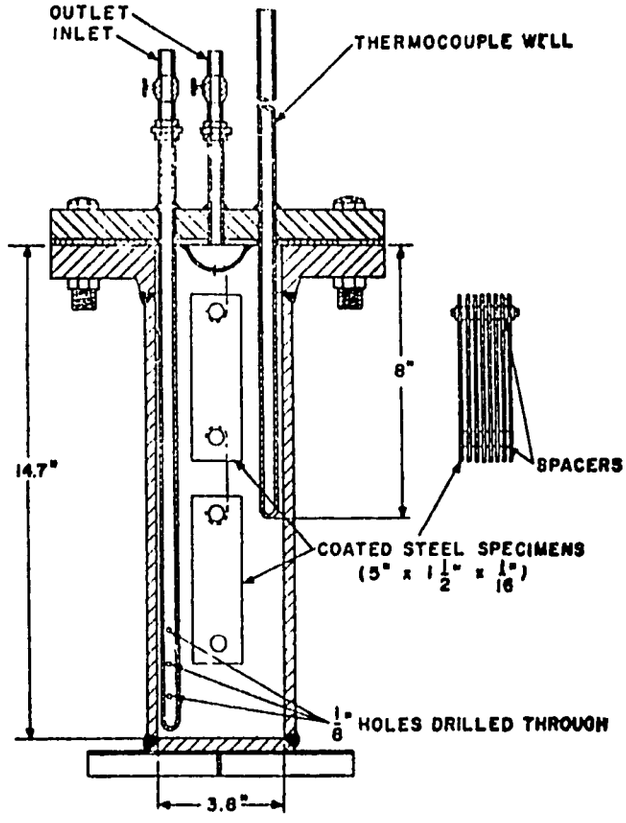

Fig. 7
Vessel used in testing coatings in water under pressure

The corroded surface of the tower was quite pitted. Because of the peaks and valleys of the corroded walls, irregular shapes of the tower, parts, the abrasive edges and weight of the tower packing, and the limitation of the materials tested, it became evident that some lining or thick protective coating applied in several coats would be required for successful control of corrosion in the towers.

In further tests thick coatings of protective materials were applied to badly pitted steel plates which were then exposed in the pressure testing apparatus. The test continued for 120 days with frequent reductions of the pressure. Of 18 coating materials tested, 5 were still in apparently good shape at the end of the 120-day test. A silica-filled fibreglass reinforced epoxy was considered the best for lining the tower for the following reasons:

1. The first trowel coat could be applied to fill the pits and cover the peaks of the corroded metal to a depth of about 1/16 inch.

2. The lining was so tough and adhered so tightly to the metal that it was difficult to remove with a hammer and chisel.

Reprinted from Chemical Processing & Engineering, April 1971.

3. The material imparted some tensile strength to the tower.
4. Its coefficient of expansion was almost the same as that of steel.

Subsequently the plant towers were lined with silica-filled fibreglass reinforced epoxy by a contractor in July 1960. The craftsmen who did the work knew their jobs and were conscientious workmen. The surface was prepared by complete sandblasting which assured good adhesion. Our plant engineers also followed the job step by step. The combined thinkness of the cured lining was approximately 1/8 inch above the peaks of the metal surface. After being cured, the lining was tested with a high voltage spark tester. Pin holes, or voids, thus detected were repaired to pass the spark test. This lining finished to a hard, smooth surface. The cost was only $25,000. There have been no operating problems, and at the last inspection in 1968 all visible parts of the lining showed no signs of any damage or failure.

This case history seems to illustrate several points which should be of interest to you as plant operators:

1. Usually there is no readymade solution to a particular corrosion problem. Each case must be solved individually.
2. It illustrates the necessity of testing potential corrosion-resistant materials under actual or simulated plant operating conditions.
3. When caught in time, and approached on a sound technical basis, satisfactory solutions can be found to most corrosion problems.

Corrosion in a Nitric Acid Plant: As a final example, I would like to discuss a corrosion problem which we have in our nitric acid plant. This is a modern pressure plant constructed by the Chemical and Industrial Corporation in 1964. It is rated at 165-tons-per-day HNO_3 when producing 65 percent nitric acid. Both the oxidation and absorption are accomplished under a pressure of approximately 120 pounds per square inch.

This new unit had been in operation less than 5 months and was still under the supervision of the contractor when it was discovered that the tubes in the tail gas preheater were leaking. Examination of the exchanger showed that 61 of the 710 tubes were corroded and leaking at the lower tube sheet.

Figure 8 is a sketch of the exchanger. It is a gas-to-gas exchanger in which the tail gas from the absorption column is heated by the hot gases from the waste-heat boiler. The converted gas which contains nitrogen oxides enters at the top and flows downward through the tubes. The tail gas, which has been partially heated in a tempering heater, enters the shell side at the bottom and leaves at the top; thus the two gas flows are countercurrent. The exchanger operates in a vertical position, and as you can see by the dimensions is a fairly large size. The tubes and tube sheets are type 321 stainless steel. The tubes extend about 3 inches below the lower tube sheet, and this portion of most of them showed severe corrosion. The corrosion was particularly severe near the tube sheet. In order to return the plant to operation, the leaking tubes were plugged and the unit resumed operation. After piping was fabricated to permit the plant to operate without the exchanger in place, the exchanger was removed for retubing.

	Temperature of gas °F			
	(1)	(2)	(3)	(4)
Converted gas				
Inlet	440	445	445	445
Outlet	285	231	300	325
Tail gas				
Inlet	150	140	145	147
Outlet	380	360	390	335

1. Design conditions 2. First 5 months 3. Retubed with 304 elec. 4.304 elec. tubes 8'-10'LG.

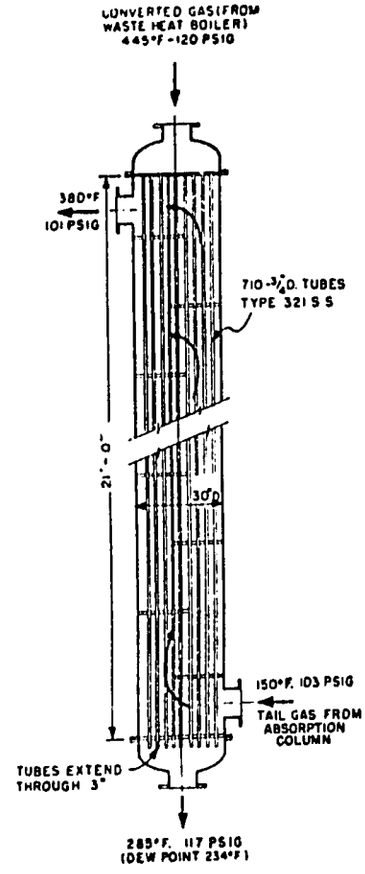

Fig. 8
Tail gas preheater.

One of the tubes which extended below the tube sheet was submitted for metallurgical examination. This tube had been exposed only to converted gas on both its interior and exterior surfaces. The tube failure was due to "knife line" attack in and at the boundaries of the weld. The most severe corrosion was in parent metal in the zones affected by heat during the process of fusion welding. Examination showed that the grain structure varied from fine to coarse and that the metal fused during welding was of cast structure. This assortment of crystalline structures is evidence that the tube was not properly heat treated after welding. Since no weld metal was added, proper heat treatment should have yielded a tube of homogeneous structure as required in ASTM designation A-249

Reprinted from Chemical Processing & Engineering, April 1971.

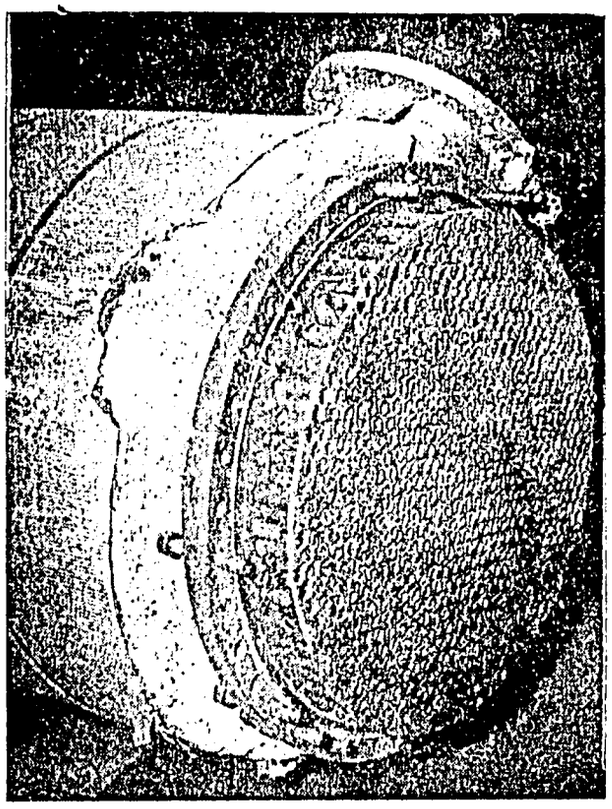

Fig. 9
False tube sheet on tail gas preheater

Grade TP321 which covered these tubes. Intergranular attack which results from carbide precipitation was quite pronounced.

The actual operating conditions of the exchanger were reviewed. You will note in column 2 of the table in Figure 8 that the outlet temperature of the converted gas (231°F.) was considerably below the design temperature of 285 degrees. It was calculated that the dew point of the converted gas was about 235°F. Since the gas had been cooled 4 degrees below the dew point, it was estimated that approximately 7 per cent of the moisture present would have condensed to produce an acid having an estimated concentration of 30 per cent HNO_3. It was concluded that the lack of proper annealing and the condensation of the weak acid were the causes of this corrosion.

It is interesting to note that while the preheater was out of service the consumption of electricity increased 18 per cent because of the lower energy content of the gases sent to the power recovery unit (expander) at the air compressor. The steam production also decreased 18 per cent because the cooler tail gases removed more heat in the reheater and thus left less heat to go to the waste-heat exchanger.

Tests by TVA and references in the literature indicated that type 304 ELC stainless steel would probably give better service than the type 321. The tube

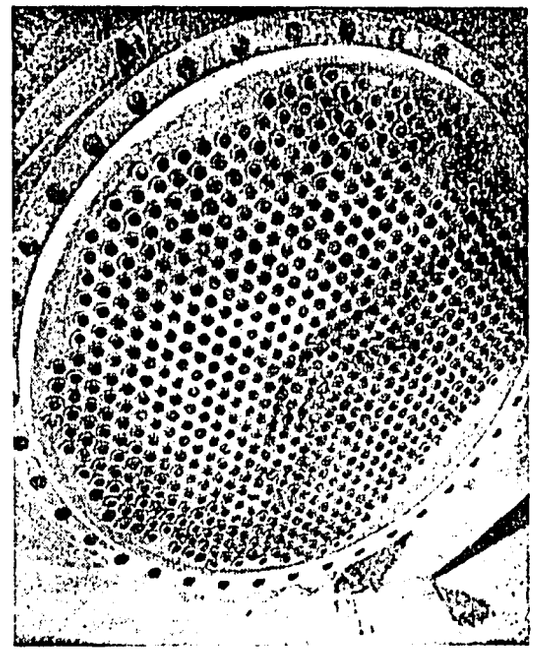

Fig. 10
Tube sheet showing corrosion pattern.

supplier concurred in this recommendation, so the contractor retubed the heat exchanger using type 304 ELC stainless steel. After the repaired preheater was reinstalled, the temperature at the converted gas outlet was held well above the dew point, as shown in column 3 of the table, and we thought this problem had been solved.

However, inspection a year later showed that significant corrosion was still occurring and the pattern was much the same as before. The corrosion was not so rapid as before because use of the proper metal prevented the rapid intergranular type of attack. Most, but not all, of the tubes extending below the tube sheet were being corrodded, with the most severe corrosion occurring near the tube sheet. The tube sheet around the tubes (i.e., crevice) was also corroding. No corrosion was noted on any other parts of the heat exchanger.

In an attempt to keep the corrosive gases away from the tube sheet, a false or second tube sheet was fabricated and slipped over the ends of the extended tubes, as shown in figure 9. Heated air was purged into this 3-inch space from opposite sides of the exchanger continuously. It was thought that this air would prevent further corrosion of the tube sheet by preventing gases from contacting it.

Figure 9 shows the lower end of the exchanger 9 months later. It is obvious that the air purge did not deter the corrosion appreciably. In fact, some of the worst corrosion occurred directly in front of the purge air entrances, as shown by the two arrows on the picture. Some tubes had corroded through the tube sheet and even above it.

It was still thought that the corrosion must be due to condensation of acid and that such condensation was occurring because of overcooling of the metal in localized areas where the cool gas stream entered just above the tube sheet. It was concluded that higher gas temperatures, that is, less cooling, might avoid the localized cool spot. Since only the lower few inches of the tubes were damaged at all, the tubes were cut to 8 feet 10 inches and the entire exchanger shortened. On the shortened exchanger, the tubes were cut flush with the lower tube sheet.

During installation of tubes in tube sheets, care must be taken not to overwork the tubes with the expander because excessive cold working of many metals makes them much more susceptible to corrosion. A torque-controlled tube expander is very useful. The torque setting is adjusted according to experience on the first few tubes, and then the remaining tubes are expanded using the same torque setting. Care must also be taken not to work and expand the tube above the tube sheet.

Unfortunately, after a year's service many tubes were leaking and the tube sheet appeared as shown in Figure 10. The cool tail gas entered the shell side in the left side where the tubes are missing. The bright area to right of center showed no sign of corrosion at all. The area of worst corrosion extended in toward the center from the tail gas inlet and curved around both sides near the wall of the exchanger, as shown by the darker areas. As you may have noted in column 4 of Figure 8, the shortened exchanger raised the temperature of the converted gas outlet to about 325°F and also lowered the temperature of the outlet tail gas to about 335°F. The pattern of corrosion definitely seemed to be related to the stream of 150°F. gas entering just above the tube sheet.

This type of corrosion has been found in similar plants (*8*) and occurs in the heat recovery train at the point where cold gases can cause the metal temperature to fluctuate above and below the dew point of the hot gas. Under this condition, acid droplets form and re-evaporate, thus creating corrosive conditions there and downstream. Crevices around the tubes are particularly subject to corrosion.

This preheater has now been retubed using the remaining half of the original 304 ELC tubes. When it is reinstalled, the gas flows will be made parallel, that is, the cool 150°F. tail gas will enter at the same end as the hot 440°F. converted gas. It is hoped the hotter converted gas will prevent the cool tail gas from overcooling the tubes.

I would like to point out that the flange of the tube sheet, and also its mating flange, are not insulated; the rest of the exchanger is insulated. This is to permit the detection of gas leaks and tightening of the flange bolts where necessary. It may be that heat loss from the bare flanges is an additional factor contributing to this condition. Some type of easily removed insulation will be installed when the exchanger is returned to service. We also have corrosion problems that are not easily solved.

Use of corrosion test specimens under plant conditions

You will recall that our specifications for the urea plant require the contractor to furnish up to 10 nozzles through which TVA could insert corrosion test speciments if desired. Many of you may feel that this type of testing is unnecessary. Our experience shows that it is well worthwhile. Laboratory corrosion tests can give valuable information, but only tests made under actual plant operating conditions can include the interaction of all the variables that will be acting on equipment at a given point. Many workers have described the various types of corrosion specimens they have used. We have found thin, round disks 2 inches in diameter to be the most convenient. They can be conveniently mounted and handled, as shown in figure 11. Except in a few environments, glass tubing can be used in place of the

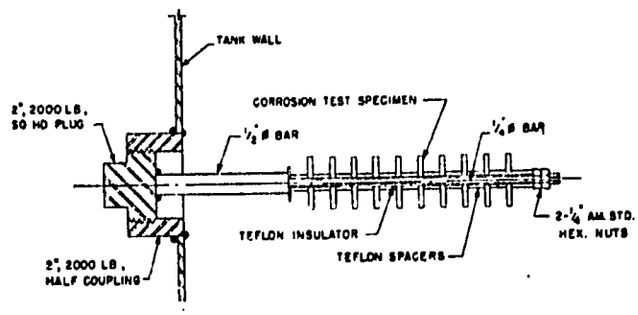

Fig. 11
Method of mounting corrosion test specimen

Teflon insulators and spacers. Figure 12 shows several sets of corrosion specimens ready for insertion. As you can see, the specimens include metal, plastic, and rubber. I believe these are for use in an SO_2-removal pilot plant at a TVA steam plant.

References

1. Allgood, H. Y., Nash, Harry, Jr., Patton R. Scott, and Barker, Karl L., "A Paint Evaluation Test Program," *Chem. Eng.*, *71* pp. 158-166 November 23, 1964.

Reprinted from Chemical Processing & Engineering, April 1971.

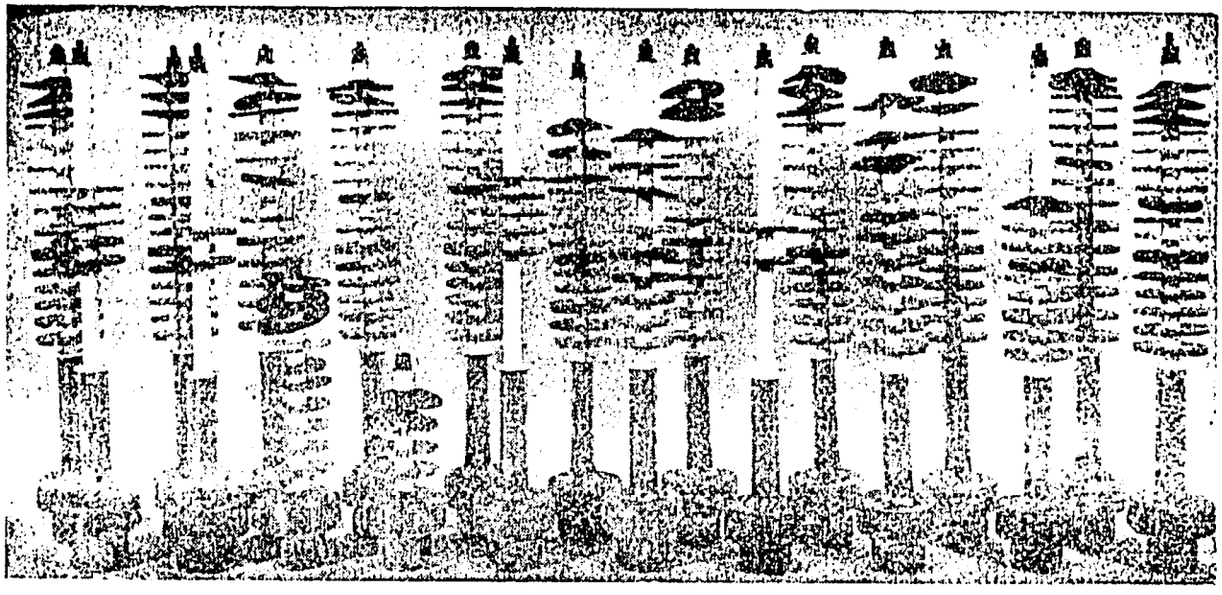

Fig. 12
Corrosion test specimens

2. Nash, Harry, Jr., "Fertilizer Plant Painting," *Commercial Fertilizer and Plant Food Industry, 108* p. 23 February 1964.
3. Husen, Cecelia, and Samans, Carl H., "Why Materials Fail-Metals," *Chem. Eng.* Desk Book Issue, pp. 15-22, (October 12, 1970).
4. Walton, Norton H., "Safety Problems of Urea Plants," Safety in Air and Ammonia Plants, *Chem. Eng. Progr.*, Vol. *9*, pp. 73-77 (1967).
5. Landrum, R. James, "Designing for Corrosion Resistance," *Chem. Eng.*, pp. 118-124, (February 24, 1969).
6. Landrum, R. James, "Designing for Corrosion Resistance," *Chem. Eng.*, pp. 172-180, (March 24, 1969).
7. Barber, J. C., "Corrosion Problems in the Manufacture of Phosphoric Acid from Elemental Phosphorus," *Corrosion*, Vol. *14*, pp. 357t-360t, (August 1958).
8. Allgood, H. Y., and Nash, Harry, Jr., "Scrubbing Tower Coating," *Materials Protection*, Vol. *1*, No. 6, pp. 46-59, (June 1962).
9. Newman, Daniel J., and Miller, Ryle, Jr., "Making Nitric Acid in All-Stainless Plants" *Chem. Eng.*, (July 31, 1967).

APPENDIX

DETAILS ON CONTRACT SPECIFICATIONS

Excerpts from specifications for a urea solution plant which relate to corrosion prevention or control:

Materials and equipment

a. Materials and equipment used shall be new, shall meet performance requirements, and have physical properties conforming to the best engineering practice. When the characteristics of any material are not specified, material meeting the requirements of appropriate recognized standard specifications, codes, and standards shall be employed. Materials and equipment shall be kept clean and protected from the weather, and be free from excessive scale and rust. All openings shall be provided with a protective cover.

Workmanship

a. Workmanship shall be first class and done by workmen skilled in their various trades. Tolerances, fits, and finishes, where not definitely specified, shall conform to the best modern shop practices as used in the manufacture of finished product and materials similar to those covered by this specification.

b. *Corrosion*

(1) Materials of construction shall be only those which have been proved satisfactory by extensive use in the process proposed and shall be such that continuous long life and low maintenance operation are ensured.

(2) No copper, brass, or copper-bearing metals shall be used in the unit except in instrumentation, equipment and electrical applications which shall be adequately protected from corrosive environment.

(3) Galvanic corrosion shall be avoided in process equipment by eliminating the use of dissimilar metals in contact with each other when in contact with a polar solution.

(4) Ten flanged nozzles with blind flanges shall be provided at critical locations in piping and equipment for installation by TVA of corrosion test specimens. The specimens will be 2-inch diameter discs suspended from the blind flanges.

(5) Aluminium shall not be used for process piping, vessels or vessel linings, and process equipment except specific items made of aluminium which are called for within this specification.

(6) Piping and equipment in corrosive service shall be designed for a minimum of five years' operation.

(7) All threaded connections on process piping and equipment subject to carbamate corrosion shall be back-welded.

Equipment requirements

a. *CO_2 compressor*

(1) Adequate pulse dampeners, separators and demisting equipment shall be furnished between stages to avoid vibration problems and to prevent condensed moisture or CO_2 from entering downstream cylinders. Pressure pulsations shall be no greater than ± 1 per cent of mean line pressure measured at the line nozzle of each pulsation dampener. Continuous drain-type separators shall be provided. Restriction venturi nozzles may be installed at the suction of each interstage for reduction of acoustic vibration.

(2) Intercoolers operating above 700 psig on the CO_2 gas side shall be provided with a tempered cooling water system which limits the inlet water to a minimum of 88°F. to prevent cold spots and CO_2 condensation. A closed cooling water system shall be provided for cylinder jacket water.

(3) All compressor cylinders shall be arranged with top gas inlets.

(4) All cold interstage piping and pulsation bottles shall be 304 stainless steel except interconnecting piping and pulsation bottles below 700 psig which may be carbon steel with 1/8-inch corrosion allowance. All intercoolers shall have 304 stainless steel tubes, baffles, staybolts, and tube sheets with carbon steel shells. All moisture separators shall be 304 stainless steel. Hot piping may be carbon steel.

b. *Heat exchangers*

(1) Heat exchangers with cooling water on the shell side shall have tubes, baffles and staybolts of type 304 stainless steel. Heat exchangers with cooling water on the tube side shall have type 304 stainless steel tubes. Other parts of the exchangers can be of carbon steel unless stainless steel is necessary for process reasons.

Painting and finishing

a. *Painting*

(1) The contractor shall paint all structural steel, machinery, and steel pipe. Piping or equipment made of stainless steel or nonferrous alloy shall not be painted. The paint system shall be a vinyl resin type of approved manufacture and colour. Three coats shall be applied to suitably prepared surfaces and the three coats of dried paint shall have a total minimum thickness of 5.5 mils. Complete details of all the paints the contractor proposes to use shall be submitted for approval. The contractor shall submit for approval a paint schedule showing type and colour to be used on each application. Paint shall not be applied prior to approval of the paint and paint schedule by the Technical Engineer.

(2) *Surface preparation*

(a) All structural steel shall be sandblasted to commercial grade, or better, as defined by the Steel Structures Painting Council or shall be cleaned by acid pickling. Machinery shall be treated in the manner usually given for the application of high gloss machinery enamel. All surfaces shall be free of oil, grease, rust, dirt, and chemicals before application of the prime coat.

(3) *Primer coat*

(a) The primer shall be quick-drying synthetic primer suitable for application to steel

surfaces. When applied by brush or spraying to vertical surfaces, a minimum dry film thickness of 1.5 mils shall be obtained in one coat without running or sagging. Pigments shall be inorganic. Fillers shall be chemically inert. The vehicle shall consist essentially of synthetic resins dissolved in aromatic or ketone-aromatic solvents.

(4) *Intermediate coat*

(a) An intermediate coat shall be applied over the primed surface and shall be a flat or low gloss type and of a color that contrasts with the primer and finish coats. The coating shall be applied to give a minimum dry film thickness of 2 mils without running or sagging. The pigments shall be inorganic. Fillers shall be chemically inert. The vehicle shall consist essentially of vinyl chloride-vinyl acetate copolymer resins dissolved in ketone-aromatic solvents.

(5) *Finish coat*

(a) The final coat shall be of a gloss type in a standard colour of TVA's selection and its colour shall be different from that of the intermediate coat. The paint shall be compatible with and suitable for application over the intermediate coat. The coating shall be applied to give a minimum dry film thickness of 2 mils. The pigments shall be inorganic. The vehicle shall consist of vinyl chloride-vinyl acetate coploymer resins dissolved in ketone-aromatic solvents with low volatility, and shall contain chemically resistant plasticizers. It shall contain no resins other than vinyl chloride-vinyl acetate copolymer types.

(6) *Approved products*

(a) Approval is given for the paints listed herein when applied to give the specified minimum thickness of 5.5 mils; paints other than these must be approved by TVA unless specified elsewhere in this specification.

Presented at the Fertilizer Plant Maintenance Seminar Cochin, India