THE REPORT ON THE STORAGE OF IMPORTED CORN

IN INDONESIA

Prepared by

Do Sup Chung and Richard Phillips
Food and Feed Grain Institute
Kansas State University
May 1973

Prepared for the

AGENCY FOR INTERNATIONAL DEVELOPMENT
AID/csd-1588
Technical Assistance in
Food Grain Drying, Storage, Handling and Transportation
at the
FOOD AND FEED GRAIN INSTITUTE
Kansas State University
Manhattan, Kansas 66506

Dr. William J. Hoover, Director
Dr. Leonard W. Schruben, Associate Director
Dr. Richard Phillips, Agricultural Economist
Dr. Harry B. Pfost, Agricultural Engineer
Dr. Do Sup Chung, Agricultural Engineer
John R. Pedersen, Entomologist

TABLE OF CONTENTS

	PAGE
INTRODUCTION	1
BACKGROUND OF CORN STORAGE PROBLEM	3
THE FIRST INSPECTION	5
THE FACTORS INFLUENCING GRAIN STORAGE	9
THE SECOND INSPECTION	13
SUGGESTIONS AND RECOMMENDATION	18

LIST OF TABLES

Table 1.	Approximate equilibrium moisture content of corn at various air temperatures and relative humidities	11
Table 2.	Maximum time for storage of shelled corn at various corn moistures and air temperatures	11
Table 3.	The locations of go-downs and quantities of corn stored at each go-down in East Java	15

LIST OF FIGURES

Figure 1.	A Portable Corn Cleaner	22
Figure 2.	Two Types of Unit-Cluster Stacking Arrangements	24

THE STORAGE OF IMPORTED CORN IN INDONESIA

INTRODUCTION

The Food and Feed Grain Institute at Kansas State University, under contract AID/csd-1588, Technical Assistance in Food Grain Drying, Storage, Handling and Transportation was originally requested by USAID/Indonesia to observe current rice marketing systems in Indonesia and to suggest a priority program for implementation of recommendations made in the final report of the Weitz-Hettelsater Study of Rice Storage, Handling and Marketing in Indonesia.

In compliance with this request, Dr. Richard Phillips and Dr. Do Sup Chung of the Food and Feed Grain Institute spent three weeks in Indonesia during May of 1973. During this period, unexpectedly we were requested by USAID/ Indonesia and BULOG, Indonesia to provide technical assistance on an urgent corn storage problem confronted in Indonesia.

This report is to describe the corn storage situation in East Java, Indonesia, based on two inspection trips made with USAID and GOI officials and to reiterate suggestions and recommendations given to BULOG for managing the corn storage problem.

BACKGROUND OF CORN STORAGE PROBLEM

Because of an anticipated food grain shortage, BULOG (Bureau of Logistics), Indonesia originally had hoped to purchase rice from the United States. BULOG was unable to purchase rice, however, due to low rice stock in the United States late last year. Instead, they purchased 180,000 tons of No. 2 yellow dent corn from the United States under USAID program loan, with a condition that corn purchased would be used for only human consumption.

Unfortunately, corn shipments arrived in East Java, Indonesia, about two months late (mid-March 1973), after the food grain shortage crisis was over. Of 180,000 tons of corn purchased, approximately 38,000 tons were diverted to other areas, and 142,000 tons were unloaded at Surabaya port and Probolinggo port. Because no bulk unloading facilities were available at these ports, several Vacuvator units were immediately purchased from the United States as an emergency measure to unload the corn. After the corn was unloaded from ships by Vacuvators to warehouses at ports, it was manually bagged in plastic and burlap sacks.

Of 142,000 tons of corn received, about 27,000 tons have already been moved to Central Java, Kalimantan and other places for work and quasi emergency programs. Thus about 115,000 tons of corn are stored in various warehouses in East Java with anticipation that this corn can be used for human consumption after October.

Another unfortunate circumstance BULOG experienced was that they could not distribute or market the corn after they received it because to do so would have damaged the domestic corn market in East Java (mid-March was domestic corn harvesting period in East Java). Therefore, they decided to keep the corn until October, 1973. At the time of our first inspection of the corn, it had been stored for about two months in various warehouses under adverse

climatic conditions for grain storage (high air temperature and relative humidity), with virtually no periodic inspection of the corn condition.

The official grain inspection certificates at the points of origin showed 14.5% moisture content (wet basis) and 3% broken and fines (through 12/64" screen). Unfortunately no GOI official grain inspection certificates at the points of destination were available. All corn shipments received under this program loan were checked for quantity; however, only one shipment of 10,000 MT delivered aboard the ship Lotus Flower was checked for quality by the Superintending Company of Indonesia (SUCOFINDO).

The results of corn quality inspection for corn lost from the ship Lotus Flower are shown below as a reference:

Moisture Content:	Not evaluated.
Broken Kernels:	10.12% (by visual inspection, not with 12/64" screen).
Fines:	0.35%
Shriveled:	0.18%
Foreign Matters:	1.30%
Heat Damaged:	1.62%
Moldy Corn:	About 69 MT out of 10,000 MT

It should be noted that the percentage of broken kernels appears to be very high, but the figure shown above was not determined by 12/64" screen which is used in the United States for determining broken corn kernels and fines, but rather by a visual inspection (hand picked). Therefore, one cannot directly compare the values of broken kernels and fines for grain inspection certificates at the points of origin with those evaluated by SUCOFINDO. Since the evaluation of broken kernels by SUCOFINDO was made by a visual method, a major portion of broken kernels shown above can be considered as sound kernels according to the U.S. Grain Grading Standards.

THE FIRST INSPECTION

After observing the rice marketing system in South Sulawesi, the rice marketing team consisting of Dr. Richard Phillips and Dr. Do Sup Chung of Kansas State University, Mr. William H. Janssen and Dr. Ronald G. Trostle of USAID/Indonesia, Ir. Bambang Gunarto, Department of Agriculture, GOI and IR. A. Alim Fauzi, BULOG, GOI, went to Surabaya to observe the corn storage situation on May 6, 7, and 8, 1973.

Total corn stored by BULOG in various warehouses in East Java is about 115,000 tons at the present time. Of 115,000 tons, about 7,000 tons still in bulk are being bagged manually into burlap and plastic sacks at port warehouse facilities and the remainder, 108,000 tons are in bags.

Before inspecting the corn stored at Surabaya, we had a meeting with DOLOG officials to discuss and review the corn storage situation. At this meeting it was found that no official corn inspection certificates at the time of unloading (mid-March) were available; and furthermore, periodic inspections of corn conditions such as corn moisture content and temperature signs of mold, and insect activities were not made during the two-months storage. Climatic conditions around Surabaya and most parts of East Java are adverse for corn storage because air temperature of above 30°C and relative humidity between 80% to 100 % prevail most of the time during day and night (from August to mid-May). It was also found that there were no corn moisture testers or 12/64" screens available at DOLOG or at go-downs. Therefore, our team inspected the corn with only thermometers, probes and plastic sample bags.

Upon inspection of the corn in bulk at Surabaya port warehouse, a tremendous heating in corn was detected (corn temperature of 50°C, and and apparently rising). It appeared that some of the corn was completely

heat-damaged and about half of the corn in bulk was moderately heat-damaged. Also, definite signs of heating, mold and insect activities, and fermentation odor were detected in bagged corn at a few go-downs. A considerable amount of broken kernels and fines were also observed in both bulk and bagged corn.

In addition, there was practically no air movement or circulation in go-downs because bags of corn were stacked in too large a quantity (not many aisles) and doors and windows at go-downs were shut. Also, poor sanitation practice was observed inside and outside of go-downs.

Four corn samples were collected and taken to the laboratory at P. T. Bogasari Flour Mills, Surabaya for examination. The results of moisture tests by an oven method, broken kernels by a visual method and fines by 1.8 mm seive are shown below:

Sample*	Temperature °C	Moisture %(w.b.)	Broken %	Fines %
Corn in plastic bag	40	13.9	25.0	6.07
Corn in burlap bag	40	15.1	16.7	1.80
Corn in bulk (I)	50	15.4	16.2	2.10
Corn in bulk (II)	50	15.8	10.4	0.80

*These are not representative samples for corn in plastic and burlap bags and bulk.

Note a definite sign of heating (ambient temperature at the time of sampling: 30°C) and the increase in moisture over the original corn. Also note a substantial increase in broken and fines over the corn just before unloading (SUCOFINDO). This might explain the increase in corn damage due to unloading process by Vacuvators.

DOLOG officials insisted that they have to keep the corn till October. We explained to them that the corn under present conditions cannot be kept longer than two months without suffering a considerable loss in quality because of adverse climatic conditions for safe storage, physical conditions of corn and go-downs. Unless the corn is immediately cooled, cleaned (remove small broken and fines), and dried to 12% moisture, the corn cannot be stored safely until October.

Considering various factors and limitations in East Java at the present time, we recommended a few alternative courses of actions for the corn problem. These will be discused in the last section. We strongly urged DOLOG officials to convey our findings on the corn situation and our recommendations to high officials in BULOG such that immediate action should be taken on the corn storage situation.

THE FACTORS INFLUENCING GRAIN STORAGE

Experience and extensive research on grain storage has shown that moisture content and temperature are important factors influencing the rate of grain deterioration. In addition, condition or cleanliness of grain, cracked or broken kernels, fines and foreign materials, if present in excessive amounts, also become a factor in storage.

Of the various factors influencing the rate of grain deterioration, moisture is the most important. If the moisture content is maintained at a low level, grain can be stored for many years with little deterioration even under storage conditions that are otherwise unfavorable. Because the maximum moisture content at which grains can be stored safely depends on the kind and condition of grain, the locality in which it is stored (climates, storage facilities and conditions of facilities), the method of conditioning and the length of the storage period, it is almost impossible to state a definite moisture limit below which a given grain may be stored safely. However, as a rule of thumb, the maximum moisture content at which corn can be stored safely is 13.0% (wet basis).

Many studies on corn storage showed that molds would not develop below a relative humidity of about 70%. Also, if the moisture content of corn is low, there would be less chance of insect development. It should be noted that the relative humidity of air at which 13.0% moisture corn is in equilibrium is about 70% at 26.7^{o}C (Table 1).

Corn, like other grains is hygroscopic. Thus, it will gain or lose moisture, depending on the surrounding air and will eventually come to a specific moisture content when exposed to air of a given temperature and relative humidity. Corn will gain moisture when exposed to air at relative humidities higher than that in equilibrium with corn, and will lose moisture when exposed to relative humidities lower than that

in equilibrium with the corn. The relationship between equilibrium moisture content of corn and relative humidity of air at various air temperatures is given in Table 1. From Table 1, one can see why the corn, originally at 14.5% moisture stored under humid conditions (above 80% relative humidity) in East Java, would have gained moisture.

Another important factor is the temperature of the stored grain. When grains in storage are cool, there is less chance of spoilage. Low temperatures offset the effect of high moisture with respect to the hazards of mold growth and insect development. This is the reason why grains in cooler climates can be stored safely at a moisture content of 1 to 1.5% higher than in warmer climates. However, the air temperatures in East Java are relatively high (above 30°C), and there is not much seasonal or daily air temperature variation. Thus the corn can not be stored safely in East Java unless the corn is dry. The effects of air temperature and moisture content of corn on safe storage time are shown in Table 2.

Corn is a living matter; thus, it respires. As corn itself, molds and insects respire; heat, moisture and carbon dioxide are released. The heat and moisture generated by them either transfers to the surrounding corn, in turn creating a favorable condition for growth of additional mold and insects, or accumulation at local spots and the heating of corn occurs. The widely accepted practice to dissipate the heat accumulated in corn is moving and turning of stored corn, and ventilation or aeration of stored corn. Ventilation of the spaces between the grain surfaces and the roof and between bags is helpful in removing some of the excessive moisture and heat accumulations. Other than this, ventilation of stored dry grains is not necessary to keep it in condition. Under extreme humid conditions, it is detrimental because moisture will be added to grain.

Cracked or broken kernels, fines and foreign materials in excessive amounts are also considered to be an important factors in grain storage.

Table 1. Approximate equilibrium moisture content of corn at various air temperatures and relative humidities.

Air temperature °C	Relative humidity					
	20%	35%	55%	70%	80%	90%
	%	%	%	%	%	%
4.5	8.3	10.5	13.0	15.5	17.5	21.5
15.4	7.8	10.0	12.0	14.0	16.0	19.5
26.7	6.5	9.0	11.0	13.0	15.0	17.8
38.0	6.0	8.0	10.2	12.3	14.2	16.5
60.0	5.0	6.2	8.5	10.3	12.1	14.6

Table 2. Maximum time for storage of shelled corn at various corn moistures and air temperatures.*

Storage air temperature °C	Corn moisture content			
	15%	20%	25%	30%
	Days	Days	Days	Days
24.0	116	12.0	4.3	2.6
21.1	155	16.0	5.8	3.5
18.3	207	21.5	7.8	4.6
15.4	259	27.0	9.6	5.8
12.6	337	35.0	12.5	7.5
10.0	466	48.0	17.0	10.0
7.2	725	75.0	27.0	16.0
4.5	906	94.0	34.0	20.0
1.8	1140	118.0	42.0	25.0

* The times given are those above which mold growths will cause enough loss in corn quality to bring about a lowering of grade.

They provide favorable conditions for mold, bacteria and insect development. It is commonly observed under practical storage conditions that corn containing a high percentage of damaged kernels, or showing evidences of unsoundness, is much more likely to heat in storage than is sound corn of the same moisture. In unsound corn the nutrients required for the growths of molds, bacteria and insects are readily available. Because respiratory activity in a mass of corn is believed to be largely that of molds, bacteria and insects rather than that of corn itself, unsound corn might be expected to exhibit more rapid respiration than sound corn.

Another factor that should be considered in safe grain storage is the cleanliness of premises of where the grain is stored. If dirty sacks rags, woods, metal pieces, and other junk are inside or outside the storage buildings, molds, bacteria, insects and other pests can easily be attracted by them. Such poor sanitation is indeed another contributor to corn spoilage.

In summary, it can be realized that high air temperature and relative humidity of air surrounding corn, coupled with poor physical conditions of corn and go-downs in East Java definitely attributed to corn deterioration.

THE SECOND INSPECTION

After the results of the first inspection trip on the corn storage situation were transmitted to high officials in BULOG, an emergency meeting was called by General Achmad, Director of BULOG, on May 16, 1973, to discuss further the corn storage problem. Those who were present in the meeting were General Achmad, two deputy directors of BULOG, Ir. Muslimin Nasution and other GOI officials, Dr. Richard Phillips and Dr. Do Sup Chung of Kansas State University, Mr. W. H. Janssen and Mr. John W. Logan of USAID/Indonesia and Mr. U. Hinrichson of Badische Anilin and Soda-Fabrik Ag (BASF). We reported the findings of our brief investigation on the corn problem and suggested a few courses of action programs for the corn. The action Programs suggested were (1) to distribute or market the corn immediately in the country, (2) to market the corn immediately to other countries, or (3) to cool and clean the corn immediately and dry it to 12% moisture in order to keep it until October. The action program (2) was suggested in order to avoid the danger of damaging the domestic corn market. However, this course of action porgram cannot be implemented because of the condition imposed by USAID/Indonesian program loan.

At the meeting, Mr. Hinrichson of BASF suggested the treatment of corn with propionic acid as the most feasible solution for the corn storage problem in Indonesia. We seriously questioned his suggestion and strongly objected to the use of propionic acid on the corn for human consumption because suggestion (3) should be the better and more effective method to condition the corn for safe storage. To our knowledge propionic acid treated grain has not been used for human consumption. Furthermore, it would definitely give the corn a sour taste which may be objectionable to consumers.

Even in a temperate zone, the use of propionic acid on the corn for animal feeding purposes has not been widely accepted. Also, to our knowledge, no one has yet studied the effectiveness of propionic acid on the grain for even animal feeding purposes on a commercial scale under a tropical climate. Therefore, in our opinion the use of propionic acid on the corn for human consumption should be a last resort for conditioning the corn in Indonesia. More discussion on this matter will be given in the last section of the report.

General Achmad proposed to form a special investigation team to inspect the corn conditions at various go-downs in East Java, and to draft the action programs for the corn storage problem to be presented at the Governors' meeting on May 18, 1973. On May 16, Mr. John W. Logan of USAID/ Indonesia, and Dr. Do Sup Chung of Kansas State University left Jakarta to Surabaya with General Achmad, Ir. Muslimin Nasution, other GOI officials, Mr. Hinrichson and Dr. G. Richle of BASF. There our team joined with DOLOG officials and SUCOFINDO personnel (commissioned for sampling the corn and checking corn moisture contents and temperatures).

Our investigation team was divided into two groups and each group was assigned to inspect the corn condition at specified go-downs throughout East Java. The locations of go-downs inspected by each investigation group and quantities of corn stored at each go-down are shown in Table 3. After two days' intensive investigation on the corn situation, the two groups reported conditions of corn at each go-down to General Achmad. An action program for the corn problem was drafted based on the investigation. A copy of the draft to be presented at the Governors' meeting by General Achmad is included in the report.

Fortunately, it appeared that there was no appreciable change in the condition of the corn stored in bags since the first inspection trip.

CONDITION OF CORN IN EAST JAVA BASED ON INVESTIGATION

16 AND 17 MAY

Of 142,000 Tons of corn received, 27,000 Tons has been moved to Central Java, Kalimantan and NTT for Work and Quasi Emergency Program.

As A result of investigation of the remaining 115,000 tons stored in East Java the following conclusion are reached :

1. 100 to 200 tons ex Lotus Flower, completely damaged, now of no value and must be destroyed immediately.

2. ± 7000 tons still in bulk storage in diepzee godown no. 401 and 200 tons in bulk in no. 400 must be immediately spread out for cooling by means of Vac-u-vators and manual turning. Quantities which have been bagged and stored in these godowns must be moved to various Kabupaten within 3 weeks.

3. About 3000 tons of the same lot (Para 2) has been bagged and moved out of the port area. This must be located and carefully examined for suitability for consumption.

4. Approximately 30,000 tons must be consumed within three weeks. This also will be distributed to Kabupaten.

5. Approximately 75,000 tons is in fair condition, after cooling and cleaning this quantity should be properly restacked and fumigated in more suitable godowns. It should then be suitable for consumption through July 1973.

6. If the 75,000 tons (para 5) must be stored beyond July, the following additional actions must be taken :
   A. Mechanical drying to 12 % moisture content or
   B. Chemical treatment with Luprosil/Propionic acid.

7. In conclusion the investigation has ditermined that the corn is at this time suitable for human consumption except for that amount stated in para No. 1 above.

Surabaya , May, 17 , 1973

1. DO SUP CHUNG , Ph.D
Kansas State Univ.

2. Mr. John W. Logan
USAID

3. Mr. U. Hinrichsen
[illegible]

4. Dr. G. [illegible]
[illegible]

1. ACHMAD TIRTOSUDIRO
KABULOG

2. Ir. [illegible] Nasution
Barobina Bulog

3. Drs. Irfai
Wakadolog Jatim

4. Supranto

Table 3. The locations of go-downs and quanities of corn stored at each go-down in East Java.

The First Group		The Second Group	
Locations and names of go-downs	Quantity T	Locations and names of go-downs	Quantity T
Diepzee		Surabaya	
400 and 401	6,149	Kel. Kesuma	1,883
504	4,300	Hasians	2,300
400 and 401	14,800	Berkat	6,800
119 and 121	2,700	Pergoangan	2,000
		P. A.	3,216
Surabaya		Pelita Samodra	409
P. I. D. C.		Dobek II	550
- Lawu		Dharma Bhaktiku	1,038
- Baluran	10,070		
- Bromo		Luar Surabaya I	
		Mojokerta	
- Kalimas Barat	6,700	- Krajan Jaya	200
- Indrapura			
		P. E. D.	2,000
Pendowo			
- Kodau 2		Mojoagung	
- Kodau 3	6,680	- Tani Mukti	720
- Kodau 4			
- Kodau 5		Kediri	
- Werkudoro	1,883	- Nabati	3,586
Antar Jasa	5,290	Tulungagung	
		- Hadi Susanto	1,652
Irama Tiga	2,331		
		Madium	
Luar Surabaya II		- Catar Jaya	1,196
Wonocolo			
- H. Nu Antara	800	Ponorogo	
		- Nabati	140
Sidoarjo			
- Panjaya	5,210		
Lawang			
- Bahari	6,000		
Probolinggo			
- Dharmabaktiku			
- Sehart			
- Pelni	7,500		
- T. U. Bhakti			
- P. I. D. C.			
Panarukan			
- Jakarta Lloyd	7,000		

This was probably due to relatively drier weather during the ten days between inpsections. About 7,000 tons of corn still in bulk storage at Diepzee go-down No. 401 and about 200 tons in bulk at go-down No. 400 showed signs of continuous heating (corn temperature: 55°C).

Approximately 15,000 tons of corn in bags at go-downs Nos. 400 and 401 showed signs of heating and about 15,000 tons of corn stored at Anta Jasa, Kodau and Panarukan showed signs of mold, insect and fermentation activities. In addition, about 100 tons of corn from the ship Lotus Flower and stored at go-down No. 401 and about 100 tons at go-downs Nos. 119 and 120 were completely damaged by molds and bacteria. Thus, it appeared that about 75,000 tons stored throughout East Java are in fair condition and should be suitable for consumption through July, 1973, after cooling and cleaning. If the corn must be stored beyond July, it must be dried mechanically to 12% moisture.

In general, poor sanitation practices inside and outside of go-downs and lack of air movement and air circulation in go-downs were observed. Corn bags were stacked too high and too long, and windows and doors at go-downs were shut. These should be opened all the time except rainy days. The only suitable go-down found for relatively safe storage in East Java was Bahari (10,000 T capacity) at Lawang where the average air temperature is a moderate 22-26°C, and the average relative humidity of air is relatively low compared to other places (70%).

SUGGESTIONS AND RECOMMENDATIONS

Based on two brief inspections of the corn stored in East Java and also considering climatic and go-down conditions, availability of equipment for handling and conditioning corn, and other factors, the following suggestions and recommendations for the corn storage problem confronted in Indonesia were made:

1. About 100 to 200 tons of corn were completely damaged by mold and bacteria. The damaged corn must be removed from go-downs (Nos. 119 and 121) and discarded immediately. Or, some of this corn may be sold for production of commerical alcohol.

2. About 7,000 tons still in bulk in Diepzee go-down No. 401 and about 200 tons in bulk at go-down No. 400 must be immediately cooled by either manual turning or Vacuvators. Because of excessive corn breakage, the use of Vacuvators for cooling the corn is not a good practice. But it would be justifiable under the present conditions since time is a critical factor, and no other mechanical devices for cooling are available.

   After cooling, the corn should be checked for the degree of heat damage. Probably some of the corn in the middle or bottom of the pile might have been completely damaged by heat. The heat-damaged corn would not be suitable for human consumption, but would be suitable for animal feeds. About 7,000 tons of corn (less completely heat-damaged corn) after cooling must be distributed to various Kabupatans within three weeks for consumption.

3. About 3,000 tons of corn (originally from the above 7,000 T lot) which have been bagged and moved out of the port area should be located and carefully examined for suitability for consumption. Also this corn should be distributed to various Kabupatans within three weeks.

4. About 15,000 tons of bagged corn at go-downs Nos. 400 and 401 showed signs of heating and slight signs of other deterioration. This corn should be moved to various Kabupatans within three weeks.

5. Also about 15,000 tons of bagged corn stored at go-downs in Anta Jasa, Kodau and Panarukan showed signs of mold, insect and fermentation activities. This corn should be distributed to various Kabupatans within three weeks.

Some of the corn in (4) and (5) may be kept for a longer period after cooling, cleaning and drying. However, it would be wise and desirable for BULOG to distribute this corn to various Kabupatans, rather than attempt to handle and condition the 30,000 tons of corn in question. While BULOG is saving this corn other lots of corn in fair condition may be lost because time is a critical factor now; and no mechanical devices for corn handling, cleaning and drying are available at go-downs.

Since the quantity of corn at each Kabupatan will be relatively small, handling and conditioning of the corn for further storage, if desirable can easily be accomplished at Kabupatans. Furthermore, BULOG's overall corn storage problem will be considerably reduced by distribution of the 30,000 tons of corn in question at various Kabupatans.

6. Thus, it appears that of 115,000 tons stored in East Java, about 75,000 tons of corn are in fair condition. However, they must be cooled and cleaned and properly restacked and fumigated in more sutiable go-downs. They would then be acceptable for human consumption through July, 1973.

Go-downs in good physical condition observed by the first group were those at Lawang, Wonocolo, Sidoargo and Probolinggo. However, the only suitable go-down for relatively safe storage in East Java was Bahari (10,000 T) at Lawang located in the highlands where the average air temperature is moderate (about 22-25°C), and the average relative humidity of air is low compared to other locations (about 70%). If such air conditions would exist until October, the corn stored at Lawang after cooling and cleaning may be safely stored with proper management. Therefore, BULOG should try to locate additional storage spaces around Lawang, and the corn stored in the lowlands should be transferred to these places. Then BULOGS's corn storage problem would be considerably reduced.

7. About 75,00 tons of corn in (6) or perhaps 69,000 tons (less 6,000 tons at Lawang) must be dried mechanically to about 12% moisture content (wet basis), if the corn must be stored beyond July. It is suggested that the corn to be used for human consumption should not be treated with propionic acid to prevent deterioration. In addition to the reasons given previously for not recommending the use of propionic acid on the corn for human consumption, the cost of conditioning corn with propionic acid is expected to be much higher than that of drying in Indonesia.

The cost of the chemical alone needed to treat one ton of corn quoted by Mr. Hinrichson of BASF was about $6.25 (2.5 rps/Kg. of corn). While the average total cost of rice drying reported in "Economic and Engineering Study, Rice Storage, Handling and Marketing, the Republic of Indonesia" by Weitz-Hettelsater Engineers (1972), is about $4.09/ton gabah for "Pelita" batch dryer, $2.06/ton gabah for "Diesel-Engine" batch dryer,

$4.57/ton gabah for "Kongskilde" batch dryer and $2.24/ton gabah for "In-Bin" batch dryer.

It should be remembered that additional fixed costs (applicators: about $80,000 F. O. B.) and variable costs must be incurred for conditioning corn with propionic acid, and the applicators will not be utilized most likely more than once in Indonesia.

It should also be noted that the drying costs given include all variable and fixed costs and are based on moisture reduction from 24% to 14% for gabah (10% reduction). Although the costs for drying given are for drying gabah, the costs for corn drying would be much less than the costs for rice drying. Since only a maximum of 4% moisture reduction of the corn stored in East Java is needed, the actual corn drying costs by various batch dryers mentioned would be considerably lower than those given.

8. Cooling and cleaning - Since no mechanical corn cooling and cleaning devices are available, simple hand-screen cleaners with a screen opening of between 12/64" and 14/64" or cleaners such as shown in Figure 1, should be constructed. Also BULOG should utilized rice dockage machines manufactured in Indonesia, for corn cleaning simply by replacing the present screen with 12/64" or 14/64" screen.

During the cleaning process, corn cooling can be accomplished as well as a slight reduction of moisture. Broken and fines separated during cooling and cleaning operations should not be stored, but marked immediately for human consumption if no mold is present. During the cleaning process, corn quality can also be checked and damaged corn should be separated from undamaged corn. Damaged corn must be marked for animal feed. More detailed discussion on the types of damaged corn and its utilization will be given later.

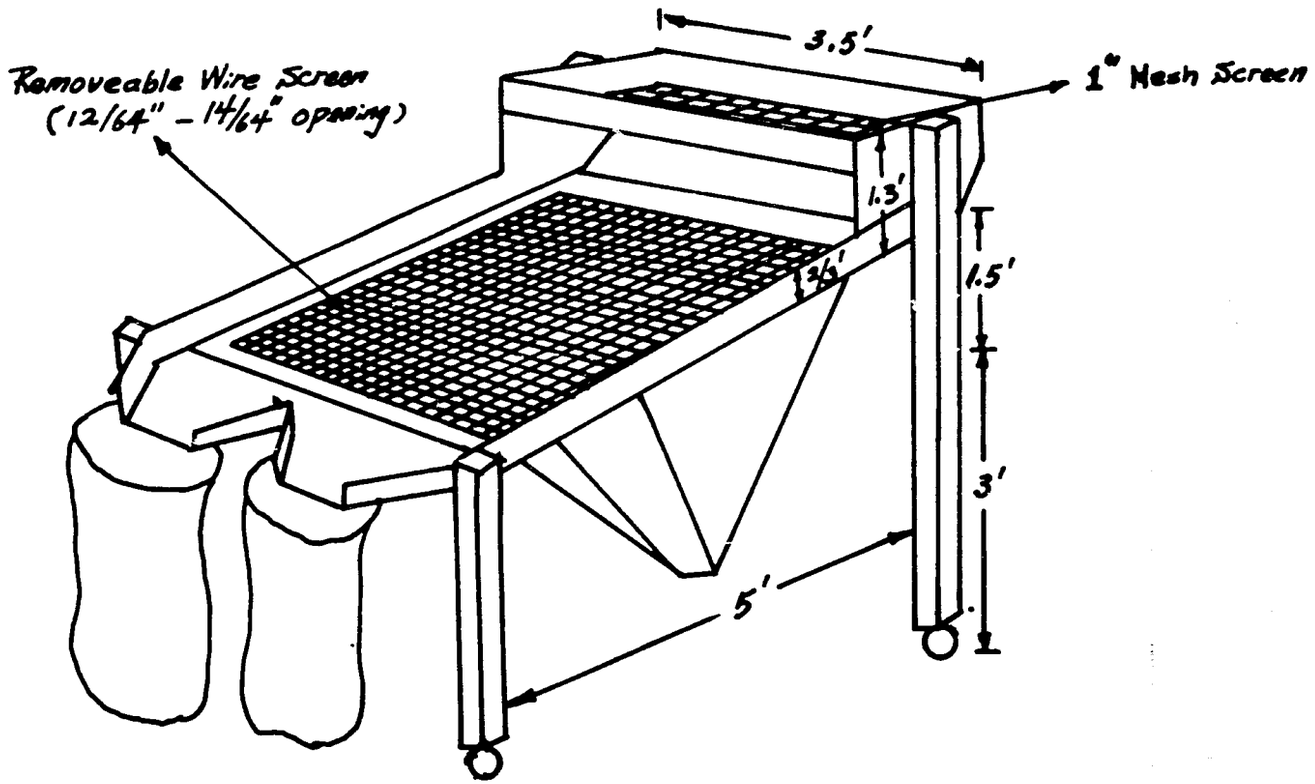

Figure 1. A Portable Corn Cleaner.

9. Sanitation - After cooling and cleaning the corn and before storing it, all the unnecessary objects must be removed from both the exterior and interior of the go-down. The go-down must be cleaned, and insecticides (e.g. Methoyochlor) should be applied in order to prevent growth of micro-organisms and insects. Furthermore, holes and cracks in the floor, walls and roof must be repaired to prevent leakage of rain and intrusion of rodents and birds. Wooden pallets must be dried in the sun and insecticides applied in order to prevent insects from nesting in them.

10. Stacking - Bagged corn should be properly stacked and arranged to provide enough middle and side passage for patrolling between the stacks, shipping and receiving operations, and good ventilation. Besides, good housekeeping of go-down can be more easily maintained.

    There are many types of stacking arrangements; but, as examples, two types of unit-cluster for stacking are shown in Figure 2. These arrangements are very effective in making full use of the capacity of go-downs in three dimensions. Also, they allow for good ventilation. The stack should not exceed more than four unit-clusters length at the base, and the height of the stacks should not exceed more than 22 layers of bags (8-bag length at the base and 22-bag layer height).

11. Drying - The corn that will be stored beyond July till October must be dried to 12% moisture content. Because of high relative humidity (above 70%) of air in most parts of East Java throughout the year, drying of corn by natural air (sun drying) to below 14% moisture is practically impossible except in Lawang areas. However, drying of corn to 12% moisture can be accomplished by mechanical dryers. It was found that no corn dryers are available at the present time in East Java, but many units of batch-type

Unit - Cluster (I)

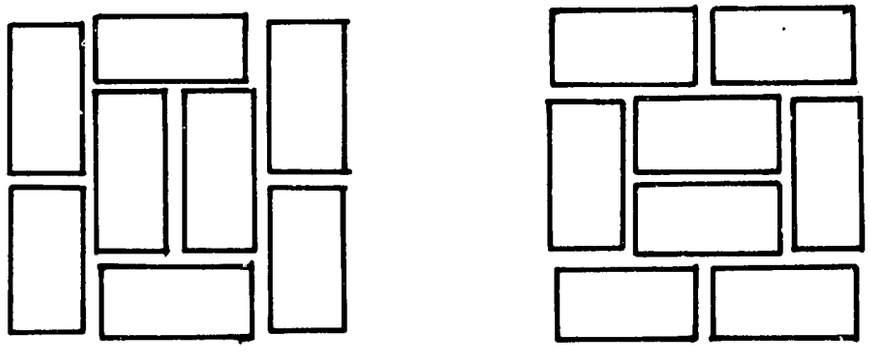

First Pile Second Pile

Unit - Cluster (II)

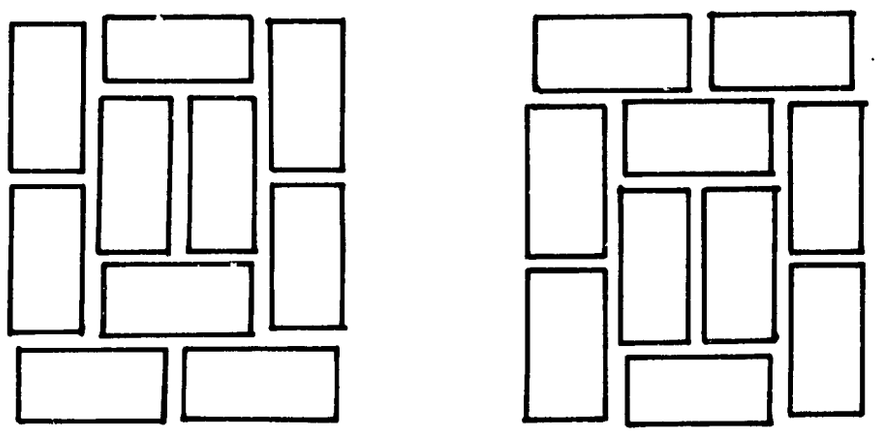

First Pile Second Pile

Figure 2. Two Types of Unit-Cluster Stacking Arrangements.

rice dryers are located throughout East Java. Therefore BULOG should utilize these dryers for corn drying.

Though "Pelita" batch dryer, other Japanese batch-type dryers (upright or circulating type), "Lester" batch dryers (Diesel-Engine), and "Kongskilde" batch dryers are designed for rice, these dryers can easily be used for corn drying. The actual drying capacitie of rice dryers mentioned above are usually rated at 10% reduction of gabah (24% to 14% moisture) and the 10% moisture reduction was done by two or three passes. The drying capacities of these dryers for corn drying can be doubled even at recommended operating conditions for rice drying because a maximum 4% moisture reduction from corn stored in East Java is all that is needed. Unlike in rice drying, less care is required in corn drying. Therefore, the drying capacity of rice dryers for corn drying can easily be increased by either increasing air flow rate, drying air temperature or both. In rice drying, air temperatures are usually between 110° to 120°F, but in corn drying, the corn is usually dried at 140° to 180°F with air flow rates of 1200 cfm/T (cubic feet per minute per ton) to 4000 cfm/T. Thus air flow rates and drying air temperatures of rice dryers should be increased for corn drying.

It should be noted that "Pelita" Japanese batch dryers (flat-bed type) and "Lester" batch dryers can be used for either bulk or bagged corn. After drying, the corn must be cooled to an ambient temperature by blowing unheated air on it. The cooling of corn after drying is an important step before storage. Since the average relative humidities of air (above 80%) in East Java will increase from August on, the corn stored will gradually gain moisture from surround air. Therefore the drying of corn to 12% moisture content is recommended.

12. Daily management - After the stacking of bagged corn, the go-down must be cleaned once again. An application of Pyrenone Grain Protectant (PGP) powder or rat repellent to the entrance and other openings of the go-down is very effective in preventing the attack of insects and rodents.

It is necessary to patrol the go-down in order to prevent the occurance of damage to the stored corn, or keep the damage to a minimum by detecting it early enough if it has already occurred

The daily inspection should be practiced at regular intervals to detect any disorder in arrangement of bags, broken parts of the go-down, theft, leaking of rain, damage from insects, micro-organisms and rodents, change in grain temperature and moisture content, change in air temperature and relative humidity and so on. Changes in grain temperature and moisture, and air temperature and relative humidity in and out of a go-down must be observed and recorded with special care in order to detect or prevent the occurrence of corn damage.

Each go-down should be equipped with thermometers (at least two), a hygrometer, a sample probe, sample bags, sample pan, and if possible, a portable moisture tester for corn (e.g. Burrows). Because high temperature and humidity in go-down definitely help insects and micro-organisms develop, it is extremely important for go-down management to keep a keen watch on temperature and humidity and to provide efficient ventilation.

An abnormally high grain temperature indicates spontaneous heat generation resulting from too much moisture in grain and micro-organism and insect activities. Thus, the bags or pile of bags

indicating a sign of heating or abnormally high grain temperature should be isolated from the stack and cooled. After cooling it is necessary to exterminate insects by fumigation (e.g., Phostoxin), if the heating is caused by considerable insect activity.

If the heating is caused by micro-organisms or high moisture in corn, the corn should be dried to prevent further deterioration (at least 13% moisture). Or, instead of storing again, the corn slightly damaged by mold or bacteria should be marketed for animal feed, but not for human consumption. It should be recommended that the corn damaged considerably by mold or bacteria should not even be used for animal feed.

13. Utilization of damaged corn - Corn that has undergone fermentation, serious spontaneous heating, or has become musty, moldy, infested with insects or rodents is ordinarily considered unsuitable for human consumption. However, physically damaged corn (broken and fines) can be used for human consumption if it did not undergo the above deterioration.

The corn undergone the above mentioned deterioration (except physically damaged corn) is suitable for animal feed. If its quality is not too bad, it may be fed directly, or may be mixed with better quality products. Although the feeding of damaged grain is generally considered an acceptable practice, it should be remembered that such grain is likely to be inferior to undamaged grain in its nutritive quality and that in some instances, it may be very toxic (aflatoxins, toxic substances produced by certain spieces of mold and the fungus, Gibberella). Poultry are usually less susceptible than horses and sheep to any lasting harmful effects of damaged grain, and cattle and swine are still less likely to be adversely affected by such feed.

Corn that has deteriorated to such an extent that it is not suitable for use as feed can be used for the production of commerical alcohol. The yield of ethyl alcohol obtained from such products is comparable with that obtained from sound products unless the deterioration has progressed to such a point that a significant amount of the carbohydrates has been destroyed.