USAID | KOSOVO

NGA POPULLI AMERIKAN
OD AMERIČKOG NARODA

# ANNUAL WORK PLAN, 2010

## USAID KORPORATA ENERGJETIKE E KOSOVES (KEK) NETWORK AND SUPPLY PROJECT

CONTRACT/ORDER NUMBER EPP-I-04-03-00008-00

January 2010

**FINAL DRAFT**

This publication was produced for review by the United States Agency for International Development.

It was prepared by PA Government Services Inc.

# Annual Work Plan 2010

USAID KORPORATA ENERGJETIKE E KOSOVES (KEK) NETWORK AND SUPPLY PROJECT

Contract Number EPP-I-00-03-00008-00

Task Order No. 4

January 2010

**USAID**

Mr. Arben Nagavci
Cognizant Technical Officer
USAID/Kosovo
Prishtina, Kosovo

**PA Government Services Inc.**

Masoud Keyan
PA Government Services, Inc.
4601 North Fairfax Drive, Suite 600
Arlington, VA 22203
Tel: +1 571 227-9000
www.paconsulting.com

## Table of Contents

*1. Introduction* ..... *4*

I. Realigned Objectives and Subtasks ..... 4

II. Project Team ..... 5

III. Cross-Cutting Theme ..... 6

IV. Performance Based Management System (PBMS) ..... 7

V. Indicators and Reporting ..... 7

VI. Timeline for Implementation of Activities ..... 7

VII. Training ..... 7

VIII. Staffing ..... 7

*Subtask 1: Support Management and Operation to Maintain Asset Value* ..... *8*

*Subtask 2: Prepare Technical and Contractual Documentation for Investor Due Diligence in kek DISTCO* ..... *10*

*Subtask 3: Provide Advisory Support in Privatization Process* ..... *11*

*Subtask 4: Strengthen Skills and Technical Capacity of Counterparts* ..... *12*

*Subtask 5: Support Management Post-Privatization* ..... *13*

*Subtask 6: Prepare a Thermal Power Plant Kosovo B Investment Requirement and Rehabilitation Feasibility Study* ..... *14*

*Subtask 7: Prepare Technical and Contractual Documentation for Investor Due Diligence* ..... *15*

*Subtask 8: Strengthen Skills and Technical Capacity of Counterparts* ..... *16*

*Subtask 8: Strengthen Skills and Technical Capacity of Counterparts* ..... *16*

*APPENDIX A: Organization Chart* ..... *A- 1 -*

*APPENDIX B: Activities, Outcomes/Results and Timelines* ..... *B- 1 -*

*APPENDIX C: Performance Based Management System* ..... *C- 1 -*

## *1. INTRODUCTION*

This work plan has been prepared as part of the requirements of Contract/Order Number EPP-I-04-03-00008-00 between the US Agency for International Development (USAID) and PA Government Services Inc. (PA) titled "Korporata Energjetike e Kosoves (KEK) Network and Supply Project. This work plan also includes a Performance-Based Management System (PBMS), as required under the Task Order. It is incorporates changes in the scope of work detailed in modification X of the task order which extended the project through December 16, 2009. This work plan covers the time period January to December 2010.

### I. Realigned Objectives and Subtasks

The updated project objectives are:

- *Objective 1: Support for technical preparation of the Distribution Company for privatization (Task Area I)*
- *Objective 2: Assistance with post-privatization implementation for the Distribution Company (Task Area I)*
- *Objective 3: Privatization support for the Thermal Power Plant Kosovo B (Task Area II)*

The Task Areas, Objectives, and corresponding subtasks coverage are:

| No | Task Area 1 Subtasks | Objective | | |
|---|---|---|---|---|
| | | O1 | O2 | O3 |
| 1 | Support Management and Operation to Maintain Asset Value | X | X | X |
| 2 | Prepare Technical and Contractual Documentation for Investor Due Diligence | X | | |
| 3 | Provide Advisory Support in Privatization Process | X | | |
| 4 | Strengthen Skills and Technical Capacity of Counterparts | X | X | |
| 5 | Support Management Post-Privatization | | X | |
| **No** | **Task Area 2 Subtasks** | **Objective** | | |
| | | O1 | O2 | O3 |
| 6 | Prepare a Thermal Power Plant Kosovo B Investment Requirement and Rehabilitation Feasibility Study | | | X |
| 7 | Prepare Technical and Contractual Documentation for Investor Due Diligence | | | X |
| 8 | Strengthen Skills and Technical Capacity of Counterparts | | | X |

The Objectives and Tasks in this Work Plan are fully aligned with the Tasks and Objectives in the Work Plan 2008-2009, with Sub-Task 1 clearly serving as a link between the two consecutive work plans. The activities under Sub-Task 1 follow from and build upon the results and achievements in the previous work plan thus supporting the strategy to preserve the value of KEK's assets through achieving sustainability of the trend of continuous improvement in the company's management and operations.

The descriptions in the following sections include: major activities under each objective and task, the expected specific outcomes and accomplishments for the task; personnel required within the PA team to complete the task; training requirements/plan; and discussion of collaboration with Counterparts and other Stakeholders, and other USAID-funded Partners.

## II. Project Team

In accordance with its proposal and subsequent negotiations with USAID PA has expanded its team to 15 expatriate persons, 17 local specialist and 11 short term advisors to accomplish the requirements of the task order.

The key personnel of the project include:

- Masoud Keyan - Project Manager, Chief of Party, and Advisor to the Managing Director.
- Llyr Rowlands - Deputy COP & Legal Advisor
- Dean White – Home Office Project Manger
- Thomas Smith - Supply Management Advisor
- Krassimir Kanev - Finance and Accounting Advisor

The full resident project team is as follows:

| No. | Name | Resident Advisor Positions |
|---|---|---|
| 1 | Masoud Keyan | Project Manger, Chief of Party & Advisor to the MD |
| 2 | Llyr Rowlands | Deputy COP, Legal Advisor |
| 3 | Thomas Smith | Supply Management Advisor |
| 4 | Revaz Ghlighvashvili | Electricity Supply Operations Advisor |
| 5 | Gela Kereselidze | Electricity Supply Operations Advisor |
| 6 | Irakli Babukhadia | Electricity Supply Operations Advisor |
| 7 | Jeyant Tamby | Network System Management Advisor |
| 8 | Gurgen Hakobyan | Network System Operations Advisor |
| 9 | Krassimir Kanev | Finance and Accounting Advisor |
| 10 | Givi Jgarkava | Anti-Corruption Advisor |
| 11 | Shalva Rukhadze | Anti-Corruption Advisor |
| 12 | Jeannelle Blanchard | Admin Deputy Chief of Party/PR Advisor |
| 13 | Davit Gharagedyan | IT System Advisor |
| 14 | Aleksandre Apkhadze | Human Resources Advisor |
| 15 | TBD | Generation/Engineering Management Advisor |

Planned short term contributors are:

| No. | Name | Short Term Advisor Positions |
|---|---|---|
| 1 | Tatyana Marshall | Training Advisor |
| 2 | Miguel Franco | Environmental Impact Advisor |
| 3 | Egon Kimel | Electric Generation Engineer |
| 4 | Phil Hoover | Electric Generation Engineer, Hydro |
| 5 | John Shortt | Engineer |
| 6 | John Hoffman | Engineer |
| 7 | Roger Siros | Engineer |
| 8 | Paul McDonnell | Engineer |
| 9 | Warren Chase | Project Finance Specialist |
| 10 | TBD | Communication & Outreach Specialist |
| 11 | TBD | Legal Specialist |

A project organization chart is provided in Appendix A.

## III. Cross-Cutting Theme

USAID's draft 5-year Strategic Plan for Kosovo identifies a number of cross-cutting factors as having a profound impact on the development environment in Kosovo. They are, specifically:

1) Youth;
2) Gender;
3) Anti-Corruption;
4) Minority reintegration; and
5) Human capacity building.

Youth will be specifically targeted throughout this work plan – for instance, through coaching and training and through support for management policy-making that places youth integration in the center of KEK's preparation for privatization.

PA recognizes that women, including girls, face a very different set of circumstances and opportunities in Kosovo's economic environment. In carrying out work plan activities, PA and its subcontractors (indicated herein as "PA") will be sensitive to gender issues and make every attempt to ensure participation of all groups in project activities, as well as identifying and removing gender based barriers to achieving the tasks outlined in the work plan. Gender considerations will be factored into training plans and PA will provide training opportunities with an awareness of gender considerations and, if appropriate seek to increase participation of women in the sectors in which the Project works. PA will report gender disaggregated data as and when appropriate. PA will also try to promote gender equality in leadership and management positions in KEK

Activities in this program will have direct impact on corruption and human capacity building. Anti-corruption measures are included in every area of assistance in this work plan.

The PA team will actively cooperate with other USAID contractors in all of the areas listed in the cross-cutting theme.

## IV. Performance Based Management System (PBMS)

PA has developed as part of this work plan, a Performance-Based Management System (PBMS) by tasks and objectives for monitoring the performance and impact of its activities on the basis of the following groups of indicators:

1. Key Indicators
2. Milestone Indicators
3. Training Indicators
4. Contextual Indicator

The link between the activities in work plan and the indicators in the Performance Based Management System is illustrated in the following relationship:

**Inputs (= Activities (e.g., under sub-tasks)) including timelines ⇨ Outcomes (= Targets/ Accomplishments)/Results ⇨ Indicators**

The Key Indicators represent aggregate measures of the impact of all activities included in the work plan while the deliverables, associated with each of the activities in the work plan, represent milestone indicators in the PBMS.

The training indicators measure the outcome of training, which as a cross-cutting activity is included under each subtask and separately is the focus of two of the subtasks (see VII below).

The contextual indicator is designed to measure the impact of all activities in the work plan on the people and economy of Kosovo

## V. Indicators and Reporting

PA will continue to work with KEK to improve its internal management information systems (MIS) to achieve daily, weekly, monthly, quarterly and annual reports. The PBMS described herein is for the specific use of USAID.

The indicators planned under the PBMS including targets and timelines are shown in Appendix C (PBMS). Performance Indicator Reference Sheet and Data Quality Assessment for Key Indicators, Training Indicators, and Contextual Indicator are an attachment to the PBMS.

Measurement and progress toward achievements under the PBMS will be documented in PA's Quarterly reports to USAID.

## VI. Timeline for Implementation of Activities

A schedule of activities with their status and the timeline for their implementation is provided in Appendix B.

## VII. Training

Each task area contains training needs including on the job training, as well as classroom training in collaboration with USEA and others. Additionally two of the subtasks (Subtask 4 and Subtask 8) are specifically focused on capacity building and knowledge transfer trough conducting different forms of training including seminars, round-table discussions, train-the-trainer sessions, etc.

## VIII. Staffing

Please refer for the organization chart in Appendix A for the project management team and staffing plans.

## *SUBTASK 1: SUPPORT MANAGEMENT AND OPERATION TO MAINTAIN ASSET VALUE*

The focus of this subtask is to ensure continued assistance to KEK management for ongoing development and implementation of internal policies and procedures to maintain and approve accounting and financial management, internal legal and regulatory affairs, performance in billing and collections, procurement, strengthening internal controls and anti-corruption efforts, and effective human resources management processes throughout all aspects of KEK's functional operation. The aforementioned support is intended to preserve the asset value of KEK Distribution Company's (DistCo) functions through privatization.

This subtask builds on the work done and success achieved to date. The main change in focus will be to dramatically increase PA's efforts to reform the commercial processes in the districts. The efforts to roll-out the successful pilot distribution and supply program and its improved variant, throughout all of the KEK service territories (except for minority enclaves, which will be addressed through a separate initiative) will be increased and additional experts (who will work mainly in the districts) will be added to the PA's team.

We will continue to advise the Management Director on overall management of the company, advise the Chief Financial Officer of KEK on business planning, budgeting, reporting, tariffs, finance and accounting for each unbundled company, and other financial management issues. Our advisors will also continue their ongoing advice to other Division heads and District Managers.

**Training**

Assistance and coaching in developing leadership skills will be provided to the MD on a daily basis, including communicating expectations, motivating employees, and planning and organization. PA will also identify classroom training needs including content to be provided by USEA and others.

**Collaboration with Counterparts, Stakeholders, and Other USAID-funded Partners**

Discussions will be held with the stakeholders and, where appropriate, other USAID implementing partners to determine areas that KEK management needs to address to improve KEK's results in general.

**Specific Activities and Expected Outcomes**

1.1. *Activities:* Assist with the development and implementation of new internal policies and procedures.

*Outcomes:* A more effective budgeting process for the development of the 2010 and 2011 budgets; Capability to preempt any new encumbrances, liens, or liabilities; Consistent application of new cost control procedures.

1.2. *Activities:* Support business planning and budgeting.

*Outcomes:* Business Plan and Action Plans for 2010; Board approved 2010 & 2011 Capital and Operation and Maintenance budgets; Achievement of the Business Plan targets for 2010 – 2011.

1.3. *Activities:* Recommend improvements to billing and collection and monitor their implementation in the field on a daily basis.

*Outcomes:* Capability to sustain continuous improvement in billing and collection.

1.4. *Activities:* Provide support to accounting and financing.

*Outcomes:* Un-bundled financial statements; Improved quality of accounting reflected in more favorable auditor opinions; Full compliance with the Terms and Conditions for providing banking services by Raiffeisen Bank; Full compliance with the Credit Facility Agreements concluded with the Government in connection with the rehabilitation of Kosovo A and B power plants and the opening of the Sibovc SW mine.

1.5. *Activities:* Provide assistance in legal and regulatory affairs.

*Outcomes:* Quality tariff application in 2010.

1.6. *Activities:* Provide active support to Internal Audit and Anti-corruption.

*Outcomes:* Decrease in commercial losses; Substantial reduction of waste and theft; Elimination of corruption; Improvements in efficiency and effectiveness

1.7. *Activities:* Provide support to other functions in KEK on an as needed basis, e.g. Network, Human Resources, Information Services, Public Relations a Communications. *Outcomes:* Improved capability of KEK (DistCo) to manage and preserve assets.

1.8. *Activities:* Advise KEK top management on other management and operational issues. *Outcomes:* Visible leadership by the MD with clear performance expectations from all levels of management.

### *SUBTASK 2: PREPARE TECHNICAL AND CONTRACTUAL DOCUMENTATION FOR INVESTOR DUE DILIGENCE IN KEK DISTCO*

Pursuant to the recent registration of the new KEK DistCo, PA will assist KEK with the unbundling of its distribution assets and liabilities into the new company. PA will also support the preparation of all technical and contractual documentation required for investor due diligence in the DistCo privatization. PA will work to ensure adequate analysis of and planning for least-cost dispatch alternatives, which may involve procurement of appropriate software. PA will support the preparation of the draft and final tender package as needed by the GOK's Transaction Advisor for DistCo privatization.

**Training**

Training will be needed as the structure and organization of DistCo are changed. The PA team will work with KEK to prepare and schedule the training. The training will be conducted by PA.

**Collaboration with Counterparts, Stakeholders, and Other USAID-funded Partners**

Discussions will be held with the stakeholders, and, where appropriate, other USAID implementing partners, to determine areas that KEK management needs to address to improve its results in general.

**Specific Activities and Expected Outcomes**

2.1. *Activities:* Prepare KEK unbundling documents and related transfer papers.

*Outcomes:* Draft Unbundling Agreement; Draft Deed of Transfer of assets and liabilities from KEK to DistCo; Draft Collection Agreement between DistCo and GOK/MEF;

2.2. *Activities:* Prepare draft agreements between the electricity market participants.

*Outcomes:* Draft KEK/DistCo Regulated Power Sales Agreement; Draft Full Requirements Electricity Service Agreement between DistCo and new Mine/Generation Co.

2.3. *Activities:* Prepare Legal/Regulatory documentation related to the privatization transaction.

*Outcomes:* Draft DistCo Privatization Law; Draft Regulatory Statement; Draft Share Purchase Agreement between GOK/Investor; Briefing Paper on the transfer of 110 kV system to DistCo.

2.4. *Activities:* Assist KEK to prepare data for the Investor Due Diligence.

*Outcomes:* DistCo asset registers and asset ownership documentation; Index of Data Room Documentation; Report on Annual Inventory take.

### *SUBTASK 3: PROVIDE ADVISORY SUPPORT IN PRIVATIZATION PROCESS*

Under this subtask, PA will provide ongoing advisory support to KEK with regard to the full range of technical, financial and legal issues raised by the GOK and its Transaction Advisor through the tender process stages involving bidder documents, bid submission, evaluation and award and finalization of contracts and financing to close the transaction.

**Collaboration with Counterparts and other Stakeholders, and Other USAID-funded Partners**
The PA team will coordinate all their efforts under this task with all other USAID advisors.

**Specific Activities end Expected Outcomes**

3.1. *Activities:* Assist KEK with the timely preparation of responses to all technical, legal and financial issues raised during the tender process.

3.2. *Activities:* Provide active support to the Transaction Advisor during the process of bid submission, evaluation and award.

*Outcomes for 3.1 and 3.2:* Support towards successful completion of the transaction process.

## *SUBTASK 4: STRENGTHEN SKILLS AND TECHNICAL CAPACITY OF COUNTERPARTS*

Under this task, PA will organize targeted training and other suitable capacity building activities to ensure the work at DistCo contributes to strengthening the skills and technical capacity of appropriate DistCo staff and other local counterparts. PA will provide on the job as well as class room training as it deems necessary. However, PA has identified the immediate need for customer service, communication and presentation, and basic management principles training. For sustainability, PA will also identify qualified trainers and will train them to deliver training curriculum developed by PA.

**Collaboration with Counterparts, Stakeholders and Other USAID-funded Partners**
Stakeholders will be kept advised on DistCo's training needs and the training program being offered by the PA team since other donor projects may be able to contribute to the capacity building process in DisctCo.

**Specific Activities and Expected Outcomes**

4.1. *Activities:* Provide assistance and coaching to the DistCo staff on a daily basis in developing leadership skills, including communicating expectations, motivating employees, time management, meeting management, presentation skills, and planning and organization.

4.2. *Activities:* Provide day-to-day coaching on billing, managing customer accounts, and collection.

4.3. *Activities:* Conduct training on management principles, customer service and other areas as deemed necessary.

*4.4.* *Activities:* Convene round table discussions and workshops on important topics to support the privatization process.

4.5. *Activities:* Identify potential trainers and train them to deliver all training courses developed and offered by the PA team.

*Outcomes for 4.1-4.5*: Improved leadership and management skills, customer service, and internal and external communication.

## *SUBTASK 5: SUPPORT MANAGEMENT POST-PRIVATIZATION*

The PA team will continue to support DistCo for a limited time following the financial closure of the privatization transaction in order to ensure a smooth transition and maximize the chances for sustainable operation of DistCo by its new operator. The Work Plan for specific assistance in this period will be incorporated in a substantive agreement with regard to facilitation needed that will be developed by DistCo and the incoming private sector investor in the period before financial closure and will be implemented only with prior approval by COTR. Proposed work will focus on specific technical aspects of the transition for key departments (e.g. accounting and financial management, legal and regulatory affairs, human resources, billing and collection, etc.)

In addition to day-to-day legal support that KEK requires, most of the efforts in this area will focus on the regulatory needs to support DistCo's privatization. This includes activities to ensure a competent tariff filing, reform of the tariff structure to improve its transparency and attractiveness to potential investors, development and advocacy of new regulations that support proper commercial utility operations (coordinated with AEAI's regulatory advisors to the ERO, and the transaction Advisors) and promotion of a revamped social safety net to more appropriately address the needs of the vulnerable part of the population of Kosovo.

**Training**

Training will be needed to take over tariff filing and improve DistCo's relationship with the Regulator. The PA team will work with the KEK Training Group to prepare and schedule the training. The training will be conducted by a combination of KEK's own internal training system and by other USAID funded partners.

**Collaboration with Counterparts, Stakeholders, and Other USAID-funded Partners**

Discussions will be held with the stakeholders, and, where appropriate, other USAID implementing partners, to determine areas that KEK management needs to address to achieve a smooth transition to private ownership.

**Specific Activities and Expected Outcomes**

The specific objectives under this task will be finalized in discussions with the private investor, however they will most likely include the following activities:

5.1. *Activities:* Develop and assist with the implementation of a transition plan for the Finance and Accounting Function.

5.2. *Activities:* Develop and assist with the implementation of a transition plan for the Legal Function.

5.3. *Activities:* Develop and assist with the implementation of a transition plan for the Regulatory Affairs Function.

5.4. *Activities:* Develop and assist with the implementation of a transition plan for the Human Resources Function.

5.5. *Activities:* Development and assist with the implementation of a transition plan for the Billing and Collection Activities.

*Outcomes for 5.1-5.5:* Will be defined once a specific Work Plan is developed by DistCo and the incoming private sector investor

## *SUBTASK 6: PREPARE A THERMAL POWER PLANT KOSOVO B INVESTMENT REQUIREMENT AND REHABILITATION FEASIBILITY STUDY*

PA will prepare the feasibility study based on the directions of the 'Kosova e Re (KRPP)' Transaction Advisor. PA expects the technical preparation activities for this Subtask will commence in January 2010, however, the technical structure and content of the report will not be finalized before the scoping statement is approved. The study will commence upon the approval of the environmental study which will define the environmental parameters for the rehabilitation and potential expansion of TPP Kosovo B.

**Collaboration with Counterparts, Stakeholders, and Other USAID-funded Partners**
Discussions will be held with all stakeholders, and, where appropriate, other USAID implementing partners, in the process of the preparation of the feasibility study.

**Specific Activities and Expected Outcomes**

6.1. *Activities:* Prepare TPP Kosovo B Investment Requirement and Rehabilitation Feasibility Study.

*Outcomes:* Feasibility Study with sample contents as follows:

- Introduction and executive summary;
- Description of current operation and maintenance history of TPP Kosovo B, including plant condition and rehabilitation requirements, identifying potential for expansion consistent with grid stability requirements and meeting EU standards for emissions;
- Review of facility operation procedures, identifying relevant regulatory bodies and including a description of plant environmental and health and safety operations;
- Methodology and approach used to evaluate performance and costs, followed by a description of operation and maintenance (O&M) and capital costs and a review of expected performance improvements;
- Description of the characteristics of the new technology to be evaluated, including its proposed configuration and technical features, presented with a comparable level of details as in the estimates of performance and costs;
- Methodology for economic and financial analysis with a review of economic factors and assumptions employed to develop and present the results of the Cost-Benefit analyses, including relevant sensitivity analyses, and concluding with comparison of the rehabilitation and potential expansion of the Kosovo B with new technology; and,
- Recommendations and an Implementation Plan, including recommendations for rehabilitation and potential expansion, their relative ranking and costs, a presentation of the recommended project structure and its associated implementation schedules, incorporating required investment and cash flow.

### *SUBTASK 7: PREPARE TECHNICAL AND CONTRACTUAL DOCUMENTATION FOR INVESTOR DUE DILIGENCE*

Under this subtask, the PA team will provide ongoing advisory support to KEK on technical, financial and legal issues through all the stages of the tendering process including bid submission, evaluation and award. The team will also support the finalization of the contracts and financing to successfully close the privatization transaction. PA expects the draft transaction documents to be documents such as asset sale or lease agreement(s), regulatory statements, and power purchase agreement. However, this list of documents may be expanded depending on the structure of the transaction.

**Collaboration with Counterparts, Stakeholders, and Other USAID-funded Partners**

Discussions will be held with the stakeholders, and, where appropriate, other USAID implementing partners, to determine areas that KEK management needs to address to improve its results in this area.

**Specific Activities and Expected Outcomes**

7.1. *Activities:* Assist KEK and Transaction Advisors with collating documentation for the data room.

7.2. *Activities:* Provide assistance and input to the Transaction Advisors in connection with asset sale or lease agreement(s), and power purchase agreement.

7.3. *Activities:* Timely preparation of responses to all technical, legal and financial issues raised during the tender process.

*Outcomes for 7.1-7.3:* Organized and suitable data room for investors' information needs and timely response to enquiries.

## *SUBTASK 8: STRENGTHEN SKILLS AND TECHNICAL CAPACITY OF COUNTERPARTS*

This subtask will promote skills transfer as part of the implementation of Subtask 6 and 7 so that the counterparts will 'learn by doing.' Classroom based training will be provided on an as needed basis.

**Collaboration with Counterparts Stakeholders, and Other USAID-funded Partners**
Stakeholders will be kept advised on TPP Kosovo B training needs and the training program being offered by the PA team since other donor projects may be able to contribute to the capacity building process in generation.

**Specific Activities and Expected Outcomes**

8.1. *Activities:* Conduct training on the methodology to evaluate performance, characteristics of the new technology and the methodology for economic and financial analysis used in the Feasibility Study.

8.2. *Activities:* Convene round table discussions on important issues raised during investor Due Diligence (see Subtask 7) to support the TPP Kosovo B privatization process.

*Outcomes for 8.1 & 8.2:* Skills transferred as part of the implementation of Subtask 6 and 7.

## *APPENDIX A: ORGANIZATION CHART*

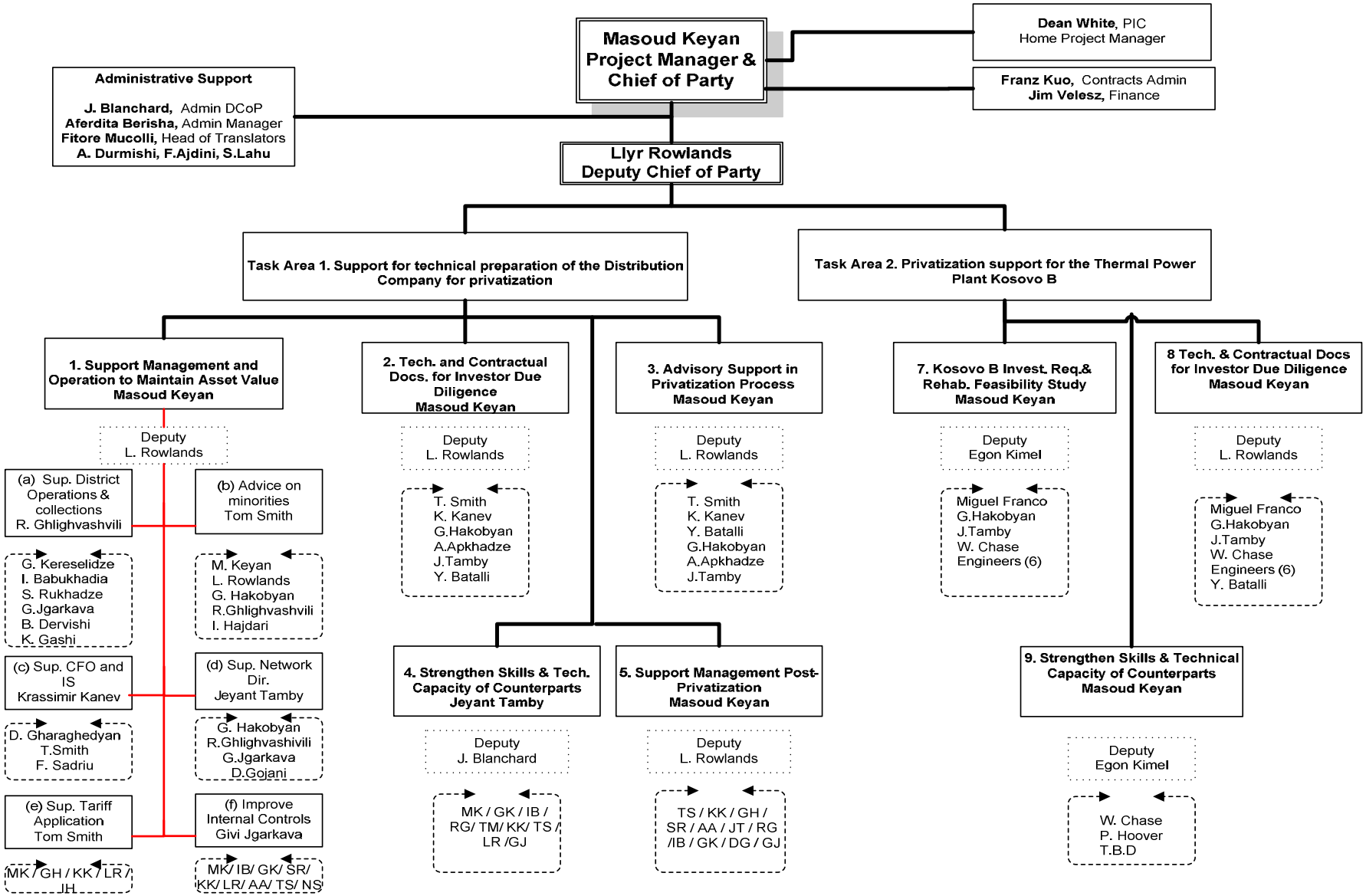

## *APPENDIX B: ACTIVITIES, OUTCOMES/RESULTS AND TIMELINES*

| Nr. | Task 1: Support Management and Operation to Preserve Assets | Completion Date (End-of-month) | Status of Major Outcomes and Results |
|---|---|---|---|
| 1.1 | Assist with the development and implementation of new internal policies and procedures. | Ongoing | - A more effective budgeting process for the development of the 2010 and 2011 budgets;<br>- Capability to preempt any new encumbrances, liens, or liabilities;<br>- Consistent application of new cost control procedures. |
| 1.2 | Support business planning and budgeting. | Ongoing | - Business Plan and Action Plans for 2010;<br>- Board approved 2010 & 2011 CAPEX and O&M budgets;<br>- Achievement of the Business Plan targets for 2010 – 2011. |
| 1.3 | Recommend improvements to billing and collection and monitor their implementation in the field on a daily basis | Ongoing | - Capability to sustain continuous improvement in billing and collection in 2010 and 2011; |
| 1.4 | Provide support to accounting and financing | Ongoing | - Un-bundled financial statements,<br>- Improved quality of accounting reflected in more favorable auditor opinions;<br>- Full compliance with the Terms and Conditions for providing banking services by Raiffeisen Bank;<br>- Full compliance with the Credit Facility Agreements concluded with GOK. |
| 1.5 | Provide assistance in legal and regulatory affairs. | Ongoing | - Quality tariff application in 2010; |
| 1.6 | Provide active support to Internal Audit and Anti-corruption. | Ongoing | - Decrease in commercial losses;<br>- Substantial reduction of waste and theft<br>- Elimination of corruption;<br>- Improvements in efficiency and effectiveness; |

| | | | |
|---|---|---|---|
| 1.7 | Provide support to other functions in KEK on an as needed basis, e.g. Network, Human Resources, Information Services, Public Relations a Communications. | Ongoing | - Improved capability of KEK (DidtCo) to manage and preserve assets; |
| 1.8 | Advise KEK top management on other management and operational issues. | Ongoing | - Visible leadership by the MD with clear performance expectations from all levels of management |
| **Nr.** | **Task 2: Prepare Technical and Contractual Documentation for Investor Due Diligence in KEK DISTCO** | **Completion Date (End-of-month)** | **Status of Major Outcomes and Results** |
| 2.1 | Prepare KEK unbundling documents and related transfer papers. | April 2010<br>April 2010<br>April 2010 | - Draft Unbundling Agreement;<br>- Draft Deed of Transfer of assets and liabilities from KEK to DistCo; Draft Collection Agreement between DistCo and GOK/MEF; |
| 2.2 | Prepare draft agreements between the electricity market participants | April 2010<br>April 2010<br>April 2010 | - Draft KEK/DistCo Regulated Power Sales Agreement;<br>- Draft Full Requirements Electricity Service Agreement between DistCo and new Mine/Generation Co. |
| 2.3 | Prepare Legal/Regulatory documentation related to the privatization transaction. | April 2010<br>April 2010<br>Per TA's request | - Draft DistCo Privatization Law;<br>- Draft Regulatory Statement;<br>- Draft Share Purchase Agreement between GOK/Investor;<br>- Briefing Paper on the transfer of the 110 kV system to DistCo. |
| 2.4 | Assist KEK to prepare data for the Investor Due Diligence. | Per TA's request | - DistCo asset registers and asset ownership documentation;<br>- Index of Data Room Documentation;<br>- Report on Annual Inventory take |

| Nr. | Task 3: Provide Advisory Support in Privatization Process | Completion Date (End-of-month) | Status of Major Outcomes and Results |
|---|---|---|---|
| 3.1 | Assist KEK with the timely preparation of responses to all technical, legal and financial issues raised during the tender process. | Per TA's request | - Support towards successful completion of the transaction process. |
| 3.2 | Provide active support to the Transaction Advisor in the bid submission, evaluation and award. | Per TA's request | |
| **Nr.** | **Task 4: Strengthen Skills and Technical Capacity of Counterparts** | **Completion Date (End-of-month)** | **Status of Major Outcomes and Results** |
| 4.1 | Provide assistance and coaching to the DistCo staff on a daily basis in developing leadership skills, including communicating expectations, motivating employees, time management, meeting management, presentation skills, and planning and organization. | December 2010 | - Improved leadership and management skills, customer service, and internal and external communication |
| 4.2 | Provide day-to-day coaching on billing, managing customer accounts, and collection. | December 2010 | |
| 4.3 | Conduct training on management principles, customer service and other areas as deemed necessary. | December 2010 | |
| 4.4 | Convene round table discussions and workshops on important topics to support the privatization process. | December 2010 | |
| 4.5 | Identify potential trainers and train them to deliver all training courses developed and offered by the PA team. | December 2010 | |

| Nr. | Task 5: Support Management Post Privatization | Completion Date (End-of-month) | Status of Major Outcomes and Results |
|---|---|---|---|
| 5.1 | Develop and assist with the implementation of a transition plan for the Finance and Accounting Function. | One month after closing the privatization transaction. | - Will be defined once a specific Work Plan is developed by DistCo and the incoming private sector investor |
| 5.2 | Develop and assist with the implementation of a transition plan for the Legal Function. | One month after closing the privatization transaction. | |
| 5.3 | Develop and assist with the implementation of a transition plan for the Regulatory Affairs Function. | One month after closing the privatization transaction. | |
| 5.4 | Develop and assist with the implementation of a transition plan for the Human Resources Function. | One month after closing the privatization transaction. | |
| 5.5 | Development and assist with the implementation of a transition plan for the Billing and Collection Activities. | One month after closing the privatization transaction. | |
| **Nr.** | **Task 6: Prepare a Thermal Power Plant Kosovo B Investment Requirement and Rehabilitation Feasibility Study** | **Completion Date (End-of-month)** | **Status of Major Outcomes and Results** |
| 6.1 | Prepare a Thermal Power Plant Kosovo B Investment Requirement and Rehabilitation Feasibility Study | Four months after obtaining COTR agreed upon directions from Transaction Advisor and BEO-approved scoping statement | - Feasibility Study and Report for investors' information |

| Nr. | Task 7: Prepare Technical and Contractual Documentation for Investor Due Diligence | Completion Date (End-of-month) | Major Outcomes and Results |
|---|---|---|---|
| 7.1 | Assist KEK and Transaction Advisors with collating documentation for the data room. | Upon request | - Organized and suitable data room for investors' information needs and timely response to enquiries. |
| 7.2 | Provide assistance and input to the Transaction Advisors in connection with asset sale or lease agreement(s), and power purchase agreement. | Upon request | |
| 7.3 | Timely preparation of responses to all technical, legal and financial issues raised during the tender process. | Upon request | |
| **Nr.** | **Task 8: Strengthen Skills and Technical Capacity of Counterparts** | **Completion Date (End-of-month)** | **Status of Major Outcomes and Results** |
| 8.1 | Conduct training on the methodology to evaluate performance, characteristics of the new technology and the methodology for economic and financial analysis used in the Feasibility Study | Three months following the completion of the Feasibility Study | - Skills transferred as part of the implementation of Subtasks 6 and 7. |
| 8.2 | Convene round table discussions on important raised during investor Due Diligence (see Subtask 7) to support the TPP Kosovo B privatization process. | Three months following the completion of the Feasibility Study | |

## *APPENDIX C: PERFORMANCE BASED MANAGEMENT SYSTEM*

### 1. Key Indicators (Reported Quarterly)

| No. | Objectives Supporting These Results | Definition of Indicator and Unit of Measure | 2006 Actual/ Calculation | 2007 Actual | 2008 Actual | 2009 Targets | 2009 Actual | 2010 Targets | 2011 Targets |
|---|---|---|---|---|---|---|---|---|---|
| 1. | 1,2,3 | Commercial losses (ratio of commercial losses vs. energy available for sale) | 31% | 30% | 20% | 10% | 21% | 15% | 12% |
| 2. | 1,2,3 | Technical losses (ratio of technical loss vs. energy delivered to distribution) | 18.2% | 17.4% | 16.6% | 16.5% | 17.7% | 16.4% | 16.3% |
| 3. | 1,2,3 | Ratio of energy billed vs. energy available for sale | 69.1% | 69.9% | 79.8% | 90.0% | 79.3% | 85% | 88% |
| 4. | 1,2,3 | Ratio of revenue collected vs. billed | 74.2% | 76.6% | 75.6% | 89.0% | 81.4% | 86% | 90% |
| 5. | 1,2,3 | Revenue collected as a percentage of value of energy available for sale [Ratio of revenue collected vs. billed] X [Ratio of energy billed vs. energy available for sale] | 51.3% | 53.5% | 60.3% | 80.0% | 64.5% | 73% | 79% |
| 6. | 1,2,3 | Collected revenue in Euros | €96mm | €110.8mm | €135mm | €140mm | €160 mm | €155 mm | €160mm |

***Notes:***

1. *The 2009 targets were initially set in the 2008-2009 Work Plan. The 2010 and 2011 targets in this work plan are based on the 2009 Actual performance. The major reason for the gap between the 2009 Targets and Actual is the lack of full GOK support for the implementation of the PA team's recommendations. The full explanation of underlying reasons for KEK's performance is provided in the 2009 progress reports.*
2. *The reason for the 2009 deterioration in the first three indicators (compared to 2008 Actual) is the reintegration of Minorities (i.e. including their consumption as part of energy available for sale). Despite the "revision" the trend of continuous improvement in all Key Indicators has been preserved and the values on the indicators on plans' horizon compare favorably with the regional utility performance benchmarks.*
3. *The decrease in the Collected Revenue Target in 2010 is due to exclusion of the RTK cash flow with the expiration of the RTK contract (€10 million in 2009).*
4. *Source of the actual data for items 1-4 of the above is the Monthly Report to the KEK Board of Directors.*

## 2. Milestone Indicators (Reported Quarterly)

| # | Subtask | Milestone Indicators | Timeline/Status |
|---|---|---|---|
| 1 | Support Management and Operation to Maintain Asset Value | ▪ 2010 Business Plan approved by the BOD<br>▪ 2010 Budget approved by the BOD<br>▪ Tariff filing for 2010<br>▪ Performance against the Budget<br>▪ Draft Audited financial statements;<br>▪ Billing and collection Reports to the BOD<br>▪ Unbundled Financial Statements<br>▪ Credit Facility Agreements<br>▪ Internal Audit Summary Report | January 2010<br>January 2010<br>February 2010<br>Quarterly<br>June 2010<br>Quarterly<br>Annually<br>March 2010<br>Quarterly |
| 2 | Prepare Technical and Contractual Documentation for Investor Due Diligence in DistCo | ▪ Draft Legal Unbundling Agreement<br>▪ Draft KEK/DistCo (KEDS Regulated Power Sales Agreement<br>▪ Draft KEK/DistCo, Deed Transferring assets & liabilities from KEK to DistCo,<br>▪ Briefing Paper - transfer of 110kV system to DistCo/KEK,<br>▪ Draft Full Requirements Electricity Service Agreement between DistCo and New Mine/Generation Co.<br>▪ Draft Regulatory Statement<br>▪ Draft Collection Agreement between DistCo and GoK/MEF<br>▪ Draft DistCo Privatization Law<br>▪ Draft Share Purchase Agreement between GoK/Investor<br>▪ Draft Index of data room documentation.<br>▪ Create DistCo asset registers and compile asset ownership documentation | April 2010<br>April 2010<br>April 2010<br>April 2010<br>April 2010<br>April 2010<br>April 2010<br>April 2010<br>April 2010<br>Per TA's request<br>Per TA's request |
| 3 | Provide Advisory Support in DistCo Privatization Process | ▪ Timely preparation of responses to all technical, legal and financial issues raised during the tender process. | As needed per TA's request |
| 4 | Strengthen Skills and Technical Capacity of Counterparts | Per Training Indicators | On going |
| 5 | Support Management Post- | ▪ Producing transition plan for the Finance and Accounting Function. | One month after |

| | | | |
|---|---|---|---|
| | DistCo Privatization | ▪ Producing transition plan for the Legal Function.<br>▪ Producing transition plan for the Regulatory Affairs Function.<br>▪ Producing transition plan for the Human Resources Function.<br>▪ Producing transition plan for the Billing and Collection Activities. | closing the privatization transaction. (This may be varied depending on the needs and requirements of the investor) |
| 6 | Prepare a Thermal Power Plant Kosovo B Investment Requirement and Rehabilitation Feasibility Study | Feasibility Study Report including technical and financial feasibility for rehabilitation and potential efficiency improvement of Power Plant B, investment requirement, recommendation, and implementation schedule | Four months after obtaining COTR agreed upon directions from Transaction Advisor and BEO-approved scoping statement |
| 7 | Prepare Technical and Contractual Documentation for Investor Due Diligence | ▪ Timely preparation of responses to all technical, legal and financial issues raised during the tender process. | As needed per the Transaction Advisor's request |
| 8 | Strengthen Skills and Technical Capacity of Counterparts | Per training indicators | Quarterly |

### 3. Training Indicators (Reported Quarterly)

| No. | Task Order Objective Reference | Definition of Indicator & Unit of Measure | 2009 Actual | 2010 Target | 2011 Target | Status |
|---|---|---|---|---|---|---|
| 1. | 1,2 &3 | Number of people received training in technical energy field | ***Actual 36***<br><br>M=32 and W=4 | ***Target 40***<br><br>(M=35 and W=5) | ***Target 40***<br><br>(M=35 and W=5) | |
| 2. | 1,2 &3 | Number of people received training in energy related business management field | ***Actual 261***<br><br>(M = 196 and W =65) | ***Target 200***<br><br>(M=150 and W=50) | ***Target 200***<br><br>(M=150 and W=50) | |

| Dept. | Men | Women | Total |
|---|---|---|---|
| Supply | | | |
| Network | | | |
| Distribution | | | |
| IT/IS | | | |
| Int. Audit | | | |
| **Total** | | | |

| Dept. | Men | Women | Total |
|---|---|---|---|
| Fin/ Acct | | | |
| Hum Res | | | |
| Legal | | | |
| Regulatory | | | |
| Board of Directors | | | |
| **Total** | | | |

## 4. Contextual Indicator (Reported Quarterly)

| No. | Task Order Objective Reference | Definition of Indicator & Unit of Measure | 2009 Actual/ Calculation | 2010 Target | 2011 Target | Status |
|---|---|---|---|---|---|---|
| 1. | 1,2 &3 | % of un-served demand [1] | ***6.86%*** | 6% | 5% | |

Note: This Indicator is used as a proxy for the Indicator "Time without Electricity" since no mechanism or data is available to determine Time without Electricity. Furthermore, unserved demand is a major factor (about 80%) to the Time without Electricity.
The Fiscal Year (FY) runs from 1 October of one year to 30 September of the following year; Q4 is the fourth quarter (October through December) of the calendar year.

[1] The percentage of un-served load will be calculated based on the formula $\frac{R}{C + R}$

Where R is the load shedding ("un-served energy") in MW and C is the served demand in MW based upon data provided by the KEK Capacity Management Department.

USAID | KOSOVO

NGA POPULLI AMERIKAN
OD AMERIČKOG NARODA

# PERFORMANCE BASED MANAGEMENT SYSTEM 2010

## USAID KORPORATA ENERGJETIKE E KOSOVES (KEK) NETWORK AND SUPPLY PROJECT

CONTRACT NUMBER EPP-I-04-03-00008-00

February 2010

**FINAL**

This publication was produced for review by the United States Agency for International Development. It was prepared by PA Government Services Inc.

# Performance Based Management System 2010

USAID KORPORATA ENERGJETIKE E KOSOVES (KEK) NETWORK AND SUPPLY PROJECT

Contract Number EPP-I-04-03-00008-00

February 2010

**USAID**

Mr. Arben Nagavci
Cognizant Technical Officer
USAID/Kosovo
Prishtina, Kosovo

**PA Government Services Inc.**

Masoud Keyan
PA Government Services, Inc.
4601 North Fairfax Drive, Suite 600
Arlington, VA 22203
Tel: +1 571 227-9000
www.paconsulting.com

# TABLE OF CONTENTS


**1. INTRODUCTION ..... 1**

**2. SUMMARY OF PERFORMANCE INDICATORS ..... 4**

**3. PIRS FOR CONTEXTUAL INDICATORS ..... 10**

3.1 PERCENTAGE OF UN-SERVED DEMAND ..... 10

**4. PIRS FOR KEY INDICATORS ..... 13**

4.1 LEVEL OF COMMERCIAL LOSSES ..... 13
4.2 LEVEL OF TECHNICAL LOSSES ..... 16
4.3 RATIO OF ENERGY BILLED VERSUS ENERGY AVAILABLE FOR SALE ..... 19
4.4 RATIO OF REVENUE COLLECTED VERSUS REVENUE BILLED ..... 22
4.5 REVENUE COLLECTED AS A PERCENTAGE OF THE VALUE OF ENERGY AVAILABLE FOR SALE ..... 25
4.6 REVENUE COLLECTED ..... 28

**5. TRAINING INDICATORS ..... 30**

5.1 NUMBER OF PEOPLE WHO RECEIVED TRAINING IN TECHNICAL ENERGY FIELD ..... 30
5.2 NUMBER OF PEOPLE WHO RECEIVED TRAINING IN ENERGY RELATED BUSINESS MANAGEMENT FIELD ..... 32

**6. DATA QUALITY ASSESSMENTS (DQAS) ..... 34**

6.1 DQA FOR PERCENTAGE OF UN-SERVED LOAD ..... 34
6.2 DQA FOR LEVEL OF COMMERCIAL LOSSES ..... 37
6.3 DQAFOR LEVEL OF TECHNICAL LOSSES ..... 40
6.4 DQA FOR THE RATIO OF ENERGY BILLED VERSUS ENERGY AVAILABLE FOR SALE ..... 43
6.5 DQA FOR THE RATIO OF REVENUE COLLECTED VERSUS REVENUE BILLED ..... 46
6.6 DQA FOR REVENUE COLLECTED AS A PERCENTAGE OF THE VALUE OF ENERGY AVAILABLE FOR SALE ..... 49
6.7 DQA FOR REVENUE COLLECTED IN EUROS ..... 52
6.8 DQA FOR NUMBER OF PEOPLE WHO RECEIVED TRAINING IN TECHNICAL ENERGY FIELD ..... 55
6.9 DQA FOR NUMBER OF PEOPLE WHO RECEIVED TRAINING IN ENERGY RELATED BUSINESS MANAGEMENT FIELD ..... 58

APPENDIX A: Un-Served Demand Report ..... A-1
APPENDIX B: Energy Accounting Report ..... B-1
APPENDIX C: Training Report ..... C-1

# 1. INTRODUCTION

This document has been prepared under the Korporata Energjetike e Kosoves (KEK) Network and Supply Project implemented by PA Government Services Inc and funded by the US Agency for International Development (USAID) under Contract Number EPP-I-04-03-00008-00. The document presents the Performance-Based Management System (PBMS) for monitoring the performance and impact of the activities included in the 2010 Work Plan. It is based on a pyramid concept (see Fig. 1 below) and includes the following groups of indicators:

1. Contextual Indicators (CI)
2. Key Indicators (KI)
3. Milestone Indicators (MI)
4. Training Indicators (TI)

All indicators are summarized in tables in Section 2.

The link between the activities in work plan and the indicators in the Performance Based Management System is illustrated in the following relationship:

**Inputs (= Activities (e.g., under sub-tasks)) including timelines => Outcomes (= Targets/**

**Accomplishments)/Results => Indicators**

The contextual indicator is designed to measure the impact of all activities in the work plan on the people and economy of Kosovo

The top level key indicator “Revenue collected as a percentage of value of energy available for sale” provides a measure for the overall performance.

Medium- and base-level key indicators are then used to analyze the different aspects of the overall performance following a break-down scheme similar to the DuPont Chart. The top level key indicator is presented as the product of two medium level key indicators. This means that an improvement in the overall performance, measured by the indicator “Revenue collected as a percentage of value of energy available for sale” (sales and revenue) can be achieved by improving the performance in the area measured by indicator “Ratio of energy billed vs. energy available for sale” (billing) or the area measured by the indicator “Ratio of revenue collected vs. billed” (collection), or in both of these areas. It must also be noted that a significant improvement in one of these areas can compensate for weaker performance in the other area. The medium level key indicators are further presented as ratios (or products) of other lower level indicators or factors that are calculated as algebraic products that include lower level indicators. Thus in order to improve the performance in the area measured by key indicator “Ratio of revenue collected vs. billed” the contractor must improve the performance in the area measured by key indicator “Revenue collected”. Similarly improvement in the area measured by key indicator “Ratio of energy billed vs. energy available for sale” can be achieved by improvements in the areas measured by the indicators “Level of Technical Losses” and “Level of Commercial Losses”. The relationship between the KI’s and the way they shall be used in performance analysis is presented in Fig. 2.

Milestone indicators are used to further analyze and measure the performance in all major sub-areas of the areas measured by the base level KI’s. As the activities in these sub-areas are

the subject of a detailed work plan it is most appropriate to use the deliverables, associated with each of the activities as milestone indicators in the PBMS.

The sustainability of the performance improvement is obviously dependant on the success knowledge transfer and capacity building. The training indicators in PBMS are used to trace the scale of knowledge transfer of and provide a measure for the extent of capacity building.They measure the outcome of training, which as a cross-cutting activity is included under each subtask and separately is the focus of two of the subtasks in the Work Plan.

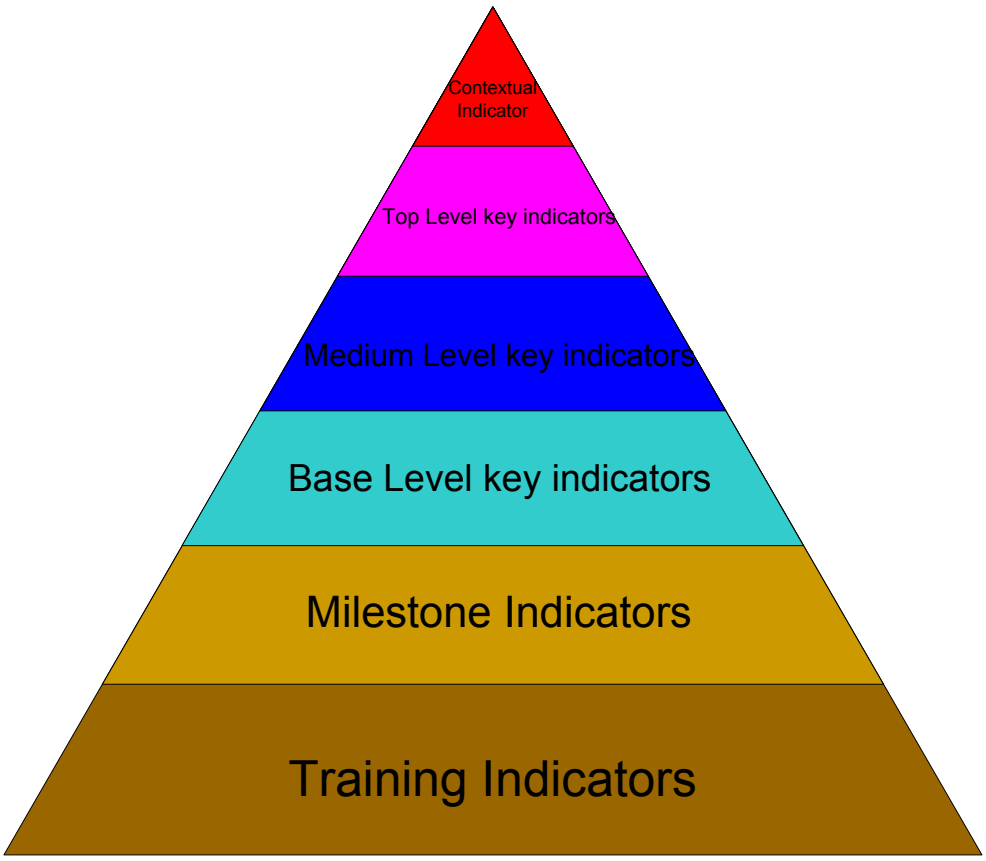


Fig. 1 PBMS Pyramid

**Legend**

| | |
|---|---|
| **Contextual Indicators:** | Percentage of un-served demand (load) |
| **Top level key indicators:** | Revenue collected as a percentage of value of energy available for sale |
| **Medium level key indicators:** | Ratio of revenue collected vs. revenue billed; Ratio of energy billed vs. energy available for sale |
| **Base level key indicators:** | Level of commercial losses; Level of technical losses; Revenue billed in Euros |
| **Milestone indicators**: | See table in section 2.2 |
| **Training indicators:** | Number of people received training in technical energy field; Number of people received training in energy related business management field |

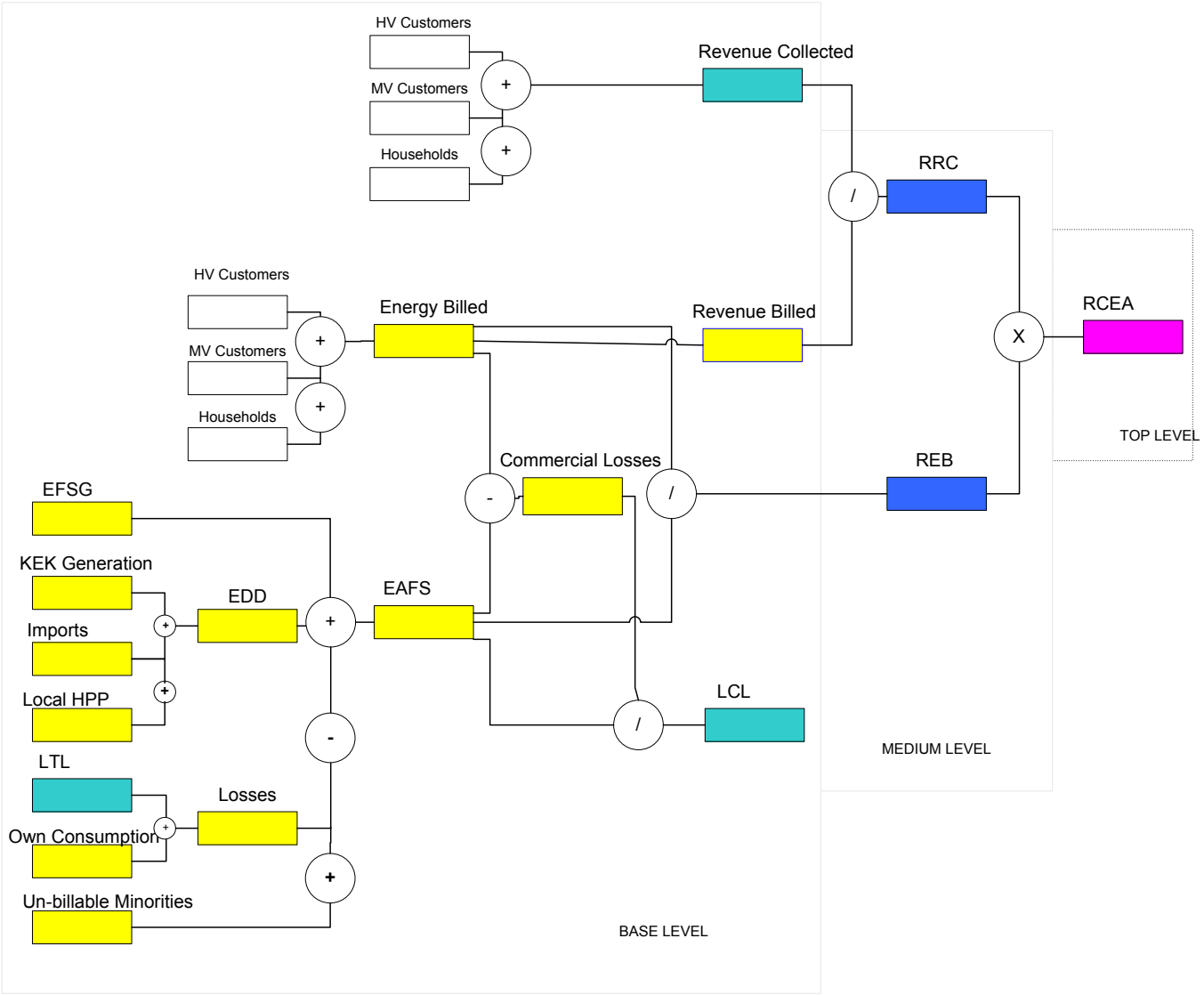


Fig 2. PBMS DuPont Type Diagram

**Legend**

- RCEA - Revenue collected as a percentage of value of energy available for sale
- RRC - Ratio of revenue collected vs. billed
- REB - Ratio of energy billed vs. energy available for sale
- EAFS – Energy available for sale
- LCL – Level of commercial losses
- LTL – Level of technical losses
- EDD – energy delivered to distribution
- EFSG – Energy sold to large industrial customers 110 KV
- Local HPP – small hydro wind and other renewable power plants

## 2. SUMMARY OF PERFORMANCE INDICATORS

### 1. Key Indicators (Reported Quarterly)

| No. | Objectives Supporting These Results | Definition of Indicator and Unit of Measure | 2006 Actual/ Calculation | 2007 Actual | 2008 Actual | 2009 Targets | 2009 Actual | 2010 Targets | 2011 Targets |
|---|---|---|---|---|---|---|---|---|---|
| 1. | 1,2,3 | Level of Commercial Losses (ratio of commercial losses vs. energy available for sale) | 31% | 30% | 20% | 10% | 21% | 15% | 12% |
| 2. | 1,2,3 | Level of Technical Losses (ratio of technical loss vs. energy delivered to distribution) | 18.2% | 17.4% | 16.6% | 16.5% | 17.7% | 16.4% | 16.3% |
| 3. | 1,2,3 | Ratio of Energy Billed vs. Energy Available for Sale | 69.1% | 69.9% | 79.8% | 90.0% | 79.3% | 85% | 88% |
| 4. | 1,2,3 | Ratio of Revenue Collected vs. Billed | 74.2% | 76.6% | 75.6% | 89.0% | 81.4% | 86% | 90% |
| 5. | 1,2,3 | Revenue Collected as a percentage of Value of Energy Available for Sale [Ratio of revenue collected vs. billed] X [Ratio of energy billed vs. energy available for sale] | 51.3% | 53.5% | 60.3% | 80.0% | 64.5% | 73% | 79% |
| | 1,2,3 | Revenue Collected in Euros | €96mm | €110.8mm | €135mm | €140mm | €160 mm | €155 mm | €160mm |

***Notes:***

1. *The 2009 targets were initially set in the 2008-2009 Work Plan. The 2010 and 2011 targets in this work plan are developed base on the 2009 Actual. The major reason for the gap between the 2009 Targets and Actual is the lack of full GOK support for the implementation of the PA team's recommendations.. The full explanation of underlying reasons for KEK's performance is provided in the 2009 progress reports.*
2. *The reason for the 2009 deterioration in the first three indicators (compared to 2008 Actual) is the reintegration of Minorities (i.e. including the cse Despite the "revision" the trend of continuous improvement in all Key Indicators has been preserved and the values on the indicators at the horizon of the plan compare favorably to the regional utility per4formance benchmarks.*
3. *The decrease in the Collected Revenue Target in 2011 is the exclusion of the RTK cash flow with the expiration of the RTK contract.*
4. *Source of the actual data for items 1-4 of the above is the Monthly Report to the KEK Board of Directors.*

## 2. Milestone Indicators (Reported Quarterly)

| # | Subtask | Deliverables | Timeline |
|---|---|---|---|
| 1 | Support Management and Operation to Maintain Asset Value | ▪ 2010 Business Plan approved by the BOD<br>▪ 2010 Budget 2010 approved by the BOD<br>▪ Tariff filing<br>▪ Performance against the Budget<br>▪ Draft Audited financial statements;<br>▪ Billing and collection Reports to the BOD<br>▪ Unbundled Financial Statements<br>▪ Credit Facility Agreements<br>▪ Internal Audit Summary Report<br>▪ etc<br>▪ etc<br>▪ etc | January 2010<br>January 2010<br>February 2010<br>Quarterly<br>June 2010<br>Quarterly<br>Annually<br>March 2010<br>Quarterly |
| 2 | Prepare Technical and Contractual Documentation for Investor Due Diligence in DistCo | ▪ Draft Legal Unbundling Agreement<br>▪ Draft KEK/DistCo (KEDS Regulated Power Sales Agreement<br>▪ Draft KEK/DistCo, Deed Transferring assets & liabilities from KEK to DistCo,<br>▪ Briefing Paper - transfer of 110kV system to DistCo/KEK,<br>▪ Draft Full Requirements Electricity Service Agreement between DistCo and New Mine/Generation Co.<br>▪ Draft Regulatory Statement<br>▪ Draft Collection Agreement between DistCo and GoK/MEF<br>▪ Draft DistCo Privatization Law<br>▪ Draft Share Purchase Agreement between GoK/Investor | April 2010<br>April 2010<br>April 2010<br>April 2010<br>April 2010<br>April 2010<br>April 2010<br>April 2010<br>April 2010 |

| | | | |
|---|---|---|---|
| | | ▪ Draft Index of data room documentation.<br>▪ Create DistCo asset registers and compile asset ownership documentation | Per TA's request<br>Per TA's request |
| 3 | Provide Advisory Support in DistCo Privatization Process | ▪ Timely preparation of responses to all technical, legal and financial issues raised during the tender process. | As needed per TA's request |
| 4 | Strengthen Skills and Technical Capacity of Counterparts | Per Training Indicators | On going |
| 5 | Support Management Post-DistCo Privatization | ▪ Producing transition plan for the Finance and Accounting Function.<br>▪ Producing transition plan for the Legal Function.<br>▪ Producing transition plan for the Regulatory Affairs Function.<br>▪ Producing transition plan for the Human Resources Function.<br>▪ Producing transition plan for the Billing and Collection Activities. | One month after closing the privatization transaction. (This may be varied depending on the needs and requirements of the investor) |
| 6 | Prepare a Thermal Power Plant Kosovo B Investment Requirement and Rehabilitation Feasibility Study | **Work plan** | January 31, 2010 |
| | | Feasibility Study Report including technical and financial feasibility for rehabilitation and potential efficiency improvement of Power Plant B, investment requirement, recommendation, and implementation schedule | Four months after obtaining COTR agreed upon directions from Transaction Advisor and BEO-approved scoping statement |
| 7 | Prepare Technical and Contractual Documentation for Investor Due Diligence | ▪ Timely preparation of responses to all technical, legal and financial issues raised during the tender process. | As needed per the Transaction Advisor's request |
| 8 | Strengthen Skills and Technical | Per training indicators | Annually |

*2. Summary of Performance Indicators…*

| | | | |
|---|---|---|---|
| | Capacity of Counterparts | | |
| | Program Management | Quarterly Reports | Within 30 days after the end of calendar quarter |
| | | Branding Implementation Plan and Marking Plan | Within 30 days of Task Order Modification Signature |
| | | Annual Report 2009 | February 15, 2010 |
| | | Annual Report 2010 | February 15, 2011 |
| | | Final Task Order Report | Draft one month prior to the end of the period of performance, with the final issued within three weeks of comments being received from USAID. |

### 3. Training Indicators (Reported Quarterly)

| No. | Task Order Objective Reference | Definition of Indicator & Unit of Measure | 2009 Actual | 2010 Target | 2011 Target | Status |
|---|---|---|---|---|---|---|
| 1. | 1,2 &3 | Number of people received training in technical energy field | ***Actual 36***<br><br>M=32 and W=4 | ***Target 40***<br><br>(M=35 and W=5) | ***Target 40***<br><br>(M=35 and W=5) | |
| 2. | 1,2 &3 | Number of people received training in energy related business management field | ***Actual 261***<br><br>(M = 196 and W =65) | ***Target 40***<br><br>(M=150 and W=50) | ***Target 40***<br><br>(M=150 and W=50) | |

### 4. Contextual Indicators (Reported Quarterly)

| No. | Task Order Objective Reference | Definition of Indicator & Unit of Measure | 2009 Actual/ Calculation | 2010 Target | 2011 Target | Status |
|---|---|---|---|---|---|---|
| 1. | 1,2 &3 | Percentage of un-served demand (load)[1] | ***6.86%*** | 6% | 5% | |

Note: This Indicator is used as a proxy for the Indicator "Time without Electricity" since no mechanism or data is available to determine Time without Electricity. Furthermore, un-served demand is a major factor (about 80%) to the Time without Electricity. The Fiscal Year (FY) runs from 1 October of one year to 30 September of the following year; Q4 is the fourth quarter (October through December) of the calendar year.

[1] The percentage of un-served demand (load) will be calculated based on the formula $\frac{R}{C + R}$

where R is the un-served demand ("load shedding"") in MW and C is the served demand in MW based upon data provided by the KEK Capacity Management Department.

## 3. PIRS FOR CONTEXTUAL INDICATORS

### 3.1 PERCENTAGE OF UN-SERVED DEMAND

**Performance Indicator Reference Sheet**

**Objective #:** 1, 2 and 3. (Support for technical preparation of the Distribution Company for privatization; Assistance with post-privatization implementation for the Distribution Company; Privatization support for the Thermal Power Plant Kosovo B.)

**Subtask #:** 1 - 8

I**ndicator** #: Percentage of Un-served Demand (PUD)

**DESCRIPTION**

**Precise Definitions:** The percentage of un-served demand is the ratio of the un-served demand (load) versus the sum of the served load (gross system consumption) and the un-served demand , all measured in MWH at the end of a period:

$$PUD = \frac{UD}{SD + UD} \quad [\%]$$

UD – Un-served Demand (Load Shedding)

SD – Served Demand (Gross Consumption)

This indicator is used as a "proxy" for the indicator "time without energy". A decrease in the percentage of un-served load indicates improvement in the efficiency and effectiveness of commercial operation of KEK.

**Unit of Measure:** Percentage

**Disaggregated By**: N/A (data is presented for overall KEK performance)

**Justification/Management Utility:** The percentage of un-served demand (load) is an important measure of the quality of electrical services KEK provides to its consumers and provides an estimate for the room for improvement of customer supply. Since this USAID project supports KEK, this indicator is also a measure of the effectiveness of the support for the preparation of the Distribution Company for privatization and is a measure of the level of achievement of Objective 1 of the project.

**PLAN FOR DATA ACQUISITION BY USAID**

**Data collection Methodology:** The Capacity Planning Department of KEK keeps records of the data used in the calculation of this indicator. PA developed the reporting methodology and defined the format of the Un-served Demand Report. The Un-served Demand reports are kept in PA Project Archive. The data from the Un-served Demand Report used to calculate the value of this indicator is referenced below:

- SD - Table 3, Row: Served Demand; Column: 3
- UD - Table 3, Row: Un-served Demand; Column: 3
- PUD – Table 3 Row: Quarterly PUD; Column 3

**Data Source:** The Un-served Demand Report. A copy of the report is provided in Appendix A

| |
|---|
| **Method of Acquisition by PA:** The data is taken from the archive of the Capacity Planning Department. PA calculates the percentage of un-served load, prepares the Un-Served Load Report on a monthly basis, and submits it with the Quarterly Report to USAID. |
| **Frequency and Timing of Data Acquisition:** PA reports to USAID Quarterly |
| **Individual (s) responsible at USAID:** Arben Nagavci |
| **Individual responsible for providing data to USAID:** Masoud Keyan |
| **Location of data Storage**: PA KEK Project Archive |
| **DATA QUALITY ISSUES** |
| **Date of Initial Data Quality Assessment**: February 2010 |
| **Known data Limitations and Significance (if any):** Official data from KEK have historically been of relatively low quality due to the following limitations; lack of meters and low quality of existing meters, incoherent meter reading and meter recording process, inadequate data storage and processing and inconsistent reporting. Following the implementation of the recommendations of the USAID advisors described in the next section the data quality has improved substantially. |
| **Actions taken or Planned to Address data limitations:** Initial meter reading data (used in the calculation of this indicator) is provided by KEK. PA advisors developed a methodology for accounting and verification of un-served energy data and supervised the installation of check meters. They also prepared a program for further improvement of data quality which includes the installation of new meters, improvements to the information systems and technology, further strengthening of internal audit and creating of field enforcement units. Although these measures have resulted in cleaning the data and improving data verifiability, comparability and consistency PA cannot guarantee that initial data provided by KEK is a 100% accurate. |
| **Date of Future Data Quality Assessments**: February 2011 |
| **Procedures for Future Data Quality Assessments**: Review of data systems. |
| **PLAN FOR DATA ANALYSIS, REVIEW & REPORTING** |
| **Data Analysis**: Analyzed in Quarterly Reports |
| **Presentation of Data**: In Quarterly Reports |
| **Review of Data**: By USAID in Quarterly Reports |
| **Reporting of Data**: In Quarterly Reports |
| **OTHER NOTES** |
| **Note on Baseline/Targets:** Due to the poor quality of the available 2006 data some of the quantities used in the calculation of this indicator for the base line year had to be estimated. Upon further review, the 2006 data had to be further revised. The updated numbers are shown in the status section for the two items in bold. |
| **Other Notes**: None |

*3. PIRS for Contextual Indicators…*

| INDICATOR VALUES | | | |
|---|---|---|---|
| Year | Target | Actual | Notes |
| 2006 BASELINE YEAR | - | 12.92% | |
| 2007 | 11.00% | 11.02% | |
| 2008 | 10.00% | 12.84% | The reason for the increase is the commissioning of the two furnaces of Feronikeli. In order to serve this load KEK had to load shed other customers. |
| 2009 | 11.00% | 6.86% | |
| 2010 | 10.72% | - | |
| 2011 | 10.44% | - | |
| **THIS SHEET UPDATED ON:** | | | |

# 4. PIRS FOR KEY INDICATORS

## 4.1 LEVEL OF COMMERCIAL LOSSES

### Performance Indicator Reference Sheet

**Objective #:** 1, 2 and 3. (Support for technical preparation of the Distribution Company for privatization; Assistance with post-privatization implementation for the Distribution Company; Privatization support for the Thermal Power Plant Kosovo B.)

**Subtask #:** 1 - 8

**Indicator #:** Level of commercial losses (LCL)

**DESCRIPTION**

**Precise Definitions:** The Level of Commercial Losses (LCL) is defined as the ratio of commercial losses to energy available for sale for a given period of time presented as a percentage. Commercial losses are herein defined as the difference between the Energy Available for Sale (EAFS) and the Energy Billed (EB) in MWh. EAFS is the energy delivered from the transmission network to the distribution network (EDD) (as jointly metered by KEK and KOSTT), plus energy delivered to direct customers (EDC), less the calculated technical losses (TL), less KEK's own consumption (OC), less un-billable minorities (UB), plus the energy supplied at distribution voltage by small generators [hydro and wind power] ( EFSG), measured in MWh. Energy Billed (EB) is the total consumption of electricity in MWh by all customers of KEK measured by the meters and reflected in the bills of the customers for the period.

$$LCL = \frac{CL}{EAFS} = \frac{(EDD + EFSG+EDC) – TL – OC - UB - EB}{(EDD+EFSG+EDC) – TL – OC – UB} \quad [\%]$$

A decrease in the level of commercial losses indicates improvement in the efficiency and effectiveness of commercial operation of KEK.

**Unit of Measure**: Percentage

**Disaggregated By**: N/A (data is presented for overall KEK performance)

**Justification/Management Utility**:

The level of commercial losses indicator is used by KEK to measure the efficiency of its accounting for the energy in KEK Network and the success if its efforts to fight electricity theft and corruption. It is an important gauge for the commercial viability of KEK. Since this USAID project supports KEK, this indicator is also a measure of the effectiveness of the support for the preparation of the Distribution Company for privatization and indicates the level of achievement of Objective 1 of the project.

**PLAN FOR DATA ACQUISITION BY USAID**

**Data collection Methodology**: The Strategic Planning Department of KEK's Finance Division produces the Energy Accounting Report, and submits it to the BOD (through the Corporate Secretary) on a monthly basis. PA assisted KEK in developing the reporting methodology and defining the format of the report. PA Advisors review the report each month. The data for the report is provided to the Strategic Planning Department by KEK Supply Division (Energy Billed, KEK Own Consumption, Un-billable Minorities) and Network Division (Technical Losses, Energy Delivered to Distribution, Energy supplied by small generators, energy to direct customers). All data with the exception of Technical Losses is based on meter readings that are recorded and kept in special archives (electronic and paper). The Technical Losses are calculated by the Planning and Loss Analysis Department of the Network Division with the use of computer models. The technical loss calculations and the meter readings are then used to produce the Energy Accounting Report, which is the

source of data for the calculation of this indicator.

The data from the Energy Accounting Report used to calculate the value of this indicator is referenced below:

- EDD+EFSG+EDC - Appendix B, Page B-3, Table Results by district, Column: Input to Distribution, Row: Total
- TL - Appendix B, Page B-3, Table Results by district, Column: Technical Losses, Row: Total
- OC - Appendix B, Page B-3, Table Results by district, Column: Internal Cons., Row: Total
- UB - Appendix B, Page B-3, Table Results by district, Column: Minorities, Un-billable &Uncollectible, Row: Total
- EB - Appendix B, Page B-3, Table Results by district, Column: Energy Billed [MWh], Row: Total

**Data Source**: Energy Accounting Report, the Board of Directors Archive, Strategic Planning Department Archive. A copy of the Energy Accounting Report is provided in Appendix B.

**Method of Acquisition by PA**: The data is taken from KEK's Board of Directors archive. PA assists KEK staff in generating the monthly Energy Accounting Report which is submitted to the BOD.

**Frequency and Timing of Data Acquisition:** KEK produces data monthly and PA reports to USAID Quarterly

**Individual (s) responsible at USAID:** Arben Nagavci

**Individual responsible for providing data to USAID:** Masoud Keyan

**Location of data Storage:** KEK BOD Archive maintained by the BOD Secretary

**DATA QUALITY ISSUES**

**Date of Initial Data Quality Assessment**: February 2010

**Known data Limitations and Significance (if any):** Official data from KEK have historically been of relatively low quality due to the following limitations; lack of meters and low quality of existing meters, incoherent meter reading and meter recording process, inadequate data storage and processing and inconsistent reporting.

Following the implementation of the recommendations of the USAID advisors described in the next section the data quality has improved substantially.

**Actions taken or Planned to Address data limitations**: Initial meter reading data (used in the calculation of commercial losses) is provided by KEK.. USAID advisors developed a methodology for verification of the energy balance (thus checking the compatibility of meter readings), supervised the installation of check meters, developed and implemented district regulations to reorganize meter reading and improve data collection, recording, and reporting, performed frequent sample data checks, strengthened the internal audit function to enforce the new data collection and processing procedures. They also prepared a program for further improvement of data quality which includes the installation of new meters, improvements to the information systems and technology, further strengthening of internal audit and creating of field enforcement units. Although these measures have resulted in cleaning the data and improving data verifiability, comparability and consistency PA cannot guarantee that initial data provided by KEK is a 100% accurate.

**Date of Future Data Quality Assessments**: February 2011

**Procedures for Future Data Quality Assessments**: Review of data systems.

| PLAN FOR DATA ANALYSIS, REVIEW & REPORTING | | | |
|---|---|---|---|
| **Data Analysis**: Analyzed in Quarterly Reports | | | |
| **Presentation of Data:** In Quarterly Reports | | | |
| **Review of Data:** By USAID in Quarterly Reports | | | |
| **Reporting of Data:** In Quarterly Reports | | | |
| **OTHER NOTES** | | | |
| **Note on Baseline/Targets**: Due to the poor quality of the available 2006 data some of the quantities used in the calculation of this indicator for the base line year had to be estimated. Upon further review, the 2006 data had to be further revised. The updated numbers are shown in the table below. | | | |
| **Other Notes**: None | | | |
| **INDICATOR VALUES** | | | |
| **Year** | **Target** | **Actual** | **Notes** |
| **2006** BASELINE YEAR | - | 31% | |
| **2007** | 30% | 30% | |
| **2008** | 25% | 20% | |
| **2009** | 10% | 21% | The major reason for the gap between the 2009 Targets and Actual is the lack of full GoK support for the implementation of the PA team's recommendations. It should also be noted that the 2009 target was far too optimistic given (1) the minimum control that PA Advisors have over KEK, (2) KEK's lack of willingness to terminate dishonest and incompetent employees, and (3) lack of GoK support to vigorously prosecute electricity theft cases. Likewise, the 2010 target is too optimistic. Until KEK is in private hands, the estimate for 2011 is not likely to be met. |
| **2010** | 15% | | |
| **2011** | 12% | | |
| **THIS SHEET UPDATED ON:** | | | |

## 4.2 LEVEL OF TECHNICAL LOSSES

**Performance Indicator Reference Sheet**

**Objective #:** 1, 2 and 3. (Support for technical preparation of the Distribution Company for privatization; Assistance with post-privatization implementation for the Distribution Company; Privatization support for the Thermal Power Plant Kosovo B.)

**Subtask #:** 1 - 8

**Indicator #:** Level of Technical Losses (LTL)

**DESCRIPTION**

**Precise Definitions:** The ratio of technical losses (TL) vs. energy delivered to distribution (EDD) for a given period of time presented as a percentage. The technical losses are calculated by the Planning and Loss Analysis Department of the Network Division. The EDD is defined as the energy delivered to the seven distribution districts (from generation, imports and small generators) and to the customers on the Land of Mines and Generation (LOMAG).

$$LTL = \frac{TL}{EDD} = [\%]$$

A decrease in the level of technical losses indicates improvement in the efficiency and effectiveness of commercial operation of KEK.

**Unit of Measure**: Percentage

**Disaggregated By**: N/A (data is presented for overall KEK performance)

**Justification/Management Utility**: The level of technical losses indicator is used by KEK to measure the effectiveness of Network maintenance and operation and the speed of Network upgrade (replacement of lines and transformers to eliminate overloads, installation of new accurate meters, eliminating load asymmetry, etc). It is an important indicator for the improvement in the technical and technological condition of KEK. Since this USAID project supports KEK, this indicator is also a measure of the effectiveness of the support for the preparation of the Distribution Company for privatization and indicates the level of achievement of Objective 1 of the project.

**PLAN FOR DATA ACQUISITION BY USAID**

**Data collection Methodology**: The Strategic Planning Department of KEK's Finance Division produces the Energy Accounting Report, and submits it to the BOD (through the Corporate Secretary) on a monthly basis. The Technical Losses presented in this report are calculated by the Planning and Loss Analysis Department of the Network Division with the use of computer models. The data from the Energy Accounting Report used to calculate the value of this indicator is referenced below:

- EDD - Appendix B, Page B-3, Table Results by district, Column: Input to Distribution, Row: Second Sub-Total
- TL - Appendix B, Page B-3, Table Results by district, Column: Technical Losses, Row: Second Sub-Total

**Data Source**: Energy Accounting Report, the Board of Directors Archive, Strategic Planning Department Archive. A copy of the Energy Accounting Report is Provided in Appendix B.

**Method of Acquisition by PA**: The data is taken from KEK's Board of Directors archive. PA assists KEK staff in generating the monthly Energy Accounting Report which is submitted to the BOD.

| |
|---|
| **Frequency and Timing of Data Acquisition**: KEK produces data monthly and PA reports to USAID Quarterly |
| **Individual (s) responsible at USAID**: Arben Nagavci |
| **Individual responsible for providing data to USAID**: Masoud Keyan |
| **Location of data Storage**: KEK BOD Archive maintained by the BOD Secretary |
| **DATA QUALITY ISSUES** |
| **Date of Initial Data Quality Assessment**: February 2010 |
| **Known data Limitations and Significance (if any):** Official data from KEK have historically been of relatively low quality due to the following limitations: lack of up-to-date software to analyze network performance, lack of accurate technical data for the network configuration, types and capacities of lines and transformers, lack of data about the customer load profile, inadequate data storage and processing and inconsistent reporting, etc.<br>Following the implementation of the recommendations of PA advisors described in the next section the data quality has improved substantially. |
| **Actions taken or Planned to Address data limitations**: PA advisors are helping KEK to improve the methodology for calculating technical losses and the quality of network data used in the calculation process. Under PA's supervision KEK has acquired the new software package DigSILENT, which is a leading power system analysis tool. KEK employees received training on the software and are currently working on collecting accurate network and load data to run the computer model. PA had also prepared a program for further improvement of data quality which includes the preparation of accurate technical drawings of the Network, the installation of system check meters, improvements to the information systems and technology, etc. |
| **Date of Future Data Quality Assessments**: February 2011 |
| **Procedures for Future Data Quality Assessments**: Review of data systems. |
| **PLAN FOR DATA ANALYSIS, REVIEW & REPORTING** |
| **Data Analysis**: Analyzed in Quarterly Reports |
| **Presentation of Data:** In Quarterly Reports |
| **Review of Data:** By USAID in Quarterly Reports |
| **Reporting of Data:** In Quarterly Reports |
| **OTHER NOTES** |
| **Note on Baseline/Targets**: Due to the poor quality of the available 2006 data some of the quantities used in the calculation of this indicator for the base line year had to be estimated. Upon further review, the 2006 data had to be further revised. The updated numbers are shown in the table below. |
| **Other Notes**: None |
| **INDICATOR VALUES** |

| Year | Target | Actual | Notes |
|---|---|---|---|
| **2006** BASELINE YEAR | - | 18.2% | |

| | | | |
|---|---|---|---|
| **2007** | 14% | 17.4% | |
| **2008** | 17% | 16.6% | |
| **2009** | 16.5% | 17.7 | PA Advisors are reviewing (1) the accuracy of the input data and (2) the calculation methodology used to determine technical losses. |
| **2010** | 16.4% | - | |
| **2011** | 16,3% | - | |
| **THIS SHEET UPDATED ON:** | | | |

## 4.3 RATIO OF ENERGY BILLED VERSUS ENERGY AVAILABLE FOR SALE

### Performance Indicator Reference Sheet

**Objective #:** 1, 2 and 3. (Support for technical preparation of the Distribution Company for privatization; Assistance with post-privatization implementation for the Distribution Company; Privatization support for the Thermal Power Plant Kosovo B.)

**Subtask #:** 1 - 8

**Indicator #:** Ratio of Energy Billed versus Energy Available for Sale (REB)

**DESCRIPTION**

**Precise Definitions:** The ratio of energy billed versus energy available for sale (EAFS) presented as a percentage. Energy Billed (EB) is the total consumption of electricity in MWH by all customers of KEK measured by the meters and reflected in the bills of the customers for the period. EAFS is the energy delivered to the distribution network (EDD) (from KEK generation and imports), less the technical losses (TL), less KEK's own consumption (OC), less un-billable minorities (UB) and plus the energy supplied by small generators (EFSG), measured in MWH.

$$REB = \frac{EB}{EAFS} = \frac{EB}{(EDD+EFSG) - TL - OC - UB} \quad [\%]$$

An increase in the ratio of energy billed versus energy available for sale indicates improvement in the efficiency and effectiveness of commercial operation of KEK.

**Unit of Measure**: Percentage

**Disaggregated By**: N/A (data is presented for overall KEK performance)

**Justification/Management Utility**: The ratio of energy billed versus energy available for sale is used by KEK to measure the effectiveness of its metering and billing function. It is an important indicator of the efficiency of KEK commercial operations. Since this USAID project supports KEK, this indicator is also a measure of the effectiveness of the support for the preparation of the Distribution Company for privatization and indicates the level of achievement of Objective 1 of the project.

**PLAN FOR DATA ACQUISITION BY USAID**

**Data collection Methodology**: The Strategic Planning Department of KEK's Finance Division produces the Energy Accounting Report, and submits it the BOD (through the Corporate Secretary) on a monthly basis. PA assisted KEK in developing the reporting methodology and defining the format of the report. The data for the report is provided to the Strategic Planning Department by KEK Regulatory Affairs Dept (KEK generation, imports), Supply Division (Energy Billed, KEK Own Consumption, Un-billable Minorities) and Network Division (Technical Losses, Energy Delivered to Distribution, Energy supplied by HPP). All data with the exception of Technical Losses is based on meter readings that are recorded and kept in special archives (electronic and paper). The Technical Losses are calculated by the Planning and Loss Analysis Department of the Network Division with the use of computer models. The technical loss calculations and the meter readings are then used to produce the Energy Accounting Report, which is the source of data for the calculation of this indicator. The data from the Energy Accounting Report used to calculate the value of this indicator is referenced below:

- EDD+EFHPP - Appendix B, Page B-3, Table Results by district, Column: Input to Distribution, Row: Total
- TL - Appendix B, Page B-3, Table Results by district, Column: Technical Losses, Row: Total

| |
|---|
| • OC - Appendix B, Page B-3, Table Results by district, Column: Internal Cons., Row: Total<br>• UB - Appendix B, Page B-3, Table Results by district, Column: Minorities, Un-billable &Uncollectible, Row: Total<br>• EB - Appendix B, Page B-3, Table Results by district, Column: Energy Billed [MWh], Row: Total |
| **Data Source**: Energy Accounting Report, the Board of Directors Archive, Strategic Planning Department Archive. A copy of the Energy Accounting Report is provided in Appendix B. |
| **Method of Acquisition by PA**: The data is taken from KEK's Board of Directors archive. PA assists KEK staff in generating the monthly Energy Accounting Report which is submitted to the BOD. |
| **Frequency and Timing of Data Acquisition**: KEK produces data monthly and PA reports to USAID Quarterly |
| **Individual (s) responsible at USAID**: Arben Nagavci |
| **Individual responsible for providing data to USAID**: Masoud Keyan |
| **Location of data Storage**: KEK BOD Archive maintained by the BOD Secretary |
| **DATA QUALITY ISSUES** |
| **Date of Initial Data Quality Assessment**: February 2010 |
| **Known data Limitations and Significance (if any):** Official data from KEK have historically been of relatively low quality due to the following limitations; lack of meters and low quality of existing meters, incoherent meter reading and meter recording process, inadequate data storage and processing and inconsistent reporting.<br>Following the implementation of the recommendations of the USAID advisors described in the next section the data quality has improved substantially. |
| **Actions taken or Planned to Address data limitations**: Initial meter reading data (used in the calculation of energy billed and energy available for sale) is provided by KEK.. USAID advisors developed a methodology for verification of the energy balance (thus checking the compatibility of meter readings), supervised the installation of check meters, developed and implemented district regulations to reorganize meter reading and improve data collection, recording, and reporting, performed frequent sample data checks, strengthened the internal audit function to enforce the new data collection and processing procedures. They also prepared a program for further improvement of data quality which includes the installation of new meters, improvements to the information systems and technology, further strengthening of internal audit and creating of field enforcement units. Although these measures have resulted in cleaning the data and improving data verifiability, comparability and consistency PA cannot guarantee that initial data provided by KEK is a 100% accurate. |
| **Date of Future Data Quality Assessments**: February 2011 |
| **Procedures for Future Data Quality Assessments**: Review of data systems. |
| **PLAN FOR DATA ANALYSIS, REVIEW & REPORTING** |
| **Data Analysis**: Analyzed in Quarterly Reports |
| **Presentation of Data:** In Quarterly Reports |
| **Review of Data:** By USAID in Quarterly Reports |
| **Reporting of Data:** In Quarterly Reports |

| OTHER NOTES | | | |
|---|---|---|---|
| **Note on Baseline/Targets**: Due to the poor quality of the available 2006 data some of the quantities used in the calculation of this indicator for the base line year had to be estimated. Upon further review, the 2006 data had to be further revised. The updated numbers are shown in the status section for the two items in bold. | | | |
| **Other Notes**: None | | | |
| **INDICATOR VALUES** | | | |
| **Year** | **Target** | **Actual** | **Notes** |
| **2006** BASELINE YEAR | - | 69.1% | |
| **2007** | 75% | 69.9% | |
| **2008** | 75% | 79.8% | |
| **2009** | 90% | 79.3% | The 2009 target was overly optimistic given (1) the minimum control that PA Advisors have over KEK, (2) KEK's lack of willingness to terminate dishonest and incompetent employees, and (3) lack of GoK support to vigorously prosecute electricity theft cases. |
| **2010** | 85% | - | |
| **2011** | 88% | - | |
| **THIS SHEET UPDATED ON:** | | | |

## 4.4 RATIO OF REVENUE COLLECTED VERSUS REVENUE BILLED

### Performance Indicator Reference Sheet

**Objective #:** 1, 2 and 3. (Support for technical preparation of the Distribution Company for privatization; Assistance with post-privatization implementation for the Distribution Company; Privatization support for the Thermal Power Plant Kosovo B.)

**Subtask #:** 1 - 8

**Indicator #:** Ratio of Revenue Collected versus Revenue Billed (RRC)

**DESCRIPTION**

**Precise Definitions:** The ratio of revenue collected versus revenue billed presented as a percentage. Revenue Billed (RB) is the sum of all customer bills in Euros (calculated on the basis of the readings of the customer meters) over a given period of time. Revenue Collected (RC) is the sum of all customer payments in Euros over a period of time specified in the customer bills for the same period. All values are reported inclusive of Value Added Tax (VAT) and the fee for Radio Television Kosovo (RTK) fees, where applicable.

$$RRC = \frac{RC}{RB}[\%]$$

An increase in the ratio of revenue collected versus revenue billed indicates improvement in the efficiency and effectiveness of commercial operation of KEK.

**Unit of Measure**: Percentage

**Disaggregated By**: N/A (data is presented for overall KEK performance)

**Justification/Management Utility**: The ratio of revenue collected versus revenue billed is used by KEK to measure the efficiency of its cash collection processes and practices. It is an important gauge of the financial performance of KEK. Since this USAID project supports KEK, this indicator is also a measure of the effectiveness of the support for the preparation of the Distribution Company for privatization and indicates the level of achievement of Objective 1 of the project.

**PLAN FOR DATA ACQUISITION BY USAID**

**Data collection Methodology**: The Strategic Planning Department of KEK's Finance Division produces the Energy Accounting Report, and submits it to the BOD (through the Corporate Secretary) on a monthly basis. PA assisted KEK in developing the reporting methodology and defining the format of the report. The data for the report is provided to the Strategic Planning Department by KEK Supply Division (both Revenue Billed and Revenue Collected). The data from the Energy Accounting Report used to calculate the value of this indicator is referenced below:

- RB - Appendix B, Page B-3, Table Results by district, Column: Energy Billed €, Row: Total
- RC - Appendix B, Page B-3, Table Results by district, Column: Collections €, Row: Total

**Data Source**: Energy Accounting Report, the Board of Directors Archive, Strategic Planning Department Archive. A copy of the Energy Accounting Report is provided in Appendix B.

**Method of Acquisition by PA**: The data is taken from KEK's Board of Directors archive. PA assists KEK staff in generating the monthly Energy Accounting Report, which is submitted to the BOD.

**Frequency and Timing of Data Acquisition**: KEK produces data monthly and PA reports to USAID Quarterly

| |
|---|
| **Individual (s) responsible at USAID**: Arben Nagavci |
| **Individual responsible for providing data to USAID**: Masoud Keyan |
| **Location of data Storage**: KEK BOD Archive maintained by the BOD Secretary |
| **DATA QUALITY ISSUES** |
| **Date of Initial Data Quality Assessment**: February 2010 |
| **Known data Limitations and Significance (if any):** Official data from KEK for this indicator is the Customer Care Package (CCP), KEK's customer record and billing system. Although billing and collection data contained in CCP are of fairly high quality, there is always potential for errors and employee manipulation that may not be detected upon audit.<br>Following the implementation of the recommendations of the USAID advisors described in the next section the data quality has improved substantially. |
| **Actions taken or Planned to Address data limitations**: Initial meter reading data (used to calculate revenue billed) and cash collection data (used to calculate revenue collected) is provided by KEK. USAID advisors have developed a methodology for accounting and verification of the energy balance data, supervised the installation of check meters, developed and implemented district regulations to reorganize meter reading and improve data collection, recording, and reporting, performed frequent sample data checks, strengthened the internal audit function to enforce the new data collection and processing procedures and audit cash registers and bank accounts. They also implementing a program for further improvement of data quality which includes the installation of new meters, introducing "cash safeguards", improvements to the information systems and technology, further strengthening of internal audit and creating of field enforcement units. Although these measures have resulted in cleaning the data and improving data verifiability, comparability and consistency PA cannot guarantee that initial data is a 100% accurate. |
| **Date of Future Data Quality Assessments**: February 2011 |
| **Procedures for Future Data Quality Assessments**: Review of data systems. |
| **PLAN FOR DATA ANALYSIS, REVIEW & REPORTING** |
| **Data Analysis**: Analyzed in Quarterly Reports |
| **Presentation of Data:** In Quarterly Reports |
| **Review of Data:** By USAID in Quarterly Reports |
| **Reporting of Data:** In Quarterly Reports |
| **OTHER NOTES** |
| **Note on Baseline/Targets**: Unlike the energy data used as baseline/target in other indicators , there were no problems with the baseline data for this indicator |
| **Other Notes**: None |

**INDICATOR VALUES**

| Year | Target | Actual | Notes |
|---|---|---|---|

| | | | |
|---|---|---|---|
| **2006** BASELINE YEAR | - | 74.2% | |
| **2007** | 77% | 76.6% | |
| **2008** | 80% | 75.6% | The decrease in collection rate (2008 vs. 2007) is due to the billing of a high amount of reclaimed losses and including marginal customers |
| **2009** | 89% | 81.4% | |
| **2010** | 86% | - | |
| **2011** | 90% | - | |
| **THIS SHEET UPDATED ON:** | | | |

## 4.5 REVENUE COLLECTED AS A PERCENTAGE OF THE VALUE OF ENERGY AVAILABLE FOR SALE

### Performance Indicator Reference Sheet

**Objective #:** 1, 2 and 3. (Support for technical preparation of the Distribution Company for privatization; Assistance with post-privatization implementation for the Distribution Company; Privatization support for the Thermal **#:** 1 - 8

**Indicator** Power Plant Kosovo B.)

**Subtask #:** Revenue Collected as a Percentage of the Value of Energy Available for Sale (RCEA)

**DESCRIPTION**

**Precise Definitions:** Revenue collected as a percentage of the value of energy available for sale is defined as the product of two ratios – the ratio of Revenue Collected versus Revenue Billed multiplied by the ratio of Energy Billed versus Energy Available for Sale. Revenue Collected (RC) is the sum of all customer payments in Euros over a period of time specified in the customer bills for the same period. Revenue Billed (RB) is the sum of all customer bills in Euros (calculated on the basis of the readings of the customer meters) over a given period of time. Energy Billed (EB) is the total consumption of electricity in MWH by all customers of KEK measured by the meters and reflected in the bills of the customers for the period. EAFS is the energy delivered to the distribution network (EDD) (from KEK generation and imports), less the technical losses (TL), less KEK's own consumption (OC), less un-billable minorities (UB) and plus the energy supplied by small generators - EFSG), measured in MWH. The easiest way to calculate this indicator is to multiply the Revenue Collected vs. Revenue Billed indicator by the Energy Billed vs. Energy Available for Sale Indicator.

$$RCEA = \frac{RC}{RB} \times \frac{EB}{EAFS} = RRC \times REB\ [\%]$$

An increase in RCEA indicates improvement in the efficiency and effectiveness of commercial operation of KEK.

**Unit of Measure**: Percentage

**Disaggregated By**: N/A (data is presented for overall KEK performance)

**Justification/Management Utility**: Revenue collected as a percentage of the value of energy available for sale is a summary indicator used by KEK to measure the overall efficiency and effectiveness of its distribution operations. It is an aggregate measure of the technical, commercial and financial performance of the company. Since this USAID project supports KEK, this indicator is also a measure of the effectiveness of the support for the preparation of the Distribution Company for privatization and indicates the level of achievement of Objective 1 of the project.

**PLAN FOR DATA ACQUISITION BY USAID**

**Data collection Methodology**: The Strategic Planning Department of KEK's Finance Division produces the Energy Accounting Report, and submits it to the BOD (through the Corporate Secretary) on a monthly basis. PA assisted KEK in developing the reporting methodology and defining the format of the report. The data for the report is provided to the Strategic Planning Department by KEK Regulatory Affairs Dept (KEK generation, imports), Supply Division (Energy Billed, KEK Own Consumption, Un-billable Minorities) and Network Division (Technical Losses, Energy Delivered to Distribution, Energy supplied by small generators). The data from the Energy Accounting Report used to calculate the value of this indicator is referenced below:

- RB - Appendix B, Page B-3, Table Results by district, Column: Energy Billed €, Row: Total
- RC - Appendix B, Page B-3, Table Results by district, Column: Collections €, Row: Total

- EB - Appendix B, Page B-3, Table Results by district, Column: Energy Billed [MWh], Row: Total
- EAFS = (EDD+EFSG) – TL – OC – UB
- EDD+EFSG - Appendix B, Page B-3, Table Results by district, Column: Input to Distribution, Row: Total
- TL - Appendix B, Page B-3, Table Results by district, Column: Technical Losses, Row: Total
- OC - Appendix B, Page B-3, Table Results by district, Column: Internal Cons., Row: Total
- UB - Appendix B, Page B-3, Table Results by district, Column: Minorities, Un-billable &Uncollectible, Row: Total
- EB - Appendix B, Page B-3, Table Results by district, Column: Energy Billed [MWh], Row: Total

**Data Source**: Energy Accounting Report, the Board of Directors Archive, Strategic Planning Department Archive. A copy of the Energy Accounting Report is Provided in Appendix B.

**Method of Acquisition by PA**: The data is taken from KEK's Board of Directors archive. PA assists KEK staff in generating the monthly Energy Accounting Report, which is submitted to the BOD.

**Frequency and Timing of Data Acquisition**: KEK produces data monthly and PA reports to USAID Quarterly

**Individual (s) responsible at USAID**: Arben Nagavci

**Individual responsible for providing data to USAID**: Masoud Keyan

**Location of data Storage**: KEK BOD Archive maintained by the BOD Secretary

**DATA QUALITY ISSUES**

**Date of Initial Data Quality Assessment**: February 2010

**Known data Limitations and Significance (if any):** Official data from KEK have historically been of relatively low quality due to the following limitations; lack of meters and low quality of existing meters, incoherent meter reading and meter recording process, inadequate data storage and processing and inconsistent reporting.

Following the implementation of the recommendations of the USAID advisors described in the next section the data quality has improved substantially.

**Actions taken or Planned to Address data limitations**: Initial meter reading data (used in the calculation of the value of energy available for sale) and cash collection (used in the calculation of revenue collected) is provided by KEK.. USAID advisors developed a methodology for verification of the energy balance (thus checking the compatibility of meter readings), supervised the installation of check meters, developed and implemented district regulations to reorganize meter reading and improve data collection, recording, and reporting, performed frequent sample data checks, strengthened the internal audit function to enforce the new data collection and processing procedures. They also prepared a program for further improvement of data quality which includes the installation of new meters, improvements to the information systems and technology, further strengthening of internal audit and creating of field enforcement units. Although these measures have resulted in cleaning the data and improving data verifiability, comparability and consistency PA cannot guarantee that initial data provided by KEK is a 100% accurate.

**Date of Future Data Quality Assessments**: February 2011

**Procedures for Future Data Quality Assessments**: Review of data systems.

**PLAN FOR DATA ANALYSIS, REVIEW & REPORTING**

| | | | |
|---|---|---|---|
| **Data Analysis**: Analyzed in Quarterly Reports | | | |
| **Presentation of Data:** In Quarterly Report | | | |
| **Review of Data:** By USAID in Quarterly Reports | | | |
| **Reporting of Data:** In quarterly reports | | | |
| **OTHER NOTES** | | | |
| **Note on Baseline/Targets**: Due to the poor quality of the available 2006 data some of the quantities used in the calculation of this indicator for the base line year had to be estimated. Upon further review, the 2006 data had to be further revised. The updated numbers are shown in the table below. | | | |
| **Other Notes**: None | | | |
| **INDICATOR VALUES** | | | |
| **Year** | **Target** | **Actual** | **Notes** |
| **2006** BASELINE YEAR | - | 51.3% | |
| **2007** | 50% | 53.3% | |
| **2008** | 60% | 60.3% | |
| **2009** | 80% | 64.5% | The 2009 target was overly optimistic given (1) the minimum control that PA Advisors have over KEK, (2) KEK's lack of willingness to terminate dishonest and incompetent employees, and (3) lack of GoK support to vigorously prosecute electricity theft cases. |
| **2010** | 73% | - | |
| **2011** | 79% | - | |
| **THIS SHEET UPDATED ON:** | | | |

## 4.6 REVENUE COLLECTED

**Performance Indicator Reference Sheet**

| |
|---|
| **Objective #:** 1, 2 and 3. (Support for technical preparation of the Distribution Company for privatization; Assistance with post-privatization implementation for the Distribution Company; Privatization support for the Thermal Power Plant Kosovo B.)<br>**Subtask #:** 1 - 8<br>**Indicator #:** Revenue Collected (RC) |
| **DESCRIPTION** |
| **Precise Definitions:** Revenue Collected (RC) is the sum of all customer payments in Euros over a period of time.. Amounts are inclusive of Value Added Tax (VAT) and the Radio Television Kosovo (RTK) fee, where applicable. An increase in revenue collected indicates improvement in the efficiency and effectiveness of commercial operation of KEK. |
| **Unit of Measure**: Currency [Euro] |
| **Disaggregated By**: N/A (data is presented for overall KEK performance) |
| **Justification/Management Utility**: Revenue Collected is used by KEK to assess its financial position and performance. It is an important indicator of KEK's financial viability. Since this USAID project supports KEK, this indicator is also a measure of the effectiveness of the support for the preparation of the Distribution Company for privatization and indicates the level of achievement of Objective 1 of the project. |
| **PLAN FOR DATA ACQUISITION BY USAID** |
| **Data collection Methodology**: The Strategic Planning Department of KEK's Finance Division produces the Energy Accounting Report, and submits it to the BOD (through the Corporate Secretary) on a monthly basis. PA assisted KEK in developing the reporting methodology and defining the format of the report. The data for the report is provided to the Strategic Planning Department by KEK Supply Division.<br>The data from the Energy Accounting Report used to calculate the value of this indicator is referenced below:<br>• RC - Appendix B, Page B-3, Table Results by district, Column: Collections €, Row: Total |
| **Data Source**: Energy Accounting Report, the Board of Directors Archive, Strategic Planning Department Archive. A copy of the Energy Accounting Report is Provided in Appendix B. |
| **Method of Acquisition by PA**: The data is taken from KEK's Board of Directors archive. PA assists KEK staff in generating the monthly Energy Accounting Report, which is submitted to the BOD. |
| **Frequency and Timing of Data Acquisition**: KEK produces data monthly and PA reports to USAID Quarterly |
| **Individual (s) responsible at USAID**: Arben Nagavci |
| **Individual responsible for providing data to USAID**: Masoud Keyan |
| **Location of data Storage**: KEK BOD Archive maintained by the BOD Secretary |
| **DATA QUALITY ISSUES** |
| **Date of Initial Data Quality Assessment**: February 2010 |
| **Known data Limitations and Significance (if any):** The quality of the data for this indicator is quite good. The |

| |
|---|
| value is verified by comparison of the information in KEK's Customer Care Package and bank deposits. This data is subject to audit by both KEK internal and external auditors. |
| **Actions taken or Planned to Address data limitations**: Continue to support the internal audit function. |
| **Date of Future Data Quality Assessments**: February 2011 |
| **Procedures for Future Data Quality Assessments**: Review of data systems. |
| **PLAN FOR DATA ANALYSIS, REVIEW & REPORTING** |
| **Data Analysis**: Analyzed in Quarterly Reports |
| **Presentation of Data:** In Quarterly Reports |
| **Review of Data:** By USAID in Quarterly Reports |
| **Reporting of Data:** In Quarterly Reports |
| **OTHER NOTES** |
| **Note on Baseline/Targets**: |
| **Other Notes**: None |

**INDICATOR VALUES**

| Year | Target | Actual | Notes |
|---|---|---|---|
| **2006** BASELINE YEAR | - | €96mm | |
| **2007** | €106mm | €110.8mm | |
| **2008** | €116mm | €135mm | |
| **2009** | €140mm | €160mm | |
| **2010** | €155mm | - | |
| **2011** | €160mm | - | |

**THIS SHEET UPDATED ON:**

# 5. TRAINING INDICATORS

## 5.1 NUMBER OF PEOPLE WHO RECEIVED TRAINING IN TECHNICAL ENERGY FIELD

**Performance Indicator Reference Sheet**

| |
|---|
| **Objective #:** 1, 2 and 3. (Support for technical preparation of the Distribution Company for privatization; Assistance with post-privatization implementation for the Distribution Company; Privatization support for the Thermal Power Plant Kosovo B.)<br>**Subtask #:** 1 - 8<br>**Indicator #:** Number of People who Received Training in Technical Energy Field |
| **DESCRIPTION** |
| **Precise Definitions:** Number of KEK employees that received training that is sponsored, facilitated or delivered by a project team member on technical areas in the energy sector. Training is defined as training for at least one hour on a topic delivered to a KEK employee via seminars, workshops, formal coursework and on-the-job training or coaching. Coaching is training on a specific subject on which to improve the knowledge of the employee as opposed to advice on daily operational issues.<br>An increase in number of people who received training in the technical energy field indicates an improvement in the ability of KEK employees to competently manage the commercial operation of KEK. |
| **Unit of Measure**: Number of people |
| **Disaggregated By**: Gender , where M = Men and W = Women |
| **Justification/Management Utility**: The increase in number of people who received training in the technical energy field is an important indicator used to demonstrate knowledge transfer from the contractor to the counterpart organization and indicates the level of achievement of Objective 1 of the project. |
| **PLAN FOR DATA ACQUISITION BY USAID** |
| **Data collection Methodology**: The training data is collected by the PA trainer. The names and gender of each training participant is collected from their sign-in sheets on the day of training or maintained by the relevant PA advisor in the case of on the job training/ coaching. |
| **Data Source**: PA's Trainer Reports (A sample of PA's Trainer Report is provided in Appendix C) |
| **Method of Acquisition by PA**: PA obtains this data by keeping a copy of the sign-in sheets from the training seminar or the relevant PA advisor maintains a record of individuals receiving on the job coaching. |
| **Frequency and Timing of Data Acquisition**: PA collects this data after each training course and each coaching session and provides the data in the USAID Quarterly Report. |
| **Individual (s) responsible at USAID**: Arben Nagavci |
| **Individual responsible for providing data to USAID**: Masoud Keyan |
| **Location of data Storage**: PA's project central files in the office of the Administrative Manager |
| **DATA QUALITY ISSUES** |
| **Date of Initial Data Quality Assessment**: February 2010 |

| |
|---|
| **Known data Limitations and Significance (if any):** |
| **Actions taken or Planned to Address data limitations**: |
| **Date of Future Data Quality Assessments**: February 2011 |
| **Procedures for Future Data Quality Assessments**: |
| **PLAN FOR DATA ANALYSIS, REVIEW & REPORTING** |
| **Data Analysis**: Analyzed in quarterly reports |
| **Presentation of Data:** In the quarterly reports |
| **Review of Data:** By USAID in the quarterly reports |
| **Reporting of Data:** The training data is reported in the quarterly reports. (PA's Trainer reports are also included in an appendix to the Quarterly Report). For each training event in the quarter, the following is presented: the date of training, the name of the trainer, the topic and a list of persons trained disaggregated by gender.. |
| **OTHER NOTES** |
| **Note on Baseline/Targets**: |
| **Other Notes**: None |
| **INDICATOR VALUES** |

| Year | Target | Actual | Notes |
|---|---|---|---|
| **2006** BASELINE YEAR | - | 0 | |
| **2007** | 40 | 231 | |
| **2008** | 60<br>M=42, W=18 | 54<br>M=54, W=0 | |
| **2009** | 60<br>M=48 W=12 | 36<br>M -32, W-4 | |
| **2010** | 40<br>M -35, W-5 | | |
| **2011** | 40<br>M -35, W-5 | | |

**THIS SHEET UPDATED ON:** Annually

## 5.2 NUMBER OF PEOPLE WHO RECEIVED TRAINING IN ENERGY RELATED BUSINESS MANAGEMENT FIELD

### Performance Indicator Reference Sheet

**Objective #:** 1, 2 and 3. (Support for technical preparation of the Distribution Company for privatization; Assistance with post-privatization implementation for the Distribution Company; Privatization support for the Thermal Power Plant Kosovo B.)

**Subtask #:** 1 - 8

**Indicator #:** Number of People who Received Training in Energy Related Business Management Field

**DESCRIPTION**

**Precise Definitions:** Number of KEK employees that receive training that is sponsored, facilitated or delivered by a project team member on energy related business management topics. Training is defined as training for at least one hour on a topic received via seminars, workshops, formal coursework, on-the-job training/coaching. Coaching is training on a specific subject on which to improve the knowledge of the employee as opposed to advice on daily operational issues.

Topics in the energy related business management field will be selected based on identified needs at KEK and may include customer service, communications, management leadership, planning and organization, budgeting, investment, privatization as it pertains to a utility.

An increase in number of people who received training in the energy related business management field indicates an improvement in the ability of KEK employees to competently manage the commercial operation of KEK.

**Unit of Measure**: Number of people

**Disaggregated By**: Gender, where M = Men and W = Women

**Justification/Management Utility**: The increase in number of people who received training in the energy related business management field is an important indicator used to demonstrate knowledge transfer from the contractor to the counterpart organization and indicates the level of achievement of Objective 1 of the project.

**PLAN FOR DATA ACQUISITION BY USAID**

**Data collection Methodology**: The training data is collected by the PA trainer. The names and gender of each training participant is collected from their sign-in sheets on the day of training or maintained by the relevant PA advisor in the case of on the job training/coaching.

**Data Source**: PA's Trainer Reports (A sample is provided in Appendix C)

**Method of Acquisition by PA**: PA obtains this data in two ways: either by keeping a copy of the sign-in sheets from the training seminar or the relevant PA advisor maintains the record of individuals receiving on the job training or coaching.

**Frequency and Timing of Data Acquisition**: PA collects this data after each training course and each coaching session and provides the data in the USAID Quarterly Report.

**Individual (s) responsible at USAID**: Arben Nagavci

**Individual responsible for providing data to USAID**: Masoud Keyan

**Location of data Storage**: PA's project central files in the office of the Administrative Manager.

*5. Training Indicators…*

| DATA QUALITY ISSUES | | | |
|---|---|---|---|
| **Date of Initial Data Quality Assessment**: February 2010 | | | |
| **Known data Limitations and Significance (if any):** | | | |
| **Actions taken or Planned to Address data limitations**: | | | |
| **Date of Future Data Quality Assessments**: February 2011 | | | |
| **Procedures for Future Data Quality Assessments**: | | | |
| **PLAN FOR DATA ANALYSIS, REVIEW & REPORTING** | | | |
| **Data Analysis**: Analyzed in quarterly reports | | | |
| **Presentation of Data:** in the quarterly reports | | | |
| **Review of Data:** by USAID in the quarterly reports | | | |
| **Reporting of Data:** The training data is reported in the quarterly reports. (PA's Trainer reports are also included in an appendix to the Quarterly Report). For each training event in the quarter, the following is presented the date of training, the name of the trainer, the topic and a list of persons trained disaggregated by gender. | | | |
| **OTHER NOTES** | | | |
| **Note on Baseline/Targets**: | | | |
| **Other Notes**: None | | | |
| **INDICATOR VALUES** | | | |
| **Year** | **Target** | **Actual** | **Notes** |
| **2006** BASELINE YEAR | - | 0 | |
| **2007** | 80 | 149 | |
| **2008** | 100<br>M= 70, W=30 | 69<br>M=61, W=8 | |
| **2009** | 60<br>M=30,W=30 | 261<br>M -196 W-65 | |
| **2010** | 200<br>M -150 W-50 | | |
| **2011** | 200<br>M -150 W-50 | | |
| **THIS SHEET UPDATED ON:** annually | | | |

## 6. DATA QUALITY ASSESSMENTS (DQA)

### 6.1 DQA FOR PERCENTAGE OF UN-SERVED LOAD

| USAID/Kosovo<br>Data Quality Assessment Form | | | |
|---|---|---|---|
| **Objective:** | Economic Growth | | |
| **Area:** | Infrastructure | | |
| **Element:** | Modern Energy Services | | |
| Indicator Title: | Percentage for Un-served Load | | |
| Is this a Standard or Custom Indicator? If standard make sure the title matches the title in the Indicator Handbooks. | Custom indicator | | |
| Data Source(s): | Energy Accounting Report, the Board of Directors Archive, Strategic Planning Department Archive. | | |
| USAID Control over Data: | Medium | Implementing partner is data source however; USAID reviews data upon submission in the quarterly report | |
| Partner or Contractor Who Provided the Data (if applicable) | PA Government Services Inc. | | |
| Year or Period for Which the Data Are Being Reported | FY10 | | |
| | | | |
| Data Assessment methodology | Regular reviews together with USAID implementing partners of comparability and consistency. | | |
| Date(s) of Assessment: | February 2010 | | |
| Assessment Team Members: | COTR and Chief of Party | | |
| *For Office Use Only*<br>Signatures of the Assessment team members | | | |
| **CATEGORY** | **YES** | **NO** | **COMMENTS** |
| **VALIDITY** | | | |
| Is there a direct relationship between the program activity and what is being measured? If not explain connection the result. | X | | The indicator is used by KEK to measure the efficiency of its energy accounting and the success if its efforts to fight electricity theft and |

| | | | |
|---|---|---|---|
| | | | corruption. It is an important gauge for the commercial viability of KEK. |
| Can the result be plausibly attributed to USG assistance? | X | | Since this USAID project supports KEK, this indicator is also a measure of the effectiveness of the support for the preparation of the Distribution Company for privatization and indicates the level of achievement of Objective 1 of the project. |
| Are the people collecting data qualified and properly supervised? | X | | The data is being collected by KEK employees and reported to KEK BOD. |
| Are steps taken to correct known data errors? | X | | USAID implementing partners developed a methodology for accounting and verification of the energy balance data, supervised the installation of check meters, developed and implemented district regulations to reorganize meter reading and improve data collection, recording, and reporting, performed frequent sample data checks, strengthened the internal audit function to enforce the new data collection and processing procedures. |
| Were known data collection problems appropriately assessed? | X | | USAID implementing partners prepared a program for further improvement of data quality which includes the installation of new meters, improvements to the information systems and technology, further strengthening of internal audit and creating of field enforcement units. |
| Are steps being taken to limit transcription error? | X | | |
| Are data quality problems clearly described in final reports? | X | | |
| **RELIABILITY** | | | |
| Is a consistent data collection process used from year to year, location to location, data source to data source? | X | | |
| Are there procedures in place for periodic review of data collection, maintenance and documented in writing? | X | | |
| Are data quality problems clearly described in final reports? | X | | |

| | | | |
|---|---|---|---|
| **TIMELINESS** | | | |
| Is a regularized schedule of data collection in place to meet program management needs? | X | | Data is collected on a monthly basis and reported quarterly. |
| Is data properly stored and readily available? | X | | All data is kept in KEK BOD Archive. A copy of the data is kept in the PA Archive of KEK Network and Supply Project. |
| **PRECISION** | | | |
| Is there a method for detecting duplicate data? | X | | Duplicate data is eliminated in the process of the preparation of the data reports. |
| Is there a method for detecting missing data? | X | | Missing data is readily detected in the process of preparation of the energy balance (missing data causes imbalances). |
| **INTEGRITY** | | | |
| Are there proper safeguards in place to prevent unauthorized changes to the data? | X | | Data back-ups are kept in the in the PA Archive of KEK Network and Supply Project. |
| Is there a need for an independent review of results reported? | | X | No. |

| **IF NO RELEVANT DATA WERE AVAILABLE** | **COMMENTS** |
|---|---|
| If no recent relevant data are available for this indicator, why not? | N/A |
| What concrete actions are now being undertaken to collected and report these data as soon as possible? | N/A |
| When will data be reported? | N/A |

| **SUMMARY** | **COMMENTS** |
|---|---|
| Based on the assessment relative to the five standards, what is the overall conclusion regarding the quality of the data? | On the whole the data quality is adequate for the purposes of performance evaluation. |
| Significance of limitations (if any): | Source data is provided by KEK. Despite the thorough examination by the implementing partner some data may not be 100% accurate. |
| Actions needed to address limitations (given level of USAID control over data): | Implement the program developed by USAID implementing partners |

## 6.2 DQA FOR LEVEL OF COMMERCIAL LOSSES

| **USAID/Kosovo**<br>**Data Quality Assessment Form** | |
|---|---|
| **Objective:** | Economic Growth |
| **Area:** | Infrastructure |
| **Element:** | Modern Energy Services |
| Indicator Title: | Level of commercial losses (LCL) |
| Is this a Standard or Custom Indicator? If standard make sure the title matches the title in the Indicator Handbooks. | Standard indicator |
| Data Source(s): | Energy Accounting Report, the Board of Directors Archive, Strategic Planning Department Archive. |
| USAID Control over Data: | Medium Implementing partner is data source however; USAID reviews data upon submission in the quarterly report |
| Partner or Contractor Who Provided the Data (if applicable) | PA Government Services Inc. |
| Year or Period for Which the Data Are Being Reported | FY10 |
| | |
| Data Assessment methodology | Regular reviews together with USAID implementing partners of comparability and consistency. |
| Date(s) of Assessment: | February 2010 |
| Assessment Team Members: | COTR and Chief of Party |
| *For Office Use Only*<br>Signatures of the Assessment team members | |

| **CATEGORY** | **YES** | **NO** | **COMMENTS** |
|---|---|---|---|
| **VALIDITY** | | | |
| Is there a direct relationship between the program activity and what is being measured? If not explain connection the result. | X | | The indicator is used by KEK to measure the efficiency of its energy accounting and the success if its efforts to fight electricity theft and corruption. It is an important gauge for |

| | | | |
|---|---|---|---|
| | | | the commercial viability of KEK. |
| Can the result be plausibly attributed to USG assistance? | X | | Since this USAID project supports KEK, this indicator is also a measure of the effectiveness of the support for the preparation of the Distribution Company for privatization and indicates the level of achievement of Objective 1 of the project. |
| Are the people collecting data qualified and properly supervised? | X | | The data is being collected by KEK employees and reported to KEK BOD. |
| Are steps taken to correct known data errors? | X | | USAID implementing partners developed a methodology for accounting and verification of the energy balance data, supervised the installation of check meters, developed and implemented district regulations to reorganize meter reading and improve data collection, recording, and reporting, performed frequent sample data checks, strengthened the internal audit function to enforce the new data collection and processing procedures. |
| Were known data collection problems appropriately assessed? | X | | USAID implementing partners prepared a program for further improvement of data quality which includes the installation of new meters, improvements to the information systems and technology, further strengthening of internal audit and creating of field enforcement units. |
| Are steps being taken to limit transcription error? | X | | |
| Are data quality problems clearly described in final reports? | X | | |
| **RELIABILITY** | | | |
| Is a consistent data collection process used from year to year, location to location, data source to data source? | X | | |
| Are there procedures in place for periodic review of data collection, maintenance and documented in writing? | X | | |
| Are data quality problems clearly described in final reports? | X | | |

| | | | |
|---|---|---|---|
| **TIMELINESS** | | | |
| Is a regularized schedule of data collection in place to meet program management needs? | X | | Data is collected on a monthly basis and reported quarterly. |
| Is data properly stored and readily available? | X | | All data is kept in KEK BOD Archive. A copy of the data is kept in the PA Archive of KEK Network and Supply Project. |
| **PRECISION** | | | |
| Is there a method for detecting duplicate data? | X | | Duplicate data is eliminated in the process of the preparation of the data reports. |
| Is there a method for detecting missing data? | X | | Missing data is readily detected in the process of preparation of the energy balance (missing data causes imbalances). |
| **INTEGRITY** | | | |
| Are there proper safeguards in place to prevent unauthorized changes to the data? | X | | Data back-ups are kept in the in the PA Archive of KEK Network and Supply Project. . |
| Is there a need for an independent review of results reported? | | X | No. |

| **IF NO RELEVANT DATA WERE AVAILABLE** | **COMMENTS** |
|---|---|
| If no recent relevant data are available for this indicator, why not? | N/A |
| What concrete actions are now being undertaken to collected and report these data as soon as possible? | N/A |
| When will data be reported? | N/A |

| **SUMMARY** | **COMMENTS** |
|---|---|
| Based on the assessment relative to the five standards, what is the overall conclusion regarding the quality of the data? | On the whole the data quality is adequate for the purposes of performance evaluation. |
| Significance of limitations (if any): | Source data is provided by KEK. Despite the thorough examination by the implementing partner some data may not be 100% accurate. |
| Actions needed to address limitations (given level of USAID control over data): | Implement the program developed by USAID implementing partners |

## 6.3 DQA FOR LEVEL OF TECHNICAL LOSSES

| **USAID/Kosovo**<br>**Data Quality Assessment Form** | |
|---|---|
| **Objective:** | Economic Growth |
| **Area:** | Infrastructure |
| **Element:** | Modern Energy Services |
| Indicator Title: | Level of Technical Losses (TCL) |
| Is this a Standard or Custom Indicator? If standard make sure the title matches the title in the Indicator Handbooks. | Standard indicator |
| Data Source(s): | Energy Accounting Report, the Board of Directors Archive, Strategic Planning Department Archive. |
| USAID Control over Data: | Medium Implementing partner is data source however; USAID reviews data upon submission in the quarterly report |
| Partner or Contractor Who Provided the Data (if applicable) | PA Government Services Inc. |
| Year or Period for Which the Data Are Being Reported | FY10 |
| | |
| Data Assessment methodology | Regular reviews together with USAID implementing partners of comparability and consistency. |
| Date(s) of Assessment: | February 2010 |
| Assessment Team Members: | COTR and Chief of Party |
| *For Office Use Only*<br>Signatures of the Assessment team members | |

| **CATEGORY** | **YES** | **NO** | **COMMENTS** |
|---|---|---|---|
| **VALIDITY** | | | |
| Is there a direct relationship between the program activity and what is being measured? If not explain connection the result. | X | | The indicator is used by KEK to measure the efficiency of its energy accounting and the success if its efforts to fight electricity theft and corruption. It is an important gauge for |

| | | | |
|---|---|---|---|
| | | | the commercial viability of KEK. |
| Can the result be plausibly attributed to USG assistance? | X | | Since this USAID project supports KEK, this indicator is also a measure of the effectiveness of the support for the preparation of the Distribution Company for privatization and indicates the level of achievement of Objective 1 of the project. |
| Are the people collecting data qualified and properly supervised? | X | | The data is being collected by KEK employees and reported to KEK BOD. |
| Are steps taken to correct known data errors? | X | | USAID implementing partners developed a methodology for accounting and verification of the energy balance data, supervised the installation of check meters, developed and implemented district regulations to reorganize meter reading and improve data collection, recording, and reporting, performed frequent sample data checks, strengthened the internal audit function to enforce the new data collection and processing procedures. |
| Were known data collection problems appropriately assessed? | X | | USAID implementing partners prepared a program for further improvement of data quality which includes the installation of new meters, improvements to the information systems and technology, further strengthening of internal audit and creating of field enforcement units. |
| Are steps being taken to limit transcription error? | X | | |
| Are data quality problems clearly described in final reports? | X | | |
| **RELIABILITY** | | | |
| Is a consistent data collection process used from year to year, location to location, data source to data source? | X | | |
| Are there procedures in place for periodic review of data collection, maintenance and documented in writing? | X | | |
| Are data quality problems clearly described in final reports? | X | | |

| | | | |
|---|---|---|---|
| **TIMELINESS** | | | |
| Is a regularized schedule of data collection in place to meet program management needs? | X | | Data is collected on a monthly basis and reported quarterly. |
| Is data properly stored and readily available? | X | | All data is kept in KEK BOD Archive. A copy of the data is kept in the PA Archive of KEK Network and Supply Project. |
| **PRECISION** | | | |
| Is there a method for detecting duplicate data? | X | | Duplicate data is eliminated in the process of the preparation of the data reports. |
| Is there a method for detecting missing data? | X | | Missing data is readily detected in the process of preparation of the energy balance (missing data causes imbalances). |
| **INTEGRITY** | | | |
| Are there proper safeguards in place to prevent unauthorized changes to the data? | X | | Data back-ups are kept in the in the PA Archive of KEK Network and Supply Project. . |
| Is there a need for an independent review of results reported? | | X | No. |

| **IF NO RELEVANT DATA WERE AVAILABLE** | **COMMENTS** |
|---|---|
| If no recent relevant data are available for this indicator, why not? | N/A |
| What concrete actions are now being undertaken to collected and report these data as soon as possible? | N/A |
| When will data be reported? | N/A |

| **SUMMARY** | **COMMENTS** |
|---|---|
| Based on the assessment relative to the five standards, what is the overall conclusion regarding the quality of the data? | On the whole the data quality is adequate for the purposes of performance evaluation. |
| Significance of limitations (if any): | Source data is provided by KEK. Despite the thorough examination by the implementing partner some data may not be 100% accurate. |
| Actions needed to address limitations (given level of USAID control over data): | Implement the program developed by USAID implementing partners |

## 6.4 DQA FOR THE RATIO OF ENERGY BILLED VERSUS ENERGY AVAILABLE FOR SALE

| **USAID/Kosovo**<br>**Data Quality Assessment Form** | |
|---|---|
| **Objective:** | Economic Growth |
| **Area:** | Infrastructure |
| **Element:** | Modern Energy Services |
| Indicator Title: | The ratio of energy billed versus energy available for sale |
| Is this a Standard or Custom Indicator? If standard make sure the title matches the title in the Indicator Handbooks. | Custom indicator |
| Data Source(s): | Energy Accounting Report, the Board of Directors Archive, Strategic Planning Department Archive. |
| USAID Control over Data: | Medium Implementing partner is data source however; USAID reviews data upon submission in the quarterly report |
| Partner or Contractor Who Provided the Data (if applicable) | PA Government Services Inc. |
| Year or Period for Which the Data Are Being Reported | FY10 |
| | |
| Data Assessment methodology | Regular reviews together with USAID implementing partners of comparability and consistency. |
| Date(s) of Assessment: | February 2010 |
| Assessment Team Members: | COTR and Chief of Party |
| *For Office Use Only*<br>Signatures of the Assessment team members | |

| **CATEGORY** | **YES** | **NO** | **COMMENTS** |
|---|---|---|---|
| **VALIDITY** | | | |
| Is there a direct relationship between the program activity and what is being measured? If not explain connection the result. | X | | The indicator is used by KEK to measure the efficiency of its energy accounting and the success if its efforts to fight electricity theft and corruption. It is an important gauge for |

| | | | |
|---|---|---|---|
| | | | the commercial viability of KEK. |
| Can the result be plausibly attributed to USG assistance? | X | | Since this USAID project supports KEK, this indicator is also a measure of the effectiveness of the support for the preparation of the Distribution Company for privatization and indicates the level of achievement of Objective 1 of the project. |
| Are the people collecting data qualified and properly supervised? | X | | The data is being collected by KEK employees and reported to KEK BOD. |
| Are steps taken to correct known data errors? | X | | USAID implementing partners developed a methodology for accounting and verification of the energy balance data, supervised the installation of check meters, developed and implemented district regulations to reorganize meter reading and improve data collection, recording, and reporting, performed frequent sample data checks, strengthened the internal audit function to enforce the new data collection and processing procedures. |
| Were known data collection problems appropriately assessed? | X | | USAID implementing partners prepared a program for further improvement of data quality which includes the installation of new meters, improvements to the information systems and technology, further strengthening of internal audit and creating of field enforcement units. |
| Are steps being taken to limit transcription error? | X | | |
| Are data quality problems clearly described in final reports? | X | | |
| **RELIABILITY** | | | |
| Is a consistent data collection process used from year to year, location to location, data source to data source? | X | | |
| Are there procedures in place for periodic review of data collection, maintenance and documented in writing? | X | | |
| Are data quality problems clearly described in final reports? | X | | |

| | | | |
|---|---|---|---|
| **TIMELINESS** | | | |
| Is a regularized schedule of data collection in place to meet program management needs? | X | | Data is collected on a monthly basis and reported quarterly. |
| Is data properly stored and readily available? | X | | All data is kept in KEK BOD Archive. A copy of the data is kept in the PA Archive of KEK Network and Supply Project. |
| **PRECISION** | | | |
| Is there a method for detecting duplicate data? | X | | Duplicate data is eliminated in the process of the preparation of the data reports. |
| Is there a method for detecting missing data? | X | | Missing data is readily detected in the process of preparation of the energy balance (missing data causes imbalances). |
| **INTEGRITY** | | | |
| Are there proper safeguards in place to prevent unauthorized changes to the data? | X | | Data back-ups are kept in the in the PA Archive of KEK Network and Supply Project. . |
| Is there a need for an independent review of results reported? | | X | No. |

| **IF NO RELEVANT DATA WERE AVAILABLE** | **COMMENTS** |
|---|---|
| If no recent relevant data are available for this indicator, why not? | N/A |
| What concrete actions are now being undertaken to collected and report these data as soon as possible? | N/A |
| When will data be reported? | N/A |

| **SUMMARY** | **COMMENTS** |
|---|---|
| Based on the assessment relative to the five standards, what is the overall conclusion regarding the quality of the data? | On the whole the data quality is adequate for the purposes of performance evaluation. |
| Significance of limitations (if any): | Source data is provided by KEK. Despite the thorough examination by the implementing partner some data may not be 100% accurate. |
| Actions needed to address limitations (given level of USAID control over data): | Implement the program developed by USAID implementing partners |

## 6.5 DQA FOR THE RATIO OF REVENUE COLLECTED VERSUS REVENUE BILLED

| **USAID/Kosovo**<br>**Data Quality Assessment Form** | |
|---|---|
| **Objective:** | Economic Growth |
| **Area:** | Infrastructure |
| **Element:** | Modern Energy Services |
| Indicator Title: | Ratio of revenue collected versus revenue billed |
| Is this a Standard or Custom Indicator? If standard make sure the title matches the title in the Indicator Handbooks. | Custom indicator |
| Data Source(s): | Energy Accounting Report, the Board of Directors Archive, Strategic Planning Department Archive. |
| USAID Control over Data: | Medium Implementing partner is data source however; USAID reviews data upon submission in the quarterly report |
| Partner or Contractor Who Provided the Data (if applicable) | PA Government Services Inc. |
| Year or Period for Which the Data Are Being Reported | FY10 |
| | |
| Data Assessment methodology | Regular reviews together with USAID implementing partners of comparability and consistency. |
| Date(s) of Assessment: | February 2010 |
| Assessment Team Members: | COTR and Chief of Party |
| *For Office Use Only*<br>Signatures of the Assessment team members | |

| **CATEGORY** | **YES** | **NO** | **COMMENTS** |
|---|---|---|---|
| **VALIDITY** | | | |
| Is there a direct relationship between the program activity and what is being measured? If not explain connection the result. | X | | The indicator is used by KEK to measure the efficiency of its energy accounting and the success if its efforts to fight electricity theft and |

| | | | |
|---|---|---|---|
| | | | corruption. It is an important gauge for the commercial viability of KEK. |
| Can the result be plausibly attributed to USG assistance? | X | | Since this USAID project supports KEK, this indicator is also a measure of the effectiveness of the support for the preparation of the Distribution Company for privatization and indicates the level of achievement of Objective 1 of the project. |
| Are the people collecting data qualified and properly supervised? | X | | The data is being collected by KEK employees and reported to KEK BOD. |
| Are steps taken to correct known data errors? | X | | USAID implementing partners developed a methodology for accounting and verification of the energy balance data, supervised the installation of check meters, developed and implemented district regulations to reorganize meter reading and improve data collection, recording, and reporting, performed frequent sample data checks, strengthened the internal audit function to enforce the new data collection and processing procedures. |
| Were known data collection problems appropriately assessed? | X | | USAID implementing partners prepared a program for further improvement of data quality which includes the installation of new meters, improvements to the information systems and technology, further strengthening of internal audit and creating of field enforcement units. |
| Are steps being taken to limit transcription error? | X | | |
| Are data quality problems clearly described in final reports? | X | | |
| **RELIABILITY** | | | |
| Is a consistent data collection process used from year to year, location to location, data source to data source? | X | | |
| Are there procedures in place for periodic review of data collection, maintenance and documented in writing? | X | | |
| Are data quality problems clearly described in final reports? | X | | |

| | | | |
|---|---|---|---|
| **TIMELINESS** | | | |
| Is a regularized schedule of data collection in place to meet program management needs? | X | | Data is collected on a monthly basis and reported quarterly. |
| Is data properly stored and readily available? | X | | All data is kept in KEK BOD Archive. A copy of the data is kept in the PA Archive of KEK Network and Supply Project. |
| **PRECISION** | | | |
| Is there a method for detecting duplicate data? | X | | Duplicate data is eliminated in the process of the preparation of the data reports. |
| Is there a method for detecting missing data? | X | | Missing data is readily detected in the process of preparation of the energy balance (missing data causes imbalances). |
| **INTEGRITY** | | | |
| Are there proper safeguards in place to prevent unauthorized changes to the data? | X | | Data back-ups are kept in the in the PA Archive of KEK Network and Supply Project. . |
| Is there a need for an independent review of results reported? | | X | No. |

| **IF NO RELEVANT DATA WERE AVAILABLE** | **COMMENTS** |
|---|---|
| If no recent relevant data are available for this indicator, why not? | N/A |
| What concrete actions are now being undertaken to collected and report these data as soon as possible? | N/A |
| When will data be reported? | N/A |

| **SUMMARY** | **COMMENTS** |
|---|---|
| Based on the assessment relative to the five standards, what is the overall conclusion regarding the quality of the data? | On the whole the data quality is adequate for the purposes of performance evaluation. |
| Significance of limitations (if any): | Source data is provided by KEK. Despite the thorough examination by the implementing partner some data may not be 100% accurate. |
| Actions needed to address limitations (given level of USAID control over data): | Implement the program developed by USAID implementing partners |

## 6.6 DQA FOR REVENUE COLLECTED AS A PERCENTAGE OF THE VALUE OF ENERGY AVAILABLE FOR SALE

| **USAID/Kosovo**<br>**Data Quality Assessment Form** | |
|---|---|
| **Objective:** | Economic Growth |
| **Area:** | Infrastructure |
| **Element:** | Modern Energy Services |
| Indicator Title: | Ratio of revenue collected as a percentage of the value of energy available for sale |
| Is this a Standard or Custom Indicator? If standard make sure the title matches the title in the Indicator Handbooks. | Custom indicator |
| Data Source(s): | Energy Accounting Report, the Board of Directors Archive, Strategic Planning Department Archive. |
| USAID Control over Data: | Medium Implementing partner is data source however; USAID reviews data upon submission in the quarterly report |
| Partner or Contractor Who Provided the Data (if applicable) | PA Government Services Inc. |
| Year or Period for Which the Data Are Being Reported | FY10 |
| | |
| Data Assessment methodology | Regular reviews together with USAID implementing partners of comparability and consistency. |
| Date(s) of Assessment: | February 2010 |
| Assessment Team Members: | COTR and Chief of Party |
| *For Office Use Only*<br>Signatures of the Assessment team members | |

| **CATEGORY** | **YES** | **NO** | **COMMENTS** |
|---|---|---|---|
| **VALIDITY** | | | |
| Is there a direct relationship between the program activity and what is being measured? If not explain connection the result. | X | | The indicator is used by KEK to measure the efficiency of its energy accounting and the success if its efforts to fight electricity theft and |

| | | | |
|---|---|---|---|
| | | | corruption. It is an important gauge for the commercial viability of KEK. |
| Can the result be plausibly attributed to USG assistance? | X | | Since this USAID project supports KEK, this indicator is also a measure of the effectiveness of the support for the preparation of the Distribution Company for privatization and indicates the level of achievement of Objective 1 of the project. |
| Are the people collecting data qualified and properly supervised? | X | | The data is being collected by KEK employees and reported to KEK BOD. |
| Are steps taken to correct known data errors? | X | | USAID implementing partners developed a methodology for accounting and verification of the energy balance data, supervised the installation of check meters, developed and implemented district regulations to reorganize meter reading and improve data collection, recording, and reporting, performed frequent sample data checks, strengthened the internal audit function to enforce the new data collection and processing procedures. |
| Were known data collection problems appropriately assessed? | X | | USAID implementing partners prepared a program for further improvement of data quality which includes the installation of new meters, improvements to the information systems and technology, further strengthening of internal audit and creating of field enforcement units. |
| Are steps being taken to limit transcription error? | X | | |
| Are data quality problems clearly described in final reports? | X | | |
| **RELIABILITY** | | | |
| Is a consistent data collection process used from year to year, location to location, data source to data source? | X | | |
| Are there procedures in place for periodic review of data collection, maintenance and documented in writing? | X | | |
| Are data quality problems clearly described in final reports? | X | | |

| | | | |
|---|---|---|---|
| **TIMELINESS** | | | |
| Is a regularized schedule of data collection in place to meet program management needs? | X | | Data is collected on a monthly basis and reported quarterly. |
| Is data properly stored and readily available? | X | | All data is kept in KEK BOD Archive. A copy of the data is kept in the PA Archive of KEK Network and Supply Project. |
| **PRECISION** | | | |
| Is there a method for detecting duplicate data? | X | | Duplicate data is eliminated in the process of the preparation of the data reports. |
| Is there a method for detecting missing data? | X | | Missing data is readily detected in the process of preparation of the energy balance (missing data causes imbalances). |
| **INTEGRITY** | | | |
| Are there proper safeguards in place to prevent unauthorized changes to the data? | X | | Data back-ups are kept in the in the PA Archive of KEK Network and Supply Project. . |
| Is there a need for an independent review of results reported? | | X | No. |

| **IF NO RELEVANT DATA WERE AVAILABLE** | **COMMENTS** |
|---|---|
| If no recent relevant data are available for this indicator, why not? | N/A |
| What concrete actions are now being undertaken to collected and report these data as soon as possible? | N/A |
| When will data be reported? | N/A |

| **SUMMARY** | **COMMENTS** |
|---|---|
| Based on the assessment relative to the five standards, what is the overall conclusion regarding the quality of the data? | On the whole the data quality is adequate for the purposes of performance evaluation. |
| Significance of limitations (if any): | Source data is provided by KEK. Despite the thorough examination by the implementing partner some data may not be 100% accurate. |
| Actions needed to address limitations (given level of USAID control over data): | Implement the program developed by USAID implementing partners |

## 6.7 DQA FOR REVENUE COLLECTED IN EUROS

| **USAID/Kosovo**<br>**Data Quality Assessment Form** | |
|---|---|
| **Objective:** | Economic Growth |
| **Area:** | Infrastructure |
| **Element:** | Modern Energy Services |
| Indicator Title: | Revenue collected in Euros |
| Is this a Standard or Custom Indicator? If standard make sure the title matches the title in the Indicator Handbooks. | Custom indicator |
| Data Source(s): | Energy Accounting Report, the Board of Directors Archive, Strategic Planning Department Archive. |
| USAID Control over Data: | Medium Implementing partner is data source however; USAID reviews data upon submission in the quarterly report |
| Partner or Contractor Who Provided the Data (if applicable) | PA Government Services Inc. |
| Year or Period for Which the Data Are Being Reported | FY10 |
| | |
| Data Assessment methodology | Regular reviews together with USAID implementing partners of comparability and consistency. |
| Date(s) of Assessment: | February 2010 |
| Assessment Team Members: | COTR and Chief of Party |
| *For Office Use Only*<br>Signatures of the Assessment team members | |

| **CATEGORY** | **YES** | **NO** | **COMMENTS** |
|---|---|---|---|
| **VALIDITY** | | | |
| Is there a direct relationship between the program activity and what is being measured? If not explain connection the result. | X | | The indicator is used by KEK to measure the efficiency of its energy accounting and the success if its efforts to fight electricity theft and corruption. It is an important gauge for |

| | | | |
|---|---|---|---|
| | | | the commercial viability of KEK. |
| Can the result be plausibly attributed to USG assistance? | X | | Since this USAID project supports KEK, this indicator is also a measure of the effectiveness of the support for the preparation of the Distribution Company for privatization and indicates the level of achievement of Objective 1 of the project. |
| Are the people collecting data qualified and properly supervised? | X | | The data is being collected by KEK employees and reported to KEK BOD. |
| Are steps taken to correct known data errors? | X | | USAID implementing partners developed a methodology for accounting and verification of the energy balance data, supervised the installation of check meters, developed and implemented district regulations to reorganize meter reading and improve data collection, recording, and reporting, performed frequent sample data checks, strengthened the internal audit function to enforce the new data collection and processing procedures. |
| Were known data collection problems appropriately assessed? | X | | USAID implementing partners prepared a program for further improvement of data quality which includes the installation of new meters, improvements to the information systems and technology, further strengthening of internal audit and creating of field enforcement units. |
| Are steps being taken to limit transcription error? | X | | |
| Are data quality problems clearly described in final reports? | X | | |
| **RELIABILITY** | | | |
| Is a consistent data collection process used from year to year, location to location, data source to data source? | X | | |
| Are there procedures in place for periodic review of data collection, maintenance and documented in writing? | X | | |
| Are data quality problems clearly described in final reports? | X | | |

| | | | |
|---|---|---|---|
| **TIMELINESS** | | | |
| Is a regularized schedule of data collection in place to meet program management needs? | X | | Data is collected on a monthly basis and reported quarterly. |
| Is data properly stored and readily available? | X | | All data is kept in KEK BOD Archive. A copy of the data is kept in the PA Archive of KEK Network and Supply Project. |
| **PRECISION** | | | |
| Is there a method for detecting duplicate data? | X | | Duplicate data is eliminated in the process of the preparation of the data reports. |
| Is there a method for detecting missing data? | X | | Missing data is readily detected in the process of preparation of the energy balance (missing data causes imbalances). |
| **INTEGRITY** | | | |
| Are there proper safeguards in place to prevent unauthorized changes to the data? | X | | Data back-ups are kept in the in the PA Archive of KEK Network and Supply Project. . |
| Is there a need for an independent review of results reported? | | X | No. |
| **IF NO RELEVANT DATA WERE AVAILABLE** | **COMMENTS** | | |
| If no recent relevant data are available for this indicator, why not? | N/A | | |
| What concrete actions are now being undertaken to collected and report these data as soon as possible? | N/A | | |
| When will data be reported? | N/A | | |
| **SUMMARY** | **COMMENTS** | | |
| Based on the assessment relative to the five standards, what is the overall conclusion regarding the quality of the data? | On the whole the data quality is adequate for the purposes of performance evaluation. | | |
| Significance of limitations (if any): | Source data is provided by KEK. Despite the thorough examination by the implementing partner some data may not be 100% accurate. | | |
| Actions needed to address limitations (given level of USAID control over data): | Implement the program developed by USAID implementing partners | | |

## 6.8 DQA FOR NUMBER OF PEOPLE WHO RECEIVED TRAINING IN TECHNICAL ENERGY FIELD

| **USAID/Kosovo**<br>**Data Quality Assessment Form** | |
|---|---|
| **Objective:** | Economic Growth |
| **Area:** | Infrastructure |
| **Element:** | Modern Energy Services |
| Indicator Title: | Number of people receiving USG supported training in technical energy fields |
| Is this a Standard or Custom Indicator? If standard make sure the title matches the title in the Indicator Handbooks. | Standard indicator |
| Data Source(s): | Implementing partner reports |
| USAID Control over Data: | Medium — Implementing partner is data source however; USAID reviews data upon submission in the quarterly report |
| Partner or Contractor Who Provided the Data (if applicable) | PA Government Services Inc. |
| Year or Period for Which the Data Are Being Reported | FY10 |
| Data Assessment methodology | Reviews of training records |
| Date(s) of Assessment: | February 2010 |
| Assessment Team Members: | PA Chief of Party or Admin DCOP, and COTR |

*For Office Use Only*

Signatures of the Assessment team members

| **CATEGORY** | **YES** | **NO** | **COMMENTS** |
|---|---|---|---|
| **VALIDITY** | | | |
| Is there a direct relationship between the program activity and what is being measured? If not explain connection the result. | X | | The indicator adequately reflects the final outcome of the activity. The purpose of the activity is to train persons. |
| Can the result be plausibly attributed to USG assistance? | X | | Yes. USG has paid for the trainers who have conducted the training. |

| | | | |
|---|---|---|---|
| Are the people collecting data qualified and properly supervised? | X | | The data is being collected by the trainers directly. |
| Are steps taken to correct known data errors? | | X | No known errors exist. |
| Were known data collection problems appropriately assessed? | | X | There are no problems |
| Are steps being taken to limit transcription error? | X | | Yes, data is recorded by trainers as soon as the training is completed. |
| Are data quality problems clearly described in final reports? | | X | Not applicable; the data represents the actual persons trained. |
| **RELIABILITY** | | | |
| Is a consistent data collection process used from year to year, location to location, data source to data source? | X | | Number of persons trained is collected with the same methodology every year. |
| Are there procedures in place for periodic review of data collection, maintenance and documented in writing? | X | | Admin DCOP reviews data on a quarterly basis when it is being integrated to the quarterly report. |
| Are data quality problems clearly described in final reports? | | X | Not applicable; there have been no data quality problems. |
| **TIMELINESS** | | | |
| Is a regularized schedule of data collection in place to meet program management needs? | X | | Data is collected after each training event and verified every quarterly. |
| Is data properly stored and readily available? | X | | All data is kept in the office of the PA KEK Network and Supply Project Administrative Manager. |
| **PRECISION** | | | |
| Is there a method for detecting duplicate data? | | X | It is unnecessary as it is evident from the list of persons trained if there is duplication. |
| Is there a method for detecting missing data? | | X | The data is prepared by the trainers so there will be no missing data. |
| **INTEGRITY** | | | |
| Are there proper safeguards in place to prevent unauthorized changes to the data? | X | | Data is collected and tracked by Admin DCOP and stored both in electronic and hard copies which prevents any changes. |
| Is there a need for an independent review of results reported? | | X | No. |
| **IF NO RELEVANT DATA WERE AVAILABLE** | **COMMENTS** | | |
| If no recent relevant data are available for this indicator, why not? | N/A | | |

| | |
|---|---|
| What concrete actions are now being undertaken to collected and report these data as soon as possible? | N/A |
| When will data be reported? | N/A |
| **SUMMARY** | **COMMENTS** |
| Based on the assessment relative to the five standards, what is the overall conclusion regarding the quality of the data? | The data is easily collected and measured. |
| Significance of limitations (if any): | None. |
| Actions needed to address limitations (given level of USAID control over data): | N/A |

## 6.9 DQA FOR NUMBER OF PEOPLE WHO RECEIVED TRAINING IN ENERGY RELATED BUSINESS MANAGEMENT FIELD

| **USAID/Kosovo**<br>**Data Quality Assessment Form** | |
|---|---|
| **Objective:** | Economic Growth |
| **Area:** | Infrastructure |
| **Element:** | Modern Energy Services |
| Indicator Title: | Number of people receiving USG supported in energy related business management systems |
| Is this a Standard or Custom Indicator? If standard make sure the title matches the title in the Indicator Handbooks. | Standard indicator |
| Data Source(s): | Implementing partner reports |
| USAID Control over Data: | Medium — Implementing partner is data source however; USAID reviews data upon submission in the quarterly report |
| Partner or Contractor Who Provided the Data (if applicable) | PA Government Services Inc. |
| Year or Period for Which the Data Are Being Reported | FY10 |
| | |
| Data Assessment methodology | Reviews of training records |
| Date(s) of Assessment: | February 2010 |
| Assessment Team Members: | PA Chief of Party, Admin DCOP, and COTR |
| *For Office Use Only*<br>Signatures of the Assessment team members | |

| **CATEGORY** | **YES** | **NO** | **COMMENTS** |
|---|---|---|---|
| **VALIDITY** | | | |
| Is there a direct relationship between the program activity and what is being measured? If not explain connection the result. | X | | The indicator adequately reflects the final outcome of the activity. The purpose of the activity is to train persons. |
| Can the result be plausibly attributed | X | | Yes. USG has paid for the trainers who |

| | | | |
|---|---|---|---|
| to USG assistance? | | | have conducted the training. |
| Are the people collecting data qualified and properly supervised? | X | | The data is being collected by the trainers directly. |
| Are steps taken to correct known data errors? | | X | No known errors exist. |
| Were known data collection problems appropriately assessed? | | X | There are no problems |
| Are steps being taken to limit transcription error? | X | | Yes, data is recorded by trainers as soon as the training is completed. |
| Are data quality problems clearly described in final reports? | | X | Not applicable; the data represents the actual persons trained. |
| **RELIABILITY** | | | |
| Is a consistent data collection process used from year to year, location to location, data source to data source? | X | | Number of persons trained is collected with the same methodology every year. |
| Are there procedures in place for periodic review of data collection, maintenance and documented in writing? | X | | Admin DCOP reviews data on a quarterly basis when it is being integrated to the quarterly report. |
| Are data quality problems clearly described in final reports? | | X | Not applicable; there have been no data quality problems. |
| **TIMELINESS** | | | |
| Is a regularized schedule of data collection in place to meet program management needs? | X | | Data is collected after each training event and verified every quarterly. |
| Is data properly stored and readily available? | X | | All data is kept in the office of the PA KEK Network and Supply Project Administrative Manager. |
| **PRECISION** | | | |
| Is there a method for detecting duplicate data? | | X | It is unnecessary as it is evident from the list of persons trained if there is duplication. |
| Is there a method for detecting missing data? | | X | The data is prepared by the trainers so there will be no missing data. |
| **INTEGRITY** | | | |
| Are there proper safeguards in place to prevent unauthorized changes to the data? | X | | Data is collected and tracked by Admin DCOP and stored both in electronic and hard copies which prevents any changes. |
| Is there a need for an independent review of results reported? | | X | No. |
| **IF NO RELEVANT DATA WERE AVAILABLE** | **COMMENTS** | | |
| If no recent relevant data are | N/A | | |

| | |
|---|---|
| available for this indicator, why not? | |
| What concrete actions are now being undertaken to collected and report these data as soon as possible? | N/A |
| When will data be reported? | N/A |
| **SUMMARY** | **COMMENTS** |
| Based on the assessment relative to the five standards, what is the overall conclusion regarding the quality of the data? | The data is easily collected and measured. |
| Significance of limitations (if any): | None. |
| Actions needed to address limitations (given level of USAID control over data): | N/A |

# APPENDIX A: UN-SERVED DEMAND REPORT

**TABLE 1. Actual FY 2008 (October 2007 - September 2008)**

| | 2007 | | | 2008 | | | | | | | | | USAID Fiscal Year PUD | |
|---|---|---|---|---|---|---|---|---|---|---|---|---|---|---|
| [MWh] | 10 | 11 | 12 | 1 | 2 | 3 | 4 | 5 | 6 | 7 | 8 | 9 | | |
| Served demand (Gross Consumption) | 388,862 | 467,904 | 522,047 | 523,803 | 459,772 | 452,343 | 395,009 | 353,191 | 294,128 | 318,943 | 321,106 | 379,584 | SubTot. | 4,876,692 |
| Un-served denad (Load shedding) | 59,015 | 74,761 | 126,784 | 134,529 | 93,087 | 58,668 | 49,117 | 45,878 | 64,010 | 33,903 | 70,233 | 30,421 | SubTot. | 840,406 |
| | | | 1,378,813 | | | 1,435,918 | | | 1,042,328 | | | 1,019,633 | | |
| | | | 260,560 | | | 286,284 | | | 159,005 | | | 134,557 | | |
| Quartrely PUD | | | 15.89% | | | 16.62% | | | 13.24% | | | 11.66% | | |
| | | | | | | | | | | | PUD = UD / (UD + SD) * 100% | | | 14.70% |

| Calendar Year PUD |
|---|
| Q1+Q2+Q3+Q4 2008 |
| 4,922,366 |
| 724,855 |
| **12.84%** |

**TABLE 2. Actual FY 2009 (October 2008 - September 2009)**

| | 2008 | | | 2009 | | | | | | | | | USAID Fiscal Year PUD | |
|---|---|---|---|---|---|---|---|---|---|---|---|---|---|---|
| [MWh] | 10 | 11 | 12 | 1 | 2 | 3 | 4 | 5 | 6 | 7 | 8 | 9 | | |
| Served demand (Gross Consumption) | 424,452 | 461,502 | 538,533 | 575,293 | 522,811 | 526,077 | 386,131 | 351,686 | 321,742 | 352,011 | 369,665 | 352,296 | SubTot. | 5,182,199 |
| Un-served denad (Load shedding) | 43,814 | 45,297 | 55,898 | 74,681 | 35,229 | 46,737 | 34,202 | 24,363 | 23,923 | 35,292 | 40,192 | 24,410 | SubTot. | 484,038 |
| | | | 1,424,487 | | | 1,624,181 | | | 1,059,559 | | | 1,073,972 | | |
| | | | 145,009 | | | 156,647 | | | 82,488 | | | 99,894 | | |
| Quartrely PUD | | | 9.24% | | | 8.80% | | | 7.22% | | | 8.51% | | |
| | | | | | | | | | | | PUD = UD / (UD + SD) * 100% | | | 8.54% |

| Calendar Year PUD |
|---|
| Q1+Q2+Q3+Q4 2009 |
| 5,280,788 |
| 389,202 |
| **6.86%** |

**TABLE 3. Actual FY 2010 (October 2009 - September 2010)**

| | 2009 | | | 2010 | | | | | | | | | USAID Fiscal Year PUD | |
|---|---|---|---|---|---|---|---|---|---|---|---|---|---|---|
| [MWh] | 10 | 11 | 12 | 1 | 2 | 3 | 4 | 5 | 6 | 7 | 8 | 9 | | |
| Served demand (Gross Consumption) | 447,956 | 506,950 | 568,170 | | | | | | | | | | SubTot. | 1,523,076 |
| Un-served denad (Load shedding) | 22,184 | 22,184 | 5,805 | | | | | | | | | | SubTot. | 50,173 |
| | | | 1,523,076 | | | | | | | | | | | |
| | | | 50,173 | | | | | | | | | | | |
| Quartrely PUD | | | 3.19% | | | | | | | | | | | |
| | | | | | | | | | | | PUD = UD / (UD + SD) * 100% | | | 3.19% |

Unserved Demand is 3.19% in Q4 2009 compared to 9.24% in Q4 2008.

Table notes:

1) The data for above table are provided by the KEK Capacity Management Department.
2) Consumption is defined to be "Input to Distribution + Trepca + Newco FeronikeliProduction + Sharri + Kosova Thengjilli + TS Palaj&Bardhi Drenas + Self Consumption + Kosova A PP SS, note that these numbers will be different from the numbers for the "Input to Distriution TOTAL" from the Energy Accoutning Reports to the KEK Baord of Directors.
3) Consumpiton in the future is based on the energy forecast that KEK has already prepared as part of the KEK business plan process.
4) Data not available is indicated as "n/a" in the cell.
5) The data are arranged based on USAID Fiscal Year (that is FY 2009 starts on 1 October 2008 and ends on 30 September 2009)
6) The Consumed Energy includes the transmission losses of KOSTT (which are a little over 2%).

## ENERGY FLOWS - THROUGH TRANSMISSION
## YTD - December 2009
## (All flows in MWH)

### Flows Into KOSTT:

| | | |
|---|---|---|
| A&B Generation | | |
| Gross | 5,259,953 | R |
| Aux (on-site only) | 455,226 | R |
| Net | 4,804,727 | |
| Ujmani HPP | 88,186 | R |
| Kosova Coal | 0 | R |
| Interconnections In | 3,406,903 | R |
| Total In: | 8,299,816 | |

| | |
|---|---|
| ***PP Kosova A*** | |
| Gross | 1,621,950 |
| Aux (on | 176,672 |
| **PP Kosova B** | |
| Gross | 3,638,003 |
| Aux (on | 278,554 |
| Net Import (In-Out) | 477,365 |
| Losses (% of Flow In) | 178,522 |
| | 2.2% |

### Flows Out Of KOSTT:

| | | |
|---|---|---|
| Direct Customer | 544,042 | S |
| | 544,042 | |
| **Outsourced** | 0 | |
| To KEK from | 252,868 | N |
| Total | 252,868 | |
| **Customer on** | 0 | |
| **KOSTT** 52 mtrs @ 22 s/ | 4,394,846 | N |
| Interconnections Out | 2,929,538 | R |
| Total Out: | 8,121,294 | |

**ENERGY FLOWS - DSO including 220 an**
**YTD - December 2009**
**(All flows in MWH)**

**Flows In To KEK (Gross)**

| **Delivery From KOSTT** | | |
|---|---|---|
| Direct 220 110 kV Customers | 544,042 | *S |
| To KEK from substations Palaj, FN and PP Kos. A&B | 252,868 | N |
| Outsourced Units (Included in box/cell above) | 0 | |
| Customer on land of TPP Kosovo A and B (Included in box/cell above) | 0 | |
| KOSTT Delivery to 7 Districts | 4,394,846 | N |
| Total | 5,191,756 | |

| **Small HPP Connected in Distribution** | | |
|---|---|---|
| Lumbardh | 32,620 | N |
| Radavc | 586 | N |
| Total | 33,206 | |

| Total In to KEK (Gross) | 5,224,962 |
|---|---|

| **Flow Through non 110 kV** | |
|---|---|
| Delivery to Distribution | 4,647,714 |
| Small Hydro Inflow | 33,206 |
| Total | 4,680,919 |

| **Allocation of Losses** | N | |
|---|---|---|
| | MWH | Euro (000) |
| Technical Losses | | |
| 110 kV Xfrmer to 10 kV | 367,650 | 11,010 |
| 0.4 kV from ESTAP | 432,790 | 12,985 |
| **Total** | 800,439 | 23,995 |
| **(Calculation for this month)** | 17.1% | |
| Unaccounted for Energy Losses | 795,872 | 42,581 |
| (Energy component of commercial losses) | 17.0% | |
| Total | 1,596,312 | 66,576 |
| (% Flow Thru Non 110 kV) | 34.1% | |

**Average Wtd Trf 52.7 Euro / MWH from Jan. - March 09; 54**
**Cost of purcheased losses 31.3 (Euro / MWH)**

| **Losses Total** | 1,596,312 |
|---|---|

RESULTS BY DISTRICT

**YTD - December 2009**

**(Energy flows in MWH, Monetary amounts in 000 €)**

| | | | Energy Billed | | | Key Performance indicators | | | |
|---|---|---|---|---|---|---|---|---|---|
| | Input to Distribution | Technical Losses | Internal Cons. | Minorities Unbillable & Uncollectable | Energy Available For Sale (EAFS) | MWH | € (000) | Collections € (000) | Billed as % of EAFS | Collection As % of Billed | % Collected Versus EAFS | % Energy Accoun. Versus Input to DSO. |
| Responsible Area | N | N | S | N/S | Calculated | S | S | S | Calculated | Calculated | Calculated | Calculated |
| Prishtinë | 1,302,725 | 184,800 | 2,731 | 34,777 | 1,080,417 | 786,191 | 56,617 | 50,326 | 73% | 89% | 65% | 77% |
| Prizren | 733,736 | 159,803 | 233 | 2,461 | 571,239 | 451,974 | 31,060 | 25,296 | 79% | 81% | 64% | 84% |
| Pejë | 507,930 | 97,938 | 663 | 1,260 | 408,069 | 293,473 | 20,892 | 17,520 | 72% | 84% | 60% | 77% |
| Ferizaj | 562,733 | 109,308 | 258 | 34,656 | 418,512 | 319,191 | 22,676 | 16,260 | 76% | 72% | 55% | 82% |
| Gjilan | 391,691 | 62,046 | 681 | 20,662 | 308,302 | 265,606 | 17,893 | 13,681 | 86% | 76% | 66% | 89% |
| Mitrovicë | 649,063 | 136,688 | 535 | 232,764 | 279,077 | 203,943 | 14,310 | 8,824 | 73% | 62% | 45% | 88% |
| Gjakovë | 280,174 | 48,556 | 601 | 0 | 231,017 | 179,937 | 12,205 | 9,417 | 78% | 77% | 60% | 82% |
| Sub TOTAL | 4,428,053 | 799,139 | 5,702 | 326,579 | 3,296,634 | 2,500,315 | 175,653 | 141,324 | 76% | 80% | 61% | 82% |
| included in Peja District | 0 | | | | 0 | | | | | | | |
| Generation | 101,541 | 1,303 | 96,014 | 0 | 4,225 | 4,665 | 407 | 269 | 110% | 66% | 73% | 100% |
| Sub TOTAL | 4,529,594 | 800,441 | 101,716 | 326,579 | 3,300,859 | 2,504,980 | 176,060 | 141,593 | 76% | 80% | 61% | 82% |
| but not in CCP | 544,042 | 0 | 0 | 0 | 544,042 | 544,042 | 20,718 | 18,683 | 100% | 90% | 90% | 100% |
| TOTAL | 5,073,636 | 800,441 | 101,716 | 326,579 | 3,844,901 | 3,049,022 | 196,778 | 160,276 | 79.3% | 81.5% | 64.6% | 84.3% |

| Customer Billing | YTD - December 2009 | | | | | | | | | | | | |
|---|---|---|---|---|---|---|---|---|---|---|---|---|---|
| | Energy Billed | | | | Collection | | Customer Debt per month € (000') | | | | | | |
| | MWH | % | EURO | % | EURO | % | | | | | | | |
| Household | 1,749,512 | 57% | 107,930 | 55% | 80,782 | 50% | January | 346,503 | July | 359,404 | | | |
| Commercial | 476,012 | 16% | 46,896 | 24% | 44,991 | 28% | February | 351,653 | August | 361,008 | | | |
| Industrial & Others | 279,459 | 9% | 21,233 | 11% | 15,820 | 10% | March | 355,814 | September | 362,060 | | | |
| (3) Direct Customers | 544,042 | 18% | 20,718 | 11% | 18,682 | 12% | April | 356,198 | October | 366,982 | | | |
| Total | 3,049,025 | 100% | 196,777 | 100% | 160,275 | 100% | May | 356,893 | November | 373,793 | | | |
| | | | | | | | June | 358,575 | December | 376,098 | | | |

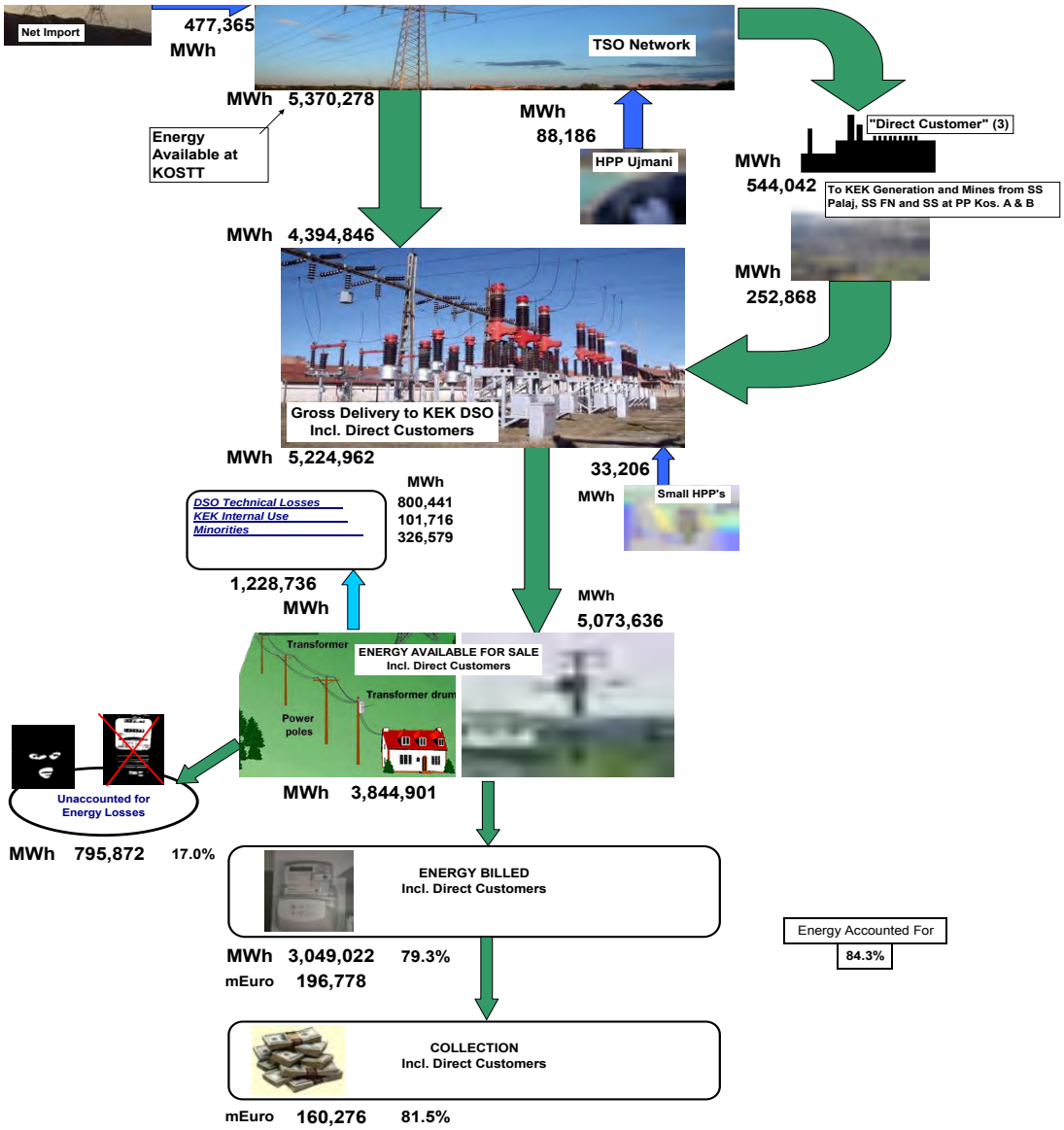
Net Import
477,365
MWh
TSO Network
MWh 5,370,278
Energy Available at KOSTT
MWh
88,186
HPP Ujmani
"Direct Customer" (3)
MWh
544,042
To KEK Generation and Mines from SS Palaj, SS FN and SS at PP Kos. A & B
MWh 4,394,846
MWh
252,868
Gross Delivery to KEK DSO
Incl. Direct Customers
MWh 5,224,962
33,206
MWh
Small HPP's
MWh
DSO Technical Losses 800,441
KEK Internal Use 101,716
Minorities 326,579
1,228,736
MWh
MWh
5,073,636
Transformer
ENERGY AVAILABLE FOR SALE
Incl. Direct Customers
Transformer drum
Power poles
Unaccounted for Energy Losses
MWh 3,844,901
MWh 795,872 17.0%
ENERGY BILLED
Incl. Direct Customers
Energy Accounted For
84.3%
MWh 3,049,022 79.3%
mEuro 196,778
COLLECTION
Incl. Direct Customers
mEuro 160,276 81.5%

## *APPENDIX C: TRAINING REPORT*

**The following are the details of the XX persons who received training in energy-related business management field during Quarter 1 of 2010.**

**Training Topic:** XXXXX
**Training Date:** XXXX
**Trainer:** XXXX
**Trainees**:

| No | Name | Gender |
|---|---|---|
| 1 | XXXXXX | M |
| 2 | XXXXXX | F |
| 3 | XXXXXX | F |
| 4 | XXXXXX | F |
| 5 | XXXXXX | F |
| 6 | XXXXXX | F |
| 7 | XXXXXX | F |
| 8 | XXXXXX | F |
| 9 | XXXXXX | F |