PD-ABU-452
112065

WEST PAKISTAN

WATER AND POWER DEVELOPMENT AUTHORITY

LAHORE, WEST PAKISTAN

PROJECT NO. 1
SALINITY CONTROL AND RECLAMATION PROJECT
(ELECTRIFICATION)

COMPLETION REPORT

MAY, 1964

RECEIVED
APR 7 1966
NESA/ENGR

MINER AND MINER INTERNATIONAL, INC.
(INCORPORATED IN U.S.A., LIABILITY OF MEMBERS IS LIMITED)
GREELEY, COLORADO LAHORE, WEST PAKISTAN

MINER AND MINER
INTERNATIONAL, INC.
910 27TH AVENUE
GREELEY, COLORADO

CABLE - MINER
TELEX - 303-352-9137

P. O. BOX 548
TELEPHONE 352-3706

May 27, 1964

Mr. Ghulam Ishaq, Chairman
West Pakistan Water and Power Development Authority
Sunny View, Kashmir Road
Lahore, West Pakistan

Subject: COMPLETION REPORT - PROJECT NO. 1
SALINITY CONTROL AND RECLAMATION (ELECTRIFICATION)
PROJECT
File: P1108

Dear Sir:

It is our pleasure to present the completion report for the Electrification of the Salinity Control and Reclamation Project No. 1.

This report has been prepared as required by the Engineering Services Agreement, and is intended to describe the Distribution system constructed to serve the 1,796 tubewells in the Project. This report is a brief supplement to the detailed reports and data already on file with the Authority and referred to herein.

We wish to express our appreciation to the Authority for the efforts of all WAPDA personnel involved in the completion of this nationally important Project. We wish the Authority every success in its continual fight against the menace of salinity and waterlogging conditions in Pakistan.

Sincerely,

MINER AND MINER INTERNATIONAL, INC.

Charles W. Meyers

Charles W. Meyers, P. E.
President

CWM/jd

TABLE OF CONTENTS

	Page
LETTER OF TRANSMITTAL	i
TABLE OF CONTENTS	ii
LOCATION MAP	iv
INTRODUCTION	
Background and Project Description	1
External Financing	2
Engineer's Operations	2
Construction Area Map	4
DESCRIPTION OF ELECTRICAL FACILITIES	
Transmission	5
Substations	7
Distribution	10
Photographs	12
DISBURSEMENT AND ACCOUNTING OF FUNDS	
Disbursement and Accounting of Funds	15
Budget Control Report	16
RECOMMENDATIONS	
Recommendations	17
APPENDIX	
Organization Chart	
Table I. Procurement of Materials and Supplies Under DLF Loan 25	
Table II. 11-kv Distribution Circuit Data By Substation	
Table III. Distribution Transformers Connected	
Table IV. Number of Tubewells By Scheme	
Table V. Pump Motors Connected	
Table VI. Summary of Line Miles By Material Source By Substation	

DRAWINGS

- Single Line Diagrams 66-kv System Sheets 1 and 2
- Single Line Diagrams 66/11-kv Substations
  - Chuharkana
  - Mohlan
  - Shahkot
  - Sheikhupura
  - Warburton
  - Hafizabad
  - Sukheki
  - Chiniot
  - Bucheke
- Circuit Diagrams - Tubewell Electrical Distribution
  - Layout, 11 kv, 3-Phase
    - Chuharkana
    - Mohlan
    - Shahkot
    - Sheikhupura
    - Warburton
    - Hafizabad
    - Sukheki
    - Chiniot
    - Bucheke

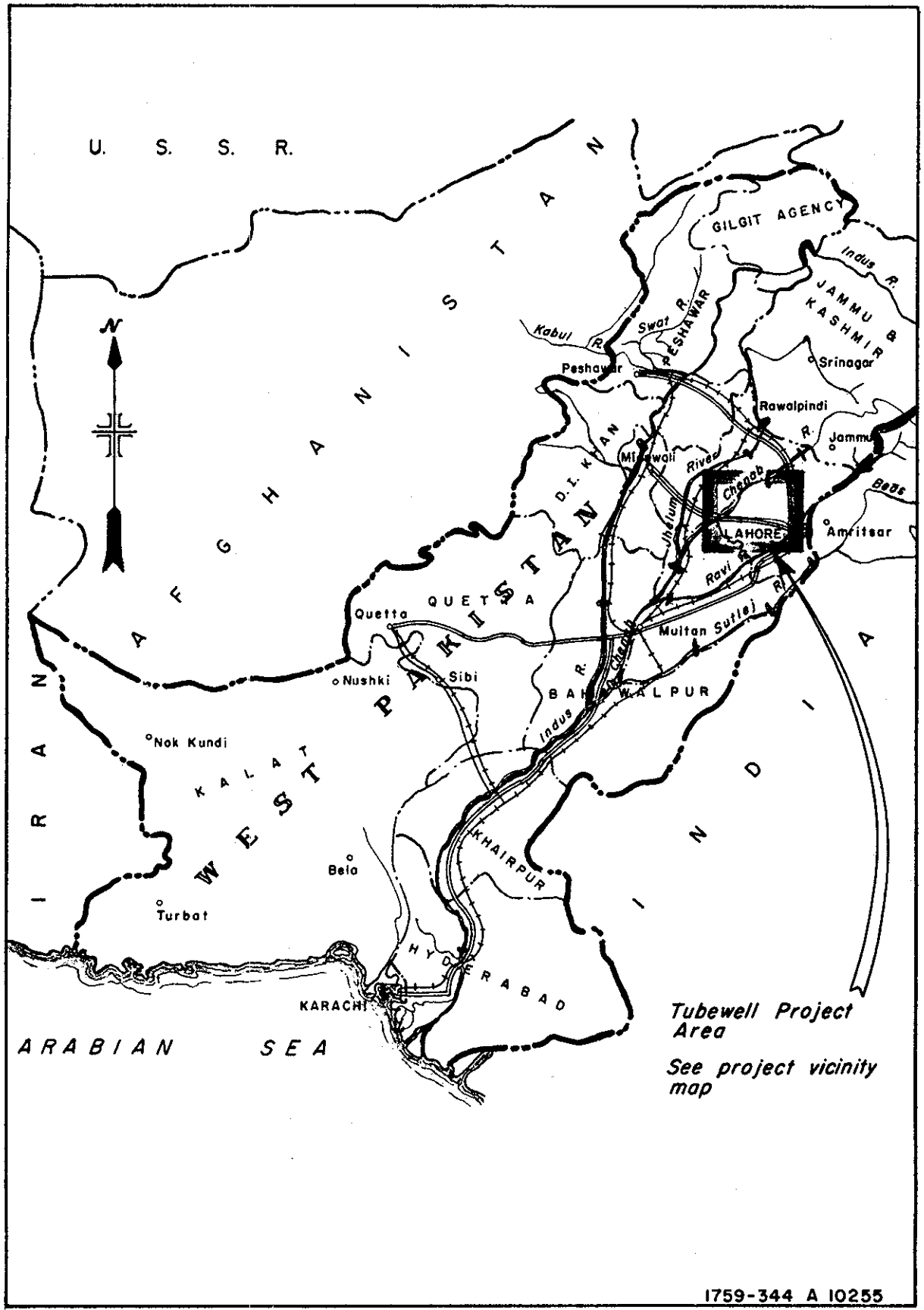

1759-344 A 10255

MINER AND MINER INTERNATIONAL INC.
MAY, 1963

LOCATION MAP

I N T R O D U C T I O N

Background and Project Description
External Financing
Engineer's Operation
Construction Area Map

√-

BACKGROUND AND PROJECT DESCRIPTION

In 1954, the Irrigation Branch of the Public Works Department with the assistance of the former International Cooperation Administration (ICA) initiated a comprehensive investigation of ground water, waterlogging, and salinity. From this investigation, the Salinity Control and Reclamation Project was conceived. In October of 1958, the West Pakistan Water and Power Development Authority was created and this project was placed under their direction.

An agreement was signed between the Authority and Tipton and Kalmbach, Inc., of Denver, Colorado for engineering services on Project No. One. Tipton and Kalmbach then engaged Miner and Miner International, Inc. of Greeley, Colorado to provide engineering services for the electrification phase of the project. This agreement was revised and a separate Engineering Services Contract was executed between Miner and Miner and the Water and Power Development Authority on June 23, 1959. This change in agreements occured when Miner and Miner was retained by WAPDA for services on the Secondary Transmission and Distribution Project.

This report concerns only the electrification portion of Project No. One which provided for the construction and electrification of 1,796 tubewells. These tubewells, being in the central portion of the Rechna Doab, command a culturable area of 1,026,017 acres. Refer to the Location Map on Page iv.

Originally 13 Reclamation Scheme Areas were included in Project No. One. This report, however, pertains only to the electrification of tubewells in eight of these Schemes. Four Schemes were accomplished by the Irrigation Department prior to 1959, and one Scheme was undertaken by the Authority through a barter agreement.

The eight Schemes are listed below and are shown on the Construction Area Map on Page 4.

Scheme 5	Shahkot	Scheme 9	Beranwala
Scheme 6	Zafarwal	Scheme 10	Harse Sheikh
Scheme 7	Khangan Dogran	Scheme 11	Hafizabad
Scheme 8	Sangla Hill	Scheme 12	Shadman

Bulk electrical energy to these Scheme Areas was made possible by the additions and changes to the West Pakistan Grid by the Primary and Secondary Transmission and Distribution Project. These power supply projects were under construction

simultaneously with Project No. One.

For additional background data pertaining to the drilling of wells and the installation of pumping equipment, refer to reports published by Tipton and Kalmbach, Inc.

EXTERNAL FINANCING

The Development Loan Fund (DLF) of Washington, D. C. granted a 15.2 million dollar loan toward foreign currency expenditures on equipment, materials, and services required for construction and electrification of the tubewells. The loan repayable over a 20 year period, at 3.5 per cent interest was restricted for expenditures in the "Free World" only. This loan was allocated to each facility within the Authority against their budget estimates.

Additional information on this loan may be found in the Loan Agreement, Development Loan Fund - Loan No. 25.

ENGINEER'S OPERATIONS

Miner and Miner coordinated the work on the electrical phase with Tipton and Kalmbach's work. The Project progress reports were published by Tipton and Kalmbach up to November of 1963, which included data for the power facilities. After that date, monthly progress reports were submitted directly by Miner and Miner.

Briefly, the Engineer performed the following in accordance with the Engineering Services Agreement:

1. Reviewed and submitted an appraisal of the proposed technical details of the Project.
2. Developed detailed plans and specifications for the purchase of materials and supplies for the construction of electrical facilities.
3. Assisted the Authority in the preparation of tenders, review of bids, and issue of contracts.
4. Assisted the Authority in administration of contracts by approval of drawings, inspection of works, and approval of invoices.
5. Established work order procedures for accounting and materials requirements.

6. Provided construction inspection and assistance to the Authority's forces for the construction of the 11-kv distribution lines.
7. Assisted the Authority in arranging for Dollar payments.
8. Assisted the Authority in the establishment of warehouses, a materials handling organization, and a material records and control procedure.
9. Utilized the services of Pakistani engineers, assigned to the Engineer by the Authority, to the maximum extent in order to leave trained personnel for the operation of the constructed facilities.

Miner and Miner's Organization Chart for performing the functions shown above will be found in the Appendix.

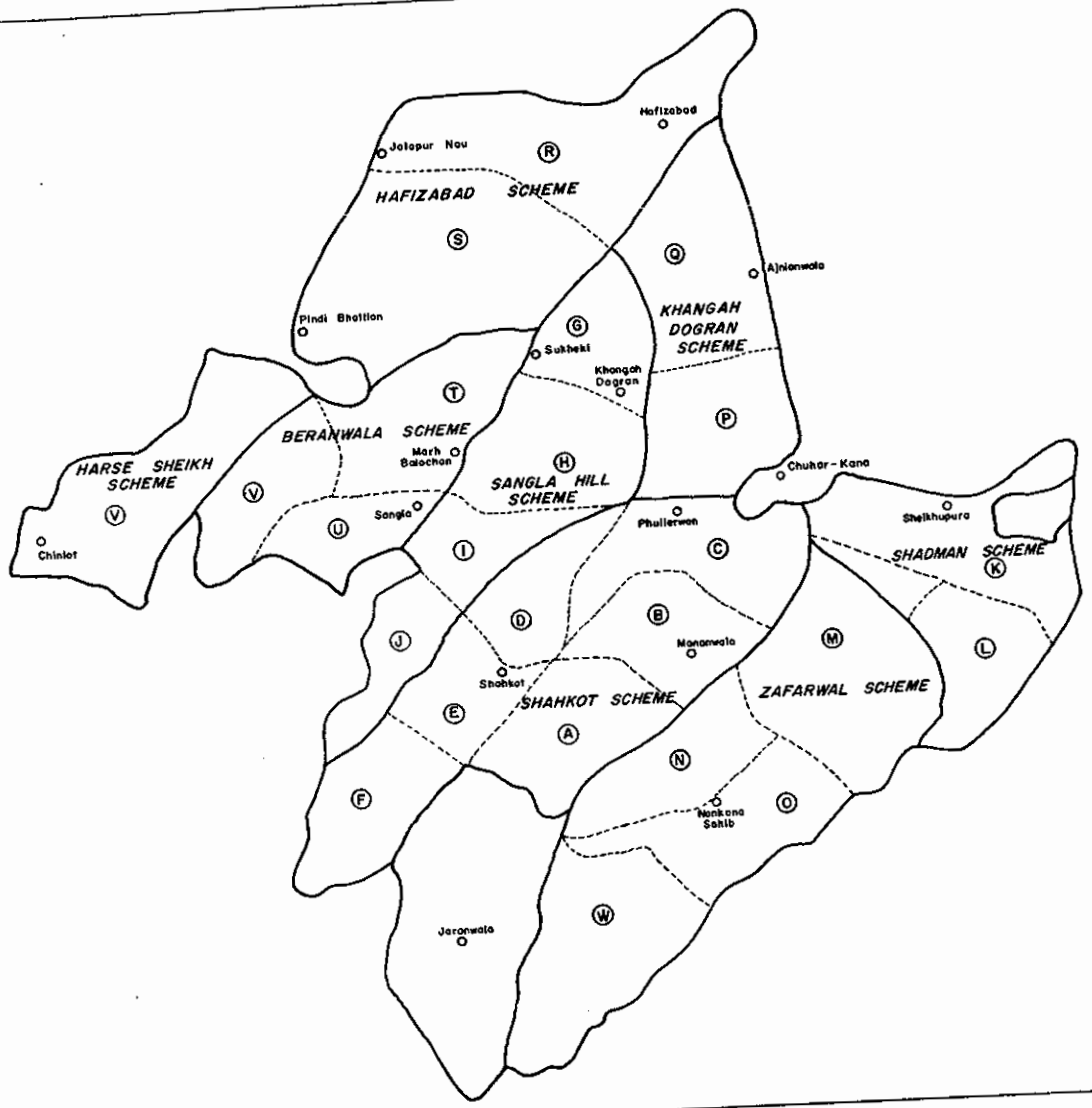

B 10273

CONSTRUCTION AREA MAP

4

AG
MINER AND MINER INTERNATIONAL INC.
MARCH 1964

DESCRIPTION OF ELECTRICAL FACILITIES

Transmission
Substations
- New Substations
- Renovated Substations
- Substation Area Key Map

Distribution

The discussion in this section is divided into three subsections - Transmission, Substations, and Distribution. The first two maps in the Appendix illustrate the 66-kv transmission system; the next eight maps show the four substations with metering and relaying accompanying each substation; the last eight drawings illustrate the 11-kv distribution system. Tables I thru VI in the Appendix provides additional criteria for this project.

In order to provide electrical energy to the tubewell pumps, it was necessary to extend the existing electrical system into the project area. Existing installations were utilized, where possible, and the extensions were designed to integrate into the system as a whole.

TRANSMISSION

The 66-kv transmission system was extended from the existing Nishatabad Substation through the new Shahkot Substation to the Warburton Substation. Switching was provided at the Warburton Substation to connect to the existing 66-kv Lyallpur Thermal Plant-Chichoki Mallian circuit.

The Lyallpur-Warburton transmission line was constructed by Societa Anonima Elettrificazione under Supply and Erection Contract C-25-11. Double circuit steel towers were utilized on this line with spans limited to 1,000 feet due to the waterlogged condition of the area. The conductor, ACSR "COYOTE", was selected on the basis of a 20-year load study. This conductor consists of 26 aluminum strands and 7 steel strands, which is equivalent to a copper conductor of 0.125 square inches, and has an ultimate strength of 10,240 pounds. The transmission line was provided with a steel overhead ground wire consisting of seven strands and having a minimum breaking strength of 11,500 pounds.

One circuit was installed from Nishatabad through the Shahkot Substation to Warburton, with provisions for a second circuit directly from Nishatabad to Warburton.

Fourteen miles of single circuit 66-kv transmission line was constructed from the existing Jaranwala Substation to the new Bucheke Substation. This line was constructed with ACSR "DOG" conductor, utilizing the Authority's forces and materials.

Approximately 2.5 miles of double circuit 66-kv transmission line, which also used the Authority's forces and materials, was constructed to extend the existing

66-kv Chichoki Mallian-Chuharkana circuit to the new Sheikhupura Substation. This steel tower line used ACSR "DOG" conductor in the construction.

The 66-kv system discussed here is shown on Sheets 1 and 2 of the "66-kv System One Line Diagrams" found in the Appendix. These diagrams show the integration and extensions of circuits into the project area's transmission system.

SUBSTATIONS

Nine substations are utilized in the Project Area to reduce the 66-kv transmission voltage to 11 kv distribution voltage. The power transformers used are three-phase, 66/11 kv with the primary side and the 11 kv side wye-connected, and the tertiary is delta-connected. The primary and secondary neutrals are solidly grounded. Additional information on substations and metering and relaying is provided on the Single Line Diagrams found in the Appendix.

NEW SUBSTATIONS

Five new substations were constructed within the Project Area. Four of these were constructed under Supply and Erection Contract C-25-12 with Brown Boveri and Cie and one was installed by the Authority. A Substation Area Key Map is found on Page 9. The substations constructed by Brown Boveri and Cie are:

Substations	Voltage Rating	Total KVA Installed	Transformer Rating-KVA
Shahkot	66/11-kv	10,000	2 - 5000
Warburton	66/11-kv	10,000	2 - 5000
Sheikhupura	66/11-kv	5,000	1 - 5000
Chiniot	66/11-kv	5,000	2 - 2500

These substations are unique because they are indoor-type with all equipment, except the power transformers, being installed in the building.

The 66-kv breakers are the air-blast type and are pneumatically operated. The 11-kv switchgear is of the "minimum oil" type, operated pneumatically and equipped with reclosing relays. Since the 66-kv switches are of the indoor-type and pneumatically operated, a rather elaborate interlocking scheme was provided to prevent incorrect switching.

Switching procedures and maintenance suggestions, in addition to the Authority's regular maintenance procedures, were prepared and issued for the operating personnel. A form, "Report of Breaker Operations", was also prepared and issued for the operating personnel.

The power transformers for these substations were not included in the contracts, but the 5-mva transformers were supplied by Siemens under Contract C-25-1-2 and the 2.5-mva transformers were supplied by I. E. Legnano under Contract C-25-1-1.

The new Bucheke 66/11-kv substation, with a capacity of 5-mva, was installed in the Zafarwal Scheme by the Authority's forces using equipment available with the Authority. Refer to the Bucheke Substation Single Line Diagram in the Appendix.

RENOVATED SUBSTATIONS

The Sukheki and Hafizabad 66/11-kv substations were renovated by Associated Electrical Industries (Pakistan) Ltd., under Contract C-25-13. The capacity of the Sukheki Substation was increased to a total of 15 mva by the installation of two 7.5-mva transformers purchased under Contract C-25-1-1 from I. E. Legnano. Associated Electrical Industries renovated two 66-kv circuit breakers, which had been removed from the old Sheikhupura Substation. These breakers were installed at Sukheki for transformer protection. Due to the fault capabilities at the station, new 11-kv switchgear was provided.

The capacity of the Hafizabad Substation was increased to 9 mva by the installation of one 5-mva transformer. Additional 11-kv switchgear was added to facilitate the new tubewell 11-kv feeders.

The existing Chuharkana Substation was renovated by the Authority's forces increasing the capacity to 7.5-mva by the installation of one transformer purchased from I. E. Legnano under Contract C-25-1-1. The existing 66-kv oil circuit breaker was renovated for protection of this transformer and the Authority proposes to install new 11-kv switchgear. The Single Line Diagram of this Substation, included in the Appendix, shows the proposed final arrangement.

Mohlan Substation is to be renovated by the Authority by the installation of two additional 11-kv circuit breakers. Equipment for this renovation will be furnished by the Authority. The Single Line Diagram, included in the Appendix, shows the proposed final arrangement.

Reference may be made to the Appendix for data regarding substation loading.

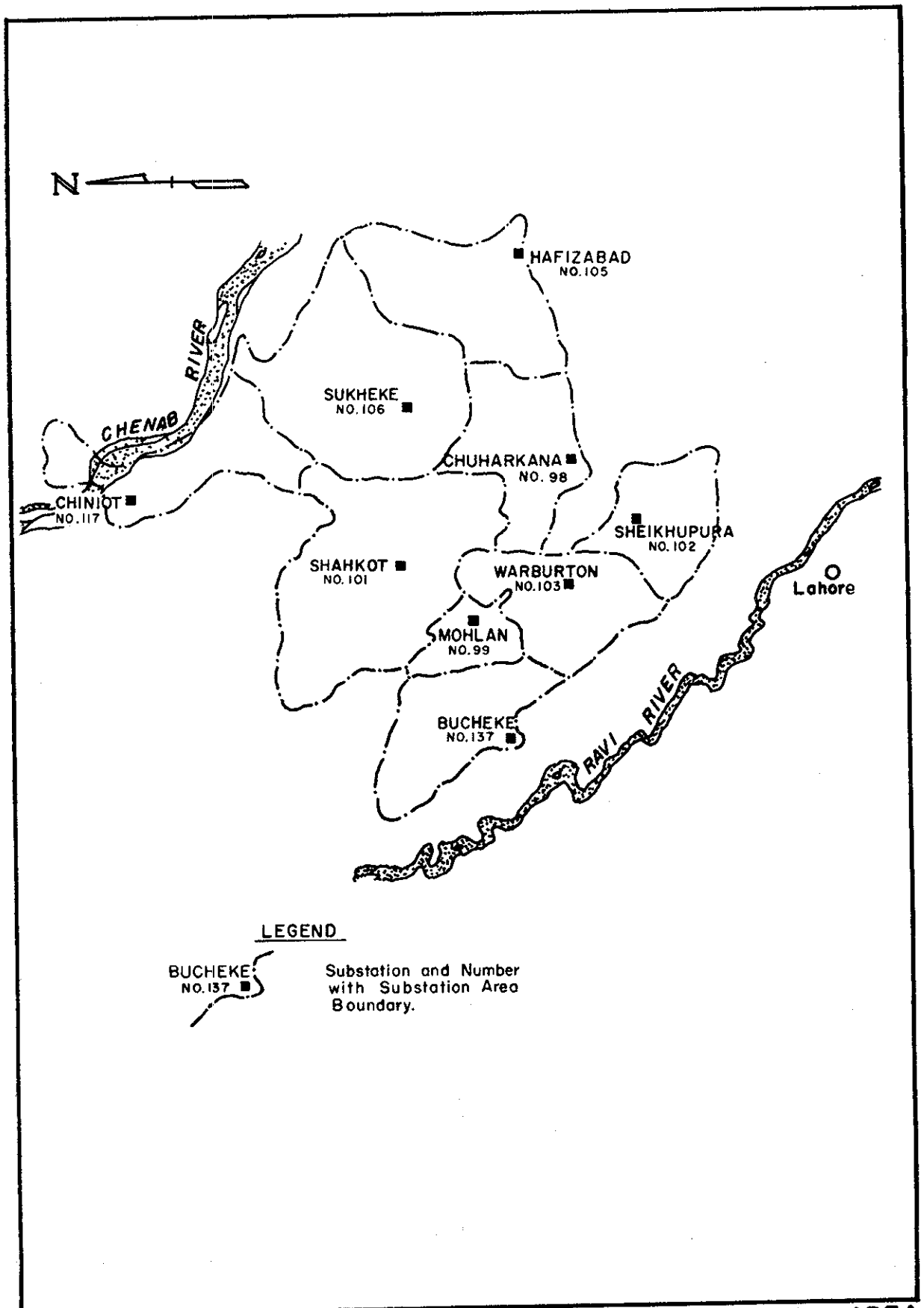

MINER AND MINER INTERNATIONAL, INC.

SUBSTATION AREA KEY MAP

DISTRIBUTION

The Project Area was divided into 24 Construction Areas, by using Tubewell Location Maps supplied by Tipton and Kalmbach, Inc. From these Location Maps and other base maps, six inch to the mile maps were prepared for transmittal of information to the construction forces. Individual work orders were prepared for each Construction Area, which resulted in about 1,388 miles of 11-kv and 400-volt lines being constructed.

Of this total about 314 miles of 11-kv and 400-volt lines utilized materials which were available from both the Colombo Plan and from the Authority's Stores. The remainder, 1,074 miles, were constructed from materials purchased under the Loan. The Circuit Diagrams of the distribution system, as constructed under the Loan, provide lengths of circuits, conductor sizes, and the number of tubewells connected. These Diagrams are found in the Appendix.

The circuits constructed with locally available material utilized copper conductor supported on lattice steel structures and tubular steel poles, while those constructed with Loan materials utilized ACSR conductors and lattice steel structures.

The 11-kv distribution lines, constructed by the Authority's forces, are three conductor lines without a continuous neutral. This construction, of necessity, was performed without regard to Scheme Area. Where tubewell locations and conductor sizes permitted, three-phase, 400-volt lines with neutral were utilized. As economy dictated, these lines were either constructed on separate structures from the 11-kv lines or on the same structures. The distribution transformers are three-phase, 11,000/400 volt with delta connected primaries and wye connected secondaries. The neutral of the wye is grounded and carried continuously to the service point.

Services to the individual tubewells were provided with material purchased under the Loan and consisted of the installation of quadruplex cables. This cable consists of three aluminum insulated conductors and one steel conductor used as a neutral from the service pole to the pumphouse. Each service was terminated on the pumphouse to a steel conduit extending above the roof of the house. This termination provides both ground clearance and a service entrance into the meters and motor control. One three-phase power meter and one single-phase meter for lighting were installed according to the Authority's general practice.

Fault sectionalizing of the individual 11-kv circuits was provided by the installation of pole-top oil circuit reclosers and by sectionalizing fuses. Information pertaining to the operation of these devices and a suggested maintenance and record routine was submitted to the Operations Division.

The six inch to the mile maps were prepared for transmittal of information to the construction forces. These maps provided the locations of the 11-kv feeder circuits, including conductor sizes as determined from voltage drop studies. Also shown were pole sizes, pole-top assemblies per the developed construction standards, the distribution transformer sizes for each tubewell or groups of tubewells, and other pertinent data required by the construction forces.

In addition to these maps, work orders were prepared which included an estimated bill of material taken from the construction maps. These bills of material were established on the basis of the accounting procedure as approved by the Authority. From these material lists, material requests were prepared by the construction forces and submitted to the Warehouse or Remote Storage site. Material was then issued to authorized personnel against a materials issue statement.

During construction, Construction Inspectors worked directly with the Authority's construction forces for making necessary field changes and to assist the forces in understanding and carrying out the work orders. Upon completion of the individual circuits, inspections were carried out and omissions and defects were noted and corrected by the construction forces.

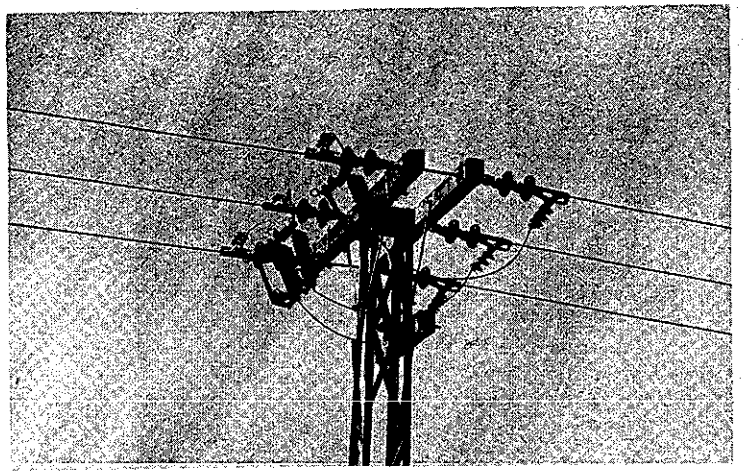

Figure 1. Close-up installation of 11-kv sectionalizing fuse.

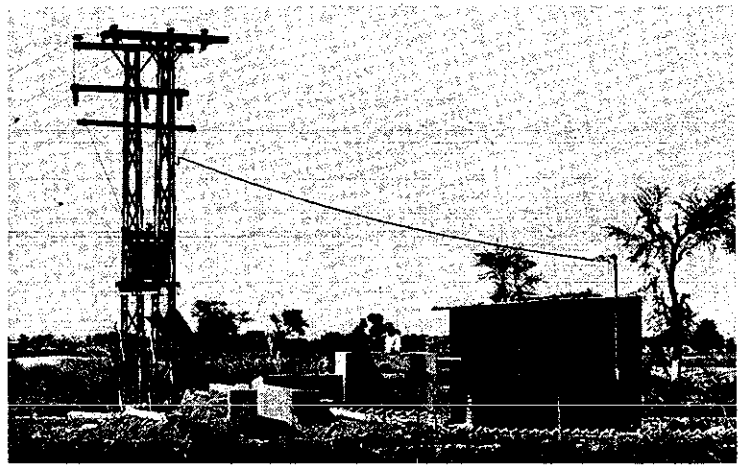

Figure 2. Typical Tubewell installation with transformer and service.

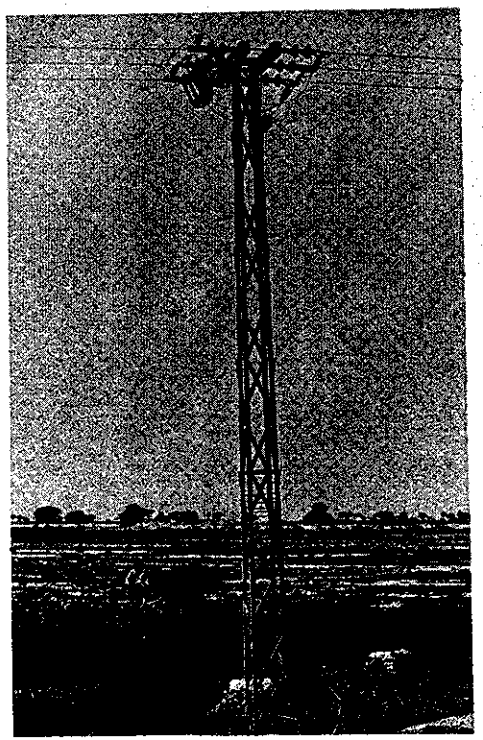

Figure 3. Sectionalizing fuse installation.

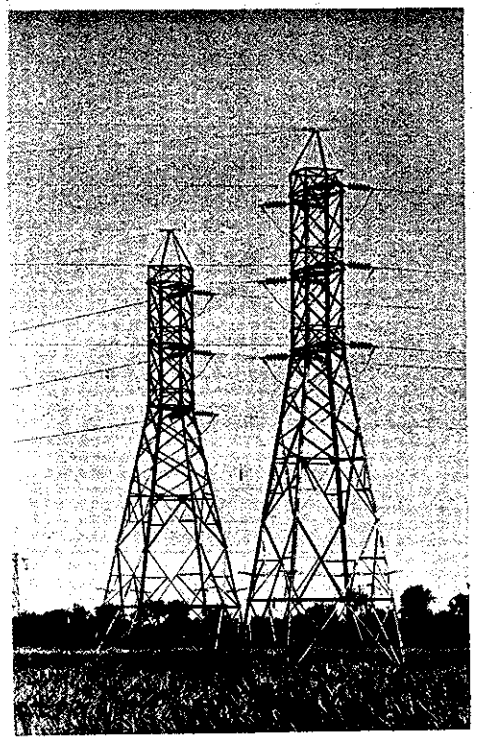

Figure 4. 66-kv Double Circuit Towers.

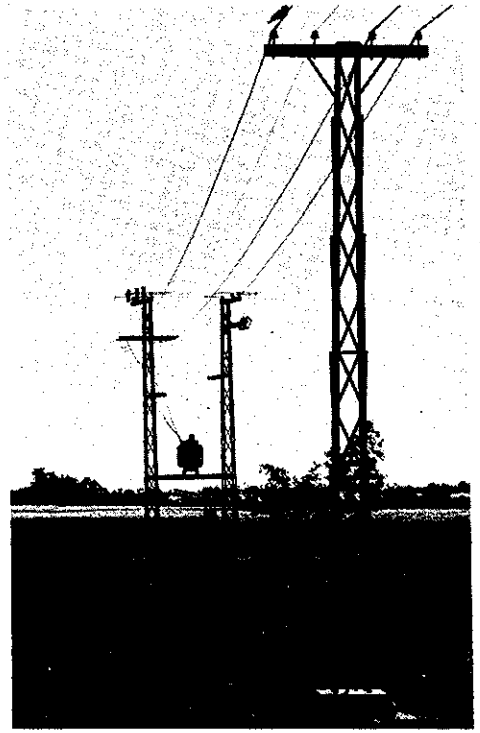

Figure 5. 11-kv/400 Volt, 3-phase transformers, with a 400 volt secondary line.

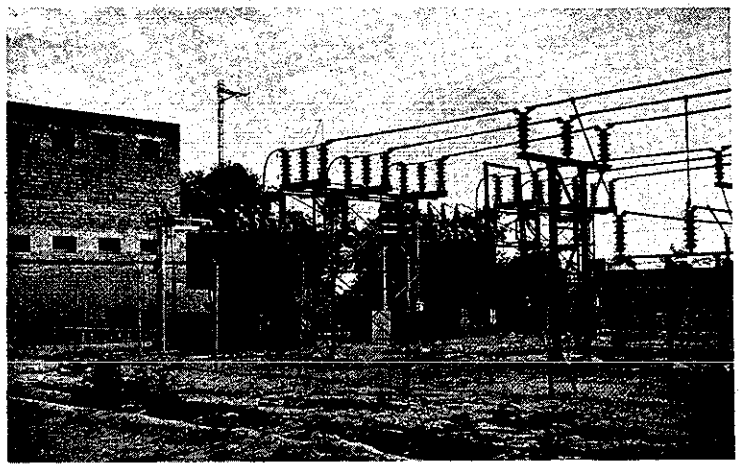

Figure 6. Installation of 66-kv, 3-phase transformers and indoor switch house.

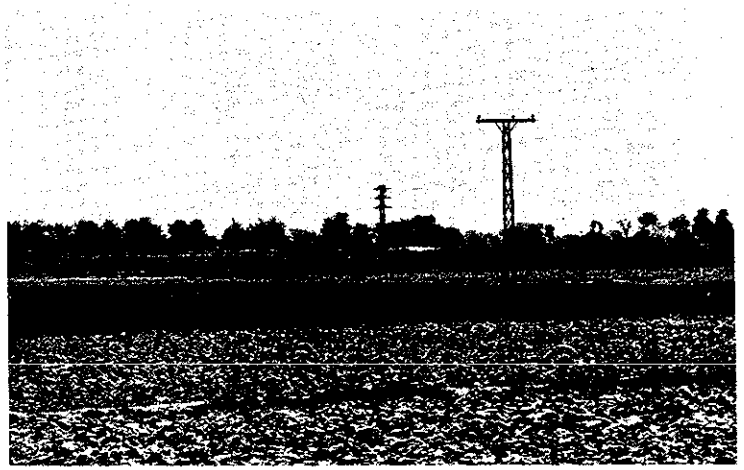

Figure 7. Installation of 11-kv distribution line with latticed steel poles.

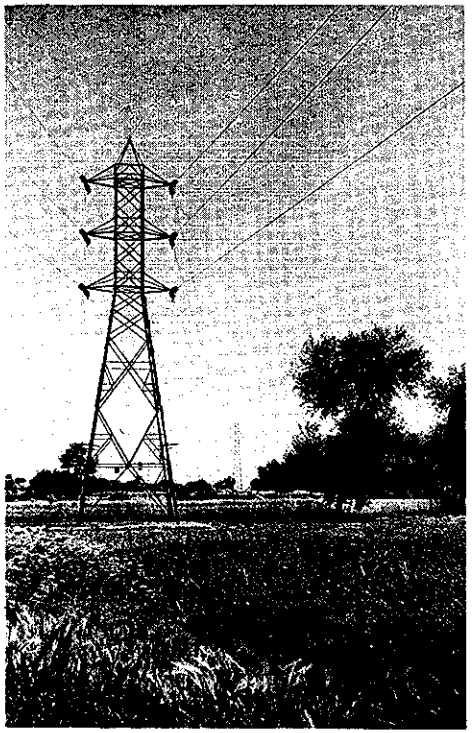

Figure 8. Double-circuit steel towers for 66-kv transmission line.

Figure 9. Material stock pile.

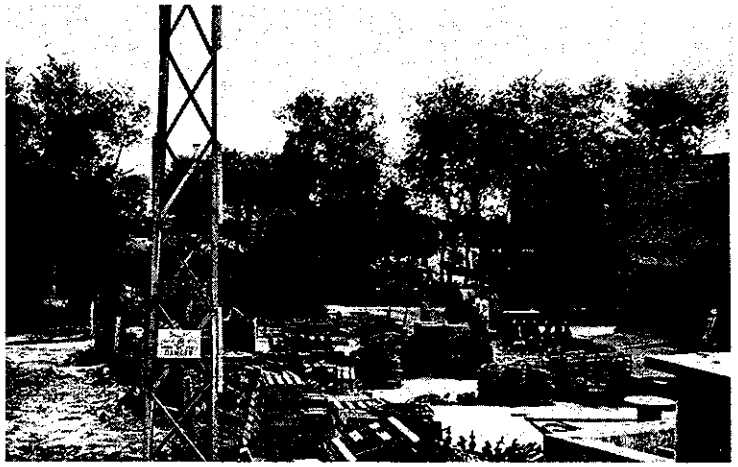

Figure 10. Installation of 11-kv, 90° corner showing guying.

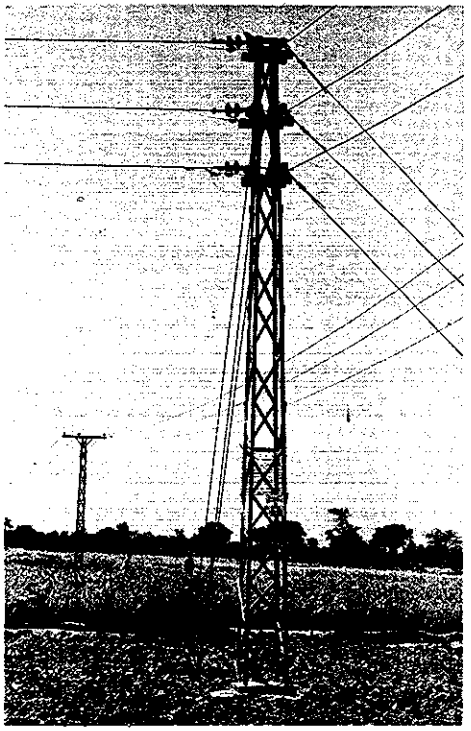

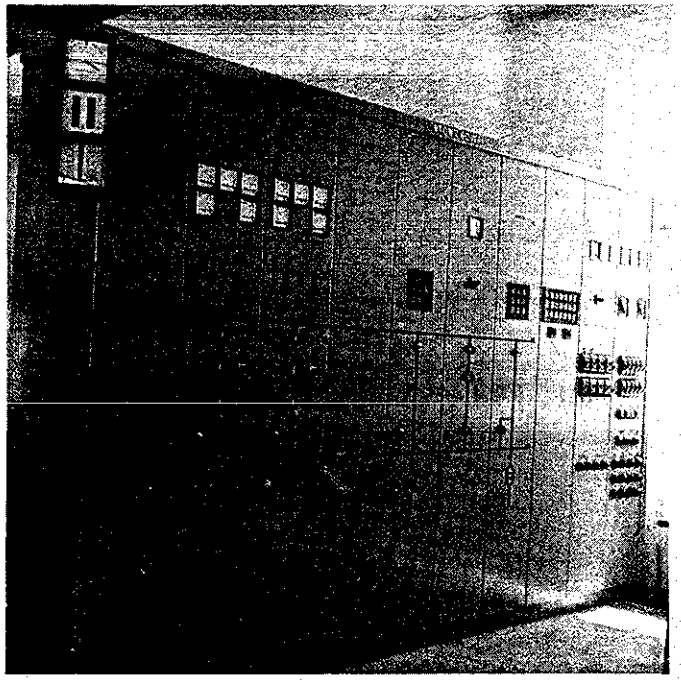

Figure 11. Control board installation - Chiniot Substation.

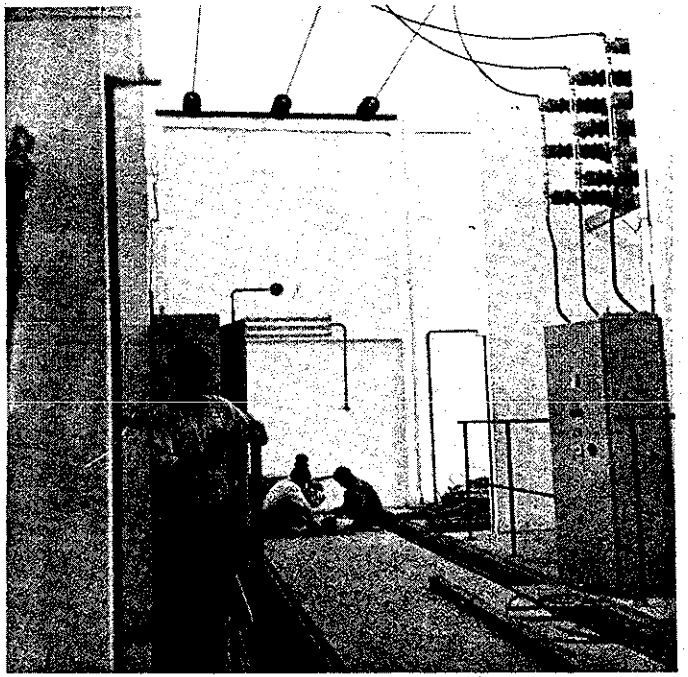

Figure 12. Installation of 66-kv indoor equipment - Chiniot Substation.

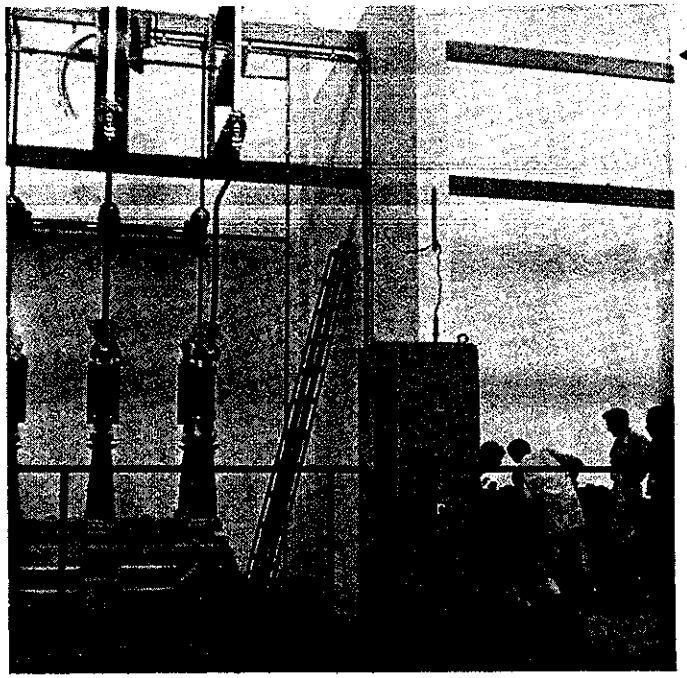

Figure 13. 66-kv hall - Chiniot Substation.

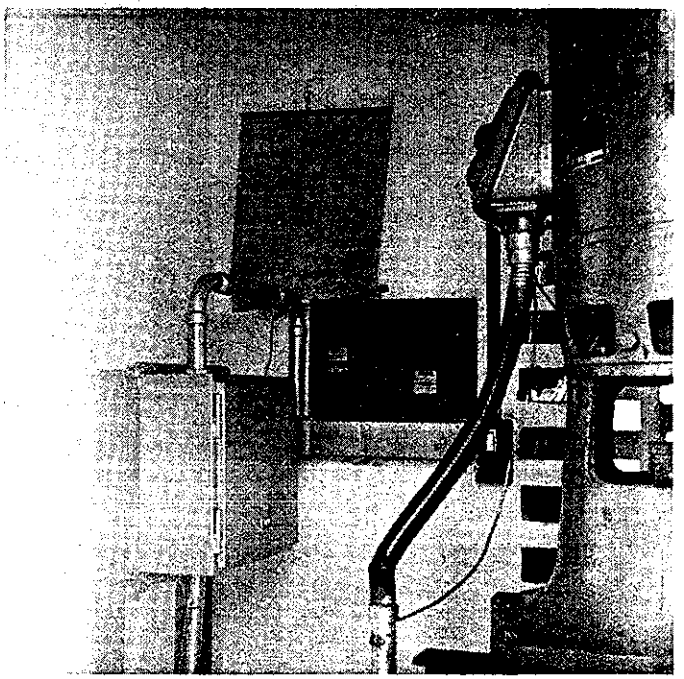

Figure 14. Typical Tubewell electrical installation.

DISBURSEMENT AND ACCOUNTING OF FUNDS

Budget Control Report

Of the 15.2 million dollar loan for the foreign exchange costs of the project, $6,382,600 were allocated for the electrification portion. The local currency requirements were furnished by the Authority.

Accounting for the project was done by the Authority's Project Accountant on all expenditures except those for contracts approved directly within the Authority. The Budget Control Report on Page 13, was submitted by the Project Accountant for the reporting period of March, 1964. This is the latest report available at the time of writing this report.

Dollar expenditures were made against Letters of Commitment established by the Development Loan Fund as requested by the Authority and certified by the Engineer.

Letters of Credit were established by the Authority against these Letters of Commitment in accordance with the terms of the individual contracts. Where required by contracts, invoices submitted to the Authority were reviewed by Miner and Miner prior to the Authority's sanction for payment.

Where a contract required rupee payment, invoices were reviewed by Miner and Miner, according to the terms of the contract, and approved prior to payment by the Authority.

BUDGET CONTROL REPORT

FOR

SALINITY CONTROL AND RECLAMATION (ELECTRIFICATION)

PROJECT NO. 1

MARCH, 1964

	BUDGET ITEMS	Totals to Date $	Totals to Date Rs.	Budget $	Budget Rs.
1.	Distribution Facilities	3,187,189	25,803,039	3,299,022	19,158,084
2.	Transmission Facilities	239,391	1,565,249	332,500	1,090,000
3.	Substation Facilities	597,799	2,053,969	1,024,700	3,060,382
4.	Vehicles)	-	-	704,926	1,519,295
	)				
5.	Construction Equipment)	747,719	1,121,618		
6.	Miscellaneous Equipment	-	906,288	20,000	354,271
7.	Engineering & Supervision	1,175,124	3,011,980	982,500	765,000
8.	Administration	26,353	6,528,349	18,952	2,960,001
	TOTALS	5,973,575	40,990,492	6,382,600	28,907,033

R E C O M M E N D A T I O N S

In order to realize optimum use of the constructed facilities, operation and maintenance procedures must be reviewed continuously and corrected when necessary. Any electrical distribution system which required the magnitude of construction that this project required will present many operations and maintenance problems.

The following recommendations are made in the interest of prolonging the life of the equipment and providing the desired quality and continuity of service to the tubewell pumps. These recommendations are in addition to the Authority's regular operation and maintenance procedures.

1. The record maps, which are scaled one inch to the mile, show the layout of individual circuits by substations. These maps should be regularly maintained. It is recommended that a procedure be established for posting: circuit extensions, changes in sectionalizing facility locations, changes in distribution transformers, or any change affecting the operation of the circuit. If these changes are regularly posted, the maps can be reviewed periodically, and from this review recommendations for system improvements can be made.
2. Extensions to the constructed system should be done on the basis of voltage drop studies and a review to determine the effect that the extension would have on the circuit. In addition, the connection to the circuits must be made according to the instructions issued during construction, because of the extensive use of ACSR conductor.
3. In addition to the posting of changes on the maps, the trouble report, as recommended in the substation switching procedure, should be reviewed periodically in order to correct the indicated trouble spots.
4. For the protection of personnel and equipment, it is essential that the operations and maintenance records, regarding pole top oil circuit reclosers, be maintained and reviewed periodically.
5. Records of the distribution transformers should be maintained for accurate accounting of the equipment. Also, the records would supply information concerning the needs for particular types of maintenance, which may prolong the life of the equipment.
6. It is suggested that the 11-kv switchgear be installed at the Chuharkana and Mohlan Substations as an expedient in improving

the continuity of service to the tubewells.

7. It is strongly recommended that a communication system be installed. This will provide for better utilization of the facilities installed, continuity of service, and for integrating the operation of the constructed system into the West Pakistan Grid. With a communication system, the Power Controller has control of the substations and transmission lines, and service outages are re-established in a minimal amount of time.

   Recommendations for establishing a communication system were presented to the Authority in the beginning stages of the project.

The implementation of these recommendations, plus the experience acquired from the actual operation of the system, should improve the continuity of service with less operating and maintenance costs.

A P P E N D I X

Organization Chart

Table	I.	Procurement of Materials and Supplies Under DLF Loan 25
Table	II.	11-kv Distribution Circuit Data By Substation
Table	III.	Distribution Transformers Connected
Table	IV.	Number of Tubewells By Scheme
Table	V.	Pump Motors Connected
Table	VI.	Summary of Line Miles By Material Source By Substation

DRAWINGS

Single Line Diagrams 66-kv System Sheets 1 and 2

Single Line Diagrams 66/11-kv Substations

- Chuharkana
- Mohlan
- Shahkot
- Sheikhupura
- Warburton
- Hafizabad
- Sukheki
- Chiniot
- Bucheke

Circuit Diagrams - Tubewell Electrical Distribution

Layout, 11 kv, 3-phase

- Chuharkana
- Mohlan
- Shahkot
- Sheikhupura
- Warburton
- Hafizabad
- Sukheki
- Chiniot
- Bucheke

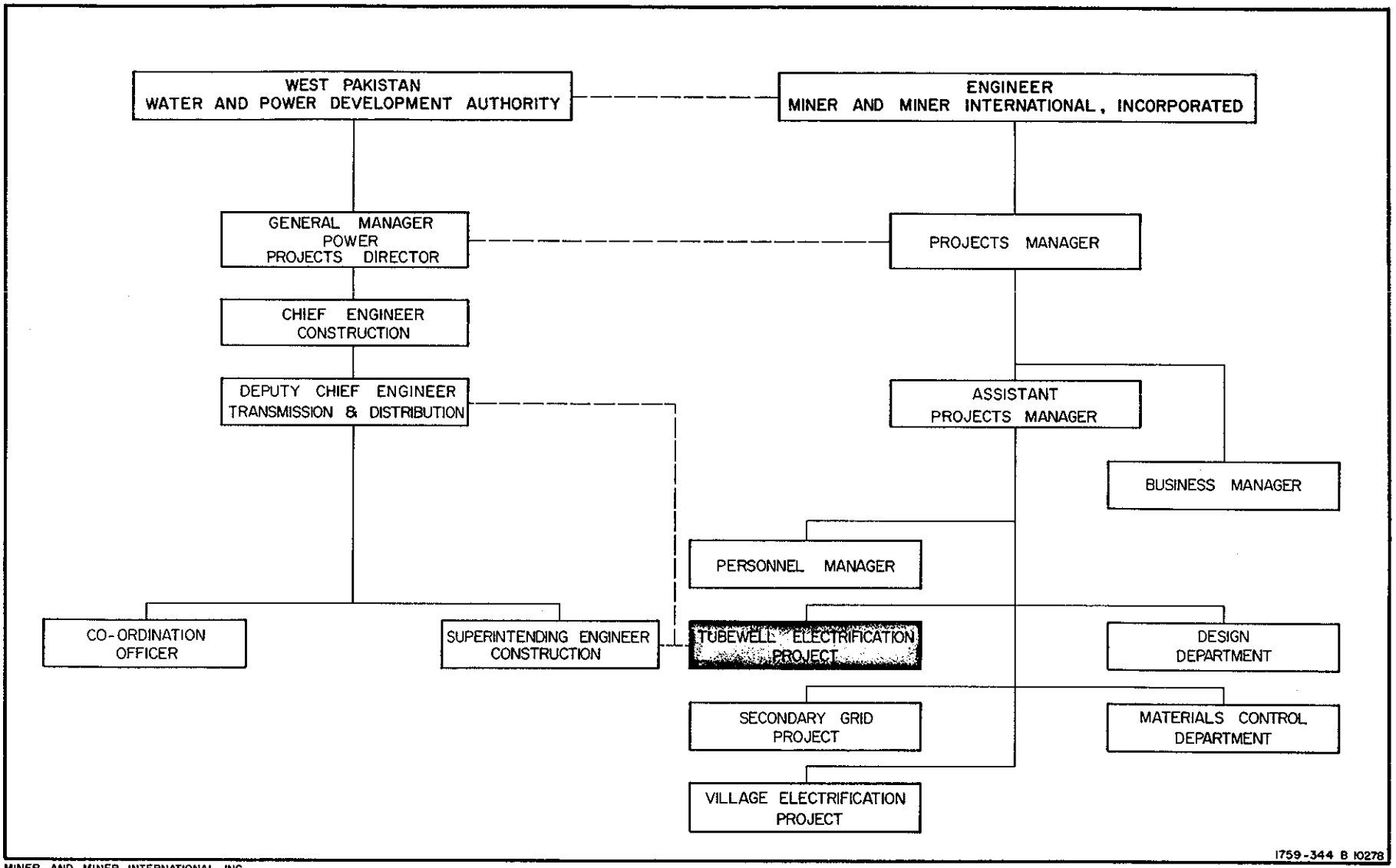

MINER AND MINER INTERNATIONAL, INC.,
MAY 26, 1964.

ORGANIZATION CHART

BEST AVAILABLE COPY

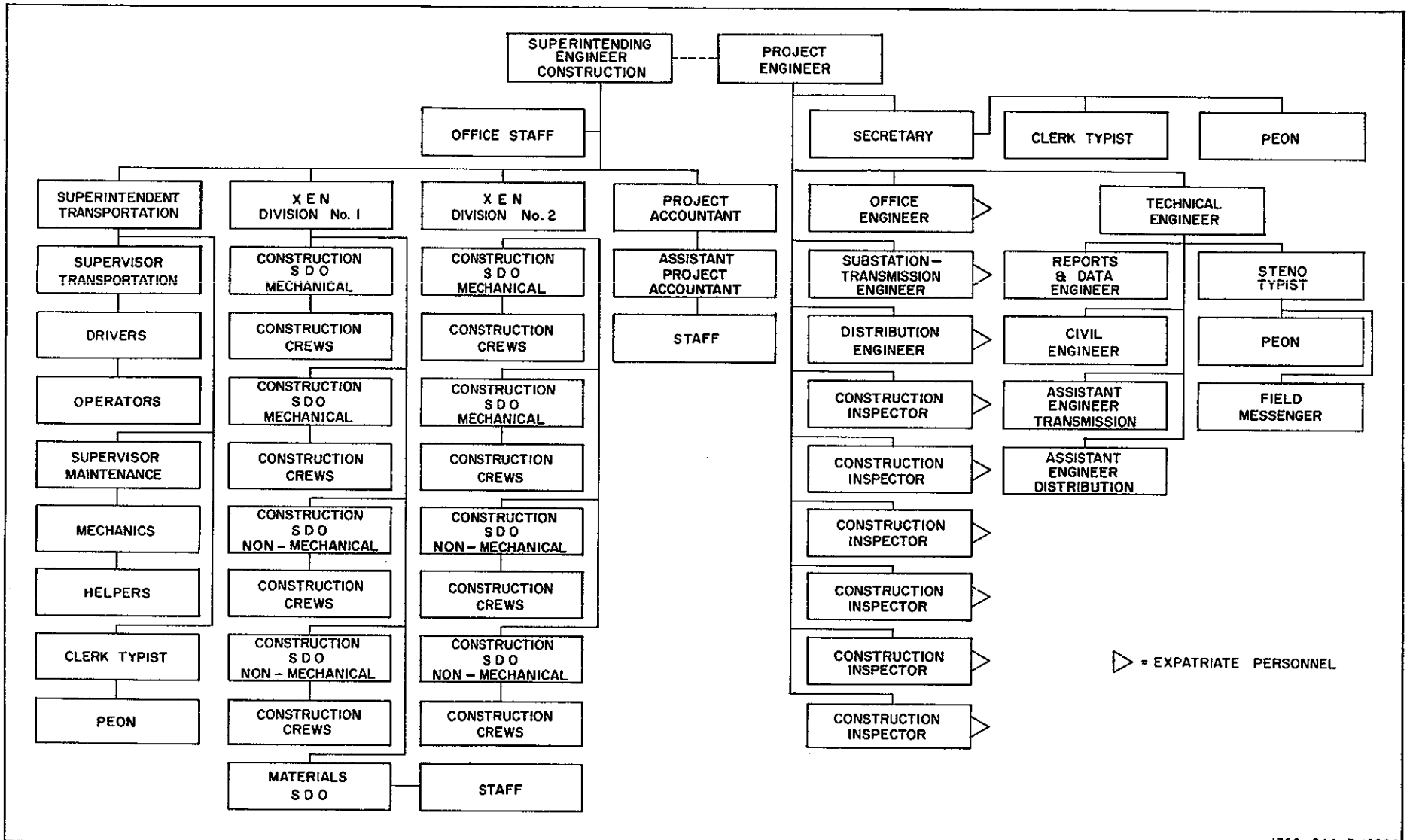

MINER & MINER INTERNATIONAL, INC.,
MAY 26, 1964.

1759-344 B 10280

TUBEWELL ORGANIZATION CHART

BEST AVAILABLE COPY

TABLE I. PROCUREMENT OF MATERIALS AND SUPPLIES UNDER DLF LOAN 25

A. Tender List and Contracts - Letter of Commitment DLF 391-27

Power Transformers
Distribution Transformers
Porcelain Insulators
Wood Cross Arms
Tubular Steel Poles
Wood Poles
ACSR Conductor and Accessories
Distribution Line Material
Fuses, Arresters, Switches, and Oil Circuit Reclosers
Lattice Steel Structures
Renovate Sukheki and Hafizabad Substations
Service Materials
Distribution Transformers
Watthour Meters

B. Tender List and Contracts - Letter of Commitment DLF 391-39

66-kv Transmission Line
Sheikhupura, Warburton, Shahkot, and Chiniot Substations

C. Construction Equipment and Supplies - Letter of Commitment DLF 391-10

List of Purchases through R. E. B. Willcox and Company

TABLE IA. TENDER LIST AND CONTRACTS
AWARDED AGAINST
LETTER OF COMMITMENT DLF 391-27

FINAL TOTAL OF LETTER OF CREDIT
391-27 $3,514,500.00

NOTE: Charges from Lloyd's Register of shipping for inspection services were included in this Letter of Credit.

TENDER T-25-1

Supply and erection of power transformers (and spare parts) for Shahkot, Hafizabad, Sukheki, Sheikhupura, Chiniot, Warburton, and Chuharkana Substations. Two 2.5 mva, six 5 mva, and three 7.5 mva, 66/11-kv, 3-winding, 3-phase, 50 CPS.

BIDDER	COUNTRY OF ORIGIN
Industrie Elettriche de Legnano	Italy
Compagnia Generale di Elettricita	Italy
International General Electric	United States
English Electric Company	England
Siemens Schuckerwerte AG (for Siemens Engineering Company Ltd., Pakistan)	West Germany
Ansaldo-San Girogio	Italy
Ercole Marelli and Company	Italy
Elin Union Aktiengesellschaft	West Germany
Aktiebolaget Elektromekano	Sweden
Wagner Electric Company	United States
Hawker Siddeley Brush International Ltd.	England
Associated Electrical Industries Ltd.	England

AWARDED AS FOLLOWS:

Contract C-25-1-1

Industrie Elettriche de Legnano — Italy

Supply and erect two 2.5 mva and three 7.5 mva transformers and supply spares for Chiniot, Sukheki, and Chuharkana Substations.

Shipment by R. E. B. Willcox

Contract C-25-1-2

Siemens Schuckerwerte AG — West Germany

Supply and erect six 5 mva transformers and supply spares for Shahkot, Hafizabad, Sheikhupura, and Warburton Substations.

Shipment by R. E. B. Willcox

TENDER T-25-2

Supply distribution transformers rated 25 KVA, 50 KVA, 75 KVA, and 100 KVA. 11/0.4 kv, 2-winding, 3-phase, 50 CPS.

BIDDER	COUNTRY OF ORIGIN
Siemens Schuckerwerte AG	West Germany
Allgemeine Elektrioitats - Gesellschaft	West Germany
Pellizzari and Figli (for American Ligurian Company, Inc., United States)	Italy
Compagnia Generale di Elettricita	Italy
Ing. U. Zennaro (for Imperial Electric Company, Pakistan)	Italy
Ercole Marelli and Company	Italy
International General Electric	United States
Westinghouse International Electric Company	United States
Wagner Electric Corporation	United States
Ateliers de Constructions Electriques de Charleroi	Pakistan
Ameejee Valleejee and Sons (for Brown Boveri & Cie, Switzerland)	Pakistan
Manasco, Inc.	United States
General Electric Company Limited	England
English Electric Company	England
Crompton Parkinson Limited	England
Associated Italian Commercial Agencies (for Ansaldo San Giorgio, Italy)	Pakistan
Associated Electrical Industries Export Ltd.	England
Thomas P. Burns	United States
Thomas B. Thrige	Denmark
Elin Union Aktiengesellschaft	West Germany

AWARDED AS FOLLOWS:

Contract C-25-2

Siemens Schuckerwerte AG — West Germany

Supply distribution transformers

Shipment by R. E. B. Willcox

TENDER T-25-3

Supply 11-kv pin type, 6" suspension, guy strain, and 3" spool porcelain insulators.

BIDDER	COUNTRY OF ORIGIN
Nippon Gaishi Kaisha Ltd.	Japan
Greaves Crompton Parkinson Limited (for Bullers Limited, England)	Pakistan
The Imperial Electric Company	Pakistan
Radiofabrik Ingelen - Porzellanfaorik Frauenthal Figer and Company	West Germany
A. B. Chance Company	United States
Copperweld Steel International Company	United States
British Insulated Callender's Cables Limited	England
H. K. Porter Company, Inc.	United States
International Standard Electric Corporation	United States
Societa Anonima Elettrificazione (for Nippon Gaishi Kaisha Ltd., Japan)	Italy
Wessel-Draeger Vertriebs - GmbH	West Germany
Compagnie Generale D'Electro-Ceramique	France
Albario Trading Corporation (for Societa Ceramiea Italians S.p.A., Italy)	Pakistan

AWARDED AS FOLLOWS:

Contract C-25-3

Nippon Gaishi Kaisha, Ltd. — Japan

Supply of porcelain insulators - pin type 11-kv pin type, 6" suspension, guy strain, and 3" spool type insulators.

TENDER T-25-4

Supply distribution crossarms, timbers, planks, ground wire moulding.

BIDDER	COUNTRY OF ORIGIN
G. A. Serlachius Oy Kolho	Finland
Henrik Mannerfrid A. B.	Sweden
Shaws	Pakistan
Sh. Mohammad Iqbal and Company	Pakistan
Hameedsons	Pakistan
Malik Salah-ud-Din and Bros.	Pakistan
Lahore Construction Company	Pakistan
Niedermeyer-Martin Company	United States
Koppers Company Inc.	United States
Railway Tie Corporation of America	United States
International Standard Electric Corporation	United States
British Insulated Callender's Cables Limited	England

AWARDED AS FOLLOWS:

Contract C-25-4

Government Electrical and Mechanical Workshop	Pakistan

NOTE: No foreign currency involved in this contract and a sufficient supply of materials was available locally, therefore it was decided to employ the services of the Government Electrical and Mechanical Workshop.

TENDER T-25-5

Supply tubular steel poles and zinc paint.

BIDDER	COUNTRY OF ORIGIN
Stewarts and Lloyds Ltd.	England
The Imperial Electric Company	Pakistan
The Karachi Company Limited	Pakistan
Associated Italian Commercial Agencies (for Dalmine S.p.A., Italy)	Pakistan
Comptoir FBT (for MM. Andrew and Company Ltd., Pakistan)	France
A. Rahman & Company (Pakistan) Ltd., (for Mannesmann GmbH, West Germany)	Pakistan
Albario Trading Corporation	Pakistan
Merge Trading Company	Pakistan

NO CONTRACT AWARDED AGAINST THIS TENDER

TENDER T-25-6

Supply treated wood poles.

BIDDER	COUNTRY OF ORIGIN
Pacific Lumber and Shipping Company	United States
Ernest Seidelmann Corporation	United States
The Imperial Electric Company	Pakistan
Koppers Company Inc.	United States
Suecia	Sweden
Greenheart (Demerara) Inc.	United States
Atlantic Creosoting Company	United States
Oy. Impregno Ab.	Finland
Shoblad Lumber Company	United States
Railway Tie Corporation of America	United States
Neidermeyer-Martin Company	United States
International Standard Electric Corporation	United States
Eppinger and Russell Company	United States
British Insulated Callender's Cables Limited	England

NO CONTRACT AWARDED AGAINST THIS TENDER

TENDER T-25-7

Supply ACSR conductor, insulated aluminum conductor, steel messenger, guy strand, armor rod, and accessories.

BIDDER	COUNTRY OF ORIGIN
Finska Kabelfabriken Aktiebolag	Finland
British Insulated Callender's Cables Limited	England
Associated Electrical Industries (Pakistan) Limited	Pakistan
The Imperial Electric Company	Pakistan
Tijarat Agencies	Pakistan
A. Salvi and Company	Italy
Copperweld Steel Company	United States
Elettro-Morsettrie Volpato	Italy
Ferimport-Metalprodukt	Yugoslavia
Societa Anonima Elettrificazione	Italy
Asian Associated Agencies	Pakistan
Alcan Asia Limited	Canada
Merge Trading Corporation	Pakistan
Albario Trading Corporation	Pakistan
Preformed Line Products	United States

AWARDED AS FOLLOWS:

Contract C-25-7-1

Ferimport-Metalprodukt — Finland

Supply "Dog" and "Gopher" ACSR conductor.

Contract C-25-7-2

Associated Electrical Industries (Pakistan) Limited — Pakistan

Supply guy strand and insulated aluminum guadruplex service cable.

Contract C-25-7-3

Finska Kabelfabriken Aktiebolag — Finland

Supply "Raccoon" ACSR conductor, splices, and accessories.

Shipment by R. E. B. Willcox

Contract C-25-7-4

British Insulated Callender's Cables Limited — England

Supply armor rods for ACSR conductor.

Shipment by R. E. B. Willcox

TENDER T-25-8

Supply 11-kv and 400 volt distribution line material.

BIDDER	COUNTRY OF ORIGIN
Tijarat Agencies (for Transelectric A.B., Sweden)	Pakistan
Societa Anonima Elettrificazione	Italy
Societa Elettro-Morsetterie Volpato	Italy
Brauner Export Company	United States
A. Salvi and Company	Italy
British Insulated Callender's Cables Limited	England
The Karachi Company Ltd.	Pakistan
Greaves Crompton-Parkinson Ltd.	Pakistan
Joslyn Manufacturing and Supply Company	United States
Copperweld Steel Company	United States
The Imperial Electric Company (for Shofu Industrial Company Ltd., Japan)	Pakistan
Line Material Industries	United States
Brown Boveri & Cie.	West Germany
Philips Export Company	United States

AWARDED AS FOLLOWS:

Contract C-25-8-1

Philips Export Corporation — United States

Supply clamps, connectors, and copperweld wire.

Contract C-25-8-2

Line Material Industries — United States

Supply connectors and ground rods.

Contract C-25-8-3

British Insulated Callender's Cables Limited — England

Supply crossarm pins.

Shipment by R. E. B. Willcox

Contract C-25-8-4

Societa Anonima Elettrificazione — Italy

Supply locknuts, shackles, washers, and braces

Shipment by R. E. B. Willcox

Contract C-25-8-5

Brown Boveri & Cie. West Germany

Supply galvanized steel anchor rods and guy thimbles.

Shipment by R. E. B. Willcox

TENDER T-25-9

Supply fuse cutouts, fuse links, lightning arresters, oil circuit reclosers, and air break switches.

BIDDER	COUNTRY OF ORIGIN
Magrini	Italy
British Insulated Callender's Cables Limited	England
Joslyn Manufacturing and Supply Company	United States
Southern States Equipment Corporation	United States
A. B. Chance Company	United States
Line Material Industries	United States
Merge Trading Corporation	Pakistan
International General Electric Company	United States
The Imperial Electric Company (for Ateliers de Constructions Electriques de DELLE Villeurbanne, France)	Pakistan
Allmana Svenska Elektriska Aktiebolaget	Sweden
Copperweld Steel Company	United States
International Standard Electric Corporation	United States
Westinghouse Electric Company	United States

AWARDED AS FOLLOWS:

Contract C-25-9-1

Magrini — Italy

Supply air break switches.

Shipment by R. E. B. Willcox

Contract C-25-9-2

International Standard Electric Corporation — United States

Supply fuse cutouts and fuse links.

Contract C-25-9-3

Westinghouse Electric Company — United States

Supply lightning arresters and oil circuit reclosers.

TENDER T-25-10

Supply lattice steel structures and zinc paint.

BIDDER	COUNTRY OF ORIGIN
Societa Anonima Elettrificazione	Italy
Adamali Mohamedali Lotia and Company	Pakistan
Merge Trading Corporation (for Trefileries and Laminors Du Havre, France)	Pakistan
Johnson and Phillips, Ltd.	Pakistan
Batala Engineering Co. (Pakistan) Ltd.	Pakistan
Steel Brothers and Company	Pakistan
Karachi Shipyard and Engineering Works Ltd.	Pakistan
W. T. Hensley's Telegraph Works Company Ltd.	England
Associated Italian Commercial Agencies (for Construzione Metalliche Finsider S.p.A., Italy)	Pakistan
Lee C. Moore Corporation	United States
Tubewrights Ltd.	England
The Imperial Electric Company	Pakistan

AWARDED AS FOLLOWS:

Contract C-25-10

Societa Anonima Elettrificazione — Italy

Supply lattice steel structures and zinc paint.

Shipment by R. E. B. Willcox

TENDER T-25-13

Supply and install (except power transformers) and renovate the Sukheki, Hafizabad, Mohlan Substations making full use of existing equipment.

BIDDER	COUNTRY OF ORIGIN
British Insulated Callender's Cables Limited	England
Associated Electrical Industries (Pakistan) Ltd.	Pakistan

AWARDED AS FOLLOWS:

Contract C-25-13

Associated Electrical Industries (Pakistan) Ltd.	Pakistan

Supply and install (except power transformers) and renovate the Sukheki and Hafizabad Substations making use of existing equipment.

TENDER T-25-14

Supply electrical service equipment and materials.

BIDDER	COUNTRY OF ORIGIN
International Standard Electric Corporation	United States
Brauner Export Company	United States
Philips Export Company	United States
Line Material Industries	United States
International General Electric Company	United States
British Insulated Callender's Cables Limited	England
The Imperial Electric Company (for Mitsui Bussan Kaisha Limited, Japan)	Pakistan
A. B. Chance Company	United States

AWARDED AS FOLLOWS:

Contract C-25-14-1

Brauner Export Company — United States

Supply condulets, connectors, and ground rods.

Contract C-25-14-2

Mitsui Bussan Kaisha Limited — Japan

Supply bolts, brackets, and clamps.

Contract C-25-14-3

International General Electric Company — United States

Supply conduit, service heads, locknuts, and insulator copper conductors.

TENDER T-25-15

Supply distribution transformers rate 25 KVA and 50 KVA, 2-winding, 3-phase, 50 CPS.

BIDDER	COUNTRY OF ORIGIN
The Imperial Electric Company (for Ing. U. Zennaro, Italy)	Pakistan
Jaffer Brothers, Ltd.	Pakistan
Ameejee Valleejee and Sons (for Compagnie Electro-Mecanique, France)	Pakistan
Zelin Limited (for International General Electric, United States)	Pakistan
Pak Elektron	Pakistan
Merline and Gerin	Italy
Wagner Electric Corporation	United States
Costruzione Impedenze Transformatori Elettrici	Italy
Elin-Union	West Germany
AEG-Electrotecnio GmbH (for Allgemeine Elektricitats-Gesellschaft, West Germany)	Pakistan
Thomas B. Thrige	Denmark
Crompton-Parkinson Ltd.	England
Sjemens Schuckertwerte Aktiengesellschaft	West Germany
Compagnia Generale de Elettricita	Italy
Transimpex (Pakistan) (for Construction Electriques Pauwells S.A., Belgium)	Pakistan

AWARDED AS FOLLOWS:

The Imperial Electric Company	Pakistan (Italy)

Supply distribution transformers rated 25 KVA and 50 KVA, 2-winding, 3-phase, 50 CPS.

TENDER T-25-16

Supply watthour meters, 400 volt, 3-phase, 230 volt, 1-phase.

BIDDER	COUNTRY OF ORIGIN
Ameejee Valleejee and Sons (for Landis and Gyr, Switzerland)	Pakistan
Siemens Pakistan Engineering Company (Primary)	Pakistan
Allgemeine Elektricitats-Gesellschaft	West Germany
Siemens Pakistan Engineering Company (Alternate)	Pakistan
Siemens Schuckertwerte Aktiengesellschaft	West Germany
English Electric Company Ltd.	England
Westinghouse Electric International Company	United States
International General Electric	United States
Associated Electrical Industries Limited	England
British Insulated Callender's Cables Limited	England

AWARDED AS FOLLOWS:

Contract C-25-16

Ameejee Valleejee and Sons (for Landis and Gyr, Switzerland) — Pakistan

Supply watthour meters, 400 volt, 3-phase, 230 volt, 1- phase.

TABLE IB. TENDER LIST AND CONTRACTS
AWARDED AGAINST
LETTER OF COMMITMENT DLF 391-39

FINAL TOTAL OF LETTER OF CREDIT
391-39 $749,100.00

TENDER T-25-11

Supply and erect and commission 3-phase, 66-kv transmission line with one overhead ground wire on steel towers.

BIDDER	COUNTRY OF ORIGIN
British Insulated Callender's Cables Limited	England
W. T. Hensley's Telegraph Works Company Limited	Pakistan
The Imperial Electric Company (for Kamani Engineering Corporation Ltd., India)	Pakistan
Associated Electrical Industries (Pakistan) Inc.	Pakistan
Societa Anonima Elettrificazione	Italy

AWARDED AS FOLLOWS:

Contract C-25-11

Societa Anonima Elettrificazione — Italy

Supply and erect and commission 3-phase, 66-kv transmission line with one overhead ground wire on steel towers.

TENDER T-25-12

Supply and erect 66/11-kv substations at Shahkot, Warburton, Sheikhupura, and Chiniot. (Power transformers excepted).

BIDDER	COUNTRY OF ORIGIN
Officine Elettromeccaniche Galileo de Battaglia Terme S.p.A.	Italy
Brown Boveri and Cie.	West Germany
Crompton Parkinson Limited	England
O. E. Scarpa E. Magnano	Italy
Siemens Pakistan Engineering Company Limited (for Siemens Schuckerwerte A.G., West Germany)	Pakistan
Cogelex	France

AWARDED AS FOLLOWS:

Contract C-25-12

Brown Boveri and Cie. — West Germany

Supply and erect 66/11-kv substations at Shahkot, Warburton, Sheikhupura, and Chiniot.

TABLE IC. CONSTRUCTION EQUIPMENT AND SUPPLIES
PURCHASED AGAINST
LETTER OF COMMITMENT DLF 391-10

FINAL TOTAL OF LETTER OF CREDIT 391-10	$795,000.00

CONSTRUCTION EQUIPMENT AND VEHICLE LIST
PURCHASED THROUGH R. E. B. WILLCOX

R.E.B. WILLCOX ORDER NUMBER	DESCRIPTION	SUPPLIER
Order No. 10	Vehicles and spare parts	General Motors Corporation
Order No. 11	Vehicles and spare parts	Willys-Overland
Order No. 12	Construction equipment F.W.D. trucks and equipment	Utility Equipment Company
Order No. 13	Vibrator	Viber Company
Order No. 14	Pumps	Gorman-Rupp
Order No. 15	Truck Tracks	Truck Track Sales
Order No. 16	Concrete Mixer	Kwik-Mix
Order No. 24	Spare parts	Utility Equipment Company
Order No. 109	Steel punches	Lewthwaite Machine Company
Order No. 110	Steel punches	Whitney Metal Tool Company
Order No. 112	Lineman's tools	International Standard Electric
Order No. 113	Spare parts	Utility Equipment Company
Order No. 114	Spare parts	General Motors Corporation
Order No. 115	Trucks	General Motors Corporation
	Fee	R. E. B. Willcox

TABLE II. 11-KV DISTRIBUTION CIRCUIT DATA BY SUBSTATION

Substation	Circuit	Const. Areas	Total Wells	11-kv Line Miles	400 Volt Line Miles	Distribution Trans-formers	Total HP Connected	Total KVA
Sukheki 106	106-A	S	42	21.350	3.460	34	1295	1400
	106B(G2)	G	45	29.530	6.190	29	1430	1750
	106C(G4)	H&P	30	9.580	1.340	26	910	1050
	106D(G3)	H	15	13.430	2.130	10	525	575
	106E(G5)	H&D	21	5.980	2.310	17	700	725
	106F(G6)	H&I	32	24.650	4.220	23	1000	1050
	106G(G7)	H&T	24	5.970	2.280	20	795	950
	106H	T	53	40.438	4.298	43	1725	1950
	106J	T,S&H	7	1.745	0.040	7	225	250
	106K	S	61	50.280	5.280	51	1730	2025
	106L	S&T	51	37.800	3.370	43	1550	1875
Sub-total			381	240.753	34.918	303	11885	13600
Mohlan 99	99C	-	-	-	-	-	-	-
	99G-B	A	6	4.376	0.344	5	170	175
	99E-F	A	20	3.341	2.371	15	540	725
	99D	N	30	24.340	3.680	20	860	875
Sub-total			56	32.057	6.395	40	1570	1775
Sheikhupura 102	102D	K&L	20	16.230	2.850	15	630	650
	102E	K&L	28	28.630	7.500	15	645	725
	102F	K&L	3	0.140	0.200	3	75	100
	102G	K&L	40	15.370	4.090	27	990	1200
Sub-total			91	60.370	14.640	60	2340	2675

Substation	Circuit	Const. Areas	Total Wells	11-kv Line Miles	400 Volt Line Miles	Distribution Trans-formers	Total HP Connected	Total KVA
Chiniot 117	117C	V&VI	28	28.850	0.690	23	830	1050
	117D	V&VI	20	12.400	1.100	19	655	1050
	117E	V&VI	36	29.120	1.890	32	1165	1650
	117F	-	-	-	-	-	-	-
	117G	-	-	-	-	-	-	-
Sub-total			84	70.370	3.680	74	2650	3750
Shahkot 101	101A(S5)	D&I	44	27.378	1.547	37	1055	1450
	101B(S4)	C	33	29.469	1.105	31	1010	1225
	101C(S3)	A&B	63	40.208	4.474	51	1610	2300
	101D(A2)	A,E&F	55	33.910	5.929	40	1555	1950
	101E	-	-	-	-	-	-	-
	101F(A7)	E&F	40	34.181	4.282	29	1065	1575
	101G(A1)	E&F	43	26.150	5.780	28	1280	1500
	101H	D,E,J&U	52	40.650	2.500	46	1935	2325
	101I(A6)	D,I&J	48	31.280	4.460	39	1550	2050
Sub-total			378	263.226	30.077	301	11060	14375
Bucheke 137	137E	W	41	37.941	2.055	35	980	1080
	137F	W	45	36.319	4.263	35	1300	1385
	137G	O	49	36.303	4.360	36	1460	1490
	137H	O	46	27.455	5.326	32	1315	1500
Sub-total			181	138.018	16.004	138	5055	5455

45

Substation	Circuit	Const. Areas	Total Wells	11-kv Line Miles	400 Volt Line Miles	Distribution Trans-formers	Total HP Connected	Total KVA
Warburton 103	103A	M-1	29	19.570	3.000	21	905	1000
	103C	M-1	42	31.300	5.000	30	1335	1475
	103D	M-2	52	31.000	6.000	35	1465	1675
	103E	M-2	1	0.900	-	1	40	50
	103F	M-2	41	32.320	2.300	34	1275	1400
	103G	M-1&B	44	34.436	6.006	33	1205	1500
Sub-total			209	149.526	22.306	154	6225	7100
Hafizabad 105	105C	Q	1	-	-	1	25	25
	105G	R	51	35.351	5.364	41	1530	1875
	105E	Q	3	-	-	3	120	150
	105D	Q	53	22.412	0.792	47	1770	1800
	105F	Q	42	26.672	6.520	32	1390	1675
	105H	R	56	34.545	3.218	47	1725	2050
	105K	R	54	36.404	5.368	42	1575	1925
	105I	City Feeder		-	-	-	-	-
Sub-total			260	155.384	21.262	213	8135	9500

Substation	Circuit	Const. Areas	Total Wells	11-kv Line Miles	400 Volt Line Miles	Distribution Trans-formers	Total HP Connected	Total KVA
Chuharkana 98	98A	-	-	-	-	-	-	-
	98C	-	-	-	-	-	-	-
	98D(C1)	B	29	23.777	1.547	24	930	1025
	98E(C2)	C	23	22.610	0.583	19	620	925
	98I(C5)	P&Q	57	37.588	7.350	45	1955	2075
	98H(C6)	P	46	32.396	4.979	35	1485	1425
Sub-total			155	116.371	14.459	123	4990	5450
Grand Total			1795*	1226.075	163.741	1406	53910	63680

Note: Loading shown is for that added by the project construction.
* Tubewell SK 234-A, Shahkot Scheme not completed.

TABLE III. DISTRIBUTION TRANSFORMERS CONNECTED

Circuit Designation	15 KVA	25 KVA	50 KVA	75 KVA	100 KVA
	BUCHEKE SUBSTATION				
137-E	12	13	8	1	1
137-F	4	14	12	5	-
137-G	6	11	12	7	-
137-H	-	10	16	6	-
Sub-total	22	48	48	19	1
	CHINIOT SUBSTATION				
117-C	-	12	3	8	-
117-D	-	7	1	11	-
117-E	-	13	4	15	-
117-F	-	-	-	-	-
117-G	-	-	-	-	-
Sub-total	-	32	8	34	-
	CHUHARKANA SUBSTATION				
98-A	-	-	-	-	-
98-C	-	-	-	-	-
98-D	-	10	11	3	-
98-E	-	5	10	4	-
98-H	-	18	12	5	-
98-I	-	21	11	12	1
Sub-total	-	54	44	24	1

Circuit Designation	15 KVA	25 KVA	50 KVA	75 KVA	100 KVA
		HAFIZABAD SUBSTATION			
105-C	-	1	-	-	-
105-D	-	25	19	3	-
105-E	-	-	3	-	-
105-F	-	7	18	4	3
105-G	-	13	23	4	1
105-H	-	17	25	5	-
105-I	-	-	-	-	-
105-K	-	16	20	3	3
Sub-total	-	79	108	19	7
		MOHLAN SUBSTATION			
99-C	-	-	-	-	-
99-D	-	9	7	4	-
99-E-F	-	5	7	2	1
99-G-B	-	3	2	-	-
Sub-total	-	17	16	6	1

Circuit Designation	15 KVA	25 KVA	50 KVA	75 KVA	100 KVA
		SHAHKOT SUBSTATION			
101-A	-	20	13	4	-
101-B	-	15	14	2	-
101-C	-	20	22	8	1
101-D	-	17	8	15	-
101-E	-	-	-	-	-
101-F	-	12	1	15	1
101-G	-	9	6	13	-
101-H	-	12	21	13	-
101-I	-	16	3	20	-
Sub-total	-	121	88	90	2
		SHEIKHUPURA SUBSTATION			
102-D	-	7	6	1	1
102-E	-	4	8	3	-
102-F	-	2	1	-	-
102-G	-	10	13	4	-
Sub-total	-	23	28	8	1

Circuit Designation	15 KVA	25 KVA	50 KVA	75 KVA	100 KVA
		SUKHEKI SUBSTATION			
106-A	-	13	20	1	-
106-B	-	10	-	16	3
106-C	-	11	14	1	-
106-D	-	2	4	3	1
106-E	-	7	8	2	-
106-F	-	11	6	5	1
106-G	-	8	6	6	-
106-H	-	17	17	9	-
106-J	-	4	3	-	-
106-K	-	28	17	5	1
106-L	-	21	12	10	-
Sub-total	-	132	107	58	6
		WARBURTON SUBSTATION			
103-A	-	6	12	2	1
103-C	-	9	15	4	2
103-D	-	11	17	6	1
103-E	-	-	1	-	-
103-F	-	20	9	2	3
103-G	-	11	17	5	-
Sub-total	-	57	71	19	7
TOTAL	22	563	518	277	26

TABLE IV. NUMBER OF TUBEWELLS BY SCHEME

Circuit Designation	Beranwala	Hafizabad	Harse Sheikh	Khangah Dogran	Sangla Hill	Shadman	Shahkot	Zafarwal	Total T/W On Circuit	KVA Connected To Circuit
				BUCHEKE SUBSTATION						
137-E								41	41	1,080
137-F								45	45	1,385
137-G								49	49	1,490
137-H								46	46	1,500
								Sub-total	181	5,455
				CHINIOT SUBSTATION						
117-C	10		18						28	1,050
117-D	8		12						20	1,050
117-E	22		14						36	1,650
117-F									--	--
117-G									--	--
								Sub-total	84	3,750
				CHUHARKANA SUBSTATION						
98-A									--	--
98-C									--	--
98-D							29		29	1,025
98-E							23		23	925
98-H				46					46	1,425
98-I				57					57	2,075
								Sub-total	155	5,450

Circuit Designation	Beranwala	Hafizabad	Harse Sheikh	Khangah Dogran	Sangla Hill	Shadman	Shahkot	Zafarwal	Total T/W On Circuit	KVA Connected To Circuit
				HAFIZABAD SUBSTATION						
105-C				1					1	25
105-D				53					53	1,800
105-E				3					3	150
105-F				42					42	1,675
105-G		51							51	1,875
105-H		56							56	2,050
105-I									--	--
105-K		54							54	1,925
								Sub-total	260	9,500
				MOHLAN SUBSTATION						
99-C									--	--
99-D								30	30	875
99-E-F							20		20	725
99-G-B							6		6	175
								Sub-total	56	1,775

Circuit Designation	Beranwala	Hafizabad	Harse Sheikh	Khangah Dogran	Sangla Hill	Shadman	Shahkot	Zafarwal	Total T/W On Circuit	KVA Connected To Circuit
					SHAHKOT SUBSTATION					
101-A					10		34		44	1,450
101-B							33		33	1,225
101-C							63		63	2,300
101-D							55		55	1,950
101-E									--	--
101-F							40		40	1,575
101-G					18		25		43	1,500
101-H	20				20		12		52	2,325
101-I					35		13		48	2,050
								Sub-total	378	14,375
					SHEIKHUPURA SUBSTATION					
102-D						20			20	650
102-E						28			28	725
102-F						3			3	100
102-G						40			40	1,200
								Sub-total	91	2,675

54

Circuit Designation	Beranwala	Hafizabad	Harse Sheikh	Khangah Dogran	Sangla Hill	Shadman	Shahkot	Zafarwal	Total T/W On Circuit	KVA Connected To Circuit
					SUKHEKI SUBSTATION					
106-A		42							42	1,400
106-B					45				45	1,750
106-C				7	23				30	1,050
106-D					15				15	575
106-E					20		1		21	725
106-F					32				32	1,050
106-G	9				15				24	950
106-H	53								53	1,950
106-J	3	4							7	250
106-K		61							61	2,025
106-L	1	50							51	1,875
								Sub-total	381	13,600
					WARBURTON SUBSTATION					
103-A								29	29	1,000
103-C								42	42	1,475
103-D								52	52	1,675
103-E								1	1	50
103-F								41	41	1,400
103-G							30	14	44	1,500
								Sub-total	209	7,100
TOTAL	126	318	44	209	233	91	384*	390	1,795	63,680

* Tubewell SK 234-A, Shahkot Scheme not completed. Distribution facilities removed.

55

TABLE V. PUMP MOTORS CONNECTED

Circuit Designation	15 HP	20 HP	25 HP	30 HP	40 HP	50 HP	60 HP
			BUCHEKE SUBSTATION				
137-E	4	13	16	6	2	-	-
137-F	4	10	8	8	15	-	-
137-G	-	14	14	4	15	1	1
137-H	-	9	17	9	11	-	-
Sub-total	8	46	55	27	43	1	1
			CHINIOT SUBSTATION				
117-C	5	3	7	2	9	2	-
117-D	1	3	2	5	7	2	-
117-E	2	4	7	7	13	3	-
117-F	-	-	-	-	-	-	-
117-G	-	-	-	-	-	-	-
Sub-total	8	10	16	14	29	7	-
			CHUHARKANA SUBSTATION				
98-A	-	-	-	-	-	-	-
98-C	-	-	-	-	-	-	-
98-D	-	4	-	20	-	5	-
98-E	-	11	-	10	-	2	-
98-H	-	-	21	12	5	8	-
98-I	-	-	15	22	8	12	-
Sub-total	-	15	36	64	13	27	-

Circuit Designation	15 HP	20 HP	25 HP	30 HP	40 HP	50 HP	60 HP
			HAFIZABAD SUBSTATION				
105-C	-	-	1	-	-	-	-
105-D	-	1	18	14	12	8	-
105-E	-	-	-	-	3	-	-
105-F	-	5	10	5	21	1	-
105-G	-	9	8	21	13	-	-
105-H	2	6	7	26	13	2	-
105-I	-	-	-	-	-	-	-
105-K	1	11	12	18	10	2	-
Sub-total	3	32	56	84	72	13	-
			MOHLAN SUBSTATION				
99-C	-	-	-	-	-	-	-
99-D	-	7	8	8	7	-	-
99-E-F	-	7	10	-	-	3	-
99-G-B	-	1	-	5	-	-	-
Sub-total	-	15	18	13	7	3	-
			SHAHKOT SUBSTATION				
101-A	-	26	5	12	-	1	-
101-B	-	6	-	23	-	4	-
101-C	-	34	-	26	-	3	-
101-D	1	26	-	19	-	9	-
101-E	-	-	-	-	-	-	-

Circuit Designation	15 HP	20 HP	25 HP	30 HP	40 HP	50 HP	60 HP
			SHAHKOT SUBSTATION - Continued				
101-F	5	14	-	17	-	4	-
101-G	-	13	4	18	3	4	1
101-H	-	4	7	14	13	10	4
101-I	-	6	12	15	8	6	1
Sub-total	6	129	28	144	24	41	6
			SHEIKHUPURA SUBSTATION				
102-D	-	5	2	6	5	2	-
102-E	5	14	-	7	2	-	-
102-F	1	1	-	-	1	-	-
102-G	6	14	-	18	2	-	-
Sub-total	12	34	2	31	10	2	-
			SUKHEKI SUBSTATION				
106-A	-	13	3	9	16	1	-
106-B	-	-	22	13	4	3	3
106-C	-	1	16	6	4	3	-
106-D	-	-	7	1	4	2	1
106-E	-	-	8	6	4	2	1
106-F	-	-	18	6	4	3	1
106-G	-	1	9	7	3	2	2
106-H	-	5	13	17	11	7	-
106-J	-	-	3	1	3	-	-

TABLE VI. SUMMARY OF LINE MILES BY MATERIAL SOURCE BY SUBSTATION

SUBSTATION	PRIMARY COPPER IN MILES *	SECONDARY COPPER IN MILES *	PRIMARY ACSR IN MILES **	SECONDARY ACSR IN MILES **
Sukheki	52.400	9.660	188.357	25.258
Shahkot	137.795	8.591	123.431	21.486
Chuharkana	46.387	2.130	69.984	12.329
Warburton	24.276	2.906	125.150	19.400
Hafizabad	3.695	-	151.689	21.261
Chiniot	-	-	70.370	3.680
Mohlan	7.717	2.715	24.340	3.680
Bucheke	15.604	-	122.414	16.004
Sheikhupura	-	-	60.370	14.640
TOTAL	287.874	26.002	936.105	137.740

* Total Line Miles constructed with locally available materials - 313.876 Miles

** Total Line Miles constructed with materials purchased with Loan funds. - 1073.844 Miles

Circuit Designation	15 HP	20 HP	25 HP	30 HP	40 HP	50 HP	60 HP
			SUKHEKI SUBSTATION - Continued				
106-K	5	16	5	20	14	1	-
106-L	-	10	10	15	15	1	-
Sub-total	5	46	114	101	82	25	8
			WARBURTON SUBSTATION				
103-A	-	8	3	7	9	2	-
103-C	-	9	11	6	12	2	2
103-D	6	5	17	11	13	-	-
103-E	-	-	-	-	1	-	-
103-F	9	5	-	14	5	6	2
103-G	-	18	1	21	1	3	-
Sub-total	15	45	32	59	41	13	4
TOTAL	57	372	357	537	321	132	19

57 x 15 = 855
372 x 20 = 7,440
357 x 25 = 8,925
537 x 30 = 16,110
321 x 40 = 12,840
132 x 50 = 6,600
19 x 60 = 1,140

TOTAL 53,910 HP

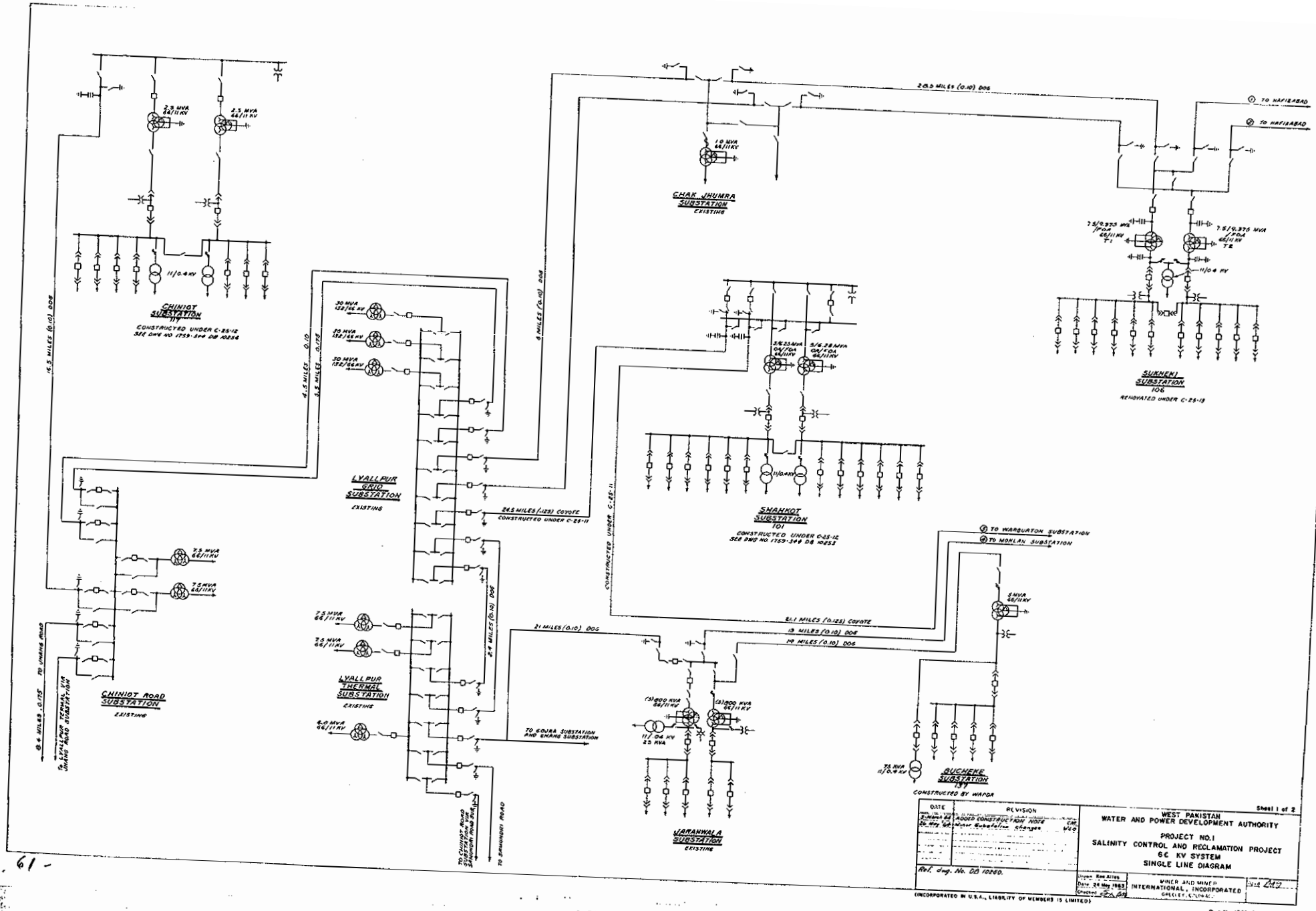

BEST AVAILABLE COPY

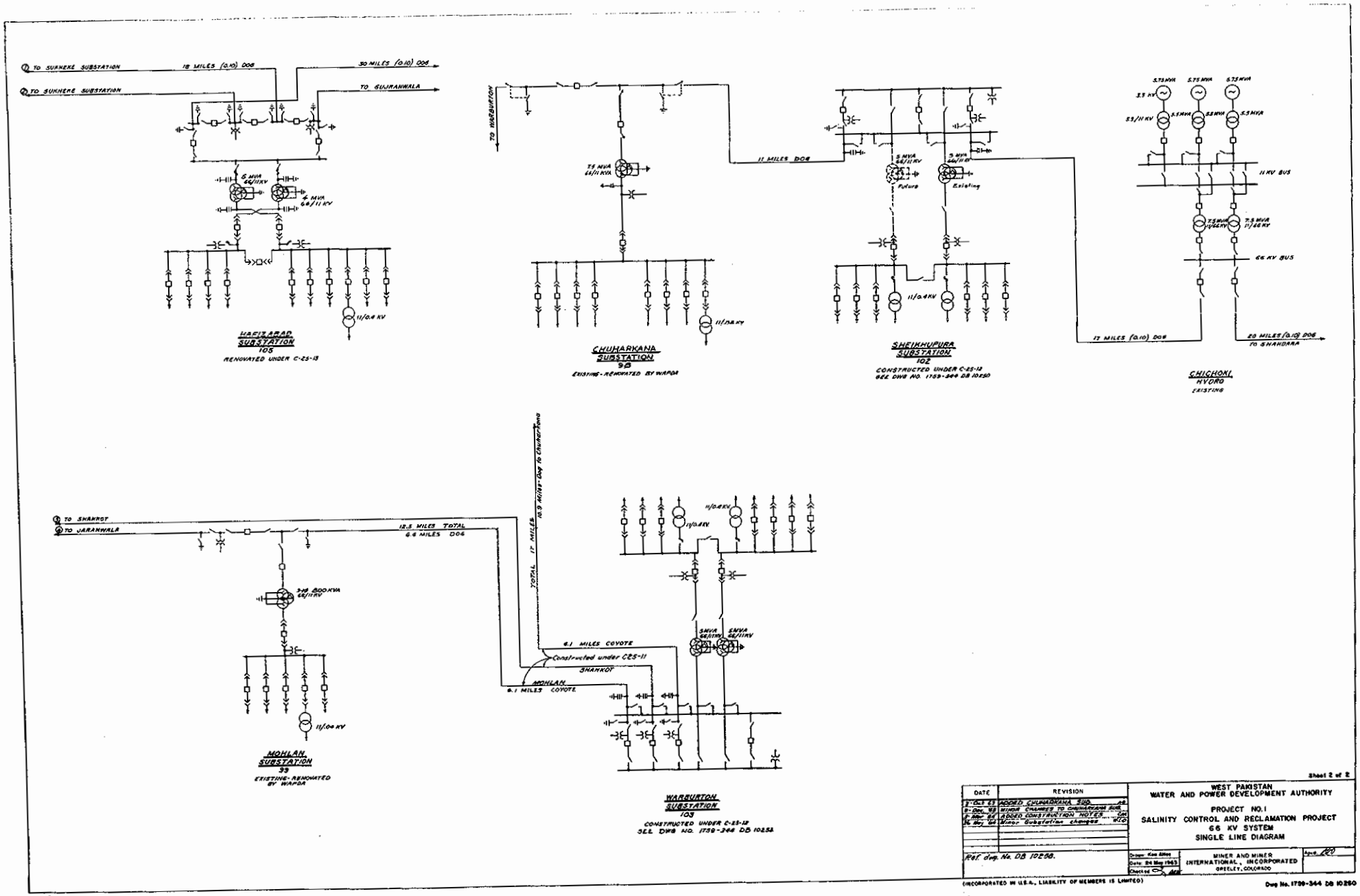

-62-

BEST AVAILABLE COPY

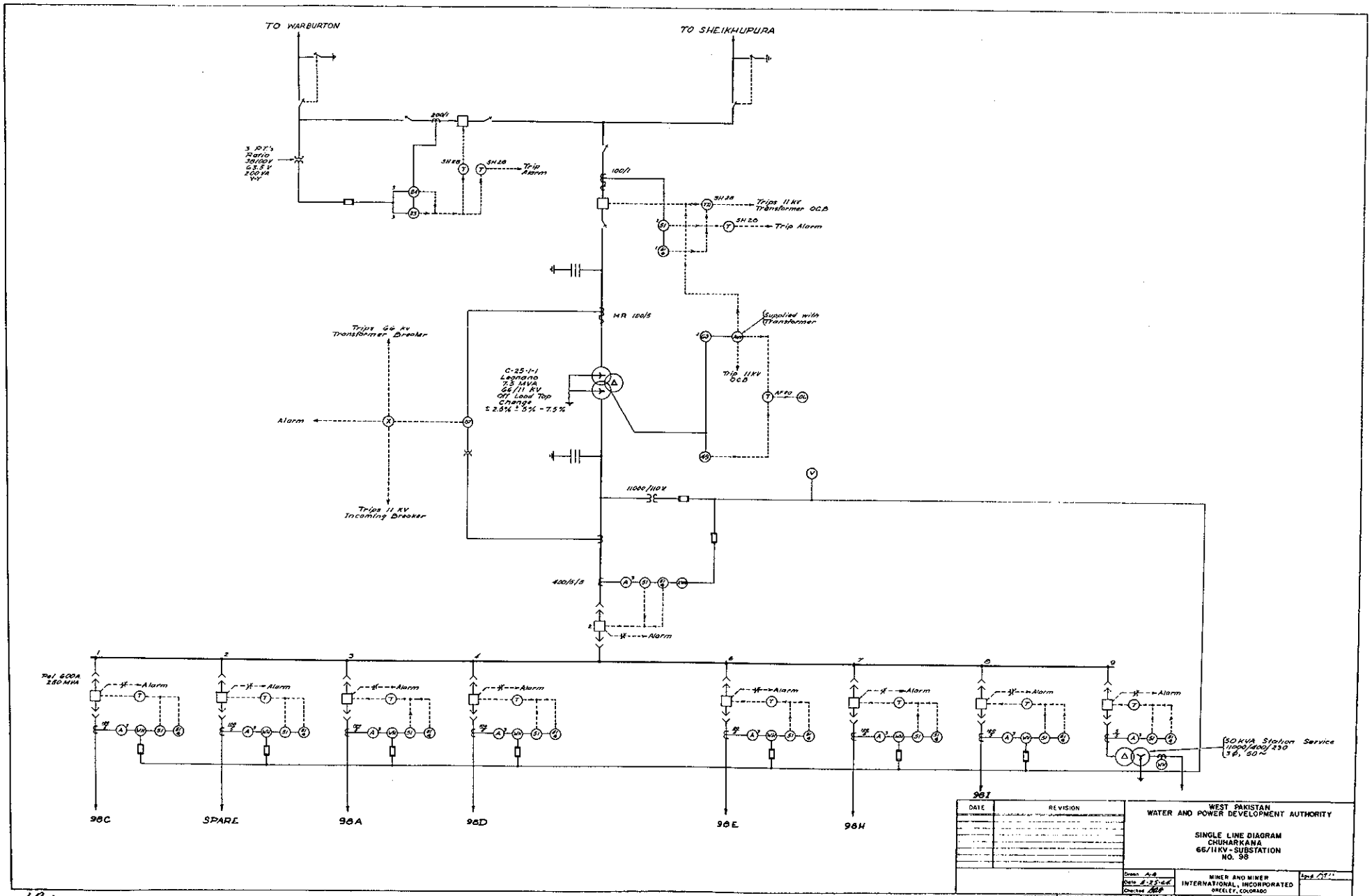

DATE	REVISION

WEST PAKISTAN
WATER AND POWER DEVELOPMENT AUTHORITY

SINGLE LINE DIAGRAM
CHUHARKANA
66/11KV-SUBSTATION
NO. 98

Drawn A.G.
Date 8-25-66
Checked

MINER AND MINER INTERNATIONAL, INCORPORATED
GREELEY, COLORADO

Spec PT

(INCORPORATED IN U.S.A., LIABILITY OF MEMBERS IS LIMITED)

Dwg No. 1759-344 08-10277

BEST AVAILABLE COPY

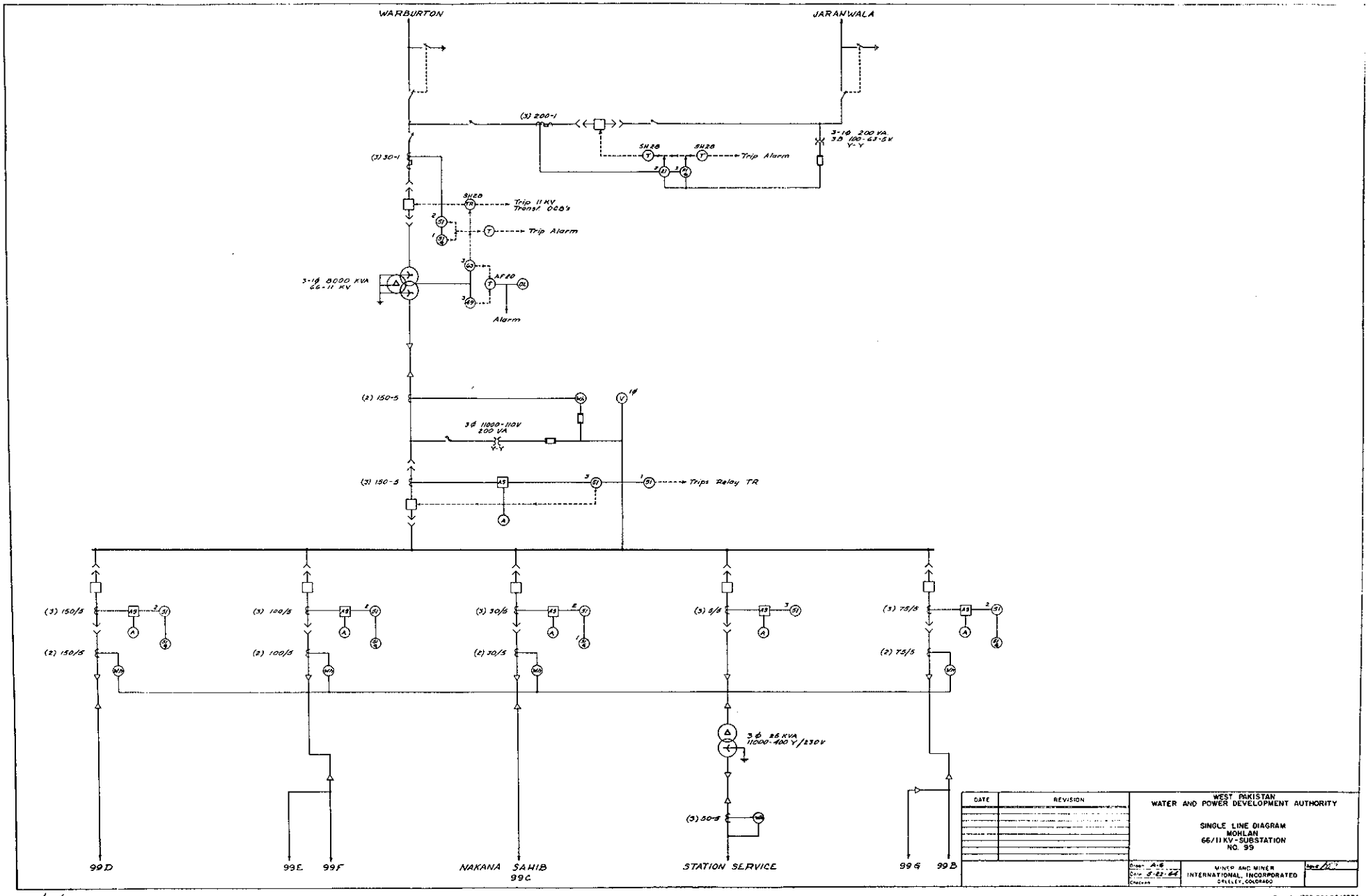

Dwg No 1759-544 DB 10274

-64-

BEST AVAILABLE COPY

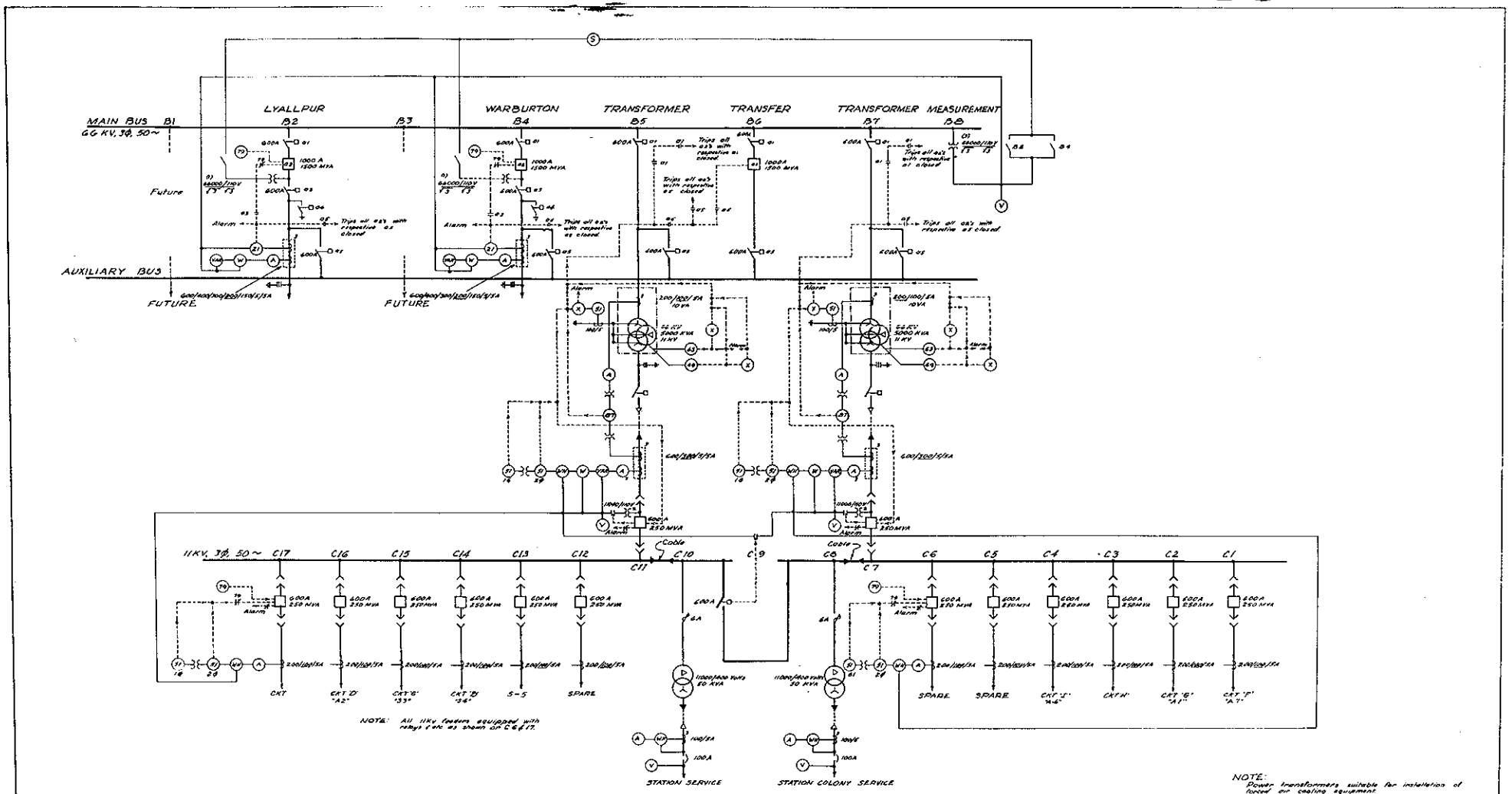

Dwg. No. 1739-344 DB 10267

-65

BEST AVAILABLE COPY

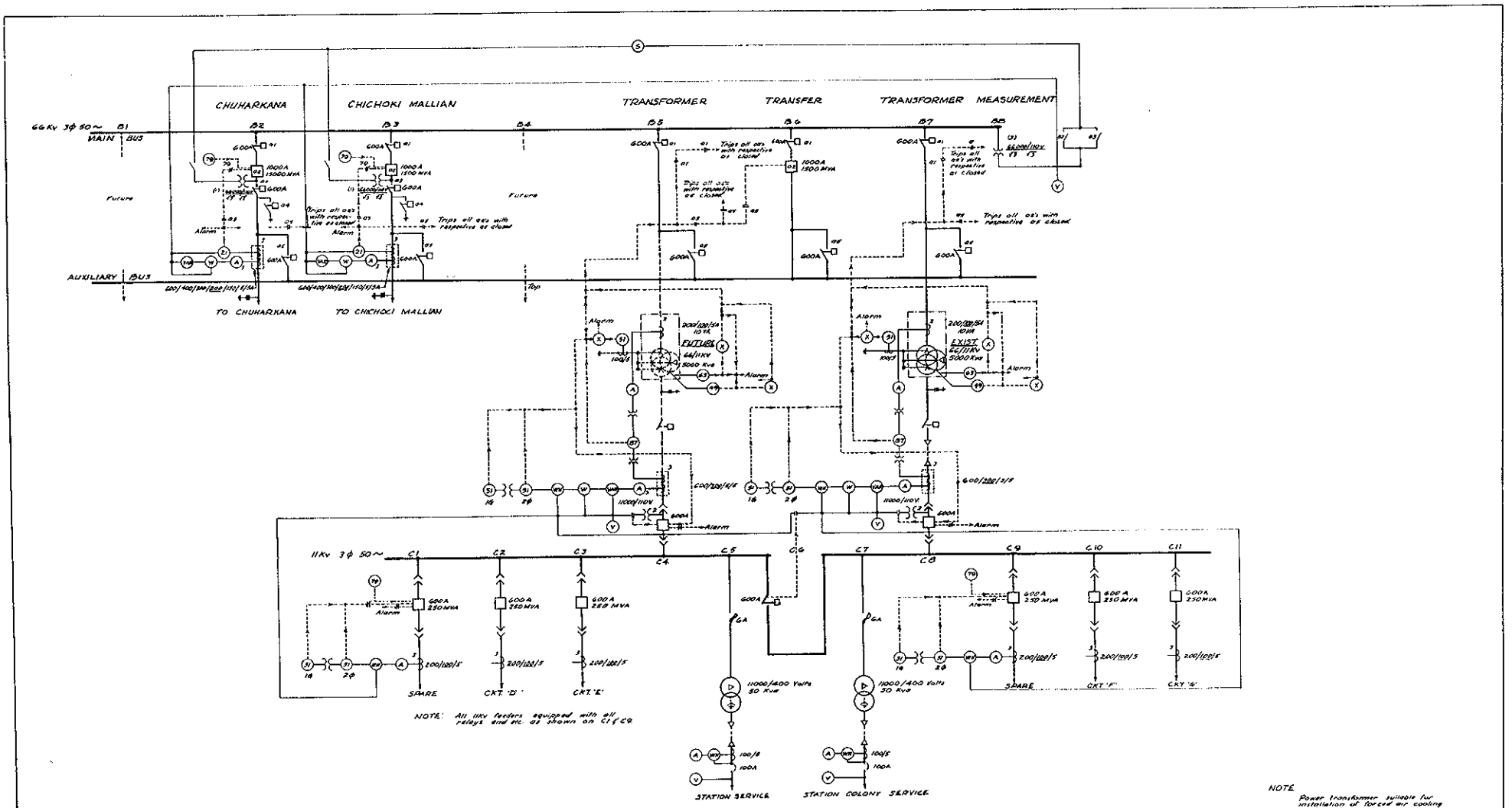

BEST AVAILABLE COPY

DATE	REVISION

WEST PAKISTAN
WATER AND POWER DEVELOPMENT AUTHORITY

SINGLE LINE DIAGRAM
SHEIKHUPURA
66/11 KV- SUBSTATION
NO. 102

Drawn A.H.
Date 25 Sept '63
Checked

MINER AND MINER
INTERNATIONAL, INCORPORATED
GREELEY, COLORADO

Dwg. No. 1759-344 DB 10269

66.

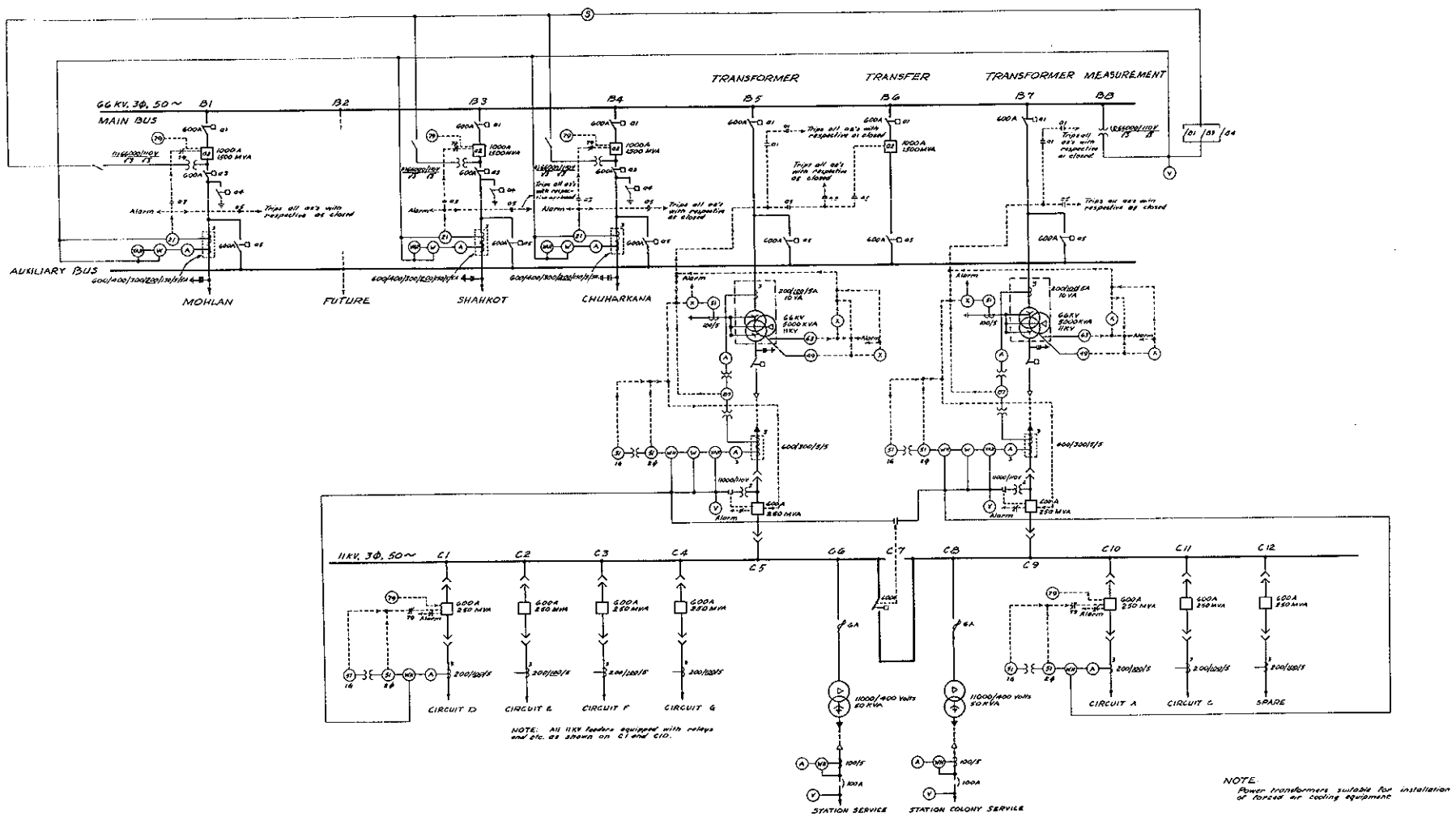

BEST AVAILABLE COPY

DATE	REVISION

WEST PAKISTAN
WATER AND POWER DEVELOPMENT AUTHORITY

SINGLE LINE DIAGRAM
WARBURTON
66/11 KV - SUBSTATION
NO. 103

MINER AND MINER
INTERNATIONAL, INCORPORATED
GREELEY, COLORADO

Dwg. No. 1759-344 DB 10268

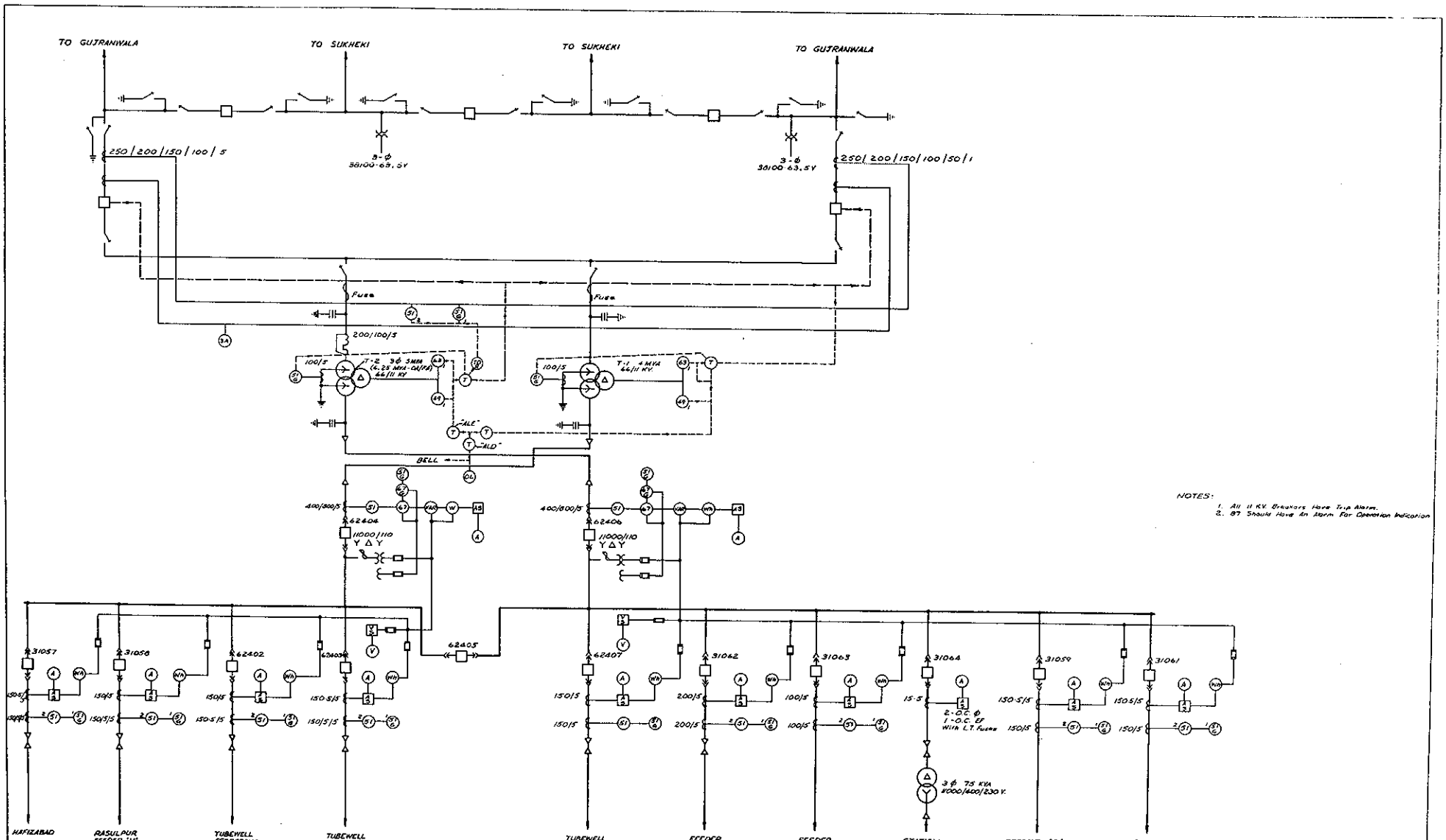

NOTES:
1. All 11 KV. Breakers Have Trip Alarm.
2. 87 Should Have An Alarm For Operation Indication

DATE	REVISION

WEST PAKISTAN
WATER AND POWER DEVELOPMENT AUTHORITY

SINGLE LINE DIAGRAM
HAFIZABAD
66/11 KV-SUBSTATION
NO. 105

Drawn F. O'Neill
Date 28 May 68
Checked [illegible]

MINER AND MINER
INTERNATIONAL, INCORPORATED
GREELEY, COLORADO

Spec. [illegible]

(INCORPORATED IN U.S.A., LIABILITY OF MEMBERS IS LIMITED)

Dwg. No. 1759-344 08 10276

BEST AVAILABLE COPY

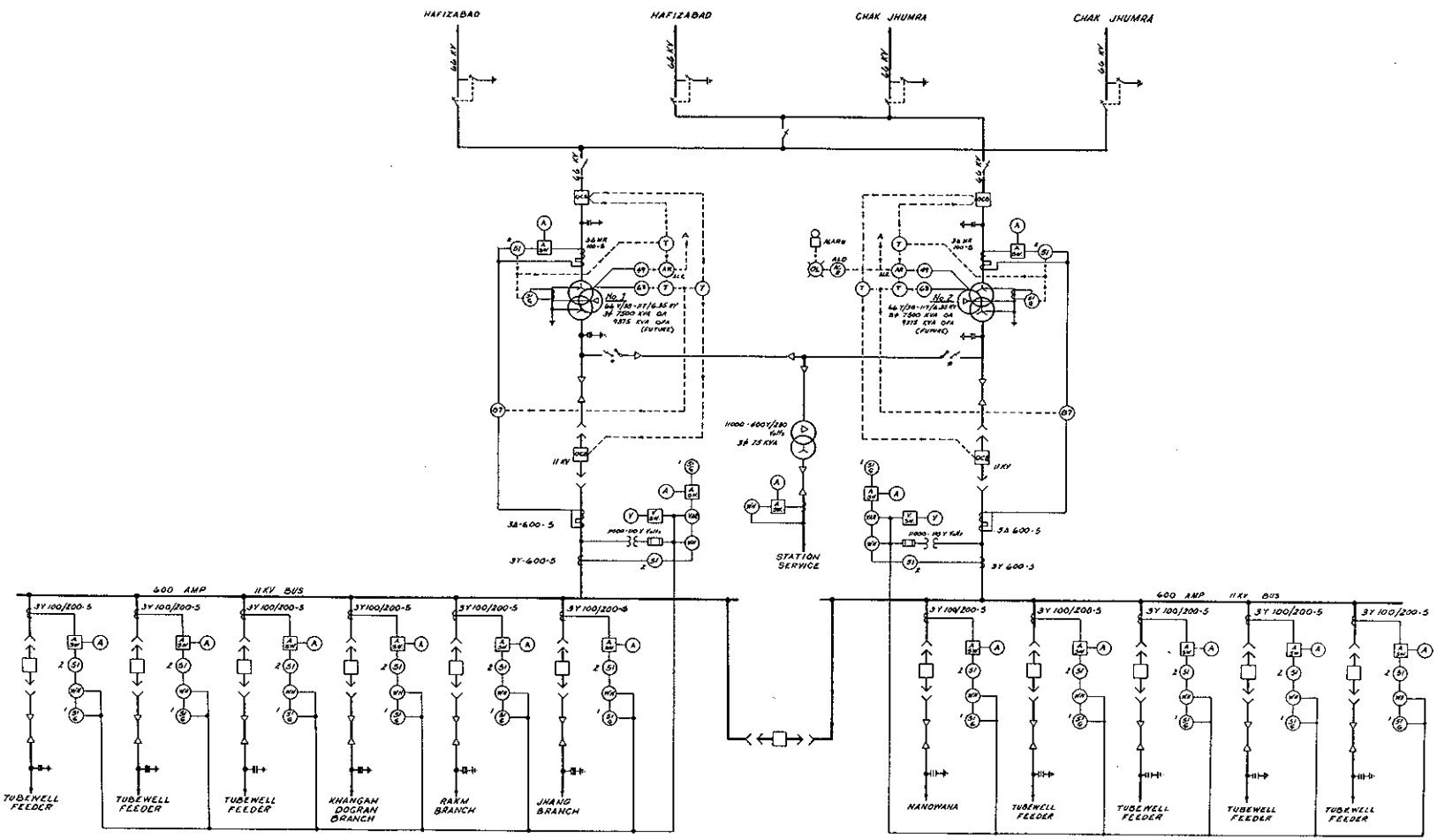

NOTE:
All 11 KV Breakers are to have Trip Alarms.

* Interlock station service switch-fuse operating mechanism to prevent both being closed at the same time. ("Toplin" switch fuse to be furnished by WAPDA.)

(AR) (Z) Mounted in same cabinet.

BEST AVAILABLE COPY

DATE	REVISION

WEST PAKISTAN
WATER AND POWER DEVELOPMENT AUTHORITY

SINGLE LINE DIAGRAM
SUKHEKI
66/11 KV-SUBSTATION
NO. 106

Drawn GKD
Date 25 May 64
Checked GKD

MINER AND MINER
CONSULTING ENGINEERS, INCORPORATED
GREELEY, COLORADO

INCORPORATED IN USA., LIABILITY OF MEMBERS IS LIMITED

Dwg No 1759-344 D 10275

69

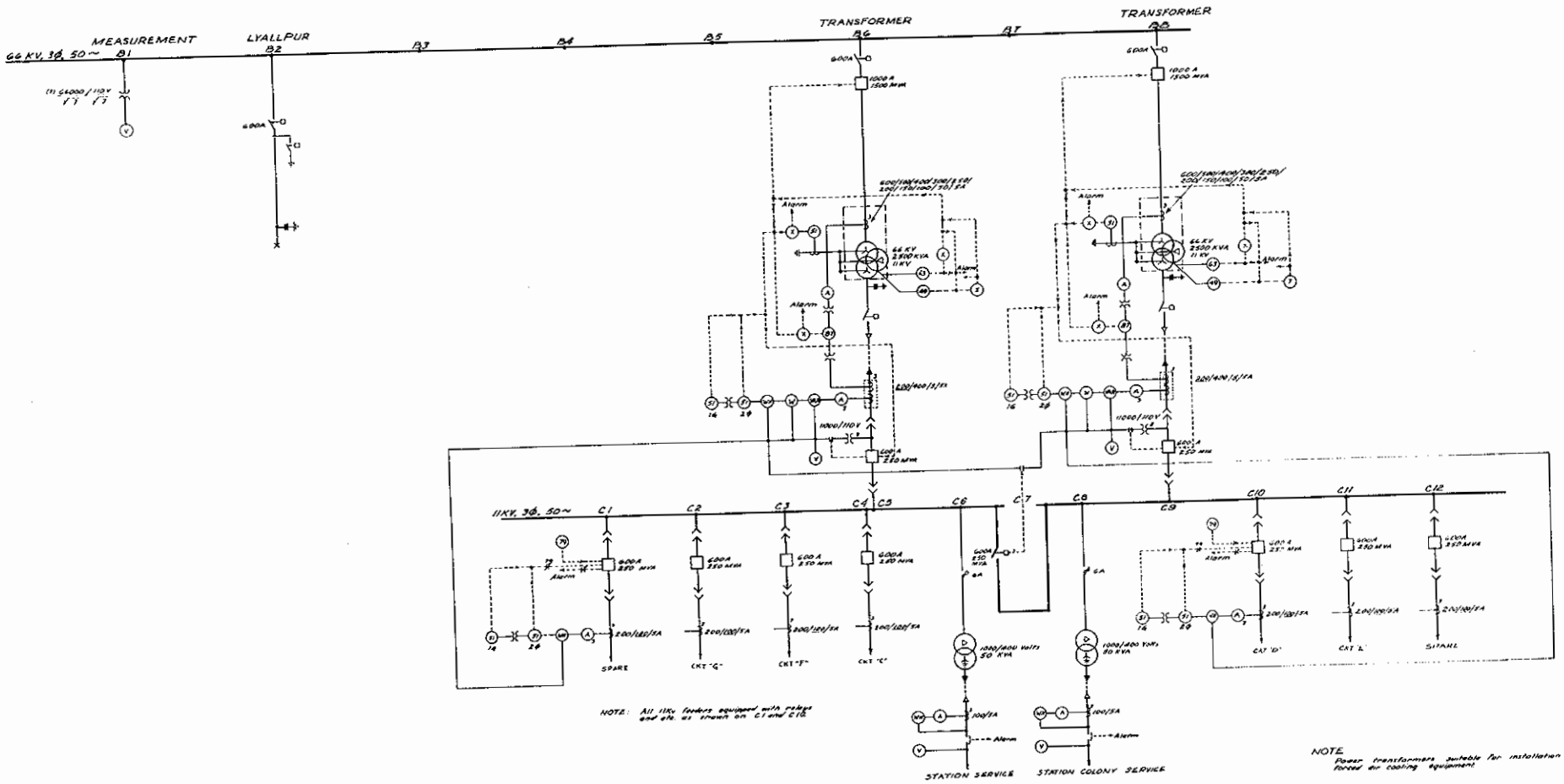

DATE	REVISION
5-4-66	Rev. to show Service changes

WEST PAKISTAN
WATER AND POWER DEVELOPMENT AUTHORITY

SINGLE LINE DIAGRAM
CHINIOT
66/11 KV SUBSTATION
NO. 117

Drawn A.G.
Date 25 Sept '65
Checked

MINER AND MINER
INTERNATIONAL, INCORPORATED
GREELEY, COLORADO

Sheet 1 of 1

Dwg No. 1739-344 DB 10270

BEST AVAILABLE COPY

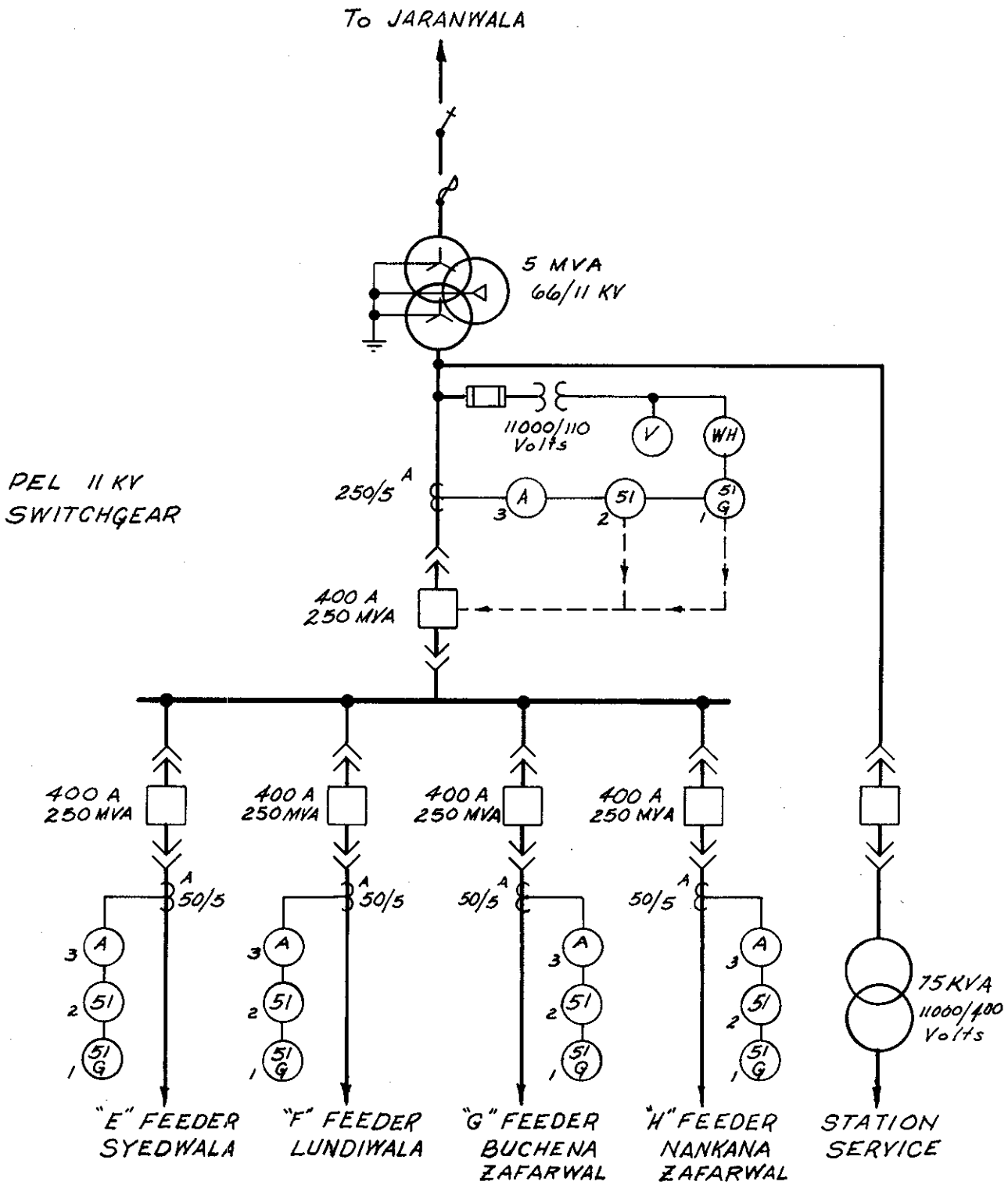

DATE	REVISION

WEST PAKISTAN
WATER AND POWER DEVELOPMENT AUTHORITY

SINGLE LINE DIAGRAM
BUCHEKE SUBSTATION

Dwn: [illegible]
Date: 26 May '64
Ckd: [illegible]

MINER AND MINER
INTERNATIONAL, INCORPORATED
GREELEY, COLORADO

Apvd:

(INCORPORATED IN USA., LIABILITY OF MEMBERS IS LIMITED) 1759-344 A 10279

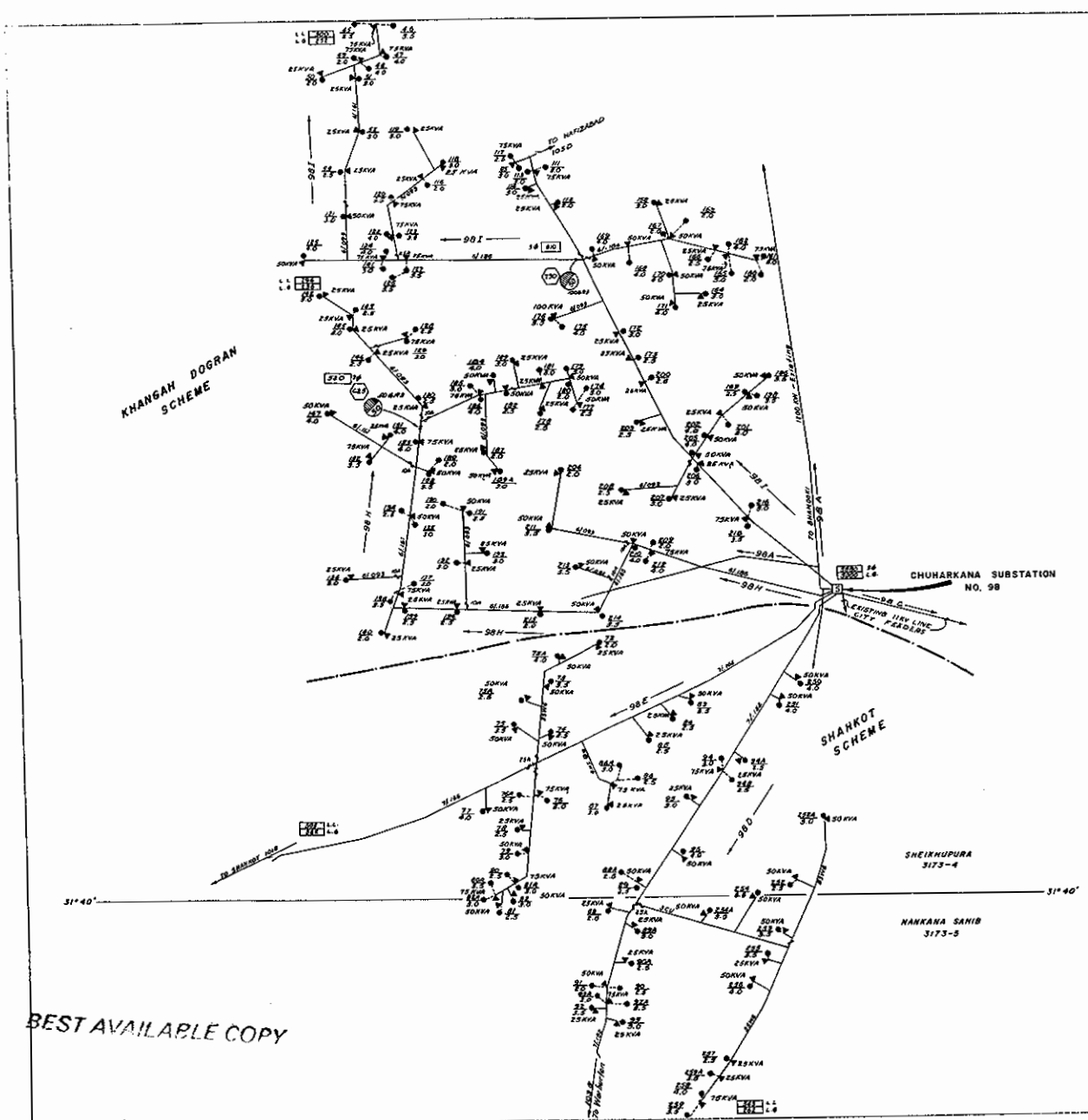

N

SCALE 1/2" = 1 Mile

0 1 2 3 Miles

SYMBOL LEGEND

1. SUBSTATION
2. TUBEWELL. NUMBER / DISCHARGE
3. TRANSFORMER
4. LINE FUSE NORMALLY OPEN.
5. LINE FUSE NORMALLY CLOSED.
6. 3-GANG POLE TOP SWITCH - NORMALLY OPEN
7. 3-GANG POLE TOP SWITCH - NORMALLY CLOSED.
8. 3-GANG FUSED POLE TOP SWITCH - NORMALLY OPEN.
9. 3-GANG FUSED POLE TOP SWITCH - NORMALLY CLOSED.
10. 3-PHASE OIL CIRCUIT RECLOSER — Current rating 50-GRS-Type
11. FAULT CURRENT - AMPS (3Ø - THREE PHASE, L.L. - LINE TO LINE, L.G. - LINE TO GROUND).
12. CONNECTED TRANSFORMER CAPACITY - KVA.

CHUHARKANA GRID STATION NO. 98

FEEDER	11KV LINE MILES 6/186 ACSR	6/161 ACSR	6/093 ACSR	7/152 CU.	7/166 CU.	3.5WG CU.	8SWG CU.	TOTAL	400 VOLT LINE MILES 6/186 ACSR	6/161 ACSR	6/093 ACSR	7/130 CU.	TOTAL	WELLS
D				9.431		9.051	5.295	23.777				1.847	1.847	29
E					11.27	5.350	5.990	22.610				0.583	0.583	28
I	18.186	11.336	7.846					37.368	1.553	5.897			7.350	37
H	8.333	6.333	17.708					32.396	0.417	4.062	0.50		4.979	46
TOTAL	26.519	17.911	25.554	9.431	11.27	14.401	11.285	116.871	1.770	10.059	0.50	2.130	14.459	133
98A / 98C	EXISTING FEEDERS													

DATE	REVISION	
1-mar-64	Minor Corrections	CM

WEST PAKISTAN
WATER AND POWER DEVELOPMENT AUTHORITY
TUBEWELL ELECTRICAL DISTRIBUTION
LAYOUT 11KV 3 PHASE

CIRCUIT DIAGRAM — CHUHARKANA SUBSTATION NO. 98

Date 8-5-63

MINER AND MINER INTERNATIONAL, INCORPORATED

(INCORPORATED IN USA LIABILITY OF MEMBERS IS LIMITED)

1759-345080 10264

BEST AVAILABLE COPY

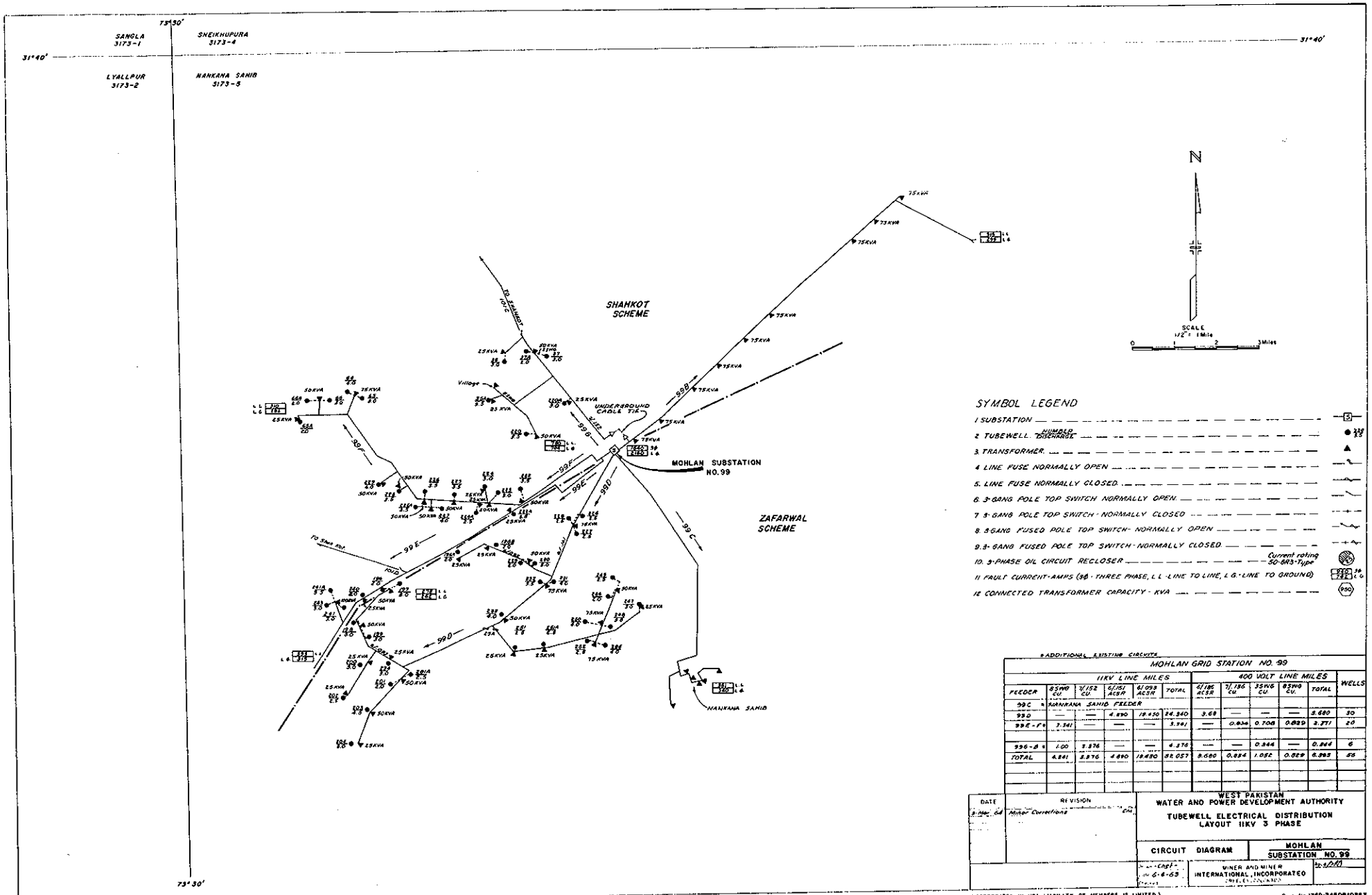

* ADDITIONAL EXISTING CIRCUITS

MOHLAN GRID STATION NO. 99

FEEDER	11KV LINE MILES 8SWG CU.	7/.152 CU.	6/.151 ACSR	6/.093 ACSR	TOTAL	400 VOLT LINE MILES 6/.186 ACSR	7/.136 CU.	3SWG CU.	8SWG CU.	TOTAL	WELLS
99C * NANKANA SAHIB FEEDER											
99D	—	—	4.890	19.450	24.340	3.68	—	—	—	3.680	30
99E-1 *	3.341	—	—	—	3.341	—	0.834	0.708	0.829	2.371	20
99G-8 *	1.00	3.376	—	—	4.376	—	—	0.344	—	0.344	6
TOTAL	4.841	3.376	4.890	19.450	32.057	3.680	0.834	1.052	0.829	6.395	56

DATE	REVISION	
5-Mar. 68	Minor Corrections	

WEST PAKISTAN
WATER AND POWER DEVELOPMENT AUTHORITY

TUBEWELL ELECTRICAL DISTRIBUTION
LAYOUT 11KV 3 PHASE

CIRCUIT DIAGRAM | MOHLAN SUBSTATION NO. 99

Chief Engr. 6-6-69

MINER AND MINER INTERNATIONAL, INCORPORATED

(INCORPORATED IN USA LIABILITY OF MEMBERS IS LIMITED)

Dwg No 1759-3450810283

BEST AVAILABLE COPY

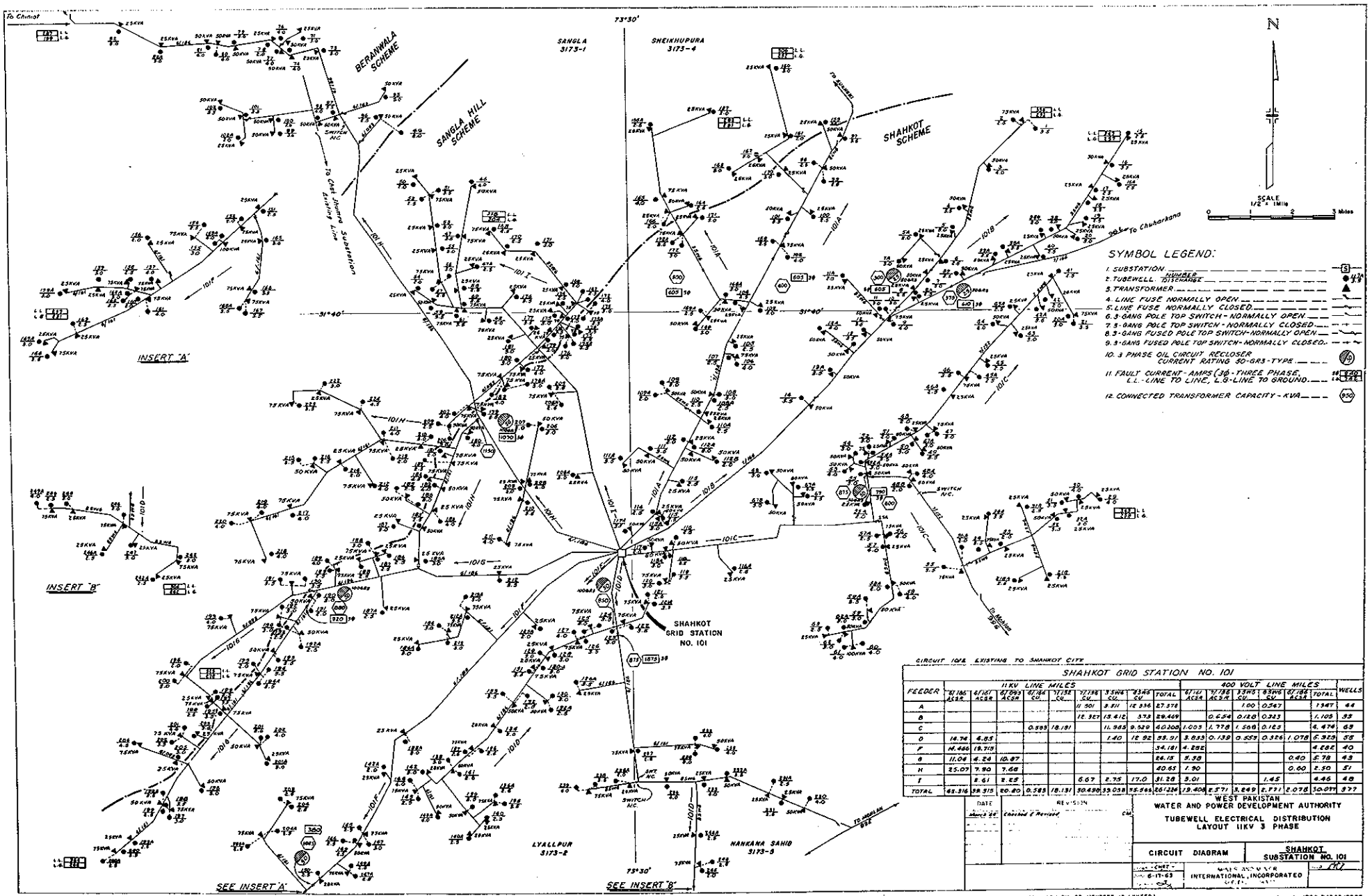

CIRCUIT 101E EXISTING TO SHAHKOT CITY

SHAHKOT GRID STATION NO. 101

FEEDER	11KV LINE MILES 6/1.186 ACSR	6/1.67 ACSR	6/2.993 ACSR	6/.184 CU	7/.136 CU	7/.196 CU	3.5MM CU	6.5MM CU	TOTAL	400 VOLT LINE MILES 6/1.67 ACSR	7/.136 ACSR	3.5MM CU	6.5MM CU	6/.184 ACSR	TOTAL	WELLS
A						11.501	3.811	12.336	27.378			1.00	0.547		1.547	44
B						12.327	13.412	3.73	29.469		0.654	0.120	0.323		1.105	93
C				0.585	18.181		11.985	9.539	40.308	1.003	1.778	1.560	0.133		4.474	63
D	14.74	4.85					1.40	12.92	33.91	3.835	0.139	0.559	0.326	1.078	5.929	58
F	14.466	19.715							34.181	4.282					4.282	40
G	11.04	4.24	10.87						26.15	3.38				0.40	3.78	43
H	25.07	7.90	7.68						40.65	1.90				0.60	2.50	51
I		2.61	2.63			5.67	2.75	17.0	31.28	3.01			1.45		4.46	48
TOTAL	65.316	38.315	20.80	0.585	18.181	30.498	33.038	55.566	261.286	19.408	2.571	3.249	2.771	2.078	30.077	377

DATE	REVISION
March 66	Checked & Revised

WEST PAKISTAN
WATER AND POWER DEVELOPMENT AUTHORITY
TUBEWELL ELECTRICAL DISTRIBUTION
LAYOUT 11KV 3 PHASE

CIRCUIT DIAGRAM — SHAHKOT SUBSTATION NO. 101

CHECKED 6-17-63 — WEST PAKISTAN INTERNATIONAL, INCORPORATED

(INCORPORATED IN USA LIABILITY OF MEMBERS IS LIMITED)

1789-34508 10266

BEST AVAILABLE COPY

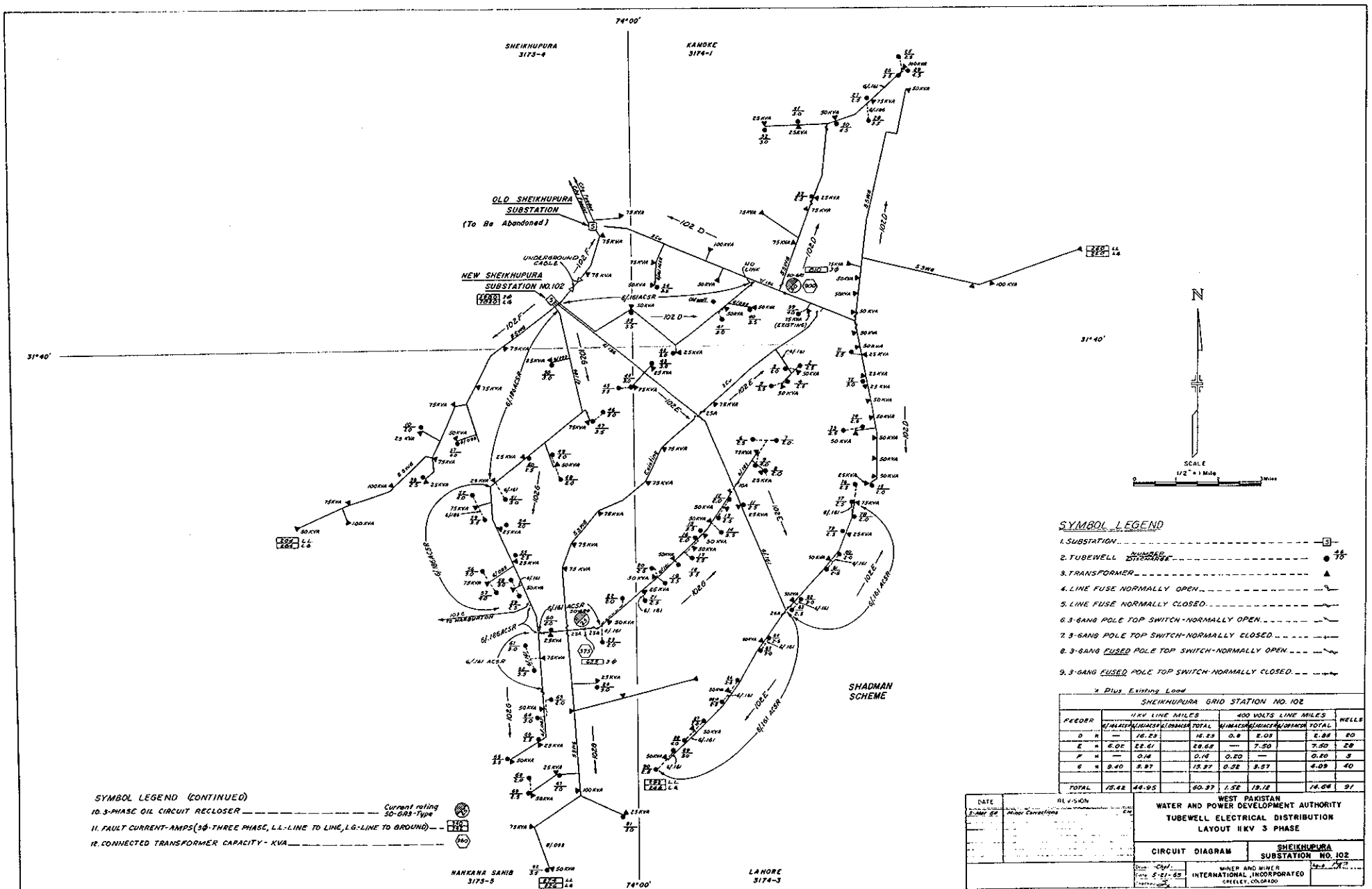

SHEIKHUPURA GRID STATION NO. 102									
FEEDER	11KV LINE MILES				400 VOLTS LINE MILES				WELLS
	6/1/0 ACSR	6/1/0 ACSR	6/1/0 ACSR	TOTAL	4/0 ACSR	6/1/0 ACSR	6/1/0 ACSR	TOTAL	
D H	—	16.23		16.23	0.8	6.03		6.83	20
E H	6.02	22.61		28.63	—	7.50		7.50	28
F H	—	0.14		0.14	0.20	—		0.20	3
G H	9.40	3.97		13.37	0.52	3.57		4.09	40
TOTAL	15.42	44.95		60.37	1.52	19.12		14.64	91

DATE	REVISION
5-Mar 68	Minor Corrections

BEST AVAILABLE COPY

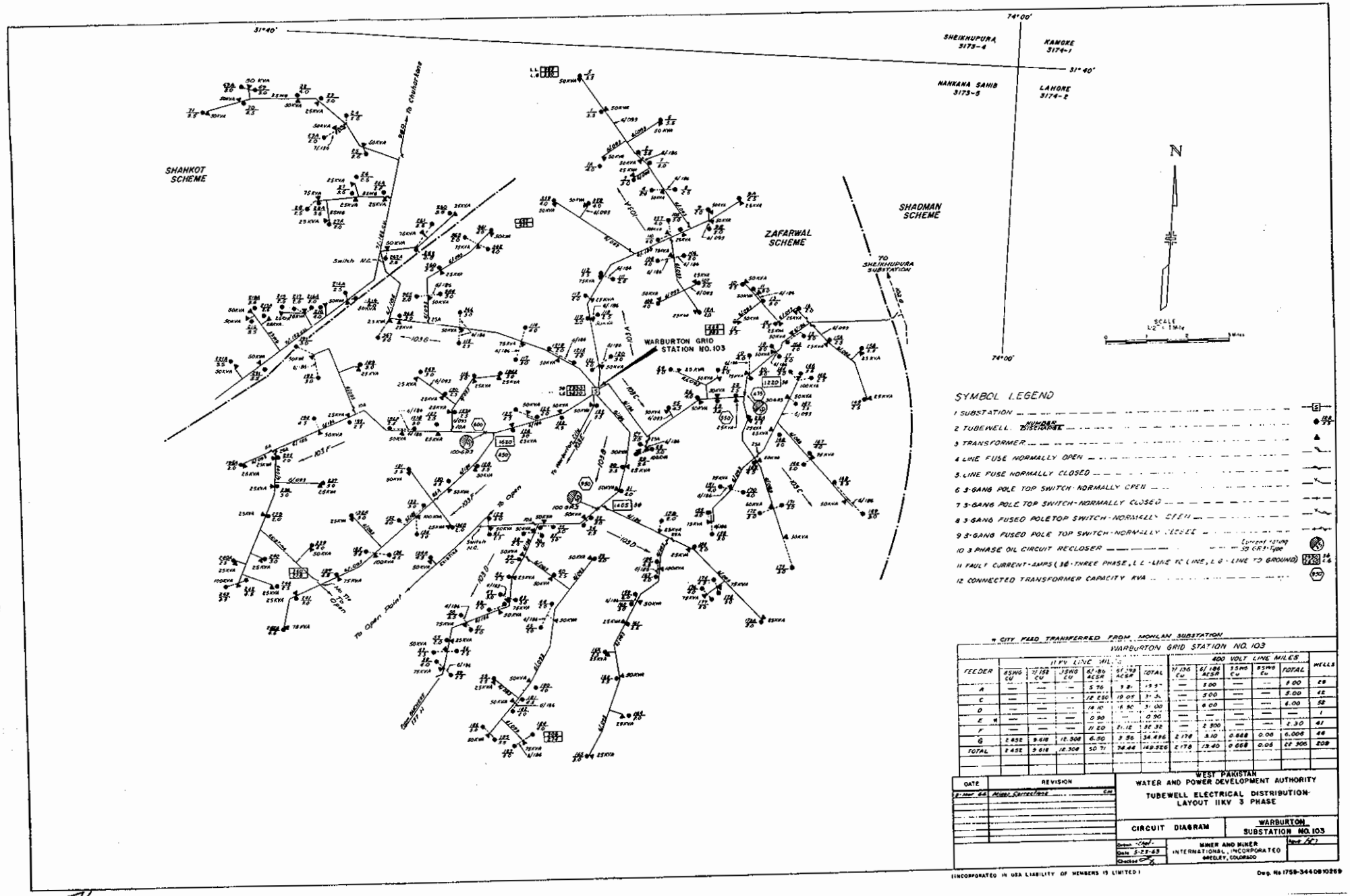

* CITY FEED TRANSFERRED FROM MOHLAN SUBSTATION

WARBURTON GRID STATION NO. 103

FEEDER	11 KV LINE MILES 4 SWG CU	7/.152 CU	3 SWG CU	61/.186 ACSR	61/.193 ACSR	TOTAL	400 VOLT LINE MILES 7/.136 CU	61/.184 ACSR	3 SWG CU	4 SWG CU	TOTAL	WELLS
A	—	—	—	5.76	3.8[illegible]	[illegible]	—	5.00	—	—	5.00	29
C	—	—	—	12.250	18.09	31.3[illegible]	—	5.00	—	—	5.00	42
D	—	—	—	14.10	16.90	31.00	—	6.00	—	—	6.00	52
E *	—	—	—	0.90	—	0.90	—	—	—	—	—	1
F	—	—	—	11.20	21.12	32.32	—	2.300	—	—	2.30	41
G	2.452	9.618	12.308	6.50	3.56	34.496	2.178	3.10	0.668	0.06	6.006	46
TOTAL	2.452	9.618	12.308	50.71	74.44	149.526	2.178	19.40	0.668	0.06	22.306	209

DATE	REVISION
9-Mar-66	Minor Corrections

WEST PAKISTAN
WATER AND POWER DEVELOPMENT AUTHORITY
TUBEWELL ELECTRICAL DISTRIBUTION-
LAYOUT 11KV 3 PHASE

CIRCUIT DIAGRAM — WARBURTON SUBSTATION NO. 103

Drawn: Chief
Date: 5-23-65
Checked:

MINER AND MINER INTERNATIONAL, INCORPORATED
GREELEY, COLORADO

Sheet 1 of 1

(INCORPORATED IN USA LIABILITY OF MEMBERS IS LIMITED)

Dwg. No 1759-344 0810269

BEST AVAILABLE COPY

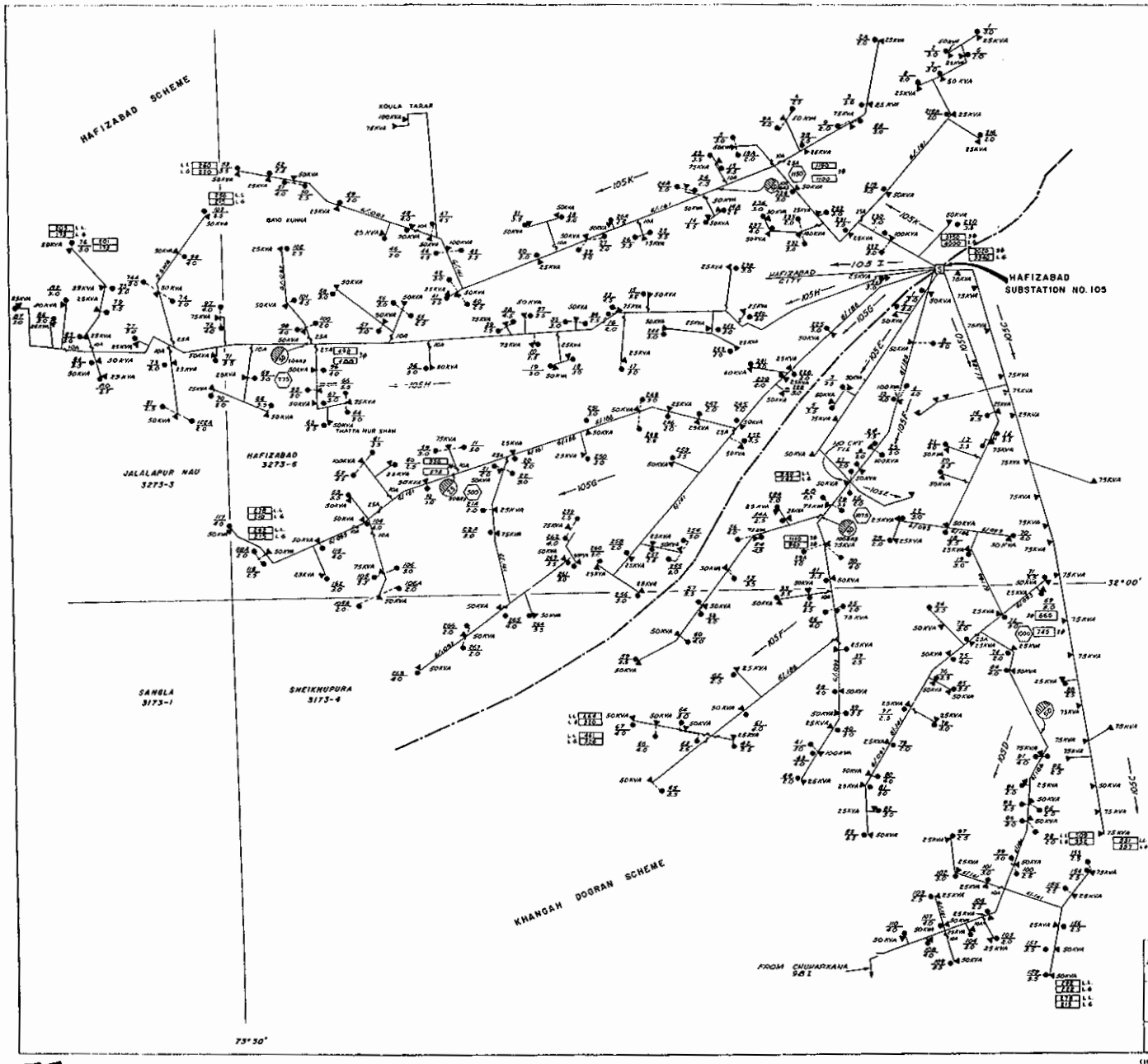

SYMBOL LEGEND

1. SUBSTATION
2. TUBEWELL. NUMBER / DISCHARGE
3. TRANSFORMER
4. LINE FUSE NORMALLY OPEN
5. LINE FUSE NORMALLY CLOSED
6. 3-GANG POLE TOP SWITCH - NORMALLY OPEN.
7. 3-GANG POLE TOP SWITCH - NORMALLY CLOSED
8. 3-GANG FUSED POLETOP SWITCH - NORMALLY OPEN.
9. 3-GANG FUSED POLE TOP SWITCH - NORMALLY CLOSED.
10. 3 PHASE OIL CIRCUIT RECLOSER (PROPOSED) — Current rating 50-GR3-Type
11. FAULT CURRENT - AMPS (3Φ - THREE PHASE, L.L. - LINE TO LINE, L.G. - LINE TO GROUND)
12. CONNECTED TRANSFORMER CAPACITY - KVA

HAFIZABAD GRID STATION NO. 105

FEEDER	11KV LINE MILES 61/186 ACSR	61/151 ACSR	61/093 ACSR	35SING CU	55SING CU	TOTAL	400 VOLT LINE MILES 61/186 ACSR	61/151 ACSR	61/093 ACSR	TOTAL	WELLS
G	7.392	12.779	13.180			33.351	5.364			5.364	51
D	9.7188	2.7166	2.9820			22.4174		0.7818		0.7818	53
F	13.4380	6.5095	4.8895			24.8372	6.520			6.520	46
H	5.607	7.087	18.1960	1.005	2.690	34.545		3.218		3.218	56
K	4.524	16.655	15.255			36.404	1.140	4.228		5.368	54
TOTAL	40.7098	47.4771	55.5025	1.005	2.690	151.3844	13.024	8.2379		21.2619	260
C	EXISTING - NOT PART OF PROJECT										1
E	EXISTING - NOT PART OF PROJECT										3
I	EXISTING CITY FEEDER										

DATE	REVISION	
3-Mar 68	Minor Corrections	

WEST PAKISTAN
WATER AND POWER DEVELOPMENT AUTHORITY
TUBEWELL ELECTRICAL DISTRIBUTION
LAYOUT 11KV 3 PHASE

CIRCUIT DIAGRAM — HAFIZABAD SUBSTATION NO. 105

5-29-63 — MINE ENGINEERS INTERNATIONAL, INCORPORATED — Dwg. No. 219

(INCORPORATED IN USA LIABILITY OF MEMBERS IS LIMITED)

Dwg. No. 1759-34408 10281

BEST AVAILABLE COPY

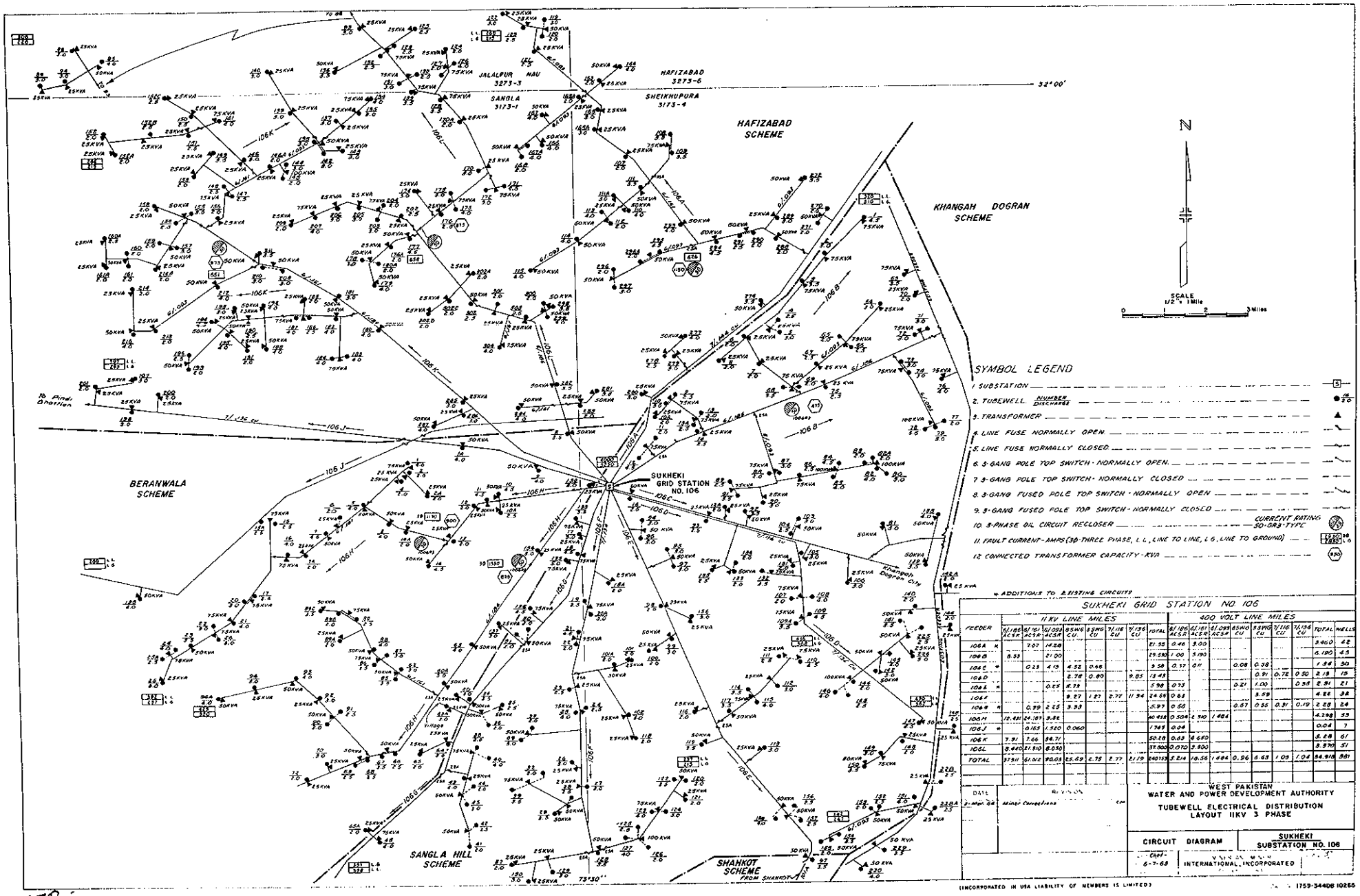

-78-

BEST AVAILABLE COPY

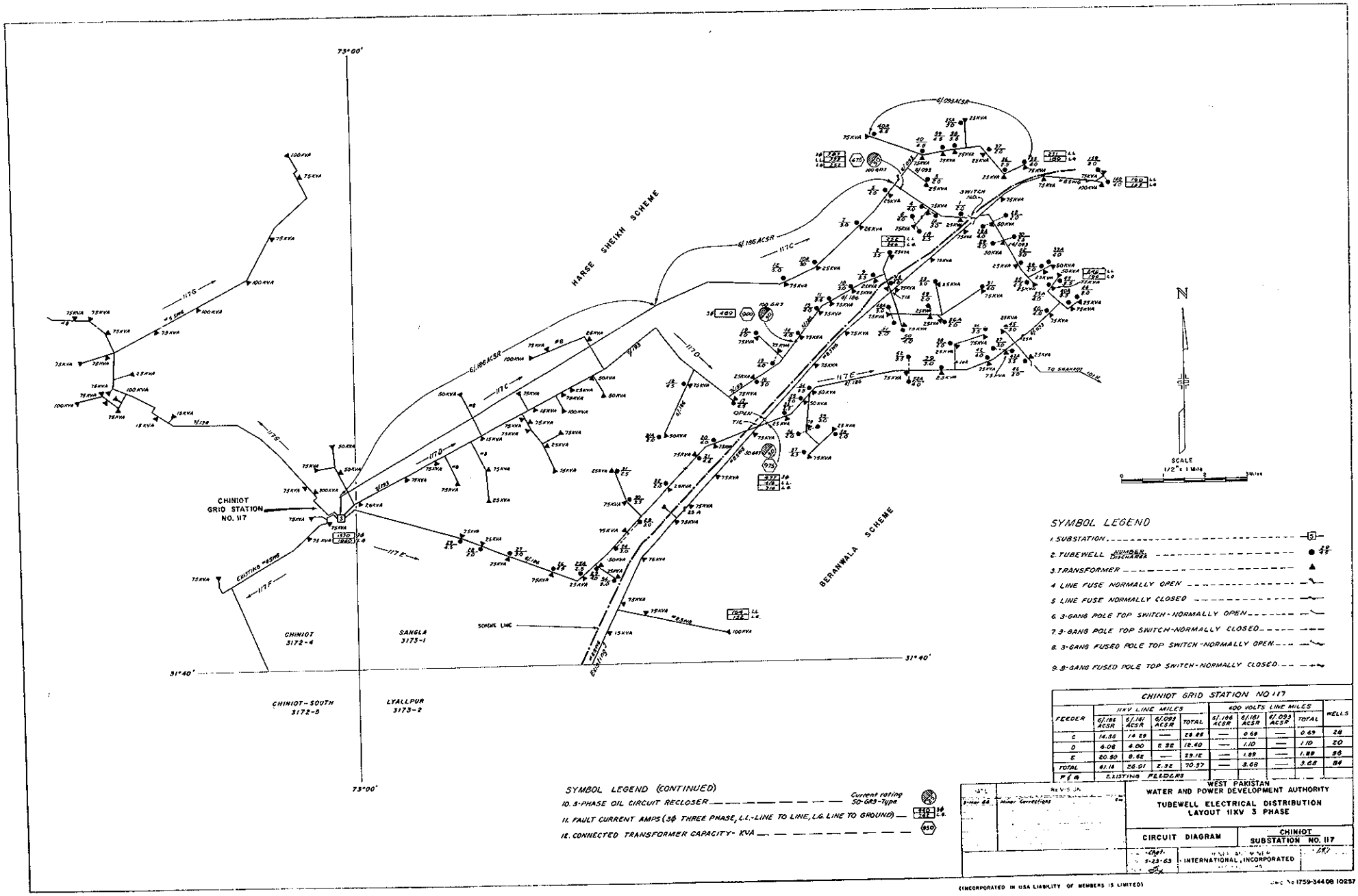

CHINIOT GRID STATION NO 117									
FEEDER	11KV LINE MILES				400 VOLTS LINE MILES				WELLS
	61/186 ACSR	61/161 ACSR	61/093 ACSR	TOTAL	61/186 ACSR	61/161 ACSR	61/093 ACSR	TOTAL	
C	14.56	14.29	—	28.85	—	0.69	—	0.69	28
D	6.08	6.00	2.32	12.40	—	1.10	—	1.10	20
E	20.50	8.62	—	29.12	—	1.89	—	1.89	36
TOTAL	61.14	28.91	2.32	70.37	—	3.68	—	3.68	84
F & G	EXISTING FEEDERS								

REVISION	
Sept 68	Minor Corrections

-79-

BEST AVAILABLE COPY

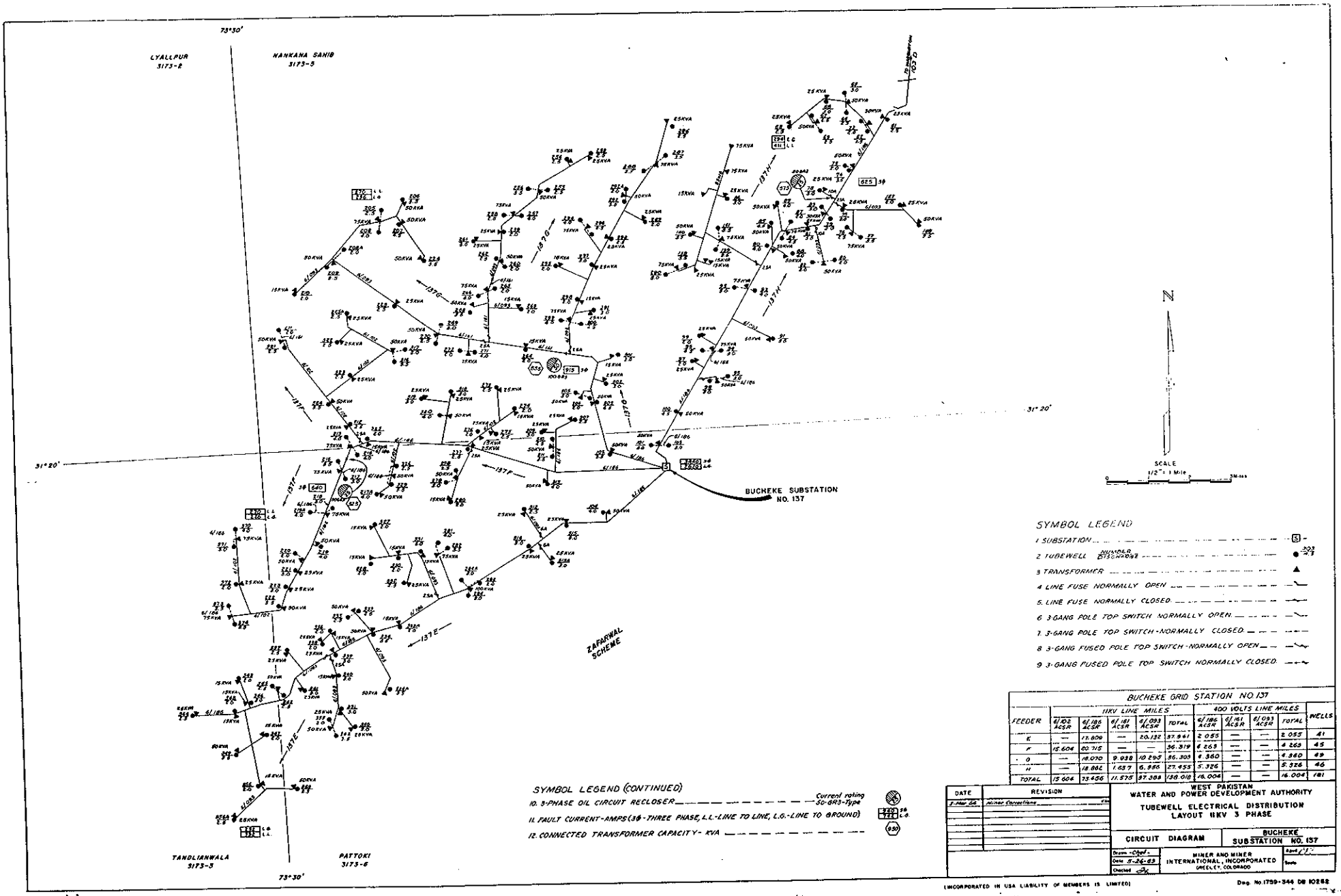

80

BEST AVAILABLE COPY