PD-ABD-703
ISN 75519

UNITED STATES OF AMERICA
AGENCY FOR INTERNATIONAL DEVELOPMENT
U.S.A.I.D. MISSION TO KENYA

UNITED STATES POSTAL ADDRESS
US AID MISSION TO KENYA
BOX 201
APO NEW YORK, NEW YORK 09675

INTERNATIONAL POSTAL ADDRESS
POST OFFICE BOX 30261
NAIROBI, KENYA

Dr. Adriel R. Njogu, Ph.D.
Director, Kenyan Trypanosomiasis Research Institute, (KETRI)
Ministry of Research, Science and Technology
P.O. Box 362
Kikuyu, Kenya.

Dear Dr. Njogu:

Subject: Grant No. 615-0258-G-SS-00-1070

Pursuant to the Authority contained in the Foreign Assistance Act of 1961, as amended, the Federal Grant and Cooperative Agreement Act of 1977, the Agency for International Development (hereinafter referred to as "A.I.D." or "Grantor" hereby grants to Ministry of Research, Science and Technology, Kenya Trypanosomiasis Research Institute (hereinafter referred to as "Grantee" the sum of $150,000 to provide support for a research program entitled "Combination Therapy for Trypanosoma brucei rhodesiense Infections" as described in the Schedule of this Grant, Attachment 1, "Program Description" Attachment 2, and the Grantee's proposal, as amended, which is made a part of the Grant and incorporated herein by reference.

This Grant is effective and obligation is made as of the date of this letter and shall apply to commitments made by the Grantee in furtherance of program objectives during the period beginning August 27, 1991 and ending August 26, 1995.

This Grant is made to the Grantee on condition that the funds will be administered in accordance with the terms and conditions as set forth in Attachment 1 entitled, the "Schedule", Attachment 2 entitled "Program Description", and Attachment 3 entitled "Standard Provisions", which have been agreed to by your organization.

Please sign all copies of this letter to acknowledge your receipt and acceptance of this Grant. Keep one copy for your files and return the original and all remaining copies to this office.

Sincerely,

Stafford Carter for

John R. Westley
Grant Officer
USAID/Nairobi
Nairobi, Kenya

Attachments:

1. Schedule
2. Program Description
3. ~~Standard Provisions and Optional Provisions~~
4. Original Proposal, Revisions and/or Compliance to Protocols

ACKNOWLEDGED:

BY: JOHN K. OMUSE

TYPED NAME: Dr. ~~Adriel R. Njogu~~

TITLE: DIRECTOR, KETRI

Date: 16/9/91

FISCAL DATA

PIO/T No.	:	N/A
Appropriation No.	:	72-1111021.6
Budget Plan Code	:	DDSA-91-29615-KG11
Allotment No.	:	146-51-615-00-19-11
Project No.	:	936-5600
Total Estimated Amount	:	$150,000
Total Obligated Amount	:	$150,000
Funding Source	:	AID/W
Project Office	:	AID/SCI
Voucher Paying Office	:	USAID/Nairobi
Proposal No.	:	10.410

Funds Available
CONT/KENYA
Initials Mwuc
Date 9/30/91

K210174

- 2 -

SCHEDULE

A. Purpose of Grant No. 10.410

The purpose of this Grant is to provide support for the Kenyan Trypanosomiasis Research Institute, (KETRI) Ministry of Research, Science and Technology's proposal entitled "Combination Therapy for Trypanosoma brucei rhodesiense Infections" (10.410) which is hereby incorporated by reference. The proposal was amended on December 28, 1990 by letter to the Office of the Science Advisor. In the event of conflict, the revised proposal takes precedence over the original.

B. Period of Grant

This Grant is for four years with an effective date of this Grant August 27, 1991, The expiration date is August 26, 1995.

C. Amount of Grant and Payment

1. AID hereby obligates the amount of $150,000.

2. Payment shall be made to the Grantee in accordance with procedures set forth in Attachment 3 - Required as Applicable Standard Provision entitled "Payment - Cost Reimbursement".

3. All financial reports required by this provision shall be submitted to:

USAID/Nairobi
Office of the Controller
Nairobi, Kenya

Include PSTC Proposal No. 10.410

D. Grant Budget

The following is the Budget for this Grant, including local cost items, if authorized. Revisions to this Budget shall be made in accordance with Mandatory Standard Provision of this Grant entitled "Revision of Grant Budget." Within the total estimated cost of the Grant, the Grantee may adjust the line items as reasonably as necessary for the performance of the grant program.

"Reasonably as necessary" has been interpreted as up to 15 percent. Any amount greater than 15 percent would require the approval of the Project Officer.

Estimated Budget

Line Item	Amount
Total	$150,000

A Line-Item Budget is attached as Attachment 2.A.

E. Reporting and Evaluation

1. Technical Reports

Reports must be sufficiently detailed to substantiate the findings and to permit a scientific evaluation of the research. Overseas collaborators must be given fair credit for their participation in the research and a chance to review and comment on the Final Report before it is submitted. The principal investigator must share a draft of the Final Report with the A.I.D. Project Officer for comment prior to the formal submission. Publication of results in scientific journals is encouraged. Additional guidance on report preparation is given in the "Interim Guidelines on Performance Report Preparation for PSTC and CDR Projects," available from AID/SCI.

a. Performance Reports: Performance reports are required every six months. The principal investigator will submit reports stating what has been accomplished to date and detailing project management issues. A Financial Status Report will be attached to each report. Reports are due within sixty (60) days after the end of each six month period. Four copies of each report are be submitted to the Office of the Science Advisor, Room 320 SA-18, Washington, D.C. 20523-1818; one copy to the Project technical backstop Officer, Dr. Caryn Kolar Miller, ST/HP/H/CD, Room 702, SA-18, Agency for International Development, Washington, D.C. 20523-1817; one copy to the USAID/Nairobi; and two copies to the National Academy of Sciences, BOSTID, 2101 Constitution Avenue, N.W., Washington, D.C. 20418.

b. Final Performance Report: Within sixty (60) days after the termination date of the Grant, the principal investigator will submit copies of the Final Report to the Office of the Science Advisor, A.I.D., Room 320 SA-18, Washington, D.C., 20523-1818; one copy to the Project technical backstop Officer, Dr. Caryn Kolar Miller, ST/HP/H/CD, Room 702, SA-18, Agency for

International Development, Washington, D.C. 20523-1817; one copy to the USAID/Nairobi; one copy to Bureau for Program and Policy Coordination, Center for Development Information and Evaluation (PPC/CDIE), Room 215C, SA 18, Washington, D.C., 20523-1802; and one copy to the National Academy of Sciences, BOSTID, 2101 Constitution Avenue, N.W., Washington, D.C. 20418.

2. The Financial Status Report (SF-269) is required every six months and must be submitted as an attachment to the performance report.

a. Voucher Paying Office

USAID/Nairobi
Office of the controller
Nairobi, Kenya

b. Voucher Identification

Grant No:615-0258-G-SS-00-1070
Project Number: 936-5600
SCI No: 10.410

F. Project Officer and Investigators

1. James F. Dunn
USAID/Kenya
P.O. Box 30261
Nairobi

2. AID/W TECHNICAL BACKSTOP OFFICER

Dr. Caryn Kolar Miller
S&T/HP/H/CD, Room 702 SA-18
Agency for International Development
Washington, D.C. 20520-1817

3. Principal Investigator and participating institution:

Dr. J. K. Omuse
Director, Kenya Trypanosomiasis Research
Institute, KETRI
P.O. Box 362
Kikuyu, Kenya

4. Co-Investigators and Collaborating Institution(s):

   a. Dr. Allen B. Clarkson, Jr., Ph.D.
      Assistant Professor
      Department of Medical and Molecular Parasitology
      New York University Medical Center
      550 First Avenue
      New York, New York 10016

   b. Dr. Cyrus J. Bacchi, Ph.D
      Director, Haskins Laboratories
      Professor, Department of Biology
      Pace University
      41 Park Row
      New York, N.Y. 10038

G. Special Provisions

1. Compliance with Federal Guidelines and Regulatory Procedure:

   a. The Recipient will implement this research activity in accordance with all relevant guidelines for U.S. Government funded research, such as:

      (1) The National Institutes of Health (NIH) guidelines for the ethical treatment of human subjects;

      (2) Guidelines for the handling of radioactive materials;

      (3) NIH and USDA guidelines for the handling of pathogenic microorganisms;

      (4) USDA-APHIS procedures for animal and plant health inspection;

      (5) Procedures issued by the USDA, EPA, or other appropriate Federal agencies, regarding testing of genetically engineered organisms;

      (6) A.I.D.'s environmental procedures; and

(7) Such other Federal guidelines and procedures as may apply during the course of research.

b. All existing comparable guidelines of the host country in which the research is actually located must be followed also.

c. Reports submitted under this activity to A.I.D. will address the cited regulatory issues. All modifications of protocols affecting these regulatory concerns must be reported. The investigators are responsible for reporting any difficulties encountered in implementing these protocols.

2. Laboratory Safety and Hazard Containment: Research will be conducted following the protocols described in the original proposal, as amended, which insure the safety of persons involved in the research. Notwithstanding, the research must be conducted following procedures issued by the U.S. Government and those issued by the government of the host country for the containment of these hazards.

If the protocols involving laboratory safety and hazard containment are revised, they must be re-reviewed by the investigator's institutional review committee(s) that approved the original protocol, and the Project Officer and Office of the Science Advisor must be informed in writing before the revised protocols are used. The revised procedures must be consonant with the guidelines of the country in which the laboratory is located, and of the United States. Copies of the approval of the revised protocols by the investigator's institutional review committee(s) should also be provided the Project Officer and the Office of the Science Advisor.

Similarly, the research will be conducted in the facilities described in the original proposal, as amended. If the research is moved to new facilities, or the facilities are modified in such a way to affect safety or hazard containment, a description of the new facilities must be provided to the Project Officer and to the Office of the Science Advisor before the research is affected. Any applicable institutional review of the facilities must be repeated, and the re-certification must be provided to the Project Officer and the Office of the Science Advisor.

3. Containment and Safe Disposal of Animal or Plant Pathogens or Pests: Research will be conducted following the protocols described in the original proposal, as amended which insure the containment and safe disposal of animal or plant pathogens. Notwithstanding, the research must be conducted following procedures issued by the U.S. Government and those issued by the government of the host country for the containment of these pathogens or pests.

   If any protocol is revised, it must be re-reviewed by the investigator's institutional review committee(s) that approved the original protocol, and the Project Officer and Office of the Science Advisor must be informed in writing before the revised protocols are used. The revised procedures must be consonant with the guidelines of the country in which the laboratory is located, and of the United States. Copies of the approval of the revised protocols by the investigator's institutional review committees should also be provided the Project Officer and the Office of the Science Advisor.

   Similarly, the research will be conducted in the facilities described in the original proposal, as amended. If the research is moved to new facilities, or the facilities are modified in such a way to affect safety or hazard containment, a description of the new facilities must be provided to the Project Officer and to the Office of the Science Advisor before the research is affected. Any applicable institutional reviews of the facilities should be repeated, and the re-certification should be provided to the Project Officer and the Office of the Science Advisor.

4. Humane Treatment of Experimental Animals:

   a. Principals for the Treatment of Vertebrates: The Grantee will adhere to the following principals for the utilization, care and transportation of vertebrate animals used in testing, research and training. For guidance throughout these Principles, reference is made to the Guide for the Care and Use of Laboratory Animals prepared by the Institute of Laboratory Animal Resources, National Research Council.

      (1) Procedures involving animals should be designed and performed with due consideration of their relevance to human or animal health, the advancement of knowledge, or the good of society.

(2) The animals selected for a procedure should be an appropriate species and quality and the minimum number required to obtain valid results. Methods such as mathematical models, computer simulation and in vitro biological systems should be considered.

(3) Proper use of animals, including the avoidance or minimization of discomfort, distress, and pain when consistent with sound scientific practices, is imperative. Unless the contrary is established, investigators should consider that procedures that cause pain or distress in human beings may cause pain and distress in other animals.

(4) Procedures with animals that may cause more than momentary or slight pain or distress should be performed with appropriate sedation, analgesia, anesthesia. Surgical or other painful procedures should not be performed on unanesthetized animals paralyzed by chemical agents.

(5) Animals that would otherwise suffer severe or chronic pain or distress that cannot be relieved should be painlessly killed at the end of the procedure, or, if appropriate, during the procedure.

(6) The living conditions of animals should be appropriate for their species and contribute to their health and comfort. Normally the housing, feeding, and care of all animals used for biomedical purposes must be directed by a veterinarian or other scientist trained and experienced in the proper care, handling, and use of the species being maintained or studies. In any case, veterinary care shall be provided as indicated.

(7) Investigators and other personnel shall be appropriately qualified and experienced for conducting procedures on living animals. Adequate arrangements shall be made for their in-service training, including the proper and humane care and use of laboratory animals.

(8) Where exceptions are required in relation to the provisions of these principles, the decisions should not rest with the investigators directly concerned, but should be made, with due regard to U.S. and host country regulations, by an appropriate review group such as an institutional animal research committee. Such exception should not be made solely for the purpose of teaching or demonstration.

b. Applicable Regulations: The transportation, care and use of animals must be in accordance with the U.S. Animal Welfare Act (7 U.S.C. 2131 et. seq.) and other applicable U.S. Federal laws, guidelines, and policies. Notwithstanding, the research must be conducted following procedures issued by the government of the host country for the humane treatment of experimental animals.

c. Compliance with Reviewed Protocols: Research will be conducted following the protocols described in the original proposal, as amended which insure the humane treatment of experimental animals.

d. Revision of Protocols: If any protocol involving the experimental animals is revised, it must be re-reviewed by the investigator's institutional review committee(s) that approved the original protocol, and the Project Officer and the Office of the Science Advisor must be informed in writing before the revised protocol(s) is used. The revised procedures must be consonant with the guidelines of the country in which the animals are affected, and of the United States. Copies of the approval of the revised protocols by the investigator's institutional review committees should be provided the Project Officer and the Office of the Science Advisor.

5. Intellectual Property Rights: Intellectual property rights stemming from the activities supported under this grant will be apportioned as appropriate. Merrell Dow holds exclusive patent rights to all compounds synthesized by the company and has agreed to provide DFMO to WHO at actual production costs on both pro bono considerations and for favorable publicity. In addition, a mutual relationship exists among Merrell Dow, the U.S. scientists, KETRI and the people who may benefit from treatment by the drugs developed under the PSTC research.

If the participants chose to modify that apportionment, the revised apportionment must be submitted to the A.I.D. Project Officer for approval before it takes effect. Notwithstanding the intellectual property rights clauses provided in the following standard provisions apply.

H. STANDARD PROVISIONS

1. While in the field, the Grantee will keep the A.I.D. field mission(s) generally appraised of the research, but will not request administrative support except for the usual in-country introductions as may be appropriate. The Grantee will abide by Mission and host government regulations and customs as they apply to AID-supported in-country activities.

2. Project Officer approval required by paragraph (a) of optional Standard Provision 3 of this grant entitled "Air Travel and Transportation," is hereby granted for travel between the United States and all other countries described in the project description.

3. The principal investigator(s) and essential scientific staff of Grantee and co-principal investigator of the collaborating institutions may not be changed during the life of the research without prior written approval of the Office of the Science Advisor.

4. The Standard Provisions applicable to this grant are entitled "Mandatory Standard Provisions for U.S., Non-governmental Grantees" and "Optional Standard Provisions for U.S., Non-governmental Grantees" and are included herein as Attachment 3.

I. Title to Property

The title to property acquired under this Grant will vest in the Grantee in accordance with Optional Standard Provision No. 18 entitled "Title to and Use of Property (Grantee Title)". When the principal Grantee makes a subagreement under this Grant Agreement, the principal Grantee will pass to the Subgrantee the provisions of the above cited reference, as appropriate. Equipment purchased on behalf of each collaborating institution shall remain the property of that institution.

J. Publications

Acknowledgment of A.I.D.'s contribution to any publication resulting from this Grant shall be made in accordance with procedures set forth in Attachment 3 - Optional Standard Provision No. 10 entitled "Publications".

K. Closeout Procedures

This section prescribes uniform closeout procedures for this Grant.

1. The following definitions shall apply for the purpose of this section:

   a. Closeout: The closeout of a Grant is the process by which A.I.D. determines that all applicable administrative actions and all required work of the Grant have been completed by the Grantee and A.I.D.

   b. Date of Completion The date of completion is the date on which all work under the Grant is completed, or the date on the award document, or any supplement or amendment thereto, on which A.I.D. sponsorship ends.

   c. Dissallowed Costs Disallowed costs are those charged to a Grant that A.I.D. or its representative determines to be unallowable, in accordance with the applicable Federal cost principles or other conditions contained in the Grant.

2. A.I.D. closeout procedures include the following requirements:

   a. Upon request, A.I.D. shall make prompt payments to a Grantee of allowable reimbursable costs under the Grant being closed out.

   b. The Grantee shall immediately refund any balance of unobligated (unencumbered) cash that A.I.D. has advanced or paid and that is not authorized to be retained by the Grantee for use in other Grants.

   c. A.I.D. shall obtain from the Grantee within 90 calendar days after the date of completion of the Grant all financial, performance, and other reports required as the condition of the Grant. A.I.D. may grant an extension when requested by the Grantee.

   d. When authorized by the Grant, A.I.D. shall make a settlement for any upward or downward adjustments, to A.I.D.'s share of costs after these reports are received.

   e. The Grantee shall account for any property acquired with A.I.D. funds, or received from the Government in accordance with the provisions of OMB Circular A-110, Attachment K.

   f. In the event a final audit has not been performed prior to the closeout of the Grant, A.I.D. shall retain the right to recover an appropriate amount after fully considering the recommendations on questioned costs resulting from the final audit.

L. Source and origin of goods and services

1. The country or countries where research or other scientific/technological cooperation takes place shall be deemed to be the cooperating country for the purpose of permitting local cost financing.

2. Goods and services, except for ocean shipping, financed by A.I.D. under the project shall have their source/origin in the Cooperating Country or the United States and Code 935 countries.

3. Ocean shipping financed by A.I.D. under the project shall, except as A.I.D. may otherwise agree in writing, be financed only on flag vessels of the United States.

WANG:0878C:MMozynski:5/6/91

PROGRAM DESCRIPTION

F: TECHNICAL WORK PLAN:

a. General Hypothesis. For the reasons outlined above we believe that DFMO, Mel B and nifurtimox should be highly synergistic thus the combination is likely to be efficacious for all African trypanosome infections. Since melarsoprol and nifurtimox are available for human use now and DFMO is expected to be routinely available very soon, promising results from the proposed work could be put into use very quickly. It is expected that a combination of very low doses of each compound will be effective thus toxic side effects should be avoided. It is also realistic to expect that an understanding of the resistance of T. brucei rhodesiense to DFMO will lead to means of overcoming that resistance.

b. Experimental Approach. To define the optimal ratio of the three drugs, we plan a serial approach. The first step will be examination of the effect of combinations against bloodstream T. brucei rhodesiense (i.e., infective forms) in tissue culture, a technique in routine use at KETRI. A three-way drug matrix will be used and the results will be analyzed using isobolograms made by plotting a chosen degree of effectiveness against varying concentrations of two or more drugs. Effectiveness for the individual drugs and combinations will be defined as complete eradication of the parasites in a culture well within a given time period (chosen empirically after pilot experiments). Isobolograms will be formed by plotting the minimal concentrations of the drugs that reach this chosen degree of effectiveness (Berenbaum, 1978). A two drug isobologram forms a 2 dimensional line plot and a three drug combination a 3 dimensional surface plot. KETRI has IBM PS/2 computers and we have software that will produce the 3 dimensional surface plots required. The isobolograms will reveal the ratios that result in optimal synergism. Although such studies do not address pharmacokinetic issues, we predict that they will allow estimates of relative effectiveness in vivo. For example, they will allow one to estimate the proportional increase in one component that will be required to compensate for a proportional decrease in another component.

The second step will utilize mice infected with T. brucei rhodesiense. The minimum dose for 100% cure will be determined separately for each drug in mice and this data will be used with isobolograms from the tissue culture results to predict useful combination doses. For example, suppose that a point of an isobologram shows that all the parasites can be killed in vitro with a combination of 10% of the amount of drug A, plus 5% of B and 9% of C relative to the amount required to kill 100% of the parasites if each drug was used alone. The in vivo starting point would therefore be with these percentages of the minimum in vivo doses for the single drugs. One very important point to test in vivo from the in vitro data is that isobologram point when each drug is at the least percentage of its toxic dose.

The transfer of the synergistic ratios may not be 1:1 from tissue culture to mice but there can be little doubt that the tissue culture will offer a very useful guide. The value of such a guide is readily realized if one were to consider testing in mice a matrix of 3 drugs at 10 doses for each drug. The matrix yields 1,000 dosages. If 5 mice were used for each dose, this would require 5,000 mice. The numbers grow geometrically with any

variation in the duration of the doses and with use of multiple strains. On the other hand, a dozen 96 well plates can be used to test 1,000 doses, including controls.

The third step in the evaluation of the triple combination will be a translation of the tissue culture and mouse results to monkeys. This phase will, of necessity, be restricted due to the number of monkeys that can be used but it is a very important preclinical evaluation stage. Fortunately, KETRI has an excellent monkey colony.

Both the second and third steps will utilize models of sleeping sickness that involve the central nervous system (CNS) as well as acute, non-CNS models. Drs. Clarkson and Bacchi have experience with mouse CNS models and KETRI has developed a monkey CNS model. CNS models are important because this is the most difficult stage of the disease to treat. However, we can anticipate success since all three drugs are active against CNS infections when used singly. Knowledge of the ratio of the effective dosage for CNS disease to that for non-CNS disease will be very useful for eventual clinical application. We expect that a single safe protocol can be found that is effective for all stages of the disease, a very desirable situation. However, if a situation should arise in which a standardized triple combination protocol is not effective, the preclinical data we propose to collect will guide the modification of such a protocol to provide an effective therapy in that situation.

c. **Spectrum of DFMO sensitivity; In Vivo Combination Chemotherapy Using Mouse Infections.** We will further refine our estimate of the natural spectrum of *T. brucei rhodesiense* sensitivity to DFMO in East Africa. The most important point is to obtain an estimate of the maximum degree of resistance that can be expected to be encountered. *T. brucei rhodesiense*-infected mice will be used because it is difficult to establish a large number of strains *in vitro*.

This part of the project is very straight forward but is expected to be of major value in projecting the usefulness of DFMO therapy both alone and in combination with other drugs. The procedure will be to inoculate groups of mice and treat with graded doses of DFMO. From this screen of parasite isolates we will select those showing no resistance, moderate resistance and a high resistance to DFMO for the three drug matrix study described in A. This has been done for an initial group of 14 strains, under the prior PSTC proposal as detailed in the appended manuscript.

As noted earlier, we have found synergism between DFMO, arsenicals and nifurtimox. These studies will be broadened and employ increased doses of these agents, especially DFMO. Initially, combination studies will be with mice infected for 24 h prior to treatment. The rapid initiation of treatment should not allow CNS infections to develop. We will use sequential dosing, initiating DFMO administration prior to melarsen oxide and nifurtimox and continuing through at least part of the Mel B and nifurtimox treatment. We found this type of regimen enhanced the synergism of DFMO/bleomycin (McCann et al., 1981) and this appears to hold for DFMO/melarsen oxide (Jennings, 1988). Any separation (even 1 day) between administration of DFMO and the other agent will

significantly decrease efficacy. Tail vein blood films will be examined weekly as will the buffy coat from hematocrit tube determinations. In the calculation of synergism between these agents, the method of Berenbaum (1978) will be used to plot data as 3 agent isobolograms, as noted for tissue culture models.

Once cures are reliably obtained with early stage infections we will examine the activity of combinations against late stage CNS infections. For the standard mouse CNS model, the infection is allowed to progress for 21 days prior to initiation of treatment. However, since many strains cause CNS infection within 1 week and some of the strains of interest kill within 10 days, quicker CNS models will be used when they are both possible and necessary. Since most strains are sensitive to suramin, the infections will be allowed to develop 5-10 days before treating with this agent. Should suramin clear the blood and these animals subsequently relapse, this will be taken as evidence of CNS infections. Combination regimens against CNS infections will necessarily involve a longer (probably 2 week) DFMO regimen with melarsen and nifurtimox treatment occurring later in the DFMO regimen.

d. Primate Evaluation. Drug combinations proving successful will be tested on the vervet monkey model of Schmidt and Sayer (1982). Each monkey will be injected intravenously with about 10^4 trypanosomes of KETRI 2537. Blood films from the ear vein will be checked daily for parasitemia. Every two weeks the monkeys will be sedated and given another overall medical examination. At the same time a lumbar puncture will be performed and CSF will be collected to check for parasites, protein concentration, white blood cell count and IgM level. Treatment will be initiated in some of the monkeys between 24 and 35 days when previous experience indicates that the monkey will have trypanosomes in the CSF, but not in brain tissue. This is called stage I late disease. Hence when a monkey is treated at this stage of the infection, the ability of a drug to clear trypanosomes from CSF is tested. After 35 days of infection other monkeys will be treated with berenil at a dose rate of 2-5 mg/kg/day for 3 days to clear the bloodstream of trypanosomes thus producing a temporary clinical improvement in the monkey. About 2-3 months after the berenil treatment, the trypanosomes begin to reappear in the blood and CSF. The monkey's clinical condition begins to deteriorate again and this is followed by encephalitis. These monkeys will have reached Stage II. Experimental protocols successful for Stage I disease will be tested in Stage II monkeys. The success of treatment of Stage II monkeys will be monitored by examination of weekly blood films for 600 days post treatment in order to confirm successful treatment.

e. Biochemical Studies. Four possible mechanisms of resistance to DFMO will be considered: 1) overproduction of reduced thiols, i.e., overproduction of trypanothione; 2: reduced uptake of DFMO; 3) overproduction of ODC, the target enzyme; and 4) reduction in the sensitivity of ODC to DFMO. Any of these mechanisms could spare the parasite and each will be examined.

i. Trypanothione metabolism. Tolerance to DFMO/arsenicals by *T. b. rhodesiense* may be due to altered intracellular levels of trypanothione. Trypanothione metabolism will be studied by quantitation of trypanothione and the N^1- and N^8- glutathionyl

spermidine levels in sensitive and refractory isolates and by measuring levels of trypanothione reductase. A first step will be to determine if there are changes in total thiol pool sizes; this would be done using 5,5[1]-dithio bis(2-nitrobenzoic acid) (DTNB) which reacts with free sulfhydryl groups resulting in an absorbance increase at 412 nm. The method employed is that of Ellman (1959) in which acid extracts are added to 1.0 M phosphate buffer (pH 8.0) and read immediately upon addition of DTNB. Thiol concentration in the sample is determined from a standard graph using glutathione and is then compared to total thiols in isolates. This fast, easily reproducible and sensitive (detects 50 uM thiols) method will be used for rapid preliminary screening. The levels of specific thiols can then be determined by HPLC separation using a reverse phase C-18 ultrasphere column (5 um particle size: Shin and Fairlamb 1988). The latter studies would be done in Dr. Bacchi's laboratory in New York.

ii. Uptake of DFMO. This will be measured in bloodstream forms harvested from rats and suspended in drug in a physiological medium (MEM + 10% FBS), as described previously (Bitonti et al. 1986).

iii. Overproduction of ODC. We will examine ODC activity carefully: grossly elevated ODC levels and K_i values for DFMO markedly higher than found in susceptible strains would indicate overproduction of the enzyme or production of ODC with an altered active site as basic mechanism of resistance. Time dependent inhibition kinetics will be used to determine K_i values for DFMO as in Bitonti et al. (1985).

Parasite Strains. KETRI maintains and has expanded the former EATRO strain bank (now the KETRI bank) and has an extensive collection of *T. b. rhodesiense* stocks in liquid nitrogen. At this time, 14 isolates have been tested in a mouse system for susceptibility to DFMO and standard trypanocides, as described in the appended manuscript (Bacchi et al. 1989). Additional clinical isolates would be sought preferably those from patients known to have failed one or more clinical treatment regimens, for incorporation into the overall data base to define the range of drug susceptibility. Another advantage of KETRI is the Sleeping Sickness hospital at Alupe on the Kenya/Uganda boarder. This facility, a branch of KETRI, annually treats patients from both countries where the disease is endemic. Drug refractory isolates can be isolated from patients and stabilates produced in immunosuppressed mice. The clinic, and laboratory facilities are located within the same compound.

Drugs to be studied. DFMO will be obtained from the Merrell Dow Research Institute, Cincinnati, OH. Dr. Peter McCann of the Institute has been a collaborator and coauthor with the American investigators on numerous publications involving the mode of action of DFMO and its efficacy in model trypanosome infections.

Melarsen oxide and Mel B, arsenicals which form the mainstay of late stage treatment are available from Specia, a division of Rhone-Poulenc, Paris.

Nifurtimox is available in tablet form. Additional analogs of DFMO or other polyamine antagonists will become available from the pharmaceutical industry during the course of the proposal.

BUDGET

First Year:			
Salary Support for Kenyan Scientists			
Person 1: J.Auma	US$ 6,500.00		
Person 2: C.Masiga	6,500.00		
Subtotal		13,000.00	
Travel Costs for U.S. Scentists to Kenya			
Air fare for 4 roundtrip tickets	12,800.00		
Per diem @$40.00 for 85 days	3,400.00		
Subtotal		16,200.00	
Equipment:			
LKB Ultraspec Spectrophotometer	8,500.00		
Microcomputer for above instrument	2,500.00		
Cell harvester	1,000.00		
Analytical balance	1,700.00		
Top loading balance	1,100.00		
Animal cages and water bottles	1,500.00		
Subtotal		16,300.00	
Supplies/animals		10,000.00	
Administrative support		2,000.00	
Total for First Year			57,500.00
Second Year:			
Salary Support for Kenyan Scientists			
Person 1: J.Auma	US$ 6,500.00		
Person 2: C.Masiga		6,500.00	
Subtotal		13,000.00	
Travel Costs for U.S. Scientists to Kenya			
Air fare for 4 roundtrip tickets	13,500.00		
Per diem @$45.00 for 84 days	3,800.00		
Subtotal		17,300.00	
Travel Costs for Kenyan Scientist to U.S.			
Air fare for 1 roundtrip ticket	3,500.00		
Per diem @$110.00 for 30 days	3,300.00		
Subtotal		6,800.00	
Supplies/animals		10,100.00	
Administrative support		2,000.00	
Total for Second Year			49,200.00
Third Year:			
Salary Support for Kenyan Scientists			
Person 1: J.Auma	US$ 6,500.00		
Person 2: C.Masiga	6,500.00		
Subtotal		13,000.00	
Travel Costs for U.S. Scientists to Kenya			
Airfare for 4 roundtrip tickets	14,000.00		
Per diem @$50.00 for 84 days	4,200.00		
Subtotal		18,200.00	
Supplies		10,100.00	
Administrative support		2,000.00	
Total for Third Year			43,300.00
GRAND TOTAL		US $150,000	

Agency for International Development
Washington, D.C. 20523

January 24, 1991

Dr. J.K. Omuse
Kenya Trypanosomiasis Research Institute, Muguga
P.O. Box 362
Kikuyu, Kenya

re: Project 10.410, "Combination therapy for *Trypanosoma brucei rhodesiense* infections"

Dear Dr. Omuse,

Thank you for your letter of 28 December, 1990 concerning the above project. With the exception of one of the provisos and one of the special concerns you have responded satisfactorily to the concerns of the reviewers.

The proviso which we would like you to readdress is the one concerning the travel costs and number of trips of the U.S. investigators to Kenya. We noted that you have reduced the number of yearly visits from four to three visits, decreasing travel costs to 26% of your total budget. This is still a considerable percentage of your budget; funds should be spent on research and equipment rather than on so many trips. While we appreciate the value of visits by investigators to each other's laboratory, we question the necessity for so many visits per year. We have found that one or two trips per year are quite adequate for the majority of our grantees. If so many visits must be made they must be better justified.

The special concern which must be addressed concerns animal welfare. We thank you for the photocopy of the "Guidelines for Care and Use of Laboratory Animals in Kenya." However, we require a letter from KETRI's animal welfare review committee certifying that KETRI does indeed follow these guidelines.

Once we receive satisfactory responses to these issues we will continue with the processing of this proposal. You should understand that the final decision to fund your project will also depend on the ranking of your proposal in comparison to other projects under consideration and the availability of funds. There must also be concurrence from other offices. Funding can <u>not</u> automatically be assumed at this time.

20

Whenever communicating with us on this project, please use the A.I.D. assigned number--10.410. Thank you for your cooperation. We look forward to receiving your prompt reply to the issues raised above.

Sincerely,

Miloslav Rechcigl, Jr., Ph.D.

Research Review Director

Office of the Science Advisor

0046e

OMB Control No. 0412-0510
Expiration Date: 12/31/89

APPENDIX 4D
MANDATORY STANDARD PROVISIONS FOR NON-U.S., NONGOVERNMENTAL GRANTEES[2]

1. Allowable Costs
2. Accounting, Audit, and Records
3. Refunds
4. Revision of Grant Budget
5. Termination and Suspension
6. Disputes
7. Ineligible Countries
8. Debarment, Suspension, and Other Responsibility Matters
9. U.S. Officials Not to Benefit
10. Nonliability
11. Amendment
12. Notices

1. ALLOWABLE COSTS (MAY 1985)

(a) The grantee shall be reimbursed for costs incurred in carrying out the purposes of this grant which are determined by the grant officer to be reasonable, allocable, and allowable in accordance with the terms of this grant and the applicable* cost principles in effect on the date of this grant, which are attached.

(1) Reasonable. Shall mean those costs that do not exceed those which would be incurred by an ordinarily prudent person in the conduct of normal business.

(2) Allocable Costs. Shall mean those costs which must are necessary to the grant.

(3) Allowable Costs. Shall mean those costs which must conform to any limitations set forth in this grant.

*NOTE: For educational institutions use OMB Circular A-21; for all other non-profit organizations use OMB Circular A-122; and for profit making firms use Federal Acquisition Regulation 31.2 and AID Acquisition Regulation 731.2.

---

[2]When these Standard Provisions are used for cooperative agreements, the following terms apply: "Grantee" means "Recipient" "Grant" means "Coopertive Agreement," and "AID Grant Officer" means "AID Agreement Officer."

(4) Unallowable costs, direct or indirect, include but are not limited to the following examples: Advertising, bad debts, contingencies, entertainment, fines and penalties, interest, fund raising, investment management costs, losses on other awards, taxes, first class air fare unless specifically approved. Additionally, public information service costs are unallowable as indirect costs.

(b) Prior to incurring a questionable or unique cost, the grantee should obtain the grant officer's written determination as to whether the cost will be allowable.

* 2. ACCOUNTING, AUDIT, AND RECORDS (MAY 1991)

(a) The grantee shall maintain books, records, documents, and other evidence relating to the AID-sponsored project or program in accordance with generally accepted accounting principles formally prescribed by the U.S., the cooperating country, or the International Accounting Standards Committee (an affiliate of the International Federation of Accountants) to sufficiently substantive charges to this grant. Accounting records that are supported by documentation will as a minimum be adequate to show all costs incurred under the grant, receipt and use of goods and services acquired under the grant, the costs of the program supplied from other sources, and the overall progress of the program. The grantee records and subgrantee records which pertain to this grant shall be retained for a period of three years from the date of expiration of this grants and may be audited by AID and/or its representatives. The grantee shall insert this paragraph (a) in all subgrants valued in excess of $10,000.

(b) If the grantee receives $25,000 per year or more under this grant, the grantee agrees that it shall have an audit made of the funds provided under this grant and of the financial statements of the organization as a whole. The grantee shall select an independent auditor in accordance with the "Guidelines for Financial Audits Contracted by Foreign Recipients" issued by the AID Inspector General. The audit shall be a financial audit performed in accordance with such guidelines and in accordance with generally accepted government auditing standards issued by the Comptroller General of the United States. Audits shall be performed annually.

(c) The audit report shall be submitted to AID within 30 days after completion of the audit, but the audit shall be completed and the report submitted not later that 13 months after the close of the grantee's fiscal year. The AID Inspector General will review this report to determine whether it complies with the audit requirements of this grant. No audit costs may be charged to this grant if audits have not been made in accordance with the terms of this provision. In cases of continued inability or unwillingness to have an audit performed in accordance with the terms of this provision, AID will consider appropriate sanctions which may include suspension of all or a percentage of disbursements until the audit is satisfactorily completed. *

(d) The grantee shall require subgrantees that receive $25,000 or more per year under this grant to have audits performed in accordance with the requirements of this provision. The subgrantee's audit report shall be submitted to the grantee within 30 days after completion of the audit, but the audit shall be completed and the report submitted not later than 13 months after the close of the subgrantee's fiscal year. The grantee shall ensure that appropriate corrective actions are taken on the recommendations contained in subgrantees' audit reports; consider whether subgrantees' audits necessitate adjustment of its own records; and require each subgrantee to permit independent auditors to have access to records and financial statements as necessary. *

3. REFUNDS (SEPTEMBER 1990)

(a) The grantee shall remit to AID all interest earned on funds provided by AID.

(b) Funds obligated by AID but not disbursed to the grantee at the time the grant expires or is terminated shall revert to AID, except for such funds encumbered by the grantee by a legally binding transaction applicable to this grant. Any funds advanced to but not expended by the grantee at the time of expiration or termination of the grant shall be refunded to AID except for such funds encumbered by the grantee by a legally binding transaction applicable to this grant.

(c) AID reserves the right to require refund by the grantee of any amount which AID determines to have been expended for purposes not in accordance with the terms and conditions of this grant, including but not limited to costs which are not allowable in accordance with the applicable Federal cost principles or other terms and conditions of this grant. In the event that a final audit has not been performed prior to the closeout of this grant, AID retains the refund right until all claims which may result from the final audit have been resolved between AID and the grantee.

4. REVISION OF GRANT BUDGET (MAY 1986)

(a) The approved grant budget is the financial expression of the grantee's program as approved during the grant award process.

(b) The grantee shall immediately request approval from the grant officer when there is reason to believe that within the next 30 calendar days a revision of the approved grant budget will be necessary for any of the following reasons:

(1) To change the scope or the objectives of the project and/or revise the funding allocated among project objectives.

(2) Additional funding is needed.

(3) The grantee expects the amount of AID authorized funds to exceed its needs by more than $5,000 or five percent of the AID award, whichever is greater.

24

(4) The grantee plans to transfer funds budgeted for indirect costs to absorb increases in direct costs or vice versa.

(5) The grantee intends to contract or subgrant any of the work under this grant, and such contracts or subgrants were not included in the approved grant budget.

(c) Except as required by other provisions of this grant specifically stated to be an exception from this provision, the Government shall not be obligated to reimburse the grantee for costs incurred in excess of the total amount obligated under the grant. The grantee shall not be obligated to continue performance under the grant (including action under the "Termination and Suspension" provision) or otherwise to incur costs in excess of the amount obligated under the grant, unless and until the grant officer has notified the grantee in writing that such obligated amount has been increased and has specified the new grant total amount.

5. TERMINATION AND SUSPENSION (MAY 1986)

(a) For Cause. This grant may be terminated for cause at any time, in whole or in part, by the grant officer upon written notice to the grantee, whenever it is determined that the grantee has failed to comply with the conditions of the grant.

(b) For Convenience. This grant may be terminated for convenience at any time by either party, in whole or in part, if both parties agree that the continuation of the grant would not produce beneficial results commensurate with the further expenditure of funds. Both parties shall agree upon termination conditions, including the effective date and, in the case of partial terminations, the portion to be terminated. The agreement to terminate shall be set forth in a letter from the grant officer to the grantee.

(c) Suspension: Termination for Changed Circumstances. If at any time AID determines that continuation of funding for a program should be suspended or terminated because such assistance is not in the national interest of the United States or that it would be in violation of an applicable law, then AID may, following notice to the grantee, suspend this grant and prohibit the grantee from incurring additional obligations chargeable to this grant other than necessary and proper costs in accordance with the terms of this grant during the period of suspension. If the situation causing the suspension continues for 60 days or more, then AID may terminate this grant on written notice to the grantee and cancel that portion of this grant which has not been disbursed or irrevocably committed to third parties.

(d) Termination Procedures. Upon receipt of and in accordance with a termination notice as specified in either paragraph (a) or (b) above, the grantee shall take immediate action to minimize all expenditures and obligations financed by this grant and shall cancel such unliquidated obligations whenever possible. Except as provided below, no further reimbursement shall be made after the effective date of termination. The grantee shall within 30 calendar days after the effective date of such termination repay to the Government all unexpended AID funds which are not otherwise obligated by a legally binding transaction applicable to this grant. Should the funds paid by the Government to the grantee prior to the effective date of the termination of this grant be insufficient to cover the grantee's obligations in the legally binding transaction, the grantee may submit to the Government within 90 calendar days after the effective date of such termination a written claim covering such obligations. The grant officer shall determine the amount(s) to be paid by the Government to the grantee under such claim in accordance with the applicable cost principles.

5. DISPUTES (NOVEMBER 1985)

(a) Any dispute under this grant shall be decided by the AID grant officer. The grant officer shall furnish the grantee a written copy of the decision.

(b) Decisions of the AID grant officer shall be final unless, within 30 days of receipt of the decision of the grant officer, the grantee appeals the decision to AID's Deputy Assistant to the Administrator for Management Services. Any appeal made under this provision shall be in writing and addressed to the Deputy Assistant to the Administrator for Management Services, Agency for International Development, Washington, D.C. 20523. A copy of the appeal shall be concurrently furnished to the grant officer.

(c) In order to facilitate review on the record by the Deputy Assistant to the Administrator for Management Services, the grantee shall be given an opportunity to submit written evidence in support of its appeal. No hearing will be provided.

(d) A decision under this provision by the Deputy Assistant to the Administrator for Management services shall be final.

7. INELIGIBLE COUNTRIES (MAY 1986)

Unless otherwise approved by the AID grant officer, funds will only be expended for assistance to countries eligible for assistance under the Foreign Assistance Act of 1961, as amended, or under acts appropriating funds for foreign assistance.

8. DEBARMENT, SUSPENSION, AND OTHER RESPONSIBILITY MATTERS (MARCH 1989)

(1) The grantee certifies to the best of its knowledge and belief, that it and its principals:

(a) Are not presently debarred, suspended, proposed for debarment, declared ineligible, or voluntarily excluded from covered transactions by any Federal department or agency;

(b) Have not within a three-year period preceding this proposal been convicted of or had a civil judgment rendered against them for commission of fraud or a criminal offense in connection with obtaining, attempting to obtain, or performing a public (Federal, State or local) transaction or contract under a public transaction; violation of Federal or State antitrust statutes or commission of embezzlement, theft, forgery, bribery, falsification or destruction of records, making false statements, or receiving stolen property;

(c) Are not presently indicted for or otherwise criminally or civilly charged by a governmental entity (Federal, State or local) with commission of any of the offenses enumerated in paragraph (1)(b) of this certification; and

(d) Have not within a three-year period preceding this application/propsal had one or more public transactions (Federal, State or local) terminated for cause or default.

(2) The grantee agrees that, unless authorized by the Grant Officer, it will not knowingly enter into any subagreements or contracts under this grant with a person or entity that is included on the "Lists of Parties Excluded from Federal Procurement or Nonprocurement Programs". The grantee further agrees to include the following provision in any subagreements or contracts entered into under this grant:

DEBARMENT, SUSPENSION, INELIGIBILITY, AND VOLUNTARY EXCLUSION (MARCH 1989)

The recipient/contractor certifies that neither it nor its principals is presently debarred, suspended, proposed for debarment, declared ineligible, or voluntarily excluded from participation in this transaction by any Federal department or agency.

(3) The policies and procedures applicable to debarment, suspension and ineligiblity under AID-financed transactions are set forth in 22 CFR Part 208.

9. U.S. OFFICIALS NOT TO BENEFIT (NOVEMBER 1985)

No member of or delegate to the U.S. Congress or resident U.S. Commissioner shall be admitted to any share or part of this grant or to any benefit that may arise therefrom; but this provision shall not be construed to extend to this grant if made with a corporation for its general benefit.

10. NONLIABILITY (NOVEMBER 1985)

AID does not assume liability for any third party claims for damages arising out of this grant.

11. AMENDMENT (NOVEMBER 1985)

The grant may be amended by formal modifications to the basic grant document or by means of an exchange of letters between the grant officer and an appropriate official of the grantee.

12. NOTICES (NOVEMBER 1985)

Any notice given by AID or the grantee shall be sufficient only if in writing and delivered in person, mailed, or cabled as follows:

To the AID grant officer, at the address specified in the grant.

To grantee, at grantee's address shown in the grant or to such other address designated within the grant.

Notices shall be effective when delivered in accordance with this provision, or on effective date of the notice, whichever is later.

(END OF MANDATORY STANDARD PROVISIONS)

10.410
EXTRA

1. TITLE PAGE:

Preclinical Evaluation of Combination Therapy for *Trypanosoma brucei rhodesiense*

ORGANIZATION SUBMITTING PROPOSAL:
Kenyan Trypanosomiasis Research Institute (KETRI)

PROJECT IDENTIFICATION NUMBER: 10.410

PRINCIPAL INVESTIGATOR:
Adriel R. Njogu, Ph.D.
Director, Kenyan Trypanosomiasis Research Institute, KETRI
P.O. Box 362
Kikuyu, Kenya 011-254-15-432978

Co-PRINCIPAL INVESTIGATORS:
Allen B. Clarkson, Jr., Ph.D.
Assistant Professor,
Department of Medical and Molecular Parasitology
New York University Medical Center
550 First Avenue
New York, New York 10016 (212) 340-6759

Cyrus J. Bacchi, Ph.D.
Director, Haskins Laboratories
Professor, Department of Biology
Pace University
41 Park Row
New York, New York 10038 (212) 346-1264

OFFICIALS AUTHORIZED TO BIND KETRI:

Dr. Adriel R. Njogu
Director
KETRI
P.O. Box 362
Kikuyu
Telephone: 011-254-154-32397

Dr. John M. Ole Tameno
Chairman
KETRI Board of Management
P.O. Box 24843
Nairobi
Telephone: 011-254-2-564057

PROJECT STARTING DATE, DURATION AND COSTS:
Starting September 1, 1990 and lasting three years with a total budget of $150,000

Collaborating Countries: Kenya, United States

Scientific Descriptors: sleeping sickness, *Trypanosoma brucei rhodesiense*, chemotherapy, drug resistance, polyamines

Rec'd in SCI AUG 2 2 1989

29

II. SCIENTIFIC SUMMARY.

The central theme of the proposal is to develop effective chemotherapy for East African Sleeping Sickness using novel drug combinations including the antipolyamine agent DL- - difluoromethylornithine (DFMO) and to examine the biochemical basis for drug synergism between DFMO and known trypanocides. The study features collaborative efforts by KETRI and U.S. Scientists in an effort to use DFMO, nifurtimox and/or melarsoprol to develop rapidly deployable treatment regimens based on rodent model laboratory screens and the unique KETRI vervet monkey model. Biochemical studies will examine the basis for DFMO resistance found in KETRI clinical isolates of Trypanosoma brucei rhodesiense and compare aspects of polyamine metabolism and redox capability of drug sensitive and refractory isolates. The study will be done on site at KETRI by US and Kenyan scientists in existing primate and animal facilities as well as a tissue culture/biochemistry laboratory set up at KETRI, with a prior USAID PSTC grant, and at the laboratories of the U.S. investigators. The goal will be to develop an effective alternative treatment for a disease endemic in East Africa while strengthening the research capability of KETRI.

IV. BODY OF PROPOSAL

A. OVERALL AIM AND SPECIFIC OBJECTIVES;

The ultimate aim of this proposal is to develop improved chemotherapy for African sleeping sickness (human African trypanosomiasis) using combination of drugs which interact directly or indirectly with trypanothione, a cofactor unique to trypanosomes and their close relatives.

Specific Objectives:

1. The following hypothesis will be tested: The efficacy of eflornithine (difluoromethylornithine, DFMO, Ornidyl^R), a new drug for human African trypanosomiasis, can be enhanced by coadministration of melarsoprol and/or nifurtimox. Nifurtimox is known to induce oxidant stress while DFMO and melarsoprol act synergistically to make the parasites vulnerable to such stress. This hypothesis will be tested in tissue culture as well as in mouse and monkey models of sleeping sickness.

2. Previous work demonstrated that clinical isolates exhibit a range of sensitivity to the individual drugs listed above. The extent of the range remains to be determined, however. An adequate number of clinical isolates will be tested in the systems described above to allow an estimate to be made of the range of sensitivity. These results will guide the development of clinical protocols that can be expected adequately to treat all cases of sleeping sickness.

3. The biochemical basis for the differential sensitivity of isolates to DFMO will be investigated. The following possibilities will be examined: a constitutively increased dithiol content; reduced DFMO uptake; overproduction of the target enzyme, ornithine decarboxylase; and resistance of the target enzyme to the drug.

B. RELEVANCE TO DEVELOPMENT:

Both the West African and the East African forms of sleeping sickness remain a threat to large human populations in Africa. The probability of a vaccine is remote and control of the tsetse fly vector has proven difficult to maintain. The most practical approach to control of these diseases is chemotherapy. However, the current drugs are neither fully effective nor are they free of severe, and sometimes fatal, side effects. With the exception of DFMO for *Trypanosoma brucei gambiense* infections, no new drug has been introduced for these diseases in more than 40 years. Clearly there is an urgent need for a better means of treating patients having these diseases, i.e., better chemotherapy. The work proposed will, therefore, directly aid development by helping control disease.

In relation to the PSTC program, the proposed work involves the development of better tools to combat a disease specific for a wide area of Sub-Saharan Africa. The approach is through the application of the most relevant biotechnology; i.e., drug development through rational biochemical design.

C. INNOVATIVE ASPECTS:

Antipolyamine chemotherapy is itself a unique approach to the treatment of African trypanosomiasis and has been pioneered by the U.S. scientists involved in this proposal. In addition, the development of a combination chemotherapy (combining two drugs which are marginally effective or ineffective when used alone but act synergistically when combined) is likely to increase the efficacy of existing drugs. Thus the range of drug protocols available for therapy will be increased.

Not only is the proposed science innovative but the combination of training, talent and resources of the Kenyan and New York investigators will be synergistic and productive.

D. STRENGTHENING INNOVATIVE RESEARCH CAPACITY OF DEVELOPING COUNTRY INSTITUTION

The scientific expertise at KETRI already makes it one of the leading research institutions in Kenya. A core of facilities and scientific personnel have been assembled and KETRI has the potential of becoming a leading international research centre. Core funding for buildings and Kenyan support staff are provided by Kenya but the government has directed KETRI to obtain independent project funding. PSTC support and international scientific cooperation will provide urgently needed project funding as well as expanding the base of the scientific staff. Cooperation with US scientists will provide the Kenyan scientists access to the knowledge and experience of the US scientists who in turn benefit from the equivalent knowledge and experience of the Kenyan scientists. During the previous grant period there was a substantial flow of training and information in both directions.

KETRI's mission is defined by the Kenyan government as providing for Kenya (and consequently for much of Africa) the research basis for developing better means of controlling African trypanosomiasis. Since this project combines fundamental parasitological research and modern rational drug design, it fits the Kenyan government-defined mission for KETRI precisely and it fits equally well the US mission for the PSTC program.

KETRI has the necessary animal and laboratory facilities as well as scientists experienced with African trypanosomes who are interested in learning the techniques of rational drug design. The bank of trypanosomes strains maintained by KETRI is the most important anywhere. KETRI has five field stations including a clinical center so that new research findings can ultimately be developed into practical tools. The U.S. scientists have been at the forefront of trypanosome biochemistry and the development of new drugs to treat this disease. Clearly the synergistic efforts of the proposed continued collaboration will strengthen the innovative research capacity of KETRI and thus contribute to the general research capacity of Kenya.

E. BACKGROUND AND RATIONALE:

The diseases and current treatment: African trypanosomiases are a series of related diseases that afflict man and his domestic animals in about 10 million square kilometres of the African continent. They are all caused by flagellate protozoa of the genus

Trypanosoma. These trypanosomes live naturally in wild game which act as a reservoir for infection of humans and domestic animals. They are transmitted from one mammal to another by the tsetse fly and undergo a cycle of development during this process. The predominant stage in the fly is called the procyclic stage while the predominant stage in the vertebrate host is the bloodstream form (there are additional intermediate stages in both hosts but they do not directly concern this proposal).

About 50 million people in 34 African countries are at risk of human trypanosomiases. The incidence is estimated at about 20,000 new cases a year, although this is an underestimate as many cases go undetected. During epidemics, which frequently occur, the affected people flee and abandon usually fertile land they may have used for generations. Clearly this retards development.

Two forms of the disease occur in man: a quick acting East African form caused by Trypanosoma brucei rhodesiense and a slower West African form caused by Trypanosoma brucei gambiense. The Eastern form is characterized initially with fever caused by the parasites growing in the blood. Later the parasites migrate to the cerebrospinal fluid (CSF) and still later to the central nervous system (CNS) which causes complications in treatment and the characteristic sleepiness for which the disease is commonly named. Death usually occurs within a few weeks. In T. brucei gambiense the disease takes a chronic course leading to a wasting disease that may go on for years before it is fatal. In both Eastern and Western forms the fatality rate is 100% in the absence of treatment.

Prevention of the disease is aimed at blocking the vector-parasite-host transmission cycle. In theory, this can be achieved by game elimination, vaccination, vector control or mass chemotherapy. Game elimination is undesirable and vaccination is not a practical proposition in the foreseeable future since trypanosome antigenic variation allows the parasite to escape the host immune response. Although vector control can be effective, it is expensive and many insecticides have undesirable environmental effects. Tsetse traps offer promise in some situations but not all. Mass chemotherapy is not now feasible and even case by case treatment is difficult and unsure with the drugs presently available. Consequently, improved individual chemotherapy is the most suitable means of combating the disease.

Drugs were introduced for these diseases soon after the turn of the century and chemotherapy reached the present state of development during the late 1940's. Currently, human African trypanosomiasis treatment depends on only three drugs: suramin and pentamidine for early cases prior to CSF or CNS involvement; and Mel B for those cases in which the CSF or CSF and CNS have become involved (i.e., the late cases). All three of these drugs have problems with efficacy and safety. Resistance to all three underlines the urgent need for the development of new drugs. Commercial efforts are inhibited by the very high cost of developing new drugs and the fact that the expected market will not allow adequate profit to pay back development and marketing costs. Consequently, the World Bank / UNDP / WHO Special Programme for Research and Training in Tropical Diseases (TDR) has identified the

development of new trypanocides as an urgent need for developing African countries. The enlightened action of the U.S. drug company Merrell Dow Pharmaceuticals in the introduction of DFMO for Trypanosoma brucei gambiense infection is not only a welcome development but has opened up exciting possibilities of further developing antipolyamine chemotherapy. The current state of development of DFMO underlines what can be achieved by cooperation between a commercial concern and academic scientists. The inclusion of an LDC government institution will further enhance this cooperative effort.

Polyamine Background: Polyamines are small molecules with two or more amine groups. The three important members of this class are: putrescine or 1,4-diaminobutane; spermidine which is putrescine with an aminopropyl group linked to one of the amino groups of putrescine; and spermine which has aminopropyl groups on both amino groups of putrescine. The content and what is known of the function of polyamines in trypanosomatids has been reviewed (Bacchi and McCann, 1987). Besides the specific function of polyamines in energy metabolism of trypanosomes, as discussed in that review, polyamine synthesis is critical in all rapidly dividing cells (Pegg and McCann, 1986).

DFMO is an exquisitely specific inhibitor for the rate limiting step in polyamine biosynthesis: conversion of ornithine to putrescine by ornithine decarboxylase (ODC, Pegg and McCann, 1986). All other polyamines are derived from putrescine. DFMO is not metabolized except by ODC and was non-toxic in animal studies. Human clinical trials have shown it to be free of serious side effects (reviewed in Schechter and Sjoerdsma, 1987). Against model infections, DFMO acts rapidly (within 12 hours of administration) to block all ODC activity and severely depletes putrescine and spermidine. At 36 hours after initiation of treatment, DNA synthesis stops and RNA synthesis is more than 70% inhibited (Bacchi et al., 1983). These effects are entirely reversible if polyamines are co-administered with DFMO. Thus treatment with DFMO results in a non-dividing but viable parasite population which is vulnerable to the host immune response.

One of the key features of trypanosome polyamine metabolism is the presence of a unique cofactor trypanothione N^1,N^8-bis(glutathionyl) spermidine which non-enzymatically regenerates reduced glutathione (Fairlamb et al 1985). The latter functions as a critical detoxifying mechanism in general cell metabolism, protecting cells from otherwise lethal free radicals generated as inevitable byproducts of cellular metabolism. In the African trypanosomes, two trypanothione-specific enzymes, a synthase and a reductase, and trypanothione itself replace mammalian counterparts requiring glutathione making this system an inviting drug target (Fairlamb et al., 1989).

Current Clinical Experience with Antipolyamine Chemotherapy: Data from preliminary studies using DFMO to treat patients with Trypanosoma brucei gambiense infection have been presented by Sjoerdsma and Schechter (1984) and Schechter and Sjoerdsma (1987). Although that report was of a small number of cases, more extensive data have recently been collected. A total of 304 people have been treated according to the protocol approved by Merrell Dow. It is

highly likely that DFMO will become a standard therapy for Trypanosoma brucei gambiense infection.

Despite clinical success in treating West African sleeping sickness DFMO has been disappointing in brief trials with East African disease, with some cases resisting double the standard dosage and multiple treatment regimens (D. Bayles, P. deRaadt, S. Van Nieuwenhove, pers. commun.). The current outbreaks of Rhodesian sleeping sickness in Uganda, Mozambique, Tanzania and Kenya make it imperative to develop alternative treatment.

Animal Data: The difference in efficacy between the subspecies of T. brucei has been supported by experiments in rodents. As a result of PSTC-supported working visits by the US scientists to KETRI, 14 KETRI clinical isolates of T. b. rhodesiense have been studied and characterized with respect to sensitivity to DFMO. Several of these are refractory to dose levels of Mel B, melarsen oxide, Berenil and pentamidine which cure the standard laboratory strain of T. b. brucei, LAB 110 (EATRO). The methods and other details are presented in Bacchi et al. (1989) which is appended to this proposal. These studies identified KETRI 243 (Uganda, 1961) and 2538 (Mozambique, 1980) as refractory to DFMO as well as the older drugs. Both strains had been described in KETRI log books as arsenical resistant and of human origin. A large number of frozen stabilates have been made, so that inocula are not more than 3 passages removed from the original strain bank isolate.

Reason for the Selectivity of DFMO for Trypanosomes: Recent conclusions as to the cause for the selective action of DFMO against the parasite may also relate to the observed difference in DFMO activity against the two forms of the disease.

One hypothesis originally considered for the selective action of DFMO was a possible greater sensitivity of the parasite ODC as compared to host ODC. Another was that the parasite might accumulate the drug. Neither of these occur to an extent necessary to account for the observed differential action against the parasite (Bitonti et al., 1986).

The immune system is a partner in the clearance of parasites since DFMO treatment of immunosuppressed and infected animals stops parasite multiplication but does not lead to a decline in parasitemia (DeGee et al., 1983; Bitonti et al., 1988b). DFMO is thus trypanostatic and not trypanocidal so that DFMO cure is dependent on active cooperation with the immune system. Thus the selective action of DFMO on the parasites as compared to the host (which also needs polyamines) is in part due to the host immune response to the parasites.

In addition to the general cytostatic action of DFMO which favors the host, the biochemical basis for the efficacy of DFMO appears to be based on several key factors:

1) the long half life of ODC in trypanosomes and its slow turnover as opposed to the host (Phillips et al 1987; Bacchi et al, 1989);

2) depletion of trypanothione, critical to the parasite, as a result of depletion of spermidine (Fairlamb et al 1987);

3) absence of endogenous spermine in trypanosomes

4) the low transport rate of polyamines in untreated cells (Bacchi et al 1983);

5) maintenance of high intracellular DFMO levels in trypanosomes during treatment (Bellofatto et al 1987).

Fairlamb et al. (1989) has identified an As-trypanothione adduct as the key to the action of Mel B and melarsen oxide. Therefore overproduction of trypanothione and precursers could be a mechanism of resistance to both DFMO and arsenicals. Therefore levels of trypanothione and its precursors should be examined in DFMO- resistant and -sensitive strains: overproduction of these intermediates would interfere with the efficacy of both DFMO and arsenicals. High levels of trypanothione synthetic enzymes and/or the reductase may be the contributing cause of resistance, and any study examining resistance needs to address these potential factors.

Synergism of Trypanocidal Drugs with DFMO: Our previous work has shown that DFMO not only enhanced the effect of the immune response but also enhances the action of several trypanocidal drugs (McCann et al., 1983; Clarkson et al., 1983; Clarkson et al., 1984; Bacchi et al., 1987). Therefore, the logical approach to devising an improved response to DFMO for a *Trypanosoma brucei rhodesiense*-infected host is to add a trypanocidal drug to compensate for a less effective immune system.

In light of the current outbreak of East African disease, it is important rapidly to develop treatment regimens that will be immediately usable in the field. A major effort will be made to develop combination chemotherapy based on existing drugs using agents which may act synergistically. As noted earlier, a significant metabolic link between DFMO and arsenicals has been established in the reduction of trypanothione levels through spermidine depletion and its reaction with and inactivation by As (Fairlamb & Henderson, 1987; Fairlamb et al., 1987; Fairlamb et al., 1989). Closely related to this is the action of nitrofurans such as nifurtimox which are active against Chagas' disease (Docampo & Moreno, 1986). These agents act by promoting the accumulation of oxygen species (e.g. H_2O_2) which in turn can lead to production of toxic hydroxyl radicals. The detoxifying mechanism for H_2O_2 is reduction to H_2O via trypanothione and a trypanothione specific peroxidase. Since a decrease in trypanothione content can be effected by DFMO, and inactivation of the remaining free trypanothione may be effected by arsenicals, further oxidant stress can be developed by nitrofurans, nitroimidazoles or quinones (Fairlamb et al. 1989). Indeed, naphthoquinone and nitrofuran derivatives (including nifurtimox) undergo redox cycling as substrates for trypanothione reductase and generate superoxide radicals in the process (Henderson et al 1988).

Evidence for drug synergism has been demonstrated in chronic *T. b. brucei* infection (Jennings 1988) in which model infections were cured by sequential dosing with DFMO and melarsoprol. In Table 1, combination studies using non-curative levels of DFMO, Melarsen oxide and nifurtimox are presented. Nifurtimox alone is ineffective at doses up to [illegible]0 mg/kg (not shown).

Table I: Activity of DFMO, melarsen oxide and nifurtimox against T.b. rhodesiense KETRO 243 T.b. brucei EATRO 110. Mice were infected 24 h. prior to administration of drugs. DFMO was given in the drinking water continuously for 3 days; melarsen oxide and nifurtimox were given in separate i.p. injections, separated by 1 h. once daily for 3 days concurrently with DFMO.

Compound	Dose	RX	Strain 243	Strain EATRO 110	% cured
Melarsen Oxide	0.5	3X	20.4 0/5	15.9 5/20	25
DFMO	0.25%	3X	22.6 0/5	6.2 0/5	0
Nifurtimox	12.5	3X	18.2 0/5	6.8 0/5	0
Nifurtimox	25	3X	19.0 0/5	6.0 0/5	0
Mel Ox/DFMO	0.5/0.25%	3X		14.8 3/15	20
Mel/DFMO/NIF	0.5/.25%/12.5	3X	26.0 0/5	30.2 2/5	40
Mel/DFMO/NIF	0.5/.25%/25	3X	31.2 0/5	34.5 8/10	80
Control			18.4 0/5	5.8 0/15	

In this table Nifurtimox at 12.5 to 25 mg/kg in combination with melarsen oxide at 0.5 mg/kg and DFMO at 0.25% (one eighth the normal curative dose) cured the acute EATRO 110 infection. This same dose regimen increased by 72% the average survival of animals infected with the Mel B- and DFMO-resistant KETRI 243 from 18.4 to 31.2 days. Each group of experiments was run as a set at the same time using a common inoculum. Although there were no cures with KETRI 243, it is important to note that this strain was resistant to DFMO at up to 4% for 6 days, and was not responsive to Mel B or melarsen oxide at 10 mg/kg (Table 1). We intend to expand these studies using higher dose levels and sequential treatment regimens.

We have tested another strain of Trypanosoma brucei brucei which requires 20 mg/kg suramin to effect a cure after CNS

infection has become established. This illustrates the need to examine multiple strains of the two subspecies to look for differences in drug sensitivity.

Parallel experiments designed to detect possible enhancement of suramin toxicity by DFMO are currently underway in New York. We think that there is little likelihood of an adverse interaction between these two drugs but the possibility must be considered and examined directly.

DFMO analogs: Compounds structurally related to DFMO are expected to become available during the period of the grant. These will be evaluated alone and in combination with other drugs.

Experimental Models: In general, drug development involves the screening of chemical compounds and sometimes combinations of compounds for trypanocidal activity. Classically this is done in rodents and a suitable rodent screening model exists at KETRI. However, due to the expense and time-consuming nature of primary rodent screening systems, the development of a primary *in vitro* system utilizing the stages of the parasite found in the vertebrate host offers considerable advantages. A new axenic culture system has recently been developed (see below) and it should be very suitable for primary drug screening. A further benefit of the *in vitro* models is that they may be able to guide combination chemotherapy by allowing manipulation of doses and dose sequencing, a difficult and expensive exercise using *in vivo* models. Combination and sequencing studies are currently being done in New York with cultures of procyclic forms.

Utilizing the original *in vitro* system of cultivation of bloodstream forms of African trypanosomes (Hirumi et al., 1977), drug screening using *Trypanosoma brucei brucei* was recently established (Borowy et al., 1985). However, this system supports only selected strains of parasites and is complicated by the presence of a required feeder layer of mammalian cells. A more recent development utilizes a feeder layer-free system which supports a wider range of cell isolates (Baltz et al., 1985). This is a very significant finding for *in vitro* chemotherapy studies since it is more practical and allows better control of culture conditions by eliminating the complication of co-cultivation of two cell types. This is especially important for the study of a slow acting drug like DFMO (the effect on the parasite on the whole is slow although the effect on the biochemical target is relatively fast).

The ability to use an axenic culture of bloodstream parasites will also enable a direct measurement of effects of drugs on parasite metabolism which is not possible when a feeder layer is used. Biochemical studies which are relevant to chemotherapy such as those involving drug uptake, polyamine uptake, the effect of drug on protein and nucleic acid synthesis and on glycolysis are all made more practical by an axenic culture system.

It should also be noted that after an *in vitro* primary screen the compounds with activity must then be further evaluated in early and late stage rodent models. The most effective protocols must then be evaluated in a primate model.

Acute Mouse Models: We define an acute mouse model as a short term infection in which the disease has not progressed to the CNS.

This is operationally defined as a model which can be cured by berenil, a drug which does not cross the blood-brain barrier. Previous work by ourselves and other (Jennings et al., 1977; Jennings and Gray, 1983; Clarkson et al., 1983) has validated this operational definition. Another aspect of acute models is that since the animal has not been infected very long, the immunosuppression associated with trypanosomiasis is not severe. The drug response of the acute model is no doubt affected by both of these conditions; i.e., no involvement of the CNS and little immunosuppression. The acute models are generally easier to treat and are thought to model the early stage of human sleeping sickness. Also, we believe that the drug response of the acute model more closely relates to the sensitivity of the parasite to the drug than is the case in a model with more advanced disease.

Inoculation with a relatively large number of parasites will generally induce an acute type infection and one with a parasitemia easily detectable in blood films. Treatment of this type model should be initiated within 4 days of inoculation.

Mouse CNS Models: Our results and those of others (Jennings et al., 1977; Jennings and Gray, 1983; Clarkson et al., 1983; Bacchi et al., 1987) have shown that mouse infections that have lasted more than 21 days have progressed to the CNS stage. Mice infected for this period are no longer cured by berenil although blood parasites are eliminated. Brain tissue from berenil-treated mice is able to transfer the infection but other tissues are not. After the effect of berenil treatment diminishes due to a decline in the concentration of the drug, the parasites in the brain eventually reestablish a parasitemia.

Not all strains of parasites establish CNS infections because some are so virulent that the mice do not survive for 3 weeks. We expect that such strains can be modulated to allow a CNS infection by treating with sub-curative berenil. This treatment will hold the systemic infection in check and allow time for the parasites to become established in the CNS.

Comparison of *in vitro* and *in vivo* Results to Discriminate Between Inherent Parasite Sensitivity and Pharmacokinetics / Parasite Distribution Problems: The results of drug protocols applied to parasites in culture, in acute models and in mouse CNS models will allow us to determine the cause for any difference in sensitivity of the different *Trypanosoma brucei rhodesiense* strains to the various drug protocols. The following background information is essential for interpretation of the results.

We know that there is no immune response in an *in vitro* system so that the degree of inhibition of growth *in vitro* will reflect the inherent sensitivity of that parasite independent of a host. We also know that there is a progressive state of immunosuppression associated with infection with African trypanosomes as is illustrated by an earlier study we made of the course of immunosuppression in one of the mouse/parasite pairs used in our CNS model (Amole et al., 1982). The development of full immunosuppression occurs over the same period during which the model becomes refractory to berenil treatment (refractoriness demonstrated that mice with short term infections are cured more easily with DFMO as would be expected). Therefore we believe that

the response in the acute mouse model reflects the ability of the mouse to control the infection when the CNS has not become involved and when immunosuppression is not so severe. The mouse CNS model is by far the most difficult to cure as the drug must overcome parasites sequestered where drug delivery is difficult and when there is little help from the immune system. Therefore to treat the CNS model the drug(s) must stop the parasite from dividing and substitute for an ineffective immune system.

In summary, the *in vitro* system will produce data on the inherent sensitivity of the parasite to the drug protocol. The acute mouse model will reveal the sensitivity of the parasite to the drug protocol when combined with an immune reaction. The chronic *in vivo* model will reveal the ability of a drug protocol to cure when there is a much reduced immune response and the parasites are protected by pharmacological barriers.

Examination of the Biochemical Basis for Any Inherent Parasite Resistance: We have found 7 of 16 KETRI *T. brucei rhodesiense* isolates refractory to DFMO treatment using a mouse model of an acute infection. The level of resistance in some cases was greater than 8 fold, and some strains were not cured by 4% DFMO for 9 days. Details are given in the appended manuscript (Bacchi et al., submitted). In studies done in other laboratories, procyclic forms (vector stage) were made resistant to DFMO by continued subpassage with increasing DFMO concentration in vitro. (Phillips and Wang, 1987). The reasons for this resistance varied: in one case it was attributed to reduced uptake of DFMO (Phillips and Wang, 1987) and in the other to continued maintenance of trypanothione levels in the presence of drug (Bellofatto et al., 1987). We will examine the basis for the natural resistance expressed in these clinical isolates. Such resistance could be due to: an ODC with less sensitivity to DFMO; a parasite which takes up DFMO less well; a parasite which develops an alternate pathway for putrescine synthesis; overproduction or deregulation of ODC; or a parasite particularly adept at scavenging polyamines from its host.

Vervet Monkey Model System: At KETRI, Schmidt and Sayer (1982) developed a vervet monkey (*Cercopithecus aethiopes*) model in which *Trypanosoma brucei rhodesiense* parasites appear in the blood of monkeys seven days post infection. Between days 14 and 21 the parasites reach the cerebrospinal fluid. If left untreated the monkeys die within 55 to 80 days. If, however, a subcurative dose of berenil is given, the parasites disappear and then relapse within a month. Subsequently, within 3 months of relapse encephalitis occurs. The clinical and pathological picture of these encephalitic monkeys mimics very closely the late stage condition in man. DFMO and other polyamine synthesis inhibitors, alone or in combination, can be evaluated at every stage of this disease in this monkey model thus providing extremely valuable preclinical data.

We expect that the four models described above will reflect the range in response which will eventually be seen in clinical trials against *Trypanosoma brucei rhodesiense*.

F: TECHNICAL WORK PLAN:

a. General Hypothesis. For the reasons outlined above we

believe that DFMO, Mel B and nifurtimox should be highly synergistic thus the combination is likely to be efficacious for all African trypanosome infections. Since melarsoprol and nifurtimox are available for human use now and DFMO is expected to be routinely available very soon, promising results from the proposed work could be put into use very quickly. It is expected that a combination of very low doses of each compound will be effective thus toxic side effects should be avoided. It is also realistic to expect that an understanding of the resistance of T. brucei rhodesiense to DFMO will lead to means of overcoming that resistance.

b. Experimental Approach. To define the optimal ratio of the three drugs, we plan a serial approach. The first step will be examination of the effect of combinations against bloodstream T. brucei rhodesiense (i.e., infective forms) in tissue culture, a technique in routine use at KETRI. A three-way drug matrix will be used and the results will be analyzed using isobolograms made by plotting a chosen degree of effectiveness against varying concentrations of two or more drugs. Effectiveness for the individual drugs and combinations will be defined as complete eradication of the parasites in a culture well within a given time period (chosen empirically after pilot experiments). Isobolograms will be formed by plotting the minimal concentrations of the drugs that reach this chosen degree of effectiveness (Berenbaum, 1978). A two drug isobologram forms a 2 dimensional line plot and a three drug combination a 3 dimensional surface plot. KETRI has IBM PS/2 computers and we have software that will produce the 3 dimensional surface plots required. The isobolograms will reveal the ratios that result in optimal synergism. Although such studies do not address pharmacokinetic issues, we predict that they will allow estimates of relative effectiveness in vivo. For example, they will allow one to estimate the proportional increase in one component that will be required to compensate for a proportional decrease in another component.

The second step will utilize mice infected with T. brucei rhodesiense. The minimum dose for 100% cure will be determined separately for each drug in mice and this data will be used with isobolograms from the tissue culture results to predict useful combination doses. For example, suppose that a point of an isobologram shows that all the parasites can be killed in vitro with a combination of 10% of the amount of drug A, plus 5% of B and 9% of C relative to the amount required to kill 100% of the parasites if each drug was used alone. The in vivo starting point would therefore be with these percentages of the minimum in vivo doses for the single drugs. One very important point to test in vivo from the in vitro data is that isobologram point when each drug is at the least percentage of its toxic dose.

The transfer of the synergistic ratios may not be 1:1 from tissue culture to mice but there can be little doubt that the tissue culture will offer a very useful guide. The value of such a guide is readily realized if one were to consider testing in mice a matrix of 3 drugs at 10 doses for each drug. The matrix yields 1,000 dosages. If 5 mice were used for each dose, this would require 5,000 mice. The numbers grow geometrically with any

variation in the duration of the doses and with use of multiple strains. On the other hand, a dozen 96 well plates can be used to test 1,000 doses, including controls.

The third step in the evaluation of the triple combination will be a translation of the tissue culture and mouse results to monkeys. This phase will, of necessity, be restricted due to the number of monkeys that can be used but it is a very important preclinical evaluation stage. Fortunately, KETRI has an excellent monkey colony.

Both the second and third steps will utilize models of sleeping sickness that involve the central nervous system (CNS) as well as acute, non-CNS models. Drs. Clarkson and Bacchi have experience with mouse CNS models and KETRI has developed a monkey CNS model. CNS models are important because this is the most difficult stage of the disease to treat. However, we can anticipate success since all three drugs are active against CNS infections when used singly. Knowledge of the ratio of the effective dosage for CNS disease to that for non-CNS disease will be very useful for eventual clinical application. We expect that a single safe protocol can be found that is effective for all stages of the disease, a very desirable situation. However, if a situation should arise in which a standardized triple combination protocol is not effective, the preclinical data we propose to collect will guide the modification of such a protocol to provide an effective therapy in that situation.

c. **Spectrum of DFMO sensitivity; In Vivo Combination Chemotherapy Using Mouse Infections.** We will further refine our estimate of the natural spectrum of T. brucei rhodesiense sensitivity to DFMO in East Africa. The most important point is to obtain an estimate of the maximum degree of resistance that can be expected to be encountered. T. brucei rhodesiense-infected mice will be used because it is difficult to establish a large number of strains *in vitro*.

This part of the project is very straight forward but is expected to be of major value in projecting the usefulness of DFMO therapy both alone and in combination with other drugs. The procedure will be to inoculate groups of mice and treat with graded doses of DFMO. From this screen of parasite isolates we will select those showing no resistance, moderate resistance and a high resistance to DFMO for the three drug matrix study described in A. This has been done for an initial group of 14 strains, under the prior PSTC proposal as detailed in the appended manuscript.

As noted earlier, we have found synergism between DFMO, arsenicals and nifurtimox. These studies will be broadened and employ increased doses of these agents, especially DFMO. Initially, combination studies will be with mice infected for 24 h prior to treatment. The rapid initiation of treatment should not allow CNS infections to develop. We will use sequential dosing, initiating DFMO administration prior to melarsen oxide and nifurtimox and continuing through at least part of the Mel B and nifurtimox treatment. We found this type of regimen enhanced the synergism of DFMO/bleomycin (McCann et al., 1981) and this appears to hold for DFMO/melarsen oxide (Jennings, 1988). Any separation (even 1 day) between administration of DFMO and the other agent will

significantly decrease efficacy. Tail vein blood films will be examined weekly as will the buffy coat from hematocrit tube determinations. In the calculation of synergism between these agents, the method of Berenbaum (1978) will be used to plot data as 3 agent isobolograms, as noted for tissue culture models.

Once cures are reliably obtained with early stage infections we will examine the activity of combinations against late stage CNS infections. For the standard mouse CNS model, the infection is allowed to progress for 21 days prior to initiation of treatment. However, since many strains cause CNS infection within 1 week and some of the strains of interest kill within 10 days, quicker CNS models will be used when they are both possible and necessary. Since most strains are sensitive to suramin, the infections will be allowed to develop 5-10 days before treating with this agent. Should suramin clear the blood and these animals subsequently relapse, this will be taken as evidence of CNS infections. Combination regimens against CNS infections will necessarily involve a longer (probably 2 week) DFMO regimen with melarsen and nifurtimox treatment occurring later in the DFMO regimen.

d. **Primate Evaluation.** Drug combinations proving successful will be tested on the vervet monkey model of Schmidt and Sayer (1982). Each monkey will be injected intravenously with about 10^4 trypanosomes of KETRI 2537. Blood films from the ear vein will be checked daily for parasitemia. Every two weeks the monkeys will be sedated and given another overall medical examination. At the same time a lumbar puncture will be performed and CSF will be collected to check for parasites, protein concentration, white blood cell count and IgM level. Treatment will be initiated in some of the monkeys between 24 and 35 days when previous experience indicates that the monkey will have trypanosomes in the CSF, but not in brain tissue. This is called stage I late disease. Hence when a monkey is treated at this stage of the infection, the ability of a drug to clear trypanosomes from CSF is tested. After 35 days of infection other monkeys will be treated with berenil at a dose rate of 2-5 mg/kg/day for 3 days to clear the bloodstream of trypanosomes thus producing a temporary clinical improvement in the monkey. About 2-3 months after the berenil treatment, the trypanosomes begin to reappear in the blood and CSF. The monkey's clinical condition begins to deteriorate again and this is followed by encephalitis. These monkeys will have reached Stage II. Experimental protocols successful for Stage I disease will be tested in Stage II monkeys. The success of treatment of Stage II monkeys will be monitored by examination of weekly blood films for 600 days post treatment in order to confirm successful treatment.

e. <u>Biochemical Studies</u>. Four possible mechanisms of resistance to DFMO will be considered: 1) overproduction of reduced thiols, i.e., overproduction of trypanothione; 2: reduced uptake of DFMO; 3) overproduction of ODC, the target enzyme; and 4) reduction in the sensitivity of ODC to DFMO. Any of these mechanisms could spare the parasite and each will be examined.

i. <u>Trypanothione metabolism</u>. Tolerance to DFMO/arsenicals by <u>T. b. rhodesiense</u> may be due to altered intracellular levels of trypanothione. Trypanothione metabolism will be studied by quantitation of trypanothione and the N^1- and N^8- glutathionyl

spermidine levels in sensitive and refractory isolates and by measuring levels of trypanothione reductase. A first step will be to determine if there are changes in total thiol pool sizes; this would be done using 5,5[1]-dithio bis(2-nitrobenzoic acid) (DTNB) which reacts with free sulfhydryl groups resulting in an absorbance increase at 412 nm. The method employed is that of Ellman (1959) in which acid extracts are added to 1.0 M phosphate buffer (pH 8.0) and read immediately upon addition of DTNB. Thiol concentration in the sample is determined from a standard graph using glutathione and is then compared to total thiols in isolates. This fast, easily reproducible and sensitive (detects 50 uM thiols) method will be used for rapid preliminary screening. The levels of specific thiols can then be determined by HPLC separation using a reverse phase C-18 ultrasphere column (5 um particle size: Shin and Fairlamb 1988). The latter studies would be done in Dr. Bacchi's laboratory in New York.

ii. Uptake of DFMO. This will be measured in bloodstream forms harvested from rats and suspended in drug in a physiological medium (MEM + 10% FBS), as described previously (Bitonti et al. 1986).

iii. Overproduction of ODC. We will examine ODC activity carefully: grossly elevated ODC levels and K_i values for DFMO markedly higher than found in susceptible strains would indicate overproduction of the enzyme or production of ODC with an altered active site as basic mechanism of resistance. Time dependent inhibition kinetics will be used to determine K_i values for DFMO as in Bitonti et al. (1985).

Parasite Strains. KETRI maintains and has expanded the former EATRO strain bank (now the KETRI bank) and has an extensive collection of *T. b. rhodesiense* stocks in liquid nitrogen. At this time, 14 isolates have been tested in a mouse system for susceptibility to DFMO and standard trypanocides, as described in the appended manuscript (Bacchi et al. 1989). Additional clinical isolates would be sought preferably those from patients known to have failed one or more clinical treatment regimens, for incorporation into the overall data base to define the range of drug susceptibility. Another advantage of KETRI is the Sleeping Sickness hospital at Alupe on the Kenya/Uganda boarder. This facility, a branch of KETRI, annually treats patients from both countries where the disease is endemic. Drug refractory isolates can be isolated from patients and stabilates produced in immunosuppressed mice. The clinic, and laboratory facilities are located within the same compound.

Drugs to be studied. DFMO will be obtained from the Merrell Dow Research Institute, Cincinnati, OH. Dr. Peter McCann of the Institute has been a collaborator and coauthor with the American investigators on numerous publications involving the mode of action of DFMO and its efficacy in model trypanosome infections.

Melarsen oxide and Mel B, arsenicals which form the mainstay of late stage treatment are available from Specia, a division of Rhone-Poulenc, Paris.

Nifurtimox is available in tablet form. Additional analogs of DFMO or other polyamine antagonists will become available from the pharmaceutical industry during the course of the proposal.

Literature Cited

1. Amole, B.A., Clarkson, A.B. and Shear, H.L. 1982. Inf. Imm. 36, 1060-1068.

2. Bacchi, C.J., Garofalo, J., Santana, A., Hannan, J.C. and McCann, P.P. 1989. Experimen. Parasitol. 68, 392-402.

3. Bacchi, C.J. and McCann, P.P. 1987. In Inhibition of Polyamine Metabolism, P.P. McCann, A.E. Pegg, A. Sjoerdsma, eds. pp 317-344. Academic Press, New York.

4. Bacchi, C.J., Nathan, H.C., Clarkson, A.B. Jr., Bienen, A.J., McCann, P.P. and Sjoerdsma, A. 1987a. Am. J. Trop. Med. Hyg. 36, 48-54.

5. Baltz, T., Baltz, O., Giroud, C. and Crocket, J. 1985. EMBO. J. 4, 1273-1277.

6. Bellofatto, V., Fairlamb, A.H., Henderson, G. B. and Cross, G.A.M. 1987. Mol. Biochem. Parasitol. 25, 227-238.

7. Berenbaum, M.C. 1978. J. Infect. Dis. 137, 122-130.

8. Bitonti, A.J., Bacchi, C.J., McCann, P.P. and Sjoerdsma, A. 1985. Biochem. Pharmacol. 34, 1773-1777.

9. Bitonti, A.J., Dumont, J.A. and McCann, P.P. 1986a. Biochem. J. 237, 685-689.

10. Boroway, N.K., Hirumi, H., Waithaka, H.K. and Mkoji, G. 1985. Drugs Exptl. Clin. Res. 3, 155-161.

11. Clarkson, A.B. Jr., Bacchi, C.J., Mellow, G.H., Nathan, H.C., McCann, P.P. and Sjoerdsma, A. 1983. Proc. Natl. Acad. Sci. USA 80, 5729-5733.

12. Clarkson, A.B. Jr., Bienen, E.J., Bacchi, C.J., McCann, P.P., Hutner, S.H. and Sjoerdsma, A. 1984. Am. J. Trop. Med. Hyg. 33, 1073-1077.

13. deGee, A.L.W., McCann, P.P. and Mansfield, J.M. 1983. J. Parasitol. 69, 818-822.

14. Docampo, R. and Moreno, S.N.J. 1986. Fed. Proc. 45, 2471-2476.

15. Ellman, G.D. 1959. Arch. Biochem. Biophys. 82, 70-77.

16. Fairlamb, A.H., Blackburn, P., Ulrich, P., Chait, B.T. and Cerami, A. 1985. Science 2227, 1485-1487.

17. Fairlamb, A.H. and Henderson, B.G. 1987. In Host-Parasite and Molecular Interactions in Protozoal Infections, K.P. Chang, D. Snary, eds. pp 29-40. Springer-Verlag, Berlin.

18. Fairlamb, A.H., Henderson, G.B., Bacchi, C.J. and Cerami, A. 1987. Mol. Biochem. Parasitol. 24, 185-191.

19. Fairlamb, A.H., Henderson, G.B. and Cerami, A. 1989. Proc. Natl. Acad. Sci. USA 86, 2607-2611.

20. Henderson, G.E., Ulrich, P., Fairlamb, A.H., Rosenberg, I., Periera, M., Sela, M. and Cerami, A. 1988. Proc. Natl. Acad. Sci. USA 85, 5374-5378.

21. Jennings, F.W. 1988. Bull. Soc. Path. Ex. 81, 595-607.

22. Jennings, F.W. and Gray, G.D. 1983. Contr. Microbiol. Immunol. 7, 147-154.

23. Jennings, F.W., Whitelaw, D.D. and Urquhart, G.W. 1977. Parasitology 75, 143-153.

24. McCann, P.P., Bacchi, C.J., Clarkson, A.B. Jr., Seed, J.R., Nathan, H.C., Amole, B.O., Hutner, S.H. and Sjoerdsma, A. 1981. Med. Biol. (Helsinki) 59, 434-440.

25. McCann, P.P., Bacchi, C.J., Nathan, H.C. and Sjoerdsma, A. 1983. In Mechanisms of Drug Action, T.P. Singer, R.N. Ondarza, eds., pp 159-173. Academi Press, New York.

26. Pegg, A.E. 1986. Biochem. J. 234, 249-262.

27. Phillips, M.A., Coffins, P. and Wang, C.C. 1987. J. Biol. Chem. 262, 8721-8727.

28. Phillips, M.A. and Wang, C.C. 1987. Mol. Biochem. Parasitol. 22, 9-17.

29. Schechter, P.J., Barlow, J.L. and Sjoerdsma, A. 1987. In Inhibition of Polyamine Metabolism, P.P. McCann, A.E. Pegg, A. Sjoerdsma, eds., pp 345-361. Academic Press, New York.

30. Schmidt, H. and Sayer, P. 1982. Tropenmed. Parasitol. 33, 249-254.

31. Shim, H. and Fairlamb, A.H. 1988. J. Gen. Microbiol. 134, 807-817.

32. Sjoerdsma, A. and Schechter, P.J. 1984. Clin. Pharmacol. Ther. 35, 287-300.

46

BUDGET

First Year:			
Salary Support for Kenyan Scientists			
Person 1: J.Auma	US$ 6,500.00		
Person 2: C.Masiga	6,500.00		
Subtotal		13,000.00	
Travel Costs for U.S. Scentists to Kenya			
Air fare for 4 roundtrip tickets	12,800.00		
Per diem @$40.00 for 85 days	3,400.00		
Subtotal		16,200.00	
Equipment:			
LKB Ultraspec Spectrophotometer	8,500.00		
Microcomputer for above instrument	2,500.00		
Cell harvester	1,000.00		
Analytical balance	1,700.00		
Top loading balance	1,100.00		
Animal cages and water bottles	1,500.00		
Subtotal		16,300.00	
Supplies/animals		10,000.00	
Administrative support		2,000.00	
Total for First Year			57,500.00
Second Year:			
Salary Support for Kenyan Scientists			
Person 1: J.Auma	US$ 6,500.00		
Person 2: C.Masiga		6,500.00	
Subtotal		13,000.00	
Travel Costs for U.S. Scientists to Kenya			
Air fare for 4 roundtrip tickets	13,500.00		
Per diem @$45.00 for 84 days	3,800.00		
Subtotal		17,300.00	
Travel Costs for Kenyan Scientist to U.S.			
Air fare for 1 roundtrip ticket	3,500.00		
Per diem @$110.00 for 30 days	3,300.00		
Subtotal		6,800.00	
Supplies/animals		10,100.00	
Administrative support		2,000.00	
Total for Second Year			49,200.00
Third Year:			
Salary Support for Kenyan Scientists			
Person 1: J.Auma	US$ 6,500.00		
Person 2: C.Masiga	6,500.00		
Subtotal		13,000.00	
Travel Costs for U.S. Scientists to Kenya			
Airfare for 4 roundtrip tickets	14,000.00		
Per diem @$50.00 for 84 days	4,200.00		
Subtotal		18,200.00	
Supplies		10,100.00	
Administrative support		2,000.00	
Total for Third Year			43,300.00
GRAND TOTAL		US $150,000	

47

PHARMACOKINETIC DATA

α-DFMO Levels Measured in Serum and CNS from Monkey Trials

Project USAID

		Animal No. 35		Animal No. 50	
No.	Time	Serum α-DFMO (μM)	CNF α-DFMO (μM)	Serum α-DFMO (μM)	CNF α-DFMO (μM)
1	-10 min	54.6	5.2	60.25	4.0
2	15 "	44.7		73.7	
3	30 "	57.4		54.5	
4	45 "	53.5		70.	
5	60 "	65.6	7.8	94.5	6.3
6	3 h	271.6	4.5	164.	5.5
7	6 "	149.	2.1	116.	3.7
8	12 "	100.	4.0	77.4	3.9
9	24 "	45.	3.7	45.6	2.7
10	72 "	24.6	2.1	25.8	1.1
11	7 days	12.	ND	27.1	ND

The above pharmacokinetic data were obtained using uninfected KETRI vervet monkeys given various dose regimens of DFMO. The drug was administered per os in fruit juice. Blood and CSF samples were obtained under anaesthesia.

This data was not previously available and is instead for assessment of drug dosage in infected animals

In the following figures clear circles represent Berum values, solid circles are CSF values

Monkey # 35

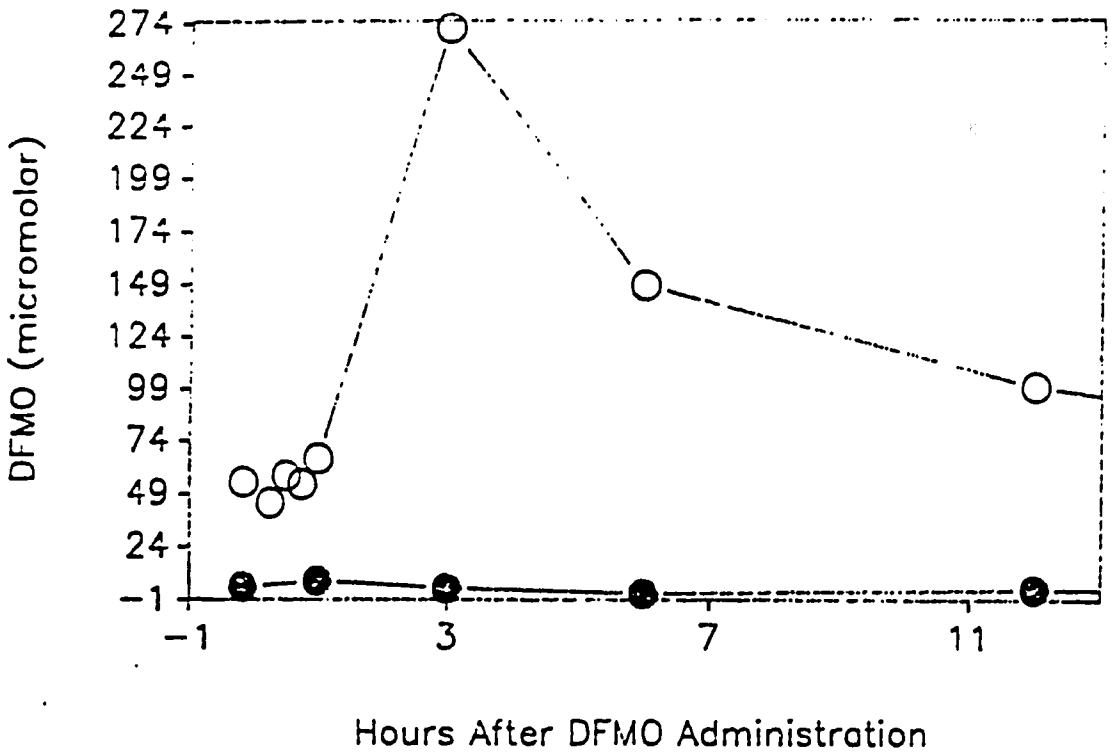

Monkey # 35

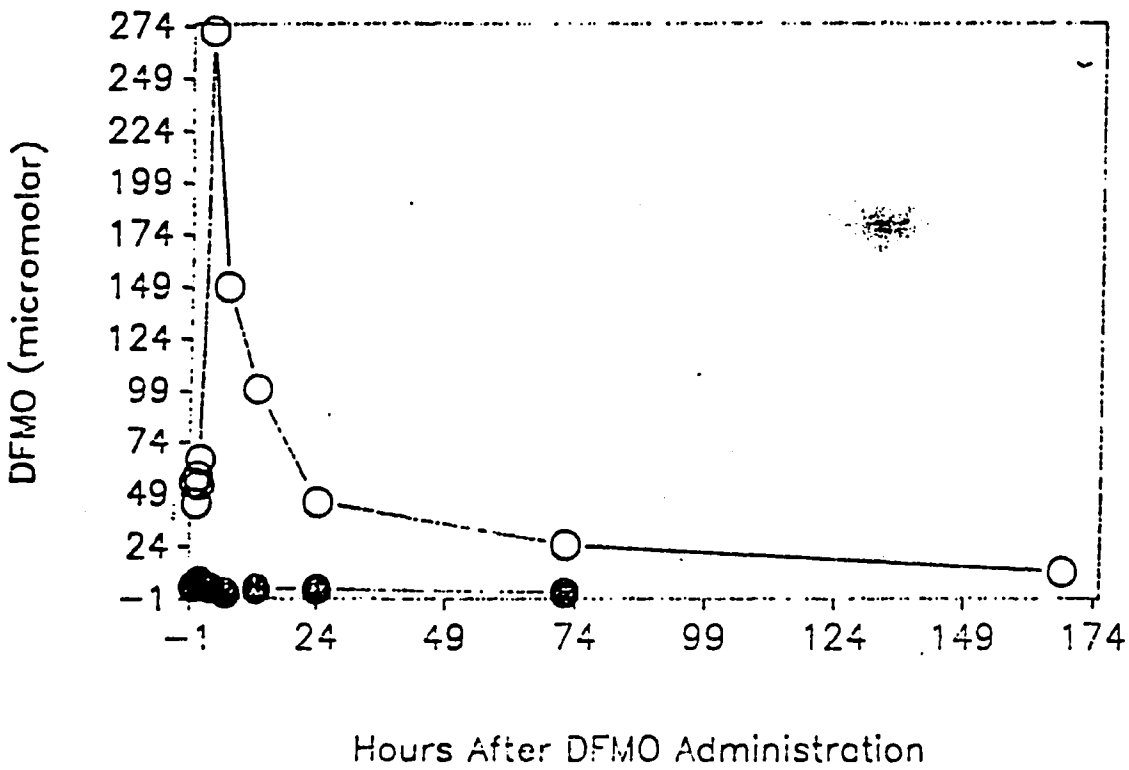

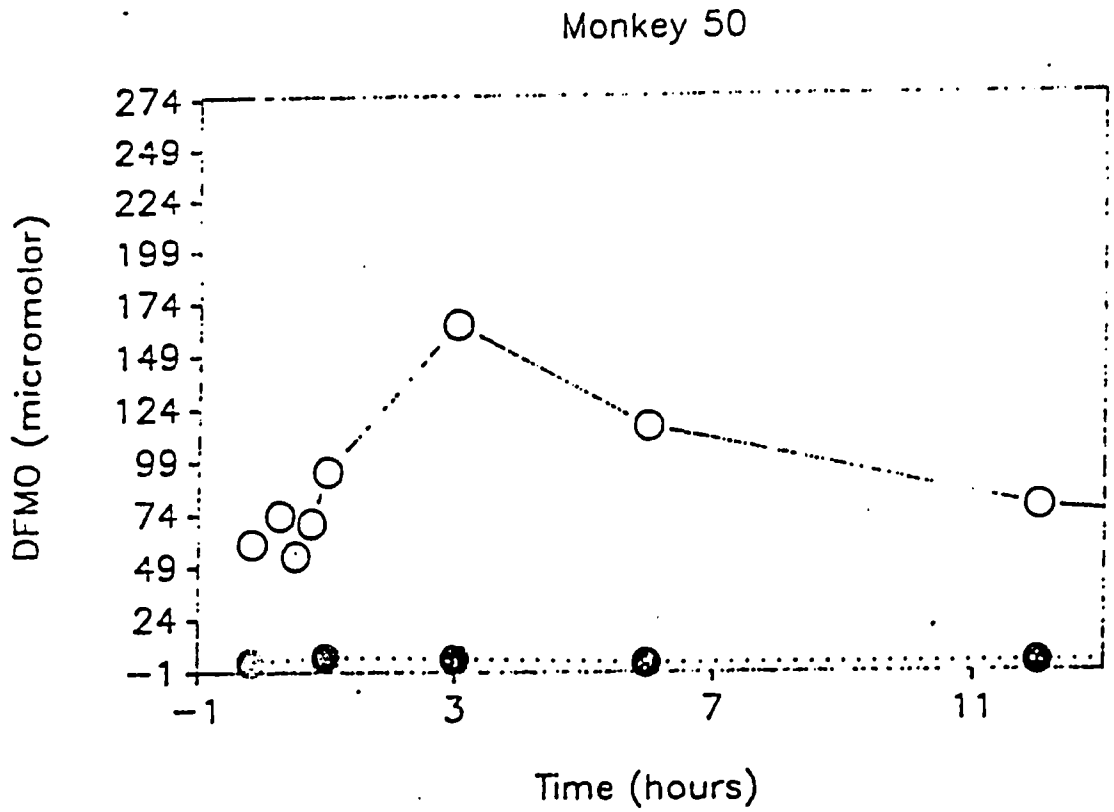
Monkey 50
DFMO (micromolar)
274
249
224
199
174
149
124
99
74
49
24
−1
−1
3
7
11
Time (hours)

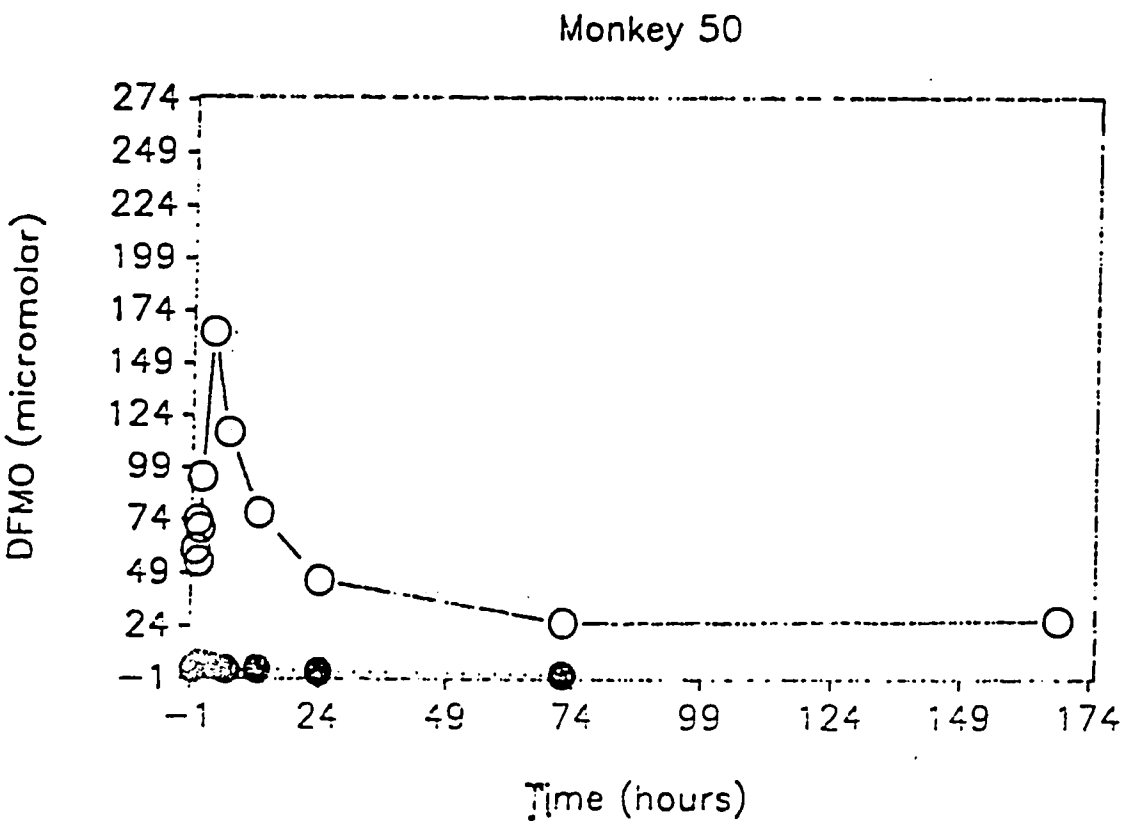
Monkey 50
DFMO (micromolar)
274
249
224
199
174
149
124
99
74
49
24
−1
−1
24
49
74
99
124
149
174
Time (hours)

Differential Sensitivity to DL-α-Difluoromethylornithine in Clinical Isolates of *Trypanosoma brucei rhodesiense*

CYRUS J. BACCHI,[1*] HENRY C. NATHAN,[1] TRACY LIVINGSTON,[1] GLENN VALLADARES[1], PETER P. McCANN,[2] ALAN J. BITONTI,[2] ALBERT SJOERDSMA,[2] MUHAMED SARIC,[3] PAUL D. SAYER,[4] ADRIEL R. NJOGU,[4] AND ALLEN B. CLARKSON, JR.[3]

Haskins Laboratories and Department of Biology, Pace University, New York, New York 10038,[1] Merrell-Dow Research Institute, Cincinnati, Ohio 45215,[2] Department of Medical and Molecular Parasitology, New York University Medical Center, New York, New York 10010[3] and Kenya Trypanosomiasis Research Institute, Muguga, Kenya,[4]

Running title: "DFMO sensitivity in African trypanosomes"

*Corresponding author: telephone (212) 346-1246.

51

ABSTRACT

DL-α-difluoromethylornithine (DFMO) is an enzyme activated inhibitor of ornithine decarboxylase and an antagonist of polyamine metabolism which has been successful in clinical trials against West African sleeping sickness. Its potential for use against the more virulent East African form of the disease, caused by Trypanosoma b. rhodesiense, is not certain. We examined 14 clinical isolates from East Africa (Kenya Trypanosomiasis Research Institute) + 2 established isolates, for susceptibility to DFMO and other standard trypanocides. Seven of 16 strains were partially or totally refractory to DFMO in our test system. Four strains were also refractory to arsenicals, while 5 were refractory to diamidines. The results indicate that other novel agents or combinations of established agents may be needed for effective chemotherapy of East African disease.

Protozoa of the genus Trypanosoma cause debilitating diseases in humans and animals in Africa. One of the most virulent species is Trypanosoma brucei rhodesiense which causes a fatal wasting disease (N'gana) in domestic animals, and sleeping sickness in humans. T. b. rhodesiense is endemic throughout Central and East Africa. A second species, Trypanosoma brucei gambiense, causes West African sleeping sickness in humans and, although this is invariably fatal if not treated, it is a more slowly progressing disease than that caused by T. b. rhodesiense.

Drugs available for treatment of both of the African human trypanosomiases have not changed in over 40 years (WHO, 1987). Suramin and, more rarely, pentamidine are used during the early non-encephalitic stages of the disease. The arsenical melarsoprol (Arsobal^{R}) has been the only agent available for late-stage, central nervous system involvement. Chemotherapy is complicated by the need for i.v. administration of suramin and melarsoprol, by a reactive encephalopathy in 1% to 5% of melarsoprol-treated cases, and by the inability of suramin or pentamidine to cure late stage disease (26, 29).

Recently the ornithine decarboxylase inhibitor DL-α-difluoromethylornithine (DFMO; eflornithine; Ornidyl^{R}; see 2) has been found to be highly effective in clinical trials against late stage T. b. gambiense infections in the Ivory Coast, Sudan and Zaire (reviewed in 24). In many instances, patients had failed one or more courses of melarsoprol prior to DFMO treatment. Side effects due to DFMO therapy were mild and transient. This success

gave hope for a similar efficacy with T. b. rhodesiense. However, the utility of DFMO therapy for East African sleeping sickness remains questionable. In limited clinical trials in Kenya, Tanzania and Mozambique, results with DFMO have been inconsistent (29; P. de Raadt, S. von Nieuwenhove, pers. commun.).

Most of the preclinical work with DFMO and African trypanosomiasis utilized laboratory model infections of T. b. brucei, a closely related subspecies which only infects animals. Beyond the few clinical cases noted above, susceptibility of T. b. rhodesiense to DFMO is limited to three studies with established laboratory strains which indicated that T. b. rhodesiense was less susceptible than T. b. brucei (10, 11, 22). We have, therefore, examined the susceptibility of a battery of T. b. rhodesiense clinical isolates to DFMO and to standard trypanocides. The intention was to provide an estimate of the range of drug susceptibility that will be found in more extensive clinical trials and to provide a panel of isolates to be used for evaluation of new therapies prior to clinical trials. In particular, these results should be useful as a guide for the clinical trials planned for DFMO in the near future (21). All but two of the T. b. rhodesiense isolates were obtained directly from the Kenya Trypanosomiasis Research Institute (KETRI) strain bank. They were chosen to obtain a representative geographic distribution in East Africa with intensive sampling from major endemic areas in Uganda (17).

MATERIALS AND METHODS

Animals. Female 20-25 g Swiss-Webster mice were obtained from Royal Hart Animal Laboratories, New Hampton, NY and Ace Animals, Inc., Boyertown, PA.

Trypanosome Strains. *T. b. brucei* strain Lab 110/EATRO was originally obtained from Dr. W. Trager of the Rockefeller University and has been maintained at Pace University and New York University for many years. This strain has mistakenly been labeled "EATRO 110" in previous publications by us and others. *T. b. rhodesiense* EATRO 105 (ATCC 30119) and *T. b. rhodesiense* Wellcome CT (ATCC 30027) strains were obtained from the American Type Culture Collection, Rockville, MD. The remaining *T. b. rhodesiense* isolates were obtained as frozen stabilates from the KETRI strain bank at Muguga, Kenya which was evolved from the East African Trypanosomiasis Research Organization (EATRO) strain bank. All stabilates were isolated from human blood or cerebrospinal fluid and had at least one laboratory passage in mice. Upon arrival in New York, the stabilates from KETRI were passaged once in rats and additional stabilates were prepared (7).

Drug Experiments. Groups of 50 mice were infected with 2.5 x 10^5 trypanosomes taken from the first parasitemia peak of rats inoculated with frozen stabilate. The infection was allowed to incubate for 24 h. before treatment was begun. Mice were separated into groups of 5 including a group of 5 inoculated but untreated control animals for each experiment. DFMO was administered in the drinking water continuously over the time

indicated. All other drugs were given once daily. Melarsoprol as the commercially available propylene glycol preparation, Arsobal[R] (Rhone-Poulenc, Paris) was injected i.v. in tail veins. All other drugs were given by i.p. injection.

Mice were monitored daily for deaths and weekly for parasites in films of tail vein blood. Animals were considered cured if they survived more than 30 days beyond the average day of death of untreated controls with no evidence of parasites in tail vein blood smears. In most instances animals were held more than 100 days beyond control deaths. Results are expressed as Average Survival in Days (ASD) and as number cured/total.

Drugs. Arsobal[R] and melarsen oxide (Rhone-Poulenc, Paris), and Berenil (diminazene aceturate) and pentamidine (May & Baker, Ltd., Dagenham), were gifts from the manufacturers. Suramin was purchased from Mobay Chemical Co. (New York).

RESULTS

Growth of strains. All strains produced infections invariably fatal in mice. Survival times ranged from 4.2 days (KETRI 2772) to 51.8 days (KETRI 1765). Most strains produced several peaks of parasitemia before killing the host, but some, KETRI 2285, 2482, 2562, 2772, produced a fulminant infection which resulted in a single parasitemia peak and rapid death of the host.

DFMO resistance. Because none of the 16 isolates tested had been previously exposed to DFMO, the refractoriness observed is constitutive. The sensitivity of the isolates to DFMO was judged

by comparison to the sensitive T. b. brucei Lab 110/EATRO isolate (Table 2). DFMO produced a greater than 80% cure rate with T. b. brucei Lab 110/EATRO when administered as a 2% solution in drinking water for 3 days [drug dose = 5.3 g/kg/day, (3)]; at prolonged doses of 2% for 6 or 9 days DFMO invariably cured T. b. brucei Lab 110/EATRO.

Five T. b. rhodesiense strains were similar in sensitivity to T. b. brucei Lab 110/EATRO in that 2% DFMO given for 3, 6 or 9 days cured more than 50% of the treated mice. These were KETRI 1765, 2708, 2482, 2562 and 2772. KETRI 1765 killed untreated controls an average of 52 days post inoculation and, although data involving this strain are limited, they point to an overall sensitivity to the drug equal to the reference sensitive strain T. b. brucei Lab 110/EATRO. Several strains were somewhat more resistant than the T. b. brucei Lab 110/EATRO isolate and were characterized as moderately refractory. These were KETRI 2545, 2636, Wellcome CT, and EATRO 105 for which regimens employing 2% DFMO for 3, 6 or 9 days did not provide a greater than 50% cure rate, but dose regimens using 4% DFMO for 6 and 9 days were curative. Seven strains - KETRI 243, 265, 269, 1992, 2002, 2285, 2538 - appeared highly refractory to DFMO. Three of these strains - KETRI 265, 269, 2538 - had little or no sensitivity to 2% or 4% DFMO with any regimen. For animals infected with these strains, the average survival time beyond that of the controls was less than 30 days even after 6 or 9 day therapy with 4% DFMO. KETRI

strains 243, 1992 and 2002 responded with cures only at a dose level of 4% DFMO for 9 days.

Resistance to standard trypanocides. There are few studies comparing the drug sensitivity of T. b. rhodesiense clinical isolates and since resistance to standard trypanocides remains one of the major obstacles to chemotherapy, we felt it was important to assess these strains for sensitivity to standard drugs. KETRI strains 243 and 2538 originated from patients who had failed 2-4 courses of Arsobal^{R} therapy and therefore these can be regarded as resistant isolates. The remaining KETRI strains were isolated from patients prior to chemotherapy. We have no history of the clinical response of the patients from whom EATRO 105 and the Wellcome CT isolates were isolated.

Sensitivities of the strains to standard trypanocides are shown in Table 3. Resistance to the diamidines Berenil and pentamidine was apparent in 3 strains: KETRI 243, 1992 and 2538. Only one strain, KETRI 269, was resistant to pentamidine but not Berenil, indicating that a general cross resistance to diamidines is commonly encountered as has been demonstrated in the diamidine transport studies of Damper and Patton (9). Some degree of resistance to arsenicals was found in 4 strains, 243, 1992, 2708, and 2538. Of these, 243 and 2708 were clearly resistant to both melarsen oxide and melarsoprol, while 2538 was sensitive to 5 and 10 mg/kg melarsen oxide but refractory to melarsoprol at 5 and 10 mg/kg. KETRI 1992 was sensitive to melarsen oxide but partially

refractory to melarsoprol since only a 40% cure rate was obtained with the higher dose levels of melarsoprol.

All strains were sensitive to suramin at 5 mg/kg with the exception of KETRI 243 for which only 40% of suramin-treated mice were cured (Table 3). Since suramin does not cross the blood-brain barrier, the almost universal efficacy of suramin indicates that these strains did not establish infections in the brain or other areas inaccessible to the drug within the 24 h. incubation period prior to drug treatment (19-20).

DISCUSSION

Resistance to trypanocides, constitutive and perhaps acquired, has been a constant problem for the treatment of human and animal trypanosomiases (12, 18, 25-27). This makes the examination of drug resistance important and it also makes the selection of those parasite strains used for evaluation of new drugs important. Key issues that appear to be involved in the response of a particular parasite isolate to a particular drug are: a) number of prior syringe passages, since repeated passage is associated with increasing virulence; b) prior selection of resistant organisms by exposure to drug in vivo before the original samples were collected; c) the variable time different isolates require to establish infection in sites not accessible to the test drugs; d) variable innate biochemical resistance to the drug; e) the degree to which the parasites of a given isolate are able to evade the host immune response since this will effect

the usual synergism between a chemotherapeutic agent and the immune response (12, 28).

We attempted to minimize some of these variables in this study by beginning treatment 24 h post infection, by using outbred Swiss-Webster mice throughout and by using inocula no more than two syringe passages removed from the original strain bank isolate. Variable a) was minimized for 10 of 14 KETRI isolates which were used within 10 passages of the original host (Table 1). The efficacy of suramin in treating all infections except KETRI 243 indicates that we have been successful in controlling variables c) and e) thus allowing us to examine the interaction of the test drugs and the parasites as independently as possible of the peculiarities in the experimental host/parasite pair.

Making the assumption that the model we used does directly examine drug/parasite interaction the relative resistance of KETRI 243 to suramin is interesting since suramin resistance is not common in clinical isolates (26). For melarsen oxide we have additional evidence that the resistance of KETRI 243 reflects the ability of the organism to survive exposure to the drug and not the avoidance of contact with drug in the experimental host. In a preliminary study, purified bloodstream KETRI 243 (5×10^7/ml) suspended in fetal bovine serum withstood incubation in melarsen oxide at 100 uM without evidence of lysis for 30 min; the melarsen oxide-sensitive <u>T. b. brucei</u> Lab 110/EATRO was more than 80% lysed in 15 min by 7.5 uM (N. Yarlett, B. Goldberg,

C.J. Bacchi, unpubl.). A previous report indicated that lysis of trypanosomes in the presence of melarsoprol is dose-dependent if done in the presence of normal serum or buffer containing physiological Ca^{++} levels (8).

Resistance to the diamidines pentamidine and/or Berenil appeared in 4 of the 16 strains studied. Since pentamidine is one of the agents used in early stage East African sleeping sickness the occurrence of resistance in 25% of the tested isolates is particularly discouraging, and agrees with similar findings in the field (16, 26) and the laboratory (30).

In these studies the variation in sensitivity to DFMO may be due to the degree of immune competency of the mouse strain, or to biochemical differences within the polyamine metabolism of the strains. Although the same strain of mouse was used for all the experiments described herein, further testing in other strains of mice will be done to determine whether antibody responses contributed significantly to the outcome of the present experiments since these are known to differ in mouse strains (11) and are important in the outcome of DFMO treatment (6, 11). DFMO treatment and thus polyamine deprivation has many biochemical effects on cells. It rapidly inhibits DNA, RNA and protein synthesis while decreasing multiplication in blood and tissues (1, 5). Blockage of cell division likely blocks antigenic variation so that the parasites are ultimately destroyed by the host's immune system (6, 11). Greater than 50 fold DFMO resistance was experimentally induced in cultured procyclic

trypanosomes (analogous to vector midgut forms) by serial passage *in vitro* in increasing drug concentrations (4, 23). Resistance induced in one strain was attributed to decreased DFMO uptake (23). Resistance induced in the other strain was not associated with altered drug uptake but with the ability to maintain in the presence of DFMO a normal concentration of trypanothione, a spermidine containing redox intermediate unique to kinetoplastids Wild-type cells exposed to DFMO have a reduced trypanothione concentration as would be expected if spermidine biosynthesis is blocked by DFMO (4, 14). The latter resistant strain had elevated ornithine levels which would allow ornithine to compete with the inhibitor, an analogue of ornithine for the active site of ODC. This would protect ODC and thus maintain polyamine biosynthesis in the presence of the drug (4).

In contrast to the studies of induced DFMO resistance in the vector stages, the present study focused on the clinically relevant infective stage of wild-type uncloned isolates having no prior exposure to DFMO. The reason(s) for the observed variable sensitivities are not yet known but may in part reflect naturally occurring variations in polyamine metabolism. It is intriguing that several strains resistant to DFMO are also resistant to arsenicals since the trypanothione/As complex formation is responsible for the action of melarsoprol by reducing redox protection of the trypanosome (13, 15). A natural excess production of spermidine coupled with trypanothione over-production might compensate for the loss of trypanothione and

confer resistance to As and to DFMO. Further studies with these strains will involve examination of the mechanism(s) for DFMO and As-resistance and the development of new therapies based on rational combinations of clinically active agents.

ACKNOWLEDGEMENTS

This work was funded by NIH AI17340, by the UNDP/World Bank/WHO Special Programme for Research and Training in Tropical Diseases (89-0064), USAID grant 86-G6047 and DOD Contract DAMD17-87-C-7177. The authors gratefully acknowledge gifts of Arsobal[R] and melarsen oxide (Rhone-Poulenc, Paris), and Berenil and pentamidine (May and Baker Ltd., Dagenham).

LITERATURE CITED

1. Bacchi, C.J., J. Garofalo, D. Mockenhaupt, P.P. McCann, K. Diekema, A.E. Pegg, H.C. Nathan, E.A. Mullaney, L. Chunosoff, A. Sjoerdsma and S.H. Hutner. 1983. In vivo effects of DL-α-difluoromethylornithine on the metabolism and morphology of Trypanosoma brucei brucei. Mol. Biochem. Parasitol. 7:209-225.

2. Bacchi, C.J. and P.P. McCann. 1987. Parasite protozoa and polyamines, p. 317-344. In P.P. McCann, A.E. Pegg, A. Sjoerdsma (ed), Inhibition of polyamine metabolism. Academic Press, New York.

3. Bacchi, C.J., H.C. Nathan, A.B. Clarkson, Jr., E.J. Bienen, A.J. Bitonti, P.P. McCann, and A. Sjoerdsma. 1987. Effects of the ornithine decarboxylase inhibitors DL-α-difluoromethylornithine and α-monofluoromethyldehydroornithine methylester alone and in combination with suramin against Trypanosoma brucei brucei central nervous system models. Am. J. Trop. Med. Hyg. 36:46-52.

4. Bellofatto, V., A.H. Fairlamb, G.B. Henderson, and G.A.M. Cross. 1987. Biochemical changes associated with α-difluoromethylornithine uptake and resistance in Trypanosoma brucei. Mol. Biochem. Parasitol. 25:227-238.

5. Bitonti, A.J., D.E. Cross-Doersen, and P.P. McCann. 1988. Effect of α-difluoromethylornithine on protein synthesis and synthesis of variant-specific glycoprotein (VSG) in Trypanosoma brucei brucei. Biochem. J. 250:295-298.

6. Bitonti, A.J., P.P. McCann, and A. Sjoerdsma. 1986. Necessity of antibody response with treatment of African trypanosomiasis with α-difluoromethylornithine. Biochem. Pharmacol. 35:331-334.

7. Brohn, F.H., and A.B. Clarkson, Jr. 1978. Quantitative effects of salicylhydroxamic acid and glycerol on Trypanosoma brucei glycolysis in vitro and in vivo. Acta Tropica 35:23-33.

8. Clarkson, A.B., Jr., and B.O. Amole. 1982. Role of calcium in trypanocidal action. Science 216 1321-1323.

9. Damper, D., and C.L. Patton. 1976. Pentamidine transport and sensitivity group trypanosomes. J. Protozool. 23:341-356.

10. deGee, A.L.W., P.H.B. Carstens, P.P. McCann and J.M. Mansfield. 1984. Morphological changes in Trypanosoma brucei rhodesiense following inhbition of polyamine biosynthesis in vivo. Tissue and Cell 16:731-738.

11. deGee, A.L.W., P.P. McCann, and J.M. Mansfield. 1983. Role of antibody in the elimination of trypanosomes after DL-α-difluoromethylornithine chemotherapy. J. Parasitol. 69:818-822.

12. Dukes, P. 1984. Arsenic and old taxa: subspeciation and drug sensitivity in Trypanosoma brucei. Trans. Roy. Soc. Trop. Med. Hyg. 78:711-725.

13. Fairlamb, A.H. 1989. Metabolism and functions of trypanothione with special reference to leishmaniasis. p.465-473. In D.T. Hart (ed.) Leishmaniasis: the current status and new strategies for control. NATO and ASI Symposium Vol. 163. Plenum Press, New York (in press).

14. Fairlamb, A.H., G.B. Henderson, C.J. Bacchi, and A. Cerami. 1987. In vivo effects of difluoromethylornithine on trypanothione and polyamine levels in bloodstream forms of Trypanosoma brucei. Mol. Biochem. Parasitol. 24:185-191.

15. Fairlamb, A.H., G.B. Henderson, and A. Cerami. 1989. Trypanothione is the primary target for arsenical drugs against African trypanosomes. Proc. Natl. Acad. Sci (USA) 86:2607-2611.

16. Finelle, F. 1977. Revue de la situation de la trypanosomiase animale. pp. 118-128. In: International scientific council for Trypanosomiasis Research and Control, 15th Meeting Eleza Services, Nairobi.

17. Gibson, W.C. and J.K. Gashumba. 1983. Isoenzyme characterization of some Trypanozoon stocks from a recent trypanosomiasis epidemic in Uganda. Trans. Roy. Soc. Trop. Med. Hyg. 77:114-118.

18. Gill, B.S. 1971. Resistance of Trypanosoma evansi to quinapyramine, suramin, stilbamidine and analysis of cross-resistance. Trans. Roy. Soc. Trop. Med. Hyg. 65:352-357.

19. Jennings, F.W., D.D. Whitelaw, P.H. Holmes, H.G.B. Chizyaka, and G.M. Urquhart. 1979. The brain as a source of relapsing Trypanosoma brucei infection in mice following chemotherapy. Int. J. Parasitol. 9:381-384.

20. Jennings, F.W., D.D. Whitelaw, and G.M. Urquhart. 1977. The relationship between duration of infection with Trypanosoma brucei in mice and efficacy of chemotherapy. Parasitology 75:143-153.

21. Maurice, J. 1989. In the pipeline. African trypanosomiasis. TDR News, No. 27:4 (February).

22. McCann, P.P., C.J. Bacchi, W.L. Hanson, G.D. Cain, H.C. Nathan, S.H. Hutner, and A. Sjoerdsma. 1981. Effect on parasitic protozoa of α-difluoromethylornithine - an inhibitor of ornithine decarboxylase, p. 97-110. In C.M. Caldarera, V. Zappia and U. Bachrach (ed.), Advances in Polyamine Research, vol. 3. Raven Press, New York.

23. Philips, M.A., and C.C. Wang. 1987. A Trypanosoma brucei mutant resistant to α-difluoromethylornithine. Mol. Biochem. Parasitol. 22:9-17.

24. Schechter, P.J., J.L.R. Barlow, and A. Sjoerdsma. 1987. Clinical aspects of inhibition of ornithine decarboxylase with emphasis on therapeutic trials of Eflornithine (DFMO) in cancer and protozoan disease, pp. 345-364. In P.P. McCann, A.E. Pegg and A. Sjoerdsma (eds.), Inhibition of Polyamine Metabolism. Academic Press, New York.

25. Schonefeld, A., D. Rottcher, and S.K. Moloo. 1987. The sensitivity to trypanocidal drugs to Trypanosoma vivax isolated in Kenya and Somalia. Trop. Med. Parasit. 38: 117-180.

26. Williamson, J. 1970. Review of chemotherapy and chemoprophylactic agents, p. 125-224. In H.W. Mulligan (ed.), The African trypanosomiases. Allen and Unwin, London.

27. Williamson, J. 1976. Chemotherapy of African trypanosomiasis. Trop. Dis. Bull. 73:531-542.

28. Williamson, J. 1983. Drug sensitivity of pleomorphic Trypanosoma rhodesiense. Trans. Roy. Soc. Trop. Med. Hyg. 77:192-193.

29. World Health Organization. 1987. Tropical Disease Research: A Global Partnership. Eighth Programme Report. World Health Organization, Geneva.

30. Zweygarth, E. and D. Rottcher. 1989. Efficacy of experimental trypanocidal compounds against a multiple drug-resistant Trypanosoma brucei brucei stock in mice. Parasitol. Res. 75:178-182.

TABLE 1. Origin of KETRI *T. b. rhodesiense* stabilates.

KETRI Strain	Passage	Location	Year of Isolation
243	1	Busoga, Uganda	1961
265	7	Numbuzi, Tanzania	1959
269	2	Kitanga, Tanzania	1960
1765	2	Ngamiland, Botswana	1960
1992	1	Buyinja, Uganda	1972
2002	1	Tororo, Uganda	1972
2285	1	Busoga, Uganda	1976
2482	7	Lumino, Uganda	1969
2538	21	Tete Province, Mozambique	1980
2545	4	Lambwe Valley, Kenya	1981
2562	14	Lumino, Uganda	1959
2636	1	Tete Province, Mozambique	1983
2708	8	Busoga, Uganda	1964
2772	1	Alupe, Kenya	1985

Table 2. Sensitivity of T. b. rhodesiense isolates to DFMO.

DFMO	Dose	KETRI Strains 243	265	269	1765	1992	2002	2285	2482	2538	2545	2562	2636	2708	2772	Wellcome CT	EATRO 105	T. brucei LAB 110
0.25%	3X	44.8[a] 0/5	--	--	--	--	--	--	--	--	--	6.0 0/10	12.8 0/5	--	5.2 0/5	--	--	4.0 0/15
0.50%	3X	41 0/5	16 0/5	13.8 0/5	--	--	18.4 0/5	--	10.6 0/10	24.4 0/5	19.6 0/5	15.6 4/15	20.8 0/5	--	10.1 0/10	--	--	8.0 0/15
0.75%	3X	61 0/5	14.6 0/5	13.6 0/5	--	--	21.2 0/5	--	--	16.4 0/5	19.2 0/5	--	17.9 0/5	--		--	--	24.4 1/15
1.0%	3X	61 1/5	14.7 0/10	15 0/5	--	19.4 0/5	24.8 0/5	--	10.8 0/5	13.6 0/5	--	10.2 0/15	25.6 0/5	--	20.6 2/5	--	--	32.0 8/15
2.0%	3X	35 0/10	17 0/5	13.8 0/5	43.6 2/5	17.4 0/5	46.4 1/5	21.6 1/15	18.6 0/5	17.8 0/5	--	27.4 10/15	26 0/5	28.5 1/10	22.5 2/5	9.3 0/10	21 2/10	34.3 14/15
2.0%	6X	74.5 4/10	22.2 0/5	17 0/5	89 2/5	15.6 0/5	29.2 0/5	28.5 2/15	34.9 9/10	25 0/5	31.7 1/10	34.5 14/15	36 1/5	>50 10/10	>35 5/5	21 3/10	27 2/10	>35 15/15
2.0%	9X	58.1 1/10	26.6 0/5	23.2 0/5	88.4 3/5	20.2 0/5	33.4 0/5	30 1/5	>42 5/5	23.6 0/5	33.6 4/5	34.4 14/15	46 3/5	>50 5/5	>35 5/5	26 5/10	19.1 2/10	>35 15/15
4.0%	3X	35.6 0/10	17.8 0/5	13.4 0/5	--	17 0/5	28 0/5	26.5 0/5	--	20.5 0/5	25.4 0/5	29.9 7/10	28 0/5	--	>35 5/5	12.9 1/15	28.1 10/15	>35 15/15
4.0%	6X	35.7 2/10	23.8 0/5	12 0/5	--	18.8 0/5	35 0/5	34.9 4/5	>42 5/5	29 0/5	36.8 7/10	34.3 18/20	46.6 4/5	--	>35 5/5	27 8/10	34.6 9/10	>35 15/15
4.0%	9X	>70 5/5	36.2 2/5	21.6 0/5	--	>41 5/5	>50 5/5	>40 5/5	--	27.6 0/5	>37 5/5	--	>51 5/5	--	--	>35 5/5	>36 5/5	>35 15/15
ontrol		21.1 0/40 (11-55)[b]	13.4 0/5 (10-19)	12.8 0/5 (10-37)	51.8 0/5 (17-70)	11.6 0/10 (6-25)	19.6 0/5 (17-52)	6.6 0/15 (7-20)	7.0 0/20 (7-10)	14.1 0/5 (8-28)	13.0 0/15 (7-19)	4.2 0/30 (4-7)	20.8 0/5 (14-21)	18.9 0/10 (17-21)	4.2 0/15 (4-5)	4.1 0/15 (4-5)	5.5 0/15 (4-7)	4.0 0/15 (4)

[a] Results expressed as average survival in days; number of animals cured/total; for details see Methods.

[b] Range of survival time of controls.

.e 1. Sensitivity of T. b. rhodesiense isolates to standard trypanocides.

	Dose	KETRI Strains														Wellcome CT	EATRO 105	EATRO 110
		241	265	269	1765	1992	2002	2285	2482	2528	2545	2562	2636	2708	772			
:nil mg/kg	3X	28[a] 0/5	>44 5/5	>45 5/5	--	29.5 0/10	>43 5/5	>46 5/5	--	18.3 0/10	--	>35 5/5	43 3/5	--	34 4/5	>35 5/5	>35 5/5	>35 5/5
rsen Oxide mg/kg	3X	36.4 0/5	>44 5/5	33.2 0/5	>82 5/5	22.8 0/5	49.8 1/5	>40 5/5	--	15.6 0/5	>37 5/5	--	>44 5/5	24.4 0/5	--	>35 5/5	32.2 4/5	>35 5/5
mg/kg	3X	39.6 1/10	>44 5/5	58 2/5	>82 5/5	39.8 4/5	>60 5/5	>40 5/5	--	36.4 6/15	>37 5/5	--	>44 5/5	21.0 0/5	--	>35 5/5	>35 5/5	>35 10/10
mg/kg	3X	52.2 1/5	43.4 9/10	>61 5/5	>82 5/5	39.4 4/5	82.8 4/5	>40 5/5	--	46.2 7/10	>37 5/5	--	>44 5/5	25.0 0/5	--	>35 5/5	>35 5/5	>35 5/5
rsoprol mg/kg	3X	20.7 0/5	37.4 4/5	28 2/5	--	13.4 0/5	8.6 0/5	11 1/5	--	12 0/10	31 4/5	32.8 4/5	9.4 0/5	16.8 0/5	31.8 4/5	>35 5/5	>35 5/5	29 7/10
mg/kg	3X	51 1/5	32 3/5	5 0/5	60.6 3/5	25.4 2/5	54.6 3/5	19.6 2/5	--	13.5 0/15	35.8 4/5	--	24.2 2/5	16.8 0/5	--	23.5 2/5	12.4 1/5	>35 10/10
mg/kg	3X	33 0/5	34.4 6/10	--	67.6 2/5	23.6 2/5	>60 5/5	>40 5/5	--	17.7 0/10	>37 5/5	--	40.4 4/5	17.2 0/5	--	--	>35 5/5	27 2/5
min mg/kg	3X	37.6 2/5	>44 5/5	>45 5/5	--	>48 5/5	37 4/5	>46 5/5	>37 5/5	>42 10/10	>45 5/5	>35 5/5	>52 5/5	>50 5/5	>34 5/5	>35 5/5	>35 10/10	>35 10/10
amidine mg/kg	3X	26.4 0/5	37.2 2/5	27.0 0/5	--	17.2 0/10	>43 5/5	>46 5/5	>37 5/5	14.6 0/5	44.6 4/5	>35 5/5	42.2 2/5	--	--	>35 5/5	>35 5/5	>35 5/5
rol		23 0/25 (11-47)[b]	13.4 0/5 (11-15)	23.1 0/10 (14-37)	51.8 0/5 (17-70)	15.2 0/10 (7-25)	21.7 0/10 (8-52)	13.1 0/10 (7-20)	7.0 0/5 (7)	12.3 0/15 (8-22)	12.5 0/15 (7-19)	5.0 0/15 (5)	17.7 0/10 (11-22)	18.9 0/10 (17-21)	4.0 0/5 (4)	4.1 0/20 (3-7)	5.2 0/15 (4-7)	4.0 0/15 (3-6)

[a]Results expressed as average survival in days; number of animals cured/total; for details see Methods.

[b]Range of survival time of controls.

TABLE 4. Drug resistance patterns in *T. b. rhodesiense* strains.

Strain	Drugs			
	Arsenical	Diamidine	Suramin	DFMO
243	+	+	±	+
265	-	-	-	+
269	-	±	-	+
1765	-			-
1992	±	+	-	+
2002	-	-	-	+
2285	-	-	-	+
2538	+	+	-	+
2482		-[b]	-	-
2545	-	-[b]	-	-
2562	-	-	-	-
2636	-	±	-	-
2708	+		-	-
2772	-	-[c]	-	-
Wellcome CT	-	-	-	-
EATRO 105	-	-	-	-

[a] +, drug resistant; - drug susceptible; ±, partial resistance; [b]data for Pentamidine only; [c] data for Berenil only.

POLYAMINES IN THE CHEMOTHERAPY OF AFRICAN TRYPANOSOMIASIS

C.J. Bacchi[1], N. Yarlett[1], H. Nathan[1], B. Goldberg[1], J. Garofalo[1], P.D. Sayer[2], A. Njogu[2] and A.B. Clarkson, Jr[3]

[1]Haskins Laboratories and Biology Department, Pace University, New York, NY 10038; [2]Kenya Trypanosomiasis Research Institute, P.O. Box 362, Muguga, Kenya; [3]Department of Medical and Molecular Parasitology, New York University Medical Center, New York, NY 10016

-13

Polyamines and Their Synthesis. Polyamines are small molecules universally required for growth and division by prokaryotic and eukaryotic cells. The most important polyamines in eukaryotes are putrescine, spermidine and spermine, which are believed to have major roles in cell division, differentiation and the maintenance of essential cell functions (1). The molecular underpinnings of polyamine action are still shrouded, however it is clear that their presence (especially spermidine) is important for conformational regulation of DNA, elongation and initiation of protein synthesis and fidelity of translation. Polyamines appear to be essential for ribosome and tRNA structure and function, and exert dramatic control over proteins such as topoisomerases (2).

Synthesis of polyamines is closely regulated, with the reactions catalyzed by ornithine (ODC: Fig. 1) and S-adenosyl-methionine decarboxylases (SAM DC) emerging as the critical steps. ODC produces putrescine from ornithine while SAM DC synthesizes decarboxylated SAM which is the aminopropyl group donor for spermidine and spermine synthesis. Aminopropyl groups are transferred to putrescine and spermidine by spermidine and spermine synthases, respectively (Fig. 1).

Novel Aspects of Polyamine Synthesis in Trypanosomes. Despite apparent similarities between mammalian and trypanosome polyamine pathways, subtle differences exist. Trypanosomes synthesize putrescine from ornithine via ODC,

and spermidine from methionine and putrescine by way of SAM synthetase, SAM DC and spermidine synthetase (summarized in: 3). The origin of ornithine is unclear since Trypanosoma brucei brucei lacks arginase (J. Garofalo and C.J. Bacchi, unpubl.) a major source of ornithine in mammalian cells. African trypanosomes do not synthesize nor do they contain significant levels of spermine. Many cells avidly transport polyamines but African trypanosomes do not, unless prior depletion of intracellular levels has occurred (4, 5). A key aspect of trypanosome polyamine metabolism is the presence of a unique spermidine containing peptide, trypanothione [N^1,N^8bis (glutathionyl)spermidine], which serves as cofactor for glutathione reduction and hence is essential in protecting trypanosomes from free radical damage and other oxidant stress (6).

Inhibition of polyamine Synthesis: Relationship to Chemotherapy. DL-α-difluoromethylornithine (DFMO; Eflornithine) is an enzyme-activated inhibitor of ODC which was developed by the Merrell Dow Research Institute in the late 1970s. It is highly specific for ODC and exerts a time dependent irreversible inhibition of the enzyme, becoming covalently bonded to the active site (7).

In bloodstream trypanosomes, DFMO rapidly blocks ODC activity, reduces polyamine content, blocks DNA, RNA and protein synthesis while causing alterations in morphology of LS forms, producing cells similar to intermediate and stumpy forms (3, 8). Despite the broad reaching biochemical

75

consequences of DFMO treatment, the drug is not overtly cytotoxic.

In model T. b. brucei acute mouse infections, DFMO cures if a 2% solution is administered continuously for 3 days [total dose: 5.3 g/kg/day (9)]. Prolonged administration of DFMO (4% for 4 weeks) is curative in model CNS infections (9), but the total dose can be reduced significantly if combined with suramin (10).

Because of the extensive clinical experience with DFMO as an antitumor agent, clinical trials with gambian sleeping sickness were begun in 1981. DFMO proved to be largely successful with >90% of the now more than 400 patients responding to the drug as defined by clearance of trypanosomes from blood and CSF, and a low incidence of relapse (11). Most patients had failed one or more courses of treatment with Mel B, and most had CNS disease at the time treatment was begun. DFMO has recently been administered i.v. for 2 weeks (400 mg/kg/day total dose) followed by 300 mg/kg/day per os (4 x 75 mg/kg/day) for 4 additional weeks. This regimen has proven superior to previous oral dosing protocols with side effects being largely minor and disappearing on cessation of drug administration. These studies are detailed in several reviews (11, 12, 13).

Despite the outstanding success of DFMO against disease caused by T. b. gambiense, the outlook for its use in treatment of East African sleeping sickness (caused by

T. b. rhodesiense) is uncertain. In a limited number of trials in East Africa, various DFMO regimens, even those employing double the standard dose, have failed to cure some patients (S. van Nieuwenhove, P. deRaadt, pers. commun.). It is becoming apparent from these initial studies that alternatives to single drug therapy with DFMO will be needed for East African disease.

Specificity of DFMO - Reason for Efficacy. The surprising activity of DFMO for African trypanosomes has been the subject of considerable study. To summarize the findings thus far, DFMO efficacy centers on several key considerations:

1. DFMO blocks antigenic variation, and a competent immune system is required to rid the parasite from the host (14, 15).

2. In contrast to the mammalian host, in which ODC half life ($t_{1/2}$) is less than 1 h (1), *T. b. brucei* blood and midgut forms have ODC which has a long (>2 h) $t_{1/2}$ (16, 17). The main structural difference between host and parasite ODC is the lack of a 36 amino acid sequence ("PEST" sequence) on the C-terminal end of the parasite ODC, which is one factor associated with a high turnover rate in the mammalian enzyme (16). The low turnover rate of the parasite ODC implies a low synthesis rate and this allows more efficient reduction of enzyme activity by DFMO for a longer time (17).

3. The spermidine-containing tripeptide trypanothione is unique to trypanosomatids (18). It is the only substrate

for trypanothione reductase and, in the reduced state it functions to non-enzymatically reduce glutathione and maintain the redox balance of the cell. These reactions are detailed elsewhere in this volume (Fairlamb). DFMO treatment not only reduces spermidine content, but also levels of trypanothione and its intermediate, glutathionyl-spermidine (19). The resulting stress on the capacity to detoxify free radicals should enhance parasite sensitivity to agents which produce free radicals, such as nifurtimox (6).

4. African trypanosomes lack a reservoir of spermine, and appear to not synthesize it. They also lack the oxidative pathway necessary to convert spermine to spermidine (J. Garofalo and C. Bacchi, unpubl.). The persistence of spermine in DFMO-treated mammalian cells and its catalytic conversion to spermidine (20) may be one reason why DFMO has been largely ineffective as an antitumor agent when used in single drug therapy (13). As noted, uptake of exogenous polyamines in T. b. brucei occurs at a much reduced rate in comparison to mammalian cells (5). Although DFMO treatment enhances polyamine transport, these factors collectively signal the inability of trypanosomes to sequester physiologically significant amounts of exogenous polyamines.

Recent Studies on the Susceptibility of Trypanosoma b. rhodesiense to DFMO and Arsenicals. In view of recent clinical trials in East Africa with DFMO, we have examined 14 clinical isolates (Uganda, Kenya and Mozambique) from the

Kenya Trypanosomiasis Research Institute (KETRI) strain bank for susceptibility to trypanocides, using these strains as acute laboratory model infections (Bacchi et al, submitted). To summarize this work, 7 isolates (50%) were moderately to highly refractory to DFMO in comparison to the standard test strain T. b. brucei Lab 110/EATRO. Four of 14 isolates (21.4%) were moderately to highly refractory to melarsen oxide and melarsoprol (Mel B). The levels of resistance varied >8 fold in some DFMO-refractory isolates and >3 fold for the arsenicals. Since these strains had no prior contact with DFMO, the resistance attributed to DFMO is constituitive; 2 of the 4 arsenic resistant strains were isolated from patients who had failed Mel B treatment. All the strains, with the possible exception of one, were susceptible to suramin, indicating that drug inefficacy was not due to sequestering of parasites in the CNS or other tissue inaccessible to the drug.

Resistance to DFMO. Studies have begun to assess potential differences in polyamine metabolism between DFMO-sensitive and resistant strains. ODC activity in sensitive and resistant strains was found to be similar with specific activities of 40-60 nmoles CO_2/mg protein/h. Time-dependent K_i values for DFMO (21) were similar in both DFMO-sensitive T. b. brucei EATRO 110 and in DFMO-refractory T. b. rhodesiense isolates (25-50 uM) indicating that differences in the ODC active site are probably not responsible for the lack of response to DFMO.

-A

Uptake of DFMO was similar in 2 sensitive and 2 refractory strains, in the range of 600 p moles/mg protein/h when bloodstream trypomastigotes were incubated in vitro with [^{3}H]DFMO as in Bitonti et al (22). However, one refractory strain did exhibit a reduction of 60% in DFMO uptake. Another potenital mechanism accounting for resistance to DFMO may be the significantly increased accumulation of polyamines in blood forms of 2 refractory isolates upon incubation in vitro with radiolabeled polyamines. Thus far, 2 of 7 DFMO refractory isolates were found to accumulate polyamines at rates up to 4 times that of sensitive cells. These studies are preliminary and full details will be forthcoming in subsequent publications.

Resistance to Arsenicals. As noted, 4 KETRI strains were refractory to melarsen oxide and Mel B. We began studies comparing sensitive and resistant strains in a trypanosome lysis assay based on that developed by Clarkson & Amole (23): blood forms are incubated in fetal bovine serum with varying concentrations of arsenicals. Drug-sensitive isolates completely lysed within 15 min upon incubation in < 20 uM melarsen oxide while refractory strains withstood 30 min in 100 uM drug without lysing.

Since Fairlamb and coworkers have demonstrated that trypanothione may be a primary target of arsenical drugs in trypanosomes (6, 24), we began examination of total free thiol levels in resistant and susceptible strains using dithionitrobenzene. Refractory strains had a 3-fold increase

in total thiol levels above those measured in sensitive strains (1-2 nmoles/10^8 cells) which would indicate an increased ability to withstand arsenic-induced trypanothione loss and still maintain redox function (24). However, initial analyses of trypanothione, glutathionyl spermidine and glutathione, using HPLC methodology and monobromobimane as fluorescing agent (24), indicated that the levels of these intermediates were similar in As-resistent and -susceptible strains. These findings do not exclude trypanothione as a target for arsenical drugs, but do make important further studies centering on spermidine content and the interconversion of oxidized and reduced trypanothione in As-resistant strains.

Conclusion. In these studies we have begun to examine the basis for resistance to DFMO and arsenicals observed in clinical isolates. Possible mechanisms of resistance to DFMO include reduced uptake of the drug and increased uptake of polyamines. Overproduction of ODC or significant lack of response of the enzyme to DFMO does not appear to be a factor in resistance in these isolates.

Resistance to arsenicals is easily demonstrable by in vivo mouse testing and verification by lysis assay. The reason(s) for resistance is not yet apparent but may be based on the metabolism of trypanothione or the presence of additional thiol targets in these strains.

Acknowledgements. This work was funded by NIH AI17340, the UNDP/World Bank/WHO Special Programme for Research and

Training in Tropical Diseases (89-0064), USAID PSTC 86-G6047, DOD Contract DAMD17-87-C-7177 and a Pace University Scholarly Research Award. The authors gratefully acknowledge gifts of DFMO (eflornithine, Ornidyl[R]: Merrell Dow Research Institute, Cincinnati, Ohio) and Mel B (Arsobal[R]) and melarsen oxide (Rhone-Poulenc, Paris).

References

1. Pegg, A.E. 1986. Biochem. J. 234:249-262.
2. Marton, L.J. and Morris, D.R. 1987. In Inhibition of polyamine metabolism. (P.P. McCann, A.E. Pegg, A. Sjoerdsma, eds), pp 79-106. Academic Press, New York.
3. Bacchi, C.J. and McCann, P.P. 1987. In Inhibition of polyamine metabolism (P.P. McCann, A.E. Pegg, A. Sjoerdsma, eds), pp 317-344. Academic Press, New York.
4. Bacchi, C.J., Vergara, C., Garofalo, J., Lipschik, G.Y. and Hutner, S.H. 1979. J. Protozool. 26:484-488.
5. Bacchi, C.J., Garofalo, J., Mockenhaupt, D., McCann, P.P., Diekema, K., Pegg, A.E., Nathan, H.C., Mullaney, E.A., Chunosoff, L., Sjoerdsma, A. and Hutner, S.H. 1983. Mol. Biochem. Parasitol. 7:209-225.
6. Fairlamb, A.H. 1989. In Leishmaniasis: the current status and new strategies for control. (D.T. Hart, ed), pp 465-473. Plenum Press, New York.
7. Bey, P., Danzin, C. and Jung,M. 1987. In Inhibition of polyamine metabolism. (P.P. McCann, A.E. Pegg, and A. Sjoerdsma, eds), pp 1-31. Academic Press, New York.

8. Giffin, B.F. and McCann, P.P. 1989. Am. J. Trop. Med. Hyg. 40:487-493.

9. Bacchi, C.J., Nathan, H.C., Clarkson, A.B. Jr., Bienen, E.J., Bitonti, A.J., McCann, P.P. and Sjoerdsma, A. 1987. Am. J. Trop. Med. Hyg. 36:46-52.

10. Clarkson, A.B., Jr., Bienen, E.J., Bacchi, C.J., McCann, P.P., Hutner, S.H. and Sjoerdsma, A. 1984. Am. J. Trop. Med. Hyg. 33:1073-1077.

11. Schechter, P.J. and Sjoerdsma, A. 1989. In Enzymes as targets for drug design (M.G. Palfreyman, P.P. McCann, W. Lovenberg, J.G. Temple, Jr., and A. Sjoerdsma, eds.). Academic Press, San Diego (in press)

12. Sjoerdsma, A., Golden, J.A., Schechter, P.J., Barlow, J.L.R. and Santi, D. 1984. Trans. Assoc. Am. Phys. 97:70-79.

13. Schechter, P.J., Barlow, J.L.R. and Sjoerdsma, A. 1987. In Inhibition of polyamine metabolism. (P.P. McCann, A.E. Pegg and A. Sjoerdsma, eds) pp 345-364. Academic Press, New York.

14. deGee, A.L.W., McCann, P.P. and Mansfield, J.M. 1983. J. Parasitol. 69:818-822.

15. Bitonti, A.J., Cross-Doersen, D.E. and McCann, P.P. 1988. Biochem. J. 250:295-298.

16. Phillips, M.A., Coffino, P. and Wang, C.C. 1987. J. Biol. Chem. 262:8721-8727.

17. Bacchi, C.J., Garofalo, J., Santana, A., Hannan, J.C., Bitonti, A.J., and McCann, P.P. 1989. Exp. Parasitol. 68:392-402.

18. Fairlamb, A.H., Blackburn, O., Ulrich, P., Chait, B.T., and Cerami, A. 1985. Science 227:1485-1487.

19. Fairlamb, A., Henderson, G.B., Bacchi, C.J. and Cerami, A. 1987. Mol. Biochem. Parasitol. 24:185-191.

20. Pegg, A.E., Wechter, R.S., Clark, R.S., Wiest, L. and Erwin, B. 1986. Biochemistry 25:379-384.

21. Bitonti, A.J., Bacchi, C.J., McCann, P.P. and Sjoerdsma, A. 1985. Biochem. Pharmacol. 34:1773-1777.

22. Bitonti, A.J., Bacchi, C.J., McCann, P.P., and Sjoerdsma, A. 1986. Biochem. Pharmacol. 35:351-354.

23. Clarkson, A.B., Jr., and Amole, B.O. 1982. Science 216:1321-1323.

24. Fairlamb, A.H., Henderson, G.B. and Cerami, A. 1989. Proc. Natl. Acad. Sci. (USA) 86:2607-2611.

Figure 1. Polyamine biosynthesis and related reactions in African trypanosomes. Boxes indicate inhibitors. Abbreviations: DFMO, DL-α-difluoromethylornithine; SAM, S-adenosylmethionine; SAMDC, SAM decarboxylase; SPD, spermidine; GSH, reduced glutathione; As, arsenical drug; MGBG, methylglyoxal bis(guanylhydrazone); ODC, ornithine decarboxylase; GSH-SPD-GSH, trypanothione.

Polyamine Synthesis in Trypanosomes

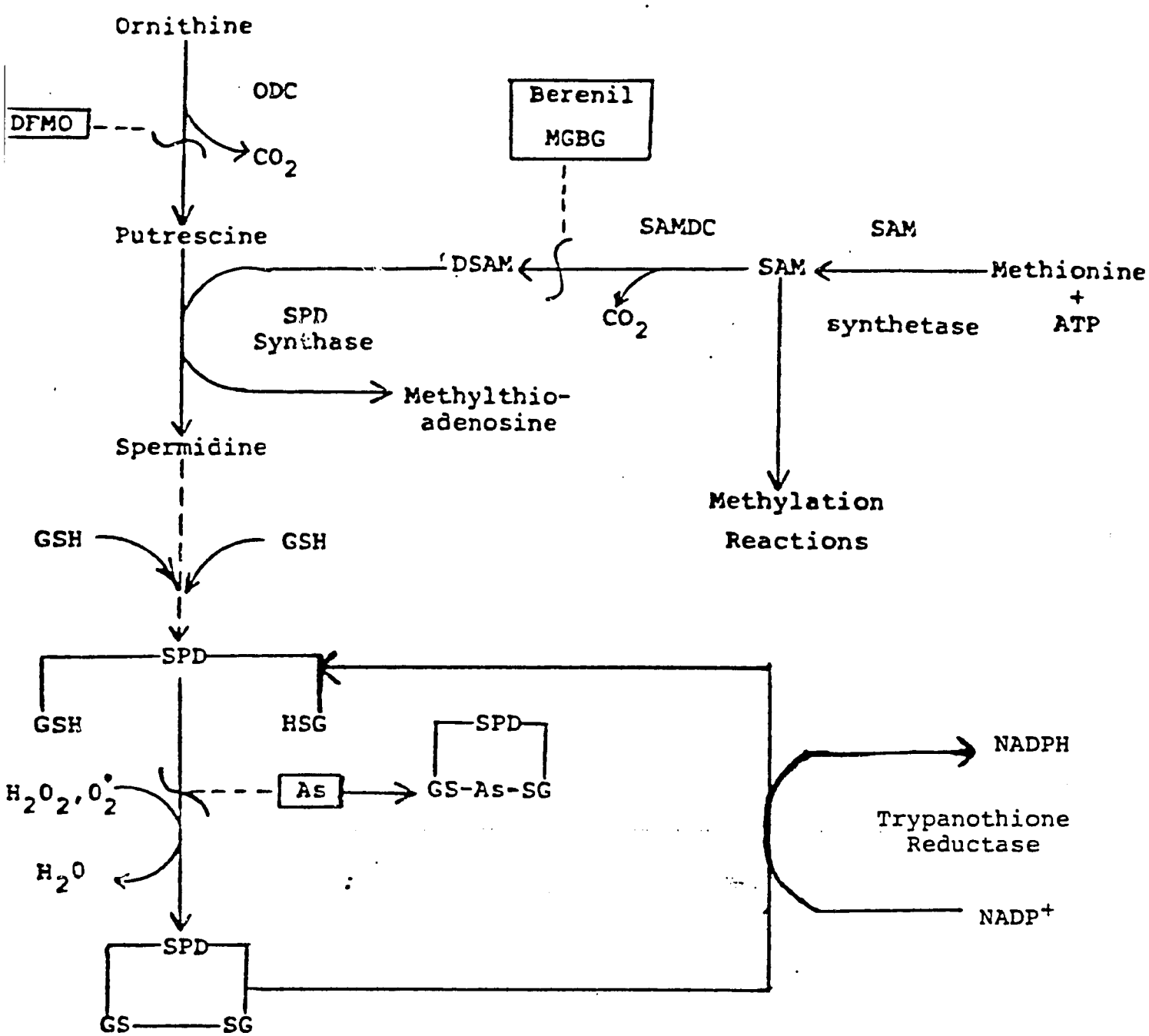

CURRICULUM VITAE

ADRIEL RAYMOND NJOGU

JANAUARY, 1988

DATE OF BIRTH	:	21st May, 1938
PRESENT ADDRESS	:	KETRI, P.O. BOX 362, KIKUYU. Kenya.
MARITAL STATUS	:	Married, four children aged 8, 15, 17, 19
PLACE OF BIRTH	:	Meru, Kenya
CITIZENSHIP	:	KENYAN

EDUCATION

INSTITUTION	FIELD OF STUDY	DATE	QUALIFICATICATION
Ithimbari Primary School	Primary Education	1945 - 48	
Kithangari Primary School	Primary Education	1949	Qualified Common Entrance Examination
Mikumbune Primary top	Primary Education	1950	
Kaaga Methodist Intermediate School, Meru, Kenya.	Primary Education	1951 - 52	Kenya African Preliminary Certificate Examination (KAPE)
Kagumo High School, Nyeri, Kenya.	Secondary Education	1953 - 56	Cambridge School Certificate
Makerere University College, Kampala, Uganda	Biology, Physics Chemistry	1957 - 59	Intermediate Certificate
- do -	Zoology, Chemistry	1959 - 62	B.Sc. (Gen. Honours)
University College London	Biochemistry	1962 - 64	M.Sc.
Lovanium, Kinshasa, Zaire	International Atomic Energy Agency Courses on "*Radioisotopes In Biology*"	1966	
East African Trypanosomiasis Research Organization/ London University	Biochemistry/ Immunochemistry	1965 - 69	Ph.D.

EMPLOYMENT

PLACE AND EMPLOYER	DESCRIPTION OF POSITION	DATE
East African Community		
East African Trypanosomiasis Research Organization, TORORO, Uganda	Research Officer (Trainee)	1962
- do -	Senior Scientific Officer	1965
- do -	Principla Scientific Officer	1969 - 71
- do -	Acting Director	1969
- do -	Director	1971 - 77
Kenya Trypanosomiasis Research Institute (KETRI), Muguga, KIKUYU	Director	1977

TEACHING EXPERIENCE

1973 Part Time Lecturer

Final Year B.Sc. Honours Biochemistry Students, Makerere University, KAMPALA.

1979 Honorary Lecturer, Department of Biochemistry, University of Nairobi.

Supervisor, University of Nairobi M.Sc. and Ph.D. students working at KETRI.

TEACHING INTERESTS

Biochemistry (Protein Chemistry), Immunology, Immunochemistry and Chemistry.

RESEARCH EXPERIENCE AND ASSIGNMENT

1961 Member, Makerere Student Expedition to lake Manyara, Tanzania. Lake Manyara is a saline lake in the East African Rift Valley. The Expedition was to study the changes that occur in flora and fauna with changes from wet to dry conditions and hence from fresh to saline conditions. My work involved mosquito survey and water physicochemical measurements.

1962 Separation of Protein Project

Work done under Dr. R.H. Knight and Dr. W.H.R. Lumsden and involved developing starch-gel electrophoresis technique (then newly introduce in biochemistry) for protein separation in trypanosomes.

1964 Studies on Metabolism of Trypanosome

Work was financed by the British Ministry of Overseas Development and carried out at the national Institute for Medical Research, Mill Hill, London. Work involved the study of alanine-glutamate transminase in Trypanosoma brucei subgroup, under Dr. J. Williamson and Dr. F. Hawking.

1965 - 1969 Trypanosomiasis Biochemistry-Immunochemistry Project

Work involved the equipping of the laboratories and the development of a Biochemistry programme at the East African Trypanosomiasis Research Organisation. Studies were carried out on the enzymology, antigenic nature and structure of trypanosomes.

Thesis towards Ph.D degree - "The nature of some precipitinogens of the brucei subgroup trypanosomes".

1969 Antigen Purification Project

The work involved the purification of the variable surface antigens of Trypanosoma brucei subgroup. These antigens make it difficult to make anti-trypanosomal vaccine. It was carried out at the Molteno Institute, Cambridge, U.K., under Dr. B.A. Newton.

1973 Membrane Freeze Fracture Project

The work was carried out under World Health Organization Scientific Exchange Fellowship. It involved the study of the freeze factured membranes of the surface of trypanosomes. It was carried out under Prof. David Smith in the University of Miami School of Medicine, Miami, Florida, U.S.A.

1971 - 1977 Director of Administration and Scientific Research at the East African Trypanosomiasis Research Organisation. The work involved maintaining the running of the Institute and research programmes under the polical conditions prevailing at the time in Uganda under President Idd Amin Dada.

1977 - Establishment and General direction of Kenya Trypanosomiasis Research Institute. The work involved establishing the just completed ultra-modern laboratory complex and staff housing accommodation, and the development of Research Programmes for the Institute.

LEARNED SOCIETY AND INSTITUTION POSITION

1974 - Founder Member: East African Society of Parasitologists

1975 - 1979 Chairman: International Scientific Council for Trypanosomiasis Research and Control (ISCTRC) of the Organization of African Unity (OAU), Scientific Technical and Research Committee (STRC).

1976 - Member: Expert Review Panel, African Trypanosomiasis, World Health Organisation.

1977 - 1982 Member: Steering committee, Chemotherapy of African Trypanosomiasis, World Bank/UNDP/WHO Special Programme for Research and Training in Tropical Diseases.

1978 - 1980 Member: Task Force on Tsetse and Trypanosomiasis, United States Agency for International Development.

1979 Member: FAO Expert Consultation on Trypanosomiasis, Rome, Italy.

1979 - Member: OAU/ISCTRC Executive Committee.

1982 - 1985 Treasurer: 7th International Congress of Protozoology.

1982 - 1987 Chairman: Steering Committee, Chemotherapy of African Trypanosomiasis, World Bank/UNDP/WHO Special Programme for Research and Training in Tropical Diseases.

1986 - Member: Board of Directors, International Laboratory for Research in Animal Diseases (ILRAD), Nairobi, Kenya.

DATE	MEETINGS, CONFERENCES AND SEMINARS ATTENDED (BY INVITATION)
1972	Conference of Specialists in Trypanosomiasis sponsored by the Rockefeller Foundation at Bellagio, Italy. Paper on "Variable Antigens of brucei trypanosomes".
1973	Member, Ciba Foundation Symposium on "Trypanosomiasis and Leishmaniasis with special reference on Chaga's Disease". Held at Caracas, Venezuela.
1973	Conference on "Parasite Vector relationships with particular reference to the tsetse fly". Organised by the Rockefeller foundaion, at Bellagio, Italy.
1974	FAO Expert Consultation on "Animal Production and Health Research". The conference organised in association with the World Veterinary Association for Animal Production at Copenhagen, Denmark.
1974	Conference of Specialists on "Method for combating Trypanosomiasis through Local, Public and Animal Health Services". Organised jointly by FAO and WHO in Geneva.
1975	Member: Task Force on the Chemotherapy of African Trypanosomiasis. This is a preparative meeting for the formation of the WHO Special Programme for Research and Training in Tropical Diseases. The consultation was organised by WHO in Geneva.
1976	Meeting on "Characterization, Nomeclature and Maintenance of Salivarian Trypanosomes". Organised by the Wellcome Trust and Ministry of Overseas Development in U.K.
1976	Chairman: FAO/WHO Joint Meeting of "Experts on the African Trypanosomiasis" in Rome.

1977 Member: Scientific Working Group, African Trypanosomiasis, World Bank/UNDP/WHO Special Programme for Research and Training in Tropical Diseases. 1st Meeting, Geneva, Switzerland.

1977 1st Meeting of the Scientific Working Group of Africa Trypanosomiasis, organised by World Health Organisation, TDR, Geneva.

1977 Chairman: International Scientific Council for Trypanosomiasis Research and Control (ISCTRC), 15th Meeting, Banjul, Gambia.

1979 Member: Round Table Discussion on African Trypanosomiasis on "International Congress on Chaga's Diseases". Rio de Janeiro.

1979 Member: FAO Expert Consultation on Research on Trypanosomiasis, Rome.

1979 International Scientific Council for Trypanosomiasis Research and Control (ISCTRC), 16th Meeting, Yaounde, Cameroon.

1980-82 Chairman: Scientific Committee, Annual Medical Scientific Conference of Kenya Medical Research Institute and Kenya Trypanosomiasis Research Institute for 1980, 1981 and 1982.

Scientific Workshop, Arusha, Tanzania.

1981 Member: Scientific Working Group, African Trypanosomiasis, World Bank/UNDP/WHO Special Programme for Research and Training in Tropical Diseases. 2nd Meeting, Arusha, Tanzania.

1981 Chairman: Organizing Committee, Annual Medical Scientific Conference of Kenya Medical Research Institute and Kenya Trypanosomiasis Research Institute.

1983 Chairman: Organizing Committee, Annual Medical Scientific Conference of Kenya Medical Research Institute and Kenya Trypanosomiasis Research Institute.

ISCTRC, Lome, Togo.

55th General Assembly, Paris.

Great Meghnschel

ILCA

1988 Member: Scientific Working Group, African Trypanosomiasis, World Bank/UNDP/WHO Special Programme for Research and Training in Tropical Diseases. 3rd Meeting, KETRI, Kenya.

OTHER CONFERENCES AND SEMINARS ATTENDED

1966 4th Symposium of the East African Academy, Kampala, Uganda. One paper read.

-do- International Scientific Council for Trypanosomiasis Research (ISCTR) - 11th Meeting, Nairobi, Kenya. Two papers read.

1971 ISCTR 13th Meeting, Lagos, Nigeria. One paper read.

-91

1974 3rd International Congress of Parasitology, Munich, West Germany. Two papers read.

1975 ISCTRC 14th Meeting, Dakar, Senegal. Two papers read.

1972-75 Annual East African Medical Council Scientific Conferences.

1980-88 Annual Medical Scientific Conferences of Kenya Medical Research Institute and Kenya Trypanosomiasis Research Institute, Nairobi, Kenya.

1981 ISCTRC 17th Meeting, Arusha, Tanzania. Two papers read.

1982 Meeting on "Strategies and recent developments for the control of Trypanosomiasis and East Coast Fever, Nairobi, Kenya.

1985 ISCTRC, 18th Meeting, Harare, Zimbabwe. Four papers read.

1987 ISCTRC 19th Meeting, Lome, Togo.

REFEREES

1. Prof. W.H.R. Lumsden,
16 Merchiston Crescent,
Edinburgh,
Ed. EH 10 5 AX

2. Dr. R. J. Onyango,
P.O. Box 42560,
NAIROBI.
Kenya.

PUBLICATIONS

I. Research Papers

Allsopp, B.A., Njogu, A.R. and Humphreys, K.C. (1971): Nature and location of Trypanosoma brucei subgroup exoantigen and its relationship to 4S antigens. Exp. Parasit., 29, 271-284

Allsopp, B.A., Njogu, A.R. and Humphreys, K.C. (1971): The nature and location of T. brucei subgroup exoantigen and 4S antigen. Abstract. Trans. R. Soc. Trop. Med. Hyg. 65, 251

Allsopp, B.A. and Njogu, A.R. (1974): Monosaccharide composition of the surface glycoprotein antigens of Trypanosoma brucei. Parasitology, 69, 271-281

Balaban, N., Kihagi, H.W., Njogu, A.R. and Golduvan, R. (1988): Isolation and subpellicular microtubular protein from Trypanosomatidae which mediate crossing of microtubules. J. Cell Science. (submitted for publication)

Dunn, W.J., Powers, J., Kaddu, J.B. and Njogu, A.R. (1981): 1-(p-Tolyl)-3-acetyl-3-methyltriazene. A compound with activity against African trypanosomiasis. J. pharm. sciences, 60, No. 72, 1455-6

92

Itazi, O.K.A. and Njogu, A.R. (1973): Preliminary studies on necleotide sugars in T. brucei subgroup extracts.
Abstract. Trans. R. Soc. Trop. Med. Hyg. 67, 262

Njogu, A.R. (1967): Histochemical demonstration of pyridinenucleotide-linked dehydrogenases and diaphorases of T. brucei subgroup trypanosomes after starch-gel electrophoresis.
Abstract. Trans. R. Soc. Trop. Med. Hyg. 61, 136

Njogu, A.R. (1969): The nature of some precipitinogens of the brucei subgroup trypanosomes. Ph.D. Thesis, London University.

Njogu, A.R. (1970): The heterogeneity and inter-relationship of the precipitating antigens of the brucei subgroup trypanosomes.
Abastract. Trans. R. Soc. Trop. Med. Hyg. 64, 169

Njogu, A.R. (1972): Purification of the 4S antigens of brucei subgroup trypanosomes. Abstract. Trans. R. Soc. Trop. Med. Hyg. 66, 347

Njogu, A.R., Dolan, R.B., Wilson, A.J. and Sayer, P.D. (1985): Trypanotolerance in East African Orma Boran Cattle. Vet.Rec. 117, 632-636

Njogu, A.R. and Humphreys K.C. (1967): Electrophoretic Separation of the soluble proteins of brucei subgroup trypanosomes.
Nature, Lond. 216, 280-282

Njogu, A.R. and Humphreys K.C. (1967): Distribution of the soluble dehydrogenases and diaphorases of brucei subgroup trypanosomes in starch-gel electrophorograms. Nature, Lond. 216, 1308

Njogu, A.R. and Humphreys, K.C. (1971): The nature and heterogeneity of the 4S antigens of T. brucei sugroup trypanosomes.
Abstract. Trans. R. Soc. Trop. Med. Hyg., 65, 252

Njogu, A.R. and Humphreys, K.C. (1972): The nature of the 4S antigens of the subgroup trypanosomes. Exp. Parasit. 31, 178-187

Njogu, A.R., Itazi, O.K., Enyaru, J.C. and Abonga, L. (1974): Direct Evidence that the 4S (surface) antigens are located on the outer surface of the Trypanosoma brucei subgroup cell membrane.
Abstract. Trans. R. Soc. Trop. Med. Hyg. 63

Njogu, A.R. and Kinoti, G. (1971): Observation on the breeding sites of mosquitoes in Lake Manyara, a saline lake in the East African Rift Valley. Bull. Ent. Res., 60, 473

Njogu, A.R. and Nguli, K.N. (1971): Preliminary report on sugar compostion of T. brucei subgroup trypanosomes.
Abstract. Trans. R. Soc. Trop. Med. Hyg. 65, 253

Smith, D.S., Njogu, A.R. Cayer and Marilyn, L. (1974): Freeze-fracture and other ultrastructural studie on blood-stream forms of T. brucei with particular emphasis on flagellar attachement.
Abstrac. Trans. R. Soc. Trop. Med. Hyg. 68

Smith, D.S., Njogu, A.R., Cayer, Marilyn, L. and Jarlfors (1974): Observation on freeze-fractured membranes of a trypanosome.
Tissue and Cell, 6, 233-241

Wilson, A.J. and Njogu, A.R. (1981): Animal trypanosomiasis in Lake Baringo basin. KETRI Technical Report series No. 1. Kenya Trypanosomiasis Research Institute, KETRI, Kikuyu, Kenya.

Wilson, A.J., Gatuta, G.M., Njogu, A.R., Mgutu, S.P. and Alushula, H. (1986): A simple epidemiological method for animal trypanosomiasis to provide relevant data for effective financial decision making. Vet. Parasit. 20, 261-274

II. CONFERENCE PAPERS AND PUBLICATIONS

Dolan, R.B., Njogu, A.R., Sayer, P.D., Wilson, A.J., and Alushula, H. (1985): Trypanotolerance in East African Cattle. 18th Meeting of ISCTRC, Harare, Zimbabwe. OAU/STRC Publication No. 113 p. 240-246

Dolan, R.B., Njogu, A.R., Sayer, P.D., Okech, G. and Alushula, H. (1987): Trypanotolerance in East Africa: The Orma Boran Breeding and Selection Programme. 19th Meeting of ISCTRC, Lome, Togo. (In the press).

Gould, S.S. and Njogu, A.R. (1983): Use of animal models in screening of potential trypanocide for treatment of human sleeping sickness: I. Rodents. Presented to the 4th Annual Medical Scientific Conference of KEMRI and KETRI, Nairobi, Kenya.

Gould, S.S. and Njogu, A.R. (1985): Prelimanary screening of some experimental trypanocidal compunds against drug resistant human isolates of T. rhodesiense. 18th Meeting of ISCTRC, Harare, Zimbabwe. OAU/STRC Publication No. 113 p. 130

Ismail, A.A., Njogu, A.R., Gettinby, G. and Murray, M. (1985): Susceptibility of Orma and Galana Boran cattle to infection with bloodstream forms of Trypanosoma congolense and T. vivax. 18th Meeting of ISCTRC, Harare, Zimbabwe. OAU/STRC Puplication No. 113 p. 176-181.

Kaddu, J.B. and Njogu, A.R. (1980): The Action of Lampit (Nifurtimox) and a New Compound on Trypanosoma rhodesiense. In "Recent Developments in Medical Research in Eastern Africa". 1st Annual Medical Scientific Conference, Nairobi, January - February, 1980.

Liu, M.K., Pearson, T.W., Sayer, P.D., Gould, S.S., Waitumbi, J. N. and Njogu, A.R. (1988): Detection of circulating antigens in vervet monkeys infected with Trypanosoma brucei rhodesiense: a sensitive antigen trapping ELISA for immunodiagnosis of Africa sleeping sickness. Acta Tropica. (In press).

Njogu, A.R. (1966): Antigenic variation in brucei subgroup (Trypanozoon) trypanosomes. 4th Symposium, East Africa Academy, Kampala.

Njogu, A.R. (1966): The nature of the variable antigens of and antigenic variation in brucei subgroup (Trypanozoon) trypanosomes. 11th Meeting of ISCTR, Nairobi. OAU/STRC publication No. 100 p.75-82

Njogu, A.R. (1974): The Immunochemistry of the variable antigens of T. brucei. Abstract. 3rd International Congress of Parasitology, Munich.

Njogu, A.R. (1975): Progress in antigenic ultrastructure analysis of Trypanosoma brucei. 14th Meeting of ISCTRC, Dakar. OAU/STRC publication No. 109 p. 214

Njogu, A.R. (1979): "Search for New Trypanocidal Drugs". International Congress in Chaga's Disease. Rio de Janeiro.

Njogu, A.R. (1980): Current trents in the Development of New Drugs against trypanosomea. In "Recent Developments in Medical Research in Eastern Africa". 1st Annual Medical Scientific Conference, Nairobi, January - February, 1980.

Njogu, A.R., Dolan, R.B., Sayer, P.D., Wilson, A.J., and Alushula, H. (1985): Strategic chemoprophylaxis for the control of bovine trypanosomiasis. 18th Meeting of ISCTRC, Harare. OAU/STRC Publication No. 133 p. 199-204

Njogu, A.R. and Humphreys, K.C. (1966): Electrophoretic separation and histochemical characterization of soluble proteins of brucei subgroup (Trypanozoon) trypanosomes. 11th Meeting of ISCTR, Nairobi. OAU/STRC publication No. 100 p. 69-74

Njogu, A.R., Ismail, A.A., Dolan, R.B., Okech, G., Sayer, P.D., Opiyo, E.A. and Alushula, H. (1987): Trypanotolerance in East Africa: the Orma Boran. Proceedings of Livestock Productivity and Trypanotolerance Network. ILRAD, Nairobi, Kenya. (In the press).

Njogu, A.R. and Tukei (Eds.) (1980): Proceedings of Kenya Medical Medical Research Institute and Kenya Tryapnosomiasis Research Institute, Annual Medical Scientific Conference.

Njogu, A.R. and Tukei (Eds.) (1981): Proceedings of Kenya Medical Medical Research Institute and Kenya Tryapnosomiasis Research Institute, Annual Medical Scientific Conference.

Njogu, A.R. and Tukei (Eds.) (1982): Proceedings of Kenya Medical Medical Research Institute and Kenya Tryapnosomiasis Research Institute, Annual Medical Scientific Conference.

Opiyo, E.A., Dolan, R.B., Njogu, A.R., Sayer, P.D. and Mgutu, S.P. (1986): Insecticide impregnated targets in tsetse control in Kenya. Abstract, International Congress of protozoology, Nairobi, Kenya.

Opiyo, E.A., Dolan, R.B., Njogu, A.R., Sayer, P.D. and Mgutu, S.P. (1987): Tsetse control on Galana Ranch, Kenya. 19th Meeting of ISCTRC, Lome, Togo. (In the press).

Opiyo, E.A., Dolan, R.B., Njogu, A.R., Sayer, P.D. and Mgutu, S.P. (1988): Control of tsetse on Galana Ranch, Kenya. Proc. Workshop on Regional Development and implementation of Tsetse Control Strategies for Eastern Africa with emphasis on Targets and Traps, KEKTRI, Kikuyu, Kenya. (To be published).

Opiyo, E.A., Dolan, R.B., Njogu, A.R., Sayer, P.D. and Mgutu, S.P. (1988): Tsetse control trial on Galana Ranch. Proc. 8th Annual Scientific Medical Conference of KEMRI and KETRI. (In the press).

Pearson, T.W., Liu, M., Gardiner, T.C., Longiridge, D., Beecroft, R.P., Sayer, P.D., Gould, S.S., Waitumbi, J.N. and Njogu, A.R. (1986): Use of procyclic trypanosomes for detection of antibodies in sera from vervet monkeys infected with Trypanosoma rhodesiense: an immunodiagnostic test for African sleeping sickness. Acta Tropica. 43, 391-399

Poltera, A.A., Sayer, P.D., Schmidt, H. and Njogu, A.R. (1981): A comparative pathological study of African cardiac trypanosomiasis in man, mice and monkeys. 17th Meeting of ISCTRC, Arusha. OAU/STRC Publication No. 112 p. 254

95

Sayer, P.D., Gould, S.S., Waitumbi, J.N., Murray, P.K. and Njogu, A.R. (1985): The successful treatment of Trypanosoma b. rhodesiense infected monkeys with low doses of melarsoprol or with suramin and nitroimidazole. 18th Meeting of ISCTRC, Harare, Zimbabwe. OAU/STRC Publication No. 113 p. 131

Sayer, P.D., Onyango, J.D., Gould, S.S., Waitumbi, J.N., Raseroka, B.H., Akol, G.W.O., Ndungu, J.M. and Njogu, A.R. (1987): Treatment of African Trypanosomiasis with combination of Drugs with special reference to Suramin and Nitroimidazole. 19th Meeting of ISCTRC, Lome, Togo (In the press).

Sayer, P.D., Waitumbi, J.N., Gould, S.S. and Njogu, A.R. (1983): Preliminary Results of Low Dose Melarsoprol Treatment in a vervet model of Trypanosomal Encephalitis. Presented to the 4th Annual Medical Scientific Conference of KEMRI and KETRI, Nairobi, Kenya.

Smith, D.S. and Njogu, A.R. (1974): The ultrastructural studies of T. brucei with special reference to the attachment of flagellum. Abstract. 3rd International Congress of Parasitology, Munich.

Sones, K.R., Njogu, A.R. and Holmes, P.H. (1988): Assessment of sensitivity of Trypanosoma congolense to isometamedium chloride: a comparison of tests using cattle and mice. Acta Tropica. 45, 153-164

Temu, S.E. and Njogu, A.R. (1975): A review on the use of Berenil in the treatment of human trypanosomiasis. 14th Meeting of ISCTRC, Dakar. OAU/STRC Publication No. 109 p. 47

Wilson, A.J., Njogu, A.R., Mgutu, S.P., Alushula, H., Gatuta, G. and Dolan, R.B. (1981): An economic study of the use of chemotherapy to control trypanosomiasis in cattle in Galana Ranch, Kenya. 17th Meeting of ISCTRC, Arusha. OAU/STRC Publication No. 112 p. 306

Cyrus J. Bacchi, Ph.D.
28 Perth Place
East Northport, NY 11731

Birth date: November 29, 1942
S.S. # 107-34-1154
Married, 2 children

Education

1964 - B.S.	Manhattan College	Biology
1966 - M.S.	Fordham University	Biology
1968 - Ph.D.	Fordham University	Biochemistry

Positions

1977-present	Director, Haskins Laboratories of Pace University, New York City	
1979-present	Professor of Biology	Pace University, New York City
1976-1979	Assoc. Prof. of Biology	" " " " "
1970-1976	Asst. Prof. of Biology	" " " " "
1968-1977	Research Associate	Haskins Laboratories, New York City
July-Aug.'77	Visiting Professor	University of Brasilia (Biochemistry of trypanosomes)
1965-1968	Research Assistant	Haskins Laboratories, New York City

Chief Fields of Research

Biochemistry and physiology of hemoflagellate protozoa. Enzymology - elucidation of pathways of carbohydrate metabolism and electron transport. Biochemical differences between host and parasite enzymes. Drug mode-of-action studies: subcellular in vitro and in vivo determinations. Analysis of polyamines and their synthetic enzymes in drug treated and normal parasite cell populations. Chemotherapy of hemoflagellate protozoa.

Honors

Sigma Xi - Full membership, 1968-present
American Type Culture Collection, Representative, Soc. Protozoologists, 1977-1983
" " " " Secretary, Board of Trustees, 1980-1983
Member, Steering Committee, Chemotherapy of Leishmaniasis, World Health Org. 1983-1986
Receipient, Seymour H. Hutner Prize in Protozoology, Society of Protozoologists, 1983
Advisor, Protistology Department, American Type Culture Collection, 1983-present
Member, Allergy & Infectious Diseases Study Section, N.I.H. 1984-present.

Representative Publications

Goldstone, E.M., Banerjee, S.D., Allen, J.R., Lee, J.J., Hutner, S.H., Bacchi, C.J. and Melville, J.F. 1966. Minimal defined media for vegetative growth of the acrasian Polysphonhylium pallidium. J. Protozool. 13, 171-5.

Bacchi, C.J., Hutner, S.H., Ciaccio, E.I. and Marcus, S.L. 1968. O_2 polarographic studies of soluble and mitochondrial enzymes of Crithidia fasciculata; glycerophosphate enzymes. J. Protozool. 15, 576-84.

Bacchi, C.J., Ciaccio, E.I. and Koren, L.E. 1969. Inhibition of cytoplasmic enzymes and growth of Crithidia fasciculata; screening of anti-tumor compounds. J. Bacteriol. 98, 23-8.

Bacchi, C.J., Ciaccio, E.I., O'Connell, K.M. and Hutner, S.H. 1970. Biochemical properties of trypanosomatid lactate dehydrogenase. J. Bacteriol. 102, 826-34.

Bacchi, C.J., Ciaccio, E.I., Kaback, D.B. and Hutner, S.H. 1970. Oxaloacetate production via carboxylations in Crithidia fasciculata preparations. J. Protozool. 17, 305-11

Bacchi, C.J. and Hill, G.C. 1972. Effects of acriflavine on soluble enzyme levels of Crithidia fasciculata. Exp. Parasitol. 31, 290.98.

Goldberg, B., Lambros, C., Bacchi, C.J. and Hutner, S.H. 1974. Inhibition by several standard antiprotozoal drugs of growth and O_2 uptake of cells and particulate preparations of a Leptomonas. J. Protozool. 21, 322-6.

-97

Bacchi, C.J., Marcus, S.L., Lambros, C., Goldberg, B., Messina, L. and Hutner, S.H. 1974. Unsubstituted agarose as an affinity matrix for isolation of NAD-dependent α-glycerophosphate dehydrogenase from the trypanosomatid Crithidia fasciculata. Biochem. Biophys. Res. Commun. 58, 778-86.

Bacchi, C.J., Lambros, C., Goldberg, B., Hutner, S.H. and de Carvalho, G.D.F. 1974. Susceptibility of an insect Leptomonas and Crithidia fasciculata to several established antitrypanosomatid agents. Antimicrob. Ag. Chemother. 6, 785-90.

Bacchi, C.J., Lambros, C., Ellenbogen, B.B., Penkovsky, L.N., Sullivan, W., Eyinna, E.E. and Hutner, S.H. 1975. Drug-resistant Leptomonas; Cross resistance in trypanocide-resistant clones. Antimicrob. Ag. Chemother. 8, 688-92.

Sharkey, J.B. and Bacchi, C.J. 1975. Photography of dodecylsulfate polyacrylamide gels. Functional Photography 10, 32-3.

Lambros, C., and Bacchi, C.J. 1976. Properties of a purified NAD-linked α-glycerophosphate dehydrogenase from Leptomonas sp; activation by polyamines. Biochem. Biophys. Res. Commun. 68, 658-67.

Lambros, C., Bacchi, C.J., Marcus, S.L. and Hutner, S.H. 1977. Paradoxical activation of Leptomonas NAD-linked α-glycerophosphate dehydrogenase by ethidium and Antrycide. Biochem. Biophys. Res. Commun. 74, 1227-34.

Bacchi C.J., Lipschik, G.Y. and Nathan, H.C. 1977. Polyamines in trypanosomatids. J. Bacteriol. 131, 657-61.

Bacchi, C.J., Hutner, S.H., Lambros, C., and Lipschik, G.Y. 1978. Polyamine function in trypanosomatids: activation of cytoplasmic α-glycerophosphate dehydrogenase by cationic trypanocides. In R.A. Campbell, D.R. Morris, D. Bartos, G.D. Daves, and F. Bartos, eds., Advances in Polyamine Research Vol. 2, pp. 129-38. Raven Press, New York.

Shapiro, A., Hutner, S.H., Katz, L., Bacchi, C.J., Tamburro, K.O. and Baker, H. 1978. Dense Crithidia growth and heme sparing; relation to Fe, Cu, Mo chelation. J. Protozool. 25, 530-4.

Hutner, S.H., Bacchi, C.J. and Baker, H. 1979. Nutrition of the Kinetoplastida. In W.H.R. Lumsden and D.A. Evans, eds., Biology of the Kinetoplastida, Vol. 2, pp 653-91. Academic Press, New York.

Bacchi, C.J., Vergara, C., Garofalo, J., Lipschik, G.Y., and Hutner, S.H. 1979. Synthesis and content of polyamines in bloodstream Trypanosoma brucei. J. Protozool. 26, 484-8.

Nathan, H.C., Soto, K.V.M., Moreira, R., Chunosoff, L., Hutner, S.H. and Bacchi, C.J. 1979. Curative effects of the antipiroplasms amicarbalide and imidocarb on Trypanosoma brucei infection in mice. J. Protozool. 26, 657-60.

Bacchi, C.J., Nathan, H.C., Hutner, S.H., Duch, D.S. and Nichol. C.A. 1980. Negation of trypanocidal drug cures by polyamines, In Pollock, G., ed., Current Chemotherapy and Infectious Disease (Proc. 18th Int. Congr. Antimicrob. Ag. Chemother., Boston, 1979), Am. Soc. Microbiol. Washington, D.C. pp. 1119-21.

Shapiro, A., Katz, L.H., Hutner, S.H., Harracksingh, C. and Bacchi, C.J. 1980. Crithidia media as guide to antihaemoflagellate chemotherapy aimed at porphyrin and transitional-metal metabolism. W.H.O.: Trop. Dis. Res. Ser.: 3, 401-15.

Bacchi, C.J., Nathan, H.C., Hutner, S.H., McCann, P.P. and Sjoerdsma, A. 1980. Polyamine metabolism: a potential chemotherapeutic target in trypanosomes. Science, 210, 332-4.

Marcus, S.L., Lipschik, G.Y., Trueba, G. and Bacchi, C.J. 1980. Chromatographic resolution of two DNA-polymerase activities from bloodstream forms of Trypanosoma brucei: differential responses to exogenous polyamine addition. Biochem. Biophys. Res. Commun. 93, 1027-35.

Bacchi, C.J., Nathan, H.C., Hutner, S.H., Duch, D.S. and Nichol, C.A. 1981. Polyamines prevent cures of Trypanosoma brucei infections in mice by amicarbalide and imidocarb. Biochem. Pharmacol. 30, 883-6.

Bacchi, C.J. 1981. Content, synthesis and function of polyamines in trypanosomatids: relationship to chemotherapy. J. Protozool. 23, 20-7.

McCann, P.P., Bacchi, C.J., Hanson, W.L., Cain, G.D., Nathan, H.C., Hutner, S.H., and Sjoerdsma, A. 1981. Effect on parasitic protozoa of α-difluoromethylornithine - An inhibitor of ornithine decarboxylase, in Caldarera, C.M., Zappia, V. and Bachrach, U., eds., Advances in Polyamine Research, Vol. 3, Raven Press, New York, pp. 97-110.

Marcus, S.L., Smith, S.W. and Bacchi, C.J. 1981. Polyamine stimulate DNA-directed DNA synthesis catalyzed by mammalian Type C retroviral DNA polymerases. J. Biol. Chem. 256, 3460-4.

Nathan, H.C., Bacchi, C.J., Hutner, S.H., Rescigno, D., McCann, P.P. and Sjoerdsma, A. 1981. Antagonism by polyamines of the curative effects of α-difluoromethylornithine in Trypanosoma b. brucei infections. Biochem. Pharmacol. 30, 3010-3.

Nathan, H.C., Bacchi, C.J., Sakai, T.T., Rescigno, D., Stumpf, D. and Hutner, S.H. 1981. Bleomycin-induced life prolongation of mice infected with Trypanosoma brucei brucei EATRO 110. Trans. Roy. Soc. Trop. Med. Hyg. 75, 394-8.

Shapiro, A., Hutner, S.H., Katz, L. and Bacchi, C.J. 1981. Rapid in vitro prescreen for chelators as potential trypanocides based on growth of Crithidia fasciculata. J. Protozool. 28, 370-7.

McCann, P.P., Bacchi, C.J., Clarkson, A.B. Jr., Seed, J.R., Nathan, H.C., Amole, B.O. Hutner, S.H. and Sjoerdsma, A. 1981. Further studies on difluoromethylornithine in African trypanosomes. Med. Biol. (Helsinki) 59, 434-40.

Garofalo, J., Bacchi, C.J., McLaughlin, S.D., Mockenhaupt, D., Trueba, G. and Hutner, S.H. 1982. Ornithine decarboxylase in Trypanosoma brucei brucei: evidence for selective toxicity of difluoromethylornithine. J. Protozool. 29, 389-94.

Marcus, S.L., Kopelman, R., Koll, B. and Bacchi, C.J. 1982. Effects of exogenous polyamine and trypanocides on the partially purified DNA polymerase activities from bloodstream forms of Trypanosoma brucei brucei, mouse thymus and murine leukemia virus. Mol. Biochem. Parasitol. 5, 231-43.

Shapiro, A., Nathan, H.C., Hutner, S.H., Garofalo, J., McLaughlin, S.D., Rescigno, D. and Bacchi, C.J. 1982. In vivo and in vitro activity by diverse chelators against Trypanosoma b. brucei EATRO 110. J. Protozool. 29, 85-98.

Bacchi, C.J., Nathan, H.C., Hutner, S.H., McCann, P.P. and Sjoerdsma, A. 1982. Novel combination chemotherapy of trypanosomiasis using bleomycin and DL-α-difluoromethylornithine: reversal by polyamines. Biochem. Pharmacol. 31, 2833-6.

Bacchi. C.J., McCann, P.P., Nathan, H.C., Hutner, S.H. and Sjoerdsma, A. 1982. Antagonism of polyamine metabolism - A critical factor in chemotherapy of African trypanosomiasis. Adv. Polyamine Res. Vol. 4, Raven Press, New York, pp. 221-31.

Bacchi, C.J., Garofalo, J., Mockenhaupt, D., McCann, P.P., Diekema, K.A., Pegg, A.E., Nathan, H.C., Mullaney, E.A. Chunosoff, L., Sjoerdsma, A. and Hutner, S.H. 1983. In vivo effects of DL-α-difluoromethylornithine on the metabolism and morphology of Trypanosoma brucei brucei. Mol. Biochem. Parasitol. 7, 209-25.

Clarkson, A.B., Bacchi, C.J., Mellow, G.H., Nathan, H.C., McCann, P.P. and Sjoerdsma, A. 1983. Efficacy of DFMO + bleomycin in a mouse model of central nervous system African trypanosomiasis. Proc. Natl. Acad. Sci. USA 80, 5729-33.

McCann, P.P., Bacchi, C.J., Nathan, H.C. and Sjoerdsma, A. 1983. Difluoromethylornithine and the rational development of polyamine antagonists for the cure of protozoan infection, in Singer, T.P Ondarza, R.N., eds. Mechanisms of Drug Action. Academic Press, New York, pp. 159-73.

McCann, P.P., Bacchi, C.J., Hanson, W.L., Nathan, H.C., Hutner, S.H. and Sjoerdsma, A. 1983. Methods for the study of the treatment of protozoan diseases by inhibitors of ornithine decarboxylase. Methods in Enzymol. 94, 209-13.

Hannan, J.C., Bacchi, C.J. and McCann, P.P. 1984. Induction of ornithine decarboxylase in Leptomonas seymouri. Mol. Biochem. Parasitol. 12, 117-24.

Clarkson, A.B., Bienen, E.J., Bacchi, C.J., McCann, P.P., Hutner, S.H. and Sjoerdsma, A. 1984. New drug combination for experimental late stage African trypanosomiasis: DFMO with suramin. Am. J. Trop. Med. Hyg. 33, 1073-7.

Nathan, H.C., Bacchi, C.J., Nichols, C.A., Duch, D.S., Mullaney, E.A. and Hutner, S.H. 1984. Antitumor phthalanilides active in acute and chronic Trypanosoma brucei brucei murine infections. Am. J. Trop. Med. Hyg. 33, 845-50.

Bitonti, A.J., Bacchi, C.J., McCann, P.P. and Sjoerdsma, A. 1985. Catalytic irreversible inhibition of Trypanosoma brucei brucei ornithine decarboxylase by substrate and product analogs and their effects on murine trypanosomiasis. Biochem. Pharmacol. 34, 1173-7.

Marcus, S.L., Petrylak, D.P., Burchenal, J.J. and Bacchi, C.J. 1985. Stimulation of Rauscher leukemia virus DNA polymerase DNA-directed DNA synthesis by cationic trypanocides and polyamines. Cancer Res. 45, 112-5.

Bitonti, A.J., Bacchi, C.J., McCann, P.P. and Sjoerdsma, A. 1986. Uptake of α-difluoromethylornithine by Trypanosoma brucei brucei. Biochem. Pharmacol. 35, 351-4.

Giffin, B.F., McCann, P.P., Bitonti, A.J. and Bacchi, C.J. 1986. Polyamine depletion following exposure to DL-α-difluoromethylornithine both in vivo and in vitro initiates morphological alterations and mitochondrial activation in a monomorphic strain of Trypanosoma brucei brucei. J. Protozool. 32, 238-43.

Giffin, B.F., McCann, P.P. and Bacchi, C.J. 1986. Effect of putrescine on the respiration of Trypanosoma brucei brucei. Mol. Biochem. Parasitol. 20, 165-71.

McCann, P.P., Bacchi, C.J., Clarkson, A.B. Jr., Bey, P., Sjoerdsma, A., Schechter, P.J., Walzer, P.D. and Barlow, J.L.R. 1986. Inhibition of polyamine biosynthesis by α-difluoromethylornithine in African trypanosomes and Pneumocystis carinii as a basis of chemotherapy: Biochemical and clinical aspects. Am. J. Trop. Med. Hyg. 35, 1153-6.

Chovan, J.P., Diccianni, M.B., Rainsfeld-Danse, I.H., Bacchi, C.J. and Nathan, H.C. 1986. Bleomycin for the cure of Trypanosoma brucei brucei infections in mice: Lack of pulmonary toxicity. Pharmacol. Res. Commun. 18, 867-73.

Bacchi, C.J., Nathan, H.C., Clarkson, A.B., Jr., Bienen, E.J., Bitonti, A.J., McCann, P.P. and Sjoerdsma, A. 1987. Effects of the ornithine decarobxylase inhibitors DL-α-difluoromethylornithine and α-monofluoromethyldehydroornithine methyl ester alone and in combination with suramin against Trypanosoma brucei brucei central nervous system models. Am. J. Trop. Med. Hyg. 36, 46-52.

Marcus, S.L., Nathan, H.C., Hutner, S.H. and Bacchi, C.J. 1987. Polyamines antagonize both the antileukemic activity and the reverse transcriptase stimulatory activity of 4,4'-diacetyldiphenylurea bis(guanylhydrazone) (DDUG). Biochem. Biophys. Res. Commun. 142, 422-7.

Bacchi, C.J., Berens, R.L., Nathan, H.C., Klein, R.S., Elegbe, I.A., Rao, K.V.B., McCann, P.P. and Marr, J.J. 1987. Synergism between 9-deazainosine and difluoromethylornithine in treatment of experimental African trypanosomiasis. Antimicrobiol. Agents & Chemother. 31, 1406-1413.

Fairlamb, A.H., Henderson, G.B., Bacchi, C.J. and Cerami, A. 1987. In vivo effects of difluoromethylornithine on trypanothione and polyamine levels in bloodstream forms of Trypanosoma brucei. Mol. Biochem. Parasitol. 24, 185-191.

Bacchi, C.J. and McCann, P.P. 1987. Parasitic protozoa and polyamines. In: Inhibition of Polyamine Metabolism: Biological Significance and Basis for New Therapies (P.P. McCann, A.E. Pegg and A. Sjoerdsma, eds) Academic Press, San Diego, pp. 317-344.

Yarlett, N. and Bacchi, C.J. 1988. Effect of DL-α-difluoromethylornithine on methionine cycle intermediates in Trypanosoma brucei brucei. Mol. Biochem. Parasitol. 27, 1-10

Ghoda, L.Y., Savarese, T.M., Northup, C.H., Parks, R.E., Jr., Garofalo, J., Katz, L., Ellenbogen, B.B. and Bacchi, C.J. 1988. Substrate specificities of 5'-deoxy-5'-methylthioadenosine phosphorylase from Trypanosoma brucei brucei and mammalian cells. Mol. Biochem. Parasitol., 27, 109-118.

Tyms, S., Bacchi, C.J. and Williamson, J.H. 1988. Polyamine biosynthesis as a target for treatment of infection and disease. J. Antimicrob. Chemother.

Yarlett, N. and Bacchi, C.J. 1988. Effect of DL-α-difluoromethylornithine on polyamine synthesis and interconversion in Trichomonas vaginalis grown in a semi-defined medium. Mol. Biochem. Parasitol. 31, 1-10.

CURRICULUM VITAE

Allen B. Clarkson, Jr.

New York University School of Medicine
Department of Microbiology
Division of Parasitology
550 First Avenue
New York, New York 10016
(212) 340-6759

Education:

1965	B.A. Biology	The University of the South Sewanee, Tennessee
1975	Ph.D. Zoology	The University of Georgia Athens, Georgia

Post Doctoral Training

1974-1976	(parasite immunology)	The Rockefeller University New York, New York

Academic Appointments:

1972-1973	Instructor (full time), Department of Zoology, The University of Georgia
1973-1974	Instructor (full time), Division of Biology The University of Georgia
1976-1977	Research Associate, Department of Parasitology The Rockefeller University
1977-1978	Adjunct Assistant Professor, Department of Parasitology, The Rockefeller University
1977-present	Assistant Professor, Department of Microbiology, Division of Parasitology, New York University School of Medicine
1981-present	Graduate Faculty, New York University School of Medicine

101

Other Professional Positions:

1977-1981	Steering Committee member for the W.H.O. Scientific Working Group on Chemotherapy of African Trypanosomiasis (function is similar to an NIH Study Section)
1978-present	Ad hoc committee for the Biochemistry and Immunology of Parasites discussion group which meets monthly at The Rockefeller University. This is a group composed of persons from N.Y.U., Rockefeller, Pace, Cornell, Columbia, Merck, Albert Einstein and Rutgers. Speakers come from our local group, other U.S. institutions, Europe and Africa.

Awards and Honors:

Honors on senior comprehensives for B. A. degree

NSF Traineeship and NDEA Fellowship at the University of Georgia

Sigma Xi

Major Committee Assignments:

Major participation in the physical design as well as development of initial operating procedures for our Divisional Animal Facility and extensive "trouble-shooting" during the "shake-down" period.

Coordination of the Divisional Journal Club.

Development of the Divisional brochure for recruitment of graduate students.

Professional Societies:

American Association for the Advancement of Science

Society of Protozoologists

American Society of Tropical Medicine and Hygiene

New York Academy of Science

New York Society of Tropical Medicine and Hygiene

Major Research Interests:

See "Research Career Narrative" which accompanies this C. V.

Grants Received in the Last Seven Years:

A. As Principal Investigator for Previous Grants:

1. N.Y.U. BRSG 1977-1978: "Inhibition of Trypanosome Carbohydrate Catabolism as an Approach to Chemotherapy"

2. W.H.O. 1978-1982: "Development of a Chemotherapy for African Trypanosomiasis by Inhibition of Aerobic and Anaerobic Pathways of Carbohydrate Catabolism"

3. N.Y.U. BRSG 1980-1981: "Synergism of Serum and Anti-trypanosomal Agents"

4. W.H.O. 1981-1983: "Role of Rheumatoid Factor in Control of Chagas' Disease"

5. N.Y.U. BRSG 1982-1983: "Rheumatoid Factor Amplifying Antibodies and Parasitic Infection"

6. N.I.H. 1982-1984: "Rheumatoid Factor in the Control of Parasitic Infection"

B. As Principal Investigator for Current Grants:

1. Merrell-Dow Pharmaceuticals, Inc. 1980-1984: "Examination of DFMO Alone and in Combination with Other Compounds Against a Model of African Trypanosomiasis with Central Nervous System Involvement" total $30,000

2. N.I.H. 1983-1986: "Trypanosomiasis Chemotherapy by Glycolysis Inhibition" $168,000 for the current year

C. As Associate:

1. Rockefeller Foundation 1977-1978: "Potentiation of the Immune Response to Plasmodia and Trypanosoma" **NOTE**: The purpose of the grant was to provide some basic equipment for Dr. Brohn and myself to start our laboratories when we began our posts at NYU (which it did). However, the Division Head, Dr. Nussenzweig, was principal investigator for this grant as she made the initial informal contacts and neither Dr. Brohn nor myself had been formally appointed to the faculty when it was submitted. I wrote a major portion of the proposal and Dr. Brohn and I made an oral presentation in its support.

2. N.I.H. Departmental Training Grant 1977-1984

Clarkson, Allen B., Jr.

PUBLICATIONS

Clarkson, A.B., Jr. and Brohn, F.H. "Trypanosomiasis: An approach to chemotherapy by inhibition of glucose catabolism." Science 194: 204-206 (1976)

Brohn, F.H. and Clarkson, A.B., Jr. "Quantitative effects of salicylhydroxamic acid and glycerol on Trypanosoma brucei glycolysis in vitro and in vivo." Acta Tropica 35: 23-33 (1978)

D'Alesandro, P.A. and Clarkson, A.B., Jr. "Trypanosoma lewisi: Demonstration of avidity and adsorbability of ablastin, the reproduction-inhibiting antibody." Experimental Parasitology 50: 384-396 (1980)

Brohn, F.H. and Clarkson, A.B., Jr. "Trypanosoma brucei brucei: Patterns of glycolysis at 37°C in vitro." Molecular and Biochemical Parasitology 1: 291-305 (1980)

Amole, B.O. and Clarkson, A.B., Jr. "Trypanosoma brucei brucei: Host-parasite interaction in parasite destruction by SHAM-glycerol in mice." Experimental Parasitology 51: 133-140 (1981)

Clarkson, A.B., Jr., Grady, R.W., Grossman, S., McCallum, R.G., and Brohn, F.H. "Trypanosoma brucei brucei: A systematic screening for alternatives for the SHAM-glycerol combination" Molecular and Biochemical Parasitology 3: 271-291 (1981)

McCann, P.P., Bacchi, C.J., Clarkson, A.B., Jr., Seed, J.R., Nathan, H.C., Amole, B.O. and Sjoerdsma, A. "Inhibition of ODC by DFMO in African trypanosomes and its effect on growth." Medical Biology 59: 434-440 (1981)

Clarkson, A.B., Jr. and Mellow, G.H. "Rheumatoid factor-like immunoglobulin M protects previously uninfected rat pups and dams from Trypanosoma lewisi." Science 214: 186-188 (1981)

Mellow, G.H. and Clarkson, A.B., Jr. "Trypanosoma lewisi: Enhanced resistance in naive lactating rats and their suckling pups." Experimental Parasitology 53: 217-288 (1982)

Amole, B.O., Clarkson, A.B., Jr. and Shear, H.L. "Pathogenesis of anemia in Trypanosoma brucei-infected mice." Infection and Immunity 36: 1060-1068 (1982)

Clarkson, A.B., Jr. and Amole, B.O. "Role of calcium in trypanocidal drug action." Science 216: 1321-1323 (1982)

Clarkson, A.B., Jr. and Grady, R.W. "The use of hydroxamic acids to block electron transport in pathogenic African trypanosomes." in Chemistry and Biology of Hydroxamic Acids, S. Karger, ed. H. Kehl, pp. 130-137 (1982)

Clarkson, A.B., Jr. and Mellow, G.H. "Rheumatoid factors and Chagas' disease." Science 219: 1238-1239 (1983)

Clarkson, A.B., Jr., Bacchi, C.J., Mellow, G.H., Nathan, H.C., McCann, P.P., and Sjoerdsma, A. "Efficacy of combinations of difluoromethylornithine (DFMO) and bleomycin in a mouse model of central nervous system African trypanosomiasis." Proceedings of the National Academy of Science USA 80: 5729-5733 (1983)

Clarkson, A.B., Bienen, E.J., Bacchi, C.J., McCann, P.P., Nathan, H.C., Hutner, S.H., and Sjoerdsma, A. "New drug combination for experimental late-stage African trypanosomiasis: DFMO with suramin. "American Journal of Tropical Medicine and Hygiene 33:1073-1077 (1984)

Grady, R.W., Bienen, E.J. and Clarkson, A.B., Jr. "Para-alkyloxybenzhydroxamic acids, effective inhibitors of the trypanosome glycerophosphate oxidase." Molecular and Biochemical Parasitology 19:231-240 (1986)

Grady, R.W., Bienen, E.J. and Clarkson, A.B., Jr. "Esters of 3,4-dihydroxybenzoic acid, highly effective inhibitors of the sn-glycerol-3-phosphate oxidase of Trypanosoma brucei brucei" Molecular and Biochemical Parasitology 21:55-63 (1986)

McCann, P.P., Bacchi, C.J., Clarkson, A.B., Jr., Bey, P., Sjoerdsma, A., Walzer, P.D., and Barlow, J.L.R. "Inhibition of polyamine biosynthesis by alpha-difluoromethylornithine in African trypanosomes and Pneumocystis carinii as a basis for chemotherapy: Biochemical and clinical aspects" American Journal of Tropical Medicine and Hygiene 35: 1153-1156 (1986)

Bacchi, C.J., Nathan, H.C., Clarkson, A.B., Jr., Bienen, E.J., McCann, P.P. and Sjoerdsma, A. "Activity of the polyamine antagonists alpha-difluoromethylornithine and 3,4-dehydromonofluoromethylornithine methyl ester against Trypanosoma brucei brucei central nervous system models." American Journal of Tropical Medicine and Hygiene 36: 46-52 (1987)

Clarkson, A.B., Jr., Williams, D.E. and Rosenberg, C. Efficacy of DL-alpha-difluoromethylornithine (DFMO) in a Rat Model of Pneumocystis carinii pneumonia (PCP). Antimicrobial Agents and Chemotherapy 32: 1158-1163 (1988).

Clarkson, A.B., Jr., Bienen, E.J., Pollakis, G., and Grady, R.W., 1989. Respiration of Bloodstream Forms of the Parasite Trypanosoma brucei brucei is Dependent on a Plant-like Alternative Oxidase. in press at Journal of Biological Chemistry (1989).

Clarkson, A.B., Jr., Bienen, E.J., Pollakis, G., and Grady, R.W., 1989. Trypanocidal CoQ Analogues: Their Effect on Other Mitochondrial Systems. in press at Comparative Biochemistry and Physiology (1989).

Bienen, E.J., Saric, M., Pollakis, G., Grady, R.W., and Clarkson, A.B., Jr., 1989. Evidence of alternnative oxidase-dependent oxidative phosphorylation in Trypanosoma brucei brucei transitional bloodstream forms. submitted for publication. (1989)

Bacchi, C.J., Nathan, H., Yarlett, N., Sayer, P., Njogu, A., McCann, P.P., Bitonti, A.J. and Clarkson, A.B. "Differential sensitivity of Trypanosoma brucei rhodesiense clinical isolates to difluoromethylornithine and arsenicals." submitted for publication. (1989)

Clarkson, A.B., Jr., Saric, M. and Grady, R.W. "Efficacy of Desferrioxamine, an Iron Chelator, in a Rat Model of Pneumocystis carinii pneumonia (PCP)." in preparation. (1989)

CURRICULUM VITAE

NAME: Dr. Nigel Yarlett

Current Address: Haskins Laboratories,
Pace University,
41 Park Row,
New York NY10038,
U.S.A.

Nationality: British/United States Resident IR1

Qualifications and brief statement of academic career

1976 Lady Glanely Scholarship.

1979 BSc (Hons) 2(i) Microbiology, University College, Cardiff

1982 PhD. (Science and Engineering Research Council-Collaborative Awards in Science and Engineering), postgraduate training at University College, Cardiff in collaboration with the Department of Animal Nutrition and Production, the Hannah Research Inst. Ayr, Scotland.
Thesis title: "The Biochemistry and Physiology of Some Anaerobic Protozoa".
10 publications: Developed techniques for the improved isolation of ciliates from rumen fluid. Characterized subcellular organelles which demonstrated, for the first time, the presence of hydrogenosomes in rumen holotrich protozoa. Determined the range of oxygen tolerance and demonstrated a respiratory capability of these anaerobic protozoa under controlled oxygen partial pressures. Measured the oxygen content of rumen fluid *in situ*, the first time liquid phase measurements had been attempted. Demonstrated the pathways of end product (acetate, lactate and butyrate) formation in some rumen holotrich protozoa.

Research on biochemistry of rumen entodiniomorpid protozoa at the Biochemistry Dept., Inst. of Animal Physiology, Babraham, Cambridge, with Dr. G. S. Coleman; (Nov.-Dec. 1981).

1982 Postdoctoral Research Associate, The Rockefeller University, New York, NY10021, U.S.A.

Head of Department: Professor Christian deDuve.

Isolated and characterized a low redox potential iron-sulphur protein (ferredoxin) from Trichomonas vaginalis. Showed that reduction of nitroimidazole derivatives by pyruvate:ferredoxin oxidoreductase in ferredoxin depleted hydrogenosomal extracts of Trichomonas vaginalis depended upon the one-electron midpoint potential (E_7). Further, a linear correlation with a positive slope between the logarithm of the rate and the E_7 in the range from -564 to -260mV was demonstrated.

1984 Postdoctoral Fellowship, University College, Cardiff, United Kingdom.

Head of Department: Professor David Lloyd

By use of membrane-inlet mass spectrometry I was able to show the antagonistis action of metronidazole on hydrogen production by Trichomonas vaginalis. These studies were extended to demonstrated the effects of low oxygen partial pressures on metronidazole activation by metronidazole-sensitive and -refractory strains enabling kinetic determinations of drug reduction to be obtained. I demonstrated that metronidazole refractory isolates have a defective oxidase.

In collaboration with Dr. Irwin Brown (University Hospital of Wales) I isolated two metroniszole refractory isolates from patients undergoing recurrent treatment.

In collaboration with Drs. Christopher Rowlands and John Evans (Chemistry Dept., Univ. Coll., Cardiff) demonstrated superoxide production by T. vaginalis hydrogenosomal extracts using electron spin resonance spectometry detection of spin-trapping agents.
In collaboration with Dr. Colin G. Orpin (Inst. of Animal Physiology, Cambridge) determined the mechanism of acetate production by the rumen fungus Nescallimastix patriciarum and showed for the first time the presence of hydrogenosomes in these fungi, thereby extending the knowledge of those organisms possessing these organelles to non-protozoan species.

Departmental Duties:
(a) Teaching bacteriology
(b) Tutor to a Part I Microbiology group, covering Part I course material (microscopy, eukaryote and prokaryote cells, sterilisation techniques, microbial biochemistry and physiology, microbial diversity).
(c) Supervision of third year Honours Microbiology students.

Details of Present Appointment:

Starting Date: January 1986
Position: Research Associate at Haskins Laboratories/ Adjunct Assistant Professor at Pace University.

Director of Laboratories: Dr. Cyrus J. Bacchi

Address: Haskins Laboratories,
Pace University,
41 Park Row,
New York, NY 10038
U.S.A.

Details of Research:

To improve existing chemotherapy of (a) East African sleeping sickness, caused by *Trypanosoma brucei*; (b) Trichomonasis, a sexually transmitted disease caused by *Trichomonas vaginalis*.

The thrust of the work involves an in depth study of those enzymes involved in polyamine biosynthesis, and changes in metabolic flow imposed by specific inhibitors of the pathway. *T. vaginalis* produces large quantities of putrescine, resulting in its excretion into the growth medium. The importance of putrescine production to the parasite is being investigated from two angles, (i) the possible role of polyamines as oxidation substrates for the parasite; (ii) the energy gain resulting from ATP formation via carbamyl phosphate, a product formed in the putrescine biosynthetic pathway. In addition studies concerning the methyltransferase mechanisms of these parasites are being undertaken. In particular specific methyltransferase enzymes are being characterised e.g. DNA and protein methyltransferases. This involves determination of specificity for substrates, and also some DNA purification work to determine normal methylation patterns, and leading eventually to determination of those genes in the parasite which may be under this post translational control mechanism. I have through collaboration with Merrell Dow Pharmaceuticals, Michigan Cancer Foundation, Burroughs Wellcome and Rosewall Park Memorial Institute a number of compounds specifically designed to interfere with both systems under study.

Collaboration with Dr. Laurie Roizin-Towle, Radiology Department, Columbia University, College of Physicians and Surgeons. To determine polyamine content of various cancer cell lines after heat shock treatment.

I have developed high performance liquid chromatography techniques for the analysis of polyamines in cell suspensions, methylation intermediates, and DL- -difluoromethylornithine in serum. In collaboration with Professor Seymour Hutner I am developing a defined culture medium for T. vaginalis, enabling studies on polyamine biosynthesis to be performed in the absence of exogenous diamines.

Departmental Duties:

(a) Teaching biochemistry and parasitology to biology majors.
(b) Teaching general biology to non-biology majors.
(c) Supervision of biology majors research project.

Membership of Societies:

1980 to date: The Society of General Microbiology

1986 to date: The American Society of Tropical Medicine and Hygiene

1986 to date: New York Society of Tropical Medicine

1988 to date: Fellow of the Society of Fellows of Dyson College

Grants and Awards:

1989-1993 Co-investigator NIH AI 17340

1988-1989 Co-principal investigator New York State Dept. of Environmental Conservation

applied for Principal investigator NIH FIRST

PUBLICATIONS

1. YARLETT, N. and LLOYD, D.
Effect of inhibitors on mitochondrial adenosine triphosphatase of Crithidia fasciculata: An unusual pattern of specificities. Mol. Biochem. Parasitol. (1981) 3: 13-17.

2. YARLETT, N., HANN, A.C., LLOYD, D. and WILLIAMS, A.G.
Hydrogenosomes in the rumen protozoon Dasytricha ruminantium Schuberg. Biochem. J. (1981) 200, 365-372.

3. WILLIAMS, A.G. and YARLETT, N.
An improved technique for the isolation of holotrich protozoa from rumen contents by differential filtration with defined aperture textiles. J. App. Bact. (1982) 52, 267-270.

4. LLOYD, D., WILLIAMS, J., YARLETT, N. and WILLIAMS, A.C.
Oxygen affinities of the hydrogenosome containing protozoa, Tritrichomonas foetus and Dasytricha ruminantium, and two aerobic protozoa, determined by bacterial bioluminescence. J. Gen. Microbiol. (1982) 128, 1019-1022.

5. YARLETT, N., LLOYD, D. and WILLIAMS, A.G.
Respiration of the rumen protozoon Dasytricha ruminantium. Biochem. J. 206, 259-266.

6. YARLETT, N., HANN, A.C., WILLIAMS, A>G> and LLOYD, D.
Hydrogenosomes in a mixed isolate of Isotricha prostoma and Isotricha intestinalis from ovine rumen contents. Comp. Biochem. and Physiol. (1983) 74, 357-364.

7. YARLETT, N., SCOTT, R.I., WILLIAMS, A.G. and LLOYD, D.
A note on the effects of oxygen on hydrogen production by the rumen protozoon Dasytricha ruminantium Schuberg. J. App. Bact. (1983) 55, 359-361.

8. SCOTT, R.I., YARLETT, N., HILLMAN, K., WILLIAMS, T.N., WILLIAMS, A.G. and LLOYD, D. The presence of oxygen in rumen contents and its effects on methanogenesis. J. App. Bact. (1983) 55, 143-149.

9. YARLETT, N., COLEMAN, G.S., WILLIAMS, A.G. and LLOYD, D.
Hydrogenosomes in known species of rumen entodiniomorphid protozoa. FEMS Letts. (1984) 21, 15-19.

10. GORRELL, T.E., YARLETT, N. and MULLER, M.
Isolation and characterization of Trichomonas vaginalis ferredoxin. Carlsberg Res. Commun. (1984) 49, 259-268.

11. YARLETT, N., GORRELL, T.E., MARCZAK, R. and MULLER, M.
Reduction of nitroimidazole derivatives by hydrogenosomal extracts of Trichomonas vagialis. Mol. Biochem. Parasitol. (1985) 14, 29-40.

12. YARLETT, N., WILLIAMS, A>G> and LLOYD, D. Butyrate formation from glucose by the rumen protozoon Dasytricha ruminantium. Biochem. J. (1985) 228, 187-192.

13. LLOYD, D., YARLETT, N. and YARLETT, N.C. and susceptible Trichomonas vaginalis strains by a range of nitroimidazole derivatives. Biochem. Pharmacol. (1986) 35, 61-64.

14. YARLETT, N., YARLETT, N.C. and LLOYD, D. Metronidazole-resistant clinical isolates of Trichomonas vaginalis have lowered oxygen affinities. Mol. Biochem. Parasitol. (1986) 19, 111-116.

15. YARLETT, N., YARLETT, N.C. and LLOYD, D. Ferrodoxin-dependent reduction of nitroimidazole derivatives in drug-resistant and susceptible strains of Trichomonas vaginalis. Biochem. Pharmacol. (1986) 35, 1703-1708.

16. YARLETT, N., ORPIN, C.G., MUNN, E.A., YARLETT, N.C. and GREENWOOD, C.A. Hydrogenosomes in the rumen fungus Neocallimastix patriciarum. Biochem. J. (1986) 236, 729-739.

17. LLOYD, D., YARLETT, N., YARLETT, N.C., PEDERSEN,J.Z. and KRISTENSEN, B. Metronidazole-resistant clinical isolates of Trichomonas vaginalis maintain low intracellular metronidazole radical anion levels as a consequence of defective oxygen scavenging. Acta. Universitas Carlinae-Biologica (1986) 30, 521-528.

18. YARLETT, N., YARLETT, N.C., ORPIN, C.G. and LLOYD, D. Cryopreservation of the anerobic rumen fungus Neocallimastix patriciarum. Letts. Appl. Microbiol. (1986) 3, 1-3.

19. YARLETT, N., ROWLANDS, C., EVANS, J.C., YARLETT, N.C. and LLOYD, D. Nitroimidazole and oxygen derived radicals detected by electron spin resonance in hydrogenosomes and cytosobic fractions from Trichomonas vaginalis. Mol. Biohem. Parasitol. (1987) 24, 255-261.

20. YARLETT, N., ROWLANDS, C., YARLETT, N.C., EVANS, J.C. and LLOYD, D. Reduction of niridazole by metronidazole resistant and susceptible strains of Trichomonas vaginalis. Parasitol. (1987) 94, 93-99.

21. YARLETT, N., HOF, H. and YARLETT, N.C. Comparative activities of metronidazole and niridazole against Trichomonas vaginalis. Antimicrob. Chemother. (1987) 19, 767-770.

22. YARLETT, N., ROWLANDS, C., YARLETT, N.C., EVANS, J.C. and LLOYD, D. Superoxide formation by the anaerobic rumen fungus Neocallimastix patriciarum. Arch. Microbiol. (1987) 148, 25-28.

23. LLOYD, D. JAMES, C.J., LLOYD, A., YARLETT, N. and YARLETT, N.C. The effects of oxygen on fermentation in Trichomonas foetus KVI and its variant IMR-100 with defective hydrogenosomes. J. Gen. Microbiol. (1987) 133, 1181-1186.

24. YARLETT, N. and BACCHI, C.J. Effect of DL- -difluoromethylornithine on methionine cycle intermediates in Trypanosoma brucei brucei. Mol. Biochem. Parasitol. (1988) 27, 1-10.

25. LLOYD, D., HILLMAN, K., YARLETT, N. and WILLIAMS, A.C. Hydrogen production by rumen holotrich protozoa: effect of oxygen and implications for metabolic control by in situ conditions. J. Protozool. (in press)

26. YARLETT, N. and BACCHI, C.J. Effect of DL- -difluoromethylornithine on polyamine metabolism of Trichomonas vaginalis grown in defined medium. Mol. Biochem. Parasitol. (1988) 31, 1-10.

27. YARLETT, N. Polyamine biosynthesis in Trichomonas vaginalis. Parasitology Today (invited article) (1988) 4, 357-360.

28. YARLETT, N. and BACCHI, C.J. DNA and protein methyltransferase [illegible]vities in Trichomonas vaginalis. Biochemistry a[illegible] Physiology of the Anerobic Protozoa, D. Lloyd, G. Coombs and D. Lindmark (eds). Harwood Academic Pub. (in press)

29. LLOYD, D., YARLETT, N., HILLMAN, K., PAGET, T.A., CHAPMAN, A., ELLIS, J.E. and WILLIAMS, A.G. Oxygen and aerotolerant protozoa: studies using non-invasive techniques. Biochemistry and Physiology of the Anaerobic Protozoa, D. Lloyd, G. Coombs and D. Lindmark (eds.) Harwood Academic Pub. (in press)

30. ROIZIN-TOWLE, L., YARLETT, N., PIRRO, J.P. and BAYNE, G. Lack of association between heat shock proteins and thermotolerance in human lung carcinoma cells. Can. Res. (submitted Jan. 1989)

31. RUGGERIO, V., YARLETT, N. and BACCHI, C.J. Purification and propoerties of S-adenosylmethionine synthetase from Trypanosoma brucei brucei. Experimental Parasitology (submitted Jan. 1989)

32. YARLETT, N., QUAMINA, A. and BACCHI, C.J.

· Trypanosoma brucei brucei: Activities of protein methyltransferases and effects of inhibition by sinefungin. Experiment. Parasitol. (in preparation)

33. YARLETT, N.
Fermentation products of the rumen Phycomycetes. The Anaerobic Fungi, D.O. Mountfort and C. Orpin (eds.) Marcel Dekker Inc. Pub. (in preparation)

ABSTRACTS

1. WILLIAMS, A.G. and YARLETT, N.
An improved filtration method for the isolation of holotrich protozoa from rumen contents. Soc. Gen. Microbiol. Quart. (1980) 8, 32.

2. YARLETT, N., WILLIAMS, A.G. and LLOYD, D.
Hydrogenosomes of the rumen protozoon *Dasytricha ruminantium* Schuberg. Soc. Gen. Microbiol. Quart. (1981) 8, 130.

3. YARLETT, N., LLOYD, D. and WILLIAMS, A.G.
Hydrogenosomes of the rumen protozoon *Dasytricha ruminantium* Schuberg. Symp. VI International Congress of Protozoology, Warsaw (1981), 397.

4. YARLETT, N., COLEMAN, G.S., LLOYD, D. and WILLIAMS, A.G. Distribution of hydrogenosomes in certain entodinimorphid species. Soc. Gen. icrobiol. Quart. (1982) 9, 25.

5. SCOTT, R.I., YARLETT, N., HILLMAN, K., WILLIAMS, T.N., WILLIAMS, A.G. and LLOYD, D. The presence of oxygen in rumen liquor and mass spectrometric determinations of its effects on methanogenesis. Soc. Gen. Microbiol. Quart. (1983) 10, 10.

6. LLOYD, D., WILLIAMS, A.G., YARLETT, N. and HILLMAN, K.
Similarities between rumen ciliates and trichomonads: Both possess hydrogenosomes. Banyuls Meeting on Protistology (1983).

7. YARLETT, N., GORRELL, T.E. and MULLER, M.
Metronidazole reduction by pyruvate ferredoxin oxidoreductase from *Trichomonas vaginalis*. Soc. Protozool. (1983) 30, 4A.

8. GORRELL, T.E., YARLETT, N. and MULLER, M.
Detection of a ferredoxin in hydrogenosomes of *Trichomonas vaginalis* by electron paramagnetic resonance spectroscopy. Soc. Protozool. (1983) 30, 4A.

9. YARLETT, N., YARLETT, N.C. and LLOYD, D.
Oxygen effects in *Trichomonas vaginalis* ATCC 30001, and metronidazole-resistant isolates. Symp. Gas Enzymol. (1984) Odense University, Denmark.

10. YARLETT, N., YARLETT, N.C. and LLOYD, D.
Metronidazole-resistant clinical isolates of *Trichomonas vaginalis* have lowered oxygen affinities. Int. Symp. on Trichomonas and Trichomoniasis. Prague, Czech. June 1985.

11. YARLETT, N. and BACCHI, C.J.
Polyamine uptake and conversion in the protozoan Trichomonas vaginalis. Gordon Research Conference on Polyamines, New London, New Hampshire, July 1987.

12. YARLETT, N. and BACCHI, C.J.
Effect of DL- -difluoromethylornithine (DFMO) on metabolite pools of intermediates of transmethylation reactions in Trypanosoma brucei. 36th Ann. Meeting American Soc. Trop. Med. Hyg., Los Angeles, CA Nov.-Dec. 1987. p. 229.

13. ROIZIN-TOWLE, L., PIRRO, J. and YARLETT, N.
Accelerated decay of thermotolerance by perturbation of polyamine biosynthesis. Radiation Res. Soc. 36th Ann. Meeting, Philadelphia, PA. 1988.

14. ROIZIN-TOWLE, L., YARLETT, N., PIRRO, J.P. and BAYNE, G. Inhibition of polyamine biosynthesis and hypoxic cell sensitization in human lung carcinoma cells. Chemical Modifiers in Cancer Tretment VIth Int. Meeting, Villejuif, France, 1988.

15. YARLETT, N. and BACCHI, C.J.
Inhibition of Trichomonas vaginalis growth in defined media by DL- -difluoroemthylornithine. Soc. Protozool., Bristol, July 1988.

16. YARLETT, N. and BACCHI, C.J.
DNA and protein methyltransferases in Trichomonas vaginalis. Symp. on Anaerobic Protozoa, satellite meeting of the Soc. Protozool., Cardiff, July 1988.

17. LLOYD, D., YARLETT, N., HILLMAN, K., PAGET, T., CHAPMAN, A. and ELLIS, J. Oxygen and aerotolerant protozoa. Symp. on Anaerobic Protozoa, satellite meeting of the Soc. Protozool., Cardiff, July 1988.

CURRICULUM VITAE

name:	Paul David SAYER
birth	[redacted], [redacted], [redacted], [redacted]
marital status	Married with two children (1969,1970)
education	St Lawrence College, Ramsgate, England
university	Glasgow University
qualifications	Bachelor of Veterinary Medicine and Surgery 1964
	Member of the Royal College of Veterinary Surgeons 1964
	Fellow of the Royal College of Veterinary Surgeons 1971

APPOINTMENTS

Kenya Trypanosomiasis Research Institute

1981 to date — Principal Research Officer

1979 -1980 — Consultant veterinarian

Institute of Primate Research

1975 - 1984 — Consultant Clinical veterinary surgeon

Washington State University

1979-1981 — Veterinarian - Small Ruminant - Collaborative Research Support Program [SR-CRSP]

University of Nairobi

1971-1979 — Senior Lecturer, Department of Clinical Studies

1969-1971 — Lecturer, Department of Clinical Studies in charge of Small Animal Clinic

University of Glasgow

1968-1969 — Lecturer, Department of Medicine and Department of Surgery

University of East Africa

1966-1967 — Clinician - Small Animal Clinic

1965 — Clinician - Large Animal Clinic

1964-1965 — **Locum tenens** in various veterinary practices in: Argyllshire, Surrey, Essex, London, Hertfordshire

RECENT PUBLICATIONS

Waitumbi,J.N., P.D,Sayer, & S.S.Gould, (1988) Evidence of blood cerebrospinal fluid barrier permeability impairment in Trypanosoma rhodesiense infection in vervet monkeys. Bull. Soc. Path. Ex. 81 502-505.

Price J.E., P.D.Sayer, T.T.Dolan (1987) An improved method of diagnosis exposes a wide variety of clinical signs of canine ehrlichiosis. Trop. Anim. Hlth & Prod 19 1-8

Waitumbi,J.N.; Sayer, P.D. & Gould, S.S. (1986) Evidence of blood cerebrospinal fluid barrier permeability impairment in chronic Trypanosoma rhodesiense infection in a vervet monkey. Trans.Roy. Soc. Trop.Med. & Hyg. 80 548

Poltera A.A., P.D.Sayer, G.Brighouse, D.Bovell, & W.Rudin (1985) Immunopathological Aspects of trypanosomal meningoencephalitis in vervet monkeys after relapse following Berenil treatment. Trans. Roy. Soc. Trop. Med. & Hyg. 79 527-531

Poltera A.A., P.D.Sayer, W.Rudin, D.Bovell, (1985) Trypanosomal cardiac valvulitis in vervet monkeys. Trop. Med. Parasit. 36 77-80

Kyambi J.M.,K.Tarara, N.Dullambrsein, P.D.Sayer, M.G.Sulaman (1985) A comparison of streptokinase/streptodornase with 5% dextran 70 for the prevention of peritoneal adhesions. Proceedings of first annual scientific session of the Academy of Surgical Research: Surgical Research - Recent Developments

Mwamin F.M.,P.D.Sayer, J.C.Njanja, J.J.Bell (1985) Tick survey on goats and sheep in Kenya. Trop Anim. Hlth & Prod 17 102-106

Omara-Ojungu A.L., S.Varma, P.D.Sayer (1985) Trypanosomiasis of bovine genitalia with carcinoma of the vulva. Vet.Rec.117 518-520

[illegible] R.D.Dolan, R.J.Wilson, P.D.Sayer (1985) Trypanotolerance in East African Boran cattle. Vet.Rec.117 [illegible]

Attachment 4

MINISTRY OF RESEARCH, SCIENCE AND TECHNOLOGY

Telephone: Kikuyu (0154) 32960-4
Telex: 25556 KETRI
Telegraphic Address: "TRYPS", Kikuyu
Telefax No.: 32397
When replying please quote
Ref. No. C/TR/A/87/III/23
and date
All correspondence to be addressed to the director.

KENYA TRYPANOSOMIASIS RESEARCH
INSTITUTE, MUGUGA
P.O. Box 362
KIKUYU

....., 19.....

8 March, 1991

Dr Miloslav Rechcigl, Jr, PhD,
Research Review Director
Office of the Science Advisor
Program in Science and Technology Cooperation
AID/SCI, Room 320 SA 18
Agency for International Development
Washington D.C. 20523

Dear Dr Rechcigl,

Combination therapy for *Trypanosoma brucei rhodesiense* Infections (Project No 10.410)

Thank you for you letter of January 24 '91, in which you indicate that there is one proviso and one of the special concerns to be readdressed.

I attach a statement from the Chairman of the Institutional Animal care and Use Committee certifying KETRI's position regarding animal welfare.

With regard to the three visits each year by US scientists. The nature of the work is intensive and involves a high degree of technology transfer with respect to culture, biochemical and pharmacokinetic techniques. This has been carefully considered. It consists of one period of six weeks each year when two US scientists are in Kenya working alongside Kenya scientists and one visit later in the year. The only workable alternative for this particular project would be for a Kenyan scientist to visit New York once each year in place of one of the US visits.

If the latter arrangement were more acceptable, it would be necessary to increase the per diem allowances to cover six weeks residence in New York per year.

The former arrangement was shown to be most productive during the last PSTC project, however when the number of visits decreased there was a noticable decline in the pace and extent of progress.

I look forward to hearing from you and would then hope to initiate this project as soon as possible.

Yours sincerely

Dr J.K.Omuse
DIRECTOR

MINISTRY OF RESEARCH, SCIENCE AND TECHNOLOGY

Telephone: Kikuyu (0154) 32960–4
Telex: 25556 KETRI
Telegraphic Address: "TRYTS", Kikuyu
Telefax No.: 32397
When replying please quote
Ref. No. ...C/TR/A/87/111/22
and date
All correspondence to be addressed to the director.

KENYA TRYPANOSOMIASIS RESEARCH
INSTITUTE, MUGUGA
P.O. Box 362
KIKUYU

....., 19.....

5 March, 1991

Dr M. Rechcigl, Jr, PhD,
Research Review Director
Office of the Science Advisor
Program in Science and Technology Cooperation
AID/SCI, Room 320 SA 18
Agency for International Development
Washington D.C. 20523

Dear Dr Rechcigl,

Re: Project No:10.410 - Combination therapy for *Trypanosoma brucei rhodesiense* Infections

In response to your letter of January 24th in which you requested information regarding animal welfare at KETRI.

We are able to confirm that an Institutional Animal Care and Use Committee is operative at KETRI and that KETRI does abide by the recommendations set out in the "Guide to the Care and Management of Laboratory Animals in Kenya", a copy of which has been sent to you.

Sincerely

Clifford R. Roberts, DVM
Chairman
Institutional Animal Care and Use Committee