PD-AAX-368
34774
4.180

Fourth Quarterly Report
Feb. 19, 1987 - June 19, 1987

Grant No. DPE-5542-G-Ss-4057-00

RESEARCH AND DEVELOPMENT OF SOLAR-POWERED DESICCANT REFRIGERATION FOR COLD-STORAGE APPLICATIONS

Illinois Institute of Technology
Chicago, Illinois

and

Asian Institute of Technology
Bangkok, Thailand

OCT 16 1987

The fourth report includes:

1. An analysis of a closed-cycle adsorption system using regenerative heat and mass exchangers, prepared by IIT, Chicago.

2. An analysis and design of an activated charcoal methanol adsorption refrigerator, prepared by AIT, Bangkok.

APPLICATION OF A REGENERATIVE HEAT AND MASS EXCHANGER TO CLOSED-CYCLE ADSORPTION SYSTEMS

by

A. Hajji
Illinois Institute of Technology
Mechanical engineering Department
10 West Thirty-Second Street
Chicago, IL 60616, U.S.A.

W.M. Worek*
University of Illinois at Chicago
Mechanical engineering Department
Box 4348, Chicago, IL 60680, U.S.A.

Z. Lavan
Illinois Institute of Technology

1. INTRODUCTION

Closed-cycle cooling/heating systems using solid adsorbents that have been described [1,2,3] are characterized by COP's smaller than unity and are generally based on daily cycles or work only intermittently. Recently Tchernev [4] suggested that by using the concept of regeneration, the COP of closed-cycle adsorption cooling /heating systems can be significantly improved.

The system described by Tchernev [4] which is being developed by the Gas Research Institute, consists of two zeolite containers which alternatively undergo adsorption and desorption. A reversible pump permits the circulation of oil from a boiler at 200° C through the zeolite containers. The oil-air heat exchangers cool the oil to the ambient or cold temperature, T_c, before entering the adsorbing compartment. Two outside fluid loops remove the heat and the cooling effect from the walls of the zeolite containers. Fig. 1 schematically shows the system described above.

2. OPERATING PRINCIPLE OF A REGENERATIVE ADSORPTION SYSTEM

The Zeolite-Water pair undergoes a cyclic process very similar to other adsorption systems used in solar heating/cooling [1,2,3]. This cycle is conveniently shown on the (T_s,T) diagram as given in Fig. 2.

2.1 The Regeneration Process.

Referring to Fig. 3a, this process starts at point (a) of the cycle where the vapor phase is at pressure p_{ev} (corresponding to the evaporator temperature T_{ev}) and the adsorbate mass fraction w is at its maximum value of the cycle. The one-way valve, C_2, is closed. At this moment the pump is reversed and hot oil flows into the zeolite-oil heat exchanger. As the temperature of the adsorbent increases, desorption starts and the pressure increases closing the one-way valve, C_1. Before the pressure reaches p_{co}, the process continues at constant volume. The amount of water desorbed is usually very small and the process can be represented by the isoster a-b. When the pressure p_{co} is attained the one-way valve, C_2, opens

2.2 The Adsorption Process.

Referring to Fig. 3b, at the end of the desorption process, the pump is reversed and cold oil flows to the zeolite container. As the temperature decreases, water vapor is adsorbed and the pressure drops. The one-way valve, C_2, closes and a second constant-volume process occurs which is approximated by the isoster c-d. When the pressure decreases to p_{ev} the one-way valve, C_1, opens allowing a liquid film to flow and evaporate on the walls of the zeolite container. If the pressure difference (p_{co}-p_{ev}) is not sufficient an auxilliary small pump should be used to bring the liquid adsorbate to the top of the zeolite container. The cooling effect, caused by evaporation on the container wall, is brought to the space to be cooled by a second outside loop.

3 DETAILED DERIVATION OF THE GOVERNING EQUATIONS OF AN ADSORPTION REGENERATOR

The energy equations of one period of solid adsorption regeneration operation are somewhat similar to those of classical (heat transfer only) regenerator theory [5,6]. The difference lies in the term corresponding to heat of adsorption in the energy equation of the solid adsorbent and the additional difficulty due to the coupling with the nonlinear integral equation of the pressure. An element of the regenerator of length Δz (Fig. 4) is used to derive the energy and mass balances. The following additional approximations are made to simplify the problem:

1. Negligible cross-stream temperature and uptake gradients.
2. Negligible heat conductivity in the longitudinal direction.
3. Uniform liquid velocity and time independent flow rate
   Constant densities and specific heats.
5. Constant heat and mass transfer coefficients.
6. Uniform gas phase pressure throughout the regenerator.

3.1 Dimensional Form of the Equations.

are obtained by considering the energy exchanged between the small differential element and the flowing liquid between times t and t+Δt. We define:

δQ_{sa} sensible heat gained by adsorbent=$[\delta m_a(C_a+wC_s)+\delta m_c C_c]\Delta T$

δQ_{ads} heat of adsorption= $-q_{st}(\delta m_a)\Delta w$

δQ_{tot} heat exchanged by convection = $(P_f \Delta z)\, h\, (T_f - T)$

δQ_{sf} sensible heat gained by fluid = $(\rho_f A_f \Delta z)\, C_f \Delta T_f$

δQ_{adv} advective heat gained by fluid= $m_f C_f[t_f(z+\Delta z)-T_f(z)]\Delta t$

The energy balances for the adsorbent and the fluid are as follows:

$$\delta Q_{sa} + \delta Q_{ads} = \delta Q_{tot}$$

$$\delta Q_{sf} + \delta Q_{adv} = -\delta Q_{tot}$$

Replacing each of the energy flows by their respective expressions, we obtain:

$$\rho_a A_a C_a\left[1+(C_s/C_a)W+\frac{\rho_c A_c C_c}{\rho_a A_a C_a}\right]\frac{\partial T}{\partial t} - \rho_a A_a q_{st}\frac{\partial w}{\partial t} = P_f\, h(T_f - T) \qquad (1)$$

is the difference $(w_{eq}-w)$ and introduce a constant mass transfer coefficient h_m such that

$$\rho_a A_a(\partial w/\partial t) = h_m (w_{eq} - w) \tag{3a}$$

w_{eq} is the equilibrium value of the uptake at (T,T_s) thus

$$T_s = F(T,w_{eq}) \tag{3b}$$

3.1.3 Relation Giving the Pressure Variations. A final equation is needed which relates the variations of the pressure in the gas phase to those of T and w. We will consider the two cases of constant pressure and constant-volume processes.

1. For a constant-pressure process, p (or T_s) is known thus:

$$T_s = F(T,w_{eq}) = \text{Constant} \tag{4}$$

2. For a constant-volume process, it is shown [8] that:

$$\frac{\partial T_s}{\partial t} = \frac{R T_s^2 \int_0^l \left\{ -\frac{\rho_a r}{\varepsilon p} \frac{\partial w}{\partial t} + \frac{1}{T^2} \frac{\partial T}{\partial t} \right\} dz}{L(T_s) \int_0^l \frac{dz}{T}} \tag{5}$$

3.1.4 Initial and Boundary Conditions. Tc start the computations, we can assume uniform temperature and uptake.

For the following adsorption period:

at $z=l$ $\quad T_f(l,t)=T_c$

at $t=\tau$ $\quad T(z,\tau)$ and $w(z,\tau)$ known from the previous period

3.2 Nondimensional Governing Equations.

The previous equations can be greatly simplified by introducing the following dimensionless parameters and variables:

$\zeta=z/l$ where l is the length of the regenerator.

$\eta=[t-(z/V)] / \tau_o$ where $\tau_o=l/V$ is a characteristic time

$\theta=(T-T_c)/(T_h-T_c)$; $\theta_f=(T_f-T_c)/(T_h-T_c)$; $\theta_s=(T_s-T_{ev})/(T_{co}-T_{ev})$

$\pi=(p-p_{ev})/(p_{co}-p_{ev})$; $\varphi(\theta,w)=q_{st}(T,w)/L_o$; $\lambda(\theta_s)=L(T_s)/L_o$

$\Phi(\theta,w)=[F(T,w)-T_{ev}]/(T_{co}-T_{ev})$; $\gamma(\theta,w)=G(T,w).\ (T_h-T_c)$

where L_o is a characteristic values of q_{st} and L.

$\Pi_h=\tau_h/\tau_o$ the dimensionless time of the hot period

$\Pi_c=\tau_c/\tau_o$ the dimensionless time of the cold period

$E_o=(\rho_c A_c C_c)/(\rho_a A_a C_a)$ $\quad E_1=C_s/C_a$ $\quad E_2=(\rho_f A_f C_f)/(\rho_a A_a C_a)$

$$(1 + E_o + E_1 w)(\partial\theta/\partial\eta) - E_3\varphi(\tau,w)(\partial w/\partial\eta) = E_4(\theta_f - \theta) \qquad (1^*)$$

$$(\partial\theta_f/\partial\eta) = (E_4/E_2)(\theta - \theta_f) \qquad (2^*)$$

$$(\partial w/\partial\eta) = E_{4m}(w_{eq} - w) \qquad (3a^*)$$

$$\theta_s = \Phi(\theta, w_{eq}) \qquad (3b^*)$$

$$\Phi(\theta, w_{eq}) = \begin{cases} 0 & \text{during adsorption} \\ 1 & \text{during desorption} \end{cases} \qquad (4^*)$$

$$\frac{\partial\theta_s}{\partial\eta} = \frac{[\theta_s (E_8 - 1) + 1]^2}{(E_8 - 1) E_{10} \lambda(\theta_s)} \frac{\int_0^1 \left\{ \frac{-E_5}{[\pi (E_7 - 1) + 1]} \frac{\partial w}{\partial\eta} + \frac{(E_6 - 1)}{[\theta (E_6 - 1) + 1]^2} \frac{\partial\theta}{\partial\eta} \right\} d\zeta}{\int_0^1 \frac{d\zeta}{\theta (E_6 - 1) + 1}} \qquad (5^*)$$

The choice of the set of equations to solve depends on the type of process under consideration. For a constant-volume process, the unkowns θ, θ_f, w, w_{eq} and θ_s are obtained by solving the set of Eqs. {(1*,2*,3a*,3b*,5*)} and for a constant-pressure process, the unkowns θ, θ_f, w, and w_{eq} are obtained by solving the set of Eqs. {(1*,2*,3*,3b*)}.

4. ANALYSIS OF PERFORMANCE

If we analyze the overall cooling/heating system and consider the quantities of energy exchanged with the outside elements, the following global energy balance can be written:

$$Q_{bo} + Q_{eva} = Q_{ex} + Q_{co} \tag{6}$$

The system coefficients of performance for cooling and heating are defined as:

$$COP_{cool} = Q_{ev} / Q_{bo} \tag{7}$$

$$COP_{heat} = Q_{co} / Q_{bo} \tag{8}$$

In order to express both COP's in terms of the profiles of temperature and uptake, the following quantities need to be defined and calculated:

- The amount of desorbed species during desorption process:

$$m_{des} = -\int_0^{\tau_h} \left[\int_0^{l} \rho_a (\partial w/\partial t)\, A_a\, dz \right] dt = -\rho_a A_a \int_0^{l} [w(z,0) - w(z,\tau_h)]\, dz \tag{4-9}$$

- The cooling effect obtained in the evaporator:

$$Q_{ev} = \left[L(T_{ev}) - C_L (T_{co} - T_{ev}) \right] m_{des} \tag{10}$$

- The sensible heat gained by the desorbing container:

$$Q_{des} = -\int_0^{\tau_h} [\int_0^{l} \rho_a \ (\partial w/\partial t) \ A_a q_{st} \ dz] \ dt \qquad (12)$$

- The total heat exchanged between the fluid and the solid parts of the desorbing container:

$$Q_{flui} = -\int_0^{\tau_h} [\int_0^{l} h P_f (T_f - T) \ dz] \ dt \qquad (13)$$

- The energy generated during the adsorption process:

$$Q_{gene} = \rho_f C_f A_f V \int_0^{\tau_c} [T_h - T_f (0,t)] \ dt \qquad (14)$$

The energy balance for the desorption period can be written as:

$$Q_{flu} = Q_{sen} + Q_{des} \qquad (15)$$

The cycle cooling COP is given by:

$$COP_{cycle} = Q_{ev} / Q_{flu} \qquad (16)$$

Similar heat quantities can be defined for the adsorption phase. The expressions are exactly similar to Eq.s (9,14) and only a minus sign needs to be included. Introducing the non-dimensional integrals I_1, I_2, I_3, I_4, I_5 and I_6 defined by:

$$I_3 = -\int_0^{\Pi_h} \left[\int_0^1 \varphi\,(\partial w/\partial \eta)\, d\zeta\right] d\eta \tag{17c}$$

$$I_4 = \int_0^{\Pi_h} \left[\int_0^1 (\theta_f - \theta)\, d\zeta\right] d\eta \tag{17d}$$

$$I_5 = \int_0^{\Pi_h} \theta_f\,(1,\eta)\, d\eta \tag{17e}$$

$$I_6 = \int_0^{\Pi_c} \left[1 - \theta_f\,(1,\eta)\right] d\eta \tag{17f}$$

Eqs. (7) to (15) can be simplified to:

$$COP_{cool} = [\lambda(\theta_{ev}) - \text{const}]\, I_1 / (I_6/E_3) \tag{7*}$$

where, $\text{const} = E_{11}\,(E_8-1) / [E_3 E_8 E_9 (E_6-1)]$

$$COP_{heat} = \lambda(\theta_{co})\, I_1 / (I_6/E_3) \tag{8*}$$

$$m_{des} = M_a I_1 \tag{9*}$$

$$Q_{ev} = M_a L_o [\lambda(\theta_{ev}) - \text{Const}]\, I_1 \tag{10*}$$

$$Q_{sen} = M_a C_a (T_h - T_c)\, I_2 = M_a L_o / (I_2/E_3) \tag{11*}$$

5. NOTION OF IDEAL REGENERATOR

The "ideal regenerator" is characterized by infinite heat and mass transfer coefficients. Consequently the local temperatures of the solid adsorbent T and the liquid T_f are equal, and thermodynamic equilibrium exists ($w=w_{eq}$). The governing Eqs. (1) and (2) are combined to yield a single energy equation:

$$\rho_a A_a C_a [1+(C_s/C_a)W+\frac{\rho_c A_c C_c}{\rho_a A_a C_a}] \frac{\partial T}{\partial t} - \rho_a A_a q_{st} \frac{\partial w}{\partial t}$$

$$= \rho_f A_f C_f (\frac{\partial T_f}{\partial t} + V \frac{\partial T_f}{\partial z}) \qquad (18)$$

or in dimensionless form:

$$(1 + E_o + E_1 w)(\partial\theta/\partial\eta) - E_3\varphi(\tau,w)(\partial w/\partial\eta) = - E_2 (\partial\theta/\partial\zeta) \qquad (18^*)$$

The boundary conditions are:

$\theta(0,\eta)=1$ during the desorption process

$\theta(0,\eta)=0$ during the adsorption process

The initial condition at the begining of each period is:

$\theta_h(\zeta,0) = \theta_c(1-\zeta, \tau_c)$ for the desorption process

$\theta_c(\zeta,0) = \theta_h(1-\zeta, \tau_h)$ for the adsorption process

6. NUMERICAL SOLUTION OF THE GOVERNING EQUATIONS

In this section, the numerical method and difficulties of the simulation will be presented first and the results of the numerical study will be given in terms of the dimensionless parameters introduced in section 3.2.

6.1 Wendroff's Scheme for First Order Hyperbolic Equations.

The governing equations (1) and (2) are of hyperbolic type. A general formulation of such system of equations can be made in the following matrix form:

$$\underset{\approx}{A} \frac{\partial \underset{\sim}{U}}{\partial \zeta} + \underset{\approx}{B} \frac{\partial \underset{\sim}{U}}{\partial \eta} = \underset{\sim}{C} \qquad (19)$$

where U is the unknown vector and A,B and C are specified functions of U, ζ and η. Wendroff's scheme consists of approximating the derivatives at point P (see Fig. 5) using the following central differences:

$$\left.\frac{\partial \underset{\sim}{U}}{\partial \zeta}\right|_P = \frac{1}{2}\left[\left.\frac{\partial \underset{\sim}{U}}{\partial \zeta}\right|_H + \left.\frac{\partial \underset{\sim}{U}}{\partial \zeta}\right|_F\right]$$

" " " "

$$\left.\frac{\partial \underset{\sim}{U}}{\partial \eta}\right|_P = \frac{1}{2}\left[\left.\frac{\partial \underset{\sim}{U}}{\partial \eta}\right|_G + \left.\frac{\partial \underset{\sim}{U}}{\partial \eta}\right|_E\right]$$

$$= \frac{1}{2}\left[\frac{\underset{\sim}{U}_D - \underset{\sim}{U}_A}{\Delta\eta} + \frac{\underset{\sim}{U}_C - \underset{\sim}{U}_B}{\Delta\eta}\right]$$

Substituting in eq. (19) and rearranging yields the following:

$$\underset{\sim}{U}_C = \underset{\sim}{U}_A + (p\underset{\approx}{A} + \underset{\approx}{B})^{-1}(p\underset{\approx}{A} - \underset{\approx}{B})(\underset{\sim}{U}_C - \underset{\sim}{U}_B)$$

$$+ 2(\Delta\eta)(p\underset{\approx}{A} + \underset{\approx}{B})^{-1}\underset{\sim}{C} \qquad (20)$$

where $p=\Delta\eta/\Delta\zeta$. This scheme is explicit for initial-boundary value problems for which U is specified at $\eta=0$ and $\zeta=0$. When no boundary condition is prescribed at $\zeta=0$, an other scheme should be used at the first node of the finite-difference mesh before Eq. (20) can be implemented. For the case of a single equation with constant coefficients, Wendroff's scheme has the advantages of being of 2nd order accuracy, explicit and unconditionally stable.[7]

6.2 Finite Difference Form of the Governing Equations of an Ideal Regenerator.

Eq. (18) is of the form of Eq. (19) with scalar coefficients

point P using the average values:

$$w_P = (w_i^j + w_{i+1}^j + w_i^{j+1} + w_{i+1}^j)/4$$

and

$$\theta_P = (\theta_i^j + \theta_{i+1}^j + \theta_i^{j+1} + \theta_{i+1}^j)/4$$

For example A is calculated using:

$$A = [1 + E_o + E_1 \frac{(w_i^j + w_{i+1}^j + w_i^{j+1} + w_{i+1}^j)}{4}]$$

During a constant-volume process, Eq. (5*) is solved using the explicit scheme:

$$\theta_s^{j+1} = \theta_s^j + \frac{[\theta_s^j (E_8 - 1) + 1]^2}{(E_8 - 1) E_{10} \lambda(\theta_s^j)} \frac{S_1^j + S_2^j}{S_3^j} \qquad (22)$$

where the quantities S_1, S_2 and S_3 are the approximated integrals:

$$S_1^j = \frac{-E_5}{[\pi^j (E_7 - 1) + 1]} \sum_{i=1}^{i=N} (w_i^{j+1} - w_i^j) e_i \Delta\zeta$$

$$S_2^j = (E_6 - 1) \sum_{i=1}^{i=N} \frac{(\theta_i^{j+1} - \theta_i^j) e_i}{i^2} \Delta\zeta$$

During the constant-pressure phase, θ_s is given by:

$$\Phi\left(\theta_{i+1}^{j+1}, w_{i+1}^{j+1}\right) = \begin{cases} 0 & \text{during adsorption} \\ 1 & \text{during desorption} \end{cases} \tag{23}$$

The equilibrium relation (3b*) is written in the form:

$$\theta_s^{j+1} = \Phi\left(\theta_{i+1}^{j+1}, w_{i+1}^{j+1}\right) \tag{24}$$

6.3 <u>Method of Numerical Solution</u>.

A fortran program was written to simulate the behaviour of an ideal adsorption regenerator. The grid used for the finite-difference solution is shown in Fig. 5 and the flowchart of the program is given in Fig. 6a,b. The procedure of calculations for a constant-volume phase can be summarized as follows:

1. θ_s at at the $(j+1)^{th}$ η-step is estimated.
2. θ and w at the $(j+1)^{th}$ η-step are estimated in order to evaluate A,B and C.
3. A corrected value of θ^{j+1} is calculated using the boundary condition or Eq. (21).

   Eq. (24) is used to calculate a corrected w^{j+1}.

to calculate a corrected value θ_s at step η-step (j+1). If the difference is larger than ε a "new estimation" is made and steps (2-6) are repeated.

8. If the difference is smaller than ε, the solution proceeds to the next η-step.

For a constant-pressure phase, θ_s is known and the steps (1,6,7,8) are not necessary.

6.4 Intermediate Estimations and Numerical Stability.

The stability of the numerical solution is strongly dependent on the estimations needed at steps (5) and (6). A simple use of the calculated value is not appropriate to guarantee stability. To overcome this problem, procedures of intermediate estimations based on the physical arguments are developed.

6.4.1 Estimation of w^{j+1} and θ^{j+1}. The term C in Eq. (21), corresponding to the heat of adsorption, is very important compared to the rest of the terms in the energy balance. But when w^{j+1} is approximated by w^j at step (2), the term C is neglected. This leads to an overestimated value of θ^{j+1} (during desorption) and an under estimated value of w^{j+1} which cannot be used as new estimations.

underestimated the calculated value of θ^{j+1} is larger than its equilibrium value. The opposite is true when w^{j+1} is overestimated. This allows a convergent interval halfing method. Fig. 7a is a graphical illustration of this iterative method.

6.4.2 Estimation of θ_s^{j+1} During a Constant-volume Phase. Eq. (22) is very sensitive to the estimation of the term $(w^{j+1}-w^j)$. An overestimation by a very small amount leads to values of much larger than unity during desorption. These values cannot be used in the following iteration. To guarantee convergence, a similar interval-halfing method as in section 6.1 is used. The upper limit for θ_s^{j+1} during desorption for example is $\min(\theta_{s,estim}^{j+1},1)$ and its lower limit is $\max(\theta_{s,estim}^{j+1},0)$. Fig. 7b is a graphical illustration of this method.

6.5 General Aspects of the Numerical Solution.

6.5.1 Stability and Convergence. The procedure discussed in section 6.4 made the iterative method to converge to some solution of the governing equations. An other question is to know how this solution is affected by the size of the steps ($\Delta\zeta$) and ($\Delta\eta$). To check this dependency, several combinations of these parameters have

with $(\Delta\zeta)=1/40$ $\qquad 0.0625 < (\Delta\eta)_{cr} < 0.125$

This suggests that a stability condition exists and is approximately expressed by: $(\Delta\eta/\Delta\zeta) > 2.5$. Table 1 shows that when $(\Delta\eta)=0.25$ no major change in the solution is obtained by decreasing $(\Delta\zeta)$ from 1/40 to 1/60 .

For the constant-pressure phase the step $(\Delta\eta)$ can be made much smaller. With $\Delta\zeta=1/40$ the results given in table 2 show that the profiles of temperature obtained corresponding to $\Delta\eta=0.025$ and $\Delta\eta=0.0125$ agree to about 10% and an even better agreement is obtained when integral quantities such as the desorbed mass or the cooling effect is calculated.

Based on the above observations, we retained the following steps in the study of the influence of different parameters on the systen performance:

For a constant-volume phase: $\Delta\zeta=1/40$ $\Delta\eta=0.25$

For a constant-pressure phase: $\Delta\zeta=1/40$ $\Delta\eta=0.025$

6.6 <u>An Example</u>.

To discuss the profiles of temperature, uptake , energy and mass quantities...etc, the following example have been chosen:

$\Pi = 8.0$

Adsorption pair: Synthetic zeolite 13X-Water (data of [10])

Starting from an initial state at which $\theta = 0$, a number of iterations are performed (3 to 4) before the periodic regime is reached. Fig. 8 shows the profiles of temperature as function of ζ as the wave travels along the regenerator. Fig. 9 shows the variations with η of the temperature at the ends of the reactor. The areas under these curves is directly related to the regenerated energy and the energy lost at the air/oil heat exchanger. Fig. 10 plots the cooling/heating effects versus time for $\Pi = 10$. It is seen that after the temperature wave has crossed the regenerator, the desired effect doesn't increase while the heat lost at the heat exhanger increases causing the system COP to decline as seen in Fig. 11.

The follwing dimensionless energy quantities have been calculated:

$Q_{co} = 0.098358$ $\quad$ $Q_{ev} = 0.09385$

$Q_{bo} = 0.04583$ $\quad$ $Q_{ex} = 0.036458$

$Q_{co} + Q_{ex} = 0.13482$ $\quad$ $Q_{ev} + Q_{bo} = 0.13968$

We verify that the global energy balance is satisfied to about 3.5% .

6.7 Influence of the Operating Conditions.

evaporator has a relatively important effect on the system performance since a 5°C decrease of this parameter causes 16-20% improvement of the system cooling COP. The effect of T_c is not as important and decreasing it by 5°C leads to an increase of the system cooling COP by only 5%. Fig. 12 is a plot of the system cooling COP as function of the dimensionless period Π. As expected the curve shows a value of Π for which the performance is optimum. The effect of the thermal capacity of the inert parts of the reactor which is expressed by E_o is studied on the transient first period to minimize the computing time. The results show a very weak decrease in the system cooling COP from 2.00 with E_o=0 to 1.90 with E_o=0.96.

6.8 The Case of Actual Regenerator with Finite Heat Transfer Coefficient.

In actual systems, heat transfer coefficient is finite and the temperature of the solid adsorbent is not equal to that of the fluid. If we assume that mass transfer is infinitely fast (which is a valid assumption in heat transfer controlled adsorption) then w is equal to w_{eq} and the unknowns to be determined are θ_1, θ_2, w and θ. The

$$\theta_{f,1} = \begin{cases} 1 \text{ during desorption} \\ 0 \text{ during adsorption} \end{cases}$$

$$\theta_1^{j+1} = \frac{A\,\theta_1^j + B\,(\theta_{f,1}^{j+1} + \theta_{f,1}^j - \theta_1^j) + E_3\,\varphi\,(w_1^{j+1} - w_1^j)}{A + B}$$

where,

$$A = 1 + E_o + E_1\,(w_1^{j+1} + w_1^j)/2$$

$$B = E_4\,(\Delta\eta)/2$$

For $1 < i \leq (n-1)$

$$A11\;\theta_{i+1}^{j+1} + A12\;\theta_{f,i+1}^{j+1} = C1$$

$$A21\;\theta_{i+1}^{j+1} + A22\;\theta_{f,i+1}^{j+1} = C2$$

where,

$$A11 = 1 + E_o + E_1\,w_P + E_4\,(\Delta\eta)/2$$

$$A12 = -E_4\,(\Delta\eta)/2$$

$$A21 = -E_4\,(\Delta\zeta)/(2E_2)$$

$$A22 = 1 + E_4\,(\Delta\zeta)/(2E_2)$$

$$C1 = E_3\,\varphi\,(w_{i+1}^{j+1} - w_{i+1}^j + w_i^{j+1} - w_i^j)$$

$$C2 = [1- E_4(\Delta\zeta)/(2E_2)]\,(\theta^{j+1}_{f,i} + \theta^{j}_{f,i})$$

$$- [1+ E_4(\Delta\zeta)/(2E_2)]\;\theta^{j+1}_{f,i+1}$$

$$+ E_4(\Delta\zeta)/(2E_2)(\theta^{j+1}_{i} + \theta^{j}_{i+1} + \theta^{j}_{i})$$

The equations governing the pressure and uptake variations are similar to those of the ideal regenerator case.

A computer program was developed to obtain a numerical solution to the above equations. The numerical procedure used is similar in most aspects to the ideal case. The effect of the heat transfer coefficient is analyzed by changing the parameter E_4 for a fixed set of data (the other data are those given in the example of section 6.4). It was in particular verified that by increasing the value of E_4, the solution tends in the limit to the ideal case solution. Table 4 gives the variations of the cooling/heating effects and the system COP's with increasing E_4.

NOMENCLATURE

Abbreviation	Term
A	Area
C	Specific heat
COP	Coefficient of performance
E_i	Dimensioless parameter defined in section 3.2
F	Equilibrium function defined in equation (3b)
G	Absorptivity function defined as (dw/dT)
h	coefficient of heat transfer
I_i	Dimensionless integral defined by equations (17)
l	Dimensional length of the regenerator
L(T)	Latent heat of vaporization at temperature T written in the form $L(T)=L_o + a_L T$
m (or M)	Mass
q_{st}	Isosteric heat of adsorption
p	pressure
P	Perimeter
Q	Heat quantity
R	Ideal gas constant
t	Time
T	Temperature
V	Velocity of the fluid
w	Uptake (mass of adsorbate/Mass of dry adsorbent)
z	Space cordinate along the regenerator

Greek Symbols:

ε	Emissivity or void fraction
Φ	Dimensionless F
Γ	Dimensionless G
η	Dimensionless time
φ	Dimensionless heat of adsorption
λ	Dimensionless latent heat of vaporization
π	Dimensionless pressure
θ	Dimensionless temperature

ρ	Mass density
τ	Period
ζ	Dimensionless space coordinate

Subscripts:

a	"Dry" adsorbent
boi	at the boiler
ad	Adsorption
c	Inert parts of the regenerator or "cold" period
co	Condenser
des	desorbed
ev	evaporator
eq	at equilibrium
exc	at the heat exchanger
f or flu	fluid
h	"hot" period
L	Liquid phase
o	Characteristic value
re	Regeneration
s	Sorbed species or saturation
sen	sensible heat

REFERENCES

1. D.I. Tchernev. In "Zeolites and Clay Minerals as Sorbents and Molecular Sieves", by L.B. Sand and F.A. Mumpton, Academic, N.Y., pp. 479-484 (1979).

2. J-J. Guilleminot, F. Meunier and B. Mischler, Rev. Phys. Ap., **15**, 441, (1980).

3. S.C. Chang, and J.A. Roux, ASME J. Solar Energy Eng., **107**, 189, (1985).

4. D.I. Tchernev, "Closed-Cycle Regenerative Heat-Pump", Paper presented at Desiccant Review Conference, Chattanoga, Tennessee, June (1986).

5. H. Hausen, "Heat Transfer in Counter-flow, Parallel-flow and Cross-flow", McGraw Hill, N.Y., (1983).

6. F.W. Schmidt and A.J. Willmott, "Thermal Energy Storage and Regeneration", McGraw Hill, N.Y., (1981).

7. R.D. Richtmer, "Difference Methods of Initial Value Problems", Morton, N.Y., (1984).

8. A. Hajji, "Thermodynamic of Adsorption Phenomena and Processes with Simulation of Adsorption Cooling Systems", Ph.D. Thesis, IIT Chicago, (1987).

LIST OF TABLES

Table 1 Comparison of the Results Obtained with $\Delta\zeta=1/40$ and $\Delta\zeta=1/60$ ($\Delta\eta=0.25$) .

Table 2 Comparison of the Temperature Profiles at 3 z Positions and the Dimensionless Desorbed Mass for $\Delta\eta=0.025$ and 0.0125 ($\Delta\zeta=1/40$)

Table 3 Effect of Different Parameters on the System Performance. (a) Effect of T_{co}, T_{ev} and T_c , (b)Effect of E_o

Table 4 Effect of Heat Transfer Coefficient on the System Performance

LIST OF FIGURES

Fig. 1 Operating Principle of a Regenerative Cooling/Heating System

Fig. 2 Adsorption Cycle. The Equilibrium Data are for the Pair Zeolite 13X-Water [4]

Fig. 3a Regeneration Process: the Walls of the Container Act as Condenser

Fig. 3b Adsorption Process: the Walls of the Container Act as Evaporator

Fig.4 Elements of the Mathematical Model for the Adsorption Regenerator

Fig. 5 Grid Used for the Explicit Numerical Method. The Initial and Boundary Conditions and the Principl of the Methodare Shown

Fig. 6a Flowchart for the Simulation of a Constant-Volume Process

Fig. 6b Flowchart for the Simulation of a Constant-Pressure Process

Fig. 7a Method of Estimating the Intermediate Values of θ^{j+1} and w^{j+1} on the Iterative Method Shown in the (θ_s,θ) Diagram

Fig. 7b Method of Estimating the Intermediate Values of θ_s^{j+1} on the Iterative Method Shown in the (θ_s,θ) Diagram

Fig. 8 Profiles of the Dimensionless Temperature Versus the Space Coordinate ζ for Different Values of η During the Desorption Process

Fig. 9 Profiles of the Temperature at the Two Ends of the Zeolite Container During One Complete Period

Fig. 10 Dimensionless Heating/Cooling Effect as Functions of the Dimesionless Time (Π=10)

Fig. 11 Variations of the System and Cycle COP's with the Dimesionless Time (Π=10)

Fig. 12 Effect of the Dimensionless Period Π on the System Cooling COP

		$\eta = 0.25$	$\eta = 0.50$	$\eta = 0.75$	$\eta = 1.00$
$\Delta\zeta = 1/40$	θ_s	0.131	0.543	0.791	1.000
	$\theta\ (0.0, \eta)$	1.0000	1.0000	1.0000	1.0000
	$\theta\ (0.1, \eta)$	0.0159	0.0666	0.1524	0.5599
	$\theta\ (0.2, \eta)$	0.0158	0.0639	0.0916	0.1140
	$\theta\ (0.3, \eta)$	0.0158	0.0639	0.0916	0.1135
	$\theta\ (0.4, \eta)$	0.0158	0.0639	0.0916	0.1135
	$\theta\ (0.5, \eta)$	0.0158	0.0639	0.0916	0.1135
	$\theta\ (0.6, \eta)$	0.0158	0.0639	0.0916	0.1135
	$\theta\ (0.8, \eta)$	0.0158	0.0639	0.0916	0.1135
	$\theta\ (0.9, \eta)$	0.0158	0.0639	0.0916	0.1135
	$\theta\ (1.0, \eta)$	0.0158	0.0639	0.0916	0.1135
$\Delta\zeta = 1/60$	θ_s	0.146	0.508	0.825	1.0000
	$\theta\ (0.0, \eta)$	1.0000	1.0000	1.0000	1.0000
	$\theta\ (0.1, \eta)$	0.0181	0.0695	0.1891	0.5116
	$\theta\ (0.2, \eta)$	0.0177	0.0600	0.0955	0.1160
	$\theta\ (0.3, \eta)$	0.0177	0.0599	0.0953	0.1136
	$\theta\ (0.4, \eta)$	0.0177	0.0599	0.0953	0.1136
	$\theta\ (0.5, \eta)$	0.0177	0.0599	0.0953	0.1136
	$\theta\ (0.6, \eta)$	0.0177	0.0599	0.0953	0.1136
	$\theta\ (0.8, \eta)$	0.0177	0.0599	0.0953	0.1136
	$\theta\ (0.9, \eta)$	0.0177	0.0599	0.0953	0.1136
	$\theta\ (1.0, \eta)$	0.0177	0.0599	0.0953	0.1136

Table 4-1 : Comparison of results obtained with $\Delta\zeta = 1/40$ and $\Delta\zeta = 1/60$ ($\Delta\eta = 0.25$)

η	θ (0.1, η)		θ (0.5, η)		θ (1.0, η)		Desorbed mass/M_a	
	Δζ =.025	.0125	Δζ=.025	.0125	Δζ=.025	.0125	Δζ=.025	.0125
0.00	0.0000	0.0000	0.0000	0.0000	0.0000	0.0000	6.143e-4	6.143e-4
0.25	0.0159	0.0159	0.0158	0.0158	0.0158	0.0158	-4.587e-4	-4.587e-4
0.50	0.0666	0.0666	0.0639	0.0639	0.0639	0.0639	5.437e-4	5.437e-4
0.75	0.1524	0.1524	0.0916	0.0916	0.0916	0.0916	2.283e-3	2.283e-3
1.00	0.5599	0.5599	0.1135	0.1135	0.1135	0.1135	3.471e-3	3.471e-3
1.50	1.0081	1.0080	0.0777	0.0912	0.0891	0.0880	0.0124	0.0122
2.00	1.0001	1.0001	0.1494	0.1433	0.1400	0.1471	0.0218	0.0216
2.50	1.0000	1.0000	0.1344	0.1227	0.1021	0.1194	0.0312	0.0310
3.00	1.0000	1.0000	0.1953	0.1924	0.1348	0.1290	0.0406	0.0403
3.50	1.0000	1.0000	0.0045	0.0024	0.0905	0.0843	0.0500	0.0499
4.00	1.0000	1.0000	0.2974	0.3003	0.0789	0.0762	0.0595	0.0593
4.50	1.0000	1.0000	0.6160	0.6150	0.0961	0.0825	0.0688	0.0686
5.00	1.0000	1.0000	0.9941	0.9937	0.1457	0.1403	0.0782	0.0779
5.50	1.0000	1.0000	1.0000	1.0000	0.1438	0.1412	0.0879	0.0876
6.00	1.0000	1.0000	1.0000	1.0000	0.0555	0.0515	0.9720	0.0969
6.50	1.0000	1.0000	1.0000	1.0000	0.1926	0.1957	0.1065	0.1063
7.00	1.0000	1.0000	1.0000	1.0000	0.0350	0.0291	0.1159	0.1156
7.50	1.0000	1.0000	1.0000	1.0000	0.0975	0.0972	0.1261	0.1259
8.00	1.0000	1.0000	1.0000	1.0000	0.3107	0.3161	0.1344	0.1342

Table 4-2 : Comparison of the temperature profiles at 3 ζ positions and the dimensionless desorbed mass for Δη =0.025 and 0.0125. (Δζ =1/40)

T_{co}	T_{ev}	T_c	COP_{cool}	COP_{heat}
300.8	276.3	310.8	2.13	2.17
310.8	276.3	310.8	1.61	1.67
310.8	281.3	310.8	2.05	2.15
305.8	281.3	310.8	2.39	2.48
310.8	281.3	310.8	2.05	2.15
310.8	281.3	315.8	2.03	2.06

(a)

E_o	0.00	0.239	0.478	0.957
COP_{cool}	1.82	1.75	1.69	1.69
COP_{heat}	2.00	1.97	1.92	1.90

(b)

Table 4-3: Effect of different parameters on the system performance (a) Effect of T_{co}, T_{ev} and T_c (b) Effect of E_o

E_4	COP_{cool}	COP_{heat}	$Q_{ev}/(M_oL_o)$	$Q_{co}/(M_oL_o)$
10	0.89	0.92	0.0736	0.0761
10^2	1.43	1.48	.08588	0.0888
10^3	1.87	1.95	0.0922	0.0962
10^4	2.03	2.13	0.0937	0.0984
∞	2.05	2.15	0.0938	0.0986

Table 4-4: Effect of heat transfer coefficient on the system performance

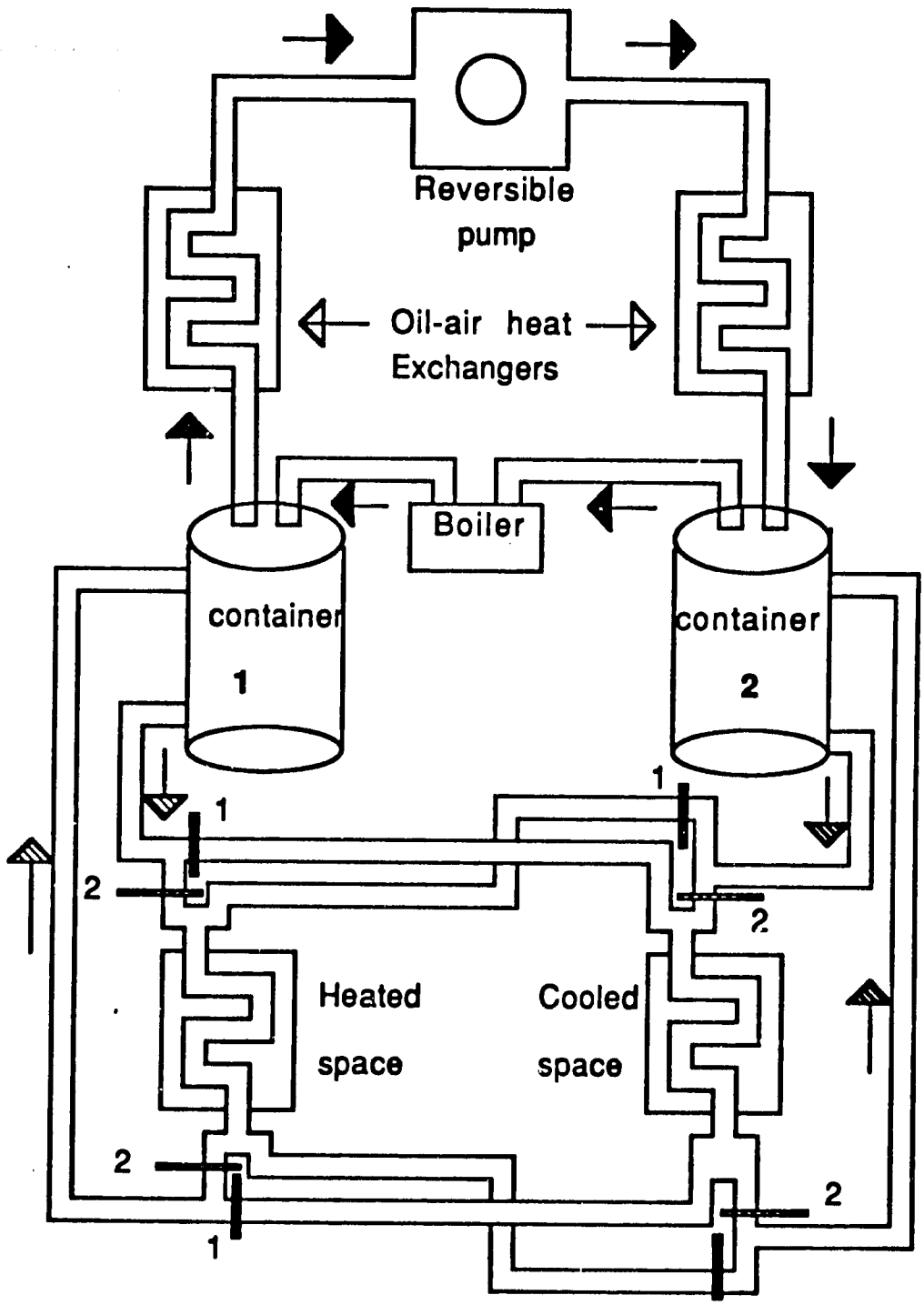

Figure 4-1: Operating principle of a regenerative cooling or heating system: While valces are in position 1 container-1 is desorbing and container-2 adsorbing

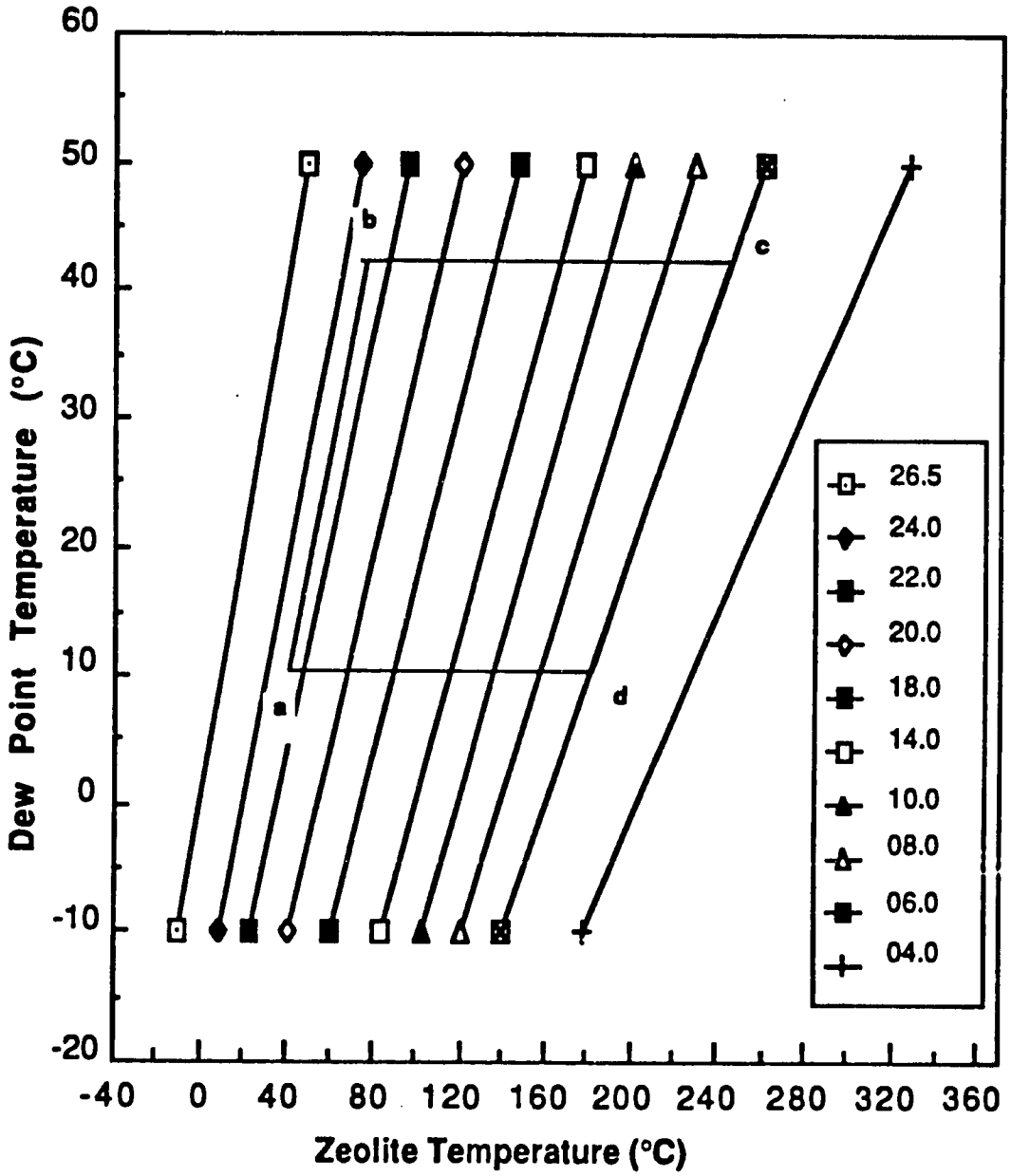

Figure 4-2: Adsorption cycle. The equilibrium data are for the pair Zeolite 13X-Water [4]

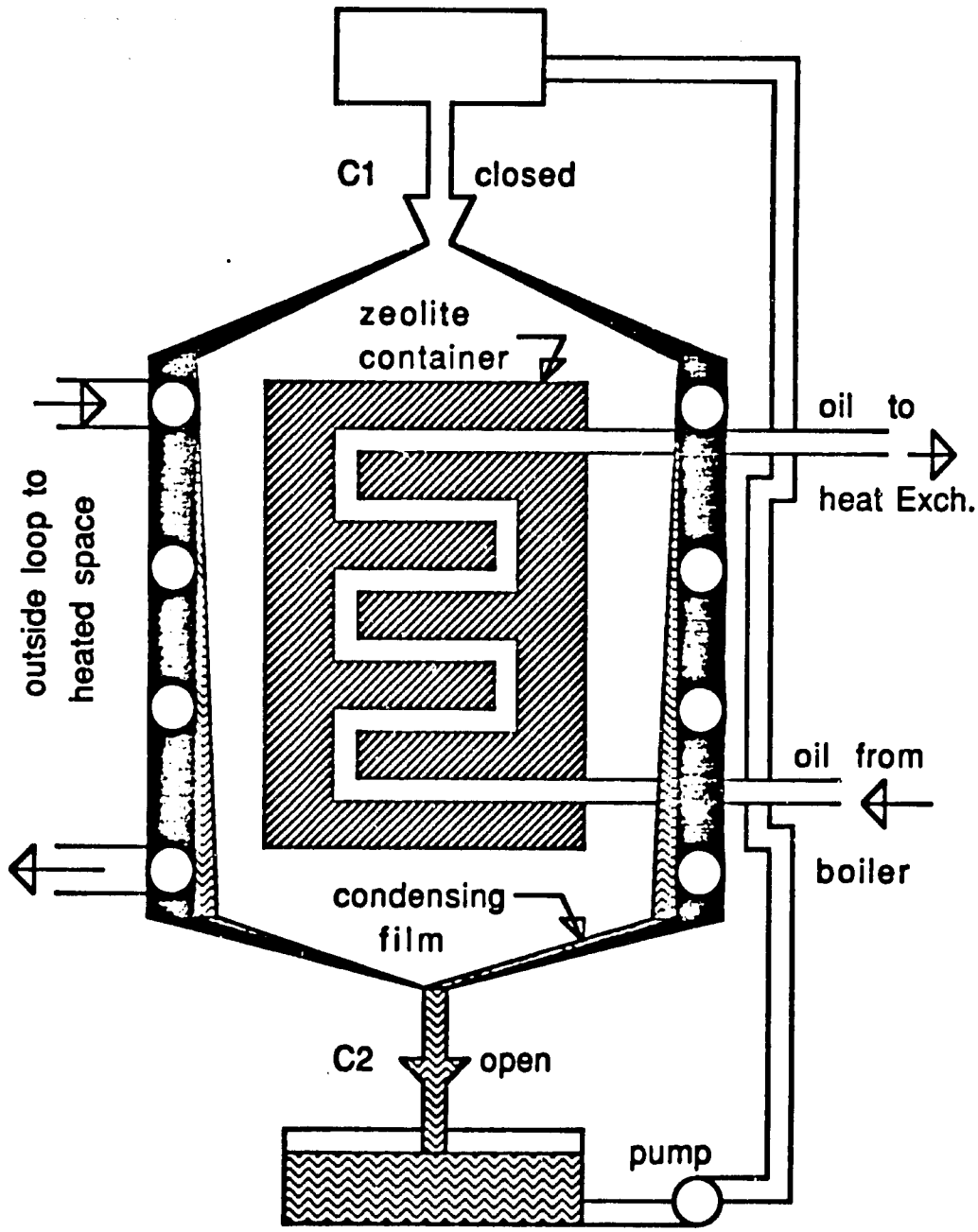

Figure 4-3a : Regeneration phase : The walls of the container act as condenser

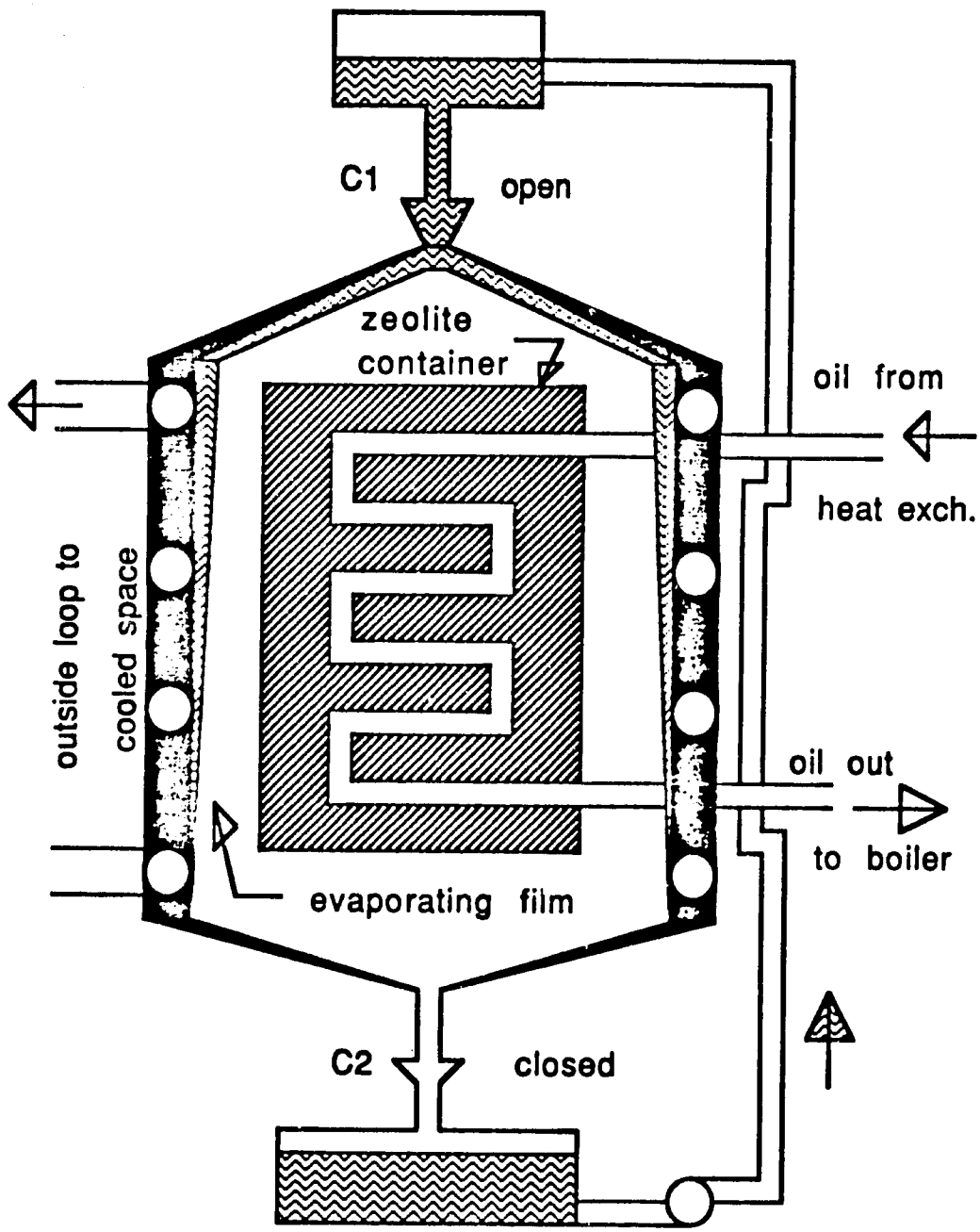

Figure 4-3b : Adsorption phase: The walls of the container act as evaporator

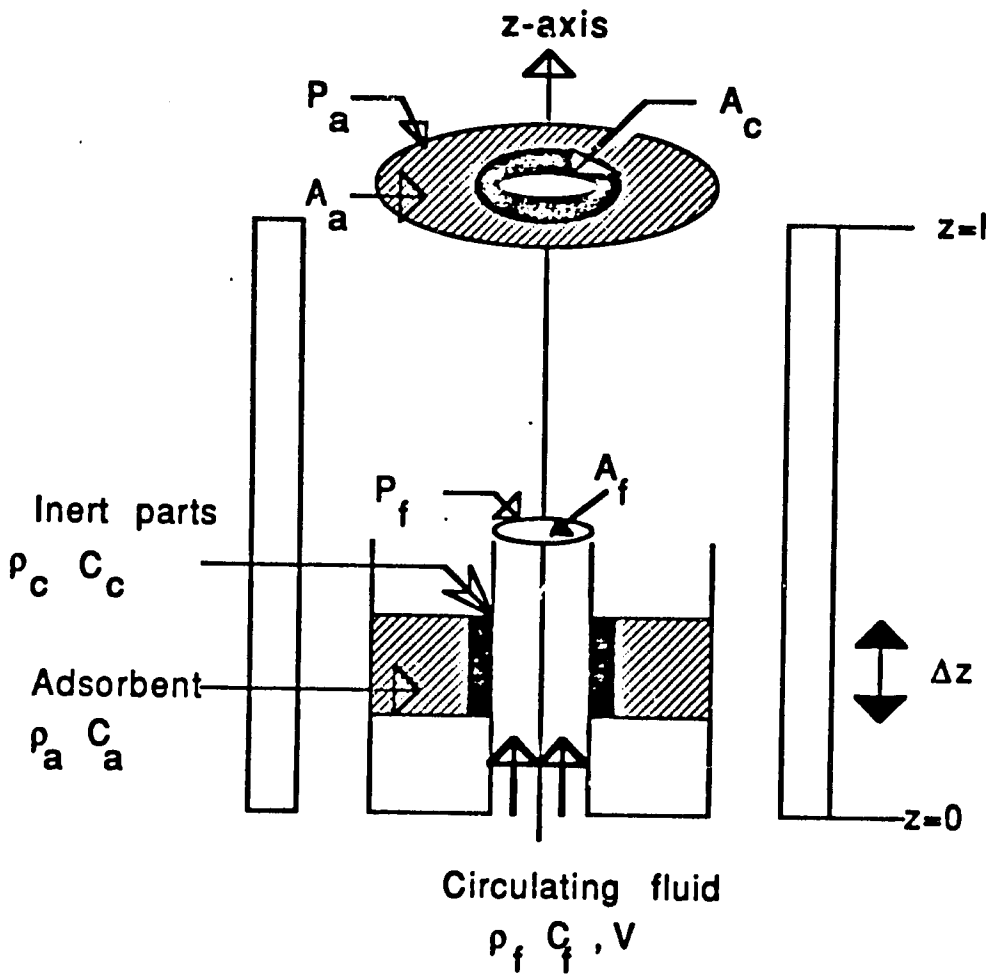

Figure 4-4 : Elements of the mathematical model for the adsorption regenerator

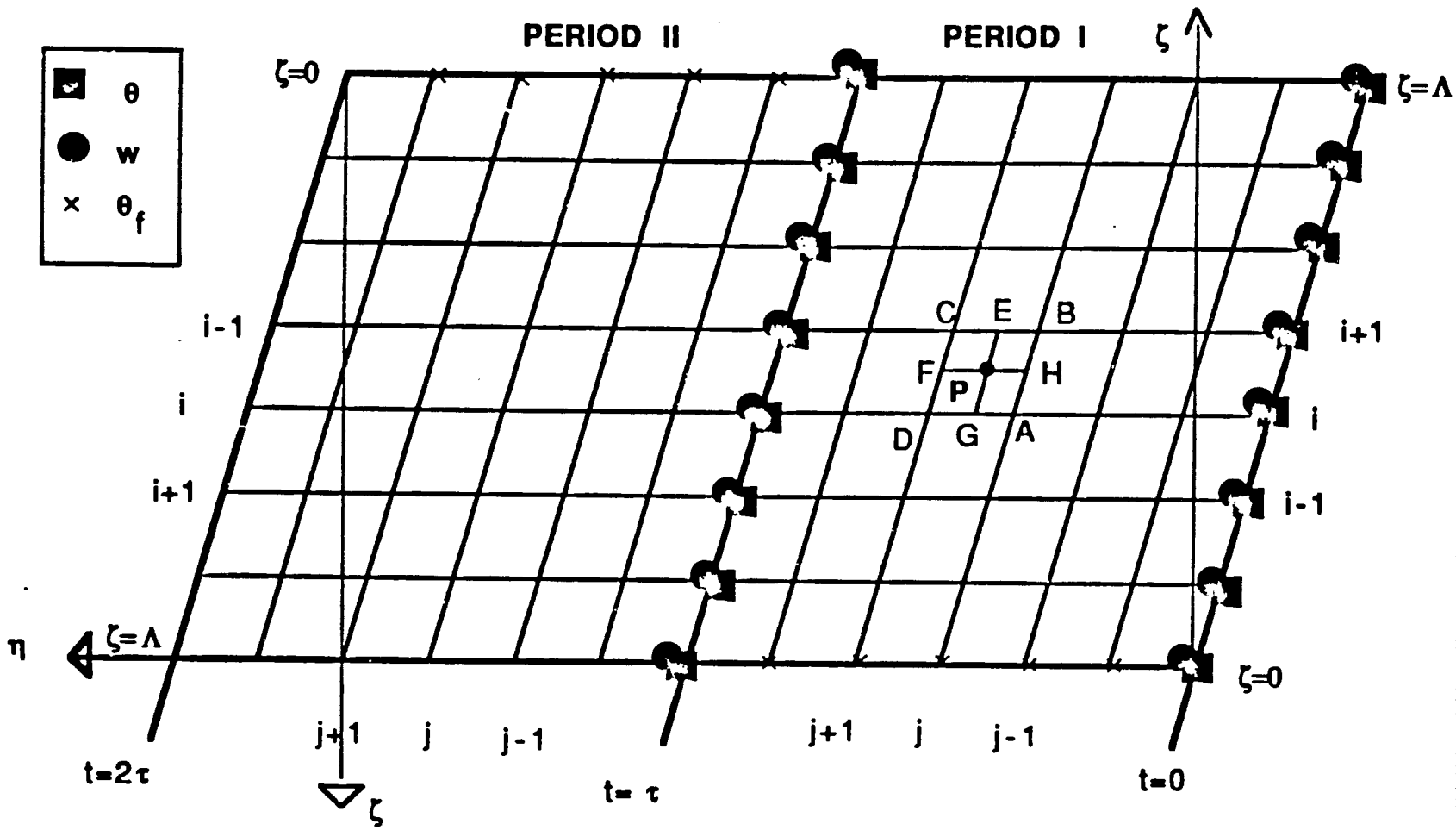

Figure 4-5: Grid used for the explicit numerical method. The initial and boundary conditions and the principle of the method are shown

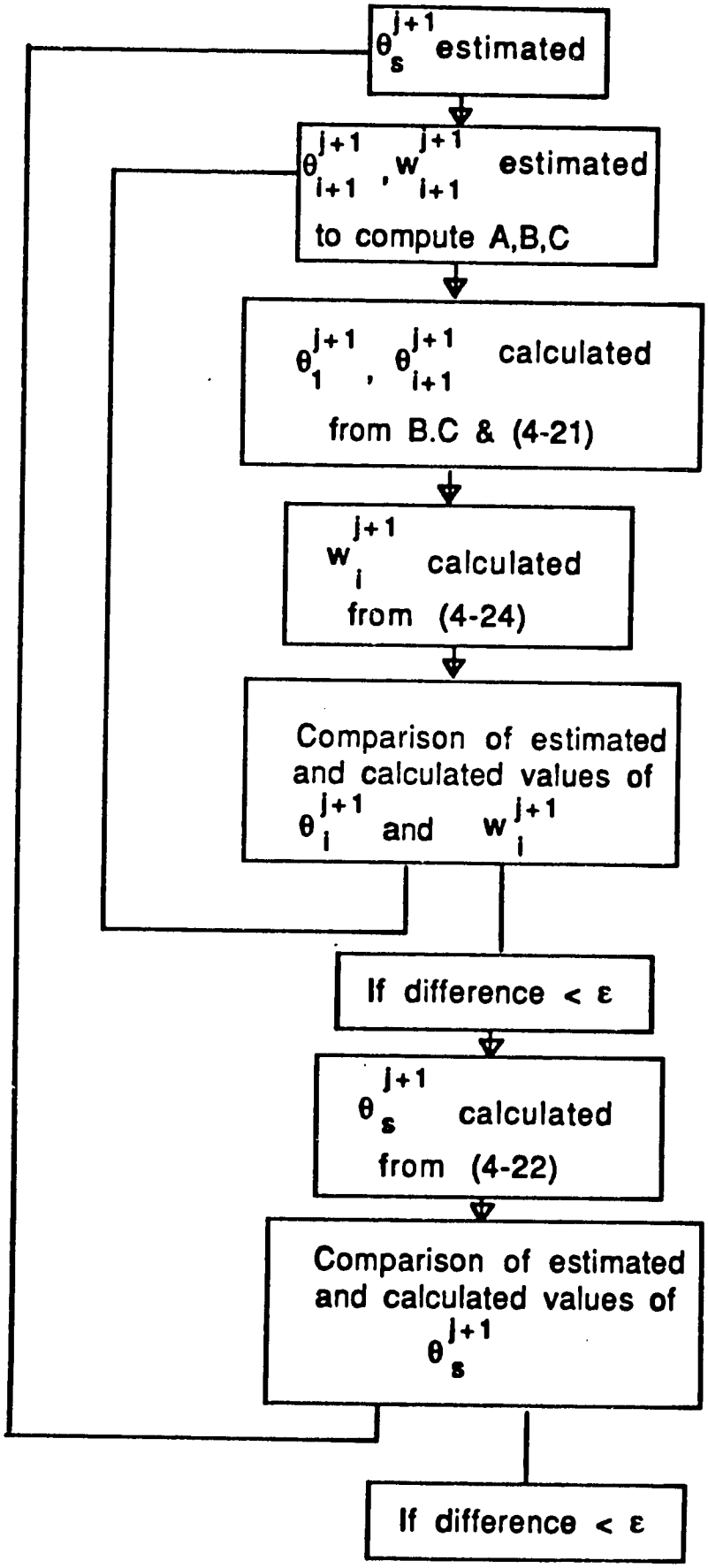

Figure 4-6a: Flow chart for the simulation of a constant-volume phase

Figure 4-6b: Flow chart for the simulation of a constant-pressure phase

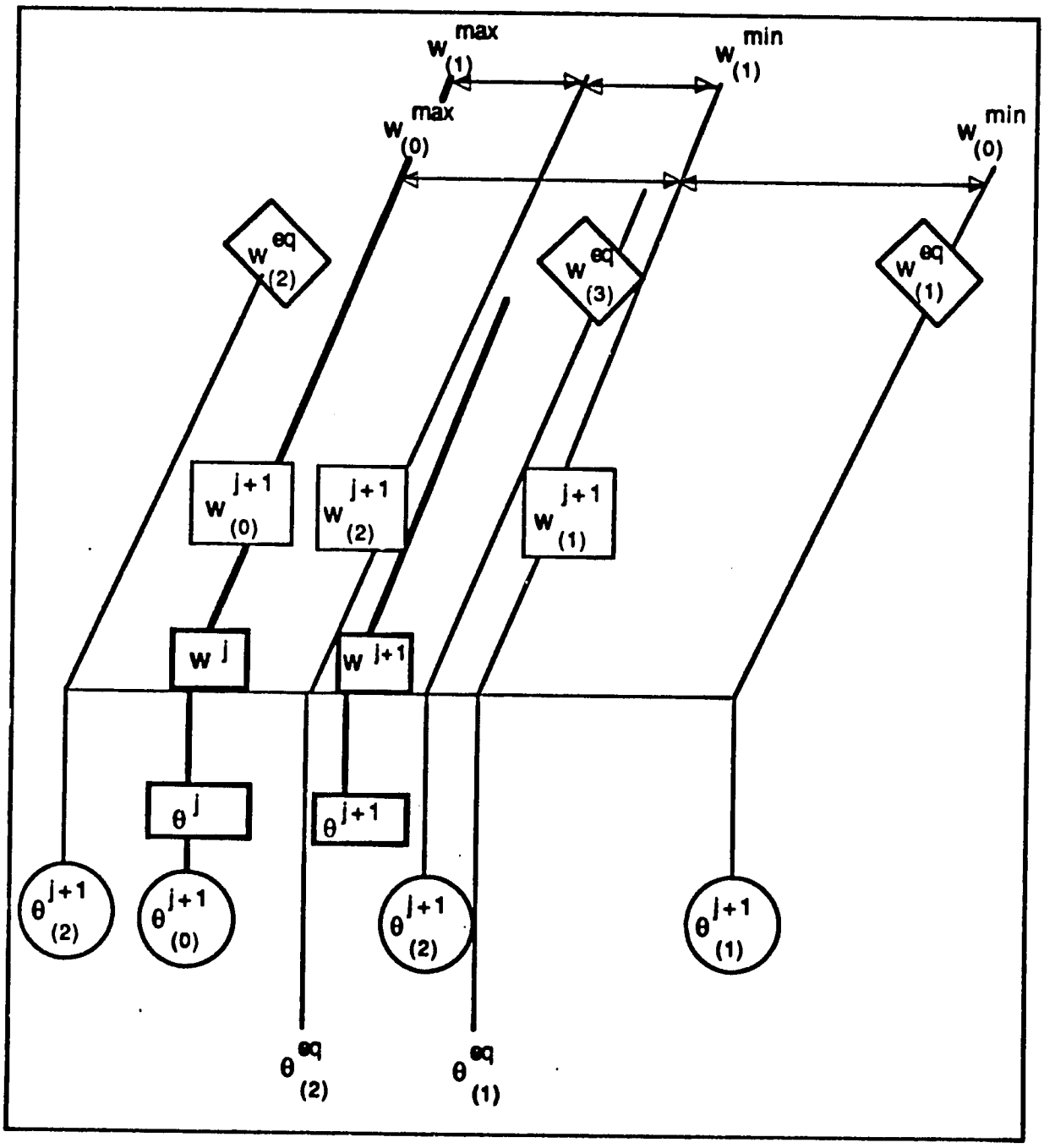

Figure 4-7a: Method of estimating the intermediate values of θ^{j+1} and w^{j+1} in the iterative numerical method shown on the (θ_s , θ) diagram

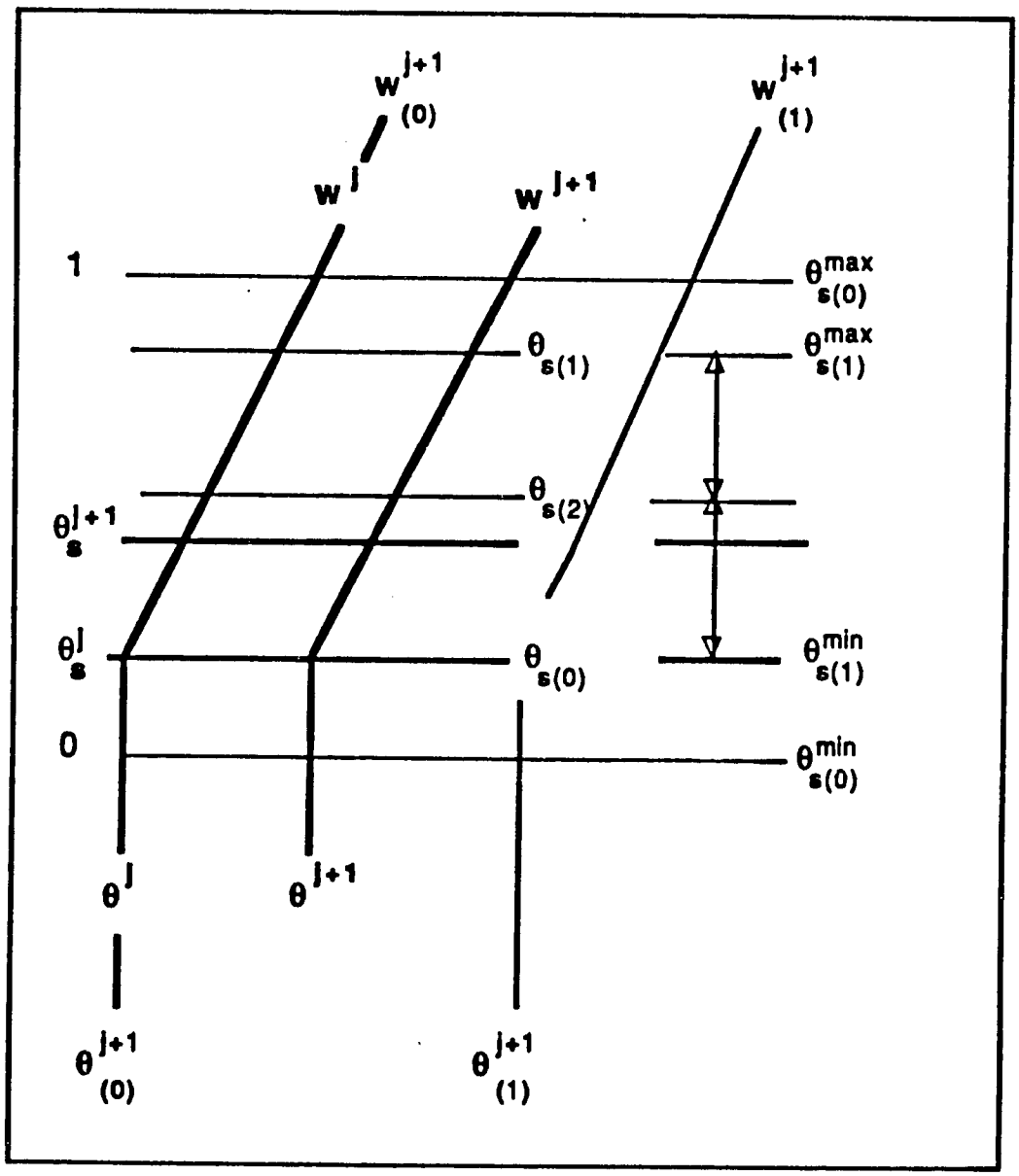

Figure 4-7b: Method of estimating the intermediate values of θ^{j+1}_{s} in the iterative numerical method shown in (θ_s, θ) diagram

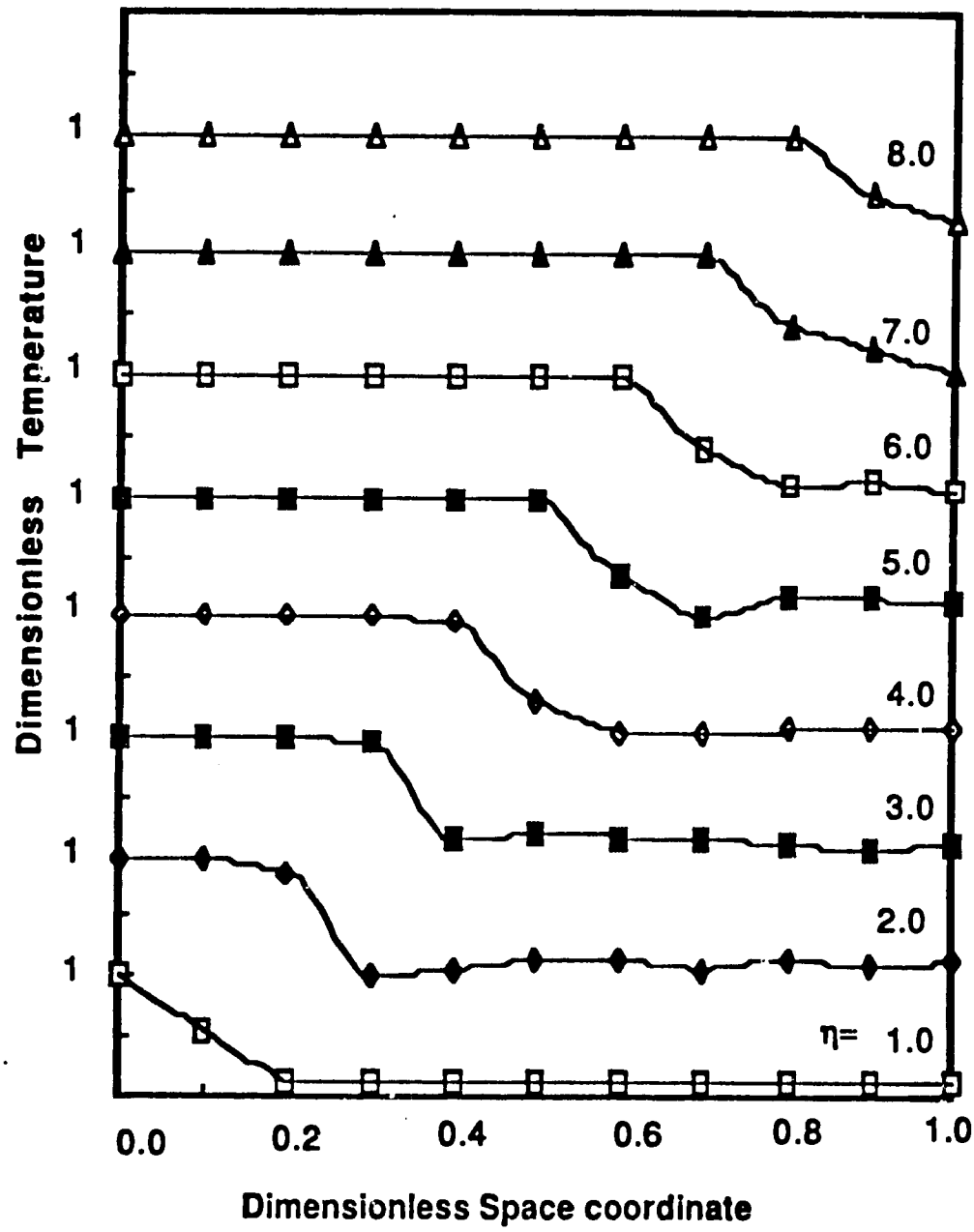

Figure 4-8: Profiles of dimensionless temperature vs space coordinate ζ for different values of η during the transient regime of a desorption phase

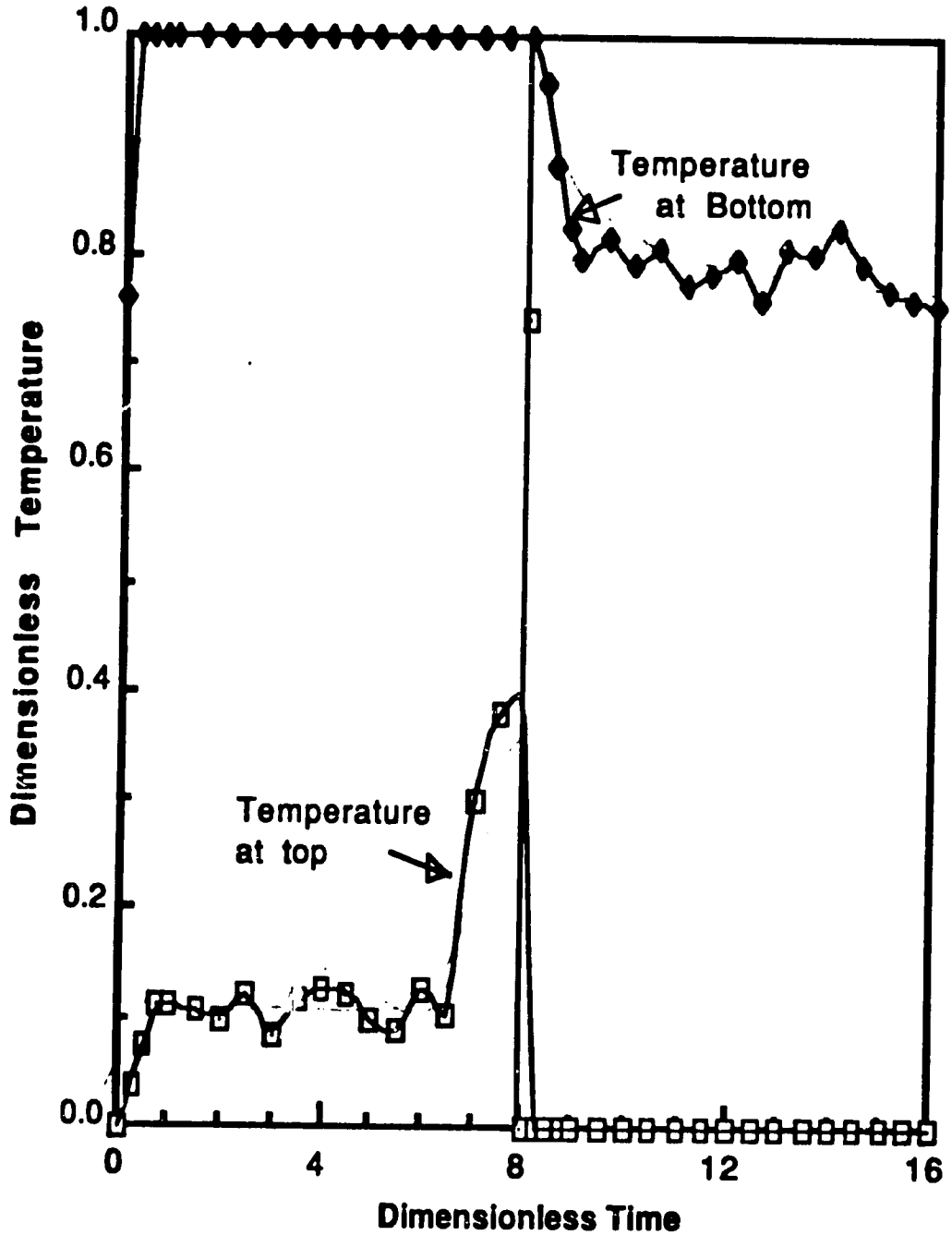

Figure 4-9: Profiles of Temperature at the two ends of each container during one complete period.

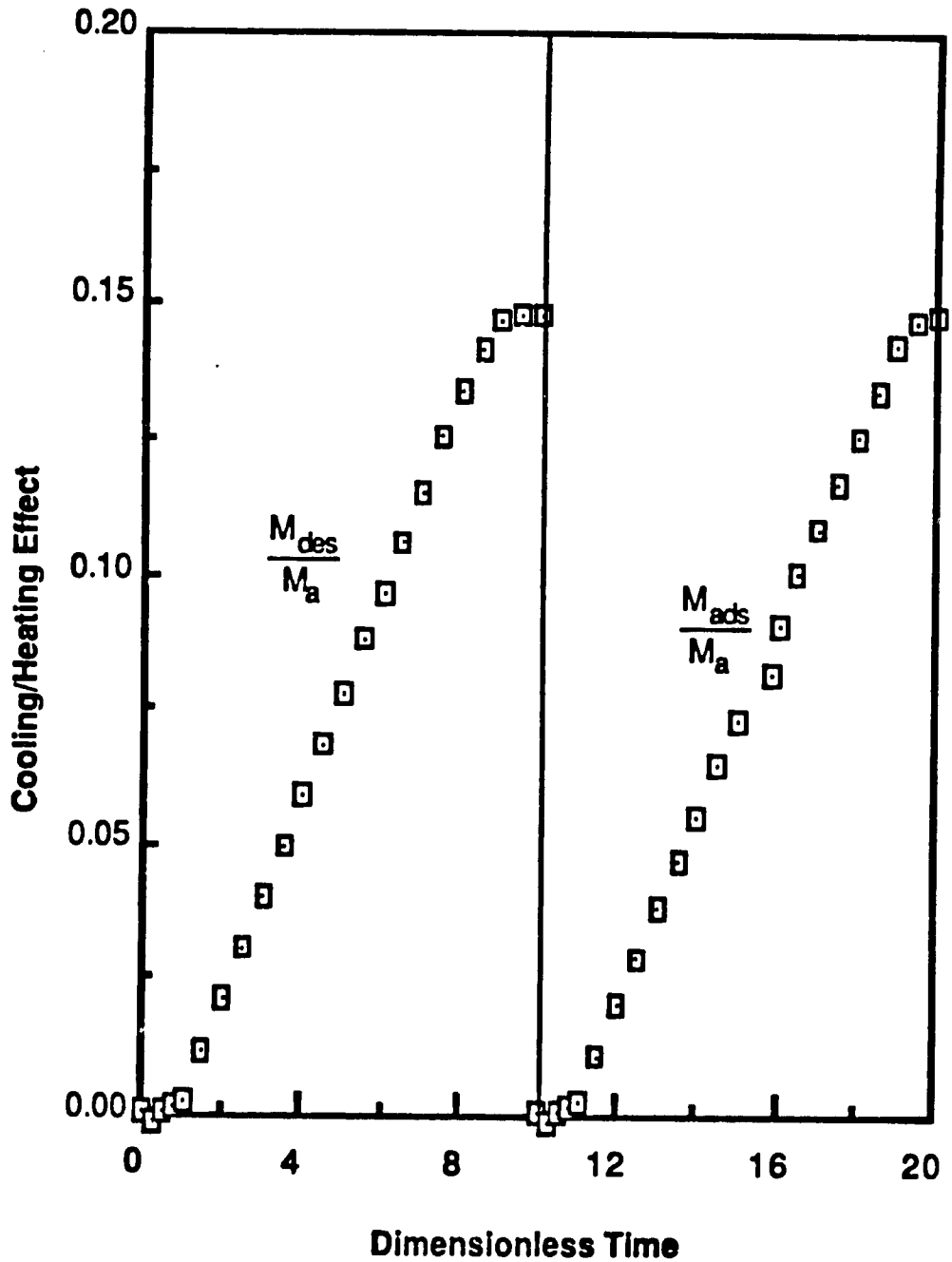

Figure 4-10 : Dimensionless Heating/Cooling Effect as Function of Dimensionless Time ($\Pi = 10$)

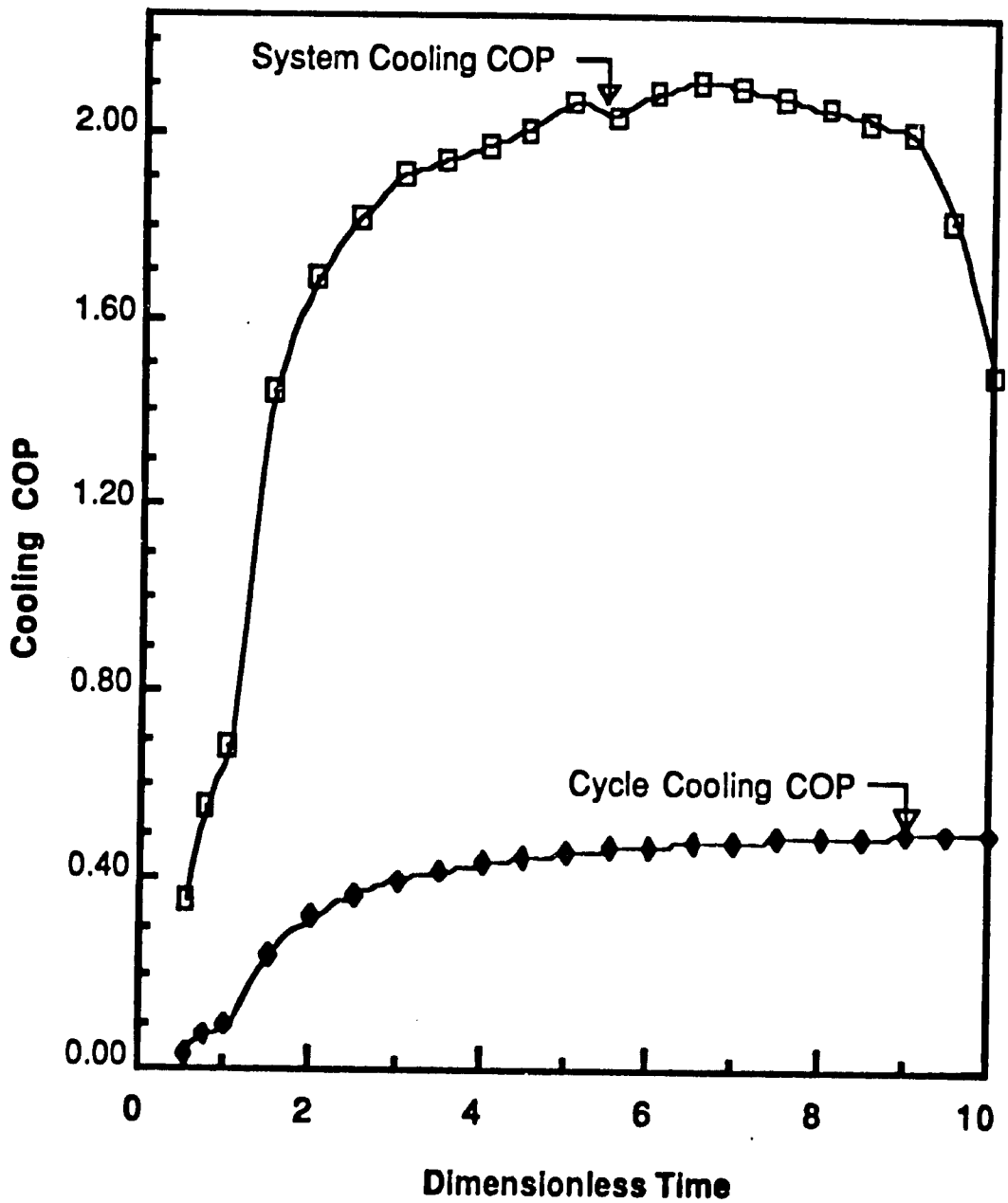

Figure 4-11: Variation of the system and Cycle cooling COP's with dimensionless time (Π = 10)

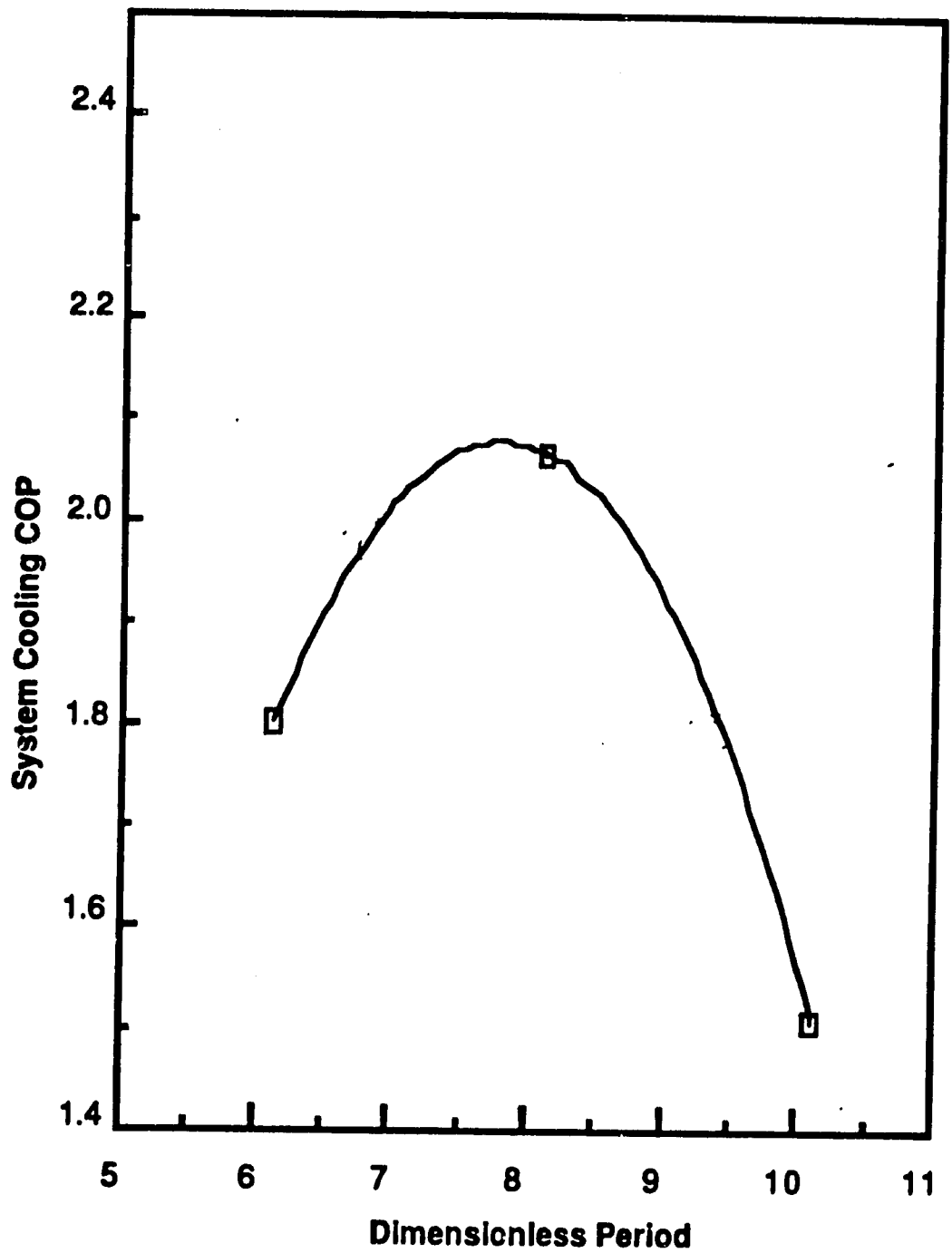

Figure 4-12 : Effect of the dimensionless period π on the system cooling COP