UNITED STATES INTERNATIONAL DEVELOPMENT COOPERATION AGENCY
AGENCY FOR INTERNATIONAL DEVELOPMENT
Washington, D.C. 20523

JAMAICA

PROJECT PAPER

JAMAICA AGRICULTURAL RESEARCH

AID/LAC/P-300

Project Number: 532-0128

AGENCY FOR INTERNATIONAL DEVELOPMENT

PROJECT DATA SHEET

1. TRANSACTION CODE: A (A = Add, C = Change, D = Delete) — Amendment Number: –

DOCUMENT CODE: 3

2. COUNTRY/ENTITY: Jamaica

3. PROJECT NUMBER: 532-0128

4. BUREAU/OFFICE: LAC — 05

5. PROJECT TITLE (maximum 40 characters): Jamaica Agricultural Research Project

6. PROJECT ASSISTANCE COMPLETION DATE (PACD): MM 07 DD 31 YY 93

7. ESTIMATED DATE OF OBLIGATION (Under 'B.' below, enter 1, 2, 3, or 4)
A. Initial FY 86 B. Quarter 4 C. Final FY 91

8. COSTS ($000 OR EQUIVALENT $1 =)

A. FUNDING SOURCE	FIRST FY 86 B. FX	C. L/C	D. Total	LIFE OF PROJECT E. FX	F. L/C	G. Total
AID Appropriated Total	340	160	500	3,606	3,994	7,600
(Grant)	(340)	(160)	(500)	(3,606)	(3,994)	(7,600)
(Loan)	(–)	(–)	(–)	(–)	(–)	(–)
Other U.S. 1.						
Other U.S. 2.						
Host Country	N/A	N/A	N/A	N/A	N/A	N/A
Other Donor(s)	–	–	–	–	–	–
TOTALS	340	160	500	3,606	3,994	7,600

9. SCHEDULE OF AID FUNDING ($000)

A. APPROPRIATION	B. PRIMARY PURPOSE CODE	C. PRIMARY TECH. CODE 1. Grant	2. Loan	D. OBLIGATIONS TO DATE 1. Grant	2. Loan	E. AMOUNT APPROVED THIS ACTION 1. Grant	2. Loan	F. LIFE OF PROJECT 1. Grant	2. Loan
(1) FN	751	968	–	–	–	500	–	7,600	–
(2)									
(3)									
(4)									
TOTALS				–	–	500	–	7,600	–

10. SECONDARY TECHNICAL CODES (maximum 6 codes of 3 positions each): 080

11. SECONDARY PURPOSE CODE

12. SPECIAL CONCERNS CODES (maximum 7 codes of 4 positions each)

A. Code	R/AG	TECH					
B. Amount							

13. PROJECT PURPOSE (maximum 480 characters)

Identify solutions to current constraints to increased production and productivity by carrying out adaptive/applied research in priority commodity areas.

14. SCHEDULED EVALUATIONS
Interim MM YY MM YY — Final MM 05 YY 93

15. SOURCE/ORIGIN OF GOODS AND SERVICES
[X] 000 [ ] 941 [X] Local [ ] Other (Specify)

16. AMENDMENTS/NATURE OF CHANGE PROPOSED (This is page 1 of a ____ page PP Amendment)

Mission Controller has reviewed and concurs with the methods of implementation and financing included herein.

Robert Leonard, Mission Controller

17. APPROVED BY
Signature:
Title: Mission Director
Date Signed: MM 07 DD 18 YY 86

18. DATE DOCUMENT RECEIVED IN AID/W, OR FOR AID/W DOCUMENTS, DATE OF DISTRIBUTION
MM 09 DD 15 YY 86

AID 1330-4 (8-79)

PROJECT AUTHORIZATION

Name of Country: Jamaica

Name of Project: Jamaica Agricultural Research

Number of Project: 532-0128

Pursuant to Section 103 of the Foreign Assistance Act of 1961, as amended, I hereby authorize the Jamaica Agricultural Research Project for Jamaica involving planned obligations of not to exceed Seven Million Six Hundred Thousand United States Dollars (US$7,600,000) in Grant funds over a five year period from the date of authorization, subject to the availability of funds in accordance with the A.I.D. OYB allotment process to help in financing foreign exchange and local currency costs for the project. The planned Life of the Project is seven years from the date of initial obligation.

The Project will establish a Research Advisory Council which will determine priority research areas, develop intermediate range research plans, coordinate research efforts, and promote mutually beneficial cooperation among research, extension, producers, and agro-processors. The Research Advisory Council and its management staff will identify solutions to current constraints to increased production and productivity. The Project will finance research grants and contracts to carry out adaptive/applied research in priority commodity areas.

I hereby authorize the negotiation and execution of the Cooperative Agreement in accordance with A.I.D. regulations and Delegations of Authority subject to the terms and conditions set forth in the Standard Provisions and Schedules attached thereto, together with such other terms and conditions as A.I.D. may deem appropriate.

Clearances:
DDIR:JSchlotthauer
OPDS:PLerner
ARDO:WMcCluskey
ARDO:LVoth
OPEP:MMcLindon
CONT:LTarpeh-Doe
OEEE:CMathews
RLA:TCarter

William R. Joslin
Director

July 25, 1986
Date

AGRICULTURAL RESEARCH PROJECT
(532-0128)

Action Memo
PP Face Sheet
Authorization
Table of Contents
List of Acronyms

I. SUMMARY AND RECOMMENDATIONS

A. Project Summary 1
B. Summary Findings 3
C. Project Paper Design Team 3

II. BACKGROUND, RATIONALE AND STRATEGY

A. Country Setting 4
B. The Problem 6
C. Rationale 8
D. Strategy 9

III. PROJECT DESCRIPTION

A. Goal and Purpose 11
B. End of Project Status 11
C. Project Activities 12

IV. COST ESTIMATES AND FINANCIAL PLAN

A. Overview 17
B. Funding 17
C. Cost Summary 18
D. Methods of Financing 22

V. IMPLEMENTATION ARRANGEMENTS

A. Administrative Arrangements: JADF 23
B. USAID Arrangements
1. Disbursement Procedures 24
2. Procurement Procedures 24
3. Monitoring 24
C. Collaboration with MOA 25
D. Implementation Plan 26
E. Evaluation 27

VI. PROJECT ANALYSES

A. Technical Analysis (Summary) 29
B. Economic Analysis (Summary) 32
C. Institutional Analysis (Summary) 33
D. Environmental Concerns (Summary) 34
E. Social Analysis (Summary) 35

ANNEXES

A. Log Frame Matrix 37
B. Statutory Checklist 40
C. Technical Analysis 49
D. Economic Analysis 77
E. Institutional Analysis 108
F. Environmental Assessment 119
G. Social Analysis 159
H. Scopes of Work for TA 239
I. Other Donor Activities 242

(0254U/0280U/0281U)

ACRONYMS AND TERMS

Agro 21	- A limited liability corporation organization established by the Prime Minister of Jamaica to expedite the development of agriculture.
APD	- Assistant Program Director of the Jamaica Agricultural Research Project.
AVRDC	- Asian Vegetable Research and Development Center.
CARDI	- Caribbean Agriculture Research and Development Institute central office in Trinidad, but represented in Jamaica.
CATIE	- Regional center for tropical agriculture research and training located at Turrialba, Costa Rica.
CBI	- Caribbean Basin Initiative.
CIAT	- International Center for Tropical Agriculture in Colombia.
CIDA	- Canadian International Development Association.
CIMMYT	- International Wheat and Maize Center in Mexico.
CIP	- International Potato Improvement Center in Peru.
COA	- College of Agriculture, Port Antonio.
CRSP	- Collaborative Research Support Program sponsored by AID mainly carried out by consortium of U.S. universities.
EA	- Environmental Assessment
EEC	- European Economic Community.
EPA	- Envrionmental Protection Agency
ESF	- Economic Support Fund.
FAO	- The Food and Agriculture Organization of the United Nations.
GDP	- Gross Domestic Product
GOJ	- Government of Jamaica.

GTZ	- German Technical Assistance Agency.
HC	- Host Country
IARC	- International Agricultural Research Centers (e.g. CIMMYT, CIAT, CIP).
IBRD	- International Bank for Reconstruction and Development (World Bank).
ICRISAT	- International Crops Research Institute for the Semi-Arid Tropics in India.
IDB	- Inter-American Development Bank.
IDRC	- International Development and Research Corporation, a Canadian assistance organization.
IICA	- Inter-American Institute for Science and Agriculture headquartered in San Jose, Costa Rica; also represented in Jamaica.
IITA	- International Institute for Tropical Agriculture in Nigeria; a researcher is currently in Jamaica.
IPM	- Integrated Pest Management
JADF	- Jamaica Agricultural Development Foundation.
JAMA	- Jamaica Agromedical Association
JARP	- Jamaica Agricultural Research Project.
JAS	- Jamaica Agricultural Society.
JNIP	- Jamaica National Investment Promotions Inc., a GOJ corporation.
LD_{50}	- Lethal Dose, Expressed in Milligrams of Pesticide per Kilogram of Body Weight, Required to Kill 50% of the Pest Population
LOP	- Life of Project
MASI	- Multinational Agribusiness Systems, Inc.
MOA	- Ministry of Agriculture.
MOH	- Ministry of Health

NARDI	- National Agricultural Research and Development Institute, proposed GOJ entity.
PD	- Program Director (Research Manager) for the Jamaica Agricultural Research Project.
PID	- Project Identification Paper
PPM	- Parts per Million
RAC	- The Research Advisory Council.
RPAR	- Rebuttable Presumption Against Registration
SCRAD	- Systematic Commodity/Resource Analysis for Development, a process derived from the Hawaii Industry Analysis process.
SRC	- Scientific Research Council - a science coordinating and executing agency of GOJ recently transferred to MOA.
TA	- Technical Assistance.
UNDP	- United Nations Development Programme.
USDA	- United States Department of Agriculture
UWI	- University of the West Indies (Mona Campus).
WHO/FAO	- World Health Organization/Food and Agricultural Organization

I. SUMMARY AND RECOMMENDATIONS

A. Project Summary

There are several institutions and agencies responsible for carrying out agricultural research in Jamaica, however, their efforts are poorly coordinated and lack overall policy guidance and prioritization. In spite of assistance received over the years in the area of agricultural research, the GOJ is doing little to stimulate increased production and productivity, especially by small farmers.

In the short run, and even in the long run, Jamaica will not be able to generate much of the technology needed for agricultural development. It, like other small countries, does not have the tax and population base, nor the level of agricultural production, to develop a full-scale research effort. Building the capacity to incorporate new agricultural technologies must therefore concentrate on the adaptation of technologies from outside sources and collaborative research efforts to generate appropriate new technologies.

The Jamaican Agricultural Research Project is an innovative and experimental approach to developing a system that will bring new technologies into Jamaican agriculture. The program provides a system for technology generation and adoption but does not focus on building up a research or extension system. It is, rather, oriented towards farmer adoption of improved technologies, but begins with assessment of research needs and how to fulfill them as quickly and inexpensively as possible. It represents an integrated process of agricultural technology management.

This project will expand linkages with outside sources of technology and training, particularly the international centers, as well as with other government and private sector groups. It will also explore the appropriateness of collaborative research through commodity networks and other groups. Networks are a much less expensive way of bringing new technologies to farmers. Collaborative research is valuable for a small country because it avoids duplication of research and allows a national program to focus its energies on a reduced number of problems, yet gain the benefits of a larger scale research effort. It is often the only way a small system can provide the "critical mass" of researchers needed in commodity research development.

The program will help develop these linkages, through contracts and grants, to include the exchange of information, collaborative efforts, information visits, training, etc. It will set up a system under which these linkages may develop continuity.

The project is expected to result in a firmly established and functioning research program. In the process of finding solutions to a substantial number of production problems, the capabilities of local researchers will have been enhanced and a constituency for agricultural research will have been built in Jamaica. At the same time, through the use of on farm testing, a significant amount of new technologies resulting from the research will have been disseminated to small and medium size participating farmers.

Financing for this seven year project will be through a $7.6 million grant to the JADF for use by the research program. The grant will be obligated in tranches in accordance with Project needs.

Major Project inputs include:

USE (PROJECT INPUTS)	(US$000)
1. Long Term TA	
- Program Director (80 pm)	762
- Assistant Program Director (76 pm)	503
2. Administrative Support	
- Personnel	170
- Operations	312
- Commodities	160
3. Research	
- Grants/Contracts	4,080
- Short Term TA Support	365
4. Training/Conferences	185
5. Rehabilitation of Facilities	
- Commodities	145
- Construction	120
6. Assessments/Evaluations/Audits	190
7. Miscellaneous	608
	7,600

The Project will be implemented by the management staff of the research program with the policy guidance of the RAC members. The management staff will be contracted by the JADF. Short term TA, as well as research contracts and incidental repairs to the

research stations, will be contracted by the research program management staff. The overseas commodities and equipment required by the JARP (both for use by research program management staff and for the rehabilitation of the research station) will be procured by JADF. Training and conferences will be arranged by the management staff using contracts or placement of individuals.

B. Findings

Based on the analyses contained in Parts IV (Cost Estimates and Financial Plan) and VI (Project Analyses) and in Annexes 2.A-D. of the Project Paper, the project has been determined to be technically, economically, socially and institutionally sound and ready for implementation. An Environmental Assessment has been prepared and appears as Annex F.

The project meets all statutory requirements (see Annex B).

C. Project Paper Design Team

The Jamaica Agricultural Research Project was designed by:

USAID/Jamaica
- Beth Cypser, Project Development Officer
- William McCluskey, Director of the Agriculture and Rural Development Office
- Lee Voth, Agricultural Development Officer
- Mark Nolan, Agricultural Development Specialist
- Robert Leonard, Controller
- Linda Tarpeh-Doe, Financial Analyst
- Michael P. McLindon, Economist
- Charles Mathews, Chief Engineer and Environmental Officer

With the assistance of:
- Dr. Margaret Sarles, AID/W, LAC/DR/RD
- Dr. Kenneth Ratchie, Agricultural Research Consultant
- Dr. Carl Prey, Professor of Agricultural Economics, Rutgers University
- Dr. Carl S. Barfield, Professor of Entomology, University of Florida
- Ms. Carleen Gardener, Social Sciences Consultant

II. BACKGROUND, RATIONALE AND STRATEGY

A. Country Setting

The land area of Jamaica is 11,480 square kilometers (4244 square. miles), equivalent to 1.1 million hectares. The terrain is rugged: only 384 thousand hectares (or 38% of the land area) have slopes less than 10 degrees; while 330 thousand hectares (33%) consist of moderately steep or steep slopes (10 to 30 degrees), and 292 thousand hectares (29%) have slopes greater than 30 degrees. More than half of the island is above 300 meters (1,000 feet) and about 1% lies above 1500 meters (5,000 feet).

There are five broad topographic zones in Jamaica as follows:

-- Blue Mountain Area: The eastern part of the island is dominated by an uplift of metamorphic and sedimentary rocks ranging up to 2,230 m (7,360 feet.) elevation. This is the highest rainfall area as it comes under the influence of the northeast tradewinds.

-- Central-Western Limestone Plateau: Approximately 60% of the land area of the island is derived from limestone which occurs mainly in this plateau ranging up to 1,000 m in elevation. Extreme karst land forms may occur in some areas such as the cockpit country.

-- Central Inliers Areas: Breached areas in the limestone plateau exposing "inliers" or "windows" of highly erodible sediments which are mainly transported volcanic materials. Some of these slopes are cultivated, but are highly erodible.

-- Interior Valley: Comprised mainly of poorly drained alluvial inland valleys which include rather homogeneous areas such as St. Thomas Ye Vale, Queen of Spain's Valley, and the Black River Upper Morass.

-- Coastal Plains: Consist of flat alluvial soils, mainly along the south coast. However, many suffer from water shortage as they occur along the leeward (south) side of the island.

A wide selection of domestic plants and animals of both temperate and tropical origin can be grown in various places throughout Jamaica because of its moderate climate and variation in rainfall, resulting in a variety of microclimates.

Growing temperatures are favorable ranging from a high of 30 - 32 degrees C. during the day to 21 - 24 degrees C. at night. In the hills, temperatures run about 6 - 11 degrees C. cooler; although

cool waves may drop the temperature even lower for brief periods (but not cold enough to freeze). Solar radiation is generally adequate for satisfactory plant growth throughout most of the year except in a few hilly areas prone to extended rainy periods. Day length varies about one and a half hours from June to December which is useful for induction of physiological processes like flowering in plants and estrus in animals. Soils are variable but are mainly calcareous and highly productive when properly managed and supplemented with critical plant nutrients.

The rainfall is quite ample averaging about 1980 mm (77") and ranging from about 890 to 5000+ mm (35 to 200+ ") per annum, though not always well distributed. Some rain generally occurs in every month but the main rainy periods are April/May and September/November. Precipitation is least reliable in the drier south coastal region, but these areas can often be irrigated from both surface water and subsurface water supplies. Irrigation water from surface sources or tubewells is used to increase seasonal production to some degree in areas where rainfall is not sufficient. In other areas, cropping can be extended to all seasons with irrigation.

The total farm area and average farm size have been declining; while the number of farms is increasing. In 1940, there were 149,169 farms covering a total farmed area of 743,572 hectares for an average farm size of 4.[illegible] hectares. By 1978, the number of farms had increased to 183,928 [illegible] the total farmed area decreased to 537,[illegible]5 hectares for an average farm size of 2.9 hectares. About 43% of this area, and 99 percent of all farms, was in medium and small farms under 40 hectares.

Approximately 50% of the nation's population [illegible]s in rural areas, and 32.5% of the employed labor force works in the agricultural sector. The average age of farmers is over 50 years, but recently, younger persons have been entering this field on account of high unemployment (in 1985 about 25%). Per capita income for the agricultural sector has remained low, being only a third to a half that for other sectors of the economy.

The decline in cultivated farm lands has affected both domestic and export crops. For example, the area devoted to grassland, which occupied 287,000 hectares in 1958, had declined by 47% to 152,000 hectares in 1980. The areas planted in export crops (including sugarcane, coconuts, bananas, cacao, and citrus) also declined in the 1970's, but this trend has been reversed during the past two years. Meanwhile, substantial increases occurred in staple food crops like root crops, plantains, vegetables, condiments, pulses and cereals.

BEST AVAILABLE

The Government of Jamaica is taking some bold steps to accelerate the development of the agriculture sector. The aim is to greatly expand production, processing and marketing. This involves instituting an enlightened agricultural policy inviting international entrepreneurs to establish production enterprises in Jamaica for both domestic needs and export. Significant tax and credit advantages accrue during the early stages of development. A second important step is to both access market potentials and then aggressively seek those markets for Jamaican producers. Agro 21, a quasi-governmental agency, was established to seek new markets, serve as an "honest broker" for new enterprises, and find users for about 80,000 hectares of unused and underutilized productive lands. A key to the expanded success of these new developments must be effective adaptive/applied agricultural research.

However, the GOJ is doing little to stimulate improved and increased production and productivity of crops produced by small farmers. This is despite the fact that these farmers are responsible for more than 80% of the food produced on the island. While in general, smaller farm plots have been more productive than large landholdings, many of the chemical, mechanical and biological improvements in technology have not been tested and disseminated among these rural poor. They have little influence over setting agricultural research objectives or national agricultural policy. Without adaptive/applied research focused on the identification and solution of production constraints, it is not reasonable to expect that they will be able to significantly increase production.

B. The Problem

There are several institutions and agencies responsible for carrying out agricultural research in Jamaica. However, the efforts of these different entities are fragmented, not focused on priority problems, and not coordinated with each other or with relevant external programs. This situation is exacerbated by the current GOJ budgetary situation, as necessary financial support is inadequate to carry out adaptive/applied field research trials. In addition, part of the problem lies in the large number of external donor agencies supporting various aspects of research depending on their own interests and interpretations of the need, but without considering the overall problem and activities of other agencies.

The sheer size of the research establishment (including the MOA, UWI, commodity boards, and others), is adequate for a country several times larger than Jamaica. However, in the attempt to cover as many commodities or research areas as possible, there is

BEST AVAILABLE

an inability to approach any single problem in sufficient depth to achieve meaningful progress, establish priorities, and a lack of incentives to focus on relevant areas with good potential for rapid improvement. These difficulties are only exacerbated when budgets are tightened.

The GOJ has received research related assistance from the IDB, IICA, FAO, IDRC, CARDI, and to a lesser extent other donor agencies. Several of these externally funded projects to strengthen institutional capacity have developed experiment station facilities and provided technical assistance, but have failed to stimulate any sustained or effective institutionalized research programs. Research remains highly fragmented and of low priority as an overall activity and its importance and support continues to deteriorate.

Several recent studies and reviews have examined the national research establishment and made various recommendations. These assessments have identified major constraints to achieving program objectives in the research subsector, including the following:

-- There is a lack of coordination among the public, quasi-public, and private sector entities involved in research. Efforts are much too fragmented among diverse agencies, with little attempt at collaboration, consolidation, or allocation of responsibilities.

-- There is a lack of clearly defined policies, priorities, targets, operational objectives, and lack of accountability and reports. There is therefore difficulty in prioritization and a lack of incentive to focus on relevant areas with good potential for rapid improvement. As a result, there is an attempt to cover too many discipline specific research areas and the inability to approach single commodity problems in sufficient depth to achieve meaningful progress.

-- There are very weak linkages between research, extension, and farmers. Therefore, any relevant applied/adaptive research results are not easily disseminated to the farmers, resulting in little impact on productivity and efficiency.

-- There are severe constraints on the level of commitment of the GOJ due to the current budgetary squeeze. This reduced budgetary support has exacerbated the difficulties outlined above and caused trained staff to leave for lack of adequate compensation and opportunities to do research.

BEST AVAILABLE

C. Rationale

Jamaica is highly favored for expanded agricultural enterprises spanning both temperate and tropical commodities. Improving agricultural research is a key element in increasing the productivity and income of the rural poor. Where land resources are limited, farmers must rely on increasing production through more intensive farming of land already under cultivation and the development of environmentally sound techniques for farming marginal lands. Farmers in Jamaica must also respond to changing world trade conditions, such as the decline in sugar prices, by learning to cultivate new crops. These changes in the structure of agriculture require new technologies and new practices appropriate for the small farm sector.

Imports of food, most of which can be grown locally, have reached alarming proportions. Food and feed imports account for nearly half of the total national food bill. Considering that there are certain products like wheat, and other cool weather cereal products, some livestock feed ingredients, "secondary" meat products, and certain seed/planting stocks that are either impractical or not economical to produce, it is still possible to reduce imports by 50 percent within the next ten years. This would represent a foreign exchange savings of US$160-175 million at current import levels. Concurrently, it should be possible to increase exports of excess production, and particularly of non-traditional and ethnic commodities, to earn an additional US$100-150 million in hard currency.

The goal of USAID/J's program in the agricultural sector is to increase agricultural production, rural income, and employment through the promotion of diversified cropping systems that will contribute to foreign exchange earnings and savings. Among the constraints inhibiting attainment of this goal is the current status of productive technology in Jamaica. Low production and low productivity are in great part a direct result of out-of-date production technologies. This can be directly linked to the inadequate national research efforts which are underfunded, poorly coordinated and administered, and weakly linked to extension.

Similar conditions in other countries have led to AID support of autonomous and semi-private research programs. In the Dominican Republic, there is a new project to support an agricultural research program as an autonomous institute, with considerable freedom from standard government personnel practices. In Honduras, AID is financing a private foundation which will have more expertise, money and experience than the government's own research program. Ecuador is studying the feasibility of developing an agricultural research foundation patterned after the Honduras project.

Well focused and vigorous technology generation or adaptive research is the key to further developing this sector of the economy. This technology adaptation will contribute to increased employment and rural income, to attaining national food security, and increasing foreign exchange earnings and savings by increasing exports and reducing imports. Because of the potential impact of increased productivity and production in both the traditional and non-traditional crop sectors, this project in addition will support the goals of other projects in the USAID/J portfolio.

D. The Strategy

The agricultural research situation in Jamaica is critical and conditions are ripe for developing an overall strategy of support for agricultural research which is outside the national budget and traditional institutions. Mechanisms are needed whereby operational support for applied/adaptive field research could be provided, through grants or other means, to national government and non-government entities and individuals. These mechanisms should not represent a national budgetary add-on, nor require institutional support from government agencies, and should incorporate farmers into the research process.

A review of agriculture in Jamaica reveals that a vast amount of readily introducible technology remains unexploited, that validation of technology must be done at the farmer level, and that purchased inputs could be substantially reduced by appropriate cultural practices and animal husbandry. To address the issues outlined in Section B above, it has been determined that a project should have the following features:

-- Adequate, long term support which would provide resources (including technical assistance) for priority research;

-- The means to attract and sustain collaboration with other applied/adaptive research and extension agencies involved in the same commodities/problem areas, both national and international, including the IARCs;

-- Activities to improve the capacity of local researchers, principally through non-degree, short-term, and in service training, both within country and abroad; and

-- Production inputs necessary to conduct field trials and experiments on GOJ stations, on estate farms and in farmer's fields. The latter should allow the possibility of introducing an innovative procedure for "self-replicating" farmer's trials and experiments.

The strategy is to establish a research program under the guidance of a Research Advisory Council (RAC) that will have the technical and financial capability and authority to:

(1) make grants to public and private individuals, organizations, national and international institutions, private farmers, commodity boards and other agencies to conduct specific, applied agricultural research projects and on-farm trials that meet priority criteria;

(2) use contracts to directly support on-station and/or on-farm research projects in selected commodities;

(3) provide funds for establishing scientific interchange between selected local researchers and recognized scientific authorities in the commodities of interest; and

(4) provide funding for specific training of selected researchers at recognized national and international research centers.

Considering the current state of GOJ finances and budgetary constraints, the research program will be organized as an autonomous body with appropriate linkages to farmers, MOA, UWI, COA, statutory boards (when applicable), agribusiness, agriculture banks, and international and regional institutions. However, the Program Director (PD) must have day to day control over the program's resources, observing of course, the administrative and financial guidelines set by the JADF Board for this project and the policy and priority guidelines set by the RAC.

III. PROJECT DESCRIPTION

A. Project Goal and Purpose

The Project goal is to increase agricultural production through improved crop and livestock productivity, thereby increasing rural income, decreasing dependence on food imports, and increasing foreign exchange availability. The Project purpose is to identify solutions to current constraints to increased production and productivity by carrying out adaptive/applied research in priority commodity areas. The Project purpose will be accomplished by establishing an autonomous Research Advisory Council which will determine policy and identify priority problems, and fund research directed at resolving the problems through grants and/or contracts. The JARP will promote cooperation among researchers, producers, extension and other agricultural support groups.

B. End of Project Status

At the end of the Project it is expected that the research program will have been firmly established, and be in a position to coordinate and fund adaptive/applied research projects. The solutions to a substantial number of current production problems will be identified as a result of adaptive/applied research trials, and validated through extensive on-farm testing. The capabilities of local researchers will be enhanced, and an increased appreciation for the role of research will be developed among producers and policy makers. The focus of agricultural research will be on its relevance to farmers' needs in relation to increasing agricultural production for both efficient import substitution and export. The Project will thus have built a constituency for applied/adaptive research both through demonstrating to producers the value of such research to solve current constraints as well as through the efforts of the RAC members. This constituency building aspect should provide impetus for increased GOJ support following economic recovery, while concurrently, the grant mechanism as delineated will be able to benefit from other donors. In this way, the Project can be viewed as a 'reverse' institution building effort: by demonstrating that this systematic approach to research works, the Project will not only strengthen the research system in Jamaica, but stimulate financial support of both public and private aspects of the research system on a more regular basis as well.

C. Project Activities

The research program will be established, with guidance provided by the RAC, under the aegis of the Jamaican Agricultural Development Foundation (JADF), a tax-free, autonomous, non-profit organization. The research program will report to the JADF Board with respect to financial and administrative matters and coordinate its need for support services with the existing structure of JADF; however, the research program will be responsive to the RAC with respect to research priorities, the recruitment of personnel, and the implementation of its mandate. The research program will be administered through contracts and grants to firms, agencies, and individuals. The research program will be able to receive funding from other sources, including the GOJ, national and international donor agencies, commodity boards, the private agribusiness sector, farmer groups, etc.

The RAC will be made up of representatives from (1) farmers and farmers groups; (2) domestic and export marketing; (3) credit and finance; (4) agro industry; (5) agro business; (6) agricultural education; (7) agriculture research (MOA); (8) Agro 21; and others relevant to specific priority needs. Specific membership will be recommended by a Selection Committee made up of individuals jointly identified by JADF and USAID.

The RAC will have the responsibility and authority to:

(1) Develop policies for making grants to, and as necessary contracts with, public and private individuals, organizations, national and international institutions, private farmers, commodity boards and other agencies to conduct specific adaptive/applied agricultural research projects and farm trials aimed at resolving constraints and increased production of priority commodities;

(2) Develop criteria for providing funds to establish scientific interchange between selected local researchers and recognized scientific authorities in the commodities of interest, and

(3) Develop criteria for providing funds for specific short term training of selected researchers at recognized national and international research centers.

The RAC will be under the direction of a chairperson. The RAC Executive Committee will be composed of selected members of the RAC and will provide advice and counsel to the research program management staff, specifically the PD, who will have direct responsibility for the execution of the JARP.

Research management will consist of a Program Director and an Assistant Program Director of Research, an administrative/financial assistant and support staff. Perhaps more than any other single factor, the capability of the PD will determine the success of the project. The PD should have a Ph.D. degree or equivalent in crop sciences, experience in the tropics, experience in research administration, and the breadth of vision and personal leadership skills to develop, in collaboration with an advisory group, research priorities and to enforce those priorities. He should be respected by the international agricultural community, and be recruited from a worldwide perspective. The APD should have a similar, but perhaps less extensive, background, and may have been trained in either crop or animal sciences. (See Appendix H.)

The principal duties of the PD and APD include:

-- Overall responsibility for program management;

-- Establish and enforce research priorities of the program with approval of the RAC;

-- Prepare an annual report, yearly workplan and budget, approved by the RAC and the JADF Board;

-- Organize meetings of the RAC and the RAC Executive Committee; present grants and contract proposals to the latter;

-- Develop linkages with outside sources of technology, including IARCs, regional and national centers, and private sector groups, as well as government agencies, donor agencies, and other groups;

-- Oversee the development of appropriate contracts and grants; and

-- Encourage development of additional sources of funding.

Although the research program will have the freedom to expand its activities, funding under this project will focus on the following.

Research Grants: The project will provide grant support to individuals and groups from public or private organizations that are identified as having the capability and motivation to design and implement a relevant research project or experiment within the priority areas, in coordination with the PD and the RAC Executive Committee. As detailed below, assistance for research design and methodology will be available from short term commodity specialists who will also be available to provide periodic technical backstopping during implementation.

The individual, group, or organization will submit research project proposals to the PD. Each project will be reviewed and submitted to the RAC Executive Committee with recommendations as to how it relates to the farmers' needs. Criteria for selection of specific commodities for concentrated research will ensure relevance to the priority needs of small farmers and Jamaica's new thrust to expand non-traditional crops. Included in the criteria will be a provision for trials to be conducted on farmers' fields.

The RAC Executive Committee will review the proposal and provide advice to the PD on its relevance to established policies, priorities, and goals and their recommendations. Once approved by the PD, a project would be funded for a specific period of time (1-3 years), but with the funding subject to the satisfaction of specific performance criteria on an annual basis. Particular emphasis will be given to the need of carrying out testing on farmers' fields.

The recipients of the research grants will submit progress reports and a final report to the PD at specified times. The final report must include both a statistical analysis and economic analysis. Evaluations will give most weight to the effect the project has had on increasing production and productivity in on-farm trials. Those researchers that demonstrate the capability of successfully carrying out research projects to completion will be considered for additional funding for project extension if justified and/or for new projects. It is expected that emphasis and priority will be given to on-farm introduction and testing of improved germ plasm and cultural practices.

Grants will be expected to include funding for inputs, field labor, equipment, and where necessary, limited transportation, but professional staff salaries generally should be provided by cooperating institutions.

Short term commodity specialists will assist the PD and the APD in the areas of their technical specialties. Responsibility for procuring these short term commodity specialists will be delegated to the PD under technical assistance contracts; they will primarily be responsible to assist grant applicants with respect to research design and methodology both in the preparation and implementation of their proposals. These could be provided through buy-ins with IARCs or through other mechanisms. The PD and APD will be responsible for following up on the work initiated by these commodity specialists, who will continue to be available on a periodic basis to provide technical backstopping during implementation of the research proposal as needed.

<u>Contract Research</u>: Multi-year adaptive research projects on key priority commodities such as root crops, legumes, and cereals

would be contracted through an appropriate non-governmental agency or PVO with close links to national research stations, especially Bodles. Existing entities that might serve as contractors include IICA, CARDI, CRSPs, or one of several external agencies. The contractors would agree to bring on one or two young Jamaican researchers as part of their research team.

These contracted research projects will operate under the overall direction of a well qualified contractor, will be closely linked to an appropriate entity, such as an IARC, and will not undertake the more sophisticated aspects of biological research. Therefore, higher degree training may not be essential. However, it will be necessary to provide short term training for these young researchers mainly at appropriate IARCs (especially CIMMYT and CIAT), CRSP programs, or other recognized centers of excellence.

The first step would involve selecting one or two well qualified and motivated young researchers (e.g. recent graduates of UWI) for 3 - 6 months of training at one of the IARCs or other centers of excellence. Concurrently, the contractor should negotiate with a senior IARC or other center staffer for a short term assignment (e.g. 2 - 4 months) coinciding with the return of the trainees.

The field work would be started on the return of the trainees. Headquarters may be established at Bodles or other acceptable sites where the new technology and germ plasm introductions will be tried first. However, most of the trials and 70 to 90 percent of the program will be carried out in farmer's fields. Thus, major emphasis will be given to validating, adapting and fine tuning introduced technology.

A concerted effort will be made to have the visiting IARC specialists conduct workshops or seminars at UWI, COA, or with other appropriate groups during their time in Jamaica. Some of these workshops or seminars will be for the benefit of the faculties and other relevant researchers while some will be specifically to enhance the educational development of students. A minimum of 60 percent of the visiting specialists will be so involved. Developing such workshops and seminars will both strengthen the knowledge base and understanding of Jamaica by the specialists as well as strengthen the capability of the host country researchers, faculty, and students. It is conceivable that long term linkages could also result between the Jamaican institutions and the specialist and his institution.

Scientific Interchange: The project will aid in establishing and/or strengthening professional relationships and interchange between selected local researchers and recognized commodity specialists in IARCs and other research centers. This scientific interchange will allow a limited number of local researchers to

travel to centers of excellence to observe and discuss commodity technology and methodology with experts in priority commodities. It is expected that these commodity specialists will be among those invited to visit Jamaica to aid the researchers in the development of local commodity research programs, will provide advice and counsel, and that long term scientific relationships will be established that will be beneficial to the program. These opportunities for scientific interchange will be offered only to selected researchers who have demonstrated their dedication to undertaking adaptive field research in collaboration with farmers.

Visiting specialists involved in the scientific interchange will conduct workshops and seminars under the same arrangements as noted above for the specialists brought in under the research contracts.

Short Term Training: Support will be available to provide short term training opportunities for local researchers who demonstrate interest and skill in conducting on-farm commodity research and proper motivation. Selected researchers, including those identified for subsequent contract work (see section "Contracts Research" above), will be sent to IARCs and other selected research centers to receive short term (1 - 3 months) training in specific commodity technology, research techniques and research methodologies.

Minor Rehabilitation of Existing Facilities: Although there have been several projects financed by other donors in the past ten years which have upgraded the physical institutional aspects of research in Jamaica, there still exists a need for limited additional equipment and supplies to carry out an adaptive/applied agricultural research program at the level envisaged by this project, e.g. no station currently has a small plot section properly designed and secured for initial screening of new germ plasm. The Project, therefore, includes limited funds to supplement those provided by the GOJ in order to upgrade selected facilities at Bodles, one of the GOJ research centers. It is expected that these activities will include the levelling of land, the design and laying out of research plots, and fencing.

IV. COST ESTIMATES AND FINANCIAL PLAN

A. Overview

The total cost of the Agricultural Research Project is estimated at $7.6 million. AID financing will be in the form of Grant funds which will be obligated over a six year period; $0.5 million in fiscal year 1986 and the remainder in the following five years.

B. Funding

The AID Grant funding of $7.6 million will be used for the following items:

-- Long term technical assistance of a PD and APD who will be located in the JADF;

-- Research grants/contract support including short term technical assistance through multiple research contracts;

-- Scientific interchange including in-service training, international research travel, and in-country training;

-- Limited improvements of parts of one research station as necessary to carry out applied/adaptive research: and

-- Assessments, Evaluations and Audits.

The portion of funding going to Operations and Research is $2.28 million and $5.32 million respectively. Of the $4.08 million available for supporting grants and contracts, approximately $1.2 million would be allocated to the estimated five contracts to be phased in over a 4-year period, 1986/87 to 1989/90. The duration of a 'normal' contract would be three years and would be renewable.

Research grants would normally run for one or two years, renewable for a third year, but, rarely, for a fourth year. Grants are intended to cover mainly recurring expenses and small equipment/instruments required for the proposed investigations. Grants will vary in amount depending on careful analysis of requirements. A yearly average of $411 thousand is expected to be available over the seven-year life of JARP. Of course, the mix of contracts and grants may vary depending on the need and situation.

C. Cost Summary

Table I is the Summary Cost Estimate and Financial Plan by project inputs and financial sources. The inputs deal with technical assistance, administrative support, research grants/contracts, training/conferences, and commodities and construction for research station rehabilitation.

Table II shows the project's estimated costs by project outputs and disbursement category. The outputs are listed by project coordination and administration, adaptive/applied research trials, local research enhancement, and substation rehabilitation. The disbursement categories are technical assistance, administrative support, commodities, research grants/contract support, training/conferences, construction, assessments/evaluations/audits, and miscellaneous. Miscellaneous includes additional short term TA, commodities, and training, particularly for satisfaction of the requirements delineated in the Environmental Assessment.

Table III is a projection of project expenditures by project years 1986 through 1993.

TABLE I: Summary Cost Estimate and Financial Plan (US$000)

USE (PROJECT INPUTS)	FINANCIAL SOURCES FX	LC	TOTAL
1. Long Term TA			
- Program Director (80 pm)	584	178	762
- Assistant Program Director (76 pm)	243	260	503
2. Administrative Support			
- Personnel	-	170	170
- Operations	25	287	312
- Commodities	44	116	160
3. Research			
- Grants/Contracts	1,680	2,400	4,080
- Short Term TA Support	365	-	365
4. Training/Conferences	163	22	185
5. Rehabilitation			
- Commodities	145	-	145
- Construction	-	120	120
6. Assessments/Evaluations/Audits	120	70	190
7. Miscellaneous*	237	371	608
	3,606	3,994	7,600

*Miscellaneous includes additional short term TA, commodities, and training, particularly for satisfaction of the requirements delineated in the Environmental Assessment.

TABLE II: Estimated Costs by Project Outputs/Inputs (US$000)

	TA	Admin. Support	Commod.	Research Grants/ Contract Support	Training/ Conferences	Constr.	Assess. / Eval./ Audits	Misc.*	Total
Project Outputs									
1. Project Coord & Administration	1,265	482	160	-	-	-	190	182	2,279
2. Adaptive/Applied Research Trials	365	-	-	4,080	-	-	-	387	4,832
3. Local Research Enhancement	-	-	-	-	185	-	-	16	201
4. Station Rehabilitation	-	-	145	-	-	120	-	23	288
	1,630	482	305	4,080	185	120	190	608	7,600

*Miscellaneous includes additional short term TA, commodities, and training, particularly for satisfaction of the requirements delineated in the Environmental Assessment.

TABLE III: Projection of Expenditures by Project Year (US$000)

	Yr.1	Yr.2	Yr.3	Yr.4	Yr.5	Yr.6	Yr.7	TOTALS
LONG TERM TA								
Program Director	140	146	148	150	58	60	60	762
Asst. Program Director	120	123	50	54	50	52	54	503
ADMINISTRATIVE SUPPORT								
Personnel								
Admin. Asst./Secretaries	16	16	17	20	21	24	24	138
Driver	4	4	4	5	5	5	5	32
Operations								
Office Rental	15	15	16	16	17	18	18	115
Utilities	4	4	5	5	5	6	6	35
Supplies/Misc.	6	8	8	9	10	10	10	61
Publications	1	1	1	1	1	1	1	7
RAC Expenses	4	4	4	4	4	4	4	28
Vehicle O&M	8	9	9	10	10	10	10	66
Commodities								
Vehicles (2 plus replace.)	20	0	0	12	12	0	0	44
Furnishings/Equipment	50	22	12	8	8	8	8	116
RESEARCH GRANTS/CONTRACT SUPPORT								
Grants/Contracts	250	630	810	800	750	500	340	4080
Short Term TA Support	75	80	70	50	35	35	20	365
SCIENTIFIC INTERCHANGE								
In-service training - IARC's	10	13	20	20	10	10	10	93
Research Travel Abroad	6	8	8	8	6	6	6	48
In-country Training	5	5	10	10	5	5	4	44
REHABILITATION OF STATION								
Commodities								
Equipment	50	30	10	10	0	0	0	100
Supplies/Repairs	10	13	8	8	6	0	0	45
Construction								
Basic Improvements (field plots)	80	30	10	0	0	0	0	120
ASSESSMENTS	0	0	40	0	40	0	0	80
EVALUATIONS	0	0	0	0	0	0	40	40
AUDITS	10	10	10	10	10	10	10	70
MISCELLANEOUS*	77	102	110	105	92	66	55	608
TOTAL	961	1273	1380	1315	1155	830	685	7600

*Miscellaneous includes additional short term TA, commodities, and training, particularly for satisfaction of the requirements delineated in the Environmental Assessment.

D. Methods of Financing

TABLE IV: METHODS OF IMPLEMENTATION AND FINANCING

Component	Implementation	Financing	Approx Amount ($000)
Long Term TA	Contract	Advance/Reimbursement	1265
Administrative Support			
- Personnel	Contract	Advance/Reimbursement	170
- Operations	Contract	Advance/Reimbursement	312
- Commodities	Contract	Advance/Reimbursement	160
Research Grants/Contract Support			
- Grants	Grants	Advance/Reimbursement	2880
- Contracts	Contracts	Advance/Reimbursement	1200
- Short Term TA Support	Contract	Advance/Reimbursement	365
Scientific Interchange			
- In Service Training	Contract	Advance/Reimbursement	93
- Research Travel Abroad	Contract	Advance/Reimbursement	48
- In country Training	Contract	Advance/Reimbursement	44
Station Rehabilitation			
- Basic Improvements	Contract	Advance/Reimbursement	120
- Equipment	Purchase Order	Advance/Reimbursement	100
- Supplies/Repairs	Contract	Advance/Reimbursement	45
Assessments	Contract	Advance/Reimbursement	80
Evaluations	Contract	Advance/Reimbursement	40
Audits	Contract	Advance/Reimbursement	70
Miscellaneous	Contract	Advance/Reimbursement	608
			7600

JADF procedures for contracting, procurement, and payment were reviewed by USAID personnel in 1985, and it was determined that the JADF had adequate capacity and capability for its activities at that time. Prior to the advancement of any funds for this activity, an additional review will be carried out. All contracts, grants, and purchase orders will be between JADF and the applicable party.

V. IMPLEMENTATION ARRANGEMENTS

A. Administrative Arrangements - JADF

The advantages of integrating the research program with the JADF are obvious and compelling. The JADF institutional structure is already functioning and appears well managed. Thus, developing a new institution is not necessary and project establishment could be greatly expedited. However, both the research program and the development banking program of the organization will have different mandates, objectives and operational procedures. In addition, to be effective, the RAC membership must be different from that of the JADF Board and would deliberate on a different set of guidelines. Of course, one or two members will serve on both bodies.

The overall implementation of the project will be the responsibility of the research program's PD. The PD and APD will be identified by a search committee which includes representation from CARDI, the IARCs, JADF, USAID, JAS and the MOA. The management staff will be contracted by the JADF; however, final approval of all contracts will be retained by USAID. The search committee may be reconvened to select future Directors and Assistant Directors, or the Research Advisory Council may designate its own search committee.

Initially, the PD will be recruited with intent of remaining four years and the APD two years with appointment made on a yearly basis, renewable if performance is satisfactory. The contracts may provide for an extension beyond the original intent if a suitably qualified Jamaican cannot be found to fill the positions. To this end, the project will aim to identify Jamaican personnel with the technical capability and managerial skills required to successfully manage a national adaptive/applied commodity research program that focuses on solutions to agricultural production problems on farmers fields.

The RAC will meet to consider and approve priorities, the annual workplan, and the budget. The RAC is the chief means of constituency feedback and input; its meetings are therefore extremely important to the functioning of the program.

A subcommittee will be established to act as a small RAC Executive Committee to assist the PD, as more frequent contact and guidance will be necessary. The PD will present selected grants/contract proposals to the RAC Executive Committee and solicit their advice as to the proposals' relevance to policies and goals established by the full RAC. However, the authority to actually select proposals for funding will reside with the PD with the Executive

Committee's consent. The PD will also have the responsibility for negotiating and finalizing contracts and agreements with other institutions for support and services such as research and training in JADF's name.

As stated above, overall implementation of this Project will be the responsibility of the research program's PD, once he is on board. Prior to this, JADF, with assistance from USAID staff, will have initiated the necessary steps to begin procurement of the support commodities to be financed under the project.

B. USAID Arrangements

The implementation responsibility within USAID will be held by the Agriculture and Rural Development Office. Additional Mission support will be provided by other USAID offices as appropriate (e.g. Office of Project Development and Support, Office of Contract Management, and Office of the Controller).

1. Disbursement Procedures: USAID will advance funds for all Project activities directly to special accounts (US dollar and local currency) set up specifically by JADF for JARP activities. The PD will prepare plans for projected financial needs on a monthly basis, and, following review by the JADF Board, will submit them to USAID for approval. Once approved, disbursements will be made. The research program PD will draw down these funds and JADF will account for them in accordance with normal AID advance/reimbursement procedures. These procedures include a rolling 90-day advance followed by a monthly reporting requirement.

2. Procurement Procedures: AID grant funds, totalling US$7.6 million over the life of the project, will be used for long term technical assistance, a wide variety of short term consulting services, training, travel, commodities, and support of research contracts and grants. Contracts for AID funded commodities and services for Rehabilitation of the Research Station plus Furnishings/Equipment and Vehicles for use by the research program management will be approved by AID prior to their execution. JADF and the research program PD, with assistance from USAID, will be responsible for all procurement under the project. There will be a number of off-shore procurements, as most of the technical assistance and commodities are expected to be of US source and origin. Off-shore commodities procurement will include vehicles (for management staff), miscellaneous equipment, and supplies.

3. Monitoring: Detailed project monitoring will be the responsibility of the Project Officer in the Mission. Formal

project reviews will take place on a quarterly basis. The reviews will assess progress in implementing the project, and identify and resolve constraints to the extent possible. Prior to the review, the management staff will prepare a summary progress report which will outline accomplishments for that quarter, problems encountered and recommended solutions, and specific tasks for the subsequent quarter. Participants in this review process will include the PD, USAID staff, and selected RAC members when appropriate.

In addition, a representative from the USAID Mission will attend meetings of the RAC as an ex officio representative.

C. Collaboration with MOA

The research program will relate to the MOA Research and Development in various ways. Firstly, it is likely that an individual from MOA Research and Extension will serve on the RAC. The MOA R&D staff will be eligible to submit research proposals and grants. In addition, the Bodles Research Station may serve as headquarters for some research activity sub-projects and the primary site for introducing new genetic stocks where quarantine procedures are justified. Special budgetary provision will be made to upgrade the Bodles station to carry out these preliminary JARP specific evaluations and trials, primarily by developing a secure, well planned small plot section. However, at least 60 to 75 percent of field research will be carried out elsewhere, mainly in farmer's fields representing important production ecologies for the different commodities.

D. Implementation Plan

CALENDAR YEAR	CY86	CY87	CY88	CY89	CY90	CY91	CY92	CY93
MONTH	JASOND	JFMAMJJASOND	JFMAMJJASOND	JFMAMJJASOND	JFMAMJJASOND	JFMAMJJASOND	JFMAMJJASOND	JFMAMJJ
Cooperative Agreement Signed						X		
Long Term TA								
- PD Search	XXXXX							
- PD Contract	X							
- APD Search	XXXXX	XXXX						
- APD Contract		X						
- Fin Mngr Contracted	X							
Admin Support hired		XXXX						
Commodities procured								
- Vehicles		XXX		XXX	XXX			
- Furnishings		XXX						
- Equipment		XXX						
Research								
Grants/Contracts		XXXXXX	XXXXXXXXXXX	XXXXXXXXXXX	XXXXXXXXXXX	XXXXXXXXXXX	XXXXXXXXXXX	XXXXXXX
Short Term TA		XXXXXX	XXXXXXXXXXX	XXXXXXXXXXX	XXXXXXXXXXX	XXXXXXXXXXX	XXXXXXXXXXX	XXXXXXX
Scientific Interchange								
In Service Training		XXXXXX	XXXXXXXXXXX	XXXXXXXXXXX	XXXXXXXXXXX	XXXXXXXXXXX	XXXXXXXXXXX	XXXXXXX
Research Travel		XXXXXX	XXXXXXXXXXX	XXXXXXXXXXX	XXXXXXXXXXX	XXXXXXXXXXX	XXXXXXXXXXX	XXXXXXX
In Country Training		XXXXXX	XXXXXXXXXXX	XXXXXXXXXXX	XXXXXXXXXXX	XXXXXXXXXXX	XXXXXXXXXXX	XXXXXXX
Station Rehabilitation								
Improvement Planning	XX							
Basic Improvements		XX XXXXXXXX						
Equipment		XXXXXXXX				XXX		
Supplies/Repairs		XXXXXXXX						
Assessments				X		X		
Evaluations								X
Audits		X	X	X	X	X	X	
PACD								X

E. Evaluation

Considerable emphasis will be placed on internal assessment of this project at periodic intervals during project implementation. The results of these assessments will determine the extent of future funding and the directions to be taken by the project.

Internal assessments are planned for March of 1989 and 1991. The timing of the first will allow for the identification and contracting of the research program management staff as well as a full two years of research grants and contracts. A final evaluation is scheduled for the final year of the project to determine the impact of the project.

Assessment activities will focus on the capacity of the JARP to successfully (1) implement an ongoing research program consistent with the needs of Jamaican producers, (2) disseminate research findings to producers, (3) contribute to increasing agricultural yields and national production, and (4) establish an independent financial base.

The first internal assessment will concentrate on progress made with respect to the organization and initiation of the research program's operations. Special attention will be paid to the research program's capacity to initiate adaptive research for the selected high-priority crops, the establishment of needed linkages with international research centers, and the development of a constituency through the appropriate selection of RAC members. The second internal assessment will assess the efficiency of the research program's internal structure and administrative procedures, the extent to which the incorporation of on-farm trials has resulted in successful dissemination of research results, the accomplishments achieved in relation to training efforts to increase the agricultural research human resource base, and the degree to which additional financial support has been obtained from other donors.

A comprehensive evaluation will be conducted during the last year of the Project's life. It will assess the quality of the research program, the degree of dissemination of research results, and the impact of Project activities on increasing production. Variables to be measured will include: agricultural practices, acquaintance with and use of modern technology, agricultural yields, and post-harvest practices.

Each of the assessments, as well as the final evaluation, will require about 2.5 weeks of effort by a team of experts in agricultural crops, livestock, research management, agricultural production, economics, and extension. Both the assessments and the evaluation will involve, as resource personnel,

representatives of the research program and USAID staff. The participation of AID/Washington personnel may also be required.

In support of the assessment/evaluation process, JADF will undertake a yearly audit of the research program accounts following the end of the calendar year (in January) so that these audits will be available to the assessment/evaluation teams.

TABLE V: ILLUSTRATIVE SCHEDULE OF REVIEW AND EVALUATION

	Fiscal Year							
	1986	1987	1988	1989	1990	1991	1992	1993
Yearly Audit		1/87	1/88	1/89	1/90	1/91	1/92	1/93
Assessment				5/89		5/91		
Evaluation								5/93

VI. PROJECT ANALYSES

A. Technical Analysis (Summary)

Government parastatals currently have the best research systems in the country, through single commodity programs of traditional export crops: coconut, sugar, and to some extent coffee and cacao. This is a pattern found throughout the hemisphere, where there has been a long history of strong producers' associations of export crops, and where members are assessed to pay for services in marketing, quality control, input supply systems, and research. Although under nominal government control, research is essentially self-financed and self-determined by the organization. Some successful elements of these research programs will be duplicated in this program, particularly the emphasis on client participation. With the possible exception of small grants, however, the program will not focus on these commodity boards. To do so on a large scale would begin to develop a dependency on outside sources of funding, and lessen the independence and financial responsibility of the members.

The project will also work primarily outside of the MOA, which is responsible for national agricultural research and extension. Government collaboration will be sought, and the project hopes to use government facilities such as the experiment station at Bodles, and to include government researchers as appropriate. However, financial and management procedures, low and unpredictable budgeting levels, government personnel incentive structures, and other factors do not at present warrant confidence in a program to work through current Ministry programs. Moreover, the alternative system being developed through a non-profit organization should develop results at the farm level more quickly than even a well-managed bureaucratic structure could provide.

Once the staff of the research program and the members of the RAC are selected, the first major implementation task is to set research priorities. Jamaica's interests will be better served if support is focused on several aspects of a relatively few commodities rather than on only one or two problem areas in a large number of commodities. This will result in a multi-disciplinary approach to biological research and ultimately the most efficient system.

Five commodity groups are recommended for attention during the initial years of the project: (1) starchy food crops (especially yams), (2) food legumes, (3) cereals (especially maize and sorghum), (4) pastures and forages, and (5) horticultural crops.

The starchy food crops (roots, tubers and plantains) are an important source of food energy (14.3%), but very little of the local consumption is imported. Moreover, some root crops, eg. yams, are among the Island's fastest growing exports. However, cereals are heavily imported (about 95 percent of consumption) and make a substantial contribution to both direct human nutrition and animal production. Cereals comprise the most important source of both caloric energy (33.4%) and protein (22.2%) in the Jamaican diet. A third group of crops, the pulses, could very profitably be improved, both as a food partially substituting for animal products and cereals, and as an important component of small holder farming systems. Another commodity area with implications for contributing both to the production of animal products and reducing imports is pastures and forages. This is a particularly interesting area as current production levels are low and considerable technology is now becoming available. Of course, pasture improvement must be combined with better animal husbandry and management. As with pulses, forage crops (especially the legumes) are a positive addition to the farming system. The fifth commodity grouping is fruits and vegetables. Although per capita consumption is already reasonably satisfactory, there are good possibilities for both increasing local consumption and export of horticultural crops.

Once priorities are established, project implementation will be primarily through research grants and contracts. Rather than building a permanent research staff, headed by commodity specialists, this program will rely on medium-term grants and contracts to carry out research. Renewal of grants and contracts will depend on performance, especially progress towards having technologies in the field that will improve farm income and productivity.

This is probably the most controversial aspect of the program. Grant/contract research is often criticized because (i) it is difficult to keep within a structure's priorities, causing the acceptance of contract research from any group who offers to finance it, thus distorting the research priorities of specific groups e.g. commodity boards; (ii) it can breed instability and uncertainty, as scientists are never sure of how long they can continue their work.

In this case, these disadvantages do not seem to exist since funding to adequately support research by the commodity boards has been the norm. The grants/contracts will be developed in conjunction with the PD in line with established priorities. Moreover, while the grant/contract may be for a specified time, it can be renewed as long as the PD and the RAC see it producing viable results.

Grants/contracts also seem to be a useful mechanism in a situation where credibility for research is quite low, often non-existent. The grants/contracts will be performance-based. If successful, they should help develop strong constituency pressure for more and better research, and in the long run provide an important building block to a more scientific approach to agricultural development. Grants/contracts provide a flexible mechanism for achieving early research development.

The organization of the research/adaptation/adoption process can vary appropriately, depending on the objectives, the definition of the problem, etc. Contracts and grants can be offered to public or private organizations or individuals. Grants would be made in cases where a research proposal has been presented and is approved by the PD based on the priorities and guidelines of the RAC. A contract, on the other hand, would be used for areas in which no appropriate research proposals have been received or where special expertise is required. As an example, a grant might be given to a university professor who wishes to involve students in a research proposal on replicating yield trials of ten peanut varieties, and on-farm research program to include his administrative work and the expenses of his students. Or, in a completely different direction, the PD may decide that the services of a plant pathologist or a communications specialist should be contracted for a specified time period. In the latter case, the expertise of the specialist may be germane to a specific task or be relevant to a number of research grants.

While there is some necessary work to be done on experiment stations, the emphasis of this program is on getting the technologies tested on farmers' fields as quickly as possible. The mechanisms for doing so will vary, depending on the conditions of the "contract" set up. In some places, a farming systems approach may be used, in others, a single commodity-based approach may be appropriate. However, in all cases, the syndrome of trying to pass results through a conventional research/extension system will be avoided. There will not be a cadre of poorly trained extensionists, often with little contact with researchers, and often with many duties besides extension, responsible for diffusion. Researchers with Bachelors' degrees, often with short term specialized training at international centers, will undertake much of the necessary adaptive research on farmers' fields together with farmers. The direct input of farmers will be solicited at each step of the adaptive research improvement process, especially in the latter stages of technology refinement and validation (evaluation) - a direct means of multiplying and expanding the testing base.

B. Economic Analysis (Summary)

Rates of Return to Agricultural Research

Agricultural research can improve the well-being of farmers by lowering his costs of production or increasing the demand for his produce. If many farmers adopt a cost reducing technology for a commodity that is not internationally traded, prices will be reduced and the consumers will benefit from lower prices. Users of foreign exchange will benefit from research which increases exports or decreases imports and, thus, increases the availability of foreign exchange.

The rates of return to government investments in research have been very high in a number of developing and developed countries. Studies that have been conducted in Asia and Latin America show annual internal rates of return that are grouped around 30 to 50 percent. When local research has collaborated with the IARCs, the returns on local expenditures on research have been more than 100 percent. These returns are much higher than the returns to investment in other types of development projects.

Rate of Return to This Project

On the basis of discussions with agricultural experts from Winrock International, IITA, and USAID/J, conservative estimates of the potential changes in yield per acre of 50 percent in yams and 10 percent in red peas, tomatoes, bell peppers, and cucumbers were made. Using these estimates and a rate of adoption which gradually reached 20 percent after fifteen years, the benefits to research were estimated. The rate of return to this project would be over 30 percent. Even if the yield estimates are cut in half, the returns to research will still be almost 20 percent. Thirty percent is probably an underestimate of the rates of return since it assumes that only five crops will be affected by research and that the spread of technology will be very slow. The main thing that could make these figures overestimates is if the money in the project is not actually spent to do on farm research or it is spent on commodity research in which there is no technology which can be easily adapted to Jamaican conditions.

There appears to be considerable foreign demand for yams, tomatoes, bell peppers, and cucumbers. They are all being exported at present. Assuming Jamaica is a small country in terms of world exports of these crops and there is little increase in local demand, almost all of the increase in production would be exported.

Research Priorities

The money for research grants and contracts in this project is quite limited. The most important factors in setting commodity priorities are (1) the availability of technology that can be adapted through applied research and (2) the importance of the commodity. Using these criteria, it appears that yams and pastures should receive priority. Both appear to have technical possibilities because of work done at the IARCs, and both are important to the economy of Jamaica. However, before priorities are fixed in this project, a thorough evaluation of the potential for productivity growth is needed. This will require scientists who know the level of technology being used in Jamaica and the technology available in the IARCs, the United States, and elsewhere. It will also require an analysis of the demand for goods and the potential economic benefits from technology.

C. Institutional Analysis (Summary)

The most feasible organization to implement the project is the JADF. This private, non-profit foundation exists to provide loans and equity financing to agribusiness and agroindustry firms. It was created and is supported through P.L.480 sales proceeds and an AID grant. Its basic purpose is to provide financing to agricultural businesses, as part of a larger effort to strengthen the private sector and help develop Jamaican agriculture. While the JADF has given a few small grants related to research, and its clients might be potential beneficiaries of future research, the central thrust of the organization at present is clearly not research. However, in other ways, the JADF is quite similar to the type of organization needed to establish a firm footing for national agricultural research.

For administrative and financial matters, the research program will report to the JADF Board via the RAC Executive Committee. The main policy advisory body of the research program will be the RAC, composed of members from farmers' organizations, educational institutions, international and national research groups, and other agricultural interests. The selection of members of the RAC, along with the selection of the PD, are the crucial decisions that will determine whether an apolitical, private sector, results-oriented research program is possible.

The first step in establishing the RAC will be the formation of a "Selection Commitee". This body will act as an interim RAC and will in turn select the members of the RAC. There will be between 15 and 21 people on the RAC, selected to represent both the composition of the users of research and the private nature of the research program. To provide continuity, their terms of office should be six years, with reelection staggered.

An Executive Committee, selected by the RAC from among its members and bearing in mind the composition of the RAC, will include a President, a Vice-President, and four other members. They will be elected by the RAC for two years, with the possibility of re-election. The PD will act as Permanent Secretary to the Executive Committee and will have the right to vote.

The advantages of integrating the research program with the JADF are obvious. The JADF institutional structure is already functioning and appears well managed. Thus, developing a new institution is not necessary and project establishment could be greatly expedited.

This arrangement may also be convenient and reliable for AID to administer, but care should be taken to: (1) ensure that the distinct mandates and goals of the JADF development banking program and the research program are both achieved; (2) not overtax the management and infrastructure of the JADF so that it no longer functions efficiently for either program; (3) permit the PD and his staff the freedom of action to address the JARP's goals and carry out its program; and (4) allow the selection of the RAC membership most appropriate and beneficial for agricultural research in Jamaica.

D. Environmental Concerns

Although research activities, such as those funded under the project normally fall under "Categorical Exclusions" as described in the Environmental Procedure Regulations paragraph 216.2(c)(iii), the possibility that pesticides may be used during on-farm crop trials results in paragraph 216.2(e) being the relevant section. This resulted in a positive determination under the Initial Environmental Examination requiring an environmental assessment of pesticide use during the early stages of project implementation. The EA includes (1) a generic assessment of the range of pesticides available for use on any given project promoted crop, (2) conditions under which these pesticides may be used, (3) an appropriate, yet simple, training mechanism in Jamaica which could be mobilized to train agricultural research staff and participating farmers in the safe use, handling and storage of pesticides, and (4) a detailed budget for any such training, as well as an implementation plan.

The EA is currently in draft. Field applications of pesticides will not commence until the EA and any requisite training have been completed.

E. Social Analysis (Summary)

A random sampling of farmers were interviewed to determine the impact of the project on both the traditional and non-traditional agricultural sectors and the role that farmers would be willing to play in the later stages of applied/adaptive research. Six geographical areas were chosen that were determined to be representative of Jamaica as a whole and which were subject to the influence of research, on-farm experiments, or demonstrations. Eight farmers were interviewed in each of the six areas, resulting in a total survey population of forty-eight. Of these, 17 percent were part time farmers and 83 percent farmed full time.

The survey results showed that 44 percent of the farmers had at some time had on-farm trials or experiments on their farms. The degree of adoption of the experimental technology was directly related to the success/failure of the projects, with 58 percent continuing to use the practice or technique for subsequent seasons. It was further concluded that the rate of adoption was higher for mixed farmers as they were able to spread their risks. Increased yields resulting from the trials or research was reported by 67 percent of the farmers. Although 62 percent of the farmers indicated increased labor input and thus increased cost in carrying out farming using the research methods, many also pointed out that this increased cost was more often than not off-set by the increased yield.

In this survey, 52 percent of the farmers felt that the research had had a positive effect on other farmers in the area and that they had adopted the techniques.

Only 4 percent of the farmers indicated that they would not be interested in participating in future trials. Of those that responded positively, the greatest number (38 percent) placed no conditions on their participation provided that the project did not interfere with the normal operations of the farm. An additional 27 percent would require that the inputs be provided. Additional conditions ranged from honesty of the research staff to provision of land and payment for care of crops.

An examination of the role of women in the project concluded that women would participate in the project as members of the RAC and as recipients of contracts, grants and training as there are a number of Jamaican women active in agricultural research. However, the primary and most significant impact on women would be through their roles as beneficiaries. As the role of women in the agricultural sector in Jamaica tends to be task specific rather than crop specific, care should be taken during project implementation to focus on the entire cropping cycle, to include women farmers among the "model farmers" and to sensitize the researchers to the importance of women in agriculture and to encourage them to seek out and work with women farmers in overcoming the particular problems and constraints under which they must operate.

ANNEXES

A. Log Frame

NARRATIVE SUMMARY	INDICATORS	MEANS OF VERIFICATION	ASSUMPTIONS
GOAL			
To increase agricultural production through improved crop and livestock productivity, thereby increasing rural income, decreasing dependence on food imports, and increasing foreign exchange availability.	Over the next ten years: 50 % decrease in food imports from $75 million to $37.5 million 250 % increase in available FX from $20 million to $50 million	MOA statistics BOJ statistics	Stable political environment Normal weather patterns
PURPOSE	EOPS		
To identify solutions to current constraints to increased production and productivity by carrying out adaptive/applied research in priority commodity areas.The Project purpose will be accomplished by establishing an autonomous or semi-private research coordinating body which will determine priority research areas, develop intermediate range research plans, coordinate research efforts and promote mutually beneficial cooperation among research, extension, producers and agro-processors.	The RAC will have been firmly established with strong links to producers and other consumers of research. The execution of grants and contracts will have resulted in a useful flow of research. Jamaican researchers will have undergone short term training overseas while additional training will have been provided locally. The Scientific Interchange program will have provided informational travel for a number of Jamaican researchers while also funding the travel of selected commodity specialists from IARCs and other institutions to assist Jamaica. The visiting specialists, provided through short-term technical assistance, will have disseminated improved and adaptable technology to Jamaican researchers through conferences and workshops, as well as through assistance in the development of research proposals. Production efficiency in the selected commodities will have increased significantly. A constituency which understands the importance of applied/adaptive agricultural research and which supports the promotion of such research will have developed and matured.	Research coordinating body's records Project evaluation	High caliber researchers/managers with requisite experience available for TA positions

NARRATIVE SUMMARY	INDICATORS	MEANS OF VERIFICATION	ASSUMPTIONS
OUTPUTS			
1. RAC formed, functioning, and generating increased interest and support.	Staff contracted. Working capability established. Research proposals reviewed. Grants and contracts provided.	Research program's records Site visits	
2. Grants and contract research completed and improved technologies tested in the field.	Increased productivity of traditional food crops. Expanded production of non-traditional export crops.	MOA records	Farmers willing to participate in on-farm trials
3. Scientific interchange and linkages established.	Stronger linkages between Jamaican and international researchers and research centers. Continuous flow of information, expertise, and materials.	Research program's records Project evaluations Interviews	
4. Short term training completed and capabilities of Jamaican researchers improved.	Improved human resource base through training. Training provided to Jamaican researchers both locally and overseas.	Research program's records Project evaluations Interviews	
5. Minor Rehabilitation	Upgrading completed. Equipment in place.	Research program's records Site visits	

NARRATIVE SUMMARY	INDICATORS	MEANS OF VERIFICATION	ASSUMPTIONS
INPUTS			
	(US$000)	Research program records	
1. Long Term TA			
- Program Director	762	AID records	
- Assistant Program Direct	503		
2. Administrative Support			
- Personnel	170		
- Operations	312		
- Commodities	160		
3. Research			
- Grants/Contracts	4,080		
- Short Term TA Support	365		
4. Training/Conferences	185		
5. Rehabilitation			
- Commodities	145		
- Construction	120		
6. Assessments/Evaluations/Audits	190		
7. Miscellaneous	608		
	7,600		

5C(2) PROJECT CHECKLIST

Listed below are statutory criteria applicable to projects. This section is divided into two parts. Part A. includes criteria applicable to all projects. Part B. applies to projects funded from specific sources only: B.1. applies to all projects funded with Development Assistance loans, and B.3. applies to projects funded from ESF.

CROSS REFERENCES: IS COUNTRY CHECKLIST UP TO DATE? HAS STANDARD ITEM CHECKLIST BEEN REVIEWED FOR THIS PROJECT?	Yes (November 1985)

A. GENERAL CRITERIA FOR PROJECT

1. FY 1986 Continuing Resolution Sec. 524; FAA Sec. 634A.	
Describe how authorizing and appropriations committees of Senate and House have been or will be notified concerning the project.	Congress has been notified in accordance with routine AID procedures.
2. FAA Sec. 611(a)(1). Prior to obligation in excess of $500,000, will there be (a) engineering, financial or other plans necessary to carry out the assistance and (b) a reasonably firm estimte of the cost to the U.S. of the assistance?	Yes.
3. FAA Sec. 611(a)(2). If further legislative action is required within recipient country, what is basis for reasonable expectation that such action will be completed in time to permit orderly accomplishment of purpose of the assistance?	No further legislative action required.

4.	FAA Sec. 611(b); FY 1986 Continuing Resolution Sec. 501. If for water or water-related land resource construction, has project met the principles, standards, and procedures established pursuant to the Water Resources Planning Act (42 U.S.C. 1962, et seq.)? (See AID Handbook 3 for new guidelines.)	N/A
5.	FAA Sec. 611(e). If project is capital assistance (e.g., construction), and all U.S. assistance for it will exceed $1 million, has Mission Director certified and Regional Assistant Administrator taken into consideration the country's capability effectively to maintain and utilize the project?	N/A
6.	FAA Sec. 209. Is project susceptible to execution as part of regional or multilateral project? If so, why is project not so executed? Information and conclusion whether assistance will encourage regional development programs.	No N.A.
7.	FAA Sec. 601(a). Information and conclusions whether projects will encourage efforts of the country to: (a) increase the flow of international trade; (b) foster private initiative and competition; and (c) encourage development and use of cooperatives, and credit unions, and savings and loan associations; (d) discourage monopolistic practices; (e) improve technical efficiency of industry, agriculture and commerce; and (f) strengthen free labor unions.	(a) Yes, through increased production of agricultural export crops. (b) Yes, through funding of research initiated by individua and private firms. (c) N.A. (d) N.A. (e) Yes, through development and adaptation of productive ag technology (f) N.A.

8. FAA Sec. 601(b). Information and conclusions on how project will encourage U.S. private trade and investment abroad and encourage private U.S. participation in foreign assistance programs (including use of private trade channels and the services of U.S. private enterprise).	Research contracts will be drawn up with institutions to provide results in priority areas where no local expertise is available. Equipment procured from U.S. private sector firms.
9. FAA Sec. 612(b), 636(h); FY 1986 Continuing Resolution Sec. 507. Describe steps taken to assure that, to the maximum extent possible, the country is contributing local currencies to meet the cost of contractual and other services, and foreign currencies owned by the U.S. are utilized in lieu of dollars.	N.A. The COJ will not be directly involved in the implementation of this project.
10. FAA Sec. 612(d). Does the U.S. own excess foreign currency of the country and, if so, what arrangements have been made for its release?	No, there is no excess U.S. owned local currency available for this project.
11. FAA Sec. 601(e). Will the project utilize competitive selection procedures for the awarding of contracts, except where applicable procurement rules allow otherwise?	Yes
12. FY 1986 Continuing Resolution Sec. 522. If assistance is for the production of any commodity for export, is the commodity likely to be in surplus on world markets at the time the resulting productive capacity becomes operative, and is such assistance likely to cause substantial injury to U.S. producers of the same, similar or competing commodity?	N.A. No

13. FAA 118(c) and (d). Does the project comply with the environomental procedures set forth in AID Regulation 16.	Yes
Does the project or program take into consideration the problem of the destruction of tropical forests?	N.A.
14. FAA 121(d). If a Sahel project, has a determination been made that the host government has an adequate sysem for accounting for and controlling receipt and expenditure of project funds (dollars or local currency generated therefrom)?	N.A.
15. FY 1986 Continuing Resolution Sec. 533. Is disbursement of the assistance conditioned solely on the basis of the policies of any multilateral institution?	No
16. ISDCA of 1985 Sec. 310. For development assistance projects, how much of the funds will be available only for activities of economically and socially disadvantaged enterprises, historically black colleges and universities, and private and voluntary organizations which are controlled by individuals who are black Americans, Hispanic Americans, or Native Americans, or who are economically or socially disadvantaged (including women)?	The project will be funding research through both grants and contracts as well as providing technical assistance (both long and short term) to researchers in Jamaica. HBCUs will be included in the pool of institutions considered for contracts and/or for providing individuals for the necessary TA.

B. FUNDING CRITERIA FOR PROJECT

1. Development Assistance Project Criteria

a. FAA Sec. 102(a), 111, 113, 281(a). Extent to which activity will (a) effectively involve the poor in development, by extending access to economy at local level, increasing labor-intensive production and the use of appropriate technology, spreading investment out from cities to small towns and rural areas, and insuring wide participation of the poor in the benefits of development on a sustained basis, using the appropriate U.S. institutions; (b) help develop cooperatives, especially by technical assistance, to assist rural and urban poor to help themselves toward better life, and otherwise encourage democratic private and local governmental institutions; (c) support the self-help efforts of developing countries; (d) promote the participation of women in the national economies of developing countries and the improvement of women's status, (e) utilize and encourage regional cooperation by developing countries?

(a) The research will result in the development of production technology appropriate to the Jamaican situation and oriented to the needs of small and medium farmers.

(b) The use of farmers' fields during the testing stages of research will result in early dissemination of any viable research results.

(c) Upgrade the capability of researchers locally.

(d) Women make a significant contribution to agricultural exterprises in Jamaica. They will therefore be represented in the project decision making process.

(e) Development and institutionalization of relationship between Jamaican researchers and IARCs, other national research institutions and other researchers.

b. FAA Sec. 103, 103A, 104, 105, 106. Does the project fit the criteria for the type of funds (functional account) being used?	Yes
c. FAA Sec. 107. Is emphasis on use of appropriate technology (relatively smaller, cost-saving, labor-using technologies that are generally most appropriate for the small farms, small businesses, and small incomes of the poor)?	Yes
d. FAA Sec. 110(a). Will the recipient country provide at least 25% of the costs of the program, project, or activity with respect to which the assistance is to be furnished (or is the latter cost-sharing requirement being waived for a "relatively least developed country)?	N.A. The GOJ is not directly involved in the implementation of this project. The project activities will be financed through a grant to a private organization.
e. FAA Sec. 122(b). Does the activity give reasonable promise of contributing to the development of economic resources, or to the increase of productive capacities and self-sustaining economic growth?	Yes, the project will contribute to the development of the agricultural sector by developing and disseminating technologies for increasing production and productivity.

f. FAA Sec. 128(b). If the activity attempts to increase the institutional capabilities of private organizations or the government of the country, or if it attempts to stimulate scientific and technological research, has it been designed and will it be monitored to ensure that the ultimate beneficiaries are the poor majority?	Yes. A criteria for acceptance of a grant or contract proposal for funding will be a plan for on farm testing of research results, thereby disseminating these results directly to cooperating farmers.
g. FAA Sec. 281(b). Describe extent to which program recognizes the particular needs, desires, and capacities of the people of the country; utilizes the country's intellectual resources to encourage institutional development; and supports civil education and training in skills required for effective participation in governmental processes essential to self-government.	A research coordinating mechanism has been under consideration by the government for some time. The project will provide the supplemental resources and training needed by local researchers to carry out needed research.

2. Development Assistance Project Criteria (Loans Only)

a.	FAA Sec. 122(b). Information an conclusion on capacity of the country to repay the loan, at a reasonable rate of interest.	N/A
b.	FAA Sec. 620(d). If assistance is for any productive enterprise which will compete with U.S. enterprises, is there an agreement by the recipient country to prevent export to the U.S. of more than 20% of the enterprise's annual production during the life of the loan?	N/A

3. Economic Support Fund Project Criteria

a.	FAA Sec. 531(a). Will this assistance promote economic and political stability? To the maximum extent feasible, is this assistance consistent with the policy directions, purposes, and programs of part I of the FAA?	Yes. Yes.
b.	FAA Sec. 531(c). Will assistance under this chapter be used for military, or paramilitary activities?	No.
c.	ISDCA of 1985 Sec. 207. Will ESF funds be used to finance the construction of, or the operation or maintenance of, or the supplying of fuel for, a nuclear facility? If so, has the President certified	No. N/A

that such country is a party to the Treaty on the Non-Proliferation of Nuclear Weapons or the Treaty for the Prohibition of Nuclear Weapons in Latin America (the "Treaty of Tlatelolco"), cooperates fully with the IAEA, and pursues nonproliferation policies consistent with those of the United States?

d. FAA Sec. 609. If commodities are to be granted so that sale proceeds will accrue to the recipient country, have Special Account (counterpart) arrangements been made? N/A

Annex C
Technical Analysis

Introduction

Currently, a very limited level of research is being done by many organizations, including the Ministry of Agriculture (MOA), statutory commodity boards (Sugar, Coconut, Banana and to a lesser degree Coffee and Cocoa), and other public and private entities. Research reporting and testing results for economic returns are not being do e and livestock research has had little emphasis on nutrition, management and disease control, the principal problem. Although the Government of Jamaica (GOJ) has received assistance from the IDB, IICA, FAO, CARDI and other donors, research still remains a low priority, receiving minimal budgetary support, and its contribution continues to deteriorate. It has been difficult to attract and retain well-qualified staff because of current budgetary constraints an archaic civil service system. A proposal has been made to centralize most agricultural research in Jamaica into one National Agricultural Research Institute. However, the outlook for resolving these problems in the near future is unlikely.

The capacity to conduct adaptive research in Jamaica has deteriorated to the extent that it is no longer possible to strengthen the public sector. Consequently, there is an overriding need for mechanisms whereby operational support for applied/adaptive field research could be provided through grants or other means to entities and individuals that would not represent a GOJ budgetary add-on. Given the current economic environment, recommending a traditional program of upgrading facilities and large transfusions of funds that would flow through the national budget would not be an acceptable procedure. The research must focus on crops with much of it carried out in cooperation with farmers rather than on research stations.

The purpose of the JARP is to resuscitate an active and efficient research program for Jamaica's high priority agricultural commodities. This project will also allow adopting of new approaches to both generating and transferring technology. However, to be successful the program must focus on a limited number of commodities and problem areas, at least during the initial years of the project. The most urgent needs are for pragmatic initiatives in crops of major importance to Jamaican farmers and consumers, especially:

-- Starchy food crops;
-- Edible legumes;
-- Cereals: maize/sorghum;
-- Pasture improvement; and,
-- Vegetables.

In summary, the need is for procedures to prioritize research to resolve problems of farmers and in support of national priorities, with the research exposed to rigorous economic testing on farmers' fields.

Background:

Agricultural research can have a profound impact on the national economy of an agrarian society like that of Jamaica where more than 60 percent of the population is engaged in agriculture. Properly organized and managed research sustained on a long term basis can easily have a cost/benefit ratio of 1:50 to 1:100. This is surprising when so much agricultural research is carried out in the public sector, a notoriously inefficient base for action programs. However, the enormous multiplicative potential of specific technologies, both well-researched and serendipitous, allows the research establishment to also carry a number of poorly planned, unproductive projects.

Jamaica is comparatively well off, at least by third world standards. The per capita GNP is US$1300, at least 4 times that of neighboring Haiti and more than any other Caribbean Basin or Central American country, except Panama. Moreover, the population is well fed with an estimated 2,300 to 2,600 calories and an average intake of 286 grams of animal and fish products per day (see Table 1). However, this standard of consumption is achieved at high cost. Imported foods and animal feedstuffs account for about half of total consumption.

The anomaly of the basic food shortage is that Jamaica is well endowed agriculturally. The climate is conducive to year-round cropping of both tropical and subtropical plant species (at different elevations); rainfall is generally adequate averaging about 2,000 mm per annum or there is considerable scope for irrigation; and the soils are relatively fertile, some of which are volcanic in origin, while others may be calcareous. Although virtually all cultivatable lands have been developed, yields remain unnecessarily low. Rainfed cereals average only 1.62t/ha, pulses 0.98t/ha, and roots and tubers range from about 11 - 13t/ha. It should be possible to double these production levels and to greatly increase cropping intensity to near 2.0, at least with shorter duration annual crops.

The Need

The need for research may be great, but the obstacles to creating internal capacity to generate needed technologies have been formidable. There are five major sources of frustration in helping to develop national agricultural research capacity.

Table 1: Estimated Per Capita Consumption of Different Food Sources in Jamaica (adapted and updated from a 1981 survey).

FOOD SOURCE	Total g/day	Caloric Energy Calories /day	Caloric Energy % of total	Crude Protein g/day	Crude Protein % of total
1. Cereals	218	789	33.4	22.2	30.0
2. Starchy Foods	303	337	14.3	5.9	8.0
3. Pulses and Nuts	12	47	2.0	2.7	3.6
4. Vegetables/Fruit	144	52	2.2	4.0	5.4
5. Meat products	122*	353	14.9	20.3	27.4
6. Fish Products	56*	87	3.7	14.0	18.9
7. Dairy Products	95*	62	2.6	3.3	4.5
8. Eggs (50/year)	13*	21	0.9	1.7	2.3
9. Fats and Oils	31	274	11.6	-	-
10. Sugars/Syrup	108	340	14.4	-	-
TOTAL	1102	2362	100.0	74.1	100.0

* These four equal 286 g/day.

(1) The Limited Economic Base: Jamaica is typical of many Caribbean countries with minimal production of a large numbers of commodities. Yet, they attempt to emulate the infrastructure of much larger countries; and donors have often attempted to model research institutions of much larger economic bases like those of Brazil or Mexico.

(2) Inappropriate Technology: New technologies often do not reach or are not appropriate for the majority of smallholder, subsistence farmers. Frequently, research programs are biased in favor of large, better capitalized farms. Medium to large farmers have better access to credits and other inputs necessary to adopt technology quickly. Moreover, they have better organizational and political linkages, and have a disproportionate influence in setting national agricultural research objectives.

(3) Weak National Research: The national research institution is very weak and problems of reforming it seem to be intractable. The major obstacles include: (i) low salaries, lack of incentives and archaic civil service regulations; (ii) a political rather than a scientific orientation in carrying out the program; (iii) lack of satisfactory procedures for setting priorities and establishing work ethics; (iv) inadequate and unpredictable budgets; and, (v) lack of integration between public and private sector research and between research and extension units.

(4) Inadequate funding: National funding for agricultural research is totally inadequate, unpredictable and erratically delivered. Moreover, even the available resources are often not applied to priority constraints, but are used for problem areas in which the dominant researchers are trained for and are most interested in.

(5) Lack of Trained Professionals: Jamaica has very few professionally trained scientists beyond the Bachelor's level. Although many nationals have been trained for higher degrees and/or were sent abroad for in-service training (mainly to IARC's), few have remained with MOA which is regarded simply as a training ground for more rewarding opportunities. Many have found roles with the private sector or have taken positions abroad with international or multinational agencies.

The Demand

Discussions with institutions currently involved in research in Jamaica brought to light the following concerns:

MOA R&D is very frustrated by the present situation of research in Jamaica. Nevertheless, they recognize that budgetary constraints and the departure of staff has greatly eroded their programs. They have hopes that the latest version of the proposed NARDI will resuscitate R&D programs. They stressed the need for a strengthened quarantine function and listed root crops, food legumes, corn/sorghum and tree crops (fruits) as high priority commodities for research.

The Scientific Research Council, now in MOA, has responsibilities for coordinating all research. However, the SRC is dependent on the GOJ for its entire budget (J$3.0 million) and is hard pressed to carry on its programs. Therefore, it is very interested in the proposed project. However, SRC will continue to set its own priorities. Special interests at present are tissue culture, testing of pigeon pea cultivars; studying legume inoculation,

raising mushrooms for export; and processing local foods especially shrimp.

The Food Technology Institute (SRC/FTI) concentrates on processing and utilizing local food products, especially meat products, low acid canning/preservation, and crop drying. It is very interested in the proposed project.

Agro 21's approach is very effective in market/entrepreneurial research and the divestment of GOJ lands. Although not directly involved in research themselves at this time, they recommended CARDI, IICA and several "mother" farms as possible groups for carrying out research under the proposed project. They also advocated encouraging all farmers to do a 'little research', if only on a few square feet.

Although the Coffee Industry Board claims to be doing no research at present, it has three agronomists and 'imports' technology, mainly from CATIE. Although they expect MOA R&D to carry out research, they also maintain long term contracts with UWI.

The Cocoa Industry Board does not rely on MOA R&D, but will be developing its own program, mainly at the Orange River station being divested by the MOA. They are currently planning a two-scientist team comprised of a plant pathologist and an agronomist. They rely on some external technology, especially for varietal improvement and mainly from the Regional Cocoa Research Unit in Trinidad. Cocoa R&D is scheduled to increase from 0.5 to 1.5 percent of the CIB budget. CIB expressed an interest in the proposed project, but will not require external assistance.

The Coconut Industry Board's highly successful research program has resulted in virtually replacing all Jamaican tall trees (susceptible to lethal yellows) with Malayan Dwarf and Maypan varieties (developed by CIB). Other important technology advances include: optimal populations (85-115 trees/acre), fertilizers, terracing, associated cropping (cacao & pastures), irrigation and weed control. The CIB is currently working on budrot, mites (studied at UWI), tissue culture, and phenotypic studies. Although CIB has three senior scientists, it urgently needs lab equipment and indicated a need for support for high priority studies in collaboration with institutions abroad (e.g. U.S. universities). It was very interested in the proposed project.

JADF, the identified implementing agency, is supportive of the proposed project to the extent that they would be willing to seek a long term endowment for research.

CARDI is currently working on applied research in several commodities, mainly on farmers fields: edible legumes, coffee

borer, small agriculture machinery, chipping and drying cassava, multi-eared maize (local O.P.), tomatoes, sweet potato, topworking mangoes, and watsonia (a fiber for handicrafts). They are very interested in the proposed project.

The FAO expressed concern over the 'crumbling' of the MOA's research efforts and agreed that research in Jamaica urgently needs support. They felt that the proposed NARDI may be a start in right direction. In addition, they were of the opinion that research on export crops should be supported by a cess or matching grants.

IITA is currently involved in an applied research project that is patterned along the lines envisaged under the proposed project. It involves a revolutionary new technology for rapid propagation of yams which can easily double farmers income from this crop and has evoked much farmer interest. Unfortunately, IITA is constrained by a project termination date of March 1987. However, the current annual cost of US$170,000 may be taken over by CIDA.

IICA is carrying out an effective program of farming systems research focused on areas around Guy's Hill, but MOA collaborators are difficult to retain. IICA is very interested in collaborating with the proposed project as a contractor; its major interests are in root crops, edible legumes, forage legumes, and pastures.

Methods of Prioritization

Tropical countries like Jamaica have a virtually endless list of agricultural commodities and researchable problems that need study. The problem is to carefully choose the commodities and problem areas that will have greatest overall benefit to the country and its people. The following criteria may be useful in making reasoned judgements on research proposals:

1. Benefits the greatest number of people, and the national agricultural economy in terms of increased income and overall employment.

2. Reduces or substitutes for imports thereby conserving foreign exchange and contributing to national food security.

3. Considers current and long term trends in production, consumption and use.

4. Contributes to productive efficiency and increased farmer income and alleviates onerous, debilitating toil, and cost of production.

5. Addresses a major constraint to increased production and use (justified by careful analysis of the problem).

6. The problem is researchable within the limits of available scientific expertise and facilities; and there is or likely to be long term commitment to the commodity and its problems.

7. Good backup support is available from various sources, especially from international and regional centers.

8. The commodity and problem area are not already capably dealt with by existing programs or would not be supported by other means.

9. The expected technology product would be readily accepted by client farmers and consumers and will not increase costs of production.

10. The proposed technology will not exacerbate degradation of the environment; but conversely, could help sustain or improve the resource base.

These ten points are not necessarily listed in order of importance since various criteria assume greater importance under different circumstances. For example Item 8 would guide the consideration of proposals on export crops already supported by a market cess and through direct support from the IADB to the export commodity boards. It should also be noted that any research, regardless of how elegantly carried out, is of little use unless the primary client, the farmer accepts it (Item 9).

There is always a temptation to support a wide range of commodities and problem areas, often simply because good scientists want to work on them. However, Jamaica's interests will be better served if support is focused on several aspects of a relatively few commodities rather than on only one or two problem areas in a large number of commodities. This will result in a multi- disciplinary approach to biological research and ultimately the most efficient system. There is, of course, a saturation limit when improvement of a single commodity or problem area will not advance any faster regardless of how much additional resources are invested. Moreover, some problems are interrelated and it may be expedient to defer work on certain aspects until the primary problem area is resolved. For example, it would be imprudent to carry out a costly sequence of agronomic trials on a new variety lacking an essential character preventing it from being accepted by growers.

Prioritization of Commodities

Once the staff and the RAC are selected, the first major implementation task is to set research priorities. The importance of this task cannot be over-emphasized. To be successful the program must focus on a limited number of commodities and problem areas. Too many priorities will result in fragmented research and not sufficient attention to key problems. Much greater impact will be made by addressing multiple problem areas affecting a few commodities rather than scattering support across the full gamut of programs. The latter policy is likely to do little more than extend the life of an already moribund institution. It is easier to add priorities later than to end marginally useful contracts that have developed a demanding constituency.

The most urgent need is to resuscitate national research programs in high priority basic commodities. It is proposed to accomplish this objective through grants and contracts with agencies and institutions operating on the Island but which are not regulated by GOJ edict. The most promising areas/commodities for Jamaica are those contributing a high proportion of daily nutrition and which require considerable foreign exchange for importation. These are also commodities of major concern to smallholder subsistence farmers and poor urban consumers.

Five commodity groups are recommended for attention during the initial years of the project: (1) starchy food crops (especially yams), (2) food legumes, (3) cereals (especially maize and sorghum), (4) pastures and forages, and (5) horticultural crops.

It is also recognized that Jamaica can grow a wide range of tropical crops with excellent potential for export and that judicious and timely interventions might have a significant impact on the national economy. However, many of these specialty commodities like tropical fruits, spices and condiments, ornamentals, and winter vegetables are both market-driven and speculative. That is, they often require considerable market research; the infusion of foreign capital; availability of unique inputs; and development of special collection, handling, processing and transporting facilities.

Interest in these volatile commodities tends to wax and wane with the times depending on perceived market opportunities and productive advantage over the competition e.g. more favorable growing environment, getting a headstart on production, ability to produce earlier or in the off-season, better accessibility to the markets, and other factors. However, biological research, requiring a long lead time and reasonable stability, does not function well in this situation and is unlikely to be cost effective. A better approach to dealing with these more

opportunistic ventures is via Agro 21 which is particularly well-equipped to evaluate the markets, solicit the interest of potential entrepreneurs, and make searches of the available technology. The IBRD-sponsored Export Development Project is specially designed to do some of the initial exploratory research and sometimes, entrepreneurial resources (including Commodity Boards) are also available to help develop export commodities.

A preliminary subjective analysis of these commodities as shown in Table 2 may be useful in determining priorities for support. The overall assessment rating is based on several considerations: (i) current importance of the commodity in the daily diet, (ii) national production and imports, (iii) national commitment and researchers assigned to the crop, (iv) availability of backup support and technology, mainly from IARC's, (v) suitability for the Jamaican environment and need, and (vi) possibilities for making a rapid impact.

(1) Starchy Crops

This priority is improving starchy food crops, with major emphasis on yams. Although the backup technology for yams is not as advanced, there are excellent prospects for increasing yields and easing some of the laborious production practices. However, rapid gains could also be made on cassava, sweet potato and Irish potato which are primary commodities at CIAT, IITA, AVRDC, and CIP.

The program on starchy crops (mainly yams and sweet potatoes) could be implemented by continuing the IITA (Dr. V. L. Asnani) project for the next three years (3/1/87 to 3/1/90). However, CIDA has already indicated an interest in funding this project. Besides the exciting work on yams, Dr. Asnani is also doing some preliminary evaluations on sweet potato; but cassava and the aroids (cocoyam and dasheen) would require additional support. Irish potato is already included in IICA's Farming Systems Program (V. Chin).

(2) Edible Legumes

Both human nutrition and farming systems would improve with increased production and consumption of pulses. Moreover, there are good sources of backup technology, particularly for red peas (CIAT and bean/cowpea CRSP), gungo peas (ICRISAT UPR and UWI-Trinidad.), peanut (ICRISAT, Peanut CRSP, and UF), and cowpea (IITA and bean/cowpea CRSP).

(3) Cereals

High priority is assigned to cereals, particularly maize or corn and, to a limited extent, sorghum. This commodity group is used both for direct human consumption and as the primary ingredient of livestock rations.

Maize and sorghum technology is readily available from CIMMYT (that center also carries a sorghum project for ICRISAT). However, local conditions and special problems inherent in growing these two crops should be assessed by a senior maize scientist from CIMMYT in a short visitation to Jamaica prior to mounting a

Table 2: Subjective Analysis of Prospects for Improving Annual Food Crops in Jamaica

COMMODITY	Production		Consumed Directly			Crude Protein		EXTERNAL BACKUP TECHNOLOGY 2/		OVERALL ASSESSMENT ON PROSPECTS FOR IMPROVEMENT 2/3/
	(000ac)	(000st)	g/day	Calories per/day	%	g/day	%	Quality	Sources	
Starchy Food Crops:	55.2	280.5	303	337	14.3	5.9	8.0			***
- yams (8 cvs/spp.)	26.3	150.1	162	170		3.9		**	IITA-UPR	****
- cassava	4.8	24.1	26	38		0.3		***	CIAT-IITA	***
- cocoyam/dasheen	6.0	31.1	34	36		0.6		*	UH-UF-UPR-IITA	*
- sweet potato	6.7	33.3	36	42		0.5		***	AVRDC-IITA-LSU	***
- Irish potato	3.2	15.2	16	13		0.3		***	CIP-AVRDC	***
- Plantains	5.2	26.6	29	38		0.3		N	-	*
Legumes:	25.2	11.1	12	47	2.0	2.7	3.6	-		**
- Red pea	11.0	4.7	5	17		1.1		****	CIAT-CRSP's	***
- Gungo pea	6.6	2.8	3	10		0.6		***	ICRISAT-UPR	**
- Peanut	4.2	2.3	3	17		0.8		***	NCSU-UF-CRSP's	**
- Other	3.3	1.2	1	3		0.2		***	IITA-AVRDC-CATIE	*
Cereals: 1/	9.5	7.1	218	789	33.4	22.2	30.0	-		****
- Corn	7.7	5.0	-	-		-		****	CIMMYT-IITA	****
- Rice	1.8	2.1	-	-		-		****	IRRI-CIAT-IITA	**
Vegetables	24.4	120.5	130	46	1.9	3.9	5.3	***	AVRDC-UF-CATIE	**
Fruits	2.0	12.9	14	6	0.3	0.1	0.1	**	UF-UH-CATIE	*
Meat/fish/milk/eggs	-	-	286	523	22.1	39.3	53.0	***	CIAT-UF-CATIE 4/	****
Fats/oils/sugar/other	-	-	139	614	26.0	0	-	-	-	-
TOTAL	-	-	1102	2362	100.0	74.1	100.0		-	-

1/ Not including imports totalling 403,000 tons for both animal feedstuffs (ca. 208,000 tons) and human consumption (ca. 202,000 tons).
2/ N = none; * = some/poor; ** = intermediate; *** = good; **** = excellent.
3/ Considering that only 2 MOA scientist are assigned to starchy food crops; 6 scientists are assigned to rice; and 5 scientists are assigned to legumes.
4/ Mainly pastures improvement

research program on them. If the conclusion is positive, germ plasm and production technology would be introduced directly from Mexico and initially grown out at Bodles to determine which genetic stocks and production practices would be suitable for Jamaican farmers. Simultaneously, local germ plasm and land races of maize would be collected and merged with introduced elite materials to ensure adaptation to Jamaican growing conditions. At the outset CIMMYT and other genetic materials and hybrids would go directly into farmer's field trials from the first growout at Bodles. By the second or third year the initially merged exotics with locals should be ready for testing around the Island.

There is also scope for improving and expanding rice production, but rice improvement is already reasonably well-established. Rice is less important than maize, the production technology is well-known and can be adopted directly, and expansion will depend on availability of suitable lands, especially as a substitute for sugarcane.

(4) Animal Nutrition

High priority is also given to pasture improvement as the most relevant approach to increasing production of animal products, reducing imports, and improving the farming system. There is also considerable improved technology available for transfer and adaptation from several sources. However, good husbandry and health practices must accompany improved nutrition to fully realize the potential improvement, but this area should not require a research input as the technology is already well known. Training would be done at CIAT for pastures.

(5) Horticultural Crops

Local consumption of vegetables and condiments may already be near desirable levels; but there should be considerable scope for export of both temperate and tropical species to North America and Europe, especially fresh vegetables in winter. Although fruit consumption within the country is comparatively low (only 14 g/day/caput) there should also be good opportunities for export of tropical species especially pineapple, citrus, mango, papaya, guava, lychee and others. Since handling and marketing are crucial with these highly perishable horticultural crops, it would be best to develop specific commodities in concert with external distribution agencies. However, other sources of research support (Agro 21, IBRD) are available and should be exploited first. Future production increases are likely to be exported.

(6) Plantation and Export Crops

The major plantation or export crops like sugarcane, bananas, coffee, cacao, citrus and coconut have generally fared well in terms of improvement until recently since the GOJ has accorded them priority as primary sources of foreign exchange. However, softening markets, oversupply, and economic depression have adversely affected production and the revenue base (via a cess on exports) for improvement. Nevertheless, the international prices of coffee and citrus have recently strengthened as a consequence of the frosts and drought on coffee in Brazil; and hard freezes in the citrus belts of Florida and Texas. The IBRD funded Export Development Project is expected to provide for adaptive research through the commodity boards. Among the several export crops, those included in small holder systems and in more fragile, hillside ecologies like coffee, cacao, coconut, and pimento are particularly deserving of attention and support.

(7) Traditional Food Crops

Some overlooked but nevertheless significant sources of nutrition and key components of traditional dishes are breadfruit (*Artocarpus altilis*), plantains (*Musa paradisiaca*), and ackee (*Blighia sapida*). These crops are perennials and of particular importance to smallholder farmers. Plantains are consumed at the rate of 29 g/day/person (38 calories). Estimates of breadfruit trees run as high as 2.2 million (about 1 tree per person) with annual consumption of 16 kg/caput (44 g or 36 calories and 0.6 g of protein per day). Being perennials these crops are more important locally especially during lean periods and make a significant contribution to stabilizing farming systems, especially in fragile ecologies. Very little if any research has been done on these neglected species so that even modest investments on exploratory studies could pay off handsomely.

(8) Vegetable Oils

The production of vegetable oils on the Island is very low and particularly since the production of coconuts declined from 155.5 to 104.6 million nuts during the first 5 years of the 1980's. Other obvious sources of veg oils like peanuts (2.3T tons), cottonseed, and locally produced soybeans are hardly significant considering the potential need both in Jamaica and for export. Over the longer term the African oil palm may prove to be superbly adapted and a highly lucrative crop for the Island.

Techniques for Setting Priorities

To set priorities, the PD and the RAC must objectively and accurately identify those research problem areas most deserving of support based on needs of the farmer-producers, consumers, and the national economy, with the assistance of agricultural economists or other expertise as needed. To ensure that all voices are heard on the RAC, it may want to consider special techniques during the annual meeting.

There are at least three procedures to analyze and prioritize problem areas: (1) open discussion on a prepared agenda seeking a final consensus, (2) systems analysis, and (3) nominal group technique. Some of the advantages and drawbacks of each procedure are further discussed below.

(1) Open Discussion on a Set Agenda: An unstructured open discussion of a topic is the simplest and most straight forward procedure. However, important new information may be omitted, certain personalities tend to dominate, collective wisdom is poorly tapped, and the final conclusions may be compromised. Therefore, efficiency is low.

(2) Systems Analysis (Furtick-Hawaii): This process, Systematic Commodity/Resource Analysis for Development (SCRAD), involves the selected group members (eg. major decision makers) in a three-step structured procedure to identify major constraints and their proposed solution within a specific industry, commodity or cluster. The first step is for a group of experts to identify key constraints limiting development of the industry or commodity. The preliminary analysis is then circulated to all parties in the public and private sectors with a special interest in the topic for their study and comment in writing. Based on these, a revised worksheet is returned along with an invitation to a public meeting for discussion and setting of priorities on the most limiting constraints and what can be done to overcome them. Based on this meeting a final worksheet is prepared that also identifies members of a task force selected to develop action plans to address the constraints identified and assigns responsibilities for each aspect of the plan. The action plan also lists resources agreed to by participants and shortfalls requiring supplemental funding, expected time frames, and key indicators needed to monitor implementation. This version of the plan is then brought before the Committee for final discussion and approval.

(3) Nominal Group Technique: This technique is a type of systematic analysis similar to SCRAD, but it is less complicated, time consuming and expensive. It has recently gained favor in corporate meetings and at international commodity research conferences. The process can normally be completed at a two-day sitting, and consists of the following steps:

(i) Each participant independently lists all possible constraints to a particular commodity or subject area.

(ii) The master list of constraints is reviewed by all participants who independently assign priority numbers in descending order of importance.

(iii) The results from step (ii) are summarized and discussed by the group until the top 6 to 10 constraints are identified.

The second phase of this exercise is to identify, prioritize, and recommend solutions to each of the major constraints following a similar sequence of steps.

Administration of Research Contracts and Grants

This is the action part of the Project and will consist of grants for specific research proposals and contracts when longer term program support is needed. The purpose in offering grants and contracts is to ensure that high priority research is carried out, to accelerate the improvement of selected commodities, and to demonstrate efficient applied research procedures. Grant proposals would normally be for one year, but may be extended if progress is satisfactory. Contracts would normally guarantee support for a two or three year period subject to annual review, and be eligible for an extension.

The role of JARP in researching new or existing export commodities may be a varying one. Insofar as possible, other agencies and programs designed for this purpose should be tapped first. The JARP should focus mainly on less volatile, established commodities where greater investigational depth is required over a comparatively longer period, and rather specific biological problems need to be addressed.

(1) Grants

Commodities, such as vegetables, fruits, animal husbandry (including dairy), aquaculture and post-harvest technology/processing (particularly crop drying and cassava chipping/drying) would receive attention mainly through grants to existing institutions and individuals, both public and private, and for short term technical assistance. Support may also go to export crops, particularly when they are integral to farming systems involving the major food crops. However, in cases where such support would involve the commodity boards and/or the GOJ, it should be done on a matching basis.

(2) Contracts

These are on-going projects carried out as contracts with agencies like IICA, or CARDI. They would, of necessity, be based on lower level staff (e.g. young B.Sc's) operating under the overall direction of senior scientists, the contractors. Typically, such projects would feature initial training of 1 to 3 junior professionals at an IARC or CRSP at the end of which a senior scientist from that institution would return to Jamaica with the trainee to help establish the new field program.

Ongoing applied research activities on maize, pastures and legumes would be contracted through an appropriate, non-governmental agency or PVO with close links to national research stations, especially Bodles. Existing entities that might serve as contractors include IICA, CARDI, or one of several external agencies. The most efficient approach to a commodity improvement program will be in close collaboration with an IARC. In addition, the research contractors will not undertake the more sophisticated aspects of biological research; therefore, higher degree training will not be essential. However, as necessary, short term training will be provided, mainly at appropriate IARCs especially (CIMMYT, CIAT) and CRSP programs.

If the proposed project is established in 1986 it would be possible to contract for maize/sorghum and pastures projects in 1987, assuming that the yam program will be continued from other sources. Then, food legumes and horticultural crops could be deferred until 1988 or 1989.

These research activities will operate under the overall direction of a well qualified contractor but will be closely linked to the appropriate IARC. The project will begin with the selection of a well qualified and motivated young researcher (i.e. a recent graduate from UWI) who will be sent to an international center for 3 - 6 months of training. In the case of maize it is proposed that two researchers be trained at the outset, one in varietal improvement and the second in cultural practices/management. Concurrently, the contractor will negotiate with a senior CIMMYT staffer for a short term assignment (eg. 2 - 4 months) coinciding with the return of the trainees.

The field work will be started on the return of the trainees. Headquarters will be established at Bodles where the new technology and germ plasm introductions will be tried first. However, most of the trials and 70 to 90 percent of the program will be carried out in farmer's fields and in close collaboration with Farming Systems Research. Thus, major emphasis will be given to validating, adapting and fine tuning introduced technology. A special line item in the project budget provides for upgrading

facilities at Bodles necessary to introduce new technology and conduct certain preliminary studies.

(3) Networking

The purpose of networking is to use existing research resources to their fullest capacity. The general concept embraces many institutional arrangements, from sharing of knowledge and publications among groups, to informal research networks, to full fledged collaborative research. Networking can be developed between individual researchers or between institutions. It can be an appropriate mechanism for generating and disseminating technology among researchers, extensionists, and/or educators. The more limited the capacity to undertake research, the more important networking is to access technology from other sources.

Primary foci for regional networks in the Caribbean are the three IARCS (CIMMYT, CIAT and CIP), IICA, CARDI, CATIE, Bean/Cowpea CRSP, Peanut CRSP, and the Sorghum/Millet CRSP. Other institutions with potential roles in networking in the region include the Universities of Florida and Puerto Rico (the latter includes the USDA Federal Station at Mayaguez -- Dr. F. Martin).

The proposed project and its donors (AID) should encourage the participation of Jamaican researchers in networking, particularly in those networks most important to priority commodities. These are likely to involve root and tuber crops (CIAT and UPR), maize/sorghum (CIMMYT), red peas and cowpeas (CIAT, IITA and the Bean/Cowpea CRSP), peanuts (UF, ICRISAT and the peanut CRSP), tropical pastures (CIAT), and winter vegetables (UF). Perhaps one of the best examples of an effective network is PRECODEPA, the Central America/Caribbean Potato Program. Other networks operate more paternalistically, but can also be effective.

Effective participation in networking implies not only the means to attend meetings, collaborate in trials, and exchange information, but also to have capacity for both contributing to and exploiting the information and technology flowing from these networks.

(4) Expanding the Testing Base

The twin problems of expanding the testing base and transfusion of technology with minimum research staff and in the absence of an effective extension service has resulted in the formulation of an innovative scheme whereby adopter farmers are enlisted in carrying out simple trials in other farmer's fields.

Under appropriate circumstances and with appropriate incentives provided, certain farmers may be able to assist the applied

researcher in multiplying the number of observation/testing sites and in effect transferring technology. The stepwise procedure of how this might work is described below and illustrated in the attached figure.

SCHEME FOR SELF-REPLICATING ON-FARM TRIALS

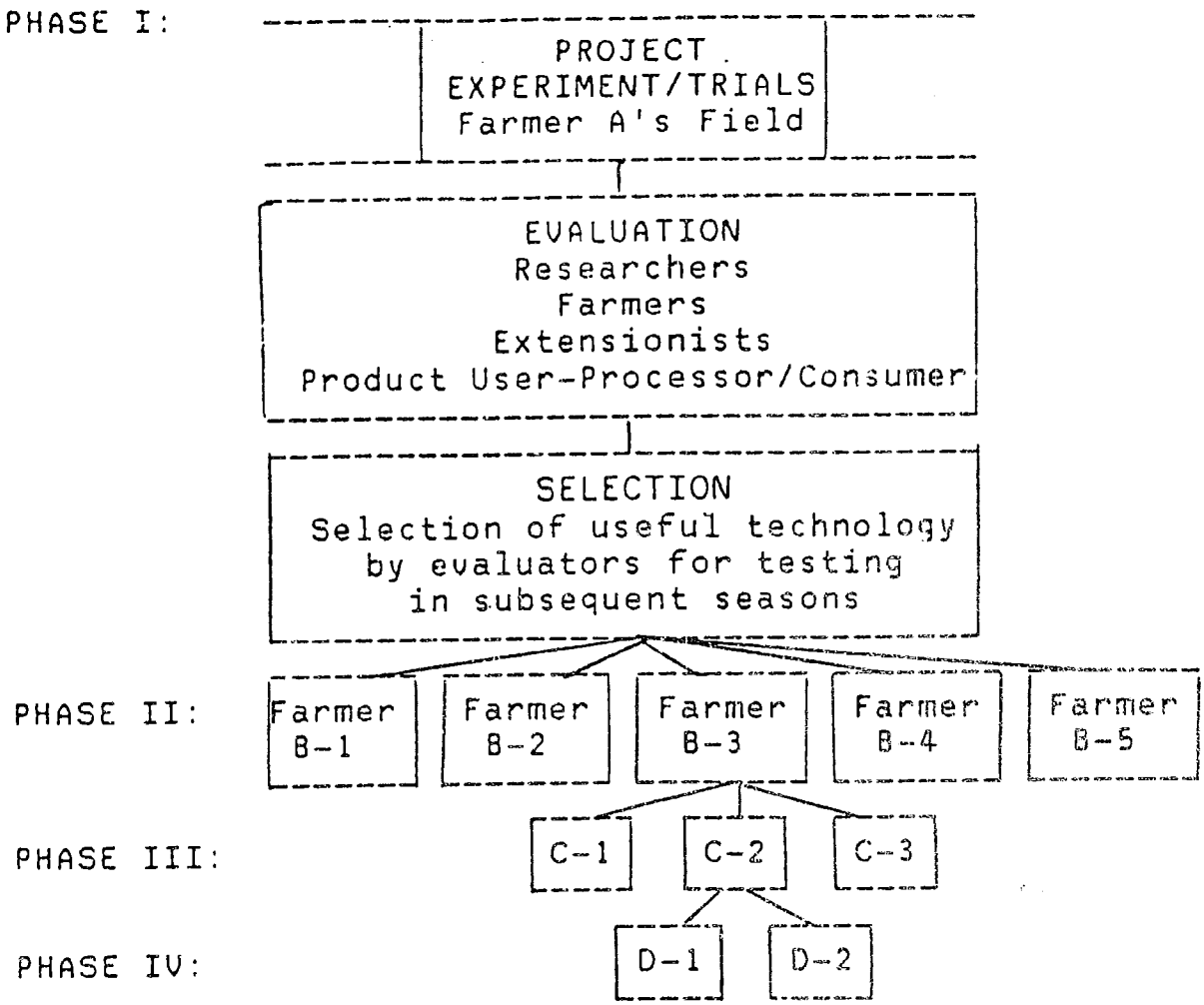

PHASE I:
1. Professional conducts trial on farmer's field in cooperation with farmer.*
2. Seeds and material built up.
3. Trials are simplified.

PHASE II:
1. Farmer A conducts trials on "B" farms under supervision. Receives seeds and inputs.*
2. Trials further simplified.
3. Extensionists provide liaison and assist farmer.
4. Distance requirement may be reduced.

PHASE III:
1. Farmer B trained and supervised by Farmer A to conduct C trials.
2. Trials further simplified.
3. Extension involved (as above).

PHASE IV: Similar to PHASE III.

* Trials must meet minimal distance requirements (i.e. 2 - 3 miles).

** Seeds and possibly fertilizer/chemicals supplied by Project.

*** Farmer A to be compensated for time, travel and material.

Phase I: Scientist conducts a trial or experiment in a farmer's field, evaluated by researchers, extensionists, farmers, and product users (processor/consumer). Promising technology is selected jointly, and seeds or other materials are built up for the next growing season. Depending on the level of confidence in the outcome, the trials may have been preceded by trials on a research station.

Phase II: Selected technology is included in a simple design (compared with local practice) and carried out at 5 or 6 other farms at prescribed minimum distance from the original or other 'prime' farmer/cooperator appropriately compensated for his effort. The scientist would train and partially supervise the farmer conducting these trials. He would also, when possible, participate in recording data and evaluation.

Phase III: Each of the 5 or 6 selected farmers participating in Phase II would be requested to carry out a further simplified trial at 2 to 4 new farms at prescribed minimum distances as described under Phase II. However, the researcher would have little direct control over these tests except through brief visitations at critical stage(s). Of course, extensionists (if available) could have an important role both in identifying new testing sites, training, and otherwise assisting the farmer/tester.

Phase IV: Several of the 10 to 24 new farmers participating in Phase III could be 'induced' to further expand testing according to the same procedure described above.

This scheme, it must be stressed, is experimental for Jamaica and would probably need considerable adaptation for conditions in different parts of the island. Incentives for participation would be the provision of inputs and the crop at harvest time. An additional incentive may be considered during Phase I and II testing (when greatest risks and efforts are required); however, this would not be needed in Phases III and IV. At this time it is not possible to determine a formula nor mode of payment, but a promising research grant or contract could be supplemented to initiate expanded filed testing.

Another approach is the 'nucleus estate' or 'mother farm' method. A large centrally located farm in a defined area (with similar growing conditions and reasonable distance from the smaller satellite farms it serves) provides land and facilities for adaptive research which can readily be observed by the farmers in it's sphere of influence. The 'mother farm' can also expand it's role to provide needed inputs like improved seeds, fertilizers and agricultural chemicals.

Of course, agribusiness and the media (especially newspapers, radio and television) can be very helpful in the campaign to test and spread technology. Fortunately, the Jamaican newspapers and radio are already deeply involved. However, it may also be worthwhile to consider a national campaign urging every farmer to do his own experimenting, even if only on a few square feet of land. Once farmers are imbued with the potential for new technology the transfer process will move much more quickly.

(5) Human Resource Base

The following levels of research staff were reported by the institutions surveyed. MOA R&D has suffered heavily from budgetary constraints and the departure of staff; however, the crops and livestock divisions each have five trained professionals (including one Ph.D. each). Although the Coffee Industry Board claims to be doing no research at present, it has three agronomists. The Cocoa Industry Board currently has a Ph.D. agronomist as head of their growers service unit and is planning to expand their research capability by adding a plant pathologist and an agronomist. The Coconut Industry Board has three senior scientists. The Food Technology Institute (SRC) has five trained staff members.

Junior staff under the research contracts would be drawn from the pool of recent graduates (Jamaicans) from UWI with degrees in Agriculture.

Table 3: Recent Jamaican Graduates from UWI with Degrees in Agriculture

	1980	1982	1983	1984
First Degree (B.Sc.)		21	31	12
Master Degree (M.Sc.)	1	2		2
Ph.D.	1	2		1

Although the pool is small, the relatively small demands by the project, combined with the current contractions in the MOA labor force, should not result in the project pulling manpower from other priority areas of endeavor or a lack of staff to undertake the project.

Another source of agriculturally trained assistants are the graduates of the College of Agriculture who have received considerable practical training during the three-year programs for which they receive a two-year certificate (AA degree equivalent).

Budgetary Implication: Contracts and Grants

The research aspects are allotted $5,560,000 of which $4,710,000 will be available for grants and contracts. While it is not possible to identify grants since these will be specific problem oriented, a tentative estimate of the commodity project contracts can be made. It is assumed that the five major commodity projects will include starchy foodcrops, food legumes, cereals, pasture improvement, and vegetables. In addition, it is assumed that the existing project on yam and sweet potato will be carried by IITA until March 1987 and on other funding source (e.g. CIDA?) will be provided for the next three years, 1987-90. Each project will have one to three junior professionals (young B.Sc.'s), equipment and operational expenses.

The research contracts, as outlined above, would require salaries for junior professionals, some minimal equipment, a small pickup, labor, local travel, vehicle maintenance, supplies, and miscellaneous expenses including publication of results. First year costs would be the largest as it would include the initial training vehicle and equipment costs. A detailed breakdown of an average contract cost is shown in Table 4.

Table 4: Breakdown of Costs Required for Contractual Research Projects in Jamaica Based on IICA Salary Levels and Operational Estimates

	CATEGORY	COSTS: US$'000 First Year	Second Year	Third Year	TOTAL
1.	Junior professionals - B.Sc. level (2)	21.6	23.5	25.0	70.1
2.	Labor	5.5	6.0	6.0	17.5
3.	Inputs + operations	6.0	6.5	6.5	19.0
4.	Local travel + vehicle maintenance	4.0	4.0	4.0	12.0
5.	Publications - reports	1.0	1.0	1.0	3.0
6.	Small 4WD pickup, diesel	8.0	-	-	8.0
7.	Field equipment, instruments	5.0	0	0	5.0
	TOTAL	51.1	41.0	42.5	134.6

The commodity contracts should run for three years pending favorable annual reports; and be eligible for extension as indicated by the progress being made. The first such contract, perhaps for root crops, should be initiated by mid 1987. The edible legumes (primarily red peas and gungo peas) project could be initiated later in the year; cereals (maize/sorghum) could begin in 1988 or 1989. About the same time or somewhat later (1989/90), a similar but more modest project on pasture improvement and a horticulture project focused on one or more of the important vegetables like pumpkin, tomato, cabbage, carrot and/or calaloo could be established.

Besides these more important crops, there may be special interest in other commodities, especially cassava, the aroids (coco yam and dasheen), plantains, rice, peanuts, spices/condiments, fruits, ornamentals and various animal management and nutrition problems. Since the level of importance is lower and duration of interest on these problem areas is likely to be shorter than for the other commodities grants and short term TA may be the most appropriate support for them.

As shown in Table 4 above, first year costs of a typical 2-professional team is estimated at U.S. $51,100; while second and third year costs would be $41,000 and $42,500, respectively. On this basis, the seven-year contractual costs are shown in Table 5.

This level of commitment for on-going projects would still allow considerable scope for grant proposals, i.e. $3,515,700. Grant requests should not be for a fixed amount, but should have a reasonable cap. e.g. J$80,000. Mainly they would support a proportion of recurrent costs like salaries of temporary junior professionals or post-graduate students, labor, travel, supplies, land rental and small equipment/instrumentation. They would not cover salaries of permanent staff, large vehicles, permanent construction, overseas training, technical assistance or major equipment purchases. Overseas training and short term TA are provided for in separate budgetary line items. If one-year grant requests range between J$40,000 and J$80,000 averaging J$64,800 (US$12,000) a total of 293 grants or 42 per year could be awarded during the six-year life of the JARP. However, after the first year some of these grants would be continuations or variations of prior work.

Table [illegible]. Proposed Annual Costs for Commodity Research Contracts
(US$000)

	PROGRAM	1986/87	1987/88	1988/89	1989/90	1990/91	1991/92	1992/93	TOTAL
1.	Starchy Crops	51.1	41.0	42.5	44.0	46.0	48.0	50.5	323.10
2.	Edible legumes	-	51.1	41.0	42.5	44.0	46.0	48.0	272.60
3.	Cereals (maize)	-	-	31.0*	32.0*	42.5	44.0	46.0	195.50
4.	Pastures	-	-	51.0	41.0	42.5	44.0	46.0	224.60
5.	Vegetables	-	-	-	51.0	41.0	42.5	44.0	178.50
	Total	51.1	92.1	165.5	210.5	216.0	224.5	234.5	1194.30

* One junior professional for the first 2 years.

Budgetary Implications: Equipment

Staff at Bodles indicated that the following equipment and station development would be required to rehabilitate Bodles Experiment Station for crops and livestock research.

	J DOLLARS	= US DOLLARS at J$5.47/US$1
(1) Crops Research (R.J. Baker):		
LABORATORY:		
Set of glassware (calibrated)	J$25,000	
Standing pH meter	5,100	
Furnace + crucibles	3,716	
Five core samplers @ $60.00	300	
Miscellaneous laboratory supplies	26,000	
	J$60,116	11,133
FIELD EQUIPMENT:		
1 Hand tractor Nibbi G519 and attachments	40,000	
5 Mist blowers @ $2,500 ea.	12,000	
5 Knapsack sprayers @ $650 ea.	3,250	
1 Power Saw	2,500	
1 Thresher (sorghum)	12,000	
	79,750	14,769
OFFICE EQUIPMENT:		
1 Statistical personal computer	20,000	
1 Photocopying machine	35,000	
	55,000	10,185
FENCING OF AREAS:		
Complex - (near Railway Line) 3,300'	59,561	
Thirty acre block - 3,900'	69,796	
	129,357	23,955
	J$324,223 =	US$60,042

	US DOLLARS
(2) Livestock Research (P. Jennings):	
LABORATORY:	
1. Shaker water bath for in vitro digestibility analysis	2,000
2. Centrifuge tubes and stoppers for inoculating herbage samples (48)	450
3. Cannulae for fistulating sheep (12)	1,000
FIELD EQUIPMENT:	
1. Electrical sheep shears plus 6 blades for harvesting herbage samples	200
2. Portable electric generator to operate electric shears	2,000
3. Electrical fencing unit complete with insulators, stakes and energizer	3,500
TOTAL	US$9,150

Evaluation of Proposals

The basic guidelines for making research grants and contracts follows the criteria for priority selection of commodities and research problems described above and the criteria for evaluating research proposals described below. However, the question of researchability in Jamaica and how to determine who is best qualified to carry out the investigations have not been considered. One of the first responsibilities of the PD and the APD will be to become familiar with the different research institutions and their staff to make reasoned judgements on awarding grants and contracts.

The kinds of research most likely to be encouraged are those projects addressing critical constraints to increasing production and use of high priority commodities. These will frequently involve experiments and trials designed to increase yields, improve product quality, reduce pest damage, expand adaptation, and reduce costs of production. The improvement of most agricultural commodities is necessarily complex and requires advance across a broad front of biological problems. Thus, a multi-disciplinary team approach involving closely integrated studies on varietal testing, management trials (eg. planting,

fertilizer trials), pest control, and product handling (like crop drying) carried out on the same commodity grown under real farmer's conditions is the most effective strategy. Therefore, whenever possible, appropriate inter and intra-institutional arrangements should be encouraged through a combination of grant and contract support.

Prospective grantees should be apprised of the criteria to be applied in judging their proposals. They will then need to prepare their proposals according to a prescribed format. Formats differ depending on need, but they should include certain basic components:

-- Title: brief description of the proposal

-- Preamble: A few lines describing the project's objectives, when and where it would be carried out, who and what is involved and overall costs.

-- Principal Investigators: A list of persons responsible for carrying out the investigations; may include technical assistance.

-- Justification: description of the problem area and why it needs attention here and now.

-- Literature Review: a brief review of current literature on the subject.

-- Prior Investigations: A brief description of previous work done on the same topic by the principal investigators.

-- Project Requirements: A description of the experiment stations, farmer's fields, laboratories, and glass houses, equipment, instruments, salaries, labor, transport, contractual arrangements, and other essential needs to carry out the project.

-- Proposed Budget: A breakdown of costs connected with carrying out the project based on project requirements described in the previous item, "Project requirements". This should show contributions from different funding sources including in-kind contributions, eg: MOA, Commodity Boards, JARP, and other donors.

-- Plan of Work: A description of how, when and where the investigations will be carried out, who will do them (if more than one principal investigator), and the basic methodologies to be used.

-- Expected outcome: A description of the 'end product' of the research, how it will be useful, and the time frame for completion.

-- Biodata of principal investigators: This should include training, experience, a list of recent publications, and other pertinent information.

Preparing acceptable proposals depends on experience (known as grantsmanship). However, good writers are not necessarily good executors. Therefore, it will be important for the proposed project Program Director and the APD to know personally the grantees, their capabilities, limitations, and the likelihood of success in different problem areas. It will also be desirable to help develop the first proposals, and counsel grantees on which approaches and methodologies are likely to succeed.

ECONOMIC IMPACT OF NEW TECHNOLOGY

New technologies in agriculture have two types of impacts. They either reduce the cost of producing a unit of the product or they improve the quality of the product. Cost reducing technologies include new higher yielding varieties of crops or improved animals; more efficient pesticides, fertilizers, machinery, and animal feeds; or management practices that reduce the cost of production.

The economic impact of a cost reducing innovation is shown in Figure 1. The reduction in cost shifts the supply curve downward from S to S'. If markets are competitive and the demand curve is downward sloping, farmers will increase production to Q', and this will reduce the price of goods to consumers from P to P'. The result is that consumers will be better off because the price of the good is reduced. Their gain in welfare is measured by the area a + b. Farmers in aggregate will be better off if the gain in producer surplus due to the reduction in cost (area c) is greater than the reduction in producers' surplus due to the reduction in price (area a). The total economic gain to society is area b + c.

If cost reducing technical change takes place in a small, open economy like Jamaica's and the commodity is a traded good, the demand curve will be almost horizontal, and the benefits will all go to the producers. In Figure 2, D_j is the local demand curve, and D_{row} is the demand of the rest of the world for the Jamaican commodity. The cost reduction will shift the supply curve from S to S', increase production from Q_t to Q'_t and increase exports from $Q_t - Q_j$ to $Q'_t - Q_j$. This will improve the foreign exchange situation, but there will be very little impact on consumer prices. The increase in producer surplus will be area a, and this will be the same as the increase in total economic surplus.

An example of an increase in quality would be a technique to improve the length or strength of cotton fiber, the eating quality of a vegetable, or the taste of tobacco. This technology could be embodied in a new variety which has the improved quality or improved management techniques like better plant protection for vegetables and fruits or fertilizer applications for tobacco. This type of technical change can be thought of as a shift in the demand for a commodity from D to D' in Figure 3. In this case, consumer surplus goes up (area a) because of the improved quality, but they lose some surplus because of the increase in price. Producers' surplus increases by the area B + c. Total surplus is a + c.

New technology for farmers can be developed in government agricultural experiment stations and laboratories or by private companies and individuals. It can be developed in Jamaica or outside Jamaica if the production conditions and marketing conditions are similar to Jamaica's. If the needed technology is available outside, then there is no need to do local research other than testing the technology to ensure that it does work in Jamaica. Much

Figure 1

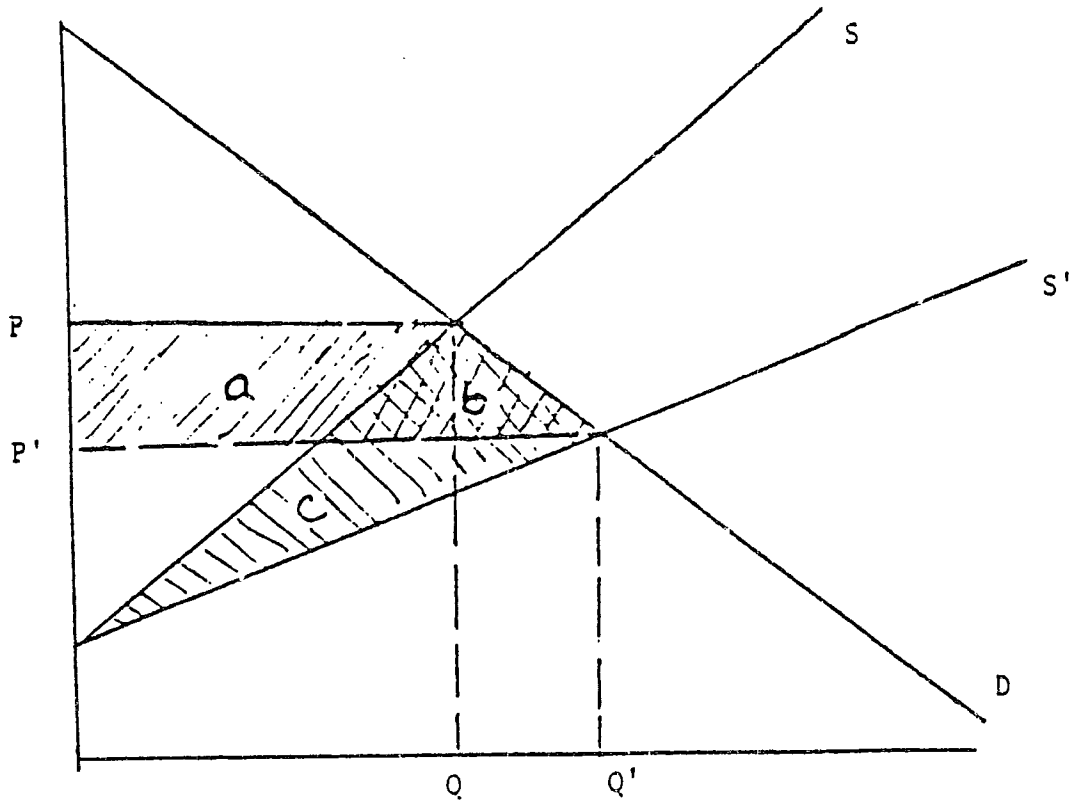

Figure 2

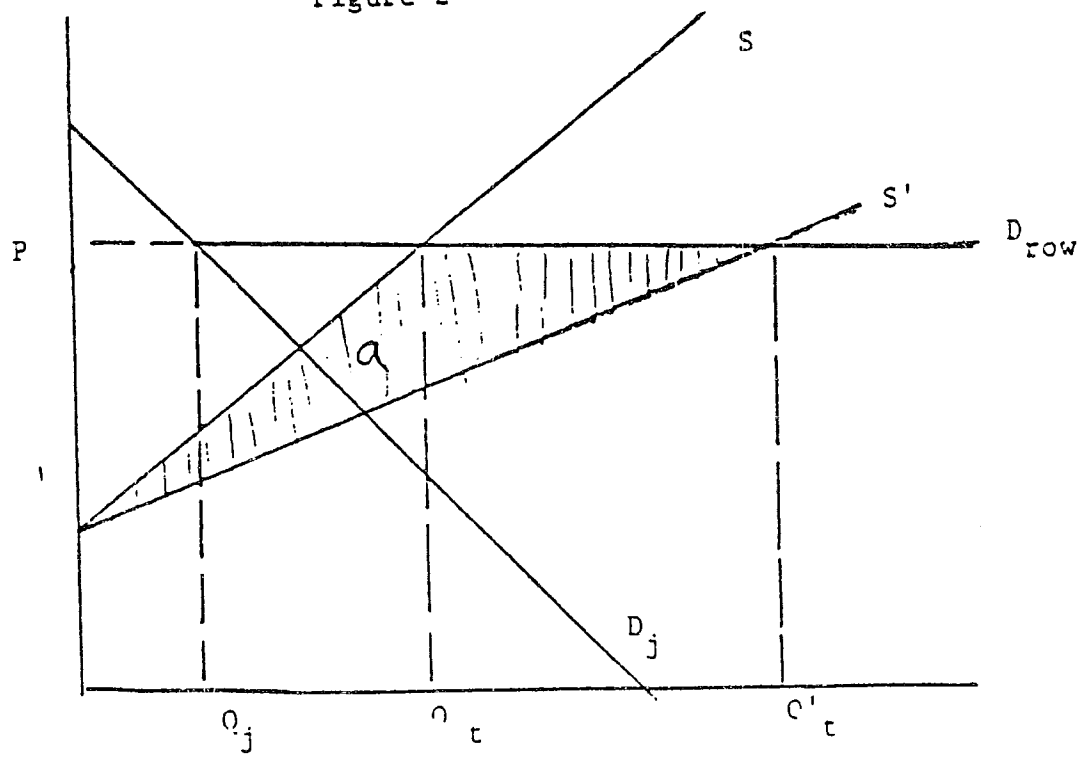

Figure 3.

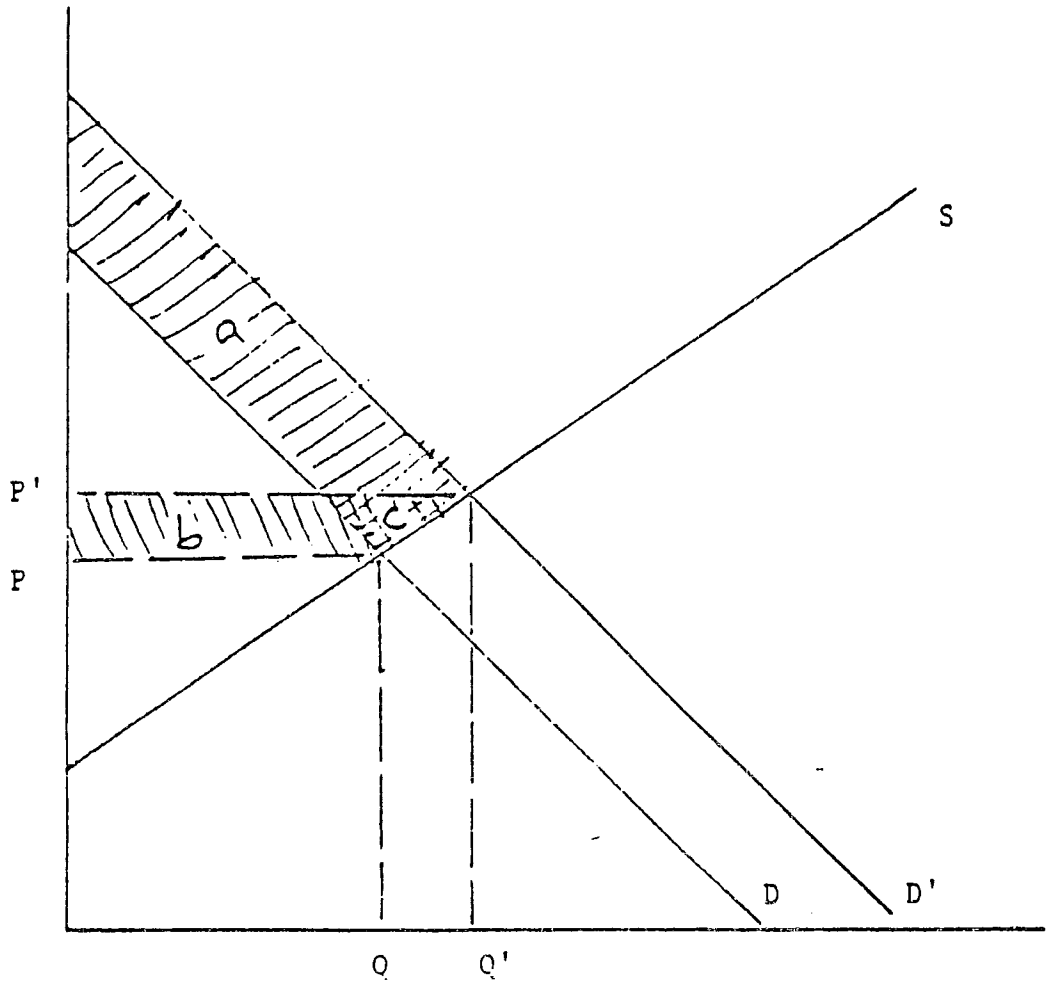

technology has come in from outside. One of the most successful examples in recent years is the importation of commercial poultry technology. This has greatly reduced the cost of producing poultry which has led to an increase in production, a reduction in imports and a reduction in the price of poultry relative to other meat.

Most agricultural technology, however, cannot be as easily transferred as poultry technology. It normally requires some adaptive research to fit local conditions. For example, a maize variety from CIMMYT would at least have to be tested to find out where it yields the most and what cultural practices should be used to get the maximum economic benefits. Pesticides provide a similar example: a new pesticide is known to be active against a certain pest, but the best application method in Jamaican conditions will need to be determined. In some cases, there is no improved technology available in the world for a particular crop. Then local research is necessary.

When governments and/or AID are trying to decide whether it should invest in research or not, it should first determine whether there is technology available elsewhere in the world to fit Jamaican conditions and what the barriers are to the import of that technology. If there are policy barriers or institutional barriers to private importation of technology, then the government should investigate the costs and benefits of removing those barriers. There are several types of barriers to technology transfer. In some countries, certain inputs cannot be imported, e.g., some varieties of hybrid seeds, formulated pesticides or certain types of machinery. In other countries, one company may have a monopoly on the importation and distribution of a particular input. This allows

the input to come in, but it may only be available at a monopoly price. If the barriers to the import of technology are agroclimatic conditions, then a government has to decide how much research to do and what type of research.

Rates of Return to Agricultural Research

There have been a large number of studies of the social benefits and costs of government investments in agricultural research. These studies have shown that in both the developing world and the developed world, the benefits to investments in agricultural research have been very high relative to the cost of these investments. The result is that the annual internal rates of return to research are very high. Table 1 presents a summary of previous studies of rates of return to research. The rates of return in developing countries tend to cluster around 30 to 70 percent annually. There are exceptions of course - wheat research in Bolivia had a negative rate of return and cotton research in Colombia broke even, but cotton research in Brazil returned 77 to 110 percent and soybean research in Colombia 79 to 96 percent. In general, returns have been high.

Some of the highest rates of return to national investment in research are in countries and crops where the International Agricultural Research Centers (IARCs) have been active. This is due to the fact that adaptive research is less expensive and time consuming than more basic research. Recent studies of research in Pakistan (Nagy, 1984) and Indonesia (Salmon, 1984) calculated the rates of return of 60 and 100+ percent, respectively. These high rates were due in large part to the wheat research that had been done in CIMMYT and the rice research which was done in IRRI.

Table 1.

Summary Studies of Agricultural Research Productivity

Study	Country	Commodity	Time Period	Annual Internal Rate of Return (%)
Index Number:				
Griliches, 1958	USA	Hybrid corn	1940-1955	35-40
Griliches, 1958	USA	Hybrid sorghum	1940-1957	20
Peterson, 1967	USA	Poultry	1915-1960	21-25
Evenson, 1969	South Africa	Surgarcane	1945-1962	40
Barletta, 1970	Mexico	Wheat	1943-1963	90
Barletta, 1970	Mexico	Maize	1943-1963	35
Ayer, 1970	Brazil	Cotton	1924-1967	77+
Schmitz and Seckler, 1970	USA	Tomato harvester, with no compensation to displaced workers	1958-1969	37-46
		Tomato harvester, with compensation of displaced workers for 50% of earnings loss		16-28
Ayer and Schuh, 1972	Brazil	Cotton	1924-1967	77-110
Hines, 1972	Peru	Maize	1954-1967	35-40[a] 50-55[b]
Hayami and Akino, 1977	Japan	Rice	1915-1950	25-27
Hayami and Akino, 1977	Japan	Rice	1930-1961	73-75
Hertford, Ardila, Rocha, and Trujillo, 1977	Colombia	Rice	1957-1972	60-82
		Soybeans	1960-1971	79-96
		Wheat	1953-1973	11-12
		Cotton	1953-1972	none
Pee, 1977	Malaysia	Rubber	1932-1973	24
Peterson and Fitzharris, 1977	USA	Aggregate	1937-1942	50
			1947-1952	51
			1957-1962	49
			1957-1972	34
Wennergren and Whitaker, 1977	Bolivia	Sheep	1966-1975	44
		Wheat	1966-1975	-48
Pray, 1978	Punjab (British India)	Agricultural research and extension	1906-1956	34-44
	Punjab (Pakistan)	Agricultural research and extension	1948-1963	23-37
Scobie and Posada, 1978	Bolivia	Rice	1957-1964	79-96
Pray, 1980	Bangladesh	Wheat and rice	1961-1977	30-35
Regression Analysis:				
Tang, 1963	Japan	Aggregate	1880-1938	35
Griliches, 1964	USA	Aggregate	1949-1959	35-40
Latimer, 1964	USA	Aggregate	1949-1959	not significant

Table 1. Continued.

Study	Country	Commodity	Time Period	Annual Internal Rate of Return (%)
Peterson, 1967	USA	Poultry	1915-1960	21
Evenson, 1968	USA	Aggregate	1949-1959	47
Evenson, 1969	South Africa	Sugarcane	1945-1958	40
Barletta, 1970	Mexico	Crops	1943-1963	45-93
Duncan, 1972	Australia	Pasture Improvement	1948-1969	58-68
Evenson and Jha, 1973	India	Aggregate	1953-1971	40
Cline, 1975 (revised by Knutson and Tweeten, 1979)	USA	Aggregate	1939-1948	41-50[c]
		Research and extension	1949-1958	39-47[c]
			1959-1968	32-39[c]
			1969-1972	28-35[c]
Bredahl and Peterson, 1976	USA	Cash grains	1969	36[d]
		Poultry	1969	37[d]
		Dairy	1969	43[d]
		Livestock	1969	47[d]
Kahlon, Bal, Saxena, and Jha, 1977	India	Aggregate	1960-1961	63
Evenson and Flores, 1978	Asia – national	Rice	1950-1965	32-39
			1966-1975	73-78
	Asia – International	Rice	1966-1975	74-102
Flores, Evenson, and Hayami, 1978	Tropics	Rice	1966-1975	46-71
	Philippines	Rice	1966-1975	75
Nagy and Furtan, 1978	Canada	Rapeseed	1960-1975	95-110
Davis, 1979	USA	Aggregate	1949-1959	66-100
			1964-1974	37
Evenson, 1979	USA	Aggregate	1868-1926	65
	USA	Technology oriented	1927-1950	95
	USA	Science oriented	1927-1950	110
	USA	Science oriented	1948-1971	45
	Southern USA	Technology oriented	1948-1971	130
	Northern USA	Technology oriented	1948-1971	93
	Western USA	Technology oriented	1948-1971	95
	USA	Farm management research and agricultural extension	1948-1971	110

Source: Ruttan, 1982.

It should be emphasized, however, than in the absence of local research large benefits would not have been possible in either of these countries. In Pakistan, local research was required to identify varieties that would suit local tastes and local agroclimatic conditions. In Indonesia, local research was needed to identify th: varieties and work out the management techniques to control insect and disease problems.

There are a number of examples much closer to Jamaica where collaborative research between national research systems and IARCs have led to substantial benefits. Costa Rica and Guatamala were included in the recent impact study of the IARCs. In Costa Rica, almost 100 percent of the rice, 35 to 40 percent of the beans, and 10 to 15 percent of the corn area is now under improved varieties which were developed through collaborative research of the IARCs and the national research system. In addition, about 80 percent of the cassava area is using improved management technology that was developed by CIAT and the national system (Stewart, 1985a). These innovations helped increase rice yields from .7 tons/ha. in 1965-66 to 3.2 tons/ha. in 1984-85 and bean production from 5,000 tons in 1973-74 to 20,000 tons in 1983-84. In Guatamala, 40 to 50 percent of lowland maize and 60 percent of highland maize is planted to CIMMYT-based varieties. Adoption of ICTA/CIMMYT wheat varieties is about 100 percent and about 25 percent of bean farmers are using improved seed. Two ICTA/CIAT rice varieties have been released, but there is no data on how widely they have spread (Stewart, 1985). The results of these technologies and other changes on production, yield and imports are shown in Table 2. Stewart was not able to identify exactly how much of this was due to research and how much was due to other inputs.

Table 2. Comparison of Production Yield and Importation of Basic Grains in Guatemala, 1973-83.

Grain	1973			1983		
	Yield kg./ha.	Production Thousands of Cwt.	Import Thousands of Cwt.	Yield kg./ha.	Production Thousands of Cwt.	Import Thousands of Cwt.
Maize	1,180	14,540.2	1,588.5	1,636	22,735.4	53.7
Bean	636	1,288.8	8.6	986	2,266.3	--
Rice	1,600	427.0	4.6	2,850	933.0	3.2
Sorghum	1,360	1,341.2	3.4	2,080	2,183.4	3.5

Source: Stewart, 1985b.

There are no studies of the rates of returns to past research in Jamaica. There is evidence that some past research efforts in Jamaica have had substantial payoffs. For example, research on coconuts by the Coconut Board led to the identification and breeding of hybrids resistant to lethal yellowing which is killing the local variety. The imported Malaysian dwarf and the hybrid of the Malaysian dwarf and Panama tall known as Maypan have almost entirely replaced the local varieties.

Rates of return to other investments in developing countries rarly reach levels comparable to those from research. Private returns to investment in the industrial sector of over 10 percent are thought to be quite high. Rates of return to other public sector investments in agriculture are rarely as high as research. Ruttan recently reviewed the literature on development aid in agriculture (Ruttan, 1986). He finds that the return to extension expenditure are considerably lower than research; the returns to public investments in agricultural credit have frequently been negative; the returns to irrigation investments are always far below what is predicted in advance, and in half of The World Bank projects reviewed recently by another author, rates of return were under 15 percent.

Specific Benefits From the Proposed Agricultural Research Project

The goal of this project is to strengthen the technology generation system as a whole by channelling money into areas of research which will have a high payoff. The research priorities will be determined by the Research Coordinating Committee (RCC) which should include researchers and users of research. These new resources will allow existing research institutions in the public, parastatal and private sectors to expand

their research programs. As previous studies have shown increased investments in agricultural research generally lead to reduced costs of higher quality which, in turn, increases the well being of consumers and producers of the agricultural commodity. Since the research priorities which the RCC will select are not known, three examples of commodities were chosen on the basis of their potential for technical advances. The commodities include a subsistance/export crop, a commodity that is imported and a commodity in which there is little import or export. Hopefully, these examples may be of use to the staff of the RCC when they are preparing background data for the priority setting exercise.

The innovations chosen are all of the cost reducing type. The first is the new yam production technology developed at IITA which (1) uses tissue culture and minisetts to greatly increase the availability and quality of planting material, (2) greatly increases the plant population, and (3) uses plastic mulch to hold down weeds. The second is the selection and testing of new red bean varieties from CIAT to increase bean yields. The third is the selection and screening of vegetable varieties from the United States, AVRDC or elsewhere for the varieties that fit best in Jamaica's farming systems.

To estimate the impact of a new technology, the following information is required:

1. Current production, prices and yield per acre or cost of production.
2. Change in yield or cost of production due to the research program.
3. The pattern of adoption by farmers.
4. Price elasticities of supply and demand.

5. Projections of shifts in the demand curve due to changes in Jamaican income and population and due to changes in world demand for Jamaican goods.

Items 2 and 3 combine to make up the shift in the supply curve which is represented in the equations below as k. Current price and production are used to evaluate the change in consumer and producers' surplus which results from the shift in the supply or demand curve. The elasticities give the shape of the supply and demand curve. These elasticities do not affect total benefits much but do affect the distribution of the benefits between the producers and consumers. The major cost of the project will be the cost of the research and any additional extension expenditures that are required.

The first item listed in the previous paragraph is the only one that is relatively easy to find. The most accurate way of estimating the impacts on yield, cost of production or quality due to successful research is to survey a number of scientists who are familiar with current Jamaican crop technology, technology that is available elsewhere and the capacity of the Jamaican research system (public and private) to generate new technology. It was not possible to do such a survey, and it is not clear that there are sufficient scientists around who have information on all of these points. Therefore, in the following examples, we used estimates of yield changes from the author of the technical report, from Dr. Asnani of IITA, and the agriculturalists in the AID mission. These estimates were then scaled back to ensure that the estimates were not too optimistic.

The pattern of adoption of new technology has not been studied recently in Jamaica nor was there time to do a study now. The government extension system is weak. However, the marketing boards have extension

systems for their crops; cooperatives and PVOs play an extension role in some crops; Agro21, through their "mother farm" program, encourages large investors to play an extension role, and the input industry provides technical information along with their products. In addition, Jamaica has a high level of literacy and good communications which should help the flow of technical information. The conclusion is that information about major innovations should travel quite rapidly. For the purposes of this study, very conservative adoption rates have been assumed. They are, in general, much lower than those found in Central America and lower than those assumed in the recent projectt paper for the Honduras Agricultural Research Foundation.

The supply and demand elasticities used were from Pollard and Graham (1986) and current unpublished studies that are going on at Iowa State University. For the case where there is external trade, an infinitely elastic curve was assumed. This study does not consider the fifth item - changes in the demand curve. The affect of this omission is probably to underestimate the benefits to research.

The cross-hatched area in Figure 4 depicts graphically the net economic gains resulting from shifts in the product supply curve as yield increases or cost reductions occur due to adoption of new technologies. The following equations were used to evaluate those gains:

1. Total Net Economic Gains = kP_oQ_o (1 + 0.5Zn)
2. Net Economic Gains to Consumers = ZP_oQ_o (1 + 0.5Zn)
3. Net Economic Gains to Producers = (1) - (2)

Where: $k = (C_o - C_1)/P_o$

$Z = k\ e/(e + n)$

P_o = Original commodity price

Q_o = Original commodity quantity

e = Price elasticity of supply

n = Price elasticity of demand (absolute value)

$C_o - C_1$ = Change in cost due to research

When benefits are measured as a quantity change rather than a cost change, the variable K is calculated as $(Q_2 - Q_o)/Q_o$ which equals the percentage change in yield due to research. K is then converted to k for use in the equations by making use of the relationship $k = K/e$.

The research in yam technology in Jamaica is in its infancy. Currently, yam production is constrained by the lack of improved varieties and the inability to rapidly increase acreage or planting density because the top quarter of the harvested yam is used as the planting material for next season's crop. In 1985, IITA tissue culture and propagation technology was introduced to Jamaica after testing in Nigeria and Barbados. Before it was tested in Jamaica, at least one local farmer started using the minisett propagation technique based on pictures and presentation by Dr. Asnani. Now that the IITA team has started work, several more cultivators have started experimenting with this technique. This is clear evidence that a technique for rapid propagation was needed. The technique for developing improved local planting material still requires some testing to test its technical viability with different types of yams. The commercial viability for private investors or the ability of the government to run such a program still has not been proven. Thus, in contrast to estimates by IITA that the

Figure 4. Benefits to Agricultural Research.

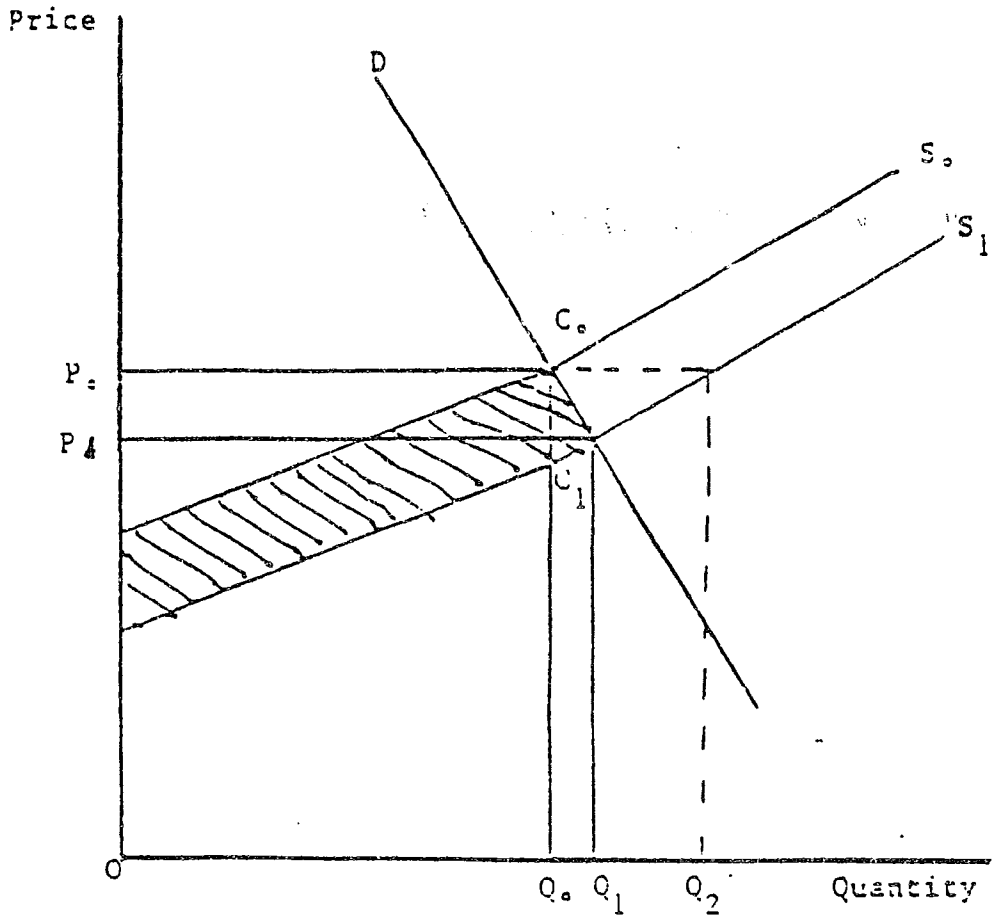

yield per acre could triple, we have based our estimate benefits on yield increases of 50 percent due to increased plant population and farmer's ability to screen his local material for the best yielding and most disease free tubers for planting material. This process will require a continuing on farm research program to monitor disease and insect problems that may be associated with increased plant density and to develop other management techniques to reduce the cost of yam production. We assume that this project will fund on-farm work in yams.

The assumption is that technology from this project will start to spread in the first year after the on-farm research is conducted and that, fifteen years after the project starts, it will cover 20 percent of the current yam acreage. This is very conservative if the yield increases are 50 percent. Mechanisms of diffusion from the site of the experiment are present - farmers talk to other farmers and the exporters of the crop, who are at present having difficulty finding enough yams to export, would spread the technology to other parts of Jamaica. In other countries like Costa Ric-, rootcrop management technologies have spread more rapidly than this - improved cassava management techniques spread to 80 percent of the acreage in ten to fifteen years (Steward, 1985a) - which also suggests this adoption rate is very conservative.

The initial values of yam production was 164,300 tons at a price of J$1.00/lb. The supply elasticity was assumed to 1 and the demand elasticity -2 assuming that the world market for yams is relatively limited or infinitely elastic assuming Jamaica is a small country selling in a very large world market for yams.

The benefits from this project (column NEG in the top part of Table 3) under these assumptions would be sufficient to pay for this AID project and

Table 3.

YAMS: BENEFITS (J$1,000s)

Qo=164,300 e=1 n=-2 Yield change 50%

Po=J$2240/ton

Year	Adoption	k	NEG	CS(-2)	PS(-2)	COST*	Net Bens
1	0	0	0	0	0	5350	-5350
2	0.0142857	0.0071429	2635.059	878.35302	1756.706	5350	-2714.941
3	0.0285714	0.0142857	5282.6362	1760.8787	3521.7575	5350	-67.36381
4	0.0428571	0.0214286	7942.7314	2647.5771	5295.1543	5350	2592.7314
5	0.0571429	0.0285714	10615.345	3538.4483	7076.8965	5350	5265.3448
6	0.0714286	0.0357143	13300.476	4433.4921	8866.9841	5350	7950.4762
7	0.0857143	0.0428571	15998.126	5332.7086	10665.417	5350	10648.126
8	0.1	0.05	18708.293	6236.0978	12472.196		18708.293
9	0.1142857	0.0571429	21430.979	7143.6597	14287.319		21430.979
10	0.1285714	0.0642857	24166.183	8055.3943	16110.789		24166.183
11	0.1428571	0.0714286	26913.905	8971.3016	17942.603		26913.905
12	0.1571429	0.0785714	29674.145	9891.3816	19782.763		29674.145
13	0.1714286	0.0857143	32446.903	10815.634	21631.269		32446.903
14	0.1857143	0.0928571	35232.179	11744.06	23488.119		35232.179
15	0.2	0.1	38029.973	12676.658	25353.316		38029.973

NPV(i=10%)81636.513
NPV(i=50%)354.08222

Assuming n=infinite NEG=CS

Year	Adoption	k	NEG	COST*	Net Ben	NPV
1	0	0	0	5350	-5350	79505.504 (i=10%)
2	0.0142857	0.0071429	2628.8	5350	-2721.2	237.33445 (i=50%)
3	0.0285714	0.0142857	5257.6	5350	-92.4	
4	0.0428571	0.0214286	7886.4	5350	2536.4	
5	0.0571429	0.0285714	10515.2	5350	5165.2	
6	0.0714286	0.0357143	13144	5350	7794	
7	0.0857143	0.0428571	15772.8	5350	10422.8	
8	0.1	0.05	18401.6		18401.6	
9	0.1142857	0.0571429	21030.4		21030.4	
10	0.1285714	0.0642857	23659.2		23659.2	
11	0.1428571	0.0714286	26288		26288	
12	0.1571429	0.0785714	28916.8		28916.8	
13	0.1714286	0.0857143	31545.6		31545.6	
14	0.1857143	0.0928571	34174.4		34174.4	
15	0.2	0.1	36803.2		36803.2	

*Assumes all costs of project are for yams.

achieve a rate of return of over 50 percent. The benefits to consumers and producers is designated CS and PS, respectively, in the table. It could also increase exports by over J$30 million by the thirteenth year of the project (Column NEG is second section of the yam table). However, there would not be much increase in consumer benefits for Jamaicans because most of the increased production would be exported, and there would be a very small decrease in prices.

Red peas are the most important locally produced bean. Substantial quantities of beans are imported but very few red peas. Like yams there appears to be a backlog of technology from the IARCs that Jamaica has not yet taken advantage of. CIAT has done a considerable amount of research on red peas, but Jamaica has not made much use of CIAT's germplasm. Thus, it appears that a program of testing CIAT varieties in farmers' fields has considerable potential. Jamaica's official yields were 0.42 tons per acre in 1984 while CIAT and national programs in Central America have developed varieties that yield over a ton per acre (CIAT, 1983). For the purposes of this example, it is assumed that yields can be increased by 10 percent per acre by adopting new technology, that adoption of new technology will start three years after the research program starts and that adoption will reach 10 percent of the red pea acreage by ten years after the new varieties are released. In addition, we have assumed that very few red peas are imported or exported. The initial values used were 4,731 tons production, a price of J$10/lb., supply elasticity of .5 and demand elasticity of -.5.

The benefits from this technology (NEG in Table 4) are far more modest than of yams because the value of beans is far less than yams, and the increase in yields is less. However, if we assume the cost of

ble 4. Red Beans Research: Costs and Benefits.

=4,731 P=J$10/lb e=.5 n=-.5 yield change=10%

Year	Adoption	k	NEG	CS	PS	COST	NET BEN	NPV
1	0	0	0	0	0	267.5	-267.5	5009.4594 (i=10%)
2	0	0	0	0	0	267.5	-267.5	590.2726 (i=30%)
3	0	0	0	0	0	267.5	-267.5	129.19631 (i=40%)
4	0.01	0.002	212.00179	70.67315	141.32864	267.5	-55.49821	
5	0.02	0.004	424.10955	141.3934	282.71615		424.10955	
6	0.03	0.006	636.32328	212.16075	424.16254		636.32328	
7	0.04	0.008	848.643	282.9752	565.6678		848.643	
8	0.05	0.01	1061.0687	353.83675	707.23193		1061.0687	
9	0.06	0.012	1273.6003	424.7454	848.85494		1273.6003	
10	0.07	0.014	1486.238	495.70114	990.53683		1486.238	
11	0.08	0.016	1698.9816	566.70399	1132.2776		1698.9816	
12	0.09	0.018	1911.8312	637.75394	1274.0772		1911.8312	
13	0.1	0.02	2124.7867	708.85099	1415.9357		2124.7867	
14	0.11	0.022	2337.8483	779.99513	1557.8531		2337.8483	
15	0.12	0.024	2551.0158	851.18638	1699.8294		2551.0158	

Red Beans

=4,731 P=J$10/lb e=.5 n=-1 yield change=10%

Year	Adoption	k	NEG	CS	PS	COST	NET BEN	NPV
1	0	0	0	0	0	267.5	-267.5	5013.0947 (i=10%)
2	0	0	0	0	0	267.5	-267.5	590.83942 (i=30%)
3	0	0	0	0	0	267.5	-267.5	129.46356 (i=40%)
4	0.01	0.002	212.01945	70.67315	141.3463	267.5	-55.48055	
5	0.02	0.004	424.1802	141.3934	282.7868		424.1802	
6	0.03	0.006	636.48225	212.16075	424.3215		636.48225	
7	0.04	0.008	848.92559	282.9752	565.9504		848.92559	
8	0.05	0.01	1061.5102	353.83675	707.67349		1061.5102	
9	0.06	0.012	1274.2362	424.7454	849.49079		1274.2362	
10	0.07	0.014	1487.1034	495.70114	991.40229		1487.1034	
11	0.08	0.016	1700.112	566.70399	1133.408		1700.112	
12	0.09	0.018	1913.2618	637.75394	1275.5079		1913.2618	
13	0.1	0.02	2126.553	708.85099	1417.702		2126.553	
14	0.11	0.022	2339.9854	779.99513	1559.9903		2339.9854	
15	0.12	0.024	2553.5591	851.18638	1702.3728		2553.5591	

red pea research is about J$267,500 or US$50,000 per hear, the rate of return to research will still be very high. With these assumptions, it comes to over 50 percent. In this case, about one-third of the benefits go to consumers and two-thirds to producers.

The final example is winter vegetables (Table 5). Private companies sell seed, and there is a small amount of applied research being conducted by PVOs and cooperatives. IICA has found in their farming systems' projects that farmers have not tried many of the vegetable varieties that are on the market. IICA's small program of testing a number of different cabbage and tomato varieties against the most popular local varieties yielded immediate results. All the tomatoes yielded about the same, but there was a lot of variation in the cabbage varieties. Farmers started using a cabbage variety that the IICA team had purchased in Kingston. Its yields were over 20 tons/acre on farmers' fields compared to 12.6 tons of the variety currently used (Ministry of Agriculture, 1986). Discussions with Agro21 officials and others also suggested that there is a need to screen imported vegetable seeds on farmers' fields and to teach them how they can test more effectively themselves. On the basis of the experience with cabbage, it would seem that 10 percent yield increases would be possible from an applied testing program. Tomatoes, bell peppers and cucumbers have been used because of availability of data and their prospects for exports. Exports of all of these crops have been increasing in the last few years. There are some disease problems in tomatoes and peppers which may require searching and screening for resistant varieties.

The initial values used were 32,561 tons of tomatoes, 3,083 tons of cucumbers and 7,040 tons of bell peppers. Prices were the 1984 F.O.B.

ble 5. Vegetables: Tomatoes, Cucumbers, Squash, Bell Peppers.

itial Values	Q	Yield/acre	P/lb(FOB)	e=1	n=-2	Yield increase=10%	
matoes	32561	6.7	1.12	Weighted yield =		6.2905702	0
icumbers	3083	4	0.87	Weighted price =		1.1679161	
ell peppers	7040	5.4	1.52	42684			

ource: Pollard except cucumber and pepper yields from Minag Farm Management Division

Years	Adoption	k=.1*adop	NEG	CS	PS	Cost	Ben-Cost	NPV	NEG Trade
1	0	0	0	0	0	250	-250	7280.9989	0
2	0.0142857	0.0014286	207.71384	69.237947	138.47589	250	-42.28616	360.0796	207.61498
3	0.0285714	0.0028571	415.62541	138.5418	277.08361	250	165.62541		415.22995
4	0.0428571	0.0042857	623.73471	207.91157	415.82314	250	373.73471		622.84493
5	0.0571429	0.0057143	832.04173	277.34724	554.69449	250	582.04173		830.4599
6	0.0714286	0.0071429	1040.5465	346.84883	693.69766	250	790.54649		1038.0749
7	0.0857143	0.0085714	1249.249	416.41632	832.83265		1249.249		1245.6899
8	0.1	0.01	1458.1492	486.04973	972.09945		1458.1492		1453.3048
9	0.1142857	0.0114286	1667.2471	555.74904	1111.4981		1667.2471		1660.9198
10	0.1285714	0.0128571	1876.5428	625.51426	1251.0285		1876.5428		1868.5348
11	0.1428571	0.0142857	2086.0362	695.3454	1390.6908		2086.0362		2076.1498
12	0.1571429	0.0157143	2295.7273	765.24244	1530.4849		2295.7273		2283.7647
13	0.1714286	0.0171429	2505.6162	835.20539	1670.4108		2505.6162		2491.3797
14	0.1857143	0.0185714	2715.7028	905.23425	1810.4685		2715.7028		2698.9947
15	0.2	0.02	2925.9871	975.32902	1950.658		2925.9871		2906.6097

prices of J$1.12/lb. for tomatoes, J$.87/lb. cucumbers and J$1.52 for bell peppers. A supply elasticity of 1.0 was used and a demand elasticity of -2 or infinity. It is assumed that adoption will start the next year after trials start and that the cost would be about J$250,000.

As with the other examples, the rates of return to vegetable research are very high. The rate of return on the vegetable research would be over 50 percent. If we assume that all of the commodity is consumed internally and that demand elasticity is quite high (-2), then about one-third of the benefits go to consumers and two-thirds to producers. If we assume all of the increased output is exported, an additional J$2.5 million foreign exchange would be earned through exports (column designated NEG Trade in the table).

The total benefits from these three subprojects are displayed in Table 6. The benefits have been displayed based on when the contracts for these three groups of crops would be started. The total cost of the project is US$1 million a year over seven years. This table indicates that the research in these commodities alone will more than pay for the proposed research program. The rate of return to this project, even if it only affects these crops, will be over 30 percent annually. The assumptions made about benefits in these crops have been conservative also so that this would seem to be an underestimate of returns. We have done some sensitivity analysis. The results are most sensitive to the assumptions about the size of the yield change and when the research benefits start to be achieved. If the yield estimates are cut in half for these three crops, the internal rate of return would still be also 20 percent as the last column in this table shows.

An additional benefit from research is increased export earnings.

Table 6. Costs and Benefits From Agricultural Research Project.

	(J$millions)					
	YAMS	RED PEAS	VEGETABLES	COSTS	NET BENEFITS	NET BENS LOW
1				5.35	-5.35	-5.35
2				5.35	-5.35	-5.35
3				5.35	-5.35	-5.35
4	2.6			5.35	-2.75	-4.05
5	5.3	0.2	0.2	5.35	0.35	-2.5
6	7.9	0.4	0.4	5.35	3.35	-1
7	10.5	0.6	0.6	5.35	6.35	0.5
8	13.1	0.8	0.8		14.7	7.35
9	15.8	1.1	1		17.9	8.95
10	18.4	1.3	1.2		20.9	10.45
11	21	1.5	1.5		24	12
12	26.3	1.7	1.7		29.7	14.85
13	28.9	1.9	1.9		32.7	16.35
14	31.5	2.1	2.1		35.7	17.85
15	34.2	2.3	2.3		38.8	19.4
			NPV with i=10%		58.727331	16.340645
			NPV with i=20%		15.618535	-1.833016
			NPV with i=30%		1.4856198	
			NPV with i=40%		-3.420015	

ALLOCATION OF RESOURCES

The most efficient allocation of research resources between commodities is to allocate money so that the net benefit of investing another dollar in research in any commodity is equal. If the technical change from one dollar of research in each commodity is assumed to be equal, and the goal is to maximize the social benefits of research, then one should allocate research resources roughly according to their share of the value of output. This rule of thumb is widely used as an initial way of deciding whether research resources are allocated efficiently or not. If the country has other goals like improving income distribution or maximizing foreign exchange, then the allocation of resources has to be modified.

The current allocation of research resources is not available from the government of Jamaica or AID. The most recent study which surveyed agricultural research and extension resources was the 1978 study by the University of Kentucky. Their data is found in Table 7. The research and extension data are summarized into three major categories in Table 8. They indicate that the traditional exports have far greater shares of research resources than their share of agricultural output. Domestic crops receive far less than their share of output. Conversations with knowledgeable Jamaicans and United States experts (Maner and Rachie, 1985) indicate that the situation has probably gotten worse since 1978. Research budgets of traditional exports have kept up with inflation or declined slightly while there has been a dramatic decline in domestic crop research due to the budget problems of the Jamaican government. The

Table 7. Major Organization Units Engaged in Agricultural Research and Research Personnel by Level of Training, 1978.

Organization	Ph.D.	M.S.	B.S.	L.B.S.	Total	Total Research Budget
Banana Board	3	1	7	16	27	431,684
CARDI		2	5	7	14	120,000
Coconut Board		2	2	13	17	364,607
Sugar Research Institute	1	4	5	21	31	219,109
Scientific Research Council	2	6	7	12	27	810,000
Tobacco Industry Control Authority			1	1	2	19,000
Ministry of Agriculture:	(2)	(15.5)	(21.5)	(24.5)	(63.5)	
Crops		1	9		10	750,000
Soils		0.5	0.5	0.5	1.5	53,570
Forestry		1	2	6	9	15,000
Livestock	2	2	5	5	14	1,235,275
Plant Protection		11	5	13	29	321,052
Total	8	30.5	48.5	94.5	181.5	4,339,297

Note: Information derived from personal interviews and written questionnaire. This table tends to overestimate personnel engaged in agricultural research to some degree (particularly in plant protection and livestock) because some of the activities carried out by the staff are largely service and developmental rather than truly research. There is an offsetting underestimation due to the fact that some agricultural research is conducted by the University of the West Indies (Mona), but information was not provided for inclusion. There is also some research activity carried out by private organizations such as ALCAN, Pioneer, etc., but their work is largely developmental, and comparable data were not obtained regarding their research activities.

Source: University of Kentucky, 1978.

Table 8. Allocation of Research and Extension Resources.

	Research(1978)		Extension(1978)		Value of Output	
	%$s	%SMYs	%$s	%MYs	%(1980)	%(1984)
Traditional Exports	44	56	40	39	17	15
Domestic Crops	22	24	51	52	53	55
Livestock	34	20	9	9	30	30

Sources: Traditional exports research includes bananas, coconuts, sugar and tobacco, domestic crops includes crops and soils and livestock is livestock from Table 7; extension is from Kentucky and value of output is from the Statistics of Jamaica.

allocation of extension resources in 1978 is also shown in Table 8. Like research export crop, extension has more than its share of output. Domestic crops have about their share of extension, but livestock has less than its share. Since 1978, domestic crop extension budgets and services have declined dramatically.

In Jamaica, if the goal is to maximize foreign exchange, then the rule is very similar to our rule of thumb. Jamaica is basically an open economy which can import or export almost any agricultural product it produces. Research on most "domestic crops" would either reduce imports or increase exports by about the amount of the increase in output due to research. Thus, the value of the commodity - using world market prices - would still be an appropriate measure of the importance of doing research on that commodity.

Major differences in the technical potential of research in Jamaica appears to be quite likely since they have apparently not taken advantage of the technology from the IARCs in a number of crops. Adjustments may also have to made for differences in the availability of scientific manpower with expertise in a particular commodity. This violates the assumption that a dollar spent on research in any commodity will produce equal changes in technology. Traditional export crops like bananas and sugarcane do not appear to have as much potential because they have had access to the best technology in the world through multinationals like United Brands and Tate and Lyle. Therefore, it seems unlikely that there is available technology that has not been imported or adapted. This implies that more resources should be shifted to crops with more potential which, in the Jamaican context, appears to be domestic crops like yams and beans and pastures

which are an input into livestock production. This reinforces the implication for more research effort on domestic crops which comes from examining the value of the different groups of commodities.

To set research priorities, two types of information are needed. First, technical information on (a) the potential impact on crop or livestock productivity or quality, (b) the probability that the proposed research will actually produce the productivity and quality change, and (c) the cost of the research. The second type is economic and social information about the adoption of the new technology, the value of the technology if adopted, and the political and social goals of society. Thus, planning needs input from physical and social scientists. In addition, planning needs input from scientists, farmers and businessmen outside of the research institutions to ensure that the assessment of the physical and social scientists is realistic.

BIBLIOGRAPHY

CIAT Annual Report, 1983.

Kentucky, University of, in cooperation with Ministry of Agriculture, Ministry of Education and USAID, "Baseline Study of Agricultural Research, Education, and Extension in Jamaica", December 15, 1979.

Maner, Jerome H. and Rachie, Kenneth, "A Brief Assessment of Agricultural Research in Jamaica and REcommendations of Approaches and Strategies for Implementation", Winrock International, 1983.

Ministry of Agriculture, "Evaluation Report: Cropping Systems Research (Jamaica) Project, November, 1984 - October, 1985", February, 1986.

Nagy, Joseph G., "The Pakistan Agricultural Development Model: An Economic Evaluation of Agricultural Research and Extension Expenditures", PhD Thesis, Department of Agricultural and Applied Economics, U. of Minnesota, 1984.

Pollard, Stephen K., Graham, Douglas H., and Gonzalez-Vega, Claudio, "Developing Interregional Trade with the Caribbean: The Impact of Macroeconomic Policies", A Report Submitted to ERS, USDA, March, 1986.

Ruttan, Vernon W., Agricultural Research Policy, Minneapolis, U. of Minnesota Pres, 1982.

Ruttan, Vernon W., "Assistance to Expand Agricultural Production", World Development, Vol. 14, No. 1, 1986.

Salmon, David, "An Evaluation of Investment in Agricultural Research in Indonesia, 1965-77", PhD Thesis, Department of Agricultural and Applied Economics, U. of Minnesota, 1984.

Stewart, Rigoberto, "Costa Rica and the CGIAR Centers: A Study of Their Collaboration in Agricultural Research", Washington, D.C., The World Bank, 1985a.

Stewart, Rigoberto, "Guatamala and the CGIAR Centers: A Study of Their Collaboration in Agricultural Research", Washington, D.C., The World Bank, 1985b.

Annex E
Institutional Analysis

THE IMPLEMENTING AGENCY: JADF

The most feasible organization to implement the project is the JADF. Created and supported through P.L.480 sales proceeds and an AID Grant of $1.5 million, this private non-profit foundation exists to provide loans and equity financing to agribusiness and agroindustry firms. Agricultural research is already included in the mandate of the JADF, which is in fact already pursuing a few activities, albeit small, in this field. The project would simply provide JADF with the additional funding necessary to bring on the required staff and to finance the other project activities. Members of JADF's Board could conceivably sit on the RAC as well, but given the more defined focus of the RAC, representatives from a different constituency would be preferable.

During Project development, the Mission examined the feasibility of several alternate approaches regarding the implementing agency. In addition to channelling the funding through JADF, these included the following:

-- Channel the funding to a PVO established expressly as an autonomous research organization. Although this would ensure that adequate attention is focused on the issue at hand, the actual establishment of the PVO and the necessary initial period of time needed to move through the learning curve could impede the timely implementation of the project.

-- Channel the funding through Agro 21. This approach has several disadvantages, most notably the goals and focus of Agro 21 and its planned limited life span. It was set up to be a fast response mechanism to mobilize investors in the agricultural sector, and their mandate would not seem to be compatible with the longer term needs of the research subsector, particularly with respect to institutionalization and the permanent establishment of a research coordinating body.

-- Channel the funds through one of the existing commodity boards. Although this is in line with the proposal put forth by the PIOJ for NARDI, there are several disadvantages. These include the probability of research not receiving high priority vis a vis the board's other interests and the probability of discrimination by the board in pursuit of its own research interests to the detriment of necessary research in other areas.

-- Channel the funds through an OPG to an existing US organization that specializes in the institutionalization of research development, if such an organization with a proven track record were available. However, this approach would increase the administrative costs significantly and reduce the funding available for direct research activities.

Background: The JADF was created with A.I.D. financial support in January 1984. Its basic purpose is to provide financing to agricultural businesses, as part of a larger effort to strengthen the private sector and help develop Jamaican agriculture. Its bylaws list seven specific objectives, which are generally related to its basic purpose:

-- To initiate, develop and promote agriculture and agribusiness in the broadest sense, and to advance projects which complement Jamaica's agricultural strength.

-- To promote, develop and advance the involvement of the private sector in agriculture, agroindustry and agribusiness.

-- To develop agroindustry and agribusiness, introduce new products and develop markets to promote the Jamaican economy and benefit Jamaica's foreign exchange by increasing production to satisfy domestic food needs and to increase food exports by Jamaica.

-- To promote economic and community development in agriculture; to develop new investments; to develop new markets for new agricultural production.

-- To promote and develop systems for collection, distribution and sales of agricultural products.

-- To introduce new technologies into Jamaica's agroindustry and agribusiness.

-- To promote self-sufficiency in dairy products.

The Foundation is financed through P.L. 480 commodity programs in dairy products: butter, cheese, and milk powder. The JADF receives these products, sells them to local firms for processing, and uses the revenue to finance itself. However, it plans to become self-financing from its loan portfolio in the medium term.

In 1985, it received approximately US$4 million through P.L. 480. JADF projects to increase its staff from 11 to 16 this year. It is headed by a Director, Keith Roach, who has a background in both finance and agriculture. Dr. Roache has a Ph.D. in animal science from McGill University and has academic experience in his field.

While the JADF has given a few small grants related to research, and its clients might be potential beneficiaries of future research, the central thrust of the organization at present is clearly not research. In terms of its financial backing and legal status as a private sector, non-profit institution in agriculture, however, the JADF is quite similar to the type of organization needed to establish a firm footing for national agricultural research.

THE GOVERNING BODY: RAC

Overview: The main policy advisory body of the research program will be the RAC, composed of members from farmers' organizations, educational institutions, international and national research groups, and other agricultural interests. The selection of members of the RAC, along with the selection of the PD, are the crucial decisions that will determine whether an apolitical, private sector, results-oriented research program is possible.

The RAC is the single most important element in the process of building a constituency for research, and for ensuring that the research undertaken is appropriate, needed, and will be used. Members of the RAC will be able to provide, through subcommittees when appropriate, expertise in developing research priorities. Members will in effect serve as linkages between agricultural institutions represented on the RAC and the research program, providing feedback crucial for assessing the quality and applicability of the research, and conveying research findings to their institutions.

Establishing the RAC: The following steps may be useful in setting up the RAC:

(1) A temporary group will be set up whose members represent prestigious researchers (international and Jamaican) and Jamaican agricultural interests. This "Selection Committee" will select the members of the RAC. The process of determining the 5-11 members of this Selection Committee is an important one in which AID should work closely with JADF. AID should formally solicit recommendations for Selection Committee members in a systematic way, through letters and discussions of the project. While representatives from particular groups will undoubtedly suggest members of their own organizations, they should be asked to cast a wider net and indicate people outside their own organization who would competently support a new initiative in agricultural research. In this formal solicitation process, groups or individuals who probably would not be represented on the RAC can be asked for recommendations if they are thought to have special knowledge of or interest in Jamaican agricultural research. This

might include American university groups who have worked in Jamaican agriculture (for example, the University of Georgia in conjunction with their Peanut CRSP, and the University of Florida because of their research ties), outside consultants who have worked in Jamaican agriculture, firms such as Pioneer Seed, and a broad range of other people in Agro-21, credit institutions, input suppliers and processors, etc.

It is important that this process be consensual and participatory, and create the realization that the success of the research initiative will rest on the RAC members' abilities to serve well. They will not simply be lobbyists for their organization, looking eagerly at a new AID source of research money.

The Selection Committee should represent diverse constituencies, but all should have some general commitment to the research idea beyond whatever special interests they represent. Because the research program intends to borrow heavily from the IARCs, one or more representatives should probably be among the members of the Selection Committee. Of chief importance might be CIP; not only is it located in this hemisphere, it concentrates on potatoes (and now sweet potatoes as well), crops of some importance to Jamaica. PRECODEPA, a research network in potatoes loosely affiliated with CIP, might be a candidate. CIAT and CIMMYT are other international centers which might be represented. CARDI, given its strong presence in Jamaica, and its able leadership, should be among the members of the Selection Committee, as probably should CATIE. IICA and IITA, both having research programs in Jamaica, should be considered as potential members. If the Caribbean Agricultural Network Project has been implemented by the time of selecting the members, a representative from it might be highly appropriate. Internationally respected scientists and research managers should also be included, for the expertise they bring to developing research programs.

The Selection Committee may include important government officials, but these should clearly be a small minority. Nonetheless, the MOA Director of Research, the head of Bodles Experiment Station, directors of agricultural boards (Coconut, Cocoa, etc.), the Director of Extension, the head of the Scientific Research Council, and scientists affiliated with other government programs should be considered.

In addition, educators with a strong research orientation from the UWI, from the COA, or other schools which Jamaicans attend should be considered.

To a lesser degree than the above, the group may want to consider those allied with agriculture but with less direct interest or expertise in research: input suppliers, processors, and exporters.

(2) As part of this process, informal one-on-one and small group discussions should be initiated to begin the process of thinning out the lists of candidates. It might be useful to informally develop a small working group consisting of an AID person and 2-4 other people who are knowledgeable about and committed to agricultural research and development and who do not represent special interests which might benefit from the research program. This group can draw up the final list of membership for the Selection Committee.

(3) The Selection Committee will act as an interim RAC. They will meet in a general assembly and select the regular members of the RAC using the following guidelines:

-- There shall be 15 to 21 people on the RAC.

-- Seats should be assigned to persons with desired qualifications, not to representatives of particular institutions.

-- However, given the private nature of the research program, the participation of organizations belonging to, or controlled by, the public sector should not exceed one-fourth. An illustrative list of the members is given below.

-- When nominating new members, a representation and balance similar to those already existing should be sought among the general categories of public institution, producers' association, private enterprise, educational institution, and international research group.

DC 1. Small farmer (crops): through Jamaica Agricultural Society

DC 2. Small/medium farmer (livestock): through Jamaica Livestock Association

DC 3. Consumers: through the National Consumer League

DC 4. Extension: Head of MOA Extension or his designee

DC 5. Marketing: person should be knowledgeable of both internal and external markets.

DC/S 6. Credit and finance: representative of the national agricultural bank

DC/S 7. Agro-industry: representative of an important industry, particularly processing

DC/S 8. Non-traditional crops: representative from Agro 21

R/S 9. Agricultural research: Head of MOA Research or his designee

R/S 10. Sugar Industry Research Institute: representative

R/S 11. Coconut Industry Board: representative

R/S 12. Other commodity boards: representative by rotation, mainly from the Banana, Cocoa, Citrus or Coffee Boards.

R 13. Agriculture Education: representative of the UWI/Agricultural College

R/S 14. PD (ex-office): organizer and convenor of meetings

R/S 15. Observers: non-voting representatives of donor agencies, co-opted participants, and researchers (including research program management staff).

DC = direct client or user of research
R = Research
S = Supporter

To provide continuity, their terms of office should be six years. To ensure stability, reelection of RAC members should be staggered. Therefore, every two years, in the annual meeting of the RAC, the members will be elected by thirds. Outgoing members may be reelected. The determination of the initial two-thirds to be renewed will be made randomly. Outgoing members will not participate in the deliberations and votes for their positions.

Duties of the RAC: Members will be expected to attend the annual General Assembly meetings and participate actively in them. The specific tasks of the RAC will include:

-- To discuss, modify and approve the annual workplan and budget presented by the PD through the Executive Committee.

-- To discuss and approve the financial balance sheet and reports presented by the Executive Committee, RAC subcommittees, and the PD.

-- To interpret regulations and bylaws of the research program.

-- To establish the general policy of the research program.

-- To elect the members of the Executive Committee and other subcommittees they may choose to establish.

-- To elect new members to the RAC.

-- To approve and modify, as necessary, internal regulations.

The Executive Committee: The Executive Committee, selected by the RAC from among its members, will include a Chairman, an Assistant Chairman, and four other members. The PD of the research program will act as Permanent Secretary to the Executive Committee and will have the right to vote.

The membership of the Executive Committee should be chosen bearing in mind the composition of the RAC. They will be elected by the RAC for two years.

Generally, their duties will include:

-- When recommended by the PD, to discuss, modify, and approve contracts, grants, and other proposals.

-- Approve, when necessary, minor modifications to the Annual Work Plan and Budget as proposed by the PD. Substantial changes (more than 20% of the workplan or budget approved by the RAC) should go back to the RAC, in Extraordinary Session.

-- To be informed by the PD of implementation problems, and make recommendations.

-- To be adequately informed of the operating plans and budgets approved by the RAC and to provide follow-up.

-- To authorize external evaluations of the programs.

Members will not be paid, but the RAC can setup regulations for reimbursable expenses following AID guidelines.

RELATIONSHIP BETWEEN THE JADF AND THE RESEARCH PROGRAM

Potential Benefits of a close linkage: JADF has been legally established as a non-profit organization in agriculture. If the research program is established under the aegis of JADF, it will not have to go through all the hoops of legalization as a separate institution.

The JADF works directly with agricultural clients, many of them farmers. One of the chief problems of traditional agricultural research has often been that it is not appropriate for farmers. The JADF, because of its close ties to its clients, can provide an important feedback mechanism to keep the research effort relevant.

JADF has competent leadership and staff, providing a strong administrative haven for a new program.

Potential Problems of having a Research Program within JADF: There is a potential for conflict between the goals of the JADF development banking program and the research program. First, the overall objectives of the two groups are not the same. Agricultural research is basically a scientific endeavor to provide needed technology to Jamaican farmers. This purpose overlaps with one of the seven objectives of JADF ("to introduce new technologies into Jamaica's agroindustry and agribusiness"), but is different, since the JADF focuses on improving agricultural productivity, rather than on research in processing, marketing, etc.

Also, the mandate of the JADF is structured to favor particular farm groups: the dairy industry especially and agroindustry and agribusiness. A research program, on the other hand, needs to be based on a thorough economic understanding of where productivity gains are likely to be highest for the country, leading to improved farmer income, and an improved balance of payments position. Therefore, the client groups of each project are likely to be different.

Although the Director and one other staff member have Ph.D.s in agriculture, the JADF, as an institution, lacks depth of expertise in agricultural research, a significant disadvantage for implementing a project in research. Particularly in the present Jamaican context, agricultural research planning and implementation are extremely complex. Whatever administrative strengths the JADF may offer, in terms of the substantive expertise in how to develop and manage a research effort, particularly the unique approach of "contract research" envisioned in the project, it offers no real advantages over the other implementing agencies considered.

Furthermore, while the JADF is non-profit, it is concerned that each loan be viable; its mentality is quite properly that of a venture capital firm. The appropriate attitude towards agricultural research is quite different. While benefits overall can be extraordinarily high (usually higher than any other investment in agriculture), research is a long term probability game. To adopt the short term perspective of a bank will lead to failure of the research/adoption endeavor.

There is some risk in adding a significant new element to the JADF. The JADF is a new organization, expanding rapidly in terms of staffing and new activities. One of its strengths lies in its well understood purpose. Managerially, it is possible to measure its successes in terms of that purpose. The staff is trained to work in agricultural finance. As In Search of Excellence and many other books on business development suggest, organizations can be hurt badly by acquiring new purposes and activities that are only tangentially related to their original ones.

While in the long run JADF clients should benefit from a better research system, there is no direct immediate benefit to the JADF of acquiring the responsibility for developing a national research program.

Recommendations Towards a Solution - Relationships: The research program has minimum requirements of autonomy that must be met. These include:

(1) The institutional integration of the research program into the current structure of JADF is expected to take this form:

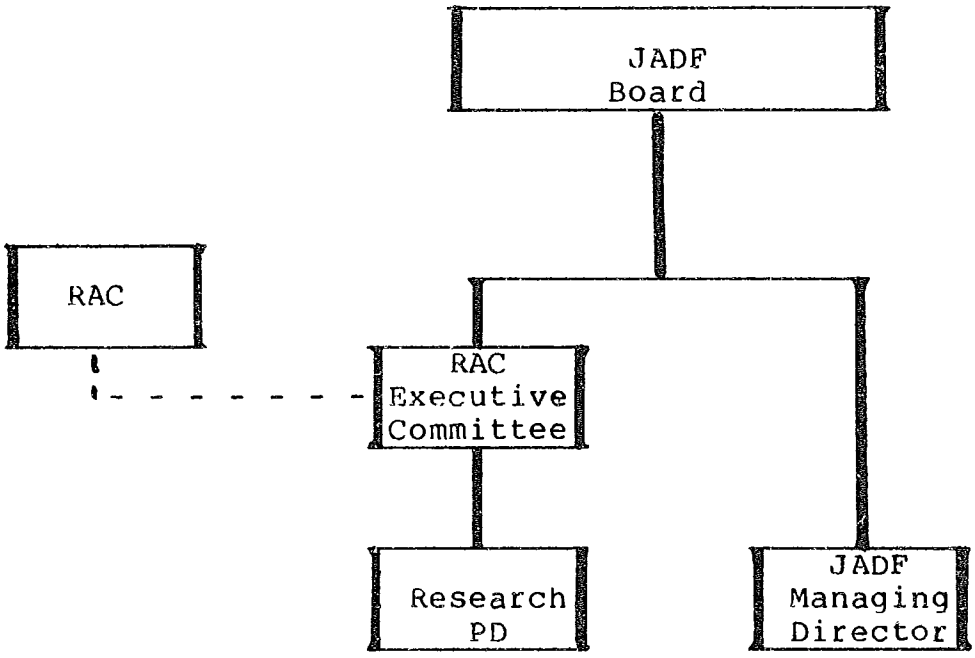

(2) The RAC will be selected by the Selection Committee independently of the JADF; however the members of the Selection Committee will have been jointly selected by USAID and the JADF.

(3) USAID will retain approval of the PD, the APD, and selected other staff contracted by JADF.

(4) Appropriate individual JADF Board members may sit on the RAC on the basis of the same criteria for selection of all RAC members. The JADF Board will provide guidance to the RAC Executive Committee with respect to financial and administrative procedures; however, JADF will not influence (except as a RAC member) the decisions of the research program with respect to research priorities and determination of contract/grant recipients. Nor should the JADF be expected to "implement" the research effort, since it does not have the necessary personnel expertise.

Recommendations Towards a Solution - Areas of Collaboration: The autonomy requirements to maintain a viable research effort are great, but there are significant opportunities for working together. As an implementing agency, the JADF can supply the administrative support necessary to the project. This might include the sharing of facilities, the use of JADF financial expertise and services, computer facilities, and/or the full time use of an accountant. JADF could find and supervise support staff and services. Finally, individual members of the JADF Board and JADF management, if made members of the RAC, can provide support for research activities and be an effective liaison between research users and the research system.

In sum, cooperation between the development banking program of JADF and the research program is highly desirable, but both need to remain essentially autonomous if each is to achieve its potential.

RECOMMENDATIONS ON INVOLVING THE RAC IN FUND RAISING

The long term success and survival of the RAC and its research program will depend on its ability to broaden the funding base. This in turn will depend on the initial success of the project in meeting its goals and in establishing good rapport with the agencies and donors involved. Ultimately, the GOJ should recognize the advantages of implementing agricultural research through an autonomous institution and become a major contributor. However, the management and RAC should plan from the outset to broaden the RAC's resource base.

The first step toward involving other donors will be to keep them informed and solicit their comments during the initial development stages of the Project. During the activation phase of the research program, principal donors should be invited to participate as observers in RAC annual meetings. On appropriate occasions - eg. every two years - the RAC should organize special meetings with prospective donors to review program development and discuss future needs. At these meetings donors may be approached about possibilities of core program funding and/or support for specific projects. This should be an attractive prospect when donors realize the RAC represents a credible and responsible institution capable of efficiently managing resources.

Another possible solution to this problem which should be examined the establishment of a perpetuating endowment based on income from capital derived from outright donations or sales of PL 480 commodities (e.g. wheat). Such an endowment amounting to about US$10 million and providing an annual disposable income of only $600,000 to $800,000 would continue the function of the research program in perpetuity. Few alternative uses for these resources

would match the long term benefit of providing a reliable source of funds for agricultural research in Jamaica.

An endowment will ensure that research programs can be planned over several years, an absolute essential if much is to be accomplished. It gives freedom from short term alterations in the political system, and ensures that political considerations will not dominate research programs. It is feasible, using the P.L. 480 program and an alliance with the JADF. Clearly it is to be hoped that the government will in the long run cooperate with the research priorities and programs established through this project, and give its own research resources to further them. The joint funding that might result from this effort would be a path-breaking opportunity to renew and revitalize agricultural research in Jamaica.

GDP in Agriculture for 1985/86 was about $194 million (US), about 9.7% of total GDP. FAO and ISNAR recommended that a national research system be funded at the level of 1 to 2% of GDP in agriculture. That would argue that for Jamaica the research budget should be between $1.94 and $3.88 million (US). Considering the high proportion of the Jamaican labor force active in agriculture, the goal should probably be towards the higher figure. In setting out the endowment, the goal should be to work towards the FAO and ISNAR figure.

INITIAL ENVIRONMENTAL EXAMINATION

Project Location	:	Jamaica
Project Title	:	Agricultural Research
Funding (LOP)	:	$7,600,000
Life of Project	:	Seven Years (FY 1986 - 93)
IEE Prepared By	:	James J. Talbot Regional Environmental Management Specialist/Caribbean

James J. Talbot — 5/15/86
Date

Recommended Threshold Decision : Positive Determination Requiring Environmental Assessment of Pesticides.

Justification: Assumes on-farm crop trials and subsequent crop protection will necessitate procurement/use of pesticide. An attempt will be made to identify a list of probable pesticides during PP stage. If this is not possible, a list should be identified as early as practicable during project implementation. Field applications of pesticides cannot commence until the EA and any requisite training are completed.

Concurrence : William Josiah — 6/13/86
Date

William Josiah
Director
USAID/Jamaica

AGENCY FOR INTERNATIONAL DEVELOPMENT
WASHINGTON, D.C. 20523

002309

LAC/DR-IEE-86-23

ENVIRONMENTAL THRESHOLD DECISION

Project Location	:	Jamaica
Project Title and Number	:	Agricultural Research 532-0128
Funding	:	$7,600,000 (G)
Life of Project	:	Seven Years (FY 1986 - 93)
IEE Prepared by	:	James J. Talbot Regional Environmental Officer
Recommended Threshold Decision	:	Positive Determination Requiring Environmental Assessment of Pesticides
Bureau Threshold Decision	:	Concur with Recommendation
Comments	:	E.A. must be approved by Chief Environmental Officer prior to procurement or use of any pesticides under the project.
Copy to	:	William Joslin, Director USAID/Kingston
Copy to	:	James J. Talbot, USAID/Port-au-Prince
Copy to	:	Eric Zallman, LAC/DR
Copy to	:	IEE File

DATE RECEIVED: 7/29
ACTION OFFICE: ARDO
INFO TO:
DIR ✓ ARDO
D/D ✓
OPDS ✓
OEEE ✓
R.F. ✓
DUE BY: 8/11
ACTION:

Marea E. Hatziolos Date July 14, 1986

Marea E. Hatziolos
Deputy Environmental Officer
Bureau for Latin America
and the Caribbean

Annex F
Environmental Assessment

BACKGROUND AND RATIONALE

Agriculture, employing ca. 40% of the populus, has historically played a major role in the Jamaican economy. Traditionally, the major portion of agriculture in Jamaica has been focused on export crops such as sugar, coffee, bananas, cocoa, pimento and ginger. In recent years, even sugar and bananas (major export crops) have declined. More recently, non-traditional export crops (including yams, vegetables, plantains, citrus and mangoes) have increased in importance.

A primary concern of USAID/Jamaica's Agricultural Research Project is to promote diversified cropping systems which will contribute to foreign exchange earnings and savings. Accomplishment of this objective entails (1) private sector investment in non-traditional export crops, (2) improvement in agricultural production technologies, and (3) development of a coordinated research and extension plan among the various Jamaican agencies (public and private) now conducting agricultural research and extension activities.

The Agricultural Research Project will utilize an, as yet unspecified, Research Advisory Council to identify priority crops and problems needful of solution. Via special grants and/or formal contracts (to public and/or private individuals, organizations, national and international institutions, private farmers, commodity boards, etc.,) specific adaptive/applied agricultural research will be conducted. Thus, it is difficult to identify all target crops initially. Scientific personnel exchanges, short term training and minor rehabilitation of existing facilities will also be a part of this project.

On-farm testing of production/protection technologies is considered a vital ingredient in this project. Immediate beneficiaries would be participating farmers and, via the "multiplier effect", other farmers who learn basically from their farmer peers. Women farmers (comprising ca. 24% of all Jamaican farmers and controlling ca. 12% of all cultivated acreage) are to play a strong role in this project. They perform most weeding, share in harvesting and play the central role in marketing of local crops. Thus, women are to be of major concern in the project's on-farm research and evaluation.

Among the pest management tactics commonly used are pesticides. To evaluate the potential environmental impact pesticides used under the Agricultural Research Project may have, an Environmental Assessment (EA) was conducted. What follows is the results of this EA.

ENVIRONMENTAL ASSESSMENT

To meet its objectives, the Agricultural Research Project will require some pesticides for use in research plots, farmer demonstrations, and training. This project may propose operational pest control programs within which pesticides play a major or minor role. It is AID policy to try and use only pesticides that the U.S. EPA has registered for "general use" without restriction. In the U.S., pesticides in the general use category can be purchased and used without special permits. By contrast, "restricted" pesticides present high risks to humans or the environment. If any restricted pesticide is used in an AID project in any way other than small-scale experimentation, a training component must be included and protective equipment provided.

A. Project Background:

Project Location	:	Jamaica
Name of AID Project	:	Agricultural Research Project
Number of AID Project	:	532-0128
Project Implementor	:	USAID/Jamaica
Life of Project	:	7 years (FY 1986-93)
Funding	:	$7,600,000
IEE Prepared by	:	James J. Talbot, Regional Environmental Management Specialist/Caribbean
PID Approved by	:	William R. Joslin, Director USAID/Jamaica 6/13/86

B. ENVIRONMENTAL ASSESSMENT

Prior to disbursement of AID funds into the Agricultural Research Project, an Environmental Assessment (EA) for pesticides which may be used in the project was required.

The EA has been prepared in accordance with AID's Environmental Procedures (22 CFR Part 216) of Regulation 16 of the Code of Federal Regulations. It describes the pesticides and handling methods and sets forth procedures to minimize the adverse effects, as specified under Pesticide Procedures, Paragraph 216.3 (b) (1) (i) of Regulation 16.

In the EA, the term "pest" includes any group of organisms - insects, bacteria, viruses, weeds, nematodes, snails, slugs, birds, rodents, or others - that adversely affect the production, preservation, or use of agricultural plants (including seed and planting stock) or harvested products. "Pesticide" is any chemical preparation used to kill, repel, mitigate, destroy, or

stop the action of pest populations and includes the following: (1) insecticides (to control insects), (2) acaricides (to control mites), (3) herbicides (to control weeds), (4) fungicides (to control fungi, molds, etc.), (5) nematicides (to control nematodes - small roundworms), and (6) rodenticides (to control rodents).

1. EPA Registration Status of the Proposed Pesticides

In the USA, pesticides are registered by the Environmental Protection Agency. The EPA registers a pesticide product in one of two categories: "restricted use" or "general use". A restricted use pesticide is available for purchase and use only by pesticide applicators who are certified by law. It presents a very high toxicity and/or environmental hazard. A general use pesticide, by contrast, is available for purchase and use by the general public.

Table 1 shows pesticides available for use in the Agricultural Research Project. Three of the proposed pesticides are in EPA's restricted use category because of high hazards to users:

* dimethoate (ROGOR), an insecticide/acaracide,
* paraquat (GRAMOXONE), a herbicide, and
* metaldehyde (METALDEHYDE), a molluscicide.

The following summarizes AID's policy concerning use of such EPA restricted pesticides in projects that the Agency Finances:

The user hazards must be evaluated in the Environmental Assessment. The EA should indicate the risks and specify technical assistance required to mitigate the risks. If any restricted chemical is to be used in any other way than small-scale experimentation, a training component must be included. However, restricted pesticides are not routinely incorporated into AID projects because of the difficulty encountered when large numbers of farmers must be trained. A preferred alternative is to seek an acceptable cost-effective substitute.

The Pesticide Advisory Council (Ministry of Health) is aware of dimethoate, paraquat and metaldehyde hazards and has classified them "restricted" pesticides. Such a pesticide is available only to certified users. The Agricultural Research Project does not plan to distribute these three or any other pesticide to farmers. Use of dimethoate would be for small-scale experimentation, training, demonstrating safe use to farmers, or small-scale control programs carried out by project staff. Metaldehyde can be used with the restriction that the label must bear the words "this pesticide may be fatal to children and dogs or other pets if eaten. Keep children and pets out of treated area". For all cases, protective clothing will be worn.

Table 1. Pesticide Proposed for use in Crops Indicated and for Experimental or Supervised use in Crops Which Cannot be Identified. Also Shown are EPA Registration Status and Signal Words and Toxicities of Listed Pesticides.

Common Name and (Brand Name)	Action	EPA Registration Category	Tomato	Potato	Egg Plant	Sweet Potato	Yam	Cassava	Pigeon Pea	Cow Pea	Red Kidney Bean	Lima Bean	Crucifers	Cereals	Lettuce	Carrots	Calaloo	Beans	Turnip	Okra	Experimental or Supervised Use
Benomyl (BENLATE)	Fungicide	General		X*	X*									X*							X
Bti (DIPEL)	Insecticide	General	X										X	X	X		X	X		X	
Captan (CAPTAN)	Fungicide	General (RPAR)	X						X*	X*	X*	X*									
Carbaryl (SEVIN)	Insecticide	General			X					X	X	X				X	X*				
Captafol (DIFOLATAN)	Fungicide	General												X*							X
Carbofuran (FURADAN)	Insecticide Acaricide Nematicide	General[1/]	X										X								X
Copper hydroxide (KOCIDE)	Fungicide	General																			X
Copper oxychloride (CUPRAVIT)	Fungicide	General	X*	X*	X*				X*	X*		X*	X*								
Coumatetralyl (RACUMIN)	Rodenticide	Not Cleared																			X
Daconate (DCPA)	Herbicide	General											X*								X
Deltamethrin (DECIS)	Insecticide	General											X*								

Page 2 of Table 1

Common Name and (Brand Name)	Action	EPA Registration Category	Tomato	Potato	Egg Plant	Sweet Potato	Yam	Cassava	Pigeon Pea	Cow Pea	Red Kidney Bean	Lima Bean	Crucifers	Cereals	Lettuce	Carrots	Calaloo	Beans	Turnip	Okra	Experimental or Supervised Use
Demeron methyl (METASYSTOX)	Insecticide Acaricide	General																			X
Diazinon (BASUDIN)	Insecticide	General	X*			X*		X*	X*	X*	X*	X*		X*	X		X*				
Dibromochloropropane (NEMAGON)	Nematicide	Not Cleared																			X
Dicofol (KELTHANE)	Acarcide	General						X*													X
Dimethoate (ROGOR)	Insecticide Acaricide	Restricted	X					X*			X*										
Fenthion (FENTHION)	Insecticide	General																			X
Fluazifop-butyl (FUSILADE)	Herbicide	General		X*	X*								X*								
Glyphosate (ROUNDUP)	Herbicide	General													X	X	X	X	X	X	
Malathion (MALATHION)	Insecticide	General	X			X*			X*	X	X			X*	X	X*	X*	X	X	X*	

Common Name and (Brand Name)	Action	EPA Registration Category	Tomato	Potato	Egg Plant	Sweet Potato	Yam	Cassava	Pigeon Pea	Cow Pea	Red Kidney Bean	Lima Bean	Crucifers	Cereals	Lettuce	Carrots	Calaloo	Beans	Turnip	Okra	Experimental or Supervised Use
Maneb (MANZATE)	Fungicide	General	X	X	X*				X*	X*		X								X*	
Metalaxyl (RIDOMIL)	Fungicide	Conditional		X*	X*									X*							X
Methomyl (LANNATE)	Insecticide	General												X*	X	X*	X*	X	X*	X*	
Mevinphos (PHOSDRIN)	Insecticide Acaricide	General																			X
Monocrotophos (AZODRIN)	Insecticide Acaricide	General																			X
Metaldehyde (METALDEHYDE)	Molluscicide	Restricted	X*	X*	X*	X*	X*		X*	X*	X*	X*			X*	X*	X*	X*	X*	X*	
Oxamyl (VYDATE)	Insecticide Nematicide Acaricide	General	X*																		X
Paraquat (GRAMOXONE)	Herbicide	Restricted		X	X*								X								
Propineb (ANTRACOL)	Fungicide	Not Cleared																			X
Spreader-Sticker (TRITON)	Film Extender	General																			X
Thiram (THIRAM)	Fungicide Animal Repellant	-----																			X

Common Name and (Brand Name)	Action	EPA Registration Category	Tomato	Potato	Egg Plant	Sweet Potato	Yam	Cassava	Pigeon Pea	Cow Pea	Red Kidney Bean	Lima Bean	Crucifers	Cereals	Lettuce	Carrots	Calaloo	Beans	Turnip	Okra	Experimental or	Supervised use
Trichlorfon (DIPTEREX)	Insecticide	General												X			X*					
Warfarin (WARFARIN)	Rodenticide	Not Cleared																				X
Zineb (ZINEB)	Fungicide	General																				X

* Residue tolerances have not been established by EPA or recommended by FAO/WHO.

1/ Granular Formulations of Carbofuran are not restricted, but all concentrate suspensions and wettable powders 40% and greater are . FURADAN 10% granules are proposed here.

Paraquat presently is used widely in Jamaica, and there is no known substitute per se. A partially effective alternative is the herbicide glyphosate (ROUNDUP). Use of glyphosate would greatly reduce the hazards (see Table 2 for comparison in toxicity of paraquat and glyphosate). Research in Cook Islands (South Pacific) has shown that, when mixed with the common fertilizer urea, glyphosate is effective at reduced rates and therefore less costly. This AID Project affords an opportunity to test this approach in Jamaica and to seek other cost effective alternatives, both chemical and nonchemical, to paraquat and other pesticides that present high risks.

This project will sponsor an effective training component on pesticide safety and will provide protective equipment and clothing to project staff. In addition, the project will provide considerable technical assistance in pesticide management to seek safe, cost effective pesticide application techniques.

Not all the pesticides in Table 1 have been registered by EPA for use in the U.S. (noted as "not cleared" under EPA registration category). However, the FAO and WHO of the United Nations have recommended "residue tolerances" for some of these materials. A residue tolerance is the amount (expressed in parts per million) of pesticide that may legally and safely remain in or on any raw farm products at the time these products are sold for consumption by humans or livestock. Another aspect of this project will be to provide assistance in seeking pesticides for use on export crops that meet EPA or FAO/WHO criteria.

One of the pesticides in Table 1 has been issued (or has ingredients that have been issued) a so-called "Rebuttable Presumption Against Registration" (RPAR) by EPA:

*captan (CAPTAN).

The RPAR process is designed to gather information and stimulate public debate about a pesticide being scrutinized because of adverse effects on human health or environment. If at the end of this process the risks are found to outweigh the benefits, the pesticide may be cancelled (banned) or greatly restricted in the U.S. Section 5 discusses why an RPAR has been issued for captan (CAPTAN).

2. The Basis for Selection of the Proposed Pesticides

After discussions with USAID/Jamaica staff, Janice Reid and Joe Suah (CARDI), Florence King and David Ellis (Plant Protection, MOA), Patience Dennis and Lester Woolery (Ministry of Health), Stewart Hansen (Geddes Grant, Ltd.), the list in Table 1 was compiled. The pesticides are presently registered for use in Jamaica, are locally available and are effective.

3. Extent to which the Proposed Pesticide Use is Part of an Integrated Pest Management Program

Reliance on pesticides alone is expensive and rarely gives lasting control. Pests often become physiologically or behaviorally resistant to pesticides used extensively. Such resistant pest strains offer serious consequences to both farmer and the general public. Resistance is most likely to occur in areas where sole reliance is placed on pesticides and the use is heavy.

Experience worldwide has shown that the best way to avoid pest resistance and also to increase and sustain agricultural production is to employ a variety of control tactics, including biological (predator, parasite and pathogen natural enemies of pests), genetic, physical and legislative. This multi-tactic, balanced approach is termed integrated pest management (IPM).

Under IPM, crops are regularly monitored (called "scouting") for presence of pests, natural enemies and other factors which may influence a decision concerning a control measure. Pesticides are applied only if pest populations have exceeded unacceptable density levels and there is reasonable assurance that pesticide use will be profitable and non-disturbing to the environment.

The IPM concept is currently playing a strong role in Jamaican agriculture. Multi-tactic approaches can now be found; however, much improvement can be made in monitoring programs and use of economic injury levels and thresholds. This AID project may support some research, training and technical assistance to advance IPM concepts and techniques in Jamaica. However, development and implementation of IPM will be a long term undertaking. During the 7 year duration of this project, one should see movement toward IPM where pesticides are truly used only on an "as needed" basis.

4. The Proposed Methods of Application, including Availability of Appropriate Application and Safety Equipment

If pesticides are used, the project would utilize both gasoline-powered and hydraulic backpack sprayers. Foliar applications would be made primarily with these sprayers, however, in some cases, mist blowers would be used. Granular pesticides would be incorporated in the soil, and rat baits would be selectively placed in known rat habitats. Fumigants would be dispensed from their small, pressurized containers.

The project will provide and enforce the use of all appropriate protective devices and clothing-face masks, gloves, boots, and coveralls - for project personnel who apply pesticides. Agreement must be reached with all project contractees or grantees that the

highest safety standards are upheld, and costs for protective devices and clothing must be a part of contract/grant budgets let by this project if pesticide use is proposed. It is the Project Manager's responsibility to see that pesticides are transported, stored, mixed, applied, and disposed of properly as specified on the pesticide's label. He will enforce all recommendations, rates and frequency of application, time of application, and the number of days before harvest the pesticide may be applied. Failure to meet label standards will be grounds for the project manager's cancellation of specific grants or contracts let by this project.

Pesticides should be stored in their original containers in a facility specifically designated for that purpose. The facility should be locked with keys assigned only to authorized personnel. A sign reading "DANGER: PESTICIDE STORAGE AREA" should be posted. Pesticides should never be stored near food, animal feed, animals or drinking water. The storage place should be in an area protected from tropical storms and fire hazards.

Empty containers should never be reused - there is no practical method for removing all of the toxic residues

Liquid containers should be treated as follows: empty the container's content into the spray tank, drain in a vertical position for 30 seconds. Refill the container 1/4 full, rinse and pour into the tank, drain. Repeat rinsing and draining three times. Use the rinse water in the sprayer. Punch several large holes in the container's bottom. Bury the container in a designated land disposal site on high ground away from water.

Containers and small quantities of leftover pesticides should be buried in pits in the soil about 1/2 meter deep. Bottoms and sides of the pits should be lined with lime, carbon, charcoal, or organic matter such as leaves, straw or other plant debris. Any of these materials is a good absorbent and facilitates breakdown of the chemical. The pits should be refilled and mounded above ground level with the soil. Empty paper containers and bags also should be buried in similar burial pits. The project will initiate an intensive training program in pesticide safety and management for project personnel and collaborators.

5. Acute and Long Term Chronic Hazards, either Human or Environmental, Associated with the use of Pesticides and Measures Available to Mitigate the Hazards

All pesticides are potentially hazardous to humans and the environment and should be treated with caution regardless of their relative toxicity. The potential health hazard depends on the toxicity and the amounts swallowed, absorbed or inhaled. The relative toxicity of a pesticide can be found by examining its

LD_{50} value which is the amount of the chemical necessary to kill 50% of the test animal population (usually laboratory rats). It is expressed in the weight of pesticide per unit weight of body (mg/kg) when swallowed (oral toxicity), absorbed through the skin (dermal toxicity) or inhaled. The latter value, inhalation toxicity, is usually expressed in parts per million per unit volume of air.

Pesticides with the lowest LD_{50} valves are potentially the most toxic to humans. Ingestion of just a few drops to a teaspoon of a pesticide with an oral LD_{50} value of less than 50 might be sufficient to kill an adult person. An adult would probably have to consume 16 tablespoon or 1/2 kilogram or more of a pesticide with an oral LD_{50} of 5,000 before dying. However, the pesticide's formulation, percentage active ingredient, and other factors determine its actual hazard level. Rodenticides (rat poisons), for example, have low oral toxicity values but would be considered only moderately hazardous to humans because their pellet formulations contain only about 2% active ingredients.

Acute oral and dermal LD_{50} values of the proposed pesticides are shown in Table 2. Acute toxicity results from a severe case of poisoning due to a single dose of exposure to the pesticide.

Table 2 shows EPA's "signal word" for each proposed pesticide. These words have been assigned by levels of toxicity and appear on the labels of EPA registered pesticides. Table 3 gives criteria for signal word designation. Pesticides assigned the signal word "DANGER" are highly toxic compounds and are not recommended by EPA for general use. Materials showing the words "WARNING" or "POISON" also present a high potential hazard to the user.

As noted in section 1, EPA has issued a RPAR against one of the proposed pesticides. Captan has been accused of causing tumors and toxic effects on the liver and kidney. The RPAR process is a continuing activity, and the EPA will not take final action on a RPAR pesticide until the process is completed. Ultimately, the only valid source for information concerning legal use of EPA registered pesticides is the pesticide labels. The label should always be followed carefully, as this best assures minimum hazard to users.

The proposed pesticides are generally non-persistant and, if used in accordance with their labels, should present no unusual hazards to the natural environment (see Section 7). The project will share with the Pesticide Advisory Commission (Ministry of Health) information concerning toxicity of pesticides and procedures for mitigating hazards.

TABLE 2

Toxicity of Proposed Pesticides

Common Name and (Brand Name)	Acute LD_{50} Oral	Acute LD_{50} Dermal	EPA Signal Word 1/
Benomyl (BENLATE)	>10,000	>10,000	CAUTION
Bti (DIPEL)	-	-	CAUTION
Captan (CAPTAN)	9,000	-	CAUTION or DANGER
Carbaryl (SEVIN)	850	-	CAUTION or DANGER
Captafol (DIFOLATAN)	5,000-6,200	-	WARNING
Carbofuran (FURADAN)	11	10,200	WARNING or DANGER
Copper hydroxide (KOCIDE)	1,000	-	CAUTION
Copper oxychloride (CUPRAVIT)	1,000	-	-
Coumatetralyl (RACUMIN)	-	-	-
Daconate (DCPA)	>10,000	>10,000	CAUTION
Deltamethrin (DECIS)	128-5,000	>2,000	-
Demeron Methyl (METASYSTOX)	170-300	260-410	WARNING
Diazinon (BASUDIN)	300-400	3,600	CAUTION
Dibromochloropropane (NEMAGON)	170-300	260-410	WARNING
Dicofol (KELTHANE)	684-809	2,100	CAUTION
Dimethoate (ROGOR)	215	>1,000	WARNING
Fenthion (FENTHION)	255-298	1,680-2,830	-
Fluazifop-butyl (FUSILADE)	1,490-3,328	2,420	CAUTION or WARNING
Glyphosate (ROUNDUP)	4,300-4,900	-	CAUTION
Malathion (MALATHION)	1,000-1,375	4,100	CAUTION
Maneb (MANZATE)	7,990	-	CAUTION
Metalaxyl (RIDOMIL)	669	>3,100	WARNING
Methomyl (LANNATE)	17-24	5,880	DANGER or POISON
Mevinphos (PHOSDRIN)	4.15	57	DANGER or POISON
Monocrotophos (AZODRIN)	8-23	354	DANGER or POISON
Oxamly (VYDATE)	37	2,960	DANGER
Metaldehyde (METALDEHYDE)	250-1,000	630	CAUTION or WARNING
Paraquat (GRAMOXONE)	150	-	DANGER
Propineb (ANTRACOL)	5,000	>5,000	-
Spreader-Streker (TRITON)	-	-	WARNING or CAUTION
Thiram (THIRAM)	780	-	CAUTION
Trichlorfon (DIPTEREX)	150-400	>500	WARNING
Warfarin (WARFARIN)	3	-	WARNING or CAUTION
Zineb (ZINEB)	5,200	>2,500	-

1/ See TABLE 3 for explanation. More than one signal word indicates a difference in formulation (dry vs. liquid) or percentage active ingredient.

TABLE 3

Toxicity Categories of Proposed Pesticides by Hazard Indicator

Hazard Indicators	I[1/]	II	III	IV
Oral LD_{50}	50 mg/kg or less	50-500 mg/kg	500-5,000 mg/kg	>5,000 mg/kg
Inhalation LD_{50}	.2 mg/liter or less	.2-2 mg/liter	2.0-20 mg/liter	>20 mg/liter
Dermal LD_{50}	200 mg/kg or less	200-2,000 mg/kg	2,000-20,000 mg/kg	>20,000 mg/kg
Eye Effects	Corrosive; corneal opacity not reversible within 7 days	Corneal opacity reversible within 7 days; irritation persisting for 7 days	No corneal opacity; irritation reversible within 7 days	No irritation
Skin Effects	Corrosive	Severe irritation at 72 hours	Moderate irritation at 72 hours	Mild or slight irritation at 72 hours
EPA Signal Word	"DANGER"	"WARNING"	"CAUTION"	"CAUTION"

1/ The word "POISON" and also a picture of skull and crossbones appear on the labels of EPA registered in Category I.

6. The Effectiveness of the Requested Pesticides for the Proposed Uses

The pesticides listed earlier have been evaluated under a variety of conditions including those of the Caribbean region and found to be effective for the purposes intended in the project. However, cost effectiveness of these various materials has not been rigorously tested. One of the objectives of this project will be to conduct cost/benefit analyses of all inputs. This could likely take the form of a specific grant or contract let under the umbrella project.

7. Effect of the Proposed Pesticides on the Target and Non-Target Ecosystems

The pesticides are generally non-persistent and, if used correctly and according to their labels, should present no unusual hazards to the target or natural ecosystem. Applying higher dosages, shrinking intervals between applications, spraying during windy conditions, storing or disposing carelessly or rinsing equipment and/or containers in rivers would have harmful effects.

Most suggested insecticides are toxic to some of the natural enemies and bees, especially if applied at high rates. Thus, populations of natural enemies and bees residing in treated experimental, demonstration or control plots would likely decrease. Further, the threat of buildup of genetically resistant strains of insect pests, plant diseases, weeds, nematodes and rats always exists.

Some of these problems are unavoidable when pesticides are used. Minimal adverse effects result only when pesticides are used in combination with other control tactics in an IPM program and when users are educated to the hazards and proper use of the materials. In cases where pest control is necessary, the project will emphasize IPM and pesticide management and, through special training on these subjects, foster a more rational use of the materials.

8. Conditions under which the Pesticides are to be used Including Climate, Flora, Fauna, Geography, Hydrology and Soil

Jamaica lies ca. 500 miles southeast of the USA and ca. 90 miles south of Cuba. It is the third largest island in the Caribbean. Jamaica is composed of ca. 10,991 sq. km (4,244 sq. miles) and possess a population of approximately 2 million people. With Cuba, Hispaniola (Haiti and the Dominican Republic) and Puerto Rico, Jamaica forms a group known as the Greater Antilles.

Mountains cover ca. 80% of Jamaica's surface, with the highest being the Blue Mountains (7,402 ft.). Climate is humid and tropical (21-27°C) rainfall is seasonal (April-June, September-November) and ranges from 50-150 inches/year depending upon location (77 inches/year average). Coastal regions offer sandy beaches and several natural inlets.

Rich soil (70+ soil types) and abundant rainfall make Jamaica well suited for agriculture, and agriculture employs ca. 40% of the Jamaican populus. Farmers generally have small holdings and limited capital. More than 80% of the land in Jamaica can be classified as "hillside agriculture", and there are ca. 120,000 hillside Jamaican farmers. The typical farm and rural family is composed of 4.2 persons; thus, ca. 1/3 of the island's population depends directly on the small farm sector. Typical crop mixtures are bananas, scattered fruit trees, assorted vegetables, and a subsistence root crop (e.g., yam). Most holdings include some fallow land and livestock.

9. Availability and Effectiveness of other Pesticides or Nonchemical Control Methods

Proposed pesticides, as well as others, are available through commercial outlets in Jamaica.

Crop rotation, use of clean (pest free) planting material, destruction of diseased crop plants, crop residue destruction, biological control and a host of other cultural practices reduce pest severity. This project will develop and encourage use of these kinds of nonchemical control methods in its programs.

For example, if a cabbage project is funded, presence of the diamond-back moth, *Plutella xylostella* (L) will most likely be a problem. Successes of the Commonwealth Institute of Biological Control (CIBC, Trinidad) with releasing the parasite, *Apanteles plutella*, against diamond-back moth should be noted. This project should establish a strong relationship with CIBC and attempt to exploit biological control successes.

Further, demonstration and experimental plots under the guise of this project should be comprised of a variety of alternative, legitimate control tactics aimed at evaluation of cost/benefit of what will emerge as "options" for ultimate farmer user groups. This is a prime methodology for educating farmers to concepts of multiple and alternative tactics.

10. Jamaica's Ability to Regulate or Control the Distribution, Storage, Use and Disposal of the Requested Pesticides

The Pesticide Control Act of 1975 provides for the control of the importation, sale, storage and use of pesticides in Jamaica. Since 1975, responsibility for this control has fluctuated between the Ministry of Agriculture and the Ministry of Health. In 1986, the Pesticide Advisory Commission (also known as the Woolery Commission from its chairman, Lester Woolery) proposed to Parliament that pesticide regulation be housed in the Ministry of Health and that a Poisonous Information center be established to collect and distribute information on toxic compounds and prevention/antidotes. A government chemist, Ms. Patience Dennis, is in place. Like many other situations, there is a discrepancy between power and enforcement, and, from all appearances, enforcement is not currently strong.

This project affords an opportunity to stimulate more active participation of the Pesticides Advisory Commission and to allow the Ministries of Agriculture, Health and Industry and Commerce (which certifies PCO's) to begin to work in concert.

11. The Provisions made for Training of Users and Applicators of Pesticides

Training in IPM and pesticide management for project personnel and relevant collaborations will be emphasized. A special training course, and necessary follow-up, will be funded in this project. Training is detailed in a separate report.

12. The Provisions made for Monitoring the Use and Effectiveness of the Pesticides

The project manager, in concert with the Pesticides Advisory Commission, will monitor use of pesticides in the project and insure that they are being handled correctly and safely.

Where not already known, pesticide residue analyses will be facilitated and actively promoted by the project manager. Conducting residue analyses may be made a part of the stipulations of any contract or grant let by this project. Such analyses may best be approached by working in concert with CARDI, the Ministry of Agriculture's Plant Protection Division and the Pesticides Advisory Commission. Focus should be made, at least initially, on project experimental or demonstration plots. This will be a vital responsibility not only for the food used for local consumption but also any that may enter export channels.

The primary location for principal contract experimental and demonstration plots will most likely be the Bodles Experiment Station. These plots will be utilized, where applicable, in the "hands-on" portion of the training course sponsored by this project.

C. Requests for Additional Pesticides and/or Information

If project personnel determine a need for pesticides not in Table 1 or if they need additional information about the pesticides or EA procedures, they should notify USAID/Jamaica. This AID office can contact AID's Bureau of Science and Technology, Office of Agriculture (Attention: C. W. Collier) for any needed assistance. Before any actual demonstrations to/with farmers of pesticides not in Table 1, specific labels and compounds must be reviewed by the Bureau Environmental Officer. This, most likely, will involve AID's American Association for the Advancement of Science (AAAS) Fellows conducting such reviews.

D. Contributors

The EA was prepared by Carl S. Barfield, Professor of Entomology, University of Florida, as a Consultant to the Consortium For International Crop Protection, College Park, Maryland. The following persons in Jamaica were consulted for information used in preparing the EA:

MOA (Plant Protection)

David Ellis, Head
Florence Young (also President Jamaica Agromedical Association)

CARDI

Joe Suah, Head
Janice Reid

AID

Mark Nolan
Leland Voth

Ministry of Health

Patience Dennis
Lester Woolery, Chairman, Pesticide Advisory Commission

USDA/APHIS

Ralph Iwamoto (Jamaica)

SUGGESTED TRAINING PROGRAM IN IPM AND PESTICIDE MANAGEMENT

Rationale

USAID/Jamaica has approved Project Identification Documents (PID's) for two new projects: (1) Agricultural Research (AID Project Number 532-0128) and (2) Hillside Agriculture (532-0101). Environmental assessments (EA's) for both projects have been completed. Although the pesticides proposed for use in both projects are generally non-persistent and should cause no unusual deleterious effects if used safely and according to their labels, some pesticides proposed are classified as "restricted" by the U.S. Environmental Protection Agency. It is AID policy, when restricted use pesticides are proposed for use in AID funded projects, that acceptable cost-effective substitutes be sought. If no adequate alternatives can be found or if such compounds are to be used by project collaborators, AID policy requires that a training component and protective equipment be included. This document presents the training component proposed for both the aforementioned projects.

The nature of both AID projects is such that grant solicitations will be a major mechanism for funding specific research efforts. Where advisory panels identify priority needs, and those needs are not addressed by in-coming proposals, special contracts will be let to address those identified needs. In total, both grants and contracts could encompass Jamaican institutions (e.g., Ministry of Agriculture), regional institutions (e.g., CARDI), crop boards (e.g., the Cocoa Board), private farmers and/or farmer organizations. Until the grant/contract process is initiated, it is impossible to identify exactly what organizations or individuals will be included in the 7 year span of both projects.

One can safely surmise that, during the 14 project-years encompasses in both AID projects, all of the above groups will be involved at some time. Further, individuals in all the above categories will be involved in using general and restricted use pesticides. Since users of these two EPA pesticide registration categories require differential training, a mechanism must exist which allows broad initial training for individuals so that they become certified to apply both general and restricted use compounds. This initial group should be carefully selected, as much as is feasible, to represent all the aforementioned categories of grantees/contractees. This might best be accomplished via an AID sponsored training session where expert trainers, in concert with selected Jamaicans, are brought in to conduct an intensive course -- one that will result in course participants being classified as "certified applicators". This initial cadre of certified applicators could assist in training and practical demonstrations in future training courses.

Following the initial, intensive training course, there will be need for institutionalizing training within Jamaica. Such a training unit for IPM and Pesticide Management could be provided technical assistance and backstopping via AID funded foreign technical assistance. Therein, the Jamaican training unit could develop tailor-made training modules to be offered "on demand". The two current (and future) AID projects could then be afforded the opportunity to put covenants in each grant or contract funded saying, in effect, "any individuals in this project using general and/or restricted pesticides must agree to participate in the training offered at (to be named)". This mechanism would allow the to-be-identified Jamaican training unit to tailor-make training for (individuals in) agencies and/or farmers participating in the two AID projects. Length of training and intensity will, of course, depend upon whether individuals want certification as users of general or restricted pesticides. Mode of training must be compatible with trainee education and literacy levels. This tailored, "on-demand" training would appear to be the most appropriate avenue to support required training in the two AID projects targeted here. Once institutionalized and functional, such a training unit could serve Jamaican agriculture far beyond the scope of the present two projects. This training proposal addresses both the initial training course and the institutionalization of IPM and Pesticide Management training in Jamaica.

Certification

The ultimate purpose of training is to produce card carrying, certified pesticide users who have undergone appropriate training in route to certification. The proposed initial training course (see later sections) will utilize written and practical exams to evaluate participant comprehension. It is suggested here that an average score of 75 be required before certification is awarded. AID/Jamaica may even want to consider an average score of 80 being necessary.

AID/Jamaica and utilized experts cannot legitimately certify Jamaican pesticide applicators. Currently pest control operators (PCO's) in Jamaica are certified by the Ministry of Industry and Commerce. These certification individuals accept advise and council from the Pesticides Advisory Commission. Both the initial training effort and subsequent institutionalized training must make the appropriate Jamaican officials aware of the course content and evaluation criteria being proposed. The ideal situation would be for the Jamaican Government to approve AID's training effort and accept its graduates as certified applicators of pesticides in Jamaica. All participants in proposed training courses who perform successfully should be provided "certification

certificates" and added to any Government of Jamaica master list of such qualified applicators. Consideration must be given to any stipulations requiring refresher courses to retain certification. It is suggested here that a short refresher course for re-certification be required every 3 years.

Initial Training: Who Participates?

If specific grants or contracts are awarded before the initial training session, some of the participants in the inaugural course will be identifiable. In any case, a mechanism must exist to select the first class of trainees. As no single individual likely has sufficiently broad knowledge to make this selection process, a committee seems appropriate.

It is suggested that the participants selection committee be composed of the following individuals (some unnamed here):

1. the USAID/Jamaica project leader for both AID grants,
2. Joe Suah, Head, CARDI,
3. Florence Young, representing both MOA and JAMA,
4. a representative from the UWI agricultural faculty, and
5. an innovative, recognized Jamaican farmer.

While USAID/Jamaica may recognize need to expand or contract this list of committee members, the ultimate group should be small enough to be functional. Obviously, not every Jamaican agricultural entity can be represented at the onset.

This committee should be assembled under the gavel of the AID Project Director(s) and should undertake two missions. First, the participants of the inaugural course should be selected. These first students should encompass the broadest possible range from Ministry-level employees to farmers. Granted, it may be difficult to get farmers to spend 1+ weeks away from the farm, but such should be explored.

The second committee mandate should be to meet formally with the appropriate Jamaican authorities and seek government-level approval for students successfully completing this, and future, training in IPM and Pesticide Management. Following the inaugural course, this committee may decide to remain functional and play some role in the proposed institutionalized, "on-demand", training.

Initial Training: When, Where, How Many?

When the initial training course is offered depends, in large part, on when AID actually receives spendable money for both projects. Structural, budget and grant/contract logistics may well mean a 6 month+ time lag between project initiation and abilities to hold a formal training course. In any event, I would encourage that the initial course be held as soon as possible in order to facilitate production of a cadre of certified applicators. This would address EPA's concerns and would foster quicker development of the "on demand", tailored training critical to project grants/contracts.

The Ministry of Agriculture's Training Center at Twickenham Park would appear to be a good location for the initial course. It has 12 rooms (with double occupancy, holds 24 people), staffed kitchen for 3 meals/day, and is within short distance of Kingston. Buses can be chartered for trips to the Bodles Experiment Station or other appropriate locale(s) associated with practical field demonstrations.

Primary trainers should be housed at the Twickenham Park Training Center to facilitate maximum student-trainer interaction. For example, 3 primary trainers at Twickenham Park would still allow 21 trainees to participate. Local trainers, living in and around Kingston, would have an easy commute to give special lectures and demonstrations.

Course Outline

Appendices A & B contain modularized course outlines, primary course itinerary, an estimated budget and suggested trainers for each training module.

Long Term Training in Jamaica

Jamaican agriculturists can best benefit from specialized training in IPM and Pesticide Management only if the training process is incorporated within a Jamaican agricultural institution. The initial training course will serve to provide broad-spectrum conceptual and practical exercises; however, the need will soon exist to tailor training to specific needs and offer such training "on-demand".

The technical expertise and interests found at the Caribbean Agricultural Research and Development Institute (CARDI, UWI Campus, Mona) would appear to make CARDI a prime candidate to be the training institution in Jamaica. Joe Suah, CARDI's Head in Jamaica, has expressed an explicit interest in CARDI undertaking such a venture.

However, such training at CARDI must have the blessing of Jamaica's own national agricultural organization (Ministry of Agriculture) if it is to be successful over the long term.

It is strongly suggested that USAID/Jamaica explore funding a contract with CARDI to establish tailor-made, "on-demand" training in IPM and Pesticide Management. The initial training course will provide a broad array of training materials, exercises and approaches. These will serve as bases for CARDI to begin the tailoring process. Any USAID/Jamaica contract with CARDI for training should give careful thought to adding costs for up to one person-month (plus travel and per diem) for foreign technical assistance and backstopping. This will allow CARDI to tap international training materials already developed and ready for various of the tailored categories recognized. One possible source for these materials is AID Washington's centrally funded project COD/AN-85-003. After the initial course and ca. two years of development of training materials with foreign technical assistance, CARDI will be in excellent shape to serve both AID and Jamaican agriculture for many years.

Many training institutions are moving to a self-paced curriculum of individualized study which places the student at the center of the education process. Students can come to a central facility, use well-designed, modularized printed or Computer Aided Instructional (CAI) materials and learn at their own pace. Built-in exams provide measures of student comprehension. If such a teaching approach is coupled with practical field exercises, the student has no problem relating "concept" to "practice" and, in fact, learns more at a quicker pace. Tailored, "on-demand" courseware might best be approached in this fashion. Many worldwide institutions have developed these type materials, and CARDI should explore using a similar approach.

The University of West Indies Long Distance Teaching Experiment (UWIDITE) represents an experiment whereby Jamaica is linked to Barbados by satellite and to Dominica, Trinidad and St. Lucia by radio. All 5 islands can share two-way communication, and courses have been offered from one island to the other. Students can ask questions during lectures. Such a linkage offers the possibility for CARDI to develop training expertise in IPM and Pesticide Management for both Jamaica and a large part of the Caribbean Region.

Trainers

The course outline (see Appendices A & B) demands the following expertise (1-3 are principal trainers; 4-6 are special lecturers):

1. Integrated Pest Management -- suggest a Ph.D. trained in relevant pest discipline(s), knowledgeable of Jamaican agricultural problems and capable of teaching concepts and practicalities of IPM, Economic Thresholds and Sampling.

2. Pesticides -- suggest a Ph.D. trained in relevant pest discipline(s), thoroughly knowledgeable of all aspects of pesticides, and preferably one who has served both as a teacher and a pesticide coordinator for some reputable institution. Past experience in the pesticide certification process is mandatory.

3. Farming Systems -- suggest a Ph.D. trained in anthropology or relevant social science discipline, experienced in the Caribbean (Jamaica specifically if possible) and thoroughly knowledgeable about farming systems methodology. Formal training and experience in agriculture are mandatory.

4. Jamaican -- someone knowledgeable about laws governing Jamaican pesticide registration, certification of applicators in Jamaica, etc. Suggest Lester Woolery, Pesticides Advisory Commission.

5. Jamaican -- someone who has broad-spectrum knowledgeable on the general types of farms and pest control methods used in Jamaica, as well as primary sources Jamaican farmers use for pest control information. Suggest Joe Suah, CARDI.

6. Jamaican -- someone who is knowledgeable about agromedical issues in Jamaica and proposed solutions. Suggest Florence Young, President, JAMA.

One possible way to identify the best personnel for 1-3 above would be for AID/Jamaica to work with AID Washington's Centrally-Funded Project (COD/AN-85-003) which has at its disposal a wide range of expertise and already developed training materials in IPM and Pesticide Management. Experts 4-6 should come from Jamaica, and they will add credence to the course. These 6 trainers could do an excellent job in the course outlined in Appendices A & B. CAUTION: Expertise is one thing -- teaching ability is another. The most effective course can occur ONLY if these 6 people are experts and good teachers. Students will gain little if trainers do not know how to teach.

Existing Training Materials

Literally hundreds of specialized and/or general training materials in IPM and Pesticide Management have been developed. The Guides and Manuals for Pesticide Applicator Training: January 1979 - August 1985 (USDA/EPA Bibliographies & Literature of Agriculture Number 47) lists 1,548 handbooks, manuals, pamphlets, etc. on virtually every aspect of Pesticide Applicator Training: Note should be taken, however, that many of these materials may not lend themselves to incorporation into a structured course.

The University of Florida (Department of Entomology & Nematology, Gainesville), in concert with the Pan American School of Agriculture (Honduras), has developed a series of multi-lingual slide/text and CAI (for IBM/XT) modules, including:

1. What is IPM
2. Concepts and Methods of Sampling
3. Development of Economic Injury Levels & Thresholds
4. Key to Orders of Insects
5. Pesticides
   a. pesticide laws
   b. the pesticide label
   c. pesticide formulations
   d. pesticide application equipment
   e. sprayer mechanics
   f. pesticide applicator safety
   g. pesticide names

Each module comes with built-in glossary to assist student in terminology and with pre- and post-testing for student evaluation (via response-judging).

The International Rice Research Institute (Los Banos, The Philippines) has developed some of the most modern self-paced modules anywhere. They, however, tend to draw mostly on rice examples. Despite this, careful study should be made of what is available at IRRI -- especially for any CARDI contract on training.

The USAID-funded Consortium for International Crop Protection has developed a broad array of training materials with its member institutions and has experience in holding training sessions in the Caribbean. Among its materials is A Training Program for Pesticide Users (Granovsky, T.A., H.N. Howell, Jr., C.L. Heep, and J.I. Grieshop 1985). This is a well constructed course and has manuals for trainers which provide topical outlines, materials needed, exercises to conduct and test questions.

Suggestions:

1. that USAID/Jamaica fund the budget (Appendix A), or some relevant sub-set thereof, and hold a training course as soon as possible into the budget year,

2. that the USAID/Jamaica Project Director(s) for Projects 532-0128 and 532-0101 be the stimulators for organizing the committee which will select the initial course participants,

3. that the committee in (2) obtain approval from appropriate Jamaican officials to insure that students emerging from training course be recognized as being certified in Jamaica,

4. that USAID/Jamaica fund a special contract with CARDI which will focus CARDI as the site for specialized training in IPM and Pesticide Management in Jamaica,

5. that USAID/Jamaica insist that all its grantees/contractees from the aforementioned two projects identify persons needing training and certification in IPM and pesticide management and that each contract call for said persons obtaining that training at CARDI,

6. that all persons successfully completing the initial (and future) training be awarded certificates stating their name, training site & date, and certification status, and

7. that USAID/Jamaica allow any training contract with CARDI to include dollars for foreign technical assistance & backstopping -- at least initially.

APPENDIX A[1/]

OUTLINE FOR INAUGURAL TRAINING IN IPM AND PESTICIDE MANAGEMENT

Friday

All 6 trainers arrive at Twickenham Park Training Center (TPTC) and assemble all course materials. Discussion on course logistics, testing, and field trip.

Saturday

Continue as on Friday

Sunday

All trainees arrive at TPTC. Registration. Hand out all name tags and course materials.

Monday

7:00 - 8:00 am	Breakfast
8:00 - 8:30 am	Course Introduction (outline of course objectives, review of training materials, preview of testing)
8:30 - 10:00 am	MODULE 1: Farming Systems
10:00 - 11:30 am	MODULE 2: Integrated Pest Management
11:30 - 12:00 noon	Discussion
12:00 - 1:30 pm	Lunch
1:30 - 2:30 pm	MODULE 3: Agromedical Concerns in Jamaica
2:30 - 3:00 pm	Discussion
3:00 - 6:00 pm	Study Time
6:00 - 7:30 pm	Dinner
7:30 - 10:30 pm	Self-Paced Study; Discussion with Trainers

Tuesday

7:00 - 8:00 am	Breakfast
8:00 - 9:00 am	Test over Monday's materials
9:00 - 10:30 am	MODULE 4: State of Pest Control in Jamaica
10:30 - 11:00 am	Discussion
11:00 - 12:00 noon	MODULE 5: Pesticide Laws & Certification Procedures in Jamaica
12:00 - 1:30 pm	Lunch
1:30 - 3:00 pm	MODULE 6: Sampling
3:00 - 4:30 pm	MODULE 7: Economic Injury Levels & Thresholds
4:30 - 5:00 pm	Discussion
5:00 - 7:30 pm	Study Time/Dinner
7:30 - 10:30 pm	Self-Paced Study; Discussions with Trainers

1/ See Appendix B for outline and objectives by MODULE. This course outline is designed to optimize trainer-student interaction and use self-paced study reinforcement of all topics.

Wednesday

7:00 - 8:00 am	Breakfast
8:00 - 9:00 am	Test over Tuesday's materials
9:00 - 10:00 am	MODULE 8: The Pesticide Label
10:00 - 11:30 am	MODULE 9: Pesticide Naming and Formulations
11:30 - 12:00 noon	Discussion
12:00 - 1:30 pm	Lunch
1:30 - 3:00 pm	MODULE 10: Pesticides and Their Effects on People
3:00 - 3:30 pm	Discussion
3:30 - 5:00 noon	MODULE 11: Pesticide Application Equipment
5:00 - 7:30 pm	Study Time/Dinner
7:30 - 10:30	Self-Paced Study Discussion

Thursday

7:00 - 8:00 am	Breakfast
8:00 - 9:00 am	Test over Wednesday's materials
9:00 - 11:00 am	MODULE 12: Calibration of Spray Equipment
11:00 - 11:30 am	Discussion
11:30 - 1:30 pm	Free Time/Lunch
1:30 - 3:30 pm	MODULE 13: Pesticide Applicator Safety
3:30 - 4:00 pm	Discussion
4:00 - 7:30 pm	Study Time/Dinner
7:30 - 10:30 pm	Self-Paced Study; Discussions with Trainers

Friday

7:00 - 8:00 am	Breakfast
8:00 - 9:00 am	Test over Wednesday's materials
9:00 - 11:00 am	MODULE 14: Pesticide Storage and Disposal
11:00 - 11:30 am	Discussion
11:30 - 1:30 pm	Free Time/Lunch
1:30 - 3:00 pm	MODULE 15: Pesticide Clean-Up of Spills
3:00 - 3:30 pm	Discussion
3:30 - 7:30 pm	Study Time/Dinner
7:30 - 10:30 pm	Self-Paced Study; Discussions with Trainers

Saturday

6:30 - 7:30 am	Breakfast
7:30 - 8:30 am	Travel to Bodles Experiment Station (or other appropriate location)
8:30 - 12:00 noon	Field Demonstrations
12:00 - 1:30 pm	Lunch (box lunch prepared at TPTC and brought to field)
1:30 - 4:00 pm	Field Demonstration
4:00 - 5:00 pm	Travel to TPTC
5:00 - on	Free Time and Dinner

Sunday

Free Time/Self-Paced Study/Discussions with Trainers

Monday

7:00 - 8:00 am	Breakfast
8:00 - 9:00 am	Test over field Trip
9:00 - 11:00 am	MODULE 16: Antidotes/First Aid
11:00 - 11:30 am	Discussion
11:30 - 1:30 pm	Lunch
1:30 - 2:00 pm	Course Summary
2:00 - 3:00 pm	Student Evaluations of Course
3:00 - 4:00 pm	Awarding of Certification Certificates
4:00	Course Dismissed

ESTIMATED BUDGET FOR INAUGURAL TRAINING COURSE IN IPM AND PESTICIDE MANAGEMENT

ITEM	ESTIMATED COST ($US)
Room/Board at Twickenham Center[a/] (6 persons/$15 ea./2 nights).....	180
Room/Board at Twickenham Center[b] (21 persons/$15 ea./8 nights).....	2,520
One person-month of preparation[c] and overseas training $200/day X 30 days + contractee's overhead of 20%)..	7,200
Per Diem for Overseas Trainers (3 people X $ 25/day X 11 days).....	825
Airfare for Overseas Trainers.....	3,000
Preparation & Duplication of Course Materials	2,000
Local Arrangements Coordinator[d].....	0
Supplies for Course[e].....	500
Computer Rental (IBM/XT)[f] (3 computers @ $60 ea per day X 4 days)..	720
Bus Charter + Driver for Field Trip.....	175
TOTAL ESTIMATED COSTS...	16,445

a/ foreign trainers pay own room & Board from AID per diem (Training Center must be reserved 1.0 to 1.5 months in advance)

b figured on 21 for same reason as in footnote a

c suggest working with AID Washington's Project COD/AN-85-003 for identification of 3 foreign trainers; in any case, preparation time will be demanded prior to course

d assumes AID/Jamaica will use present staff member in this capacity

e example pesticides, student certificates, paper, pencils, pesticide mixing containers

f optional item, depending upon who the trainers turn out to be (some may not have computer aided instructional courseware to utilize)

APPENDIX B1/

MODULARIZED OUTLINES FOR INAUGURAL TRAINING COURSE

MODULE 1: Farming Systems

Trainer: The Foreign Anthropologist

Objective(s): TO:

(1) expose students to methods of rapid rural appraisal for determination of farmer IPM practices and pesticide use patterns

Topical Outline:

I. What is farming systems
II. Rapid Rural Appraisal
   A. definition
   B. methods
   C. expected results/analyses
   D. an example

MODULE 2: Integrated Pest Management

Trainer: The Foreign IPM Specialist

Objective(s): TO:

(1) teach the principles underlying IPM
(2) exemplify major tactics & strategies used in IPM
(3) exemplify the steps involved in building any IPM program

Topical Outline:

I. Principles underlying integrated pest management
II. Tactics and Strategies of IPM
   A. biological control
   B. chemical control
   C. physical control
   D. host plant resistance
   E. legislative control
   F. genetic control
   G. cultural control
III. Stepwise development of an IPM program

1/ additional readings, exercises and/or computer aided instructional materials available in central location in the nightly self-paced study period to support daily modules

MODULE 3: Agromedical Concerns in Jamaica

Trainer: Jamaican (suggest Florence Young)

Objective(s): TO:

(1) list the major medical problems caused by pesticide use in Jamaica and the chronic/long term effects
(2) describe how human toxicities are monitored in Jamaica
(3) outline proposed steps for alleviating human toxicity problems

Topical Outline:

I. Major problems in Jamaicans from pesticide use
   A. chronic
   B. long term
II. Monitoring of human pesticide poisoning in Jamaica
   A. who monitors
   B. data collected & analyses conducted
   D. any results of analyses to date
III. Alleviating pesticide use problems in Jamaicans

MODULE 4: State of Pest Control in Jamaica

Trainer: Jamaican (suggest Joe Suah)

Objective(s): TO:

(1) relate major tactics and strategies used by Jamaican agriculturists in pest control
(2) identify sources of farmer information about pest control

Topical Outline:

I. Types of farming systems in Jamaica
   A. % corporate
   B. % small farm (or subsistence)
II. Methods used for pest control in Jamaica/examples
   A. biological
   B. cultural
   C. chemical
   D. cultural
   E. other
III. From whom do farmers get their advice about pest control

MODULE 5: Pesticide Laws and Certification of Applicators in Jamaica

Trainer: Jamaican (suggest Lester Woolery)

Objective(s): TO:

(1) specify Jamaican laws for registering pesticides and pesticide applicators

Topical Outline:

(to be decided)

MODULE 6: Sampling

Trainer: The Foreign IPM Specialist

Objective(s): TO:

(1) identify the fundamental steps in setting up any sampling program in support of IPM or monitoring of pesticide effectiveness

Topical Outline:

I. Why sample
   A. measuring
   B. decision-making
II. Ingredients in any sampling plan
   A. pest dispersion patterns
      1. random
      2. uniform
      3. clumped
   B. sample allocation plan
      1. simple random
      2. stratified random
      3. systematic
      4. "haphazard"
   C. sample unit size (choosing a tool)
   D. numbers of samples to take
      1. sample precision
      2. relevance to the economic threshold as a decision-maker

MODULE 7. Economic Injury Levels and Thresholds

Trainer: The Foreign IPM Specialist

Objective(s): TO:

(1) instruct on the importance of EIL/ET values in IPM
(2) exemplify 7 basic steps in constructing EIL/ET values

Topical Outline:

I. Why need EIL's and ET's
   A. making control decisions
   B. balancing the attack against pests
   C. economics
II. Some basic steps
   A. how the crop grows
   B. which "pests" are present
   C. which are really pests
   D. determining the density-damage relationships
   E. setting the EIL
   F. setting the ET
   G. assisting farmers

MODULE 8: The Pesticide Label

Trainer: The Foreign Pesticides Specialist

Objective(s): TO:

(1) teach students how to read and comprehend any pesticide label

Topical Outline:

I. Why are labels important
II. Parts of a label
III. How to use a label

MODULE 9: Pesticide Naming and Formulations

Trainer: The foreign Pesticides Specialist

Objective(s): TO:

(1) discuss and show various pesticide formulations & how they are named

Topical Outline:

I. What does formulation mean
II. Active and inert ingredients
III. Types of formulations
  A. liquid formulations
    1. aerosols
    2. emulsifiable concentrates
    3. flowables
    4. liquid gases
  B. dry formulations
    1. baits
    2. dusts
    3. granules
    4. soluble powders
    5. wettable powders
IV. Characteristics and Inherent dangers in different formulations

MODULE 10: Pesticides and Their Effects on People

Trainer: The Foreign Pesticides Specialist

Objective(s): TO:

(1) teach the dangers of symptoms of human pesticide poisonings

Topical Outline:

I. The danger of pesticides
II. How poisoning occurs
III. Signs and symptoms

MODULE 11: Pesticide Application Equipment

Trainer: The Foreign Pesticides Specialist

Objective(s): TO:

(1) show and discuss various types of pesticide application and relate each to the pesticide's formulation
(2) highlight pro's and con's of each type application equipment

Topical Outline:

I. Briefly review types of formulations
II. Types of application equipment
   A. back-pack sprayers
   B. high-boy tractors
   C. airplanes
   D. helicopters
   E. boom tractor sprayers
   F. several others
III. Pro's and Con's of each applicator for various formulations

MODULE 12: Calibration of Spray Equipment

Trainer: The Foreign Pesticides Specialist

Objective(s): TO:

(1) teach the proper method of calibration of each types of equipment discussed in MODULE 11

Topical Outline:

I. Why is calibration important
II. Distance = (rate) x (time): simple, but often not remembered
III. Calculation of the amount of pesticide
IV. Clean-up, maintenance and repair of application equipment

MODULE 13: Pesticide Applicator Safety

Trainer: The Foreign Pesticides Specialist

Objective(s): TO:

(1) instruct on the safest possible way to protect pesticide applicators during the mixing and spraying of pesticides

Topical Outline:

I. The importance of safety during mixing and application
II. Clothing and safety equipment
III. Before you get started

MODULE 14: Pesticide Storage & Disposal

Trainer: The Foreign Pesticides Specialist

Objective(s): TO:

(1) teach proper storage and disposal techniques for pesticides

Topical Outline:

I. Why is proper storage so important
II. Proper storage procedures
    A. where pesticides should be stored
    B. how pesticides should be stored
    C. criteria for a storage location
III. Disposal of pesticide containers
    A. the need for disposal
    B. disposal of surplus pesticides
    C. proper disposal of containers
        1. those that will burn
        2. those that will not burn
        3. those that have mercury, lead, cadmium, arsenic or inorganic pesticides
IV. Trouble shooting
    A. potential problems
    B. fires
    C. leaks
    D. floods

MODULE 15: Clean-up of Pesticide Spills

Trainer: The Foreign Pesticides Specialist

Objective(s): TO:

(1) teach the safe steps in clean-up of any particular pesticide spill

Topical Outline:

I. Dry spills
II. Wet spills
III. What to do
IV. Safety equipment needed for each type spill
V. Preventing accidents

MODULE 16: Antidotes and First Aid

Trainer: The Foreign Pesticides Specialist

Objective(s): TO:

(1) teach the proper recognition of pesticide poisoning symptoms and associated antidotes and first aid measures

Topical Outline:

I. General, immediate steps to take for all pesticide poisonings
   A. stop contact with pesticide; move victim away; wash off skin & eyes
   B. if possible, notify a doctor, hospital or clinic
   C. read label of pesticide involved for statement of treatment
   D. save pesticide container for doctor; at least save sample of any material vomited
II. Pesticide on the skin
   A. what NOT to do
   B. what to do
IV. Poison breathed through the nose and mouth
   A. what NOT to do
   B. what to do
V. Use of respiratory equipment
VI. Poison in the eyes
   A. what NOT to do
   B. what to do

THE FIELD TRIP:

Trainers: All 3 Foreign Specialists

Objective(s): TO:

(1) demonstrate the concepts and techniques taught in the course

The following will be demonstrated:

1. sampling techniques, counting and keeping of field records
2. pesticide mixing in back-pack sprayer
3. pesticide calibration
4. pesticide application
5. census of pest mortality from application
6. mock poisoning exercise of someone present

SOCIAL SOUNDNESS ANALYSIS OF THE AGRICULTURAL RESEARCH PROJECT

1. INTRODUCTION

PURPOSE

The purpose of this paper is to establish the extent to which farmers and farmers' organizations are likely to participate in the proposed agricultural research project. This analysis will identify possible obstacles to the project's success and make recommendations for strategies to overcome these. The Agricultural Research Project is intended to provide a "focused and vigorous technology generation/adaptive research mechanism" which would stimulate the development of the agricultural sector of Jamaica.

More specifically, the social analysis addresses the following issues identified:

1. Provide a social inventory and analysis of farmers of various size operations in Jamaica.

2. Analysis of how research is likely to affect different social groupings of farmers in terms of participation, adoption and benefits to be derived.

3. Describe farmers' attitudes towards participation in field trials to inform the design of the project and to identify obstacles to participation.

4. Examine farmers' organizations and the conditions under which they would participate in research work.

5. Examine the feasibility of self-replicating on farm trials.

6. Identify the most pressing problems of farmers that can be addressed by commodity specific agricultural research.

7. Identify how on-going research can be focused on the most pressing problems of farmers.

8. Determine the possible effects of praedial larceny upon the results of research experiments.

BACKGROUND TO FARMING SECTOR

Types and History of Farming System

In the early period of agricultural development, Jamaica had two major types of farming - subsistence farming and plantation type farming. During slavery, slaves were permitted to cultivate on back lands to supplement the food provided by the plantation. Later, after emancipation, ex-slaves squatted on these lands or were allocated small plots in the up-lands under the village development programmes operated by the churches, and practiced subsistence farming while selling their labour to large estates for cash income.

Their farming techniques were rudimentary consisting of shifting cultivation and "slash and burn" agriculture. Naturally, this resulted in soil erosion, depletion of soil nutrients, low yields and general in-efficiency of the land and inputs utilized.

Attention to the development of improved farming practices accompanied the major land reform programmes of the 1940's, which came about after the social upheavals of the late 1930's. Major land settlement schemes afforded marginalized rural Jamaicans an opportunity to make a living from agriculture and provided alternatives to estate employment. Co-ordinated welfare and extension programmes, addressed the social development needs as well as farming technology and soil conservation. This era marked the introduction of a level of commercial farming on small farms so that today most small farmers sell a substantial portion of their production in domestic markets as well as contribute significantly to the export market for traditional commodities, e.g., sugar, bananas, and coffee.

The predominant mode of farming continues to be mixed farming system which includes a number of short term cash crops intercropped on various portions of the holding. The production system is geared towards providing the farmer with some income throughout the year and is a rational response to climatic conditions, market conditions as well as the land capability as perceived by the farmer. The use of modern technology varies with the farmers' ability to afford inputs such as proper planting material, fertilizer and spray. This is inturn related to the availability of credit.

In recent years (1982 - 1986) in response to government incentives, a number of specialist farms have developed using fairly sophisticated technology. These farms, although relatively small in size are operated by farmers of high educational level with access to credit and inputs and are geared towards the export market for floriculture, yams etc.

The main intermediaries for the domestic market are "higglers" who collect, pack and transport products from the farms to the several market towns throughout the island. Small farmers tend to be very dependent on higglers and rarely engage in such activities as transporting, grading and sorting or storing their own crops. Larger sized farmers tend to engage slightly more in these activities, particularly grading and sorting.

Land Forms

Jamaica enjoys a favourable location in relation to the total land mass of the Americas, Western Europe and much of the North and West Africa in that it lies within a 6,000 mile radius of these countries. The island has contrasting physiography and land use patterns. Much of the land is comprised of rugged terrain with almost one half of the land mass rising over 1,000 feet above sea level.[1]

1. National Atlas of Jamaica, Town Planning Department and United Nations Special Fund Project.

The three main types of land forms of the island are:

- interior mountain ranges;
- dissected limestone plateaux and hills; and
- the coastal plains and interior valleys.

The interior mountain ranges are heavily dissected by deep valleys and steep hillsides, which are highly vulnerable to indiscriminate deforestation which accelerates soil erosion. The dissected limestone plateaux and hills are the main dominate of the small farmers as traditionally, these areas had proved unsuitable for plantation type agriculture and were made available to ex-slaves for village settlement. The elevation of these plateaux range from near sea level to more than 3,000 feet above sea level. The plateaux surfaces are heavily dissected with slopes which dominate the upland areas near the coast.

The coastal plains, located along the north and south coast, are the lands best suited for intensive agricultural use. The soils in these areas have been deposited by rivers and are composed of loam, sand and gravel and are therefore the most suitable for productive agricultural activities. However, rainfall in these areas is less than adequate for intensive production and with insufficient irrigation the lack of water has been a major constraint to agricultural development.

One of Jamaica's major environmental problems is soil erosion throughout the highlands. After an intensive rain, the rivers carry valuable top soil from the hillsides to the sea. Erosion is the result of several factors: steep-sided hillsides, high rainfall, fast flowing rivers and historically poor agricultural practices on the uplands causing severe deforestation. Various conservation measures including afforestation and improved cultivation techniques through projects like the Integrated Rural Development Project have been introduced, to stop erosion and rehabilitate the land ,with mixed results.

Vegetation

Jamaica has a wide range of climatic conditions as a result of its irregular, mountainous landscape, the influence of the northeast trade winds and its situation between the sub-tropical high pressure and equatorial low pressure belts of the Atlantic. The natural vegetation pattern is largely associated with the temporal and spatial distribution of rainfall. Much of the forest are found on the high rainfall windward slopes of the mountains and exuberant vegetation are prevalent on the northern coastal plains. Leeward slopes, however, receive much less rainfall and vegetation formations common to semi-dry ecosystems prevail. Dry deciduous forest and second growth shrub are common on hill slopes whereas natural or introduced pasture covers most of the limestone plateaux. Savanna-type of vegetation characterizes the southern coastal plains and swamp and marsh forest are found in areas adjacent to these plains.

Farm Size and Land Ownership

Of the total area of the country, agricultural lands occupied approximately 46% in 1979, a decline from 55% in 1970. The 1980 survey of farms carried out by the Ministry of Agriculture, Data Bank and Evaluation Division showed that 78% of the farmers were using 30% of the land and these farms are below three acres. A total of 160,082 farmers occupy 923845.9 acres of land which is broken down as follows:

Table 1.

FARM LAND DISTRIBUTION IN JAMAICA

Farm Sizes	Farmers	% of Farmers
Landless	4,768	2.98
Less than 1/2 acre	22,227	13.88
1/2 to less than 1 acre	18,459	11.53
1 to less than 2 acres	31,694	19.80
2 to less than 3 acres	22,932	14.33
3 to less than 5 acres	24,705	15.43
5 to less than 10 acres	22,595	14.12
10 to less than 25 acres	9,837	6.14
25 to less than 50 acres	1,774	1.11
50 to less than 100 acres	591	0.37

Farm Sizes	Farmers	% of Farmers
Greater than 100 acres	500	0.31

Source: Ministry of Agriculture Data Bank and Evaluation Division - Farmer's Register, 1980

From these statistics it can be concluded that the large number of small farms which exist, particularly in the inland areas, contrasts with the small number and large acreages of the estates. The data also indicate that there are landless farmers which total 4,768 and account for 2.98% of the total number of farmers.

Besides the sizes of farms, the land ownership pattern merits mention. The majority of land in small farms is owned by the occupant, although some farmers also rent or lease land. The Agricultural Survey, 1980 shows 70% of farms of all sizes were owned, while 24% were rented and 6% were leased for over 10 years. Although the preferred form of tenure is sole ownership, which offers security and status to the farmer, a considerable number of holdings are owned jointly by all members of the family, who have the right to claim any products of that land and also to erect structures if they choose so to do.

Fragmentation is another feature of small farming. A farmer may operate up to four parcels of land. The Agricultural Survey, 1980 confirms that 100% of small farmers surveyed indicated that their farm enterprises were fragmented. The degree of fragmentation makes it difficult for farmers to efficiently manage their farms.

A small farmers holding is therefore comprised of several parcels of land, under a variety of tenurial forms, and generally at some distance from the homestead. The complexities of farm size and land ownership seriously impact on the productivity of the farming sector. For example:

1. Land tenure is a determining factor in the selection of long term investment alternative. The renting farmer is unlikely to invest in soil conservation measures and long term crops due to the fear that he will be unable to benefit from his investment.

2. Rented land is generally the least productive land and exhibits other constraints such as poor access or heavily eroded soil.

3. Operating several plots tends to be a risk management strategy against the high degree of variability in the soil types in Jamaica.

   Each plot will have the capability to produce different crops at different time of the year. The farmer will also acquire land as it becomes available since there is a high demand for this scarce resource.

DOMESTIC vs. EXPORT PRODUCTION

In 1979, export crops occupied 45% of the total agricultural land whereas domestic and mixed crops accounted for about 21% and 9% of the total land, respectively. The following table shows the national statistics.

Table 2.

RELATIONSHIP OF LAND USE AND ACREAGES

Land Use	Acres
Domestic Crops	266,204
Livestock and Poultry	307,150
Export Crops	567,018
Mixed Crops	106,400
Agricultural Area	1,246,772
Total Area	2,715,829

Sources: Census of Agriculture 1968 - 1980 Department of Statistics

Over the years the basic export crops have been sugar, bananas, citrus, pimento, cocoa, coffee, ginger and root crops. Whilst much of this production has been from large estates, it is estimated that more than three quarters of all the coffee, cocoa and bananas that enter the export market are produced by small farmers.

ISSUES RELATED TO AGRICULTURAL RESEARCH

Over the years, successive governments and organisations have shown continued interest in the welfare of farmers in Jamaica. Studies have been carried out in several areas of farming ranging from demographic to social and attitudinal aspects of national production goals and targets. Studies on agricultural research and research projects per se have been the subject of much discussion and concern. Both local and international agencies support research activities as one of the tools to greater productivity.

However, the inherent problems associated with research work over the years in aiming for development stimulated the idea of a National Institute for agricultural research.

In view of the role that agriculture is expected to play in the economic recovery of Jamaica, it is evident that the current status of productive technology must be addressed. Low production and low productivity have been identified with the production technologies being employed. This has been directly linked to "inadequate research efforts which are underfunded, poorly co-ordinated and administered, and weakly linked to extension".

A brief exposition of research work done in the past shows that investigations done by the Research and Development Division of the Ministry of Agriculture was limited in scope as traditionally it was oriented towards the improvement in production of basic staple food for local consumption.[2] There was very little emphasis on import substitution crops. In addition, research for export crops such as sugar cane, bananas, coffee or cocoa was done mainly by statutory bodies outside the Ministry of Agriculture. This has resulted in fragmented efforts at research, focus not properly prioritised and lack of co-ordination.

2 Evaluation Report, Cropping System Research (Jamaica) Project, November 1984 - October 1985). Ministry of Agriculture, Hope Gardens.

A further point of concern as far as research work is concerned is the diffusion of knowledge. The majority of domestic food producers in Jamaica, mainly small farmers operate within complex mixed farming systems, and in the face of many constraints using rudimentary tools and traditional practices. Farmers use a number of strategies to optimize production in the face of:

1. risk	-	of damage from pests, climatic conditions, livestock, thieves
2. delivery system	-	failure to provide affordable in-puts.
3. scarcity	-	of land, labour

Among these risk management strategies are the selection of a multi-crop mix and sequential planting seasons to ensure harvesting can take place throughout the year to provide income. Farmers also use sprays and fertilizers improperly to "stretch" the contents of boxes or bottles to ensure that "they get the most for their money". Farmers are also reluctant to change this approach because of the uncertainty of the results and impact on income.

Most of the technology generated from research has been on research stations, with little adaptive research being done on farmers' holdings under conditions similar to the small farmer's reality. The extension approach used in the dissemination of results generated on research stations, has not been effective in influencing the practices of small farmers. The unidisciplinary mono-crop approach to research has been unable to effectively address the complex interaction of problems within the existing multicropping system.

SOCIAL INVENTORY OF FARMERS

The most recent figures state that 236,900 persons are employed in agricultural production in Jamaica and there are 160,082 farmers.

Table 1 on page 6 illustrates the distribution of farms by size indicate that Jamaica's domestic agricultural production is dominated by small farmers with farms of less than 5 acres in size. In 1970, 69% of all farms were less than 5 acres; in 1980, 75% fell in this category. This suggests that the number of small farmers is growing.

The social characteristics of this group are well documented and fairly consistent generalisations can be made. The variations from parish to parish are not significant as the historical determinants and cultural realities are the same throughout this small island. In addition, the level of technology applied in all parishes is fairly similar despite varying climatic conditions. St. Elizabeth is outstanding as a high producing area with a unique dry-farming system and some differences in social composition, geography and climate. Here, farmers, predominantly of European origin settled as sheep farmers using the flat lands to grow grass for their animals. The mixed farming system which eventually emerged benefitted from the pattern of grass production which was used to mulch crops during the long dry season.

DEFINING THE SMALL FARMERS IN JAMAICA

David Edwards in his significant Economic Study of Small Farming in Jamaica (UWI 1961) gives the following characteristics of small farmers by comparison to large farmers.

1. The small farmers rely on family labour while the large farmers use large quantities of hired labour

2. Most of the small farms are to be found on hillside land where the soils of moderate natural fertility have been badly eroded.

3. Little experimental work has been undertaken on crops produced for local consumption,which form an important part of small farm output and an unimportant part of large farm output. The large farmer is also favoured by his greater formal education and social contacts which make it easier for him than for the small farmer to obtain and use what information is available.

4. The managerial function on a large farm is discharged by a man or men who are engaged exclusively in this activity while the small farmer manages his on his farm in conjunction with and in employment outside.

5. The goals of the large farmer are very different from those of the small farmer. The small farmer is preoccupied with the consumption needs of his household and the need to provide for himself and his family in later years.

6. The small farms produce a large number of products; some are exported, but the others constitute most of the food locally produced for consumption in Jamaica.

7. Hand tool methods rather than mechanized cultivation are typical of the small farms.

Rutty Mitchell in (Social Forces Affecting Farmer Decisions) Assessment of Hillside Agriculture in Two Watersheds of Jamaica suggests that within the large group of small farmers with similar characteristics i.e. multi cropping, multi-parcelling, traditional tools, low productivity, there is an observed horizontal stratification based on:

1. Land use and cropping outlook

2. Attitude to change

3. Commitment to Farm Improvement and Production

4. Motivation Stimili

The first group of farmers is amenable to utilize advice and to change cropping patterns in order to obtain increased production and income. The second group has not yet made efforts to improve but exhibit willingness, while the 'traditional adamant farmers' comprise the third group who are considered impervious to stimili.

What is clear from these and other studies is that the Jamaican small farmer has operated for a long time under severe constraints, however there is evidence of readiness for change which will break the "vicious circle in which his income is too low to provide them with the margin seeded for savings and investment in the absence of which his production and income remain at a recurrently low level". (The Small Farmer in Jamaican Agriculture: An Assessment of Constraints and Opportunities. USAID p. 57).

SOCIAL CHARACTERISTICS

Age and Sex

It is estimated that the majority of small farmers are over 50 years old. Carloni found that in the Watershed Areas outside of Kingston, 52% of farmers were over the age of 50. The national average is given to be 55 years. While there is a predominance of males in Agriculture (41.4% employed in agriculture), women also play an important role. (19.4%) Women assist with planting and weeding and bear the responsibility for reaping and marketing. They tend the livestock and draw water. Women also manage the cash obtained from sale of goods and purchase the family requirements. A number of women, who are household heads, bear the full responsibility for farming. Female household heads account for 30% of households nationally, however the rural situation has been found to be slightly lower. Carloni found 24% in the Watershed Survey (1984). In the Uplands Survey (1978), Gardner found 25% - 20% of households headed by women.

FAMILY COMPOSITION AND SIZE

Family size and composition among the farming population is typically large (over five persons) and extended (comprised of relatives as well as offspring). The form of the union is either legal or common-law, with a few situations where the male is in a visiting relationship. This latter however is not typical of rural farm families, but is common in urban areas. Children in the farm household are generally expected to assist with the production enterprise. The male children, on reaching adulthood, play an active role in the farm enterprise where the possibility of permanent occupation and land ownership exists. In many cases, the young farmer cannot get access to his own plot of land and does not inherit control of the family's farm until his father either dies or is too old to farm. Migration of the 18-25 year olds is significant as young males (and females) must find off-farm employment in the nearby towns and cities to sustain themselves. Young

females exhibit a high rate of unemployment as there is no role for them in the farm household, except assisting with female tasks of weeding and reaping or caring for younger children. (Overall female unemployment in agriculture is three times as much as males).

Most studies indicate that farms experience shortage of family labour as young people are reluctant to commit themselves to full-time farming without adequate compensation or hope of inheritance and control of the enterprise. Another view is that the more ambitious parents prefer their children to move out of farming to higher status employment and so do not encourage their involvement in the farm. Both situations are likely to be found in Jamaica.

OFF-FARM EMPLOYMENT

The majority (80-85%) of small farmers consider farming their full-time occupation. However, a significant number supplement income by off-farm work or by own account artisan operations (shoe-making, tailoring, etc.). Farmers also work on large estates during harvesting or planting season,however very few (10-15%) rural males have full-time non-farm occupations to the exclusion of farming.

INCOME

Data on farm income is difficult to find and varies considerably from survey to survey. The most recent assessment places the average income of a farm at $.

2. EXPERIENCES WITH AGRICULTURAL RESEARCH

ON-FARM TRIALS

Traditionally, agricultural research in Jamaica has focused on export oriented crops such as banana and sugar and has thus been of a more applied than adaptive nature. However, in recent times increasing attention has been placed on food crops produced for domestic consumption. For a large part, much of this research has been basic and there is currently a gap between available research data and the application of these results on farms.

The government of Jamaica recognizing the significant contribution which the small farmers (80% of the total farmers) of Jamaica make to the nation's agricultural production, continues to support research activities as one of the tools to greater productivity. This meant changing the emphasis where less time would be spent on regulatory functions and more time on promotion and research findings. Close co-operation between research and development and production can be achieved by executing field trials on farmer's plots.

Presently a number of institutions are conducting on-farm trials thoughout the island. The Ministry of Agriculture is executing several trials on large farms. The Jamaica Livestock Association is currently engaged in field trials on 60 large farms and 360 small farms. IICA has been engaged in on-farm trials to meet its objectives of: developing appropriate farming systems for terraced hillside land; developing soil conservation methods which are less costly than terraced hillside land ; and the development of intercropping systems using legumes as the intercrop. Currently IICA has filed trials on two large farms and 17 small farms. There are two large and two small farms that are presently being used by the Coffee Industry Development Company Limited. Other research organisations such as the Coconut Industry Board and Sugar Industry Research

Institute are also conducting their own research. Coconut Industry Board is currently conducting on-farm research on seven large farms and three small farms. CARDI presently has research projects being executed on three large farms and 12 small farms. With increased funding, the increasing popularity of on-farm trials among farmers, training for farmers and effective monitoring of the activities of the projects through feedback and controls to ensure guidance and motivation, it is expected that the number of on-farm trials will increase substantially.

INSTITUTIONS

Several institutions work directly with farmers in applied/adaptive research. These include:

- The Ministry of Agriculture
- The Commodity Boards and Associations which include:
  - The Sugar Industry Research Institute
  - The Coconut Industry Board
  - Coffee Board
  - The Cocoa Industry Board
- The regional institutions such as:
  - Caribbean Agricultural Research and Development Institute
  - Inter-American Institute for Co-operation in Agriculture
- The Jamaica Livestock Association

MINISTRY OF AGRICULTURE

The Ministry of Agriculture conducts research programmes through various divisions which have technical responsibility for specific areas of research. The Research

and Development Division is comprised of Crop, Livestock and Plant Protection Branches out. and in particular the Farming System Research and Extension Unit which carries out applied/adaptive research on private farms. The other divisions throughout the Ministry are mostly involved in applied research work.

Through its extension programme the Ministry of Agriculture contacts farmers who are willing to have research carried out on their farms. Depending on the nature of the research; if seeds/shoots are to be planted they are provided. All other needed inputs are provided. They monitor the trials from planting to harvesting. Farmers are also encouraged to participate and are given instructions on the techniques being used. From observations, instructions and guidance, farmers are able to utilize the practices recommended during subsequent planting periods of the crop.

THE COCONUT INDUSTRY BOARD

The Coconut Industry Board, a statutory body, was established in 1945 and was charged with promoting the interests and efficiency of, and to control the coconut industry. The Board conducts and assists research activities and experiments for the elimination or control of any coconut disease and is also responsible for the development, extension and betterment of the production of coconuts and coconut products.

As the need for growing different varieties of coconuts on different soil types increase, the Board has had to carry out trials on private farms in order to avail themselves of the varying soil types. This essentially applied research is usually done on farms with which the Board has personal contact with the farmers. In such programmes the Board usually carries out the fertilizer or spray applications. For purposes of analysis, the nuts are usually harvested before they are ready in which case they are not subject to praedial larceny. The field officers and technicians only take as many nuts as is needed for analysis. Farmers are encouraged to participate in the trials and are informed of the results

of trials. Through this system of research and development and extension, farmers become aware of the benefits of growing coconut on varying soil types and using various types and quantities of fertilizer and chemical sprays.

COFFEE INDUSTRY DEVELOPMENT COMPANY LIMITED

The Coffee Industry Development Company (CIDCO) is a subsidiary of the Coffee Industry Board with specific responsibilities for production, extension and nursery services for the coffee industry. Research work on disease and weed control, and fertilizer trials is carried out on their own farms and on private farms. In order to test chemicals in different climatic conditions, it becomes necessary to conduct trials on farms in various areas. However, trials on private farm have been limited to fertilizer evaluations.

The method of carrying out on-farm trials involves demonstration trials and training days for farmers. Farmers are then asked if they would allow similar trials on their farms. If they agree, the researcher visits the farm and instructs the farmer. Subsequent visits are made in which the farmer is suspervised in the fertilizing or spraying operations. Follow up visits are made to check the results of the operations.

COCOA INDUSTRY BOARD

The Cocoa Industry Board (CIB) is a commodity board which is charged with the responsibility for regulating and promoting the development of the industry as well as to secure arrangements for the purchase, processing and marketing of cocoa.

The Ministry of Agriculture carries out research for the CIB. With the present budgetary restrictions in the Ministry of Agriculture, the Board provides land and finance to assist the Ministry in carrying out the research. The staff of the Board however assists with the research application work through its extension programme.

CARIBBEAN AGRICULTURAL RESEARCH AND DEVELOPMENT INSTITUTE

The Caribbean Agricultural Research and Development Institute (CARDI) is an autonomous institute established by the government of the Caribbean Community. This Institute is charged with the responsibility of co-ordinating other government agencies and in carrying out research and development in agriculture for the governments of the Caribbean. In carrying out its function CARDI provides technical assistance, including analytical and biometrics services, transfer of information and training.

CARDI has been involved in conducting a lot of the adaptive research in Jamaica. Their method of getting the approval of farmers for research and adaptation involves informal discussions with farmers, explaining their aims and objectives. The farmers' opinion is considered before going any further. If CARDI decides to go ahead with the trial, farmers are given materials, fertilizer and instructions if it is for a crop trial. Chemical sprays and technical information are provided if necessary. CARDI sometimes carry out periodic checks depending on the objectives of the trial. The final product is bought from the farmer at market price plus a 50% incentive mark-up. CARDI undertakes the cost of transporting the produce by collecting the crops from the farms.

INTER-AMERICAN INSTITUTE FOR CO-OPERATION IN AGRICULTURE

The Inter-American Institute for Co-operation on Agriculture (IICA) is an international, inter-governmental organisation specializing in agricultural research and development. The institute was formed for the purpose of encouraging, promoting and supporting member countries to achieve the general development and rural well-being of its people.

In Jamaica IICA has been involved in adaptive research which involves testing a new methodology for carrying out research on farms. IICA also carried out joint programmes with the Ministry of Agriculture. One such programme was the development of appropriate farming systems for terraced hillside lands and the development of soil

conservation methods which were less costly than terraces. Present on-farm research involves a cropping system project.

IICA's method of carrying out on-farm research involves the use of the Ministry of Agriculture support staff who are sent to specified area where they ask farmers if they are interested in having their farms used for the research. They liaise with farmers, finding out what sorts of research they would like, what sorts of results they would like to see, etc. After a joint identification of problems, decisions are made as to the type of trials to be carried out. The programme is then designed, inputs are provided and the experiment is set up. The researcher plants the seeds/shoots, manages the trial and harvests the crops. The subsequent trial is done in the same way with the researcher managing and farmer planting the crops. The farmer is then allowed to plant and manage the subsequent trials on their own using the methodology developed. Farmers are asked to supply IICA with the equivalent amount of seeds/shoots which had been given to them.

JAMAICA LIVESTOCK ASSOCIATION

The Jamaica Livestock Association (JLA) is a limited liability company which services member farmers and carries out commercial operations geared to providing inputs and markets for the agricultural sector.

The JLA has been involved in on-farm research since 1950. Through its close contact with members, farmers are approached about their interest in research. If they agree the necessary research is [illegible]ied out on their farm. In order to inform farmers of likely results of research on livestock, some pre-test checks have to be carried out. This is done so that the association can agree on some form of compensation for the farmers should the research have negative effects. On-farm research is not restricted to JLA members.

FARMERS' PARTICIPATION

The institutions which work directly with farmers in applied/adaptive research have been reporting varying degrees of participation and rates of adoption.

THE MINISTRY OF AGRICULTURE

The Ministry of Agriculture, through its extension services, develops personal contact with farmers. Farmers are therefore approached directly about their interest in participating. Due to the level of interaction, farmers who accept to have trials have participated and co-operated to a great extent. The Ministry has been hampered in its efforts because of budgetary constraints. However, of the farms that the Ministry was able to monitor, several reported higher yields due to rainfall, change in cultural practices and improved seed varieties. Few reporting lower yields said that they were due to poor seeds, disease and drought. Farmers have indicated that they have introduced new crops, developed new approaches to farming by learning new methods of land preparation, crop care and improved cultural practices. In one survey they reported a 88% adoption rate.[3]

COCONUT INDUSTRY BOARD

CIBCO has been involved with on-farm research in cases where they want to test the effect of different soil types on yield, quality, etc. They have been very successful in receiving participation of farmers as they have only requested on-farm trials with farmers with whom they have personal contact. In general they have had high rates of adoption of new methods. This can be attributed partly to the farmers access to the researchers who informs them fully on the operations being carried. They in turn are able to see the results of the operation, which motivates them to change their cultural practices.

3 Evaluation Report Cropping Systems Research (Jamaica) Project, Ministry of Agriculture - Data Bank and Evaluation Division.

THE COFFEE INDUSTRY
DEVELOPMENT COMPANY

CIDCO, in order to conduct research in different climatic conditions, has carried out research on private farms. Unlike many of the farmers' organisations, CIDCO had found that at first farmers were slow to participate in research. They would only participate if they knew the research officer very well or if they had contact with a successful farmer. Hence CIDCO had to conduct demonstration trials on their own farms before the farmers in the community agreed to participate. When farmers saw the results of the trials they often invited CIDCO to their farms to replicate the trials. Subsequently, they would adopt the new techniques.

Currently, farmers who agree to have trials have, in most cases, adopted the new techniques readily. Success has been identified by the large number of farmers requesting trials after they have been to farm demonstrations. Once the technique proves to be useful, adoption rate accelerates in the community as a whole.

CARIBBEAN AGRICULTURAL
RESEARCH AND DEVELOPMENT INSTITUTE

CARDI is essentially a research and development body. The Institute is not required to extend research results to farmers. However, CARDI has found that on-farm research is very effective in diffusing knowledge to farmers. This had led them to conduct training sessions with groups of farmers and write extension bulletins which are given to farmers who request them. Generally they have found that farmers are very keen on adoption and requesting further information once they have seen the success of field trials.

INTER-AMERICAN INSTITUTE
FOR CO-OPERATION IN AGRICULTURE

IICA's involvement in on-farm trials has been generally successful. The researchers have established good rapport and participation with farmers on whose farms they conduct trials. The researchers believe that rates of adoptions are high and where techniques have not been adopted in its entirety or not adopted at all, have been due to the

unavailability of funds to buy fertilizer and sprays so that they can apply them in the correct quantities.

IICA researchers have found that farmers whom they were involved with on trials were willing to depart from traditional practice as they were convinced of the benefits of new technology having seen the success of the "researcher-planted, researcher-managed" trials. Working closely with farmers in the "farmer-planted, farmer-managed" trials gave farmers confidence and enabled them to ask questions on general farming methods and techniques.

JAMAICA LIVESTOCK ASSOCIATION

The JLA has been involved in on-farm research for an extended period. They have had success in carrying out on-farm research and have been able to assist in filling the gap left by the Ministry of Agriculture. Field representative have reported qualitative and quantitative improvement in bovine fertility, pedigree upgrading and improved growth and production of livestock. Rate of adoption has been favourable in cases where field trials involve adoptable work. However, the JLA has had some set-back due to the nature of their work. Not all research result in improvement in livestock. In cases where research has a negative effect, the farmer has to be compensated. This causes an in-built bias as shortage of funds curtails the payment of compensation and only farmers who are willing to take the risks, participate in such trials. Hence the results are not really objective.

AGRICULTURAL RESEARCHERS

Nationally, the lack of adequate staffing of equipment and financing have greatly hampered research work. Some institutions like CARDI and IICA have provided technical support for the Ministry of Agriculture in research projects. However, the overall

snortage of research staff has impacted on the amount of research carried out. The current staffing in the research organisations is:

-	Ministry of Agriculture - Farming Systems and Extension	
	. Plant Protection	9 research officers
	. Crops	7 " "
	. Livestock	11 " "
	. Directors	3 research officers
-	Coconut Industry Board	3 research officers
-	Coffee Industry Development Company	3 research officers (2 full-time, 1 part-time)
-	Caribbean Agricultural Research & Development Institute	5 research officers
-	Inter-American Institute for Co-operation in Agriculture	1 research officer

The general shortage of research officers explains why agricultural research has not had a greater impact on farming in Jamaica. The Ministry of Agriculture has the largest body of qualified research officers in Jamaica. In addition to the 30 qualified research officers in the Farming Systems Research and Extension Unit, there are qualified technical officers who assist them. The other research divisions of the Ministry are also staffed with highly qualified personnel. Other research organisations throughout the island have very little staff in comparison to the magnitude of their operations.

OTHER INSTITUTIONS

Apart from the institutions commited to research, several other organisations have also been helping farmers to use adopted varieties, control pests and diseases and

generally improve cultural practices. Such bodies as the private voluntary organisations, College of Agriculture and the Jamaica Agricultural Society have been assisting farmers in gathering additional knowledge.

PRIVATE VOLUNTARY ORGANISATIONS

Private Voluntary Organisations, such as the Christian Action for Development in the Eastern Caribbean, gives support to a region wide land and food production programme. It sustains 28 agricultural projects, 90% of which are mixed crops and livestock. The majority of the activities take place on church owned land which landless and poor farmers are permitted to use rent free. An agricultural officer provides guidance for the programme and for the farmers. This single officer is less than adequate staffing for proper guidance of farmers and as such the benefits to be derived are spread thinly.

COLLEGE OF AGRICULTURE

The College of Agriculture is also instrumental in passing on knowledge to farmers. Through its programme, students are taught tropical agriculture which is relevant to the Jamaican situation. Many of the students have farming backgrounds prior to entering the College. Approximately 50% of the graduates go into full-time farming for themselves or for others. The other 50% of the graduates enter the farming services in the statutory bodies or bodies that provide support for agriculture and are part-time farmers at the same time. Most of the graduates have their own farms which may range in size from back yard plots to acres of cultivation. It is believe that these new farmers influence the old farmers to a great extent. There is an average of 80 graduates per year.

JAMAICA AGRICULTURAL SOCIETY

The Jamaica Agricultural Society comprises 1015 District Branch Societies and has a registered membership of over 100,000 farmers. In its present capacity, the Society organises farmers into project groups and facilitates agricultural extension by mobilising farmers. The JAS is supposed to hold monthly meetings and serve as a communication link between farmers and government. Over the years the organisation has become weak and ineffective as meetings were not being held regularly and activities had slowed down. However, the Society has potential for re-development into rural interest group or as centres for local self-help activities. This is important as the JAS is one of the few bodies that a small farmers can identify with. The pride that was associated with being a member of the JAS needs to be resuscitated.

The JAS has indicated its interest in being involved in stages of on-farm trials. This involvement would provide a concrete function which would involve farmers in a more meaningful way in the organisation's affairs. Farmers still see the JAS as a good source of knowledge through interaction with other farmers. This would also accelerate the rate of diffusion of new technology in farming.

PARTICIPATION IN FIELD TRIALS

Of the organisations surveyed which were not involved in on-farm research, all would be interested in participating in the future. They have however, stipulated various conditions under which they would participate. The conditions are as follows:

. Banana Board	Project must be approved by the Banana Board.
. Cocoa Industry Board	Project must not cause any change in its present function. Does not want to get involved in a government programme.
. Jamaica Agricultural Society	That research results are made available to the JAS. That travelling officers be assisted with the cost of travelling.
. Portland Blue Mountain Coffee Coop.	Project funds cover the payment of field officers involved in project.

The conditions stated by the various organisations show organisations want to be involved in on-farm trials but they want to maintain their present status and they are facing financial constraints. Hence it is clear that organisations of this kind can provide assistance with the diffusion of information to farmers given the necessary development of trained personnel and financing.

CONCLUSION

The farmers groups and organisations are favourably disposed to participating in on-farm trials. As each type of organisation has different contacts with farmers - whether in different areas or different crops - it is important that all of them be eligible for participation in the project. The Ministry of Agriculture too should be eligible for participation and hence funding ,like any of the other bodies. Where the Ministry does research for other bodies such as the Banana Board, Citrus Growers Association and The Cocoa Board, some clearly defined system has to be worked out to prevent both bodies from developing conflicting situations.

Church-based PVO's like CADEC should be eligible for grants like any other body as they too could be instrumental in diffusing knowledge to farmers through their "church plot cultivation system". Each application for funding however would have to be judged on its own merits. The recommended organisations which should be eligible for grants are as follows include:

- Ministry of Agriculture
- Coconut Industry Board
- Coffee Industry Development Company Limited
- Cocoa Industry
- Caribbean Agricultural Research and Development Institute
- Inter-American Institute for Co-operation in Agriculture
- Jamaica Livestock Association
- Christian Action for Development in the Eastern Caribbean
- Jamaica Agricultural Society

Other organisations such as the Sugar Industry Research Institute could apply for grants which would be judged on the merits of the cases. However, as the project aims to deal mainly with the problems of farmers, plantation type agriculture like sugar can production would not be considered for inclusion.

Monitoring Body

The proposed monitoring body which would be responsible for evaluating proposals and granting research and monitoring projects should exhibit the following characteristics:

	Min. Ag.	ACB	CARDI	JADF
- Be able to develop policies	x	x	x	x
- Coherence with organisational goals	-	x	-	x
- Be able to prioritise projects	x	x	x	x
- Be able to coordinate various projects	x	x	x	x
- Be independent of political or other affiliations	-	x	-	x
- Be informed and keep current on:				
. needs of producers	x	x	x	x
. natural goals	x	x	x	x
. market opportunities	x	x	x	x
- Have experience in carrying out similar operations	-	x	-	x
- Have the necessary accounting and reporting facilities	-	-	-	x
- Have trained and sufficient staff to carry out function	-	-	-	-
	6	9	6	10

Of the bodies that were considered namely:

- Ministry of Agriculture (Min. Ag.)
- Agricultural Credit Bank (ACB)
- Caribbean Agricultural Research and "Development" Institute (CARDI)
- Jamaica Agricultural Development Foundation (JADF)

only the JADF could satisfy most of the conditions. The JADF has had two years' experience in determining viability and suitability of projects and has in place proper accounting and reporting facilities are met. Staffing however would be inadequate for an operation of this magnitude but with adequate financing this could be improved.

The Board of the monitoring body should include representatives of the various groups that can be affected by the decisions made. Essentially, the board should include representatives of farmers and farmers' associations, agricultural finance and credit institutions, agri-business personnel, marketing corporations, Ministry of Agriculture representatives, other government and quasi-government agricultural body representatives and USAID representatives.

THE JAMAICA AGRICULTURAL DEVELOPMENT FOUNDATION

The Jamaica Agricultural Development Foundation (JADF) is both a private non-profit venture capital company and an educational foundation whose objective is to promote and develop sustainable agriculture and agri-business to improve the social and economic well-being of the people of Jamaica. The guiding objectives of the JADF are:

1. To building its resource base throgh a strategy of minimizing risk exposure and spreading investment in a large number of varied projects as well as channeling funds through intermediary organisations.

2. To serve the unique needs of its clients by means of creative loan financing.

3. To finance its operating expenses from investment income in the short-term and to become fully self-sufficient within the first six years of its life.

SOURCES OF REVENUE

The JADF received preliminary operational financing through a grant from USAID. The investment resources (bulk surlus commodities)) are donated by Land O'Lakes, a US dairy co-operative, and shipped by USAID. Grace Kennedy's Dairy Industries Limited processes these commodities into butter and cheese which are then distributed by various wholesalers. Margins obtained from retail sales are channelled into the loan scheme of the JADF. Additional revenue sources are being sought to accelerate the pace of lending.

VENTURE CAPITAL
INVESTMENT STRATEGIES

JADF utilises creative loan packaging so as to be able to attract those farmers who would not be able to obtain financing from commercial banks or other financial institutions.

In projects where the client lacks the required security but has the technical and managerial capability, the JADF will take equity in the operation and assist with such additional sources of capital. Consequently, eligibility requirements are confined to the potential viability of the project and to the credibility and managerial capability of the client. Farm size and socio-economic level are not utilized as criteria for evaluating clients.

GRANTS PROGRAMME

JADF already sponsors research projects. Emphasis is placed on research which can lead to increased agricultural projection or agri-business value added and which can be implemented in a short period of time. Areas of particular interest area:

- environment research,
- reduction of dependence on foreign inputs,
- livestock feed production,
- soil nutrients,
- energy,
- increased productivity of the dairy industry.

Procedures and criteria for selecting and processing grants are already in place. Grants are also available for training and education. $484,000 are earmarked for grants in 1985/86.

STRUCTURE

The Board of Directors is made up of representatives from financial institutions, private sector companies and farmers. Directors are selected based on their own personal skills rather than on their group representation. Directors are not compensated.

Present Board membership are:

Chairman	Elon Beckfod Managing Director Jamaica Citizens Bank
Secretary	Dnovan Anderson
Land O'Lake	Dr. La Vern Frech
Rockefeller Foundation	Mr. William Moody
Managing Director	Dr. Keith Roache
Farmer	Mrs. Beverly Morgan
Farmer	Mr. Ken Newman
Attorney	Mr. Ivor Alexander
Farmer	Mr. Clinton McGann
	Mr. Ivan Heron

The organization consists of five departments:

Finance	which handles accounting, financial planning and reporting, loan monitoring and investments.
Project Appraisal	conducts appraisal of projects.
Business Advisory Service	assists clients with preparing projects for submission, provides advice on production, marketing and other business problems.
Grants	appraises and monitors grants for research and education.
Commodity Marketing	monitors commodity, receival, process, distribution and sales.

There are presently on staff five provessionals with three being recruited to bring the numbers to eight during the month of July.

- Agricultural Specialist 1
- Finance 1
- Project Appraisal 1
- Grants Appraiisal 1
- Marketing 1

New Recruits

- Legal 1
- Agriculture/Business 1
- Deputy Managing Director 1

PERFORMANCE

Over the two years of operation, JADF has loan financed 45 projects and acquired an asset base of $33M. The pace of lending had been moderated so as to allow the organization to iron out its internal procedures and systems and to closely monitor its early projects.

SUITABLITY FOR
MONITORING BODY

THE JADF is suitably placed to act as the monitoring body for the proposed Agricultural Research Project as it is financial autonomous and politically independent. It also has established linkages with USAID/USDA through the initial grant through the PL480 Title II Scheme.

The institution does not now have in-house research skills, however, it does have the administrative capability to manage a larger grants programme.

3. FARMERS SURVEY

OBJECTIVES

The objectives of the farmer's survey were:

1. To evaluate the scope and experience of farmers of various size operations in on-farm trials.
2. To anlyse how research in agriculture is likely to affect the different social groupings of farmers.
3. To determine farmers' attitudes towards participation in field trials.
4. To examine the feasibility of replicating on-farm trials.
5. To determine what farmers see as their most pressing problems, and
6. To identify the effects of praedial larceny and to examine the methods used to counter it on the average farm.

A survey was also carried out of 10 farmers' organisations and farmers' group to:

1. Determine the conditions under which they would be willing to participate in on-farm trials to meet the project objectives.
2. Determine their present level of involvement with farmers and their past/current experiences with agricultural research projects.
3. Identify the possible negative effects of praedial larceny upon the results of research experiments, and
4. Determine measures to counter the negative effects of praedial larceny on research results.

Interviews were conducted with various commodity co-operatives, private voluntary organisations and farmers' organisations to gather additional data on:

1. the types of farmers now doing on-farm trials,

2. descriptions of institutions which work directly with farmers in applied/adaptive research and methods used, and

3. evaluation of the extent of success of the various types of institutions in obtaining participation by farmers and the level of success in adoption.

DEVELOPMENT OF THE SURVEY INSTRUMENT

Prior to the conducting of interviews, a review of literature relevant to the exercise was carried out to assist with questionnaire design. The questionnaires were reviewed and revised in conjunction with personnel of U.S.A.I.D. on June 11, 1986 to ensure appropriateness of the instrument. The survey instrument weas tested in the field before its application. The field survey team consisted of one interviewer and one interviewer/supervisor.

A conversational method of interviewing was adopted to ensure that farmers and/or organisations would fully understand the spirit of the questions asked and feel more comfortable during the interview.

SAMPLE SELECTION

General data from the Ministry of Agriculture, Data Bank and Evaluation Division was used to ascertain the general characteristics of the farming population of Jamaica and for selected specified areas. The areas chosen were:

	First Stage	Second stage
. South St. Elizabeth	20	8
. Wait-a-Bit, Trelawny	20	8
. Christiana, Manchester	20	8
. Guy's Hill	20	8
. Buff Bay Valley	20	8
. St. Andrew/St. Catherine	20	8

Second stage sampling procedure was adopted. A list of 20 farmers for each of the first five areas were chosen randomly from the Farmers' Inventory of the Ministry of Agriculture, and the last 20 were from listings from Jamaica Natinoal Export Commission adn Agro 21. Of the list of 20 farmers, eight were selected for interviews in each area.

REGIONAL SITES

The survey attempted to address the wide variations in regional agriculture by selecting areas which typified the different geo-physical conditions of the island and which were subject to the influence cf on-farm research, experiments or demonstrations.

South St. Elizabeth is located in the southern coastal plains and lies between two mounta ranges. It is primarily a "small farmer" region. Farms average 2 1/2 to five acres in size and the farmers are generally between the ages of 17 and 50 years. Rainfall is

minimal and it is considered a dry region. Soil content is high in bauxite and in a few parts of the region, limestone. Principal crops grown are tomatoes, carrots, escallion, water mellons, cassava, thyme, onions, peppers and peanuts. On-farm trials growing cassava had been carried out by the Inter-American Institute for Co-operation in Agriculture (IICA) and peanut trials had been carried out by Caribbean Agricultural Research and Development Institute (CARDI) in this region.

Christiana in the central uplands fell under the Integrated Rural Development Programme (IRDP). The Christiana region is dominated by small farms of under five acres. Fragmentation of parcels is a dominant feature of the tenurial system. Approximately 2/3 of the farmers grow irish potatoes. Other crops grown are peas, cabbage, yam, beans and carrots. The Ministry of Agriculture had carried out various on-farm trials in this region. The Christiana Potato Co-operative - a voluntary marketing organisation - serves the region.

Wait-a-Bit is a region of predominantly small farms of less than five acres. The terrain is hilly and is generally subject to soil erosion. Yam is the main crop. Other crops grown are bananas, irish potatoes, corn, peas, cocoa and chocolates. IICA had been conducting on-farm trials in the area based around hillside farming and intercropping with yam. Farmers in the region have been exposed to several other technological changes in farming through assistance from various international agencies.

Guy's Hill is a focal point where the boundaries of St. Mary, St. Ann and St. Catherine meet to form a thriving farming community. The terrain in the region is generally undulating. Mixed farming is the main activity of the region with most farmers cultivating cabbage, tomatoes, pumpkin, potatoes, peas, corn and ham. On-farm trials with potato and ginger had been carried out in the area by IICA.

Buff Bay Valley, parts of St. Andrew and St. Catherine in the western uplands were selected because of the variety of farming systems which could be tapped, ranging from coffee plantations, fish farming, bee farming, flori-culture and traditional mixed farming. Farm sizes vary in these areas although small farms predominate. Agriculture is export oriented in these areas as the majority of farmers grow bananas, coffee, yams, chocolate and cocoa. The majority of smaller farmers in the region are subsistence farmers. Additionally, the limited livestock activity is generally on a small scale and for local consumption purposes.

The farmers in St. Andrew/St. Catherine were selected randomly for their type of practice, from the Jamaica National Export Corporation Commission, list of growers and exporters and the Agro-21 list of farmers. These latter sources were chosen so as to capture a wide cross section of farmers of different socio-economic levels, educational levels, farm types and sizes.

SAMPLE FRAME

For purposes of the sample frame construction, farmers were defined as those heads of households who had available to them at least 1/2 acre of land and assumed the risks of farming that land. This definition did not exclude farmers from also being hired managers on other farms besides their own. However, those who were exclusively hired managers were not included in the sample frame.

The survey of farmers was launched on Monday, June 16th. Farmers were, for the most part, co-operative. Four farmers who refused to co-operate after a thorough explanation, were dropped from the survey and four others were chosen. The questionnaires were checked daily for consistency and completeness of answers.

SURVEY RESULTS

Social Inventory of Farmers

Full-time farmers comprised 83% of the farmers that were included in the survey. The following table shows the breakdown:

Table 3

SOCIO-ECONOMIC LEVELS OF FARMERS

Socio-Economic Local	Full-Time Farmers	Part-Time Farmers	Total
Upper Level	4% (2)	-	4% (2)
Middle Level	6% (3)	13% (6)	19% ((9)
Lower-Middle Level	4% (2)	2% (1)	6% (3)
Lower Level	69% (33)	2% (1)	71% (34)
	83% (40)	17% (8)	100% (48)

Essentially, traditional farmers tended to treat farming as a full-time occupation. They usually undertake the risk of farming either their own or their parents's land and that was considered to be sufficient. In order to secure themselves however, they grew multiple crops. By so doing, they guarded themselves against total loss of produce which could arise from diseases, pests, drought or heavy rain. Another reason for growing mixed crops was the on-going availability of cash as different crops were harvested at different times. The family too, would have as much food as possible all year. Today, many farmers continue to grow mixed crops for the same reasons and this was supported by the survey results. The following table shows the breakdown of full-time and part-time farmers and the large percentage of farmers growing mixed crops.

Table 4

FARM TYPE BY DEGREE OF INVOLVEMENT IN FARMING

FARM TYPE	FULL TIME FARMER	PART TIME FARMER	TOTAL
Livestock	4% (2)	-	4% (2)
Mixed Crop	73% (35)	-	84% (40)
One Crop	2% (1)	-	2% (1)
Horticulture	4% (2)	-	4% (2)
Fish	-	2% (1)	2% (1)
Fish & Mixed Crops	-	2% (1)	2% (1)
Apiary	-	2% (1)	2% (1)
	83% (40)	17% (8)	100% (48)

The majority of full-time farmers tended to own plots under 25 acres in size, as shown in the survey results (see table below). Many of them would have liked to increase their land holdings but the acquisition of land proved for many to be difficult as the high level of demand caused prospective sellers to increase prices. It has been difficult to get holdings contiguous to existing parcels. Consequently, fragmented holdings typify the small and medium farmers' properties. By using intensive farming systems farmers have succeeded in making units as small as five acres into economically feasible units. From such units the target farm family demand can be met and any residue can be sent to the market.

Table 5

	FARM SIZE CATEGORIES	
FARM SIZE	FULL TIME FARMER	PART TIME FARMER
Under 5 acres	48% (23)	7% (3)
5 to 25 acres	21% .(10)	2% (1)
Large over 25 acres	14% (7)	8% (4)
	83% (40)	17% (8)

EDUCATION

In general, the traditional small farmers have had primary level education. This was also evidenced by the survey results.

Table 6

FARM SIZE AND EDUCATION LEVEL

EDUCATION	UNDER 5 ACRES	5-25 ACRES	OVER 25 ACRES	TOTAL
Non-literature	8% (4)	-	-	8% (4)
Primary	42% (20)	21% (10)	7% (3)	70% (33)
Secondary	2% (1)	-	8% (4)	10% (5)
University	2% (1)	2% (1)	8% (4)	12% (6)
	54% (26)	23% (11)	23% (11)	100% (48)

Farmers educational level also impact on whether they did full time farming or part-time farming. The more educated farmers tended to farm part-time and pursue their other careers as well. In such cases a hired manager would carry out the day-to-day operations of the farm and the owner would make policy decisons. The relationship between education level and full-time farming is shown below:-

Table 7

FARMERS EDUCATION LEVEL

EDUCATION	FULL TIME FARMER	PART TIME FARMER	TOTAL
University	-	13% (6)	13% (6)
Secondary	10% (5)	-	10% (5)
Primary	65% (31)	4% (2)	69% (33)
Non-Literature	8% (4)	-	8% (4)
	83% (40)	17% (8)	100% (48)

The survey results showed that the majority of farmers in general and full-time farmers in particular had primary level education. University graduates were all part-time farmers. The non-literature farmers were also full-time farmers, growing mixed crops on small farms.

EXTENT OF EXPERIENCE IN ON-FARM TRIALS

Jamaican farmers generally have had little experience with on-farm trials. Until recently, traditional extension methods such as model farms, field visits, field days and training programmes were employed as methods for diffusing agricultural technology. Our interviews with researchers involved with recent on-farm trial projects indicated that on-farm trials have yielded positive results and show great potential for decreasing formal large-scale extension services. The main benefit reported by researchers is that on-farm trials expedite the diffusion of knowledge to farmers, and results in high rates of adoption. Organisations such as IICA have also found that the rate of adoption of techniques by neighbouring farmers, is accelerated when field trials are used by several farmers in a community.

In this survey, forty-eight farmers from the six designated areas were interviewed; of these 44% had on-farm trials or experiments on their farms, the other 56% had never been approached about the possibility of allowing research to be carried out on their farms. Those farmers who were involved in field trials concentrated on the following crops: tomatoes, carrots, yams, potatoes, peas, cabbage, onions, ginger and corn. Other areas of research also included the growing of grass for soil control, chemical analyses of various sprays, fertilizer trials and studies of mechanical farming equipment. Farmers reported a high level of receptivity to the field trials as they felt that the experience was complementary to their farming operation.

DURATION OF TRIALS

Farmers in the survey had participated in trials for varying periods of time depending on the nature of the research. For some farmers research work had lasted from two months to two years. In other cases, the trials were for one day every three months over a one-year period.

Table 8

DURATION OF FIELD TRIALS

TIME PERIOD	NO. OF FARMER TRIAL	% OF FIELD
Up to six months	9	43%
6 months to 1 year	7	33%
1 year to 18 months	1	5%
18 months to 24 month	4	19%
	21	100

The majority of farmers reported that they were not hampered by the duration of research because they used land which would have been left idle, and did not otherwise interrupt the normal farming operation. In fact, several reported that it was complementary to their other activities. However, 5% of the farmers felt that long term trials created some financial loss as the crops (in this case maize) were planted at a higher density than normal, and tied up capital and land for an extended period of time. In cases where, the trial did not require the farmer to change his crop mix, for example, chemical spraying and soil control trials, farmers did not experience any financial disadvantages despite the duration of the trials. By and large, field trials do not require considerable land area. In this survey trials used between 1/4 acre and 1 acre of farmer's land.

PAYMENTS FOR FIELD TRIALS

Research organisations have generally operated in a policy framework whereby farmers are not paid cash to have research carried out on their farms. They however provide a range of incentives, and ensure that research work should not cause the farmer to incur extra cost. Consequently, research organisations from time to time have given farmers small sums of money to offset direct expenses. In the survey group, the following figures obtained for cash payments.

Table 9

CASH PAYMENTS RECEIVED FOR PARTICIPATION IN ON-FARM TRIALS

PAYMENT	NUMBER	% OF ON-FARM TRIALS
Payment for final crop	1	5
Payment for meals & labour of staff	1	5
Small payment	1	5
$40 for expenses	2	10
No payment	16	75
	21	100

INCENTIVES

The incentives used are generally related directly to the research activities. 81% of the farmers received incentives in the form of fertilizer, seeds, shoots and chemical sprays. Some farmers received all the inputs necessary for production, whilst others received mainly seeds and fertilizers. In some cases, the inputs were supplied to the farmers on credit.

Some organisations bought the final products from the farmers whilst others allowed the farmers to return to the organisation, an equivalent amount of seeds or shoots while retaining the surplus of produce for themselves. Those incentives have proved to be more than adequate and this was particularly so when the research work was carried out under the farmers normal programme of cultivation. Farmers view this approach to incentives as beneficial to them.

WILLINGNESS TO PARTICIPATE IN ON-FARM RESEARCH

Farmer's receptivity to on-farm trials is such that most of those farmers who had engaged in on-farm trials were willing to participate in the project which was presented. Only one farmer in this category refused. Of the 48 farmers surveyed, 96% said that they would allow "a reputable national organisation" to carry out research projects in a small area of their farm; 2% said that their agreement would depend on which organisation was carrying out the research and what they would be doing. Only 2% of those interviewed were unwilling to allow the research on their farms. Of the 27 farmers who had never had trials on their farms, most (96%) said that they would be willing to participate in on-farm trials. 4% were unwilling to participate.

Farmers wre quite rational in their decision making regarding the venture and recognise as benefits:

a) the opportunity to learn new skills and increase their knowledge of farming,

b) the availability of incentives to help lower their overheads.

The conditions under which they will participate are quite reasonable and reflect the real constraints which they face.

Table 10

CONDITIONS FOR PARTICIPATION IN ON-FARM TRIALS

CONDITIONS	% OF RESPONSES
As long as the practical work would be done by the researcher.	4%
If food would be provided for the staff involved in the project.	4%
If the inputs (seeds, fertilizer, chemical sprays etc.) would be provided.	26%
If payment to care for crops would be provided.	4%
If land would be provided.	4%
If research does not increase the overheads of the farm.	4%
If some form of financing would be provided.	4%
As long as the staff involved are honest people.	4%
As long as the project is profitable.	4%
If able to acquire more land.	4%
No conditions attached but as long as project does not interfere with the normal operations of the farm.	38%
	100%

All farmers who indicated willingness to participate also were willing to contribute to trials. For small farmers all inputs except labour would be difficult to acquire, however, they exhibit interest in contributing resources within their means. The survey results show that farmers would be willing to contribute:

- seeds,
- land,
- labour for cooking meals of staff,
- farm-labour,
- fertilizer,
- chemical sprays,
- supervision and day to day management skills.

62% would provide farm labour, which represents for many farmers the only resource that they had at their disposal. Labour contribution mentioned by farmers ranged from management skills to 3 days per week. Other tangible contributions offered were all the seeds and chemicals required, 8 bags of fertilizer and land.

Our conclusion is that, there is a target group of farmers who exhibit a high level of receptivity to on-farm trials. This group includes farmers who have already been involved in trials as those who have never been approached. The group recognises the benefits to be derived from agricultural research, but also realises that their involvement will require certain resource commitments. There is willingness to provide land, labour and inputs in accordance with the farmer's means, providing the organization is able to offer incentives which satisfy the farmer's own objectives for his operation.

RESULTS OF ON-FARM TRIALS

This survey attempted to ascertain farmers' perception of the long term value of on-farm trials and to determine the extent to which participation in research could prove beneficial to the productive capacity of the farming sector. The questions were designed to determine success rate, adoption rate and multiplier effect.

Success Rate

The survey results suggest that the on-farm trials which were carried out, on the whole were successful. 62% of respondents indicated complete success with the venture, 29% of the respondents reported some success and 9% felt that the results were a failure.

Income Effect

52% of participating farmers reported increases in income. 38% reported either no income effect or marginal income effect, as earnings from one crop were offset by losses from another. 10% had losses.

One farmer who did in fact produce more, was unable to sell the surplus production and had to use what was produced for home consumption.

Yield Effect

Farmers are well aware of the importance of increased yields as a measure of the success of trials. 67% of participating farmers reported increased yields, 24% experienced no change while 9% actually had lower yields.

Further analysis of the above data reveals that the majority of farmers viewed the venture as successful, although the effect on income and yields was not experienced by all. On the other hand, none of the farmers who reported failure had obtained income or yield increases.

Table 11

RESULTS OF TRIALS

	Results Increased Income	Results Increased Yields
Farmers reporting success	82%	77%
Farmers reporting partial success.	18%	23%
Farmers reporting failure	-	-
	100%	100%

Our conclusion is that farmers identify with the research objectives of on-farm trials and have the ability to measure success or failure in terms of meaningful results.

Adoption Rate

62% of the respondents who had engaged in on-farm trials continued to use the practice or techniques for subsequent seasons. 29% discontinued the technology, while 10% continued to use only the technology which proved successful. Those farmers who reported adoption of all the technology were for the most part the ones who had experienced successful on-farm trials.

Table 12

EXPERIENCES OF FARMERS WHO ADOPTED TECHNOLOGY

Successful experience	69%
Partially successful experience	23%
Failure (due to drought)	8%
	100%

Those farmers who discontinued the practices (29%) gave the following reasons:

- no change in income,
- could not sell produce, despite increased yields,
- decreased yields
- unavailability of seeds, fertilizers or sprays used in trials.

We conclude that farmers respond quite rationally to the process of transferring technology from the trial experience into their normal farming operations. Farmers will adopt and continue to practice where the technique is directly beneficial to production and his capacity to increase income.

Adoption of Technology

Replication through field trials apparently would be an effective means of diffusion of new techniques. From the survey, 96% (26) of farmers who never had trials on their farms, said that they would be willing to adopt new methods or techniques from

other farmers in the area. Of the farmers who said that they would be willing to adopt from other farmers, 96% (25) said that they would be able to influence other farmers in the new methods or practices that they learnt. In general, farmers were favourably disposed to assisting other farmers as the survey results suggest. The following table shows the mean level of diffusion of knowledge.

MEAN LEVEL OF DIFFUSION OF KNOWLEDGE

DIFFUSION TO FARMERS	CLASS MARK(X)	FREQUENCY(f)	fX
0-4	2	7	14
5-9	7	9	63
10-14	12	14	168
15-19	17	0	0
20-24	22	4	88
25-29	27	2	54
30-34	32	1	32
35-39	37	0	0
40-44	42	1	42
45-49	47	1	47
50-54	52	3	156
55-59	57	2	114
		44	778

$$X = \frac{\sum fX}{\sum f} = \frac{778}{44} = 17.68$$

$$= 18$$

Where a farmer stipulates that he can influence more than 55 other farmers, a range of 55-59 is used as it is unlikely, for all practical purposes for such a farmer to influence more than 59 other farmers in the adoption of a new technique.

The mean diffusion level of one farmer influencing 17 to 18 other farmers with the new technology is the expected rate of diffusion.

MODELS FOR DIFFUSION OF AGRICULTURAL KNOWLEDGE

The majority of Jamaican farmers lack formal training in agriculture. Farming practices are usually acquired by traditional and informal means and farmers tend to change their methods only under conditions of certainity and where the benefits are immediate and obvious.

A primary objective of this project is to provide a mechanism which ensures that, small farmers make permanent and fundamental change in farm practices as a result of participation in on-farm trials. This survey attempted to identify the various channels through which farmers have acquired agricultural knowledge in order to recommend suitable strategies to provide support and follow-up to farmers who show a desire to adopt new farming technology.

The sample contained a majority of farmers with a low level of education. The primary means of acquiring agricultural skills has been through informal and practical experiences. The data shows that a majority of farmers are self-taught or learn from their families during the early stages of their lives. Formal training, learning from books and journals is not the usual method of acquiring skills. However, organisational contracts have been fairly important in affording farmers the opportunity to interact with other farmers and in exposing farmers to new information provided by extension officers, government agents and school teachers.

In terms of organisational influence, the Ministry of Agriculture is the most frequently cited organisation which has assisted farmers. The JAS and JLA are recognised by farmers as having had some influence also, despite the low level of attendance of farmers at meetings and the general decline of the activity level of these long-standing bodies. Newer organisations such as JNIP and Agro 21 are cited by upper and middle income farmers as the most influential in the acquisition of information and the development of their farming technology.

SOURCES OF ACQUIRING AGRICULTURAL KNOWLEDGE

Self-taught	36
Family	24
Other farmers/friends	15
Extension methods	14
Farm work/on-the-job training	4
Organisations (IICA)	4
Formal Training	3
Research	2
Books/journals	2

SOURCES OF SPECIFIC INFORMATION

Extension officers	22
Leading farmers in area	22
Ministry of Agriculture	9
Commodity Boards	9
IICA	3
UWI	2
JNIP	2
Agro 21	1
PVO	1

ORGANISATION INFLUENCE

Organisation	Occupation	Socio-econ. Level	Education	Farm Type	Farm Size	Years Farming
IICA	Full-time farmer	Lower	Primary	Mixed crop	Small	6-10 years
IICA, Min. of Agriculture	"	"	"	"	Medium	6-10 "
IICA	"	Lower-middle	Secondary	"	Small	6-10 "
Private Voluntary Organ.	"	Lower	Primary	Mixed crop	Medium	Over 30 years
Ministry of Agri., Universities and Schools	Part-time	Middle	University	Mixed crop	Large	Over 30 "
Ministry of Agriculture	Full-time	Lower	Primary	Mixed crop	Medium	11-15 years
Ministry of Agriculture	"	"	"	"	Small	Over 30 years
Ministry of Agriculture	Part-time	Middle	University	Mixed crop	Large	16-20 years
Ministry of Agriculture	Full-time	Lower	Primary	Mixed crop	Small	16-20 "
Ministry of Agriculture	"	"	"	"		6-10 "
Min. of Agri. - Lands Authority	Full-time	Middle	Secondary	Mixed crop	Large	Over 30 years
Lands Authority	"	Lower	Primary	"	Small	Over 30 years
Project Land Lease	"	"	"	"	"	16-20 years
St. Augustine University	Part-time	Middle	University	Mixed crop	Medium	6-10 years
JNIP	Full-time	Upper	Secondary	Ornamental Horticulture	Large	1-5 "
JNIP	Part-time	Middle	University	Apiary	Small	1-5 "
Agro 21	Part-time	Middle	University	Fish	Large	1-5 "

An important finding is the number of farmers who report the influence of leading farmers in the community. Farm communities have a well developed social infrastructure which revolves around significant persons such as large farmers, professionals, school teachers and religous leaders. The school and church are the primary social institutions for rural people. Small farmers often also find part-time employment on large farms to supplement income and use that opportunity to learn new techniques

In this survey, farmers were asked whether neighbouring farmers had been influenced by their experience in on-farm trials. 62% of farmers felt that other farmers had been influenced and had adopted the techniques being propagated on their individual farm. 38% reported no responsiveness from other farmers.

When asked about their own ability to impact on other farmers, farmers in the survey reported being able to influence an average of 17-18 other farmers.

The data suggests that a number of opportunities for diffusion are possible.

1. Farmer-to-Farmer Contacts

The model which appears to have the greatest impact is one where leading farmers are utilized to share technology with neighbouring farmers. The 44 farmers in this survey had a multiplier effect of 17.

The model need not exclude the farmers' organisations which has broad-based member-ship and which farmers recognise as having contributed to their development.

2. Traditional Extension Methods

A number of farmers report that Government extension services were of benefit to them, and the value of this should not be ignored. Training days, extension visits and demonstration farms may not have the same level of impact. Nonetheless, farmers give some credence to the knowledge obtained from these sources.

FARMERS PROBLEMS

The project's objective is to channel research efforts into areas which can best assist farmers to solve their day to day problems. The perceived problems of farmers in Jamaica vary considerably with socio-economic conditions. Large farmers report access to financing and cash flow as a major problem area. Small farmers on the other hand have adjusted to the absence of large scale credit schemes offered by the government, and face the usual problems of input costs, availability of inputs and marketing and labour.

Problems with Inputs

In this survey, the cost and availability of inputs were the most frequently cited problems.

Table 14

FARMERS REPORTED PROBLEMS - INPUTS

	No. of Farmers Reporting	
High price & availability of fertilizer	16	
Quality of fertilizer	1	17
Cost of sprays	7	7
Price and availability of seeds	5	5
Price and availability of other inputs	8	8
		37

What is clear from the responses of farmers is that not only is price a constraint to access, but also the system of distribution whereby farmers can obtain the inputs at close proximity is faulty.

Problems with Marketing & Transport

This is also closely related to the distribution of inputs. The condition of roads and means of transporting goods and produce between the towns and farms is a constraint to many farmers.

Table 15

REPORTED PROBLEMS - MARKETING AND TRANSPORT

Marketing	8
Poor roads	1
Transport of goods	1
	10

Problems with Labour

The availability of labour on a timely basis and at a price which the farmer can afford is a long standing problem for the farming sector. Farm labour demand competes with off-farm work which is the preferred form of employment for the rural population, and many farmers experience great frustration as field workers prove unreliable at critical periods of land preparation and harvesting. 11 farmers cited this as a problem, in this survey.

Given the finding that 62% had to increase labour input while using research methods in on-farm trials, the availability and cost of labour could prove to be a deterrent for some farmers.

The majority (83%) of farmers who obviously took the experience seriously and retained the farm practices sustained higher labour costs, because of the need to take due care with work or to execute a greater number of tasks. Some farmers required additional labour but were unable to afford it.

The problem of labour therefore, has implications both for farmers' ability to sustain practices and also for their meaningful application of labour intensive techniques during the on-farm trials.

Research Related Problems

Farmers are not necessarily aware of the specific problems which research can address. They do report certain problems which research efforts may in the long run be able to correct.

Table 16

RESEARCH RELATED PROBLEMS

REPORTING	NO. OF FARMERS
Scarcity of cultivatable land	4
Poor soil	2
Pests	2
Lack of water	3
Weeds	1
	12

In summary, the major problems being experienced by farmers relate to cost and availability of inputs and this in fact affects the financial viability of the farm. The farmers' earnings do not afford him the opportunity to purchase inputs to ensure a continuous and stable operation. The success of research experiences and the long term impact of this project is constrained by this fact.

It is clear that even when farmers demonstrate the willingness to adopt a particular practice, they are unable to sustain its application if it involves new technology which is neither available nor affordable once the original source has terminated the supply. On the other hand, the farmers perceive the need for research results which can address problems of poor soil, pests and weeds and which can assist them to maximize the productivity of the scarce land resource available to them.

PRAEDIAL LARCENY

Praedial larceny is a significant problem encountered in agriculture in Jamaica, and the incidence has been increasing as a result of unemployment and harsh economic conditions. The official figures place the volume of produce stolen at 20% of production. (Source: JLA Statistics)

Of the farmers surveyed, 83% had been victims of praedial larceny, however, only two farmers reported that stolen produce was a problem. 67% of farmers had done nothing to counteract the problem. The reasons given for the apparent acceptance of praedial larceny as a "way of life" are instructive.

- never being able to catch the thieves,
- not having enough for others to steal,
- fearing that the thieves may kill them,
- that protection would involve too much effort,
- that there are no methods of protection that can work,
- that thieves principally steal from big-farmers,
- that people who take the crops are usually related to the farmers,
- fencing the property does not help,
- poisoning the crops is dangerous, and
- never had any problems with thieves.

It is clear that farmers feel quite powerless in the face of the pervasiveness of stealing. 33% of farmers however, have made attempts to protect their crops from theft. The reported measures generally involve some cost and are practiced by the larger farmers. Small farmers with plots at some distance from the homestead are unable to monitor the situation and therefore do very little -

- keeping stock or crops close to home,
- watching crops themselves or using watchmen,
- using guard dogs,
- fencing,
- using weapons (inclusive of licenced fire-arm),

- giving people in the community planting materials so that they would refrain from stealing,

- keeping close links with the police.

The most frequently used method of protection was farmers watching crops - either themselves or hiring watchment - those farmers comprised 69% of the farmers using some form of protection. 25% of the farmers used weapons such as licenced fire-arms as their main form of protection. In most cases, more than one method was used as no method used singularly was found to be very effective.

The institutions carrying out agricultural research have had to use varying methods of protection against praedial larceny of research produce. They have used methods to stop the theft as well as to counter the possible negative effects of praedial larceny on research results. Methods of protection include:

- Introduction of "Authorised Persons" system of surveillance (Government Programme),
- Better fencing,
- Security guards,
- Restricting movements of the general public in research stations,
- Plant vulnerable crops close to areas of high security.

As far as research work was concerned, praedial larceny of the research crops can give misleading results. Some forms which were used to counter the negative effects on research results were:

- exclude affected areas from yield determination,
- use analysis techniques for unablanced design,
- plant a few dummy rows of same crops in the areas which are more susceptible to thieves e.g. plots near roads.

4. SUMMARY, CONCLUSIONS AND RECOMMENDATIONS

FARMERS RECEPTIVITY TO RESEARCH

The findings of this survey indicate that in the communities which have experienced on-farm trials, there is a high degree of receptivity to the results of research which is relevant to farmer's needs e.g. higher yielding varieties of crops, new breeds and varieties of livestock and increased knowledge on means of pest control - both biologically and chemically, fertilizer inputs and substitutes and general improvement in farming techniques. Farmers surveyed relate the research experience to increases in yields and income. Receptivity to on-farm trials was also found among farmers who did not participate in research activities. It is apparent that opportunities for meangingful improvement in farming technology exist and that farmers attitudes facilitate large-scale efforts in this regard.

CONDITIONS FOR PARTICIPATION

The survey found that those farmers who were willing to participate in on-farm trials came from all the socio-econbomic levels. Non-participants (resisters) on the other hand, were generally small farmers, of very low educational level with little or no exposure to organisations, or prior learning experiences. Only 4% of farmers in the survey were unwilling to participate.

Farmer's willingness to participate is accompanied by certain conditions which include:-

- Incentives such as inputs, markets for produce and cash payments to offset direct expenses.
- Constraints relating to full involvement and completion of the project and adoption do exist.

The most important being the farmer's ability to afford and obtain the inputs and labour required for the experiment. Projects which complement the farmer's existing operation, crop mix and market demand and operations which demonstrate immediate benefits are those most likely to receive commitment and attention from farmers. Projects which require significant outlay of additional labour and timely labour inputs at critical periods are likely to present some difficulties to the less viable farmers, who often face labour-management problems.

CHANNELS FOR PARTICIPATION AND DIFFUSION

This survey identified several organisations to which farmers have been responding for technology advice and research. These are described in Chapter 2 of this report.

From the results described, we conclude that, in addition to organisations, farmers themselves provide an effective channel for diffusing research results and for encouraging participation. Our analysis of the data suggests that for each participating farmer an average of 17 additional farmers can be affected. Important and successful farmers in a community are also influential in diffusing technology by means of:

a) hiring small farmers to work on their farms and teaching them new techniques.

b) assisting with the distribution of inputs and specialised materials which are difficult to obtain.

c) informally sharing technology and advice during normal social interaction with neighbours.

The effectiveness of traditional extension approaches (training days, demonstration forms) was also recorded by this survey. It appears that while adoption may not be immediate nor complete, farmers do acquire some new knowledge from these methods.

Methods selected for diffusion should however give farmers the opportunity to try out and experiment with technology and should not involve experiences which require formalized nor classroom type situations.

This would suggest that concentration of research efforts in specific communities where climatic conditions, crop mix, labour market and other factors create similar conditions for all farmers involved in a particular venture is the most suitable method of organization. This would allow for informal sharing during the normal course of community life and afford farmers the opportunity to come together for training days and demonstrations. It should be advisable to involve a minimum of 10 farmers in each community directly in on-farm trials and provide support to the anticipated 170 or 180 farmers who are likely to be affected.

EXPECTED BENEFITS

Given the observed high rate of adoption (62%) and reported impact on income and yield, we conclude that this project will make a definite contribution to increased productivity and therefore income and living standards among farmers.

Employment will be generated from the additional labour demand created by on-farm trials in the short-term and from long-term requirements resulting from permanent adoption. A secondary benefit will be the increase in the supply of domestic food to consumers as well as to farm families. This, however, is largely dependent on the ability of the marketing system to cope with higher production volumes. Some farmers continue to have difficulty transporting produce and selling produce.

CONSTRAINTS

The survey identified a number of constraints to farmers continued use of new technology. The most significant constraints are:

i) cost and availability of inputs

ii) labour

iii) praedial larceny.

BIBLIOGRAPHY

Armstrong, G.R. — Private Voluntary Organisations in Jamaica and their Potential Role in Hillside Agricultural Development. February, 1986

Blustain, Harvey; LeFranc, Elsie — Strategies for Organization of Small-Farm Agriculture in Jamaica. April 1981

Carloni, A. — Jamaica - Small Hillside Farmer Project. Findings of the Socio-economic Survey February 1984

Edwards, David — Economic Study of Small Farming in Jamaica. 1961

Gardner, Carlene — Uplands Survey 1978

Institute for Development Anthropology — Co-operative Agreement on Human Settlements and Natural Resource Systems Analysis

Ministry of Agriculture — Data Bank and Evaluation Division; Cropping Systems Research (Jamaica) Project November, 1984 - October, 1985

Mitchell, Rutty — Social Forces Affecting Farmer Decisions - Assessment of Hillside Agriculture in Two Watersheds of Jamaica

Nolan, M.A. — An analysis of the Second Integrated Rural Development Project in Jamaica July 1985

Office of Agriculture and Rural Development Bureau for Latin America and the Caribbean — An A.I.D. Strategy for Supporting Agricultural Research capacity - Building in Latin America May 1986

Town Planning Department and United Nations Special Fund Project — National Atlas of Jamaica

The Ohio State University, University of the West Indies and MInistry of Agriculture — Farm - Household Credit Behaviour: A Case Study of the Jamaican Experience March 1980

The Statistical Institute of Jamaica — The Labour Force, 1984

United States Department of Agriculture — The Small Farmer in Jamaican Agriculture: An Assessment of Constraints and Opportunities. November 1978

Annex G (2)
Social Analysis

NOTES ON INCORPORATING WOMEN INTO THE JAMAICA AGRICULTURAL RESEARCH PROJECT

The project can incorporate women at a number of points in project development and implementation: in design; represented on the Research Advisory Council and/or Executive Council of the RAC; as researchers receiving grants or contracts from the project; as recipients of training; and, most importantly, as users of research findings -- as producers.

During the initial design and early implementation phase of the project, the views of women and people representing women's concerns can be solicited as part of the process of assessing research needs in the country. Such groups should also be contacted for names of potential RAC members.

Membership in the Research Advisory Council. It is not the number of women on the RAC that will determine whether its policy direction is favorable to including women as research beneficiaries, but whether the groups on the RAC themselves have many women members or represent women's concerns specifically. The WID office in AID and IICA, which has undertaken some studies of women in Jamaica, may be able to help identify such groups. For example, there may be PVO's which deal extensively with rural women. There may be other AID projects with a significant emphasis on women's participation. Government agencies in food and nutrition or home economics may be useful to contact. The Carloni study noted that while 40% of male farmers belong to an extension group, 57% belong to the JAS, and 20% belong to the PCB, only 21% of women belong to any of the three.

Recipients of Contracts, Grants, and Training. It would require a real commitment to incorporate women at this point of the project, but it can be done. The first task is probably investigative: are there women researchers in Jamaica? Where are they and what are they doing? Second, special care should be taken to solicit proposals from them. The research program should specifically help them develop proposals for funding. Male research leaders (recipients of contracts and grants) should be encouraged to hire women to assist in their own research.

Probably, the number of female researchers is miniscule. In this case, the project will need to look further at the training grounds for Jamaican researchers: the agricultural schools and graduate programs. How many women are coming out of this system, and what happens to them? Usually there are very few women in

this field. The project then faces a decision about its long term commitment to incorporating women into the project and into agricultural research generally. There are ways of improving women's participation as researchers long before the project ends, by increasing training of women in this area. For example, if AID helps fund scholarships in this area, a serious effort to seek out women for them can be undertaken. Special incentives may be necessary to attract women to scholarships in agriculture and/or agricultural research. AID can assist at the undergraduate level or lower (through UWI, the new College of Agriculture, etc.) to bring women into the field. Since the College of Agriculture is already heavily supported by AID, seeking out qualified women for training may already be well in process.

Beneficiaries. The most important place where women should be incorporated into this project, however, is as project beneficiaries--as users of new technologies. How can this project assure that women in fact will benefit from this process of generating and diffusing new technologies?

Before examining ways of increasing the changes of having the project benefit women as well as men, it might be worthwhile to note how difficult it has often been to incorporate any social concerns into agricultural research and extension programs. Agricultural research outputs--the new technologies produced--appear to develop from a scientifically neutral process. In theory, they might be though to be of equal benefit to anyone who chooses to adopt them, men or women, rich or poor. In fact, however, there is usually a bias in the process of technology generation and diffusion which tends to favor larger producers over smaller ones and men over women. (Often women tend also to be smaller producers, so are doubly hurt by this bias).

First, to the extent that the research system listens and responds to articulated demands from client groups, it is often the larger farmers, with a stronger voice in the political system, whose research demands are attended first. Technologies and areas of research appropriate to smaller farmers or women, the research system often produces or adapts technologies that increase agricultural input costs. It is more difficult for smaller farmers to make this investment, as they generally lack access to the credit or financing available to larger farmers.

Second, much of the work of the IARCs is deliberately focused on small farmers, and recognizes the need for "reduced input" technologies, but many technologies develop from the United States and other places where the relative factor prices favor the development of capital-intensive and land-extensive technologies. For this reason, agricultural research systems have tended to be more successful in reaching their targeted population. In

Jamaica, one study estimated that 87 percent of farmers are classified as "small farmers", so the research approach taken is obviously of great importance in this project.

Third, even when the technology itself if appropriate for women and small producers, the diffusion process itself favors larger farmers. The Carloni study has shown that is true in Jamaica as well. It is easier to find and work with larger farmers, who are often more enlightened. As a consequence, larger farmers adopt new technologies earlier. In the long run, in most cases, the adoption rates for appropriate technologies tend to be equally spread over social groups, but the "early adopters" tend to be the largest beneficiaries of the technology.

With this understanding of the process of research and diffusion there are specific mechanisms that may improve the chances of women benefiting from the project. Examples might be:

-- Examine what crops women tend to have greatest responsibility for, and at what level. The Carloni study noted, for example, that women tend not to be involved in yams, but are in some vegetable crop production. The choice of commodities may be influenced by this breakdown of the workforce. It may be, however, that other factors, particularly the overall macroeconomic analysis of returns to investment, should play the most important role here. If commodities that traditionally have had a limited role for women are chosen, thought should be given as to whether and how women might find it an advantage to produce these crops. This is important given the large numbers of women producers. The head of IICA in Jamaica estimated that in rural areas, women are the main wage earners in about half the households. If women cannot be brought into producing the chief commodities supported by the research system, the total potential project benefits (estimated through increases in production and productivity) will be much lower than anticipated.

-- Women's work seems to be related to the cropping cycle. Men seem to take the lead in planting and weeding, with some assistance from women. Women tend to have a more dominant role towards the end of the production cycle, in harvesting and marketing. Therefore, if those setting research priorities for a given commodity or commodity group wish to benefit women specifically, they should focus on technologies that will help in those parts of the production cycle where women work the most. (Surely this division of labor will vary by crop, farm size, labor availability, etc., and must be ascertained carefully during the process of deciding on priority projects to fund.)

-- Carloni's study points out that women are ignored or neglected in traditional extension programs in Jamaica. The diffusion plan envisioned in this program relies on "model farmers" teaching other farmers, and on considerable on-farm research. In this process, there are a number of potential linkages to women that can be established.

-- One is the selection of model farmers. Make half of them women, and in the evaluation see whether neighbor adoption (by both sexes) is better or worse depending on the sex of the farmer. Often there will be second stage adoption phase, when seed (or whatever technology) is distributed out from the model farmer to a select group of interested farmers to see whether the technology is adaptable to a wide variety of conditions (mixed systems of various types, farms of various sizes, agroclimatic conditions, etc.) Women should also make up half of this select group. It should be remembered that these farmers are in effect the only "diffusion agents" of the project. If women are not equal participants at this level, they will not be equal participants downstream when wider participation is hoped for.

-- It is trained researchers who will be undertaking and supervising the on-farm-research that is the focus of this project. This gets back to the question of hiring female researchers, who will be first "diffusers" of the research in the field. For this reason, heads of research teams should be encouraged to hire women whenever possible. Assuming that in the short run, it will not be possible for women to comprise half of the researchers, then a special short course for the researchers that will attune them to women's role in agriculture should be supported. This might include showing the importance of women in agriculture, their traditional and potential roles in increasing agricultural productivity, the particular problems that would be of research interest to them, the constraints under which they must operate in terms of other farm tasks, availability of credit, etc. Knowledge of and sensitivity to these issues might vastly improve researchers' willingness to seek out and work with women as well as men.

Annex H
Scopes of Work for TA

JOB DESCRIPTION FOR THE PROGRAM DIRECTOR

Responsibilities: The Program Director (PD) will have the overall development and administrative responsibility for the project and the research program. The PD will also administer and coordinate the technical assistance provided by the short term commodity specialists. He will establish the priorities for research and develop the policies governing the grants/contracts program. In these activities the PD will be guided by advice, recommendations and oversight of the RAC. However, the PD will have final authority and responsibility for the execution of the research program.

The PD will need to develop program priorities both in regard to commodity problem areas within commodities, and kinds of research to be carried out. Priorities will be established based on the needs of producers, national priorities, and economic opportunities. However, since agricultural research has a long lead time and difficult biological problems are seldom resolved quickly, priorities will not change drastically from year to year or the program may end up as "scatteration" with little discernible long term progress.

The PD will seek to incorporate and focus the efforts and resources of both the private and public sectors toward program goals, stimulating the private sector to play a complementary and supporting role and in some cases to carry out the development and transfer of the improved technology. The PD should also seek to broaden the support base of the project by soliciting the interest and participation of other donors.

The PD will establish direct working relationships with IARCs, regional research institutions and, where possible, develop cross-national linkages, recognizing that these external institutions are a rich source of technology and expertise. Lastly, the PD will help identify and train an heir apparent from amongst qualified Jamaican scientists to take over the Program Directorship by the end of the Project.

Qualifications: The PD should be an agricultural scientist, preferably a plants specialist with a Ph.D. degree or equivalent. He should have had several years of research experience in developing countries in both hands-on field research and in research administration and management. He should have established a good track record in both areas and achieved international recognition through his work and writings.

The PD must be a leader and demonstrate good judgement (gained through experience). He must also be strongly motivated and have the ability to convince and enthuse others. Along with these qualities he should have a strong empathy for his colleagues and assistants, and recognize the numerous problems of working under difficult circumstances.

The kind of experience and background needed by the Program Director would be gained from several years in international research with an IARC, a large university, a foundation, industry (eg. United Brands), or an appropriate public institution (USAID, Peace Corps, UNDP/FAO, World Bank). Perhaps the most useful experience would be that gained from several years of close association with an appropriate IARC, in part because of the need to be familiar with those centers which can be most helpful to Jamaica.

JOB DESCRIPTION FOR THE ASSISTANT PROGRAM DIRECTOR

Responsibilities: The Assistant Program Director (APD) will have similar duties as those of the Program Director and will act on the PD's behalf in the latter's absence. If possible, the APD would have training and experience in animal sciences so that the two persons will complement each other in carrying out the program and meeting its objectives. The actual allocation of responsibilities of the two directors would be worked out by the PD on a mutually satisfactory basis depending on the situation, interests and background of both persons.

One arrangement may be for the PD to give primary attention to overall direction and administration of the program; and to matters connected with the RAC, major donors and other key people. The APD would then assume major responsibility for liaison with principal investigators, developing new projects, and assessing progress in the field. However, the APD must also be familiar with program direction and operations so that he can assume the directorship responsibilities when needed.

Qualifications: The Assistant Program Director should be an agricultural scientist, preferably an animal scientist (if the PD is a crops specialist) with the Ph.D degree or equivalent. The APD should have had some experience in tropical developing countries with hands-on field research and in project management, and be widely recognized in his field as an effective and successful investigator.

The APD must have demonstrated leadership qualities, be strongly motivated, and possess the ability to get on well in the Jamaican system. Prior experience with an IARC, a university, a

foundation, agroindustry research, or public institution would be helpful. However, the extent of research managerial experience would not be as critical for the APD as for the Program Director. A Jamaican national with appropriate training and research experience would also be qualified for this position.

JOB DESCRIPTIONS FOR THE ADMINISTRATION/FINANCIAL ASSISTANT

Responsibilities: The terms of reference and responsibilities of this position must conform to USAID policies and procedures. However, it would also be desirable if the candidate has a rudimentary understanding of the problems of agriculture and biological research in tropical LDC's. Prior experience in Jamaica or similar situations would be useful for the Project. A qualified and experienced Jamaican would be acceptable for this position.

Annex I
Other Donor Activities

A number of studies and reviews have been undertaken during the past decade that address the subject of agricultural research in Jamaica. These include work done by FAO, IDB, IICA, MOA, and the University of Kentucky. The primary impression given by these documents is that over the years, agricultural research in Jamaica has become fragmented among a number of government and quasi-government institutions. In addition to the MOA and the statutory boards, other organizations engaged in agricultural research include CARDI, the Storage and Infestation Division of the Ministry of Industry and Commerce, UWI, Pioneer Hi-Bred Inc.., and Alcan Jamaica Ltd.. Minor roles in research are played by a number of external groups, including: HBCUs in collaboration with UWI (funded by AID research grants), University of Florida with the Coconut Authority (funded by an AID grant), INTSOY which is providing technical assistance to Jamaica Soya Products Industries, Ltd.., IICA which is working with the MOA on a small farming systems program (funded by IRDC), IITA which has placed a regional representative in Jamaica, FAO which has assisted in a number of small research related activities, the Dutch government which has assisted with rice research and production, land correlation and hydrology, and JADF which is funding a limited number of small research activities.

Among major donor funded activities, the IBRD funded Export Development Project is expected to provide for adaptive research through several of the export oriented commodity boards as well as for ornamental horticulture and vegetables. To date, the project is retarded because it is locked into the public budgetary ceiling.

The most recent major research project was the US$10.6 million IDB/GOJ Agricultural Research Project (1979-1983) with TA provided by MASI. The final report on the project indicates very marginal success, as measured by its influence on increasing actual research activities. The major constraints which prevented successful achievement of the project objectives are the same as those identified in other assessments of the research subsector.