WILLIAMS BROTHERS ENGINEERING COMPANY
A Resource Sciences Company

RESOURCE SCIENCES CENTER | 6600 S. YALE AVE. | TULSA, OKLAHOMA 74177
PHONE (918) 496-5020 | TELEX 49-7493 WBEC-TUL

PD-AAQ-774
ISN=34326

May 4, 1981

David L. Painter AID/NE/PD
Near East Project Development Rm 4716
Agency for International Development
320 21st Street N.W.
Washington, D.C. 20523

Subject: Requirements Contract No. AID/OTR-C-1629
PIO/T 263-026-3-90315
Work Order No. 6
Final Report

Dear Sir:

We are pleased to submit our Final Report on the subject work order covering Procurement and Technical Review for USAID Cairo, Egypt.

By copy of this letter we are transmitting ten (10) copies of our report directly to USAID Cairo per your instructions. Further, we are also sending Dunham-Bush recommended Operating Instructions and Spare Parts Lists to be forwarded to the appropriate importers.

Williams Brothers Engineering Company appreciate this assignment and hope this report meets your approval.

Very truly yours,

WILLIAMS BROTHERS ENGINEERING COMPANY

J. M. Brennan
Project Manager

JMB:agb

Encl.

FINAL REPORT

PROCUREMENT AND TECHNICAL REVIEW FOR USAID CAIRO, EGYPT

Volume I

prepared for

AGENCY FOR INTERNATIONAL DEVELOPMENT

REQUIREMENTS CONTRACT NO. AID/OTR-C-1629

May 1981

WILLIAMS BROTHERS ENGINEERING COMPANY

A Resource Sciences Company

RESOURCE SCIENCES CENTER • TULSA, OKLAHOMA 74177

CONTRACT NO. AID/OTR-C-1629

PIO/T NO. 263-026-3-90315

WBEC PROJECT NO. 4631

PROCUREMENT AND TECHNICAL REVIEW

FOR USAID CAIRO, EGYPT

TABLE OF CONTENTS

DESCRIPTION	TAB
Introduction	
- Report Objectives	
Badi El Hanafy Project	
- SER/COM #1; U.S. L/C #620851; BID L/C #20030	A
Mahmoud and Mosad El Malki Project	
- SER/COM #2; U.S. L/C #620843; BID L/C #20026	B
Co-Operative Association for Chicken Farmers Project	
- SER/COM #3; U.S. L/C #620915; BID L/C #20040	C
Kishk Project	
- SER/COM #4A; U.S. L/C #68966; DIB L/C #9527	D
Co-Operative Association for Chicken Farmers Project	
- SER/COM #4B; U.S. L/C #621113 DIB L/C #20095	E
Talaat Project	
- SER/COM #5; U.S. L/C #621125; DIB L/C #20101	F
Metanawy Project	
- SER/COM #6; U.S. L/C #620995; DIB L/C #20064	G
Mamoon Project	
- SER/COM #7; U.S. L/C #620839; DIB L/C #20024	H
Mamoon Project	
- SER/COM #8; U.S. L/C #621131; DIB L/C #20100	I
Conclusion	

INTRODUCTION

Williams Brothers Engineering Company has contracted with the Agency for International Development (AID) to provide an onsite equipment review and inspection of AID-financed projects in Cairo, Egypt. Projects financed by nine separate letter of credit loans are to be reviewed in this report. All nine projects are referenced by the following three numbers: SER/COM Number, a U.S.A. bank letter of credit (L/C) number, and a Development Industrial Bank (DIB) letter of credit (L/C) number.

The objectives of this report as outlined by the agency for International Development may be divided into five tasks.

Task #1 - "Equipment Identification" to determine a list of missing equipment.

Task #2 - "Equipment Value" to document any evidence of observed irregularities in the part of procurements. Since the equipment quantities and equipment deliveries were covered under Task #1 the major element of Task #2 is to compare the equipment market value wth the Invoice amount.

Task #3 - Recommend solutions to the procurement problems without recourse to Dunham-Bush and their Egyptian agent. Since major system components have been delivered to all project job sites by Dunham-Bush it is not our recommendation to change equipment manufacturers. This task is not referenced any further in the context of this report. The remaining procurement problems fall into two areas.

Task #4 - "Equipment Capabilities" this report task will establish existing equipment capabilities and make additional procurement recommendations for additional major equipment, if required.

Task #5 - "Service and Maintenance" procurement recommendations are made for service and maintenance including both parts and labor.

Each project report will be divided into four Sections, "Equipment Identification", "Equipment Value", "Equipment Capabilities", and "Service and Maintenance", in accordance with the above referenced project tasks. The procedure used to accomplish each of these tasks is described below.

EQUIPMENT IDENTIFICATION

Individual project equipment lists have been developed by Williams Brothers Engineering Company. It should be noted that all major equipment covered by this report was supplied by one manufacturer, Dunham-Bush International, West Hartford, Conn. The contractor's equipment list indicates all equipment, parts and accessories found to be on the project premises during a field inspection of each job site. Equipment nameplate information and physical dimensional data was used for equipment identification and verification. The contractor's equipment list has been itemized and compared to the list of equipment that was shipped according to Dunham-Bush's final invoice. Consistency of these two equipment lists has also been compared to three additional pieces of project documentation. The three documents are 1) the "Proforma Invoice" issued to the Egyptian bank in order to obtain financing approval, 2) the "Contract" as agreed to by the importer, Dunham-Bush and/or CAC or Coolair, and 3) the "Project Appraisal Report" developed by the Egyptian bank.

EQUIPMENT VALUE

This section of the report is to determine whether or not the invoices reflect reasonable pricing. Reasonable pricing shall be defined in this report as an amount which should

normally approximate the lowest competitive price for the item procured, quality, cost, time of delivery and other factors considered, as stated by AID Regulations.

Two methods may be used to establish equipment value. They are, competitive bids obtained by the importer and provided to DIB on the same project at the same time the Dunham-Bush bid was secured and secondly, the net sale value of the equipment supplied by Edward Matava and Tim Stillson of Dunham-Bush in Hartford, Connecticut.[1]

EQUIPMENT CAPABILITY

Equipment capability in relation to the expected performance criteria must be evaluated to determine if additional major equipment procurements are required. The performance criteria shall be established by two project documents: the Bank's Appraisal Report (DIB) and by the project contract. Interviews with the equipment importers, operators and maintenance personnel will be used as the basis to determine compliance with the expected performance criteria. Any operating conditions, affecting equipment capabilities, observed by the contractor will also be noted in this report section.

SERVICE AND MAINTENANCE

Parts and labor are necessary for start-up and continued successful operation at each plant facility. Each will be addressed separately in all nine reports.

PARTS

Parts may be considered by two classifications, major system components and maintenance or operational parts and supplies.

[1]Source: Information from Matava and Stillson was given to James J. Hastings, AID.

System components consist of parts such as rings or gaskets that would be required for a compressor overhaul. These parts should all be supplied by the equipment manufacturer to insure that the required tolerances and specifications are maintained. Development of this parts list must be done with the assistance of the manufacturer's representative to obtain part numbers relevant to each specific machine, pricing and delivery.

Maintenance parts and supplies consist of parts that are used in the normal operation of equipment. Items such as oil, freon, certain temperature controller or relays would be examples. These parts can depend largely upon the supply of parts available locally, the preventative maintenance program, and the ability of the operating engineer to perform maintenance or minor repairs. This parts list should be developed by both the operating engineer and information supplied by the equipment manufacturer.

The local representation of the equipment manufacturer may not provide the required cooperation with the equipment owner and operating engineer to develop the required parts lists and procurement. If this situation exists, then it is recommended that parts procurement be obtained from Dunham-Bush through an independent engineering company such as a contractor in the United States and exported directly to the end user.

LABOR

Labor may also be considered by the same two classifications as parts, major system component labor and maintenance labor.

Service work consisting of overhauling compressors, rewinding motors, or retubing a condensor should be done by factory trained service mechanics. These mechanics attend schools sponsored by the manufacturer and are normally only available through the service department of a qualified equipment manufacturer.

Maintenance or operational labor must be supplied locally. It is recommended that a log be maintained hourly during operation of large tonnage chillers. However, if the services of a full time operating engineer are not available, a part time operating engineer must be used to record and monitor equipment operation and maintain operational services such as cleaning debris from air cooled condensors or cleaning condensor tubes in a water cooled chiller.

CONTRACT NO. AID/OTR-C-1629
PIO/T NO. 263-026-3-90315
WBEC PROJECT NO. 4631
PROCUREMENT AND TECHNICAL REVIEW
FOR USAID CAIRO, EGYPT

This report section pertains to the following project:

Importer:	Badi El Hanafy
Order No:	EA 10038
L/C Bank:	Bank of America
U.S. Bank L/C No:	620851
L/C Amount:	$294,474.00 CIF
DIB L/C No.:	20030
SER/COM:	#1

EQUIPMENT IDENTIFICATION

The equipment and spare parts lists from the suppliers final invoice and the equipment list from the contractor's on-site inspection are itemized in tabular form.

Consistency of the two parts lists may be easily established. This form also indicates compliance with the proforma invoice, contract and bank appraisal report.

Equipment details, such as catalog and serial numbers are shown on the contractor's on-site Equipment Identification form following the Equipment and Spare Parts Lists.

EQUIPMENT LIST

CONTRACTOR ON-SITE INSPECTION	DUNHAM BUSH INVOICE # EA-10038	DOCUMENT VERIFICATION		
		PROFORMA INVOICE	CONTRACT LOCAL	D.I.B. APPR. REPORT
(2) IPCX-350-05-Q Water Brine Chillers w/300 H.P. 380/3/50 motor	Same as on site equipment	PCX-350-0 135 H.P.	Does not specify specific equipment	Same as on-site equipment
(6) HRU-2200-8 Heavy Duty Product Coolers	Same as on site equipment	AH-150	"	"
(2) Cent. Pumps 50 H.P. 6" E.B.11	(2) Cent. Pumps 25 H.P. 4" E.B.11	No reference	"	No reference

SPARE PARTS LIST

CONTRACTOR ON-SITE INSPECTION		DUNHAM-BUSH INVOICE #		PROFORMA Dated April 4, 1977 **
No reference		(1) X FRK 7 T 4	Seal Ass'y	Same as on Invoice
No reference		(1) X FRK 8 T 14	Gasket	
No reference		(1) HSG 138	Housing	Same as on Invoice (two references)
(1) RNG 138	Ring	(1) RNG 138	Ring	Same as on Invoice & On-site inspection
No reference		(1) GKT 390	Gasket	Same as on Invoice
No reference		(1) GKT 389	Gasket	Same as on Invoice
No reference		(1) GKT 388	Gasket	Same as on Invoice
(5) SEL 46 T 1	Seal	(5) SEL 46 T 1	Seal	Same as on Invoice & On-site inspection
(2) RNG 286	Ring	(2) RNG 286	Ring	Same as on Invoice & On-site inspection
(2) RNG 211	Ring	(1) RNG 211	Ring	Same as on Invoice
(2) RNG 209	Ring	(2) RNG 209	Ring	Same as on Invoice & On-site inspection
(2) RNG 210	Ring	(1) RNG 210	Ring	Same as on Invoice
(2) RNG 207	Ring	(1) RNG 207	Ring	Same as on Invoice
(2) RNG 166	Ring	(2) RNG 166	Ring	Same as on Invoice & On-site inspection
(2) RNG 256	Ring	(1) RNG 256	Ring	Same as on Invoice
(1) RNG 213	Ring	(1) RNG 213	Ring	Same as on Invoice & On-site inspection
(3) RNG 255	Ring	(1) RNG 255	Ring	Same as on Invoice
(2) RNG 131	Ring	(1) RNG 131	Ring	Same as on Invoice
(2) RNG 272	Ring	(1) RNG 275	Ring	Same as on Invoice
(1) VAL 488	Valve	(1) VAL 488	Valve	No reference
(1) COL 122 T 41	Coil	(1) COL 122 T 41	Coil	No reference
Box only w/ O-Rings		(1) X FRK 4 T 3	Oil Pump Ass'y	Oil pumps with motor, starter & breaker
(1) SRTD 3A3A 10	Starter	(1) SRTD 3A3A 10	Starter	No reference
Box only w/ O-Rings		(1) XFRK 27 T 13	Bearing Kit	No reference
(3) GKT 271	Gasket	No reference		No reference
(3) GKT 257-1	Gasket	No reference		No reference
(2) GKT 229-2	Gasket	No reference		No reference

** Spare parts were not itemized on the contract or the D.I.B. report.

SPARE PARTS LIST

CONTRACTOR ON-SITE INSPECTION	DUNHAM-BUSH INVOICE #EA-10038	PROFORMA Dated April 4, 1977 **
(2) GKT 380-1 Gasket	No reference	Set of gaskets indicated w/o part number
(1) GKT 238 Gasket	No reference	No reference
(2) SLV 53 D Sleeve	No reference	Same as on Contractor on-site inspection
(2) pair BRG-80 7-2 Bearing	No reference	Same as on Contractor on-site inspection
(5) H-100 Filter (supplied w/ Machine)	No reference	No reference
(1) BLT-89 Bolt	No reference	No reference
(4) RNG-164 Ring	No reference	No reference
(1) GKT-383 Gasket	No reference	No reference
(2) SHM-21T-11	No reference	No reference
(4) SHM-21T-12	No reference	No reference
(2) SHM-21T-13	No reference	No reference
(4) SHM-21T-14	No reference	No reference
(2) SHM-21T-15	No reference	No reference
(2) NUT 56 Nut	No reference	No reference
(1) SWT 71 Switch	No reference	No reference
(2) WAS 93 Washer	No reference	No reference
(1) PUP 88 A T 1 Pump	No reference	No reference

** Spare parts were not itemized on the contract or the D.I.B. appraisal report.

SPARE PARTS LIST

CONTRACTOR ON-SITE INSPECTION	DUNHAM-BUSH INVOICE #	PROFORMA Dated April 4, 1977 **
No reference	No reference	Journal Bearing BRG 70
No reference	No reference	Sleeve Bearing BRG 54
No reference	No reference	Housing Seal 25HM18
No reference	No reference	Unloader Solenoid Valve 12
No reference	No reference	Unloader Solenoid Coil 12

** Spare parts were not itemized on the contract or the D.I.B. appraisal report.

DATE 1-27-81

IMPORTER: Badi El Hanafy

DIB L/C# 20030

LOCATION: El Kaid Aiat Giza

U.S. L/C 620851

SERVICE: Cold Storage

AMOUNT USD $294,474

CONTRACTOR'S ON-SITE
EQUIPMENT IDENTIFICATION

CHILLER #1	TYPE Chiller	MODEL IPCX-350-0	SERIAL DPW-2015K78X2491
	Compressor	2015DLF1LODX-2491	78G-096D
	Compressor Motor	(FR) 1007TS Type P 300 H.P. 380/3/50	1MA482426-G1-T
	Condenser	X2491-03	Natl. Bd. 52339
	Oil Reservoir	SEP97W	Natl. Bd. 52340
	Evaporator	X2491-07	Natl. Bd. 52338

STATUS: Operational

REMARKS: Refrigerant charge is 540 lbs. of R-22

One chiller condensor has stainless steel tubes.

One chiller condensor has copper tubes.

SER/COM #1

DATE 1-27-81

IMPORTER: Badi El Hanafy

DIB L/C# 20030

LOCATION: El Kaid Aiat Giza

U.S. L/C 620851

SERVICE: Cold Storage

AMOUNT USD $294,474

CONTRACTOR'S ON-SITE
EQUIPMENT IDENTIFICATION

CHILLER #2	TYPE	Chiller	MODEL	1PCX350-05	SERIAL DPW2015K78X2486
		Compressor		2015DLE1LOD	78G-093D
		Compressor Motor	(FR)	447 TS 300 H.P. 380/3/50	1MA48247-G2-T
		Condenser		X 2486-03	Natl. Bd. 52560
		Oil Reservoir		SEP97W	Natl. Bd. 52588
		Evaporator		CHRX2486-07	Natl. Bd. 52559

STATUS: Operational, compressor was observed to have a leaking seal, motor shaft alignment should be checked and seal replaced.

REMARKS:

SER/COM #1

DATE 1-27-81

IMPORTER: Badi El Hahafy

DIB L/C# 20030

LOCATION: El Kaid Aiat Giza

U.S. L/C 620851

SERVICE: Cold Storage

AMOUNT USD $294,474

CONTRACTOR'S ON SITE
EQUIPMENT IDENTIFICATION

PUMP #1	TYPE Brine Pump	MODEL Cat. # 50HP-6-EB-14H144144-1	SERIAL 58737 420 GPM 160' HD	
	Pump Motor	(FR) 326T 230/440-3-60	1913 659 1770 RPM. 50 H.P.	
	Brine Pump	Cat.# 50HP-6-EB-14H14401	58736	
	Pump Motor	(FR) 326T 230/440-3-60	1913 653 1770 RPM. 50 H.P.	

STATUS: Operational

REMARKS: Pump H.P. is larger than indicated on final D & B Invoice.

DATE 1-27-81

IMPORTER: Badi El Hanafy

DIB L/C# 20030

LOCATION: El Kaid Aiat Giza

U.S. L/C 620851

SERVICE: Cold Storage

AMOUNT USD $294,474

EQUIPMENT IDENTIFICATION

AIR HANDLING UNITS #1,#2,#3, #4,#5,#6.	TYPE Air Handling Units	MODEL HRU 2200-8	SERIAL 78065143870651438
	Part #6-323409802		

STATUS: Operational

REMARKS: - Two of the six storage rooms had wall insulation adequate for meat storage, according to the importer. However, Air Handling Units (w/coils) are not equipped for frozen product storage. Specifically, there is no method of providing for coil defrosting.

- No method of individual room temperature control is provided.

EQUIPMENT VALUE

Equipment value will be considered in two parts. PART #1 will determine if the net sale value of the equipment as indicated by Mr. Matava and Mr. Stillson of Dunham-Bush appear to reflect reasonable pricing. Pricing consistency with competitive pricing quotations will also be considered. PART #2 will determine if the net sale price established in PART #1 is consistent with the final invoice. As stated by AID funding regulations the final invoice amount must reflect reasonable pricing.

PART #1

Competitive quotations were not obtainable on this specific project from the Egyptian Bank, D.I.B. Therefore, the contractor does not have specific competitive pricing information available on this project for evaluation. It is strongly recommended that competitive bids be obtained prior to issuing a letter of credit and kept on file by the lending institution. However, based on previous project experience the "NET SALE PRICE" indicated by Mr. Matava and Mr. Stillson appear to be reasonable.

It should be noted that some inconsistency does exist within the Dunham-Bush documents. Costs shown on the project production orders total $152,728.00 for the equipment. However, the contractor was unable to find accurate documentation for spare parts. As stated in the equipment identification section, parts found on the project were not the same as the parts itemized on the invoice. Also, the contractor could not identify many items on either parts list as being replacement spares that would fit the equipment on this project. Many parts did not appear on the price list or parts selection catalogs for this project.

A value of $1,891.39 for spare parts is itemized in a letter from Coolair to Dunham-Bush International dated 11-3-78. The contractor estimates the list price of parts appearing on the invoice to be approximately $10,000.00 If the "NET SALE VALUE" from Mr. Matava and Mr. Stillson includes equipment costs of $152,728.00 then an allowance of $8,984.30 is included for spare parts. Therefore, the "NET SALE VALUE" for equipment and spare parts of $161,712.30 F.O.B. Factory will therefore be considered reasonable.

PART #2

Consistency between the Invoice Amount and the "NET SALE VALUE" was established as follows:

Dunham-Bush Invoice No. EA 10038 (10-28-78)	$270,983.32
Dunham-Bush Invoice No. EA 10038 (4-4-79)	23,490.68
Total Invoice	$294,474.00
Less "NET SALE VALUE" of equipment and spare parts F.O.B. Factory	(161,712.30)
	$132,761.70

Therefore, $132,761.70 was retained for packaging, freight, insurance and additional profit. This dollar amount represents a mark-up of 82% of the "NET SALES VALUE". A mark-up of this magnitude appears to be a violation of the "Price Provisions" regulation for the use of AID funds. The regulation states, "No funds made available under this Act shall be used for the purchase in bulk of any commodities at prices higher than the market price prevailing in the United States at the time of purchase, adjusted for differences in the cost of transportation to destination, quality, and terms of payment."

It should also be noted that documentation supplied from Dunham-Bush (Sillcox Invoice 991700/S) indicated insulation, freon and refrigeration accessories totaling $89,111.21 were bought by C.A.C. Corporation for this project (Hanafy Refrigeration). These items were not listed on the invoice to Hanafy, these items were not found on the job-site location, and these items were not requested or delivered to the job-site according to the project importer Mr. Badi El Hanafy. Quantities of most items on the invoice are in excess of the requirements for one facility of this size. If these items were purchased for this project, the necessity, present location and the quantity of these items should be explained by C.A.C. Corporation.

EQUIPMENT CAPABILITY

The expected equipment performance capability is stated by two project documents: The Bank's Appraisal Report (D.I.B.) and by the project contract.

D.I.B. APPRAISAL REPORT - The Development Industrial Bank based their study on 5000 tons of produce cooled at a temperature between 1°C. and 5°C. The storage space required for 5000 tons of produce is stated to be 9 rooms with a volume of 10,000 M^3.

PROJECT CONTRACT - There are several contracts referencing this project. The latest dated June 28, 1977 states 3000 tons of produce storage is to be provided. An earlier contract dated April 6, 1977 refers to 5000 tons storage capacity. However, there is a third contract that calls for modifications to the April 19, 1977 contract, which also states a storage capacity of 3000 tons.

Due to the confusing documentation in regard to quantity of produce storage the contractor is forced to rely heavily on the importer's opinion of satisfactory equipment capability. The importer has six produce storage rooms and states that when all rooms are filled with produce one chiller will operate satisfactorily to cool the produce. The second machine may be used as a spare or stand-by unit at all times. Therefore, the contractor must conclude that the equipment capability is satisfactory for this installation and the expected performance criteria is being met without the need for purchase of additional major equipment.

SERVICE AND MAINTENANCE

As stated in the introduction both parts and labor are necessary for equipment operation and future maintenance.

PARTS - Parts will be considered by two classifications. Major system components and maintenance or operational parts and supplies.

**System components necessary for equipment overhaul or repair were listed by Dunham-Bush on the proforma invoice and the final customer invoice. These items are listed in the equipment identification section of this report. As indicated the two lists do not agree with each other and there are many discrepancies between either of these spare parts lists and the parts actually found on the project. Identification numbers given to each part are developed by the manufacturer. Since there is not a universal parts numbering system Dunham-Bush must be relied upon to provide parts identification information. Parts lists with the associated identification number are included at the end of this report

23

section. The IPCX-350 Chiller parts list is Exhibit A-1 and Centrifugal Pump Repair Parts Manual with identification numbers is Exhibit A-2.

**Maintenance parts and supplies consist of parts that are used in the normal operation of equipment. Obviously the quantity and type of parts to keep at the job site depends on the availability of parts from a local source. A list of maintenance parts has been developed by the operating engineer for this project, Mr. Salah Botros, and is attached at the end of the section (Exhibit A-3). Mr. Salah Botros is a former employee of the local Dunham-Bush agent and should have knowledge of the parts supply available in Cairo. A second list of recommended spare parts was prepared by the Dunham-Bush home office in Hartford, Connecticut. Items on the factory recommended spare parts lists are found in Exhibit A-1 and are preceeded by an asterisk.

Many items are duplicated on both lists. However, the list prepared by the operating engineer is considerably more extensive than the factory list. Final spare parts selection must be based on an economic decision considering factors such as probability of part failure vs. downtime expense to the importer. For this reason the following spare parts price lists are included:

PCX/DBX Consolidated Parts Price List	Exhibit A-4
PCX/DBX Hermatic Oil Pump Parts Price List	Exhibit A-5
Centrifugal Pump Repair Parts Price List	Exhibit A-6

According to the importer, both chillers are never required to operate at the same time, which leaves one for use as a stand-by. Therefore, for this installation the contractor would recommend the shorter, less expensive list of spare parts in Exhibit A-1.

LABOR - Labor may also be considered by the same two classifications as parts, major system component labor and maintenance labor.

**Service work for major overhauls or replacement of major system components was not found to be available locally. According to the regional sales office for Dunham-Bush, in Athens, start-up and major systems repair labor would be supplied from the United States.

**Maintenance or operational labor must be supplied locally. For this project the operating engineer is Salah Botros. He was interviewed by the contractor and the following information was determined. Mr. Botros has had previous experience in refrigeration service, including work experience on Dunham-Bush equipment with the local agent in Cairo. A regular operating log was not kept, however his knowledge of operating procedures appeared to be satisfactory. Minor repairs performed since system start-up included replacement of a relay and temperature controller. Mr. Botros was able to isolate and repair these problems and both chillers are now reported to be in good operational order. The contractor concludes that Mr. Botros should continue to provide good operating service especially if adequate regional support from Dunham-Bush may be established. The initial step toward proper operation and maintenance is obtaining and following the manufacturer's operating and maintenance manuals. The appropriate IPCX Chiller Operating and Maintenance Manual (Exhibit A-7) and the Centrifugal Pump Operating and Maintenance Manual (Exhibit A-8) are included at the conclusion of this report section.

25

SER/COM # 1 (Badi)
DUNHAM-BUSH LITERATURE
EXHIBIT INDEX

EQUIPMENT	REPLACEMENT PARTS LIST	PARTS PRICES	OPERATIONAL & MAINTENANCE MANUALS	RECOMMENDED SPARE PARTS LIST		
IPCX-350-05 Pkg. Brine Chiller	A-1	A-4 A-5	A-7	A-1		
HRU-2200-8 Product Coolers						
Model E.B. 11 Centrifugal Pumps	A-2	A-6	A-8			

Exhibit A-1

DESCRIPTION	D/B PART NO. STANDARD	D/B PART NO. ALTERNATE	
CONTROL BOX 60HZ			
* CONTROL CIRCUIT BREAKER (1CB)	BKR 75		1
* OIL HTR CIRCUIT BREAKER (2CB)	BKR 74		1
LIMIT RELAY (8CR)	RLY 135		1
* MASTER CONTROL RELAY (1CR)	RLY 126		1
* TRANSFER RELAY (2CR)	RLY 126		1
LOCK IN RELAY (4CR)	RLY 129		1
BLOCKING RELAY (6CR)	RLY 126		1
* COMPRESSOR CONTROL RELAY (3CR)	RLY 129		1
* ANTI-RECYCLE TIMER (1TR)	TMR 114		1
* OIL PRESS. FAILURE TIMER (2TR)	TMR 83		1
* OIL PUMP SHUT-DOWN TIMER (3TR)	TMR 83		1
* START-UP TIME DELAY TIMER (4TR)	TMR 83		1
ELAPSED TIME INDICATOR (6TR)	TMR 86		1
* TIMER - SEAL OIL TEMP T'STAT (12TR)	TMR 106		1
HI/LO PRESS. CONTROL (1PS)	CNT 175		1
LOW SUCTION PRESSURE PUMP-DOWN AND UNLOAD CONTROL (2PS)	CNT 167		1
OIL FAILURE CONTROL (3PS)	SWT 80		1
* TEMPERATURE LOAD CONTROL (TLC)	CNT 232T2		1
* TEMPERATURE CONTROL (8TAS, 12TAS, 13TAS)	CNT 231		3
CHILLED WATER THERMOSTAT (2TAS)	CNT 55		1
HOLDING RELAY (9CR)	RLY 135		1
ON/OFF SWITCH [redacted] (1SS)	SWT 82		1
* TIMER, UNLOADED START (7TR)	TMR 83		1
LAMP (RED, SAFETY SWITCHES, OIL FAILURE) (2LT, 3LT)	LMP 10		2
LAMP (AMBER, ANTI-RECYCLE TIMER, START UP DELAY) (4LT, 5LT)	LMP 11		2
LAMP (RED, POWER ON) (1LT)	LMP 10		1
TRANSFORMER (24V SEC) (2T)	TSF 26		1
PUMP STARTER AUX CONTACT (AUX)	SWT 71		1
OIL PUMP STARTER (1M)	SRTD3A3A10		1
SUCTION PRESSURE GAGE	GAG 40		1
DISCHARGE, OIL PRESSURE GAGES	GAG 41		2
OIL TEMP GAUGE	GAG 46		1

1 YEAR PARTS

DUNHAM-BUSH, INC.
WEST HARTFORD DIVISION

PART NAME REPLACEMENT PARTS LIST FOR IPCX 350-0 PKG CHILLERS

ENGINEERING FILE NO. X2486

SCALE	DRAWN BY	CHECKED	
—	NAME JAS	NAME	UNLESS OTHERWISE SPECIFIED TOLERANCES: FRACTIONAL DIMENSIONS ± DECIMAL DIMENSIONS ± ANGLES ±
	DATE 9-[illegible]-73	DATE 12-1-73	PG 1 OF 3

SUPERSEDES

DESCRIPTION	D/B PART NO. STANDARD	D/B PART NO. ALTERNATE	QTY.
COMPRESSOR ASSEMBLY	2015DLFILOD		
SUCTION GASKET (5")	GKT 314		1
DISCHARGE GASKET (4")	GKT 257		3
INDICATOR ASSEMBLY (SLIDE VALVE)	IDR 57A		1
MOTOR COUPLING	CPL 172		1
SEAL ASSY KIT	XFRK 7T4		1
CHILLER ASSEMBLY	X2486-07		
SUCTION HEAD FILTER	FLR 48A		1
FLOW SWITCH	SWT 119		1
CHILLER RELIEF VALVE	VAL 735 T1		1
PILOT EXPANSION VALVE	VAL 519		2
EXPANSION VALVE WITH COIL (LARGE) 100141	VAL 494		1
EXPANSION VALVE W/ COIL (SMALL) 50141	VAL 539		1
CHILLER INLET HEAD GASKET	GKT 350T5		2
CHILLER INLET HEAD RING	RNG 217T5		1
CHILLER OUTLET HEAD GASKET	RNG 170		1
SIGHT GLASS (MOISTURE INDICATOR)	0817G10		1
FILTER DRIER GASKET	GKT 334		1
FILTER DRIER BLOCK	BLK 41		5
TEMPERATURE SENSOR CONTROL	CNT 233T5		1
CHILLER DISCHARGE GASKET	GKT 229		1
SEAL OIL COOLER ASSEMBLY	SOC1AT2		1
* SOLENOID VALVE COIL	COL 122T1		1
* TEMPERATURE PILOT VALVE	VAL 833		1
CHECK VALVE	VAL 388		1
SOLENOID VALVE/LESS COIL	VAL 488		1
LIQUID INJECTION ASSEMBLY	INJ 3AT4		1
* EXPANSION VALVE	VAL 691T4		1
* SOLENOID VALVE COIL	COL 123T1		1
SOLENOID VALVE/LESS COIL	VAL 902T1		1
HOT GAS CAP. CONTROL	OPT 25T3		
VALVE - SOLENOID	VAL 902T5		1
COIL - SOLENOID	COL 126T1		1
UNLOAD START	OPT 24T2		
VALVE - SOLENOID	VAL 902T2		1
COIL - SOLENOID	COL 126T1		1

DUNHAM-BUSH, INC.
WEST HARTFORD DIVISION

PART NAME REPLACEMENT PARTS LIST FOR IPCX 350-0 PKG CHILLERS

ENGINEERING FILE NO. X-2486

SCALE	DRAWN BY	CHECKED	UNLESS OTHERWISE SPECIFIED TOLERANCE
—	NAME RC	NAME	FRACTIONAL DIMENSIONS ±
	DATE 3-20-78	DATE	DECIMAL DIMENSIONS ±
			GLES ±

SUPERSEDES AS-RPL 39

DESCRIPTION	D/B PART NO. STANDARD	D/B PART NO. ALTERNATE	QTY
CONDENSER ASSEMBLY	X2486-03		
CONDENSER RELIEF VALVE	VAL 735T2		2
INLET HEAD GASKET	GKT 243		1
RETURN HEAD GASKET	GKT 242		1
REFRIGERANT OULET GASKET	GKT 60		2
			1
OIL SUMP ASSEMBLY	SEP 97W		
RELIEF VALVE	VAL 735T3		2
RELIEF VALVE GASKET	GA 430		3
* OIL SUMP HEATER	HTR 71		2
* OIL PUMP ASSEMBLY	X2486-23		1
OIL PUMP RELIEF VALVE	VAL 720		1
OIL PUMP STRAINER	SRA 73T2		1
OIL LINE CHECK VALVE	VAL 753		1
OIL SUMP LEVEL SIGHT GLASS	GLS 16A		
GLASS	GA210		2
RETAINING NUT	GA 211		2
BACK-UP RING	GA 212		2
GASKET	GKT 517		4
SUMP INLET GASKET	GKT 257		1
SUMP DISCHARGE GASKET	GKT 257		1
SUMP DISCHARGE CHECK VALVE GASKET	GKT 250		2
SUMP DISCHARGE CHECK VALVE	VAL 727		1
OIL FILTER ASSEMBLY	FLR 110AT3		
OIL FILTER O'RING	RNG 294 T1		2
FILTER ELEMENT	FLR 125		3
FILTER ALARM O'RINGS	RNG 238		2
OIL LINE GASKET (2 BOLT FLG)	GKT 340		4
ACCESSORIES			
OIL	OIL 3		40 GAL
UNLOAD SOLENOID VALVE ASSEMBLY	VAL 509A		
* 24 VOLT COIL	COL 122T41		2
* 115 VOLT COIL	COL 122T40		1
SOLENOID VALVE/LESS COIL	VAL 488		3
METERING VALVE	VAL 547		3

This drawing contains designs and other information which are the property of DURHAM-BUSH. This drawing may not, in whole or in part, be duplicated or disclosed or used for manufacture of part disclosed herein, without the prior written permission of DURHAM-BUSH, INC.

DURHAM-BUSH, INC.
WEST HARTFORD CONN 06110 USA
one of the Signal Companies
WEST HARTFORD DIVISION

PART NAME: REPLACEMENT PARTS LIST FOR IPCX 350-0 PKG CHILLERS

MAT'L: ENGINEERING FILE NO. X-2486

SCALE	DRAWN BY	CHECKED	UNLESS OTHERWISE SPECIFIED TOLERANCE
	NAME RC	NAME	FRACTIONAL DIMENSIONS ±
	DATE 3-20-78	DATE	DECIMAL DIMENSIONS ±
			ANGLES ±

SUPERSEDES

A5-RPL39

Exhibit A-2

FORM NO. 2507B
OCTOBER 1978
Supersedes 2507A

DUNHAM-BUSH

BASE MOUNTED CENTRIFUGAL PUMP REPAIR PARTS MANUAL

IMPORTANT

1. For terms of sale refer to latest revision of Form 1278.
2. Minimum order $25.00 Net.
3. For prices consult Form 17448-1.
4. Claims — In the event of loss or damage in transit, The Sales Outlet should immediately place a claim against the delivering transportation company. Dunham-Bush, Inc. cannot assume responsibility for such items when damage or loss is incurred during transit.

DUNHAM-BUSH, INC. • Marshalltown, Iowa 50158, U.S.A.

INDEX

HOW TO ORDER 2
TYPICAL NAMEPLATES 3
B9 AND AB9 MODEL IDENTIFICATION AND IMPELLER DIAMETERS 4
MOTOR AND COUPLING DATA 5
B9 AND AB9 TYPICAL CUTAWAY DRAWING 6
B9 AND AB9 PARTS LIST 7
DB11 AND DB14 TYPICAL CUTAWAY DRAWING 8
DB11 AND DB14 PARTS LIST 9
DS11 AND DS14 BEARING SLEEVE ASSEMBLY – CUTAWAY DRAWING 10
DS11 AND DS14 SLEEVE BEARING ASSEMBLY PARTS LIST 11
EB11, ES11, EB14 AND ES14 TYPICAL CUTAWAY DRAWING 12
EB11, ES11, EB14 AND ES14 PARTS LIST 13
FB11 TYPICAL CUTAWAY DRAWING 14
FB11 PARTS LIST 15
BEARING ASSEMBLYS
BALL BEARING ASSEMBLY – CUTAWAY DRAWING AND PARTS LIST 16
B9 AND AB9 PUMP
BALL BEARING ASSEMBLY – CUTAWAY DRAWING AND PARTS LIST 17
DB11 AND DB 14 REPLACEMENT
EB11, EB14 AND FB11 PUMPS
SLEEVE BEARING ASSEMBLY – CUTAWAY DRAWING AND PARTS LIST 18
DS11 AND DS14 REPLACEMENT
ES11 AND ES14 PUMP
P–NUMBER INDEX 19

AVAILABLE REPAIR PARTS ARE LISTED ON THE FOLLOWING PAGES. TYPICAL CUTAWAY DRAWINGS OF EACH TYPE OF PUMP OR BEARING ASSEMBLY SHOW REFERENCE NUMBERS TO THE AVAILABLE PARTS. THESE REFERENCE NUMBERS LOCATE THE PART NAME AND PART NUMBER IN THE REPAIR PARTS LIST FOR EACH TYPE, MODEL AND SIZE OF PUMP. REFERENCE NUMBERS WITH A LETTER SUFFIX ARE SUB ASSEMBLY OR KIT PARTS AND CAN ONLY BE ORDERED SEPARATELY WHEN A PART NUMBER IS GIVEN FOR THE SUBASSEMBLY ITEM.

HOW TO ORDER

1. ALWAYS GIVE THE SERIAL NUMBER, MODEL, AND SIZE OF PUMP (SEE PAGE 3).
2. GIVE THE PART NUMBER, PART NAME AND REFERENCE NUMBER OF EACH ITEM.
3. READ THE NOTES ON THE INDIVIDUAL REPAIR PARTS PAGES.
4. PRICING FOR SPECIAL ITEMS OR PARTS FOR NON-STANDARD PUMPS – CONSULT MARSHALLTOWN, IOWA FACTORY.

TYPICAL NAME PLATES

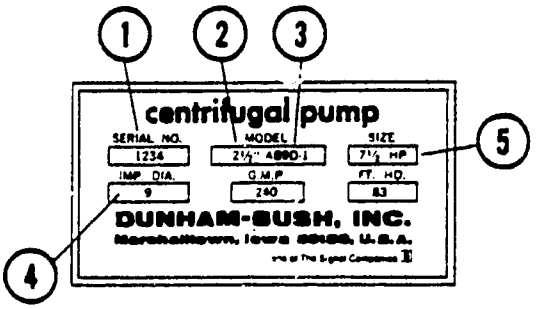

TYPICAL NAMEPLATE OF B9 OR AB9 STANDARD CATALOG PUMPS.

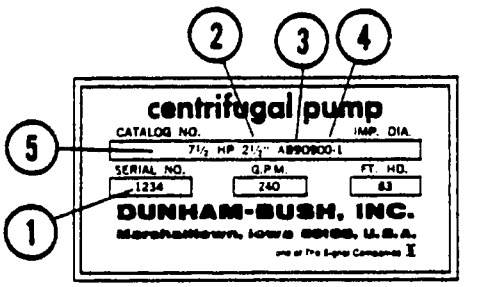

TYPICAL NAMEPLATE OF ALL D PUMPS, E PUMPS, F PUMPS AND NON STANDARD AB9 AND B9 PUMPS.

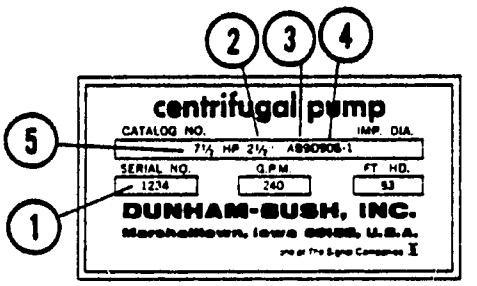

TYPICAL NAMEPLATE OF ALL PUMPS FABRICATED AFTER JULY 1972 (Approx.)

INCLUDE THE FOLLOWING WHEN ORDERING REPAIR PARTS

		SAMPLE
1.	SERIAL NUMBER	1234
2.	DISCHARGE SIZE	2-1/2"
3.	MODEL	AB9D-1
4.	IMPELLER DIA.	9" (FIRST SAMPLE)
		9.00" (SECOND SAMPLE)
		90S (THIRD SAMPLE) SEE NOTE 2
		107 (NOT SHOWN) SEE NOTES 2 AND 3
5.	MOTOR DATA – HP	7-1/2 HP
	– ELECTRICAL *	VOLTS/PHASE/CYCLE
	– FRAME SIZE *	FROM MOTOR NAMEPLATE
	– SERIAL NO. *	FROM MOTOR NAMEPLATE

* REQUIRED ONLY WHEN ORDERING A REPLACEMENT MOTOR.

NOTE: 1. IF THE CATALOG NUMBER HAS A (T) OR (U) AS PART OF THE MODEL NUMBER (EXAMPLE 7-1/2 HP 2-1/2" AB9TD-1) THE (T) OR (U) STANDS FOR A T FRAME MOTOR OR U FRAME MOTOR. IF NOT LISTED THIS INFORMATION IS PART OF THE MOTOR FRAME SIZE ON THE MOTOR NAMEPLATE.

2. IMPELLER DIAMETERS ON THIRD NAMEPLATE SAMPLE ARE CODED PER THE FOLLOWING CODE:

FIRST NUMBER ..... WHOLE INCH DIAMETER
SECOND NUMBER ..... FRACTIONAL INCH IN 1/8" INTERVALS
1 = 1/8"
2 = 1/4"
3 = 3/8" etc.
LETTER ..... PRESENCE OF THE LETTER S INDICATES A CATALOG TRIM IMPELLER. ABSENCE INDICATES A SPECIAL IMPELLER TRIM.

3. FOR 3 DIGIT NUMBERS THE FIRST TWO NUMBERS WOULD BE THE WHOLE INCH DIAMETER. THIS WILL OCCUR ONLY ON IMPELLER DIAMETERS 10 INCHES AND LARGER.
EXAMPLE 107 WOULD BE A 10-7/8" DIAMETER IMPELLER.

B9 AND AB9 MODEL IDENTIFICATION AND IMPELLER DIAMETERS

TABLE 1 FOR FOUR DIGIT SERIAL NUMBERS BELOW 7207

STANDARD AB9 PUMP MODELS	
MODEL NUMBER	IMPELLER DIAMETER
3/4 HP 1" AB9C-1	6-3/4
3/4 HP 1-1/4" AB9D-1	4-15/16
3/4 HP 2" AB9-D-1	4-15/16
1 HP 1" AB9C-1	7-5/16"
1 HP 1-1/4" AB9D-1	5-15/32"
1 HP 2" AB9D-1	5-3/8"
1-1/2 HP 1" AB9C-1	8-7/16"
1-1/2 HP 1-1/4" AB9D-1	6-3/8"
1-1/2 HP 2" AB9D-1	5-29/32"
1-1/2 HP 2-1/2" AB9D-1	5-21/32"
2 HP 1" AB9C-1	9"
2 HP 1-1/4" AB9D-1	7-3/16"
2 HP 2" AB9D-1	6-1/2"
2 HP 2-1/2" AB9D-1	6-1/8"
3 HP 1" AB9D-1	9"
3 HP 1-1/4" AB9D-1	8-1/4"
3 HP 2" AB9D-1	7-1/16"
3 HP 2-1/2" AB9D-1	6-3/4"
5 HP 1-1/4" AB9D-1	9"
5 HP 2" AB9D-1	8-7/16"
5 HP 2-1/2" AB9D-1	7-15/16"
7-1/2 HP 2" AB9D-1	9"
7-1/2 HP 2-1/2" AB9D-1	9"
10 HP 2-1/2" AB9D-1	9"

STANDARD B9 PUMP MODELS				
MODEL NUMBER	MOTOR HP	MODEL IDENTIFICATION CODE		IMPELLER DIAMETER
B9-1	1	2-1/2"	B9E-1	5-1/16"
B9-2	1-1/2	2-1/2"	B9E-1	5-11/16"
B9-3	2	2-1/2"	B9E-1	6-1/8"
B9-4	3	2-1/2"	B9C-1	6-9/16"
B9-5	3	2-1/2"	B9E-1	7-1/8"
B9-6	5	2-1/2"	B9E-1	7-7/8"
B9-7	5	4"	B9C-1	6-5/8"
B9-8	7-1/2"	3"	B9C-1	8-3/8"
B9-9	7-1/2	4"	B9C-1	7-1/4"
B9-10	10	3"	B9C-1	8-3/16"
B9-11	10	4"	B9C-1	7-3/4"
B9-12	10	3"	B9C-1	9"
B9-13	15	4"	B9C-1	8-5/8"
B9-14	20	4"	B9C-1	9"

NOTE: UNITS WITH 4 DIGIT SERIAL NUMBERS BETWEEN 6907 AND 7207 MAY HAVE A "U" OR "T" ADDED TO THE MODEL NUMBER, THIS SPECIFIES U-FRAME OR T-FRAME MOTORS. PRIOR TO 6907 ALL MOTORS ON STANDARD PUMPS WERE U-FRAME.

UNITS WITH 4 DIGIT SERIAL NUMBERS OF 7207 OR LARGER INCLUDE THE IMPELLER DIAMETER IN THE MODEL NUMBER. TYPICAL EXAMPLES ARE:

7-1/2 HP 2-1/2" AB9D90S-1

9 INCHES AND 0 EIGHTS INCHES FOR 9" DIAMETER
S MEANS CATALOGED TRIM

40 HP 6" EB14L-103-1

10 INCHES AND 3/8 INCHES FOR 10-3/8" DIAMETER

FOR UNITS WITH 5 DIGIT SERIAL NUMBERS CONSULT FACTORY FOR REPAIR PARTS INFORMATION. THESE ARE SPECIAL PUMPS AND MAY REQUIRE SPECIAL PARTS.

TABLE 2 MOTOR AND COUPLING DATA

MOTOR DATA									COUPLING DATA			
			T – FRAME MOTORS			U FRAME MOTORS			AB9 and B9(7/8" Pump Shaft)		E11/14 and F11 (1-3/8" Pump Shaft)	
MOTOR HP	FRAME SIZE	SHAFT DIA.	115/230-1-60	200-3-60	230/460-3-60	FRAME SIZE	SHAFT DIA.		SIZE	PART NUMBER X (Specify Motor Shaft)	SIZE	PART NUMBER x(Specify Motor Shaft. Dia.
3/4 HP	56	5/8"	2911	2869	2875	56	5/8"	CONSULT FACTORY FOR REPLACEMENT	3J	* ML 7384 x		
1 HP	143T	7/8"	2912	2705	2698	182	7/8"		4J	** ML 7385 x		
1-1/2 HP	145T	7/8"	2913	2706	2699	184	7/8"		4J	** ML7385 x		
—	—	—	—			213	1-1/8"		4J	ML 7386 x		
2 HP 3Ø	145T	7/8"		2713	2718	184	7/8"		4J	** ML 7385 x		
—	—	—	—			215	1-1/8"		5J	ML 7386 x		
3 HP 3Ø	182T	1-1/8"		2714	2719	213	1-1/8"		5J	ML 7386 x		
5 HP	184T	1-1/8"		2715	2720	215	1-1/8"		6J	ML 7411 x		
7-1/2 HP	213T	1-3/8"		2716	2721	254U	1-3/8"		6J	ML 7387 x		
10 HP	215T	1-3/8"		2654	2653	256U	1-3/8"		7J	ML 7412 x	No. 7	ML 7830 x
15 HP	254T	1-5/8"		2752	2663	284U	1-5/8"		8J	ML 7389 x	No. 8	ML 7831 x
20 HP	256T	1-5/8"		2753	2664	286U	1-5/8"		8J	ML 7389 x	No. 8	ML 7831 x
25 HP	284TS	1-5/8"		2754	2665	324US	1-5/8"				No. 9	ML 7832 x
30 HP	286TS	1-5/8"		2755	2666	326US	1-5/8"				No. 9	ML 7832 x
40 HP	324TS	1-7/8"		2756	2667	364US	1-7/8"				No. 10	ML 7833 x
50 HP	326TS	1-7/8"		2757	2668	365US	1-7/8"				No. 10	ML 7833 x
60 HP	364TS	1-7/8"		2758	2669	404US	2-1/8"				No. 11SF	ML 7834 x
75 HP	365TS	1-7/8"		2759	2670	405US	2-1/8"				No. 12E	ML 7835 x
100 HP	404TS	2-1/8"		2760	2671	444US	2-1/8"				No. 12E	ML 7835 x
125 HP	405TS	2-1/8"			3107						No. 12E	ML 7835 x
150 HP	444TS	2-3/8"			3108						No. 12E	ML 7836 x

*Use ML 7958 when replacing strap type.
**Use ML 8117 when replacing strap type.

TABLE 3 COUPLING PARTS

WOODS TYPE SLEEVE	
SIZE	PART NO.
3J	3099
4J	3077
5J	3081
6J	3086
7J	3090
8J	3102
No. 7	3113
No. 8	3114
No. 9	3115
No. 10	3116
No. 11SF	3117
No. 12E	3118

DUNHAM-BUSH STRAP COUPLING – NOT AVAILABLE

B9 AND AB9 PUMP

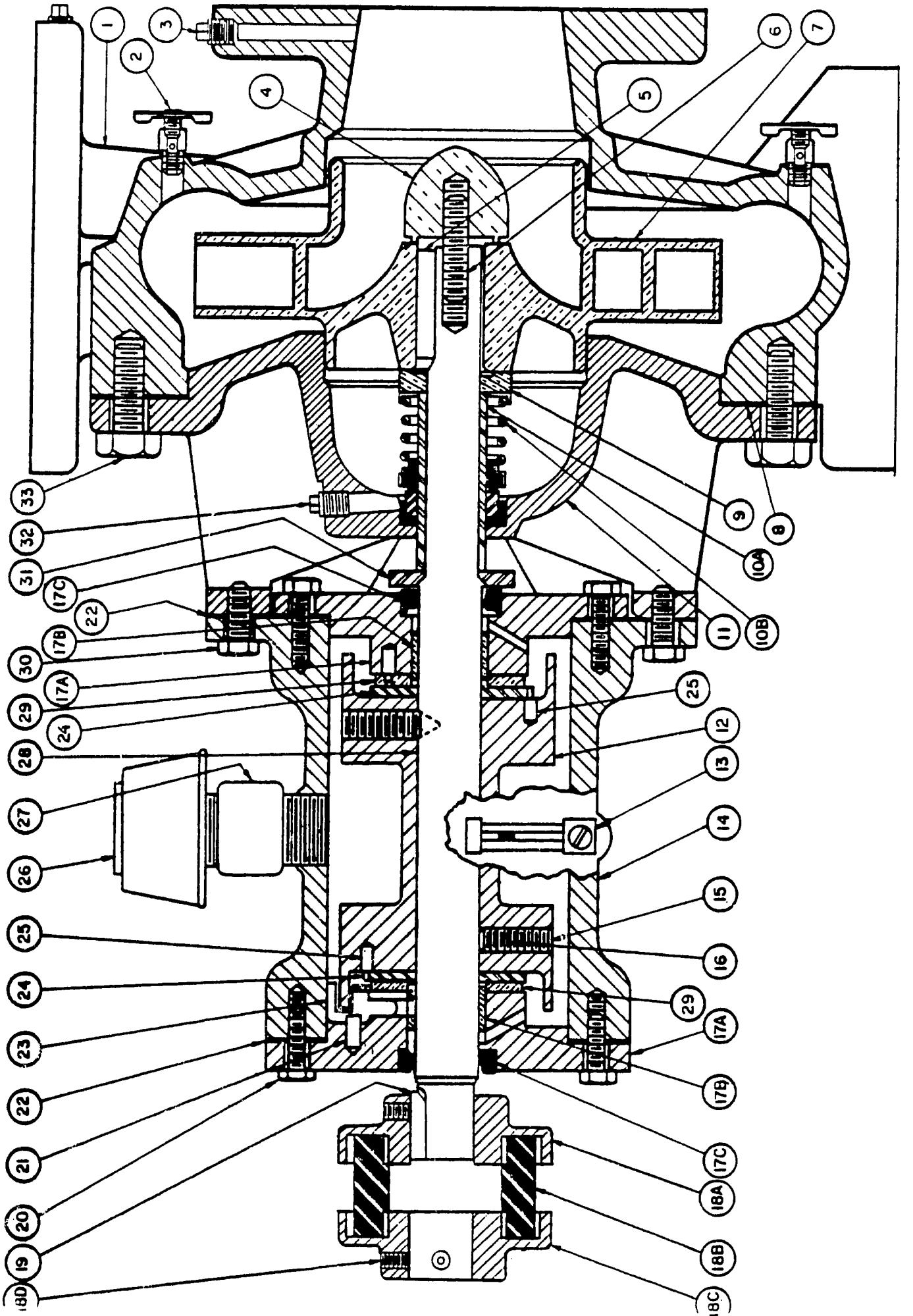

B9 AND AB9 PARTS LIST

ITEM	PART NAME	QUAN-TITY	1"AB9C PUMPS	1"AB9D PUMPS	1¼"AB9D PUMPS	2"AB9D PUMPS	2½"AB9D PUMPS	2½"B9C PUMPS	2½"B9E PUMPS	3"B9C PUMPS	4"B9C PUMPS
1	CASE (C.I.)	1	D2-717		D2-716	D2-715	D2-714	D2-49		D2-50	D2-64
	CASE (BRONZE)		D2-722		D2-723	D2-724	D2-725				
2	DRAIN COCK	2	P-9								
3	PLUG	2	P-2								
4	IMPELLER NUT	1	C6938								
5	IMPELLER KEY	1	C10025								
6	IMPELLER STUD	1	C10035								
7	IMPELLER	1	C2-73	E6141	E6181	E6188	E6204	C2-145	C2-322	C2-180	C2-178
8	CASE GASKET	1	D5450					C2-261		D5450	
9	SPACER	1	C10060								
10	SEAL REPLACEMENT KIT	1	ML7825								
10A	SLEEVE	1	C10062 (Part of Seal Replacement Kit)								
10B	SEAL	1	Spec 860 (Part of Seal Replacement Kit)								
11	HEAD (CAST IRON)	1	D2-764					D2-84		D2-70	
	HEAD (BRONZE)		D2-765								
12	ROTOR	1	B2-188								
13	OIL GAGE	1	Spec 938								
14	BEARING HOUSING	1	C2-176								
15	LOCKING SCREW	2	P-137								
16	SET SCREW	2	P-139								
17	BEARING FLANGE	2	B2-2616								
17A	FLANGE	1	Intergal Part of Bearing Flange B2-121								
17B	BUSHING	1	Intergal Part of Bearing Flange B2-121								
17C	OIL SEAL	1	Integal Part of Bearing Flange B2-121								
18	COUPLING COMPLETE	1	See Table 2								
18A	PUMP FLANGE	1	See Table 2								
18B	SLEEVE	1	See Table 2								
18C	MOTOR FLANGE	1	See Table 2								
18D	SET SCREW	4	Part of Flange								
19	PUMP KEY	1	C6804								
20	SCREW	16	P-130								
21	BEARING STOP PIN	2	A2-89								
22	FLANGE GASKET	3	A2-88								
23	BEARING STOP (WIPER)	2	A2-90								
24	THRUST WASHER	2	A2-134								
25	DRIVE PIN	4	A2-135								
26	DEMISTER	1	Spec 2679								
27	EXTENSION	1	P-164								
28	PUMP SHAFT	1	B2-108								
29	STATIONARY THRUST WASHER	2	A2-148								
30	SCREW	4	P-142								
31	SLINGER	1	A2-91								
32	PLUG	2	P-5								
33	SCREW	12	P-150								

NOTE:

FOR IMPELLER DIAMETERS SEE PAGE 4
FOR MOTOR AND COUPLING DATA SEE PAGE 5
SLEEVE BEARING ASSEMBLY COMPLETE IS PART NO. C2-181.
BALL BEARING ASSEMBLY COMPLETE IS PART NO. B2-2111.
12 OZ. CAN OF BEARING OIL IS PART ML 5132
CONSULT FACTORY FOR BASE, COUPLING GUARD, SPACER AND OTHER SIMILAR PARTS DATA.

SEE PAGE 6 FOR CUTAWAY SECTION.

DB11 AND DB14 PUMP

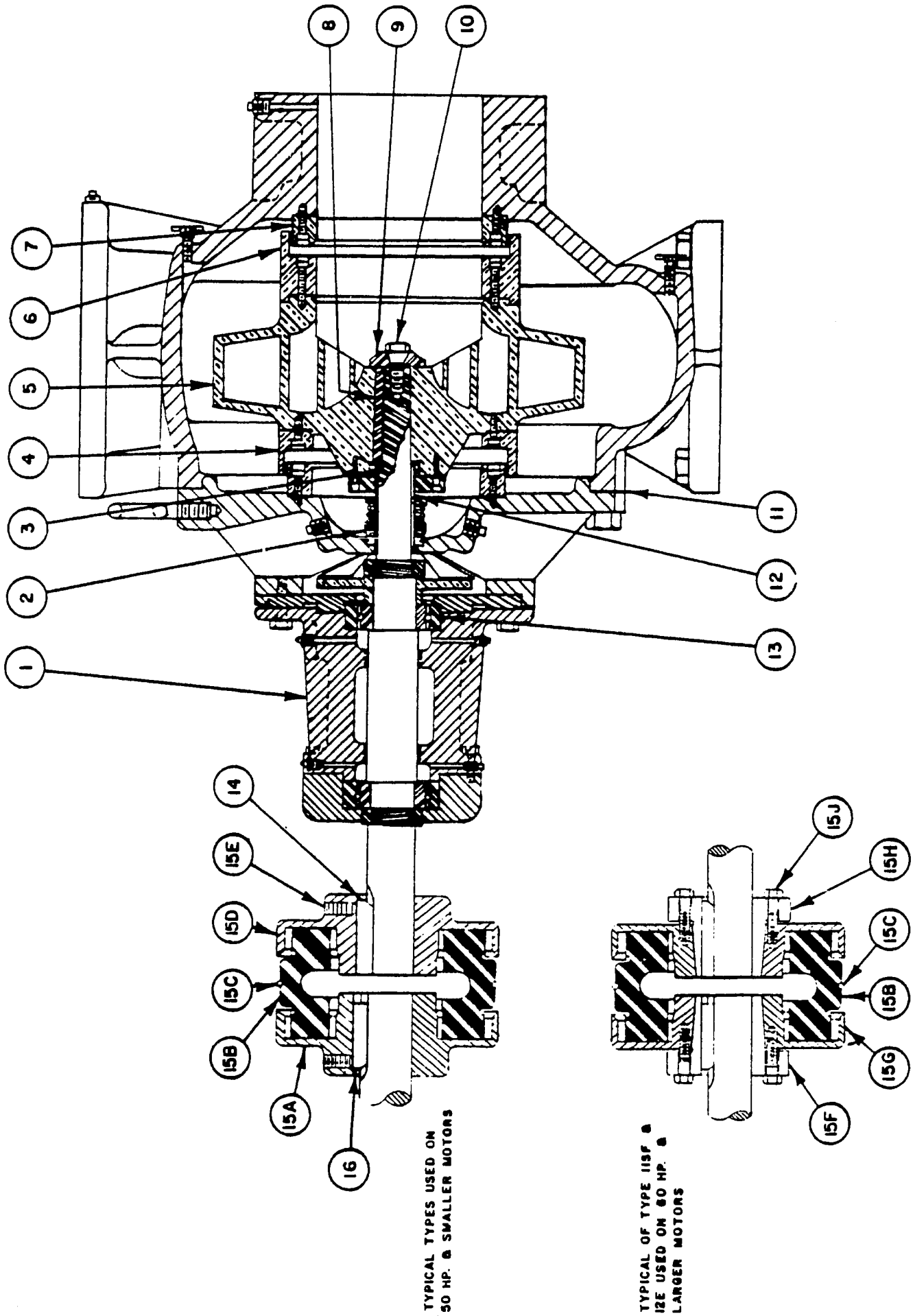

DB11/DB14 PARTS LIST

(ALSO DS11/DS14 EXCEPT FOR BEARING ASSEMBLY)

ITEM	PART NAME	QUANTITY	PART NUMBER	
			5"D11	5" D14
1	BALL BEARING ASSEMBLY COMPLETE	1	D2-C1162	
	SLEEVE BEARING ASSEMBLY COMPLETE		D2-C1160	
2	SEAL	1	2420	
3	O–RING	1	2583	
4	IMPELLER WEAR RING (REAR)	1	B2-1031	
5	IMPELLER	1	D2-761	
6	IMPELLER WEAR RING (FRONT)	1	B2-1359	
7	HEAD AND CASE WEAR RING	2	B2-754	
8	IMPELLER KEY	1	A2-1391	
9	IMPELLER CAP	1	A2-609	
10	IMPELLER SCREW	1	A2-1632	
11	HEAD GASKET	1	C2-903	C2-678
12	SLEEVE	1	A2-1975	
13	BALL BEARING	2	2462 thru 40 HP Drive, 2463 for 50 HP Drive and Larger	
14	PUMP KEY	1	A2-1392	
15	COMPLETE COUPLING	1	See Table 2	
15A	MOTOR FLANGE	1	(Part of Type S Coupling Complete)	
15B	SLEEVE	1	See Table 3 – All Sizes	
15C	RING	1	Part of Sleeve	
15D	PUMP FLANGE	1	(Part of Type S Coupling Complete)	
15E	SET SCREW	4	(Part of Type S Coupling Complete)	
15F	MOTOR BUSHING	1	(Part of Type SF or E Coupling Complete)	
15G	FLANGE	2	(Part of Type SF or E Coupling Complete)	
15H	PUMP BUSHING	1	(Part of Type SF or E Coupling Complete)	
15I	SCREW – BSSHING	Vaires	(Part of Type SF or E Coupling Complete)	
16	MOTOR KEY	1	Supplied with motor	

FOR MAJOR REPAIR OF THE ORIGINAL BEARING ASSEMBLY REPLACE WITH NEW STYLE ASSEMBLY AS LISTED ABOVE.

FOR MINOR REPAIR OF SLEEVE BEARING ASSEMBLY SEE PAGE 11 FOR AVAILABLE PARTS.

PARTS LISTED ABOVE ARE THOSE MOST SUBJECT TO WEAR AND ARE NORMALLY INVENTORIED.
PARTS NOT LISTED ARE NORMALLY NOT SUBJECT TO FAILURE AND ARE NOT KEPT IN INVENTORY.
CONSULT THE FACTORY FOR POSSIBLE AVAILABILITY AND PRICES.
1 QT. BEARING OIL IS PART NO. ML 7250.

SEE DRAWING PAGE 8 FOR CUTAWAY SECTION

DS11/DS14 SLEEVE BEARING ASSEMBLY

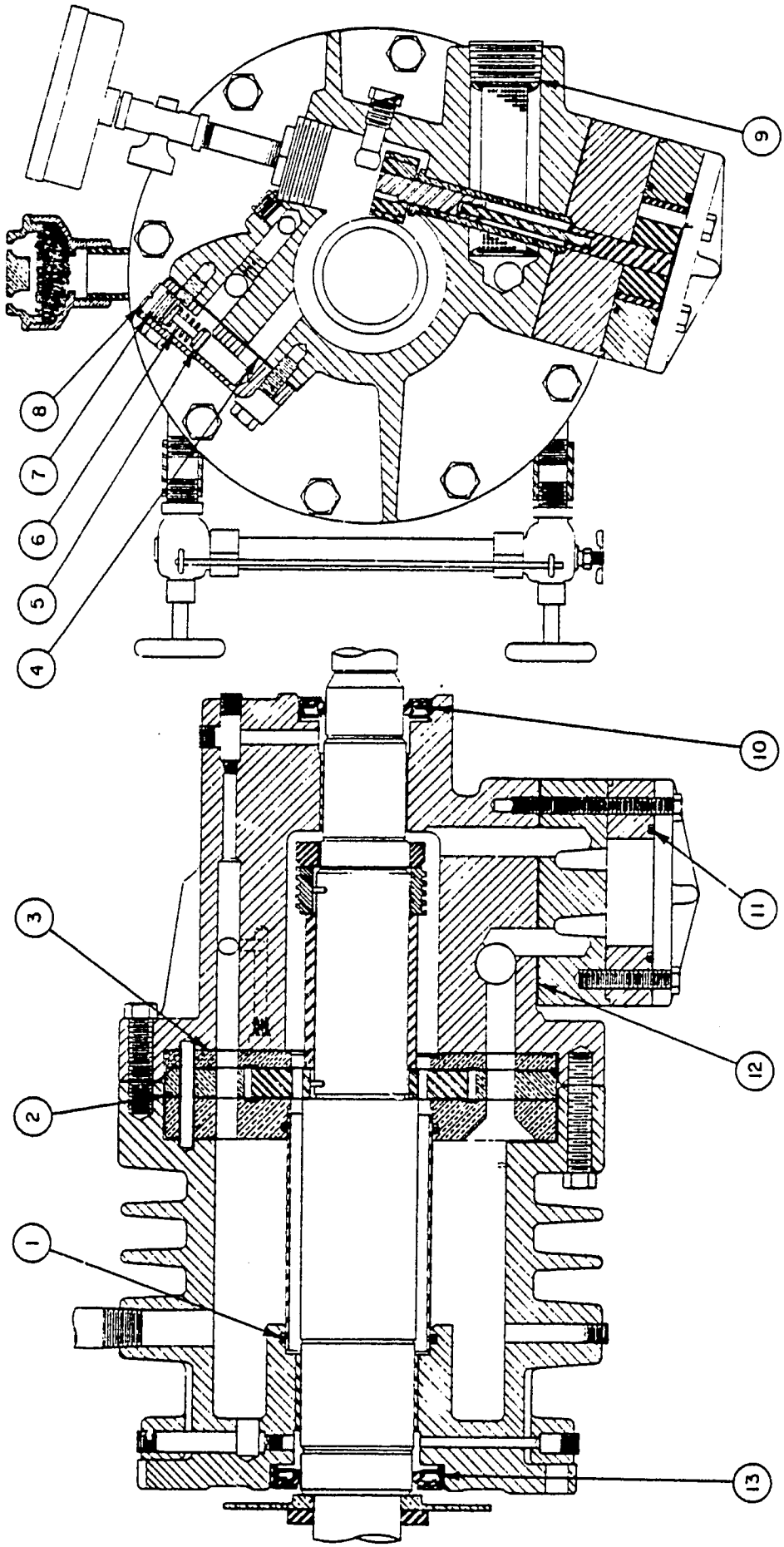

DS11/DS14 SLEEVE BEARING ASSEMBLY PARTS LIST

ITEM	PART NAME	QUANTITY	PART NUMBER
	REPLACEMENT BEARING ASSEMBLY		D2-C1160
1	O–RING	2	2496
2	O–RING	2	2497
3	GASKET–SPACER	1	B2-1143
4	GASKET–RELIEF VALVE BODY	1	A2-1770
5	VALVE – BYPASS RELIEF	1	A2-1909
6	SPRING – BYPASS RELIEF	1	A2-1912
7	O–RING	1	986
8	SCREW–BYPASS RELIEF ADJ.	1	A2-1910
9	O–RING	1	2544
10	OIL SEAL	1	2498
11	O–RING	2	2495
12	GASKET	1	A2-1730
13	OIL SEAL	1	2499

SEE PAGE 9 FOR PUMP REPAIR PARTS

1 QT. OF BEARING OIL IS PART NO. ML 7250

SEE DRAWING PAGE10 FOR CUTAWAY SECTION.

EB11/ES11 AND EB14 /ES14 PUMPS

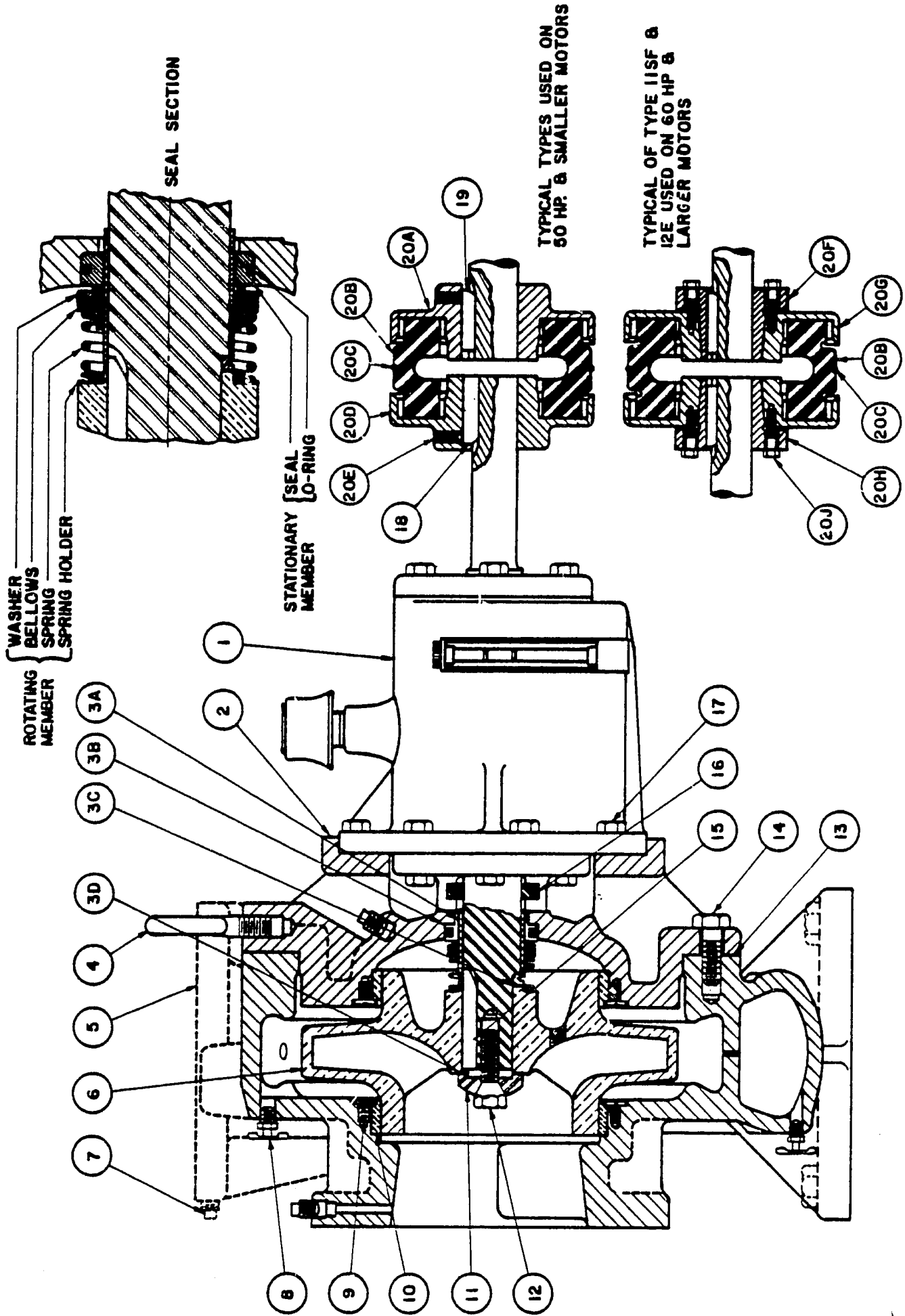

EB11/ES11 AND EB14/ES14 PARTS LIST

ITEM	PART NAME	QUAN-TITY	PART NUMBER					
			EB11	ES11	EB14L	ES14L	EB14H	ES14H
1	BEARING ASSEMBLY	1	D2-C1185	D2-C1184	D2-C1185	D2-C1184	D2-C1185	D2-C1184
2	HEAD	1	C2-1774		C2-1756			
3	SEAL REPLACEMENT KIT	1	ML7829					
3A	SLEEVE	1	A2-2809 (Part of Seal Replacement Kit)					
3B	SEAL	1	2420 (Part of Seal Replacement Kit)					
3C	GASKET–SLEEVE	1	A2-2974 (Part of Seal Replacement Kit)					
3D	WASHER–IMPELLER	1	A2-2395 (Part of Seal Replacement Kit)					
4	EYE BOLT	1	P-161					
5	CASE	1	D2-978		D2-786			
6	IMPELLER	1	D2-946		D2-793		D2-789	
7	PLUG	4	P-2					
8	DRAIN COCK	2	P-170					
9	BINDING HEAD SCREW	4	P-129					
10	WEAR RING	2	A2-2282		A2-2293			
11	IMPELLER CAP	1	A2-2418					
12	IMPELLER SCREW	1	A2-1632					
13	HEAD GASKET	1	B2-1641		B2-1642			
14	SCREW	16	P-158					
15	IMPELLER KEY	1	A2-2810					
16	WATER SLINGER	1	3308					
17	SCREW	8	P-169					
18	PUMP KEY	1	A2-1392					
19	MOTOR KEY	1	Supplied with motor					
20	COUPLING COMPLETE	1	See Table 2					
20A	MOTOR FLANGE	1	(Part of Type S Coupling Complete)					
20B	SLEEVE	1	See Table 3 – All Sizes					
20C	RING	1	(Part of Sleeve)					
20D	PUMP FLANGE	1	(Part of Type S Coupling Complete)					
20E	SCREW–SET	4	(Part of Type S Coupling Complete)					
20F	MOTOR BUSHING	1	(Part of Type SF or E Coupling Complete)					
20G	FLANGE	2	(Part of Type SF or E Coupling Complete)					
20H	PUMP BUSHING	1	(Part of Type SF or E Coupling Complete)					
20J	SCREW–BUSHING	VARIES	(Part of Type SF or E Coupling Complete)					

FOR MOTOR AND COUPLING DATA SEE PAGE 5.
FOR SLEEVE BEARING ASSEMBLY (D2-C1184) REPAIR PARTS SEE PAGE 18
FOR BALL BEARING ASSEMBLY (D2-C1185) REPAIR PARTS SEE PAGE 17
WHEN ORDERING REPLACEMENT IMPELLERS SPECIFY THE DIAMETER AND INCLUDE SERIAL NO.

1 QT. CAN OF BEARING OIL IS PART ML 7250.
CONSULT FACTORY FOR BASE, COUPLING GUARD, MOTOR SPACERS AND DATA ON OTHER SIMILAR PARTS PUMPS WITH SERIAL NUMBERS PRIOR TO 42121 HAVE PRESS IN WEAR RINGS.

SEE PAGE 12 FOR CUTAWAY SECTION

FB11 PUMP

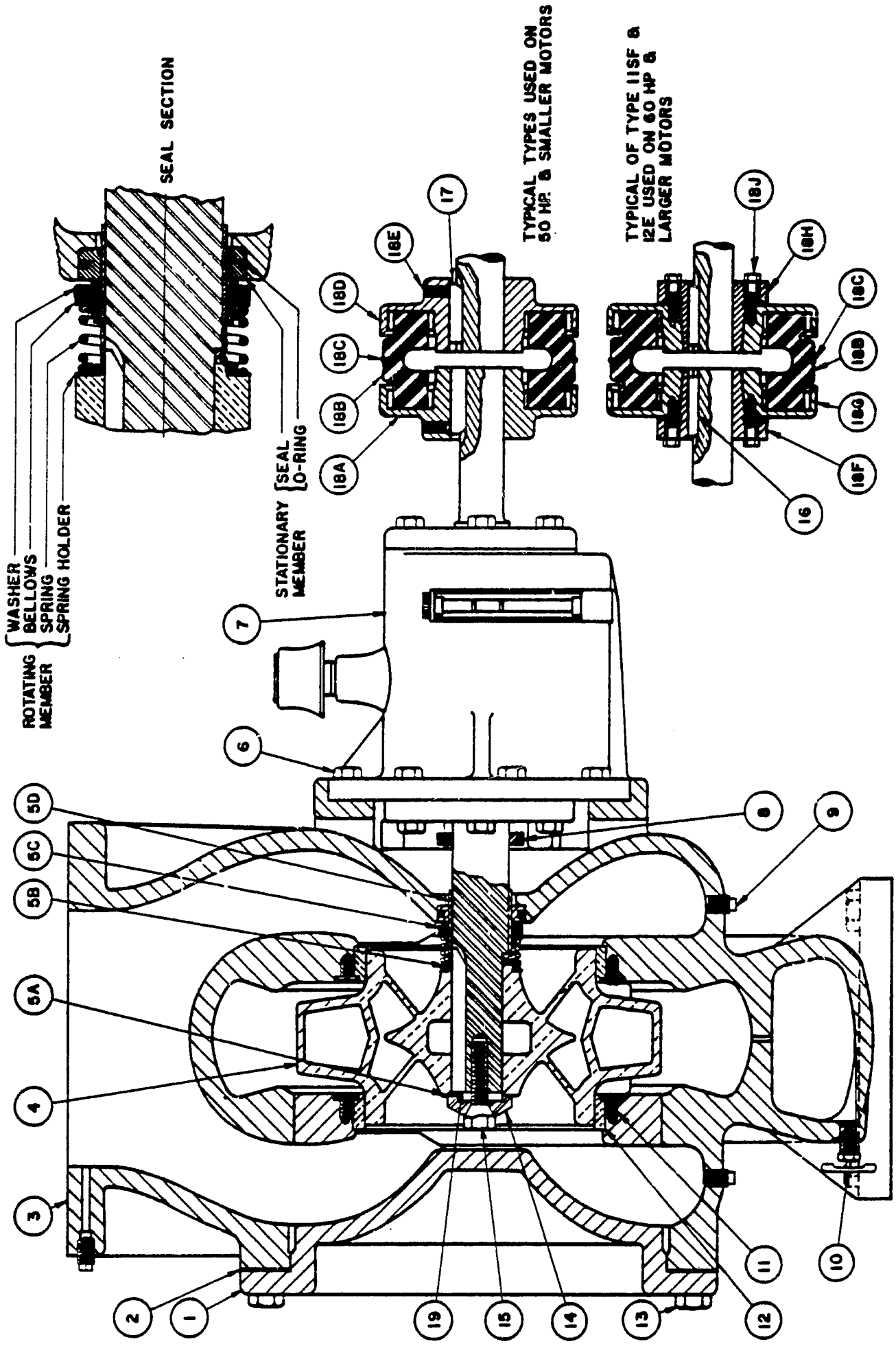
SEAL SECTION
TYPICAL TYPES USED ON 50 HP. & SMALLER MOTORS
TYPICAL OF TYPE 11SF & 12E USED ON 60 HP & LARGER MOTORS
WASHER
BELLOWS
SPRING
SPRING HOLDER
ROTATING MEMBER
SEAL
O-RING
STATIONARY MEMBER
1
2
3
4
5A
5B
5C
5D
6
7
8
9
10
11
12
13
14
15
16
17
18A
18B
18C
18D
18E
18F
18G
18H
18J

FB11 PARTS LIST

ITEM	PART NAME	QUAN-TITY	PART NUMBER – ALL MODELS
1	HEAD	1	D2-822
2	HEAD GASKET	1	B2-1770
3	CASE	1	D2-860
4	IMPELLER	1	D2-859
5	SEAL REPLACEMENT KIT	1	ML7837
5A	WASHER – IMPELLER	1	A2-2395 (Part of Seal Replacement Kit)
5B	GASKET – SLEEVE	1	A2-2974 (Part of Seal Replacement Kit)
5C	SEAL	1	2420 (Part of Seal Replacement Kit)
5D	SLEEVE	1	A2-3194 (Part of Seal Replacement Kit)
6	SCREW	8	P-169
7	BEARING ASSEMBLY		
	COMPLETE	1	D2-C1116
8	SLINGER – WATER	1	3308
9	PLUG	4	P-2
10	DRAIN COCK	2	P-170
11	BINDING HEAD SCREW	4	P-129
12	WEAR RING	2	A2-2432
13	SCREW	16	P-167
14	IMPELLER CAP	1	A2-2418
15	IMPELLER SCREW	1	A2-1632
16	PUMP KEY	1	A2-1392
17	MOTOR KEY	1	Supplied with motor
18	COUPLING COMPLETE	1	See Table 2
18A	PUMP FLANGE	1	(Part of type S Coupling Complete)
18B	SLEEVE	1	See Table 3 (Part of Coupling Complete)
18C	RING	1	(Part of Sleeve)
18D	MOTOR FLANGE	1	(Part of Type S Coupling Complete)
18E	SCREW – SET	4	(Part of Type S Coupling Complete)
18F	PUMP BUSHING	1	(Part of Type 11SF or 12 E Coupling Complete)
18G	FLANGE	2	(Part of Type 11SF or 12E Coupling Complete)
18H	MOTOR BUSHING	1	(Part of Type 11SF or 12E Coupling Complete)
18J	SCREW	VARIES	(Part of Type 11SF or 12E Coupling Complete)
19	IMPELLER KEY	1	A2-2591

FOR MOTOR AND COUPLING DATA SEE PAGE 5.

FOR BEARING ASSEMBLY REPAIR PARTS SEE PAGE 17

WHEN ORDERING REPLACEMENT IMPELLERS SPECIFY THE DIAMETER AND INCLUDE SERIAL NUMBER

1 QT. OF BEARING OIL IS PART ML7250

CONSULT FACTOR FOR BASE, COUPLING GUARD, MOTOR SPACERS AND DATA ON OTHER SIMILAR PARTS.

B9 AND AB9 BALL BEARING ASSEMBLY PARTS LIST

ITEM	PART NAME	QUANTITY	PART NUMBER
	COMPLETE ASSEMBLY		B2-2111
1	SCREW	16	P-130
2	FLANGE	1	B2-2110
3	SHAFT RETAINING RING	2	3066
4	BALL BEARING	2	3065
5	GASKET	2	A2-88
6	HOUSING	1	C2-176
7	BEARING RETAINING RING	1	3104
8	SHAFT	1	B2-1996
9	VENT FITTING	1	P-175
10	BUSHING	1	P-176
11	FLANGE	1	B2-1998

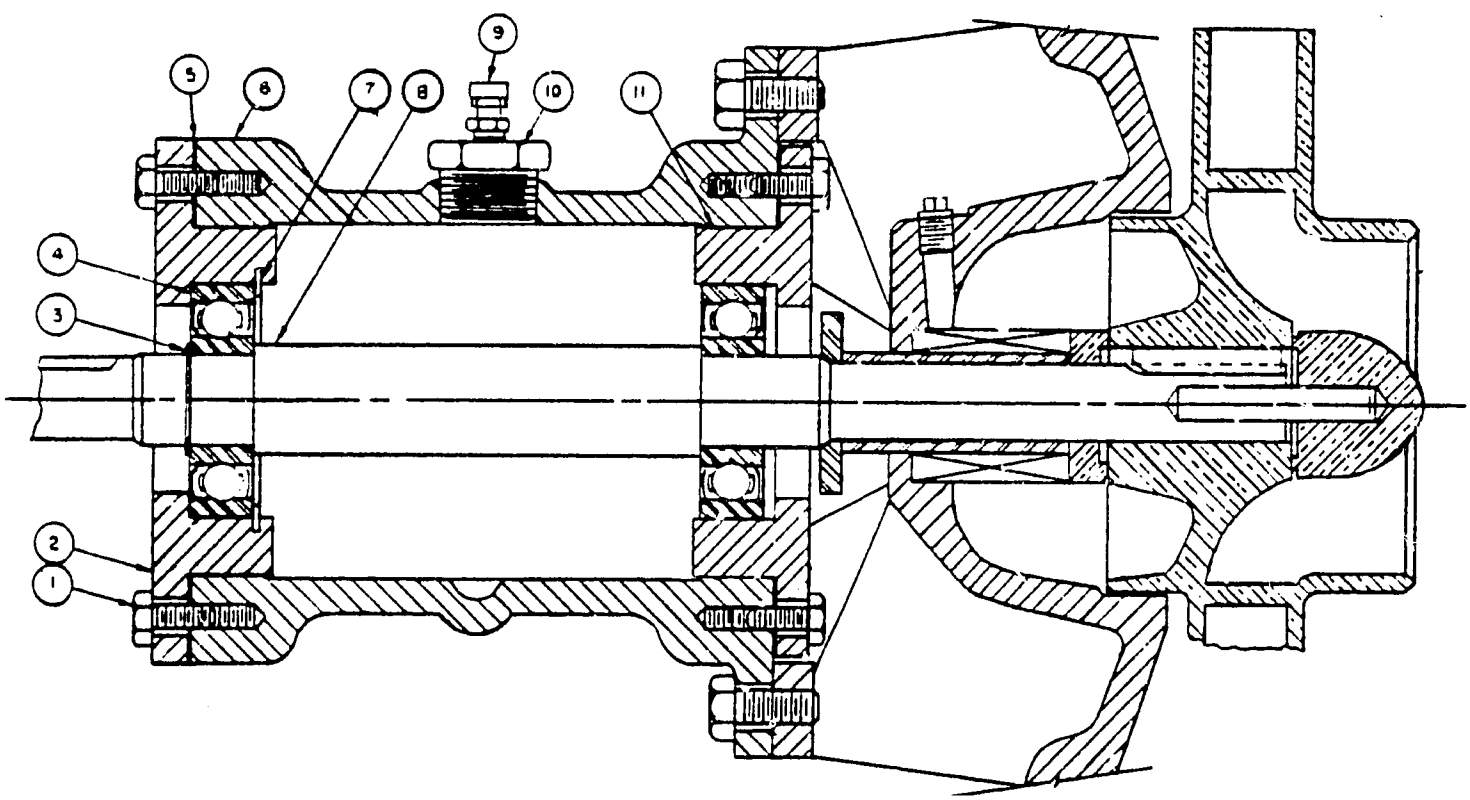

DB11/DB14, EB11/EB14 AND FB11 BALL BEARING ASSEMBLY PARTS LIST

ITEM	PART NAME	QUAN-TITY	PART NUMBER DB 11/14 REPLACEMENT	EB11/14	FB11
	COMPLETE ASSEMBLY		D2-C1162	D2-C1185	D2-C1116
31	SHAFT	1	C2-2135	C2-2187	C2-1892
32A	CAP	1	B2-1946	B2-1607	
32B	OIL SEAL		Part of B2-1946	Part of Cap B2-1607	
33	GASKET	2	B2-1644		
34	HOUSING	1	D2-790		
35	DEMISTER	1	2679		
36	RETAINING RING	1	2885		
37	BALL BEARING	1	2886		
38	RETAINING RING	2	2900		
39	SCREW	12	P-143		
40A	CAP	1	B2-1607		
40B	OIL SEAL		Part of Cap B2-1607		
41	OIL GAUGE	1	2919		
42	BALL BEARING	1	3055	2886	
	PLUG (NOT SHOWN)	1	P-133		

1 QT. OIL IS PART ML 7250

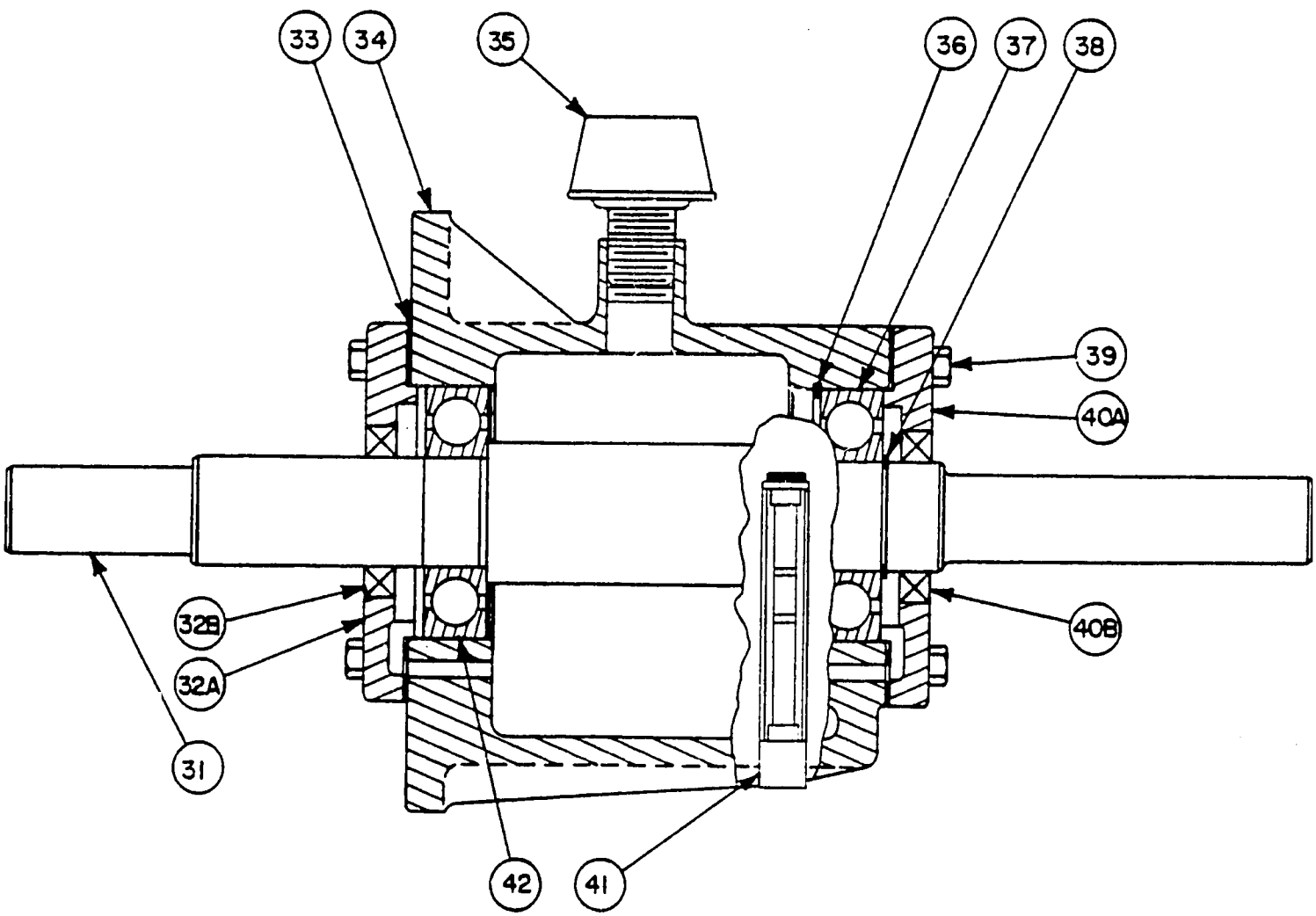

DS/11/DS14 AND ES11/ES14 SLEEVE BEARING ASSEMBLY REPAIR PARTS

ITEM	PART NAME	QUAN-TITY	PART NUMBER DS11/14 REPLACEMENT	ES11/14
	COMPLETE ASSEMBLY		D2-C1160	D2-C1184
51	SHAFT	1	C2-1718	C2-2188
52	FRONT BEARING	1	B2-1945	B2-1664
52A	OIL SEAL		Intergal Part of Front Bearing	
52B	BUSHING		Intergal Part of Front Bearing	
52C	FLANGE		Intergal Part of Front Bearing	
53	GASKET	3	B2-1644	
54	HOUSING	1	D2-1259	
55	SLINGER	1	B2-2196	
56	DEMISTER	1	2679	
57	SCREW-SET	1	P-125	
58	BACK BEARING	1	B2-1665	
58A	BUSHING		Intergal Part of Back Bearing	
58B	FLANGE		Intergal Part of Back Bearing	
59	SPRING	1	2920	
60	BALL BEARING	1	2886	
61	CAP	1	B2-1666	
61A	CASTING		Intergal Part of Cap	
61B	OIL SEAL		Intergal Part of Cap	
62	RETAINING RING	2	2900	
63	SCREW	6	P-145	
64	PLUG	1	P-5	
65	OIL GAUGE	1	2919	
66	SCREW	6	P-143	
	PLUG (NOT SHOWN)	1	P-133	

1 QT. OIL IS PART ML 7250

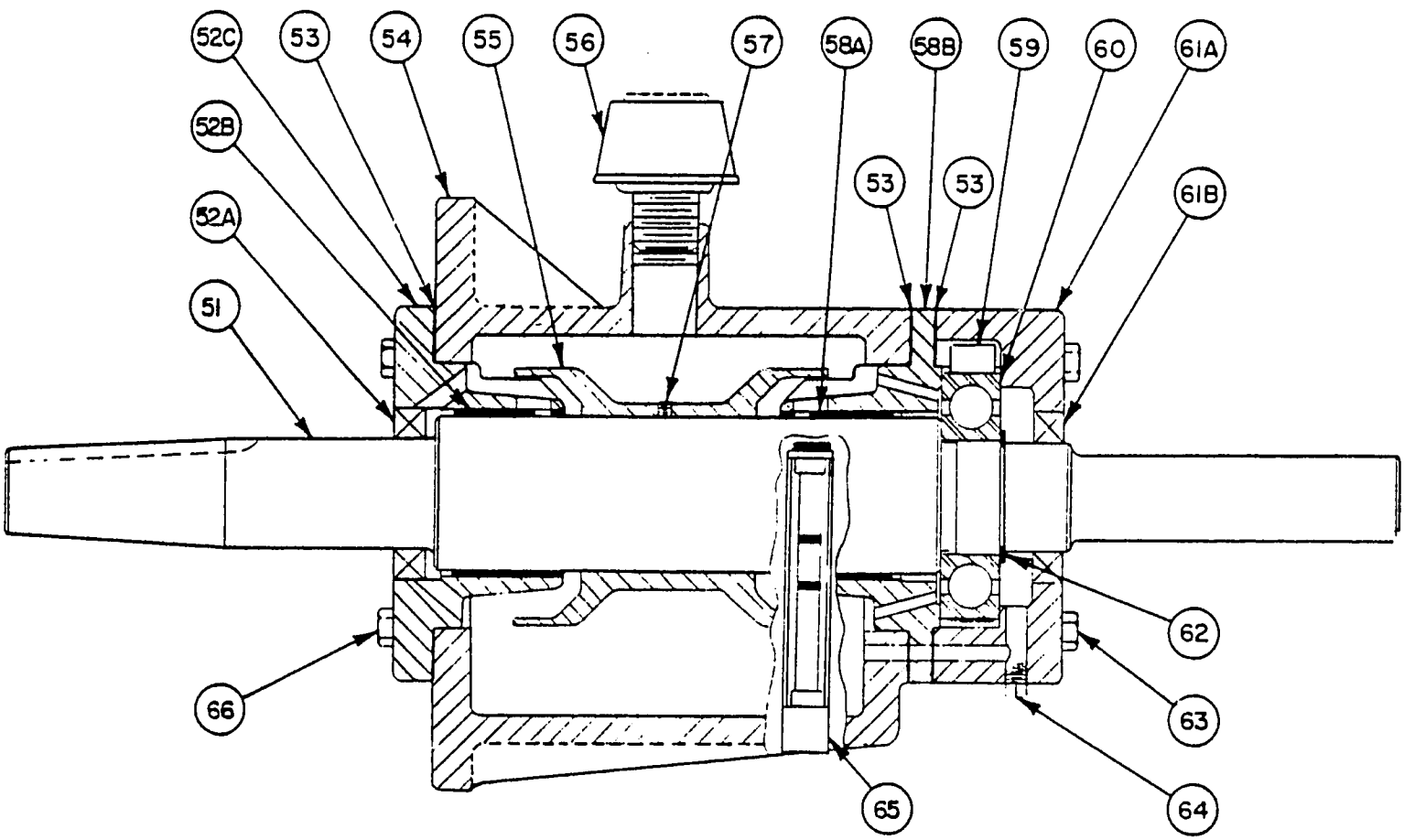

P—NUMBERS FOR BASE MOUNTED CENTRIFUGAL PUMPS

NUMBER	DESCRIPTION
P-2	PLUG – 1/4" PIPE
P-5	PLUG – 1/8" PIPE
P-9	COCK – 1/8" DRAIN
P-122	WASHER – 1/4" AM. STD. CAD. PLTD. FLAT.
P-125	SCREW – 1/4" – 28 UNF x 1/4" CUP POINT SOCKET HEAD SET
P-128	WASHER – 5/16" M SPRING LOCK
P-129	SCREW – 5/16" – 18 x 1/2" ZINC PLATED SLOTTED BINDING HEAD
P-130	SCREW – 5/16" – 18 x 7/8" HEX HEAD STEEL CAP – CLASS 5
P-131	SCREW – 5/16" – 18 x 1-1/4" HEX SOCKET HEAD CAP
P-133	PLUG – 3/8" PIPE COUNTERSUNK
P-137	SCREW – 3/8" – 16 HOLLOW HEX LOCKING
P-138	SCREW – 3/8" – 16 x 1/2" HOLLOW HEX FLAT POINT SET
P-139	SCREW – 3/8" – 16 x 3/4" HOLLOW HEX FLAT POINT SET
P-142	SCREW – 3/8" – 16 x 1" HEX HEAD CAP
P-143	SCREW – 3/8" – 16 x 1-1/4" HEX HEAD CAP
P-145	SCREW – 3/8" – 16 x 3-1/4" HEX HEAD CAP
P-150	SCREW – 1/2" – 13 x 1" HEX HEAD CAP
P-158	SCREW – 5/8" – 11 x 1-3/4" HEX HEAD CAP
P-161	BOLT – 5/8" – 11 EYE – PLAIN PATTERN
P-164	EXTENSION – 3/4" I.R.S.
P-167	SCREW – 3/4" – 10 x 2-3/4" HEX HEAD CAP
P-169	SCREW – 1/2" – 13 x 1-1/4" HEX HEAD CAP
P-170	COCK – 1/4" DRAIN
P-175	FITTING – 1/8" VENT
P-176	BUSHING – 3/4" MPT x 1/8" FPT

L/C 20030 620851 (R

SER/COM#1
Exhibit A-3

EL HANAFY REFREGRATOR

Spare Parts For

Two compressor Tpcx 350 - 05 G

FoR 5 year S

Prepared by Eng : Salah BotroS

Khir allah

EL HANAFY REFREGRATOR

Spare parts for two screw compressors model IPCX 350-05Q

Refernce Eng. Filenumber X2491)

rial Number	Discniption	D/B Standerd Part No	No OFF Required
A- Control Box X2491-30			
1	control circuit Braker (Icb)	BKR75	4
2	oil Heater circuit Braker 2cB	BKR74	4
3	Limit Relay 8cR	Rly 135	2
4	Master control Relayi IcR	Rly 126	3
5	Transfer Relay 2cR	Rly 126	3
6	Lock in Relay 4cR	Rly 129	3
7	Blocking Relay 6cR	Rly 126	2
8	Compressit cenfrolRely 3cR	Rly 129	2
9	Antl Recycle Timer ITR	TMR 114	2
	Oil pressare Faiure timer 2 TR	TMR 83	2
11	Oil pump shut down Timer 3TR	TMR83	2
12	Start up time delay Timer 4TR	TMR83	2
13	Elapsed time indicator 6TR	TMR86	1
14	Timer-seal oil temp. T'stat 12 TR	TMR 106	2
15	HI/LO pressure contrd (1PS)	CNT 175	1
16	LOW suction pressue pump down and unload contrcl (2Ps)	CNT 167	1
17	Oil Failure control (3ps)	Swt 80	1
	Tempreture load contrd T1c	CNT 232T2	2
	Tempreture control (8TAS, 12TAS 13 TAS)	CNT 231	5

20	Chilled water thermoskak (2TAS)	CNT 55	2
2I	Holding Relay 9cR	RIy I35	2
22	ON/OFF SwitcH (ISS)	Swt 82	2
23	Timer unlaod start 7tR	TMR 83	2
24	TRansfor mer (24V Sec) 2T	TaF 26	4
25	Pump starter aux contact	Swt 7I	4
26	Oil Pump starter (DM)	SRTD3A3AIO	3
B- Compressor standered N- 20I5 DLFILOD			
27	Indicator assembly(Slide Valve)	IDR 5LA	2
28	Seal assembly kit	XFRK7T4	2
C- chiller assymbly X2496-07			
29	Sucrion Head Filter	FLR 48A	2
30	Elow switch	Swt II9	4
3I	Pilot expantion valve with coil	VAL 9[illegible]	8
32	expantion valve with coil (Large) I00 HI	VAL 494	2
33	expansion valve With coil (small) 50 HI	VAL 539	2
34	Filter Drier Block	BLK 4I	I0
35	Temprature sensor contnol	cnt 233 T5	2
D- Seal oil cooler AssEmbly SociAT2			
36	Solenoid Valve coil	COL I22 TI	2
37	Temprature pilot valve	VAE-833	2
38	Solenoid valve/ Less coiL	VAL 488	2
E-Liquid injection assEbly inJc 3AT4			
39	Expansion Valve	VAL 69I T4	I
40	Solenoid Valve	CoL I23 TI	I
.I	Solenoid Valve/ Less coil	Val 902 TI	I

Serial N-	Dis -	D/B Part N-	N- off
F-Hot gas cap control opt25T3			
42	Valve- solenoid	VAL 902 T5	I
43	Coil - Solenoid	CoL I26 TI	I
G-unlaad- Start			
44	Valve -Solenoid	VAL 902T2	I
45	Coil - Solenold	CoL I26 TI	I
H- oil Sump Assembly Sp 97 W			
46	Oil sump Heater	HTR 7I	2
47	Oil Pump Ass	X249I - 23	I
48	Oil Pump Relef valve	Valve 720	I
T- Oil Filter assyembly FLR II0 AT2			
.49	Filter Element	FLR I25	3
0	Oil	Oil 4	40 GAL
J- unlaad solenoid Valve assembly			
5I	24 Volt coiL	CoL I22 T4I	4
52	II5 VoItcoit	COL I22 T40	2
53	Solenoid Valve / Less coiL	Val 488	3
54	Metering Valve	VaL 547	3
55	Portable Manual Repregerion Oil Pump FOr Fecding Oil inside Ref sysrem		I

II - Accessories For

El HANAFY Refvigeraeor Plant

6- Three - way valves complete with Sensors

and Potentiem etens

EXHIBIT A-4

DUNHAM-BUSH

PCX/DBX CONSOLIDATED PARTS PRICE LIST

Refer to latest revision of Form 1278 for Terms of Sale.

Terms of Shipment: F.O.B. Shipping Point.

All prices subject to change without notice.

Parts will be invoiced at prices in effect at the time of shipment.

All components and controls listed are for standard units only, unless otherwise noted.

Minimum Billing is $25.00.

ORDERING INSTRUCTIONS

1. When ordering, specify Model, Serial No., "X" No., and other pertinent information on the face of the order.
2. Parts selections should be made from the "RPL" furnished with the unit where possible. For convenience, we have included several pages listing field replacement kits with a brief description of each at the back of this form.
3. Send all orders to: Dunham-Bush, Inc., Service Parts Dept.
   179 South St., West Hartford, Conn. 06110
4. All prices are for one each part or kit as applicable.
5. Federal, state, local or other taxes are not included in the attached prices.
6. All orders requiring Special Handling, will have a $50 net additional charge invoiced or actual cost, whichever is higher. This includes delivery to the airport, bus station, etc.

PART NO.	DESCRIPTION	LIST PRICE
BKR74	CIRCUIT BREAKER	28.62
BKR75	CIRCUIT BREAKER	28.62
BLK41	DRIER BLOCK	59.57
BLK42	DRIER BLOCK	23.59
CNT55	CONTROL, TEMP	70.18
CNT137T1	CONTROL, MTR PRT	100.17
CNT167	CONTROL, LOW PRESS	69.22
CNT175	CONTROL, DUAL PRESS	88.03
CNT206	CONTROL, TEMP	63.55
CNT206	CONTROL, TEMP	1,020.13
CNT231	CONTROL, TEMP	87.82
CNT232	CONTROL, TLC	963.31
CNT233T1	CONT SENR 35/55DEG	101.28
CNT233T2	CONT SENR 55/75DEG	241.88
CNT233T3	CONT SENR=35/-15DEG	223.71
CNT233T5	CONT SENR=15/10DEG	258.84
CNT233T5	CONT SENSR 10/35DEG	258.84
CNT242	CONTROL, LOW PRESS	64.13
CNT244	CONTROL, TEMP	67.89
CNT249	CONTROL, PRESS=DIFF	514.00
CNT276	CONTROL, PRESS	274.06
CNT277	CONTROL, PRESS	592.60
COL122T1	COIL 120V	28.62
COL122T40	COIL 120V	28.62
COL122T41	COIL 24V	28.62
COL123T1	COIL 120V	33.39
FLR47A	FILTER, SUCTION	87.42
FLR48A	FILTER, SUCTION	125.95
FLR49A	FILTER, SUCTION	102.78
FLR71	FILTER, OIL	22.79
FLR95T1	FILTER, SUCTION 4	243.26
FLR95T2	FILTER, SUCTION 5	307.33
FLR95T3	FILTER, SUCTION 6	390.80
FLR107T1	FILTER, OIL	400.86
FLR107T2	FILTER, OIL	489.70
FLR125	FILTER, OIL	36.06
GAG40	GAUGE	34.19
GAG41	GAUGE	34.19
GAG52	GAUGE	99.38
GKT143	GASKET	15.42
GKT222	GASKET	20.50
GKT223	GASKET	15.70
GKT224	GASKET	6.54
GKT229	GASKET	5.14
GKT238	GASKET	.60
GKT242	GASKET	17.56
GKT243	GASKET	24.38
GKT248	GASKET	5.95
GKT250	GASKET	2.73
GKT252	GASKET	7.02
GKT257	GASKET	4.61
GKT258	GASKET	3.34
GKT259	GASKET	25.05
GKT260	GASKET	27.78
GKT261	GASKET	21.37
GKT265	GASKET	40.07
GKT266	GASKET	16.70
GKT267	GASKET	2.67
GKT269	GASKET	1.34
GKT279	GASKET	52.15
GKT280	GASKET	52.15
GKT313	GASKET	21.43
GKT314	GASKET	5.54
GKT318	GASKET	13.70
GKT329	GASKET	1.40
GKT334	GASKET	3.68
GKT350T1	GASKET	15.62
GKT350T2	GASKET	21.23
GKT350T3	GASKET	40.07
GKT350T4	GASKET	33.59
GKT350T5	GASKET	36.67
GKT380	GASKET	8.15
GKT382	GASKET	18.09
GKT383	GASKET	8.75
GKT387	GASKET	21.71
GKT415	GASKET	10.48
GKT416	GASKET	9.41
GKT417	GASKET	8.75
GKT427	GASKET	30.05
GKT429T1	GASKET	70.12
GKT429T2	GASKET	70.12
GKT431T1	GASKET	55.43
GKT431T2	GASKET	52.43
GKT433T1	GASKET	61.78
GKT433T2	GASKET	61.78
GKT435T1	GASKET	80.80
GKT435T2	GASKET	80.80
GKT446	GASKET	14.09
GKT447	GASKET	14.89
GKT448	GASKET	12.36
GKT466	GASKET	11.35
GKT467	GASKET	11.62
GKT468	GASKET	11.09
GKT503	GASKET	83.48

PART NO.	DESCRIPTION	LIST PRICE
GKT504	GASKET	89.16
GKT505	GASKET	101.84
GKT506	GASKET	111.86
GKT507	GASKET	115.20
GKT508	GASKET	81.20
GKT509	GASKET	86.81
GKT510	GASKET	100.17
GKT511	GASKET	110.19
GKT512	GASKET	113.53
GKT117	GASKET	1.20
GLS16A	SIGHT GLASS ASSY	38.00
HTR71	HEATER, OIL	134.43
IDR48	INDICATOR, LIQ 5/8	21.78
IDR49	INDICATOR, LIQ 7/8	21.78
IDR56A	IND ASSY, LESS SCALE	170.89
IDR57A	IND ASSY, LESS SCALE	183.51
KIT250	KIT, CAM SWITCH	59.96
LMP10	LIGHT, RED	10.60
LMP11	LIGHT, YELLOW	10.60
LMP12	LIGHT, WHITE	10.60
LMP13	LIGHT, WHITE	9.06
LMP14	LIGHT, AMBER	13.04
LMP15	LIGHT, RED	11.50
PMP91T3	PUMP, OIL VIKING	1,444.99
PMP91T4	PUMP, OIL VIKING	1,689.59
PMP91T6	PUMP, OIL VIKING	2,212.64
RLY126	RELAY	140.77
RLY127	RELAY	193.50
RLY129	RELAY	99.22
RLY133	RELAY	19.29
RLY134	RELAY	27.40
RLY135	RELAY FLIP PACK	145.75
RNG104	RING	2.20
RNG129	RING	30.98
RNG130	RING	23.11
RNG13	RING	32.39
RNG132	RING	32.52
RNG135	RING	1.06
RNG136	RING	7.53
RNG144	RING	5.09
RNG145	RING	4.56
RNG146	RING	5.09
RNG147	RING	7.37
RNG148	RING	3.07
RNG162	RING	40.07
RNG164	RING	17.36
RNG165	RING	4.67
RNG166	RING	1.96
RNG167	RING	1.01
RNG170	RING	42.88
RNG173	RING	31.59
RNG181	RING	28.92
RNG182	RING	19.71
RNG202	RING	2.23
RNG203	RING	24.17
RNG204	RING	.21
RNG205	RING	2.44
RNG206	RING	1.86
RNG207	RING	3.23
RNG209	RING	4.45
RNG210	RING	3.02
RNG211	RING	3.66
RNG217T3	RING	7.10
RNG217T4	RING	99.85
RNG217T5	RING	193.34
RNG229	RING	41.18
RNG230	RING	1.27
RNG236	RING	.95
RNG237	RING	.80
RNG238	RING	.95
RNG239	RING	.80
RNG255	RING	1.70
RNG256	RING	.69
RNG275	RING	.42
RNG282T2	RING	3.60
RNG283T3	RING	5.19
RNG283T4	RING	3.98
RNG293	RING	.42
RNG294T1	RING	5.57
SKA46T1	STRAINER, OIL	66.78
SKA52	STRAINER, OIL	43.99
SKA64A	STRAINER ASSY, OIL	FACTORY
SKA79A	STRAINER ASSY, OIL	FACTORY
SKA80A	STRAINER ASSY, OIL	FACTORY
SWT61	SWITCH, FLOW	104.78
SWT71	SWITCH, AUX	6.89
SWT80	SWITCH, PRESS=DIFF	422.30
SWT82	SWITCH	42.98
SWT83	SWITCH	16.96
SWT89	SWITCH, REED	41.27
SWT91	SWITCH	56.94
TMR79	TIMER, ELAPSED	20.78
TMR83	TIMER	351.92
TMR103	TIMER	162.88

55

PART NO.	DESCRIPTION	LIST PRICE
TMR105	TIMER	58.41
TMR106	TIMER	489.72
TMR110	TIMER	73.60
TMR114	TIMER	160.80
TMR135	TIMER	64.55
TOL1	TOOL,INNER LKNUT 163	298.18
TOL2	TOOL,INNER LKNUT 204	292.17
TOL3	TOOL,INNER LKNUT 255	440.00
TOL4	TOOL,LOCKNUT SPINDLE	170.29
TOL5	TOOL,BEARING LOCKNUT	1,402.38
TOL6	TOOL,OUTER NUT 163	292.17
TOL7	TOOL,OUTER NUT 204	347.26
TOL8	TOOL,OUTER NUT 255	466.00
TOL9	TOOL,SLIPPER SEAL	176.00
TOL10	TOOL,SEAL ASSY	168.00
TOL11T1	TOOL,SEAL ASSY	834.75
TOL11T2	TOOL,SEAL ASSY	1,101.87
TOL11T3	TOOL,SEAL ASSY	1,480.00
TOL11T4	TOOL,SEAL ASSY	1,402.38
TOL12	TOOL,SLIDE VALVE	1,080.00
TOL13	TOOL,BUSHING	26.04
TOL14	TOOL,STATOR PULLER	387.32
TOL15	TOOL,THRUST BRG	357.27
TOL16T1	TOOL,COLLAR ASSY 163	294.23
TOL16T2	TOOL,COLLAR ASSY	227.05
TOL16T3	TOOL,COLLAR ASSY	293.83
TOL17	TOOL,TORQUE WRENCH	1,402.38
TOL18	TOOL,TORQUE WRENCH	1,402.38
TOL19	TOOL,TORQUE WRENCH	645.00
TOL20	TOOL,SPIND GAGE PLUG	380.00
TOL22	TOOL,AIR CYL ADJ	1,035.09
TOL23T1	TOOL,MOTOR HOOK	934.92
TOL23T2	TOOL,MOTOR HOOK	934.92
TOL24	TOOL,SLIPPER SEAL	160.27
TSF26	TRANSFORMER	23.69
VAL388	VALVE,CHECK	32.70
VAL442	VALVE,WATER REGULATR	680.49
VAL449	VALVE,WATER REGULATR	961.10
VAL454	VALVE TX	119.73
VAL456	VALVE,GLOBE	9.12
VAL460	VALVE,TX	588.41
VAL466	VALVE,TX	1,337.56
VAL486	VALVE,SOLENOID	46.64
VAL494	VALVE,TX	622.27
VAL509A	VALVE ASSY, UNLOAD	441.55
VAL537	VALVE,TX	660.86
VAL536	VALVE,TX	867.11
VAL539	VALVE,TX	583.53
VAL547	VALVE,GLOBE	21.71
VAL585	VALVE, TX	887.11
VAL676	VALVE, TX	119.73
VAL691T1	VALVE, TX	307.93
VAL691T2	VALVE, TX	451.98
VAL691T3	VALVE, TX	451.98
VAL691T4	VALVE, TX	470.83
VAL691T5	VALVE,TX	470.83
VAL691T6	VALVE,TX	392.36
VAL720	VALVE,PRESS REG	257.79
VAL726	VALVE,CHECK	691.12
VAL727	VALVE,CHECK	622.80
VAL734T1	VALVE,RELIEF	81.46
VAL734T2	VALVE,RELIEF	81.46
VAL734T3	VALVE,RELIEF	81.46
VAL735T1	VALVE,RELIEF	117.98
VAL735T2	VALVE,RELIEF	111.30
VAL735T3	VALVE,RELIEF	117.98
VAL769	VALVE,PRESS REGULATR	213.86
VAL784	VALVE,PRESS REGULATR	429.94
VAL820	VALVE,TX	1,284.24
VAL833	VALVE,PRESS REGULATR	259.81
VAL902T1	VALVE,SOLENOID	130.06
VAL902T3	VALVE,SOLENOID	193.13
VAL902T10	VALVE,SOLENOID	78.65
VAL919	VALVE,TX	205.64
XFRK4T1	OIL PUMP ASSY 208V	FACTORY
XFRK4T2	OIL PUMP ASSY 230V	FACTORY
XFRK4T3	OIL PUMP ASSY 460V	FACTORY
XFRK5	OIL PUMP CONV KIT	FACTORY
XFRK7T2	FLD REP KIT SHF SEAL	849.06
XFRK7T4	FLD REP KIT SHF SEAL	983.66
XFRK7T6	FLD REP KIT SHF SEAL	973.08
XFRK7T7	FLD REP KIT SHF SEAL	1,013.36
XFRK7T8	FLD REP KIT SHF SEAL	1,131.02
XFRK7T9	FLD REP KIT SHF SEAL	1,719.32
XFRK7T10	FLD REP KIT SHF SEAL	1,631.34
XFRK7T11	FLD REP KIT SHF SEAL	1,933.44
XFRK7T12	FLD REP KIT SHF SEAL	1,335.60
XFRK7T14	FLD REP KIT SHF SEAL	1,425.70
XFRK7T15	FLD REP KIT SHF SEAL	1,219.00
XFRK7T16	FLD REP KIT SHF SEAL	1,257.16
XFRK7T17	FLD REP KIT SHF SEAL	1,232.76
XFRK7T18	FLD REP KIT SHF SEAL	1,587.88
XFRK7T19	FLD REP KIT SHF SEAL	1,219.00
XFRK7T20	FLD REP KIT SHF SEAL	975.20
XFRK7T21	FLD REP KIT SHF SEAL	828.92
XFRK7T22	FLD REP KIT SHF SEAL	1,344.08
XFRK7T23	FLD REP KIT SHF SEAL	1,110.88
XFRK7T24	FLD REP KIT SHF SEAL	1,948.28
XFRK7T25	FLD REP KIT SHF SEAL	1,871.96
XFRK7T26	FLD REP KIT SHF SEAL	2,028.84
XFRK7T27	FLD REP KIT SHF SEAL	1,570.92
XFRK7T28	FLD REP KIT SHF SEAL	1,961.00
XFRK8T30	KIT,GASKET 163OD	323.01
XFRK8T31	KIT,GASKET 163HER	324.35
XFRK8T32	KIT,GASKET 204OD	203.54
XFRK8T33	KIT,GASKET 204HER	251.90
XFRK8T34	KIT,GASKET 255OD	309.72
XFRK8T35	KIT,GASKET 255HER	408.49
XFRK10T1	SEE PG 5 FOR DESCRIP	56.56
XFRK10T2	SEE PG 5 FOR DESCRIP	51.95
XFRK10T3	SEE PG 5 FOR DESCRIP	46.01
XFRK10T4	SEE PG 5 FOR DESCRIP	66.58
XFRK10T5	SEE PG 5 FOR DESCRIP	61.90
XFRK10T6	SEE PG 5 FOR DESCRIP	56.03
XFRK10T7	SEE PG 5 FOR DESCRIP	77.44
XFRK10T8	SEE PG 5 FOR DESCRIP	64.91
XFRK10T9	SEE PG 5 FOR DESCRIP	62.11
XFRK10T10*		99.04
XFRK11	FLD REP KIT,OIL F SW	538.85
XFRK19T1	FLDREP KIT,TLC35/55D	939.86
XFRK19T2	FLDREP KIT,TLC10/35D	990.02
XFRK19T3	FLDRP KIT,TLC-15/10D	981.87
XFRK19T4	FLDREPKITTLC-35/-15D	1,044.30
XFRK20T1	FLDREPKIT,TLC 35/55D	1,027.14
XFRK20T2	FLDREPKIT,TLC 10/35D	1,096.59
XFRK10T3	FLDREPKIT,TLC-15/10D	1,068.45
XFRK20T4	FLDREPKIT,TLC-35/-15	1,131.59
XFRK20T5	FLDREPKIT,TLC-55/-35	1,141.61
XFRK24T1	SEE PAGE5 FOR DESCR	1,093.25
XFRK24T2	SEE PAGE5 FOR DESCR	931.05
XFRK24T3	SEE PAGE5 FOR DESCR	1,016.25
XFRK24T4	SEE PAGE5 FOR DESCR	1,028.68
XFRK24T5	SEE PAGE5 FOR DESCR	1,209.39
XFRK24T6	SEE PAGE5 FOR DESCR	1,171.38
XFRK24T7	SEE PAGE5 FOR DESCR	1,021.67
XFRK24T8	SEE PAGE5 FOR DESCR	988.81
XFRK24T9	SEE PAGE5 FOR DESCR	1,090.32
XFRK24T10	SEE PAGE5 FOR DESCR	1,249.66
XFRK24T11	SEE PAGE5 FOR DESCR	1,178.80
XFRK24T12	SEE PAGE5 FOR DESCR	1,261.15
XFRK24T13	SEE PAGE5 FOR DESCR	1,142.34
XFRK25T1	FLDREPLKIT,REED SWIT	254.63
XFRK25T2	FDREPKIT,REEDSWTCAM	497.38
XFRK27T1*	SEE PAGE 5 FOR DESCR	1,332.87
XFRK27T2*	SEE PAGE 5 FOR DESCR	994.15
XFRK27T3	SEE PAGE 5 FOR DESCR	1,677.65
XFRK27T5*	SEE PAGE 5 FOR DESCR	3,057.53
XFRK27T6*	SEE PAGE 5 FOR DESCR	2,364.21
XFRK27T11	SEE PAGE 5 FOR DESCR	1,832.64
XFRK27T12	SEE PAGE 5 FOR DESCR	1,587.42
XFRK27T13	SEE PAGE 5 FOR DESCR	2,349.32
XFRK27T15	SEE PAGE 5 FOR DESCR	3,917.84
XFRK27T16	SEE PAGE 5 FOR DESCR	3,173.06
XFRK28	F R KIT,MTR HTR 255	286.83
XFRK29	F R KIT,MTR HTR 204	205.68
XFRK30	F R KIT,MTR HTR 163	204.21
XFRK31T1	SEE PAGE 5 FOR DESCR	1,066.15
XFRK31T2	SEE PAGE 5 FOR DESCR	4,171.88
XFRK31T3	SEE PAGE 5 FOR DESCR	1,038.77
XFRK31T4	SEE PAGE 5 FOR DESCR	4,163.00
XFRK31T5	SEE PAGE 5 FOR DESCR	1,031.75
XFRK31T6	SEE PAGE 5 FOR DESCR	4,323.60
XFRK31T7	SEE PAGE 5 FOR DESCR	1,128.25
XFRK31T8	SEE PAGE 5 FOR DESCR	4,420.43
XFRK31T9	SEE PAGE 5 FOR DESCR	1,189.09
XFRK31T10	SEE PAGE 5 FOR DESCR	4,472.99
XFRK31T11	SEE PAGE 5 FOR DESCR	1,294.00
XFRK31T12	SEE PAGE 5 FOR DESCR	5,573.46
XFRK31T13	SEE PAGE 5 FOR DESCR	1,201.04
XFRK31T14	SEE PAGE 5 FOR DESCR	5,492.05
XFRK31T15	SEE PAGE 5 FOR DESCR	1,328.66
XFRK31T16	SEE PAGE 5 FOR DESCR	5,619.34
XFRK31T17	SEE PAGE 5 FOR DESCR	1,677.38
XFRK31T18	SEE PAGE 5 FOR DESCR	6,015.54
XFRK31T21	SEE PAGE 5 FOR DESCR	1,046.11
XFRK31T22	SEE PAGE 5 FOR DESCR	3,743.89
XFRK31T23	SEE PAGE 5 FOR DESCR	1,018.73
XFRK31T24	SEE PAGE 5 FOR DESCR	3,734.94
XFRK31T26	SEE PAGE 5 FOR DESCR	3,788.16
XFRK31T28	SEE PAGE 5 FOR DESCR	3,885.00
XFRK31T30	SEE PAGE 5 FOR DESCR	3,937.55
XFRK31T32	SEE PAGE 5 FOR DESCR	4,814.57
XFRK31T34	SEE PAGE 5 FOR DESCR	4,733.10
XFRK31T36	SEE PAGE 5 FOR DESCR	4,860.39
XFRK31T38	SEE PAGE 5 FOR DESCR	5,256.66
XFRK32	SEE PAGE 5 FOR DESCR	222.31
XFRK33T1	SEE PAGE 5 FOR DESCR	153.27
XFRK33T2	SEE PAGE 5 FOR DESCR	341.25

50

PART NO.	DESCRIPTION	LIST PRICE
XFRK33T3	SEE PAGE 5 FOR DESCR	233.33
XFRK33T4	SEE PAGE 5 FOR DESCR	654.04
XFRK42	F R KIT, SLIDE VALVE	27.85
050014A1	IDR CONV 1610A/B	285.01
050014A2	IDR CONV 1615 A/B	270.19
050014A3	IDR CONV 2010	280.07
050014A4	IDR CONV 2013	293.30
050014A5	IDR CONV 2015	290.83
050014A6	IDR CONV 2510	306.19
050014A7	IDR CONV 2515	314.21
050053A1	F R KIT,SEAL 255	1,675.98
050053A2	F R KIT,SEAL 255	1,314.70
050053A3	F R KIT,SEAL 255	1,651.67
050053A4	F R KIT,SEAL 255	1,405.58
050053A5	F R KIT,SEAL 255	1,220.60
050110A2	VALVE,TX	743.53
050110A3	VALVE,TX	701.05
050110A4	VALVE,TX	802.17
050110A5	VALVE,TX	850.25
050110A6	VALVE,TX	1,128.44
050110A7	VALVE,TX	1,146.08
050147A1	LIQ INJ LINE ASSY	1,282.84
050147A2	LIQ INJ LINE ASSY	1,282.84
050155A1	GAUGE	40.74
050156A1	GAUGE	40.74
051066A1	F R KIT,MTR PRUT	105.71
050181A1	RELAY	73.03
050182A1	LAMP	3.66
050182A2	LAMP	3.66
050183A1	LIGHT	12.19
050218A2	VALVE,TX	466.77
050218A4	VALVE,TX	466.77
050266A1	VALVE,TX	166.58
050309A1	CORE, FILTER	22.15
050414A1	VALVE,TX	530.05
050800A1	RELAY,TIME	96.46
0609P65	VALVE RELIEF	36.60
0617610	SIGHT GLASS, LIQUID	24.54
050664A1	SEAL,VIKING PUMP	2.28

DUNHAM-BUSH PRICES

FORM NO. 4632-1F
EFFECTIVE
MARCH 1981
SUPERSEDES 4632-1E

PCX/DBX HERMETIC OIL PUMP REPLACEMENT PARTS PRICE

SELECTION

IF THIS PUMP IS ON THE UNIT	REPLACE IT WITH THIS PUMP & KIT OR KITS	ALSO SEND STRAINER ASSEMBLY
1. PMP 84 (OBSOLETE)	XFRK - 4 XFRK - 5	SELECT PROPER STRAINER FROM TABLE
2. PMP 86T1 (OBSOLETE)		
3. PMP 86T2 (OBSOLETE)		
4. PMP 88A	XFRK - 4	
5. PMP 90T1		
6. PMP 90T2		

PCX-H	120	150	180	230	290	350	400	450	500	580	630	700	750
Strainer	SRA 80A						SRA 79A	SRA 64A					
Oil Sep.	Spool						20"	24"	24"	24"	24"	24"	26"
								SEP – SUMP DIA					
PCX-O	120	150	180	230	290	350	400	450	500	580	630	700	750
Strainer	SRA 79A							SRA 64A					
Oil Sep.	16"	16"	16"	18"	18"	18"	20"	24"	24"	24"	24"	24"	26"
	SEP – SUMP DIA												
DBX	1610	1613	1615	2010	2013	2015							
Strainer	SRA 79A												
Oil Sep.	18"	18"	18"	20"	20"	20"							
	SEP – SUMP DIA												
ARPCX-120													
Strainer	SRA 79A												
Oil Sep.	20"												

PART NUMBER	DESCRIPTION	LIST PRICE See Note (1)
XFRK 4	REPLACEMENT OIL PUMP & GASKETS	$4,090.00
XFRK 5	PIPING CONVERSION KIT	246.00
SRA 64A	STRAINER ASSEMBLY	316.00
SRA 79A	STRAINER ASSEMBLY	274.00
SRA 80A	STRAINER ASSEMBLY	268.00

1. Ordering Instructions: Oil pump order will not be accepted unless it includes the following information:
   a) Oil pump motor voltage, phase, hertz
   b) Complete oil pump nameplate data, including Pump Part No. and Type No.
   c) Complete unit model no.
   d) Complete unit serial no.
   e) Engineering file no. ("X" No.)

2. If out of warranty the following credit will be issued depending on the condition of the returned pump as determined by the West Hartford Quality Control Department.
   a) Current Pump Models

	Credit List Deduct
1) Pump failure (other parts useable)	$1,514.00
2) Motor burnout (other parts useable)	1,293.00
3) Pump and motor failure (Housing and shaft useable)	946.00

   b) Obsolete pump model (No Credit)
   c) Follow RGB Procedure for returning the pump

3. Certain PCX/DBX units may have a special oil pump depending on the application, e.g. an open type pump may be supplied for explosion proof installations, etc. Supply all pump data to West Hartford, Order Service Department. Contact West Hartford Order Service for pricing and delivery.

PRICES AND SPECIFICATIONS SUBJECT TO CHANGE WITHOUT NOTICE.
FOR TERMS OF SALE REFER TO LATEST REVISION OF FORM 1278
PRICES F.O.B. WEST HARTFORD, CONNECTICUT

EXHIBIT A-6

17448-1Q

FORM NO. [redacted]

EFFECTIVE

MARCH 1981

SUPERSEDES 17448-1P

DUNHAM-BUSH

BASE MOUNTED CENTRIFUGAL PUMP REPAIR PARTS LIST PRICES

PRICES AND SPECIFICATIONS SUBJECT TO CHANGE WITHOUT NOTICE.
FOR TERMS OF SALE REFER TO LATEST REVISION OF FORM 1278

REFER TO FORM 2507 FOR DESCRIPTION OF PARTS AND NUMBERS

PART NUMBER	LIST PRICE
860	$ 63.10
938	16.45
2420	146.00
2485	3.05
2679	25.30
2885	19.10
2886	40.45
2900	19.10
2919	45.45
2920	45.45
3065	26.55
3066	2.40
3077	18.10
3081	28.05
3086	44.70
3090	74.10
3099	10.10
3102	70.70
3104	6.45
	—
	—
3113	75.80
3114	85.85
3115	108.00
3116	133.00
3117	207.00
3118	268.00
3308	9.70
3315	8.35
A2-88	3.00
A2-89	3.00
A2-90	2.40
A2-91	9.80
A2-134	18.30
A2-135	.85
A2-146	15.15
A2-148	14.75
A2-1293	53.45
A2-1392	4.20
A2-1632	6.50
A2-1975	111.00
A2-2282	$ 60.60

PART NUMBER	LIST PRICE
A2-2393	73.25
A2-2395	2.65
A2-2418	31.05
A2-2432	78.40
A2-2591	26.85
A2-2809	27.50
A2-2810	21.05
A2-2974	2.05
A2-3094	82.40
A2-3194	32.85
A2-3731	11.00
B2-108	130.00
B2-121	80.95
B2-188	48.45
B2-1607	48.05
B2-1641	12.15
B2-1642	28.95
B2-1644	2.40
B2-1664	332.00
B2-1665	332.00
B2-1666	131.00
B2-1770	15.80
B2-1945	351.75
B2-1996	273.00
B2-1998	95.90
B2-2110	113.00
B2-2111	657.00
B2-2196	101.00
C2-73	276.00
C2-145	368.00
C2-176	95.90
C2-178	567.00
C2-180	437.00
C2-181	567.00
C2-181SS	687.00
C2-261	6.45
C2-322	299.00
C2-678	45.45
C2-903	53.15
C2-1718	413.00
C2-1756	621.00
C2-1774	626.00

PART NUMBER	LIST PRICE
C2-1892	$ 456.00
C2-2187	422.00
C2-2188	495.00
C6804	1.35
C8938	7.35
C10025	3.00
C10035	3.00
C10060	15.15
C10062	10.75
D2-49	295.00
D2-50	355.00
D2-64	404.00
D2-70	146.00
D2-84	146.00
D2-714	228.00
D2-715	195.00
D2-716	169.00
D2-717	152.00
D2-722	992.00
D2-723	1,183.00
D2-724	2,040.00
D2-725	2,107.00
D2-764	146.00
D2-765	1,011.00
D2-786	1,918.00
D2-789	1,262.00
D2-790	281.00
D2-793	1,516.00
D2-822	686.00
D2-859	1,238.00
D2-860	2,498.00
D2-946	1,153.00
D2-978	1,414.00
D2-1259	523.00
D2-C1116	1,222.00
D2-C1160	1,864.00
D2-C1184	1,930.00
D2-C1185	1,203.00
D5450	6.60
E6141	295.00

PART NUMBER	LIST PRICE
E6181	$295.00
E6188	295.00
E6204	295.00
ML5182	7.30
ML7750	9.20
ML7384	24.10
ML7385	31.60
ML7386	53.15
ML7387	70.70
ML7389	117.00
ML7411	70.70
ML7412	101.00
ML7770-1L	1,625.00
ML7770-1R	1,731.00
ML7770-2L	1,838.00
ML7770-2R	2,033.00
ML7770-3L	1,676.00
ML7770-3R	1,676.00
ML7770-4L	1,695.00

PART NUMBER	LIST PRICE
ML7770-4R	$1,823.00
ML7770-5L	1,625.00
ML7825	85.85
ML7829	255.00
ML7830	134.00
ML7831	195.00
ML7832	264.00
ML7833	339.00
ML7834	569.00
ML7835	791.00
ML7836	791.00
ML7837	257.00
P2	1.20
P5	1.20
P9	1.70
P122	1.20
P125	1.20
P128	1.20

PART NUMBER	LIST PRICE
P129	$1.20
P130	1.20
P131	1.20
P133	3.00
P137	1.20
P138	1.20
P139	1.20
P142	1.20
P143	1.20
P145	1.70
P150	1.20
P158	2.40
P161	16.85
P164	7.65
P167	4.85
P169	1.20
P170	14.00
P175	4.25
P176	4.25

FORM 6139B
SUPERSEDES 6139A AND 6139-2

Exhibit A-7

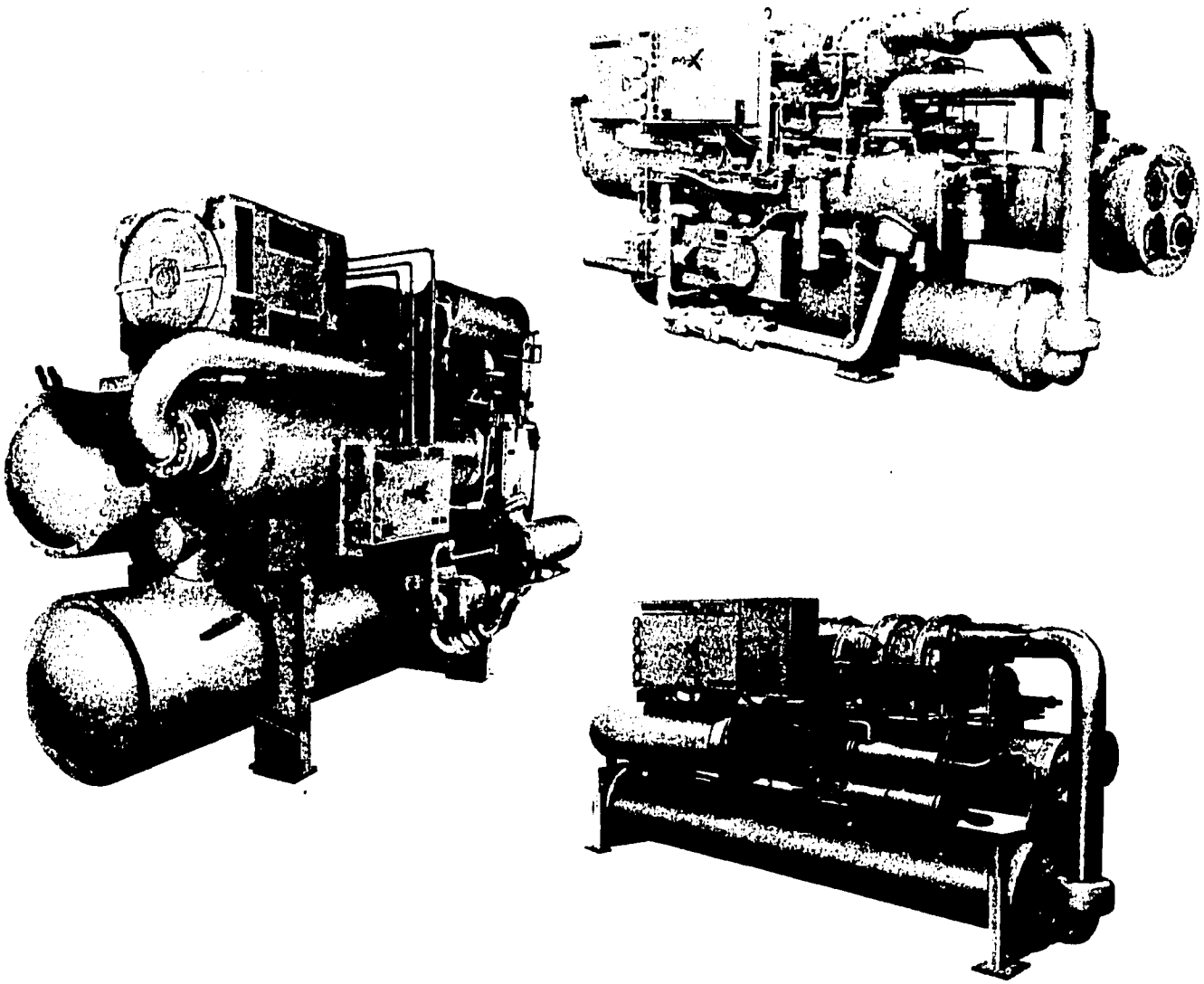

DUNHAM-BUSH

"PCX-H" "PCX-O" "PCX-OHR" & "IPCX" PACKAGED CHILLERS

DIRECT EXPANSION AND FLOODED TYPE UNITS

Installation, Operation and Maintenance Instructions

TYPICAL UNIT COMPONENTS

PCX-O PACKAGED CHILLER (DIRECT EXPANSION)

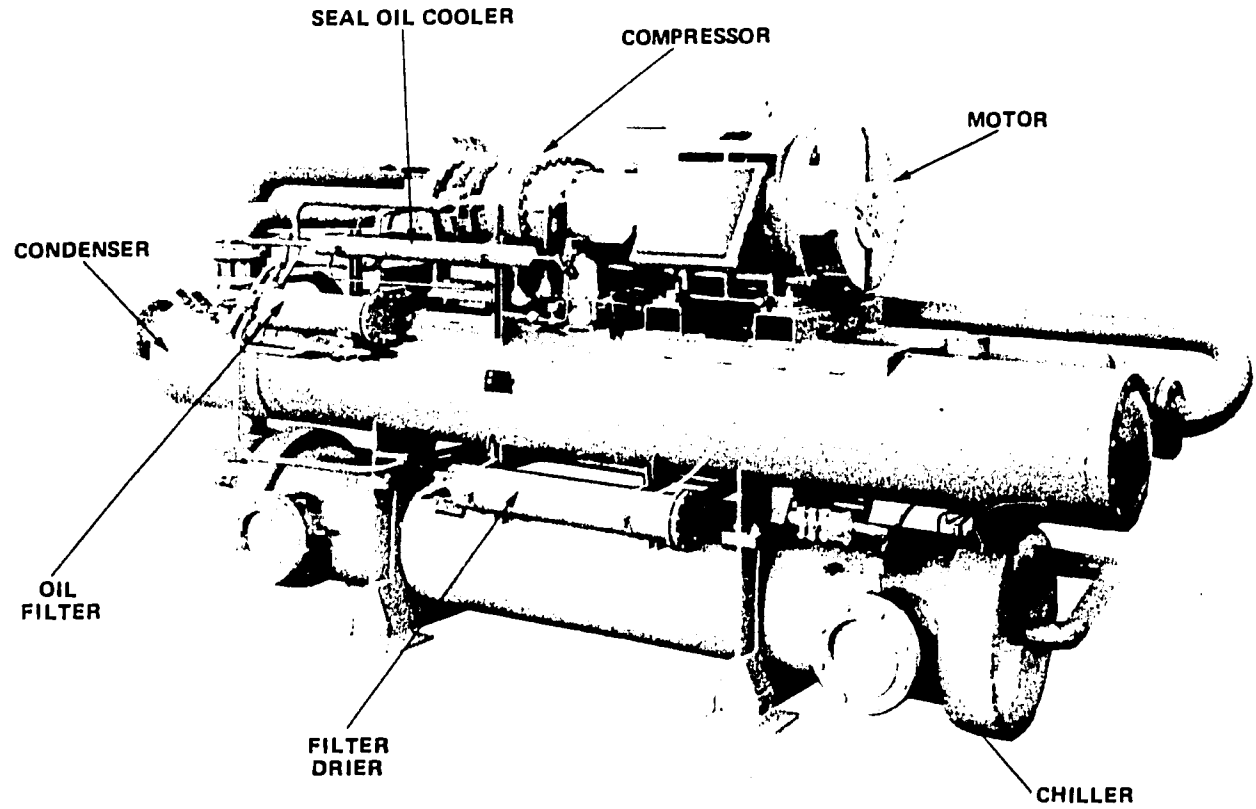

PCX-OHR HEAT RECLAIM PACKAGED CHILLER (DIRECT EXPANSION)

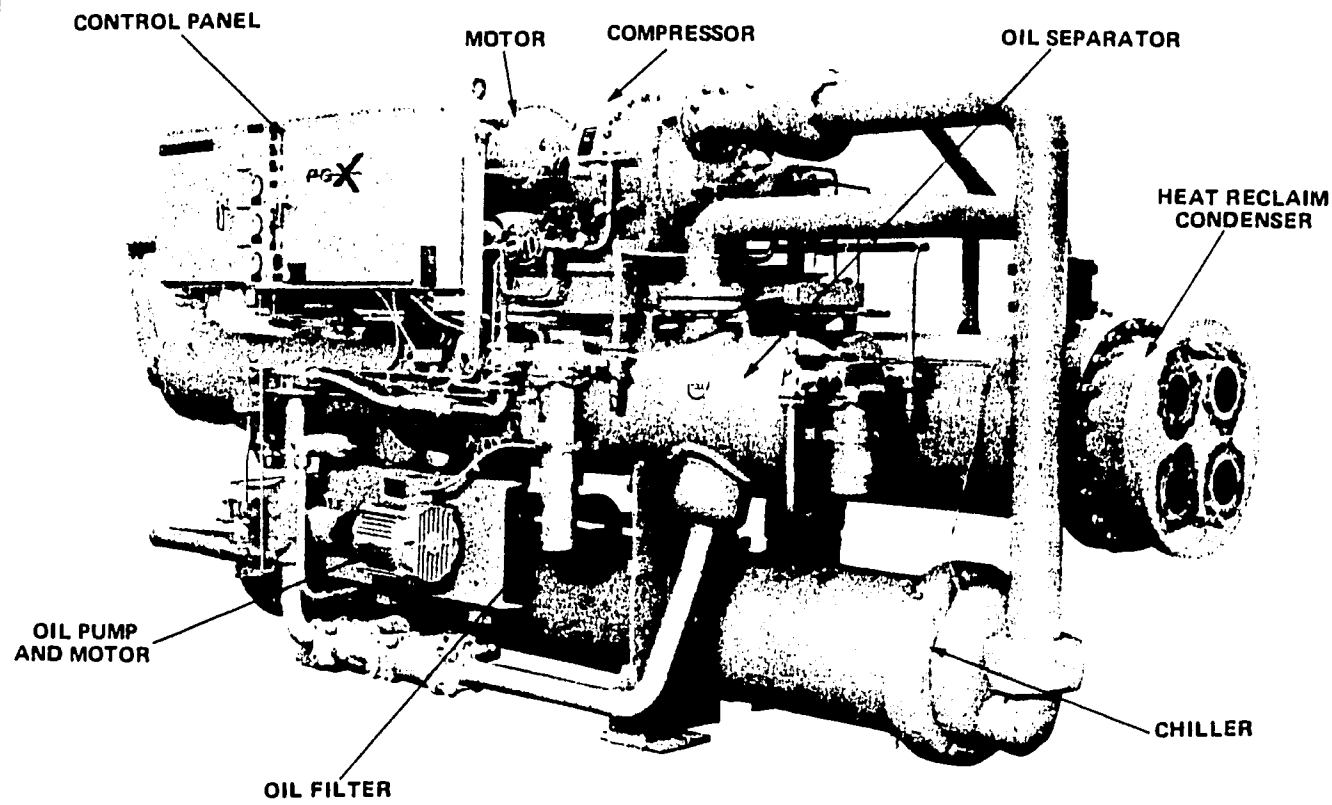

TYPICAL UNIT COMPONENTS

IPCX-O INDUSTRIAL PACKAGED CHILLER (DIRECT EXPANSION)

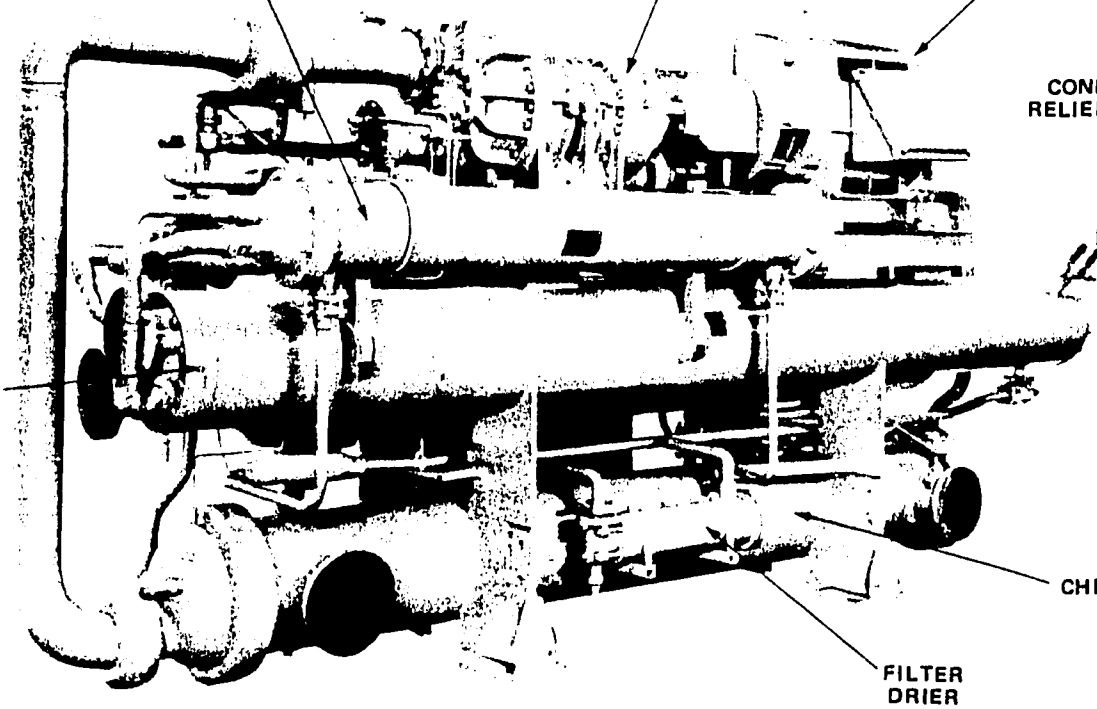

PCX-H HERMETIC PACKAGED CHILLER (DIRECT EXPANSION)

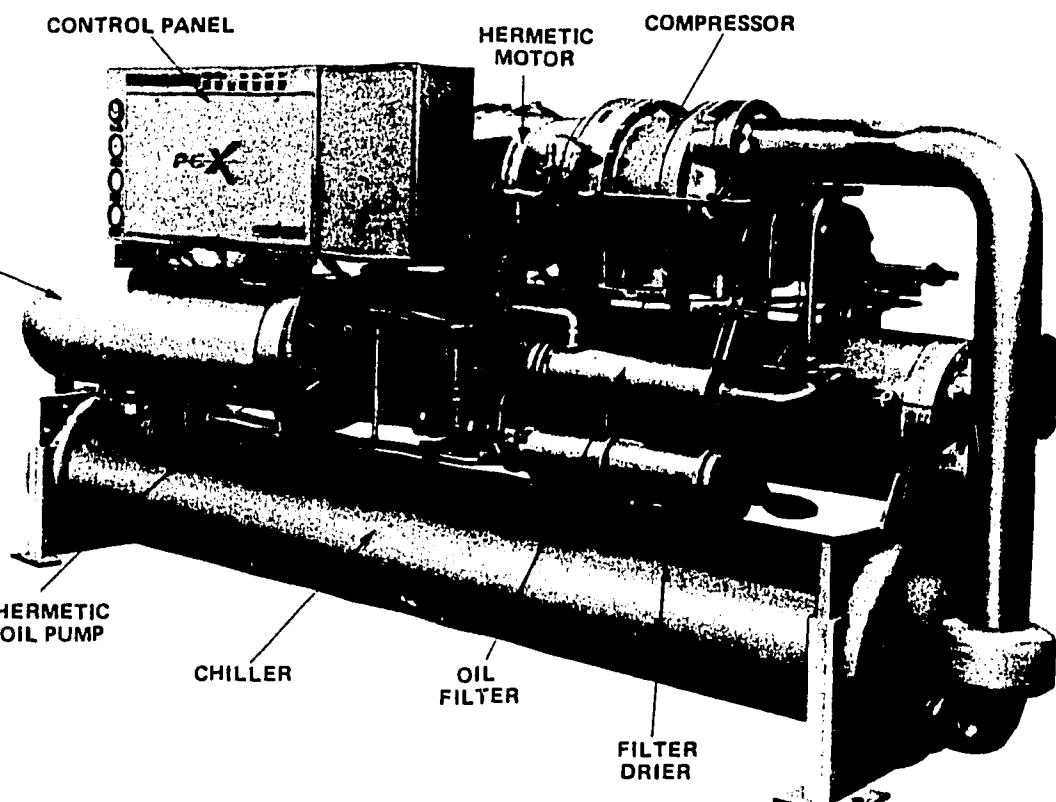

INDEX

TABLE OF CONTENTS

I. GENERAL INFORMATION — PAGE

A. Shipping 1
B. Receiving Inspection 1
C. Rigging and Moving 1

II. INSTALLATION

A. Location 2
B. Mounting 2
C. Leveling 2
D. Unmounted Accessories 2
E. External Connections 2-4
F. Request for Start-Up Representative . . . 4

III. OPERATION

A. General 5
B. Systems 6
C. Component Operation 7-12
D. Optional Subsystem Operation 12-13
E. Typical Piping Schematics 13-16
F. Function of Electrical Controls 17-20
G. Typical Electrical Schematics 21-26

IV. MAINTENANCE — PAGE

A. General 27
B. Periodic Maintenance 27-29
C. Maintenance Records 29-30
D. Oil Removal/Addition 31
E. Transferring/Evacuating/ Charging Refrig. 32-34
F. Component Maintenance 35-46
G. Optional Subsystem Maintenance 47
H. System Tests 48-51

V. TROUBLE SHOOTING

A. Trouble Shooting Chart 52-53

VI. APPENDIX

A. Daily Operating Log 54
B. Monthly Operating Log 55
C. Condenser Water Piping 56
D. Comp.Lubricating Requirements 57
E. Typical Information Labels 58-59

SERVICE PROCEDURES

NO.	PROCEDURE	PAGE
SP-1	*Oil Removal*	31
SP-2	*Oil Replenishment(Vacuum Method)*	31
SP-3	*Oil Replenishment(Pump Method)*	31
SP-4	*Relief Valve Access*	32
SP-5	*Service Valve Access*	32
SP-6	*Charging Valve Access*	32
SP-7	*Partial Pumpdown*	33
SP-8	*Liquid Refrig. Transfer*	33
SP-9	*Gas Refrig. Transfer from Chiller*	33
SP-10	*Liq. Refrig. Transfer from Condenser*	33
SP-11	*Gas Refrig. Transfer From Condenser*	33
SP-12	*Evacuation/Dehydration*	33
SP-13	*Initial Gas Refrig. Charging*	34
SP-14	*Liquid Refrig. Charging*	34
SP-15	*Adding to Refrig. Charge*	34
SP-16	*Compressor Coupling Alignment*	35
SP-17	*Oil Filter Replacement*	36
SP-18	*Coupling Alignment, Open Oil Pump*	37
SP-19	*Clearance Adjust., Open Oil Pump*	37
SP-20	*Maintenance, Hermetic Oil Pump*	37
SP-21	*Oil Pressure Relief Valve Adjust.*	38
SP-22	*Oil Pressure Relief Valve Assy.*	38
SP-23	*Replacement, Oil Sump Heaters*	38
SP-24	*Oil Cooler, Valve Adjustment*	40
SP-25	*Oil Cooler, Valve Flushing*	40
SP-26	*Seal Oil Cooler, Temp. Adjust.*	40
SP-27	*Condenser Cleaning, Mechanical*	41
SP-28	*Condenser Tube Plugging*	41
SP-29	*Filter Drier Replacement*	42
SP-30	*Superheat Adjustment*	43
SP-31	*Thermo-Expansion Valve Disassy.*	43
SP-32	*Disassy/Maintenance P.O.S. Valve*	44
SP-33	*Suction Filter Maintenance - In Line*	46
SP-34	*Suction Filter Maintenance - Head*	46
SP-35	*Hot Gas Bypass Adjustment*	47
SP-36	*Motor Insulation Resistance Test*	48
SP-37	*Refrigerant Leak Test*	49

DUNHAM-BUSH RESERVES THE RIGHT TO MAKE CHANGES IN SPECIFICATIONS AND DESIGN WITHOUT NOTICE.

REFERENCES *

TITLE	FORM NO.
PCX-H Hermetic Type Packaged Chillers 120 Thru 400 Tons	6039
PCX-O Open Type Packaged Chillers 120 Thru 350 Tons	6041
PCX-O Open Type Packaged Chillers 400 Thru 750 Tons	6041-2
PCX-OHR Open Type Heat Reclaim Packaged Chillers 85 Thru 330 Tons	6058
DBX Compressor Service Manual	6136
PCX Hermetic Packaged Chiller Templates	6239-1 Thru 6
PCX-O Open Type Packaged Chiller Templates	6241-1 Thru 8
Motor Starter Specifications	6236
Receiving Inspection Report	9214
Request for Authorized Start-Up Representative	9180
Daily Operating Log	9198
Monthly Operating Log	9198-1

*THESE FORMS ARE AVAILABLE AT THE LOCAL DUNHAM-BUSH SALES REPRESENTATIVE'S OFFICE.

INTRODUCTION

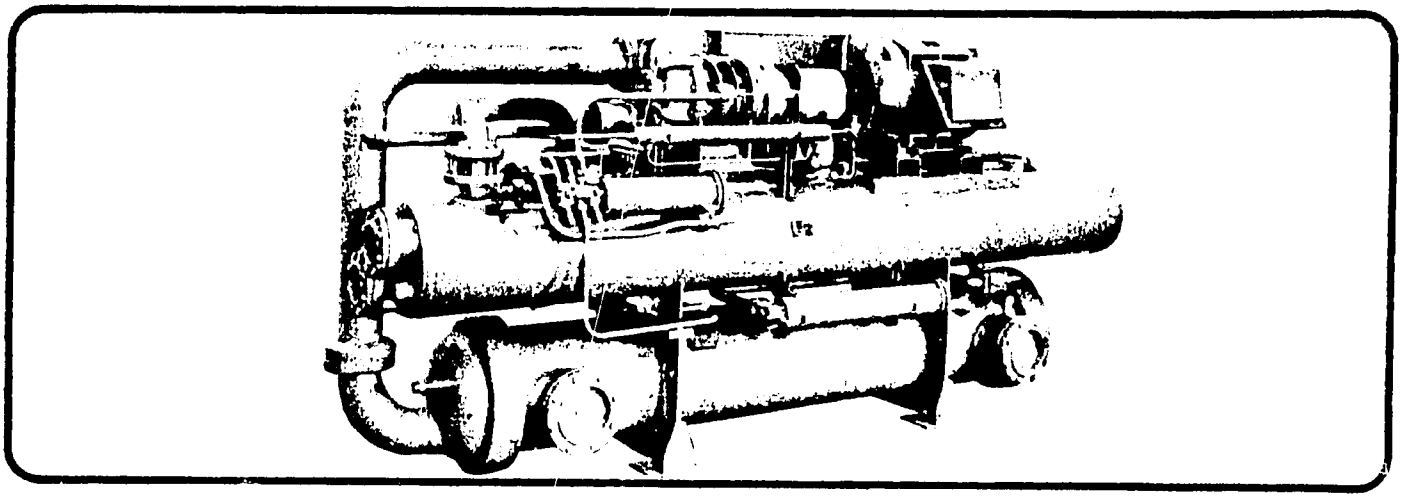

Each unit was designed to meet specific criteria and must be operated within conditions specified when ordered.

Fluorocarbon refrigerant must be handled with caution and release to the atmosphere should be minimized. Instructions for charging and retrieving refrigerant from these units can be found in the maintenance section of this manual.

These instructions and the drawings supplied with the PCX Unit must be followed carefully to insure proper installation, operation, and maintenance.

This manual is written and illustrated for a single PCX Unit installation. For instructions concerning a multiple unit installation, consult Dunham-Bush, Inc.

WARNING

Valves or connections which can cause loss of the factory installed refrigerant charge and lubricating oil charges shall not be opened under any conditions. The system shall not be dismantled or opened during installation except under the supervision of a Dunham-Bush, Inc., Authorized Service Representative.

The PCX Unit shall NOT be started following installation except under the direct supervision of a Dunham-Bush, Inc., Authorized Service Representative.

Warning tags attached to the unit should not be removed either prior to or after installation.

Compliance with the above is mandatory in order that the warranty shall not be jeopardized. All contacts with Dunham-Bush, Inc., regarding requests for information, service, or parts should be made to the nearest sales office.

DUNHAM-BUSH RESERVES THE RIGHT TO MAKE CHANGES IN SPECIFICATIONS AND DESIGN WITHOUT NOTICE.

I. GENERAL INFORMATION

A. SHIPPING

The unit is shipped with skids and lifting arms attached for ease in rigging. Refrigerant and oil systems are fully charged. Chiller and condenser water connections have covers to prevent contamination of the vessels. Check the unit nameplate to be sure the power supply meets the unit requirements. The wiring diagram number and type of refrigerant can also be found on the unit nameplate.

B. RECEIVING/INSPECTION

The unit should be inspected immediately, in the presence of the carrier's representative, for any evidence of damage during shipping. Any damage should be noted on the carrier's delivery receipt before it is signed. A damage claim should then be filed by the purchaser against the delivering carrier as all shipments are made at the purchaser's risk. The receiving inspection report (Form 9214), sent with the installation instructions, should also be filled out at this time and forwarded to the Dunham-Bush, Inc., National Service Department, West Hartford, CT. 06110.

C. RIGGING AND MOVING

Riggers and installers must use every precaution to prevent damage while moving the unit from the point of shipment to its permanent location. Pushing, pulling or climbing on any of the unit components or piping can easily create damage that will result in costly repairs of leaks and malfunctioning components. The only places it is safe to apply hoisting, jacking, pushing, or pulling forces are to shipping skids and lifting arms. Cables are to be attached only to the lifting arms, spreaders must be used with the lifting cables to prevent damage to the unit.

Skidding may be done directly on the shipping skids or on properly spaced rollers under the skids. Pushing and pulling should only be directed against the skids and lifting arms.

II. INSTALLATION

A. LOCATION

The location of the unit may be any foundation or deck that is generally level within 1/8 of an inch and structurally capable of supporting the weight of the unit. A cleared area should be left around the unit to aid in operation, maintenance and removal of components. See references (packaged chiller templates) to obtain minimum clearance requirements.

B. MOUNTING

Resilient pads are provided for installation under the mounting legs. For critical installations, Dunham-Bush, Inc., can provide whatever type of vibration isolator the customer specifies. They must be installed and adjusted in accordance with the isolator manufacturer's instructions. The unit may be cemented or lagged to the foundation if desired.

C. LEVELING

When the unit is at its final location, it should be jacked or hoisted, by the lifting arms, the shipping skids removed and the unit let down on the isolator equipment supplied (felt pads or vibration isolators). It should then be checked for level longitudinally at the top center of the condenser shell and laterally across the compressor motor feet. Steel shims should be installed under the isolator pads, if necessary to level the unit.

D. UNMOUNTED ACCESSORIES

A chiller flow switch, which is shipped in a separate container accompanying the unit, must be installed in the external chilled water outlet piping. It must be located in a horizontal section on the pipe where there is at least five (5) pipe diameters on both sides of the flow switch before any other connections, as indicated in Fig. 1. The flow switch paddle must be adjusted to the size of pipe in which the paddle is installed, and the switch set to trip at approximately 50% of the design flow. Consult the wiring diagram accompanying the unit for the electrical connections to interlock the flow switch with the control panel.

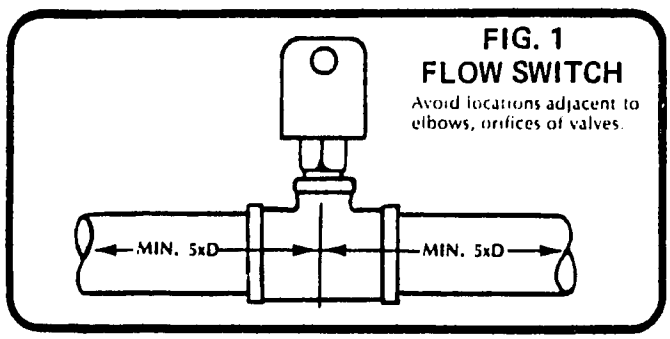

FIG. 1
FLOW SWITCH
Avoid locations adjacent to elbows, orifices of valves.

E. EXTERNAL CONNECTIONS

1. **Water Connection**

After the unit has been leveled, the external water piping to the chiller and condenser may be made up. Air vent valves should be installed at all high points to bleed the system of entrapped air. Drain valves or plugs should be installed at low points to gravity drain the system. The unit drain plugs for the chiller, condenser and oil cooler (if equipped) must be installed prior to filling the system. Insulation should be installed on all external piping to prevent sweating and if the chiller (vessel) and associated piping was not equipped with the optional factory insulation, it too must be insulated.

All external plumbing should have manual shut-off valves installed near the unit for ease in servicing and maintenance. Strainers should also be mounted in the piping before the unit to prevent dirt and other contaminants from entering and damaging the unit and its satellite equipment.

The external plumbing must be carefully located and adequately supported by pipe hangers to prevent twisting or bending stresses on the unit when the flanges or grooved pipe connections are bolted. It is recommended that flanged elbows be used at the connection to the condenser so that the external piping will not interfere with servicing of the condenser tubes. Flexible connections on water lines throughout the machinery room are recommended for chiller and condenser piping, where sound or vibration transmission may be a problem.

Following make up of the external plumbing, a check should be made for piping stresses at the PCX unit, as follows: Remove condenser and chiller connecting bolts. If any bolts are misaligned, adjust external piping or hangers to properly align the connections. If it is necessary to reshape and anneal the external piping, the inside of the piping must be cleaned of the resulting scale before reassembly. The piping should then be thoroughly flushed to remove all foreign material, connected to the unit, filled, vented and tested for leaks.

PCX units are designed for a fixed evaporator water flow, and means should be employed to assure a relatively constant flow at all loads.

E. EXTERNAL CONNECTIONS CONTINUED

2. Water Treatment

Most industrial water supplies contain dissolved or suspended materials which cause scale formation, corrosion, and propagate slime, algae, etc. It is strongly recommended that a water treatment specialist be consulted for additive systems to counteract or prevent the damages caused by these impurities.

Cooling towers and evaporative water coolers experience a constant loss of water due to evaporation. Since evaporation is a distillation process, an increasing concentration of suspended and dissolved impurities occurs. This increase of impurities can be greatly reduced by a bleed-off system which will constantly bleed off the contaminated water and replace it with fresh water through the sump float valve.

Chemical water treatment in addition to the bleed-off system will probably be necessary. The correct rate of water bleed-off and the proper chemical treatment should be determined by a specialist familiar with the local water characteristics. A daily check and periodic inspections should be made to be sure the correct bleed-off rate and chemical treatment is maintained. Do not underestimate the importance of daily logged readings of condensing pressure, water temperatures, oil cooler water (when supplied) and oil temperatures in determining the condition of the heat transfer surfaces, and the effectiveness of the water treatment.

NOTE: Consult manufacturer for information concerning design, installation and operation of the cooling tower or evaporative water cooler.

WARNING: Dunham-Bush, Inc., will not be liable for any damage or failure resulting from the physical or chemical properties of the condenser water used in this equipment.

NOTE: Local codes may require the relief valve piping piped away from the unit.

3. Electrical Connections

The unit is completely wired at the factory prior to delivery. The connections which must be made by the installer are listed below. Each circuit must have adequate control and protection devices incorporated in it in accordance with the National Electric Code and/or other applicable codes in the area in which the unit is installed. The voltage, frequency and phase must be in accordance with that shown on the unit nameplate, and within 1% voltage imbalance. Flexible conduit should be used where vibration may be a problem. All wiring must be in accordance with the wiring diagram furnished with the unit, the National Electrical Code and any local codes that may apply. Any deviations from the above requirements must have the prior approval of Dunham-Bush, Inc. Customer supplied starters for the compressor motor must be in compliance with the latest revision of Dunham-Bush, Inc., Engineering Specification No. ELC-ES-9 which is available from the local Dunham-Bush, Inc., sales representative's office under Form No. 6236 or as individually approved in writing by Dunham-Bush, Inc. A starter interconnection wiring diagram can be found in the Operation Section of this manual.

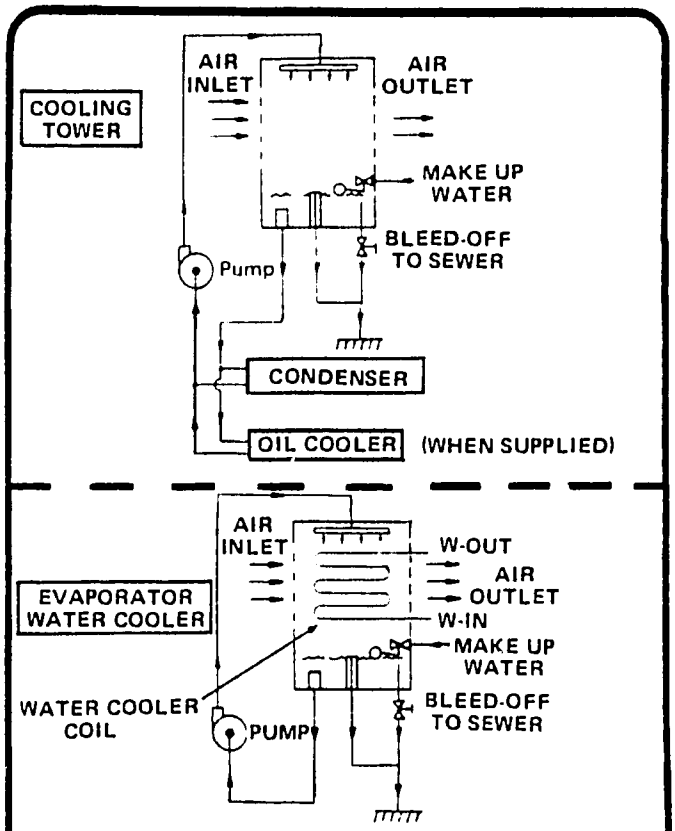

FIG. 2 TYPICAL BLEED-OFF SYSTEMS

The following external wiring is to be provided by the installer:

a. Power supply to compressor motor starter with circuit protection, and from starter to compressor motor.

b. Power supply to oil pump motor contactor or starter with circuit protection.

c. Chilled water pump auxiliary contacts to control panel.

d. Condenser water pump starter control circuit to control panel.

e. Compressor motor starter control circuit to control panel.

f. Compressor motor overload circuit to control panel.

g. Load limiter wiring from starter to control panel.

h. A properly sized control transformer or 120V/60 HZ./1PH power supply to control panel, with circuit protection.

Flow Switch to control panel.

4a. Mounting and Leveling

☐ Erected on foundation . . . in accordance with construction and electrical drawings supplied to the customer and requirements of this manual.

☐ Spring isolators or pads, installed, and the unit leveled . . . in accordance with isolator manufacturer's instructions and the requirements of this manual.

E. EXTERNAL CONNECTIONS CONTINUED

4b. Water Piping

- ☐ Condenser cooling water piping installed between condenser, pumps and cooling tower or well . . . as specified in this manual.
- ☐ Chilled water piping installed between chiller, pumps, and terminal equipment . . . as specified in this manual.
- ☐ Make-up and fill lines installed to cooling tower and chilled water system . . . and chemical treatment and bleed-off systems as needed.
- ☐ Thermometers,air vents, drain plugs and pressure gauges installed in chilled and condenser water inlet and outlet lines.
- ☐ Flow switch installed in outlet chilled water line and adjusted to a minimum of 50% flow.
- ☐ All water piping checked for strain . . . as specified in this manual.
- ☐ Water piping leak tested, flushed and vented, water strainers checked after flushing to be certain they are not clogged.
- ☐ Chiller and condenser water flow available from supply in sufficient quantity to meet unit design requirements. . . . and with adequate water treatment.

4c. Electrical Wiring

- ☐ Power supply available . . . with circuit protection and in accordance with the requirements on the unit nameplate and this manual.
- ☐ Wiring completed from power supply through circuit protection in accordance with the drawing supplied and the requirements of this manual.
- ☐ Wiring completed from power supply to circuit protection for oil pump motor in accordance with the wiring diagram and the requirements of this manual.
- ☐ Wiring completed from power supply through circuit protection to 115V control circuit in unit control panel (or through 115V transformer to control circuit) . . . in accordance with the drawing supplied and requirements of this manual.
- ☐ Wiring from power supply through circuit protection to satellite equipment and interlocks wired to control panel in accordance with drawing supplied and requirements of this manual.
- ☐ Phasing correct for direction of rotation of all motors except compressor and oil pump motors . . . phasing of compressor and oil pump motor will be checked by Dunham-Bush, Inc. start-up representative.

4d. Conditions Required for Start-Up

- ☐ Load must be available for operation and testing . . . a refrigeration load adequate to cause normal operation of the unit MUST BE AVAILABLE.
- ☐ Competent representatives of the Allied Trades (electrical contractor, steam fitters, controls contractor, etc.) involved in the installation of this chiller must be at job site to correlate their portion of the work in starting, testing, and balancing this chiller.

F. REQUEST FOR START-UP REPRESENTATIVE

After the installation has been completed and checked, Form 9180 must be filled out and sent to the National Service Department of Dunham-Bush, Inc. This Form is a request for the services of a Dunham-Bush, Inc. authorized start-up representative to perform the initial start-up of the Dunham-Bush chiller. The purchaser will have competent service, and operating personnel in attendance to assist in the work involved, and also to be trained in the service and maintenance of this chiller. (During the warranty period the manufacturer is responsible for parts only upon proof of defective workmanship or manufacture).

Following receipt of this signed form, a representative will be sent to the customer. He will inspect the installation to determine whether it meets Dunham-Bush, Inc. requirements, perform the initial start-up of the installation to determine whether it is in satisfactory operating condition, and instruct the specified customer personnel in its operation and maintenance for the length of time specified in the purchase contract.

NOTE:

Sump oil heaters should be energized a minimum of 24 hours prior to arrival of start-up representative. On hermetic compressors, the motor housing heaters should also be energized a minimum of 24 hours and the oil sump temperature must be at a minimum of 100°F (38°C) prior to arrival of start-up representative. This will insure that the oil is warm enough to vaporize any refrigerant in the oil and is in the normal operating temperature range.

III. OPERATION

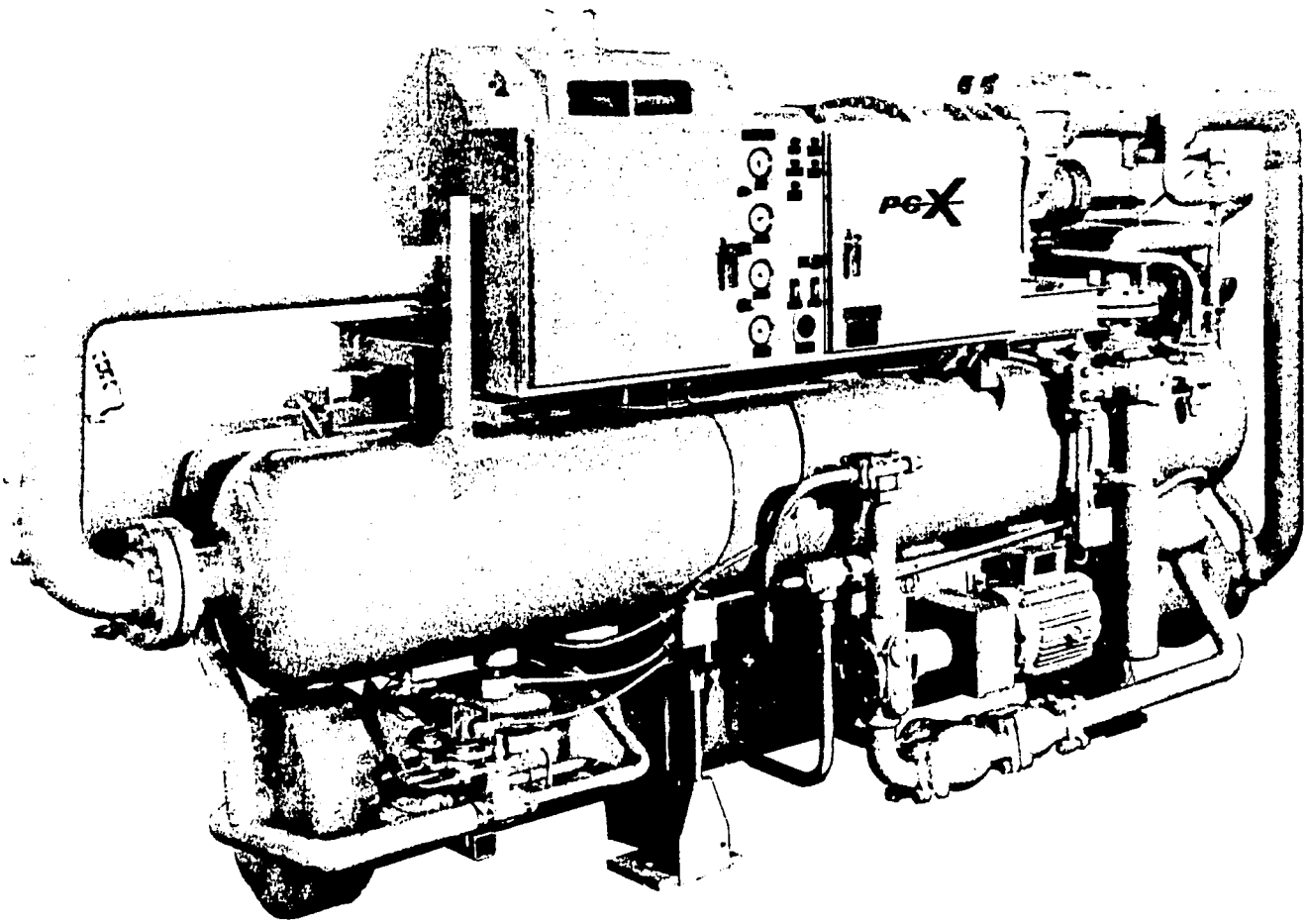

IPCX-O DIRECT DRIVE PACKAGED CHILLER

A. GENERAL

WARNING: The compressor and oil pump are NOT to be started initially except under the direct supervision of an Authorized Dunham-Bush, Inc. Start-Up Representative. Be sure that oil sump heaters and motor housing heaters (if the unit is hermetic) are turned on for a minimum of twenty-four hours prior to initial start-up. Couplings and motors have been aligned with the compressor at the factory. During shipment they may become misaligned. Alignment and motor pinning at initial start-up must be done by a Dunham-Bush, Inc. Start-Up Representative.

While this unit is greatly simplified and incorporates features to protect it against damage, it does represent a considerable investment and deserves the attention and care normally given to any fine piece of equipment. Reliable and economical operation will be achieved if the instructions in this manual are followed.

CAUTION: Operate this equipment in accordance with the instructions of this manual. DO NOT alter control settings to other than those specified on the wiring diagram accompanying the unit.

This equipment has been tested prior to shipment and found satisfactory for the conditions under which it was sold. Operation in excess of these conditions will subject this equipment to stresses for which it was not designed. Failure to heed this warning may result in injury to operating personnel and may jeopardize the warranty under which the equipment was sold.

III. OPERATION

B. SYSTEMS

1. REFRIGERANT SYSTEM

The PCX packaged chiller may have either a direct expansion or flooded chiiler depending on the capacity of the unit. A simple flow diagram as depicted in Fig. 3 and 4 indicates the principle parts of a basic refrigeration

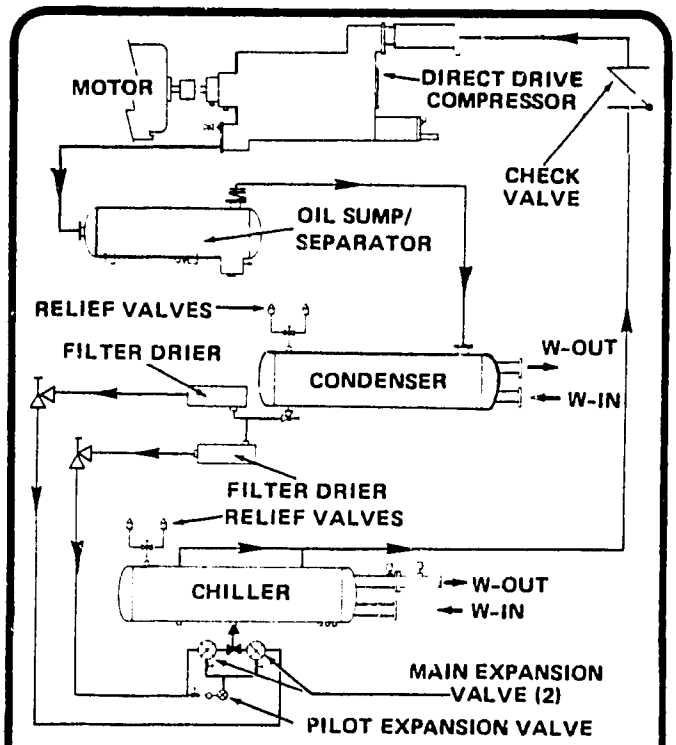

FIG. 3 TYPICAL FLOODED PCX-O

cycle. The compressor takes the refrigerant gas at low density and compresses it to a higher density. The temperature of the refrigerant gas is also increased. The dense refrigerant gas flows to the condenser where heat is removed, causing a change in the state of the refrigerant from a gas to a liquid. The refrigerant in a liquid state then flows through the filter/drier, through an expansion valve which meters the refrigerant into the evaporator chiller. There it changes its state back to a gas as it absorbs heat and evaporates. It is during this change of state that the refrigerant will extract heat from the medium being cooled. This low density cool gas then flows to the compressor where the cycle is repeated.

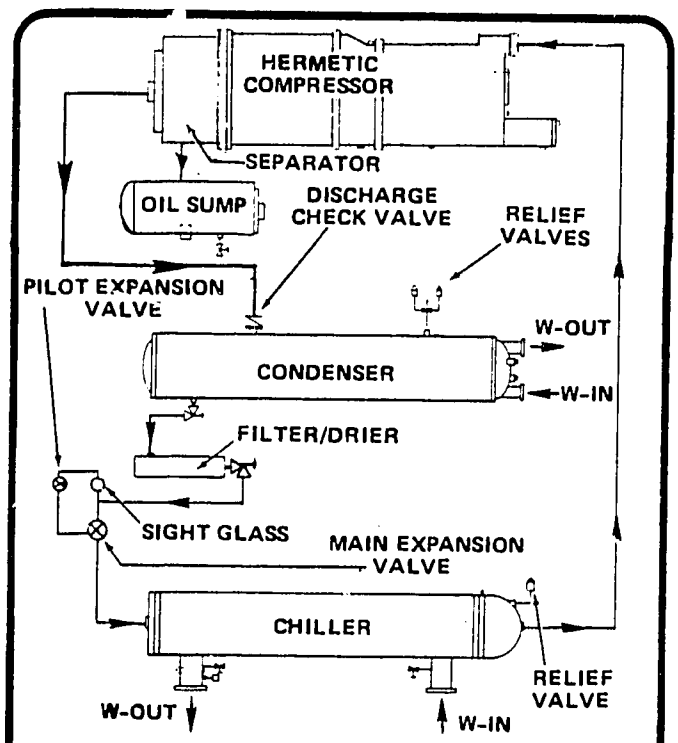

FIG. 4 TYPICAL DIRECT EXPANSION PCX-H

Operation of specific components within the refrigerant system may be found under System Components Section.

2. WATER SYSTEMS

The condenser water system on a PCX unit is an open end system and the water in the system is used to condense hot refrigerant gas into a liquid. Water is pumped through the tubes of the condenser where it picks up heat condensing the refrigerant. It then flows to a water tower, evaporative water cooler, or other cooling service, where the heat is dissipated to the atmosphere. Cooled water is picked up here and is pumped to the condenser to absorb more heat from the refrigerant.

Some units have water cooled oil coolers. The water used to cool the oil is either diverted from the input of the condenser to the oil cooler or is supplied from an exterior source. A thermally actuated valve monitors the leaving oil temperature and modulates the water flow through the cooler.

The condenser for heat recovery units is constructed with two entirely separate water circuits. Hot gas from the compressor is discharged to the condenser where the heat is absorbed by either one of the water circuits or both simultaneously, depending on the building requirements. The heat reclaim condenser features the split system to prevent contamination of the heating circuit, associated piping, and heating coils from the cooling tower water which may absorb dirt, chemicals or corrosives.

The chilled water system is a closed system and the flow pattern varies for a flooded system versus a direct expansion system. Both systems use shell and tube heat exchangers, but in a flooded system the water is pumped through the tubes while a direct expansion system, water is pumped through the shell. As the chilled water leaves from either of these systems it is monitored by electronic arrangement which controls the operation of the unit. The chilled water then flows to the cooling coils where it picks up heat from the space or item being cooled. The water is then circulated back to the pump and chiller.

Operation of specific components within the refrigerant system may be found under the Component Operation Section.

3. LUBRICATING SYSTEM

The oil in a PCX system is used to lubricate the compressor and is additionally used to dissipate heat generated within the compressor, provide a seal between the male and female rotors during compression of the refrigerant, as a hydraulic medium for capacity control, and to provide quite operation.

There are a number of variations of lubricating systems. The choice of each system is dependent upon the type of unit and its purpose. Operation of these systems can be found in the Component Operation Section.

III. OPERATION

C. COMPONENT OPERATION

1. COMPRESSOR/MOTOR ASSEMBLY

The PCX-H compressor motor is hermetically sealed and is directly connected at the compressor outlet so that both the compressed refrigerant and lubricating oil cool the motor windings. Temperature sensors are embedded in the motor windings to monitor the temperature for the motor protection system. The PCX-O compressor motor is air cooled and is connected to the compressor by a flexible coupling.

The compressor used on the Dunham-Bush, Inc., packaged chiller is a positive displacement, helical-axial flow compressor designed for use with high pressure refrigerants. Unlike centrifugal compressors, no purge system is needed.

For clarity reasons, the following account of the PCX compressor operation will be limited to one lobe on the male rotor and one interlobe space of the female rotor. In actual operation, as the rotors revolve, all of the male lobes and female interlobe spaces interact similarly with resulting uniform, non-pulsating gas flow.

1a. Suction Phase

As a lobe of the male rotor begins to unmesh from an interlobe space in the female rotor, a void is created and gas is drawn in through the inlet port - Fig. 5 - as the rotors continue to turn the interlobe space increases in size - Fig. 6 - and gas flows continuously

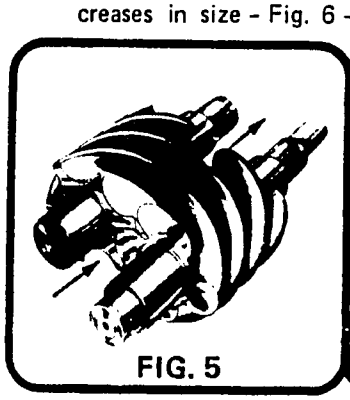

FIG. 5

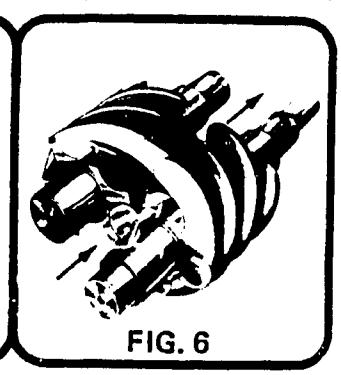

FIG. 6

into the compressor. Just prior to the point at which the interlobe space leaves the inlet port, the entire length of the interlobe space is completely filled with drawn in gas - Fig. 7.

1b. Compression Phase

As rotation continues, the gas in the interlobe space is carried circumferentially around the compressor housing. Further rotation meshes a male lobe with the interlobe space on the suction end and squeezes (compresses) the gas in the direction of the discharge port. Thus the occupied volume of the trapped gas within

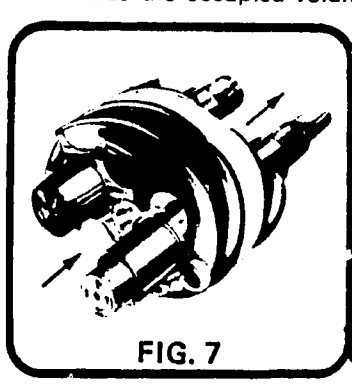

FIG. 7

FIG. 8

the interlobe space is decreased and the gas pressure consequently increased.

1c. Discharge Phase

At a point determined by the designed "built-in" compressor ratio, the discharge port is uncovered and the compressed gas is discharged by further meshing of the lobe and interlobe space - Fig. 8. While the meshing point of a pair of lobes is moving axially, the next charge is being drawn into the unmeshed portion and the working phases of the compressor cycle are repeated.

1d. Capacity Control

Compressor vapor displacement is controlled to balance the flow rate of liquid refrigerant entering the evaporator with the changing cooling demand.

The capacity control valve is located in the rotor housing as shown in Fig. 9 and 10. The movement

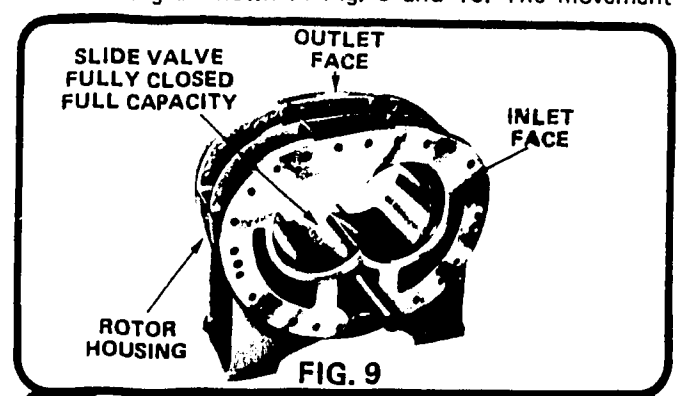

FIG. 9

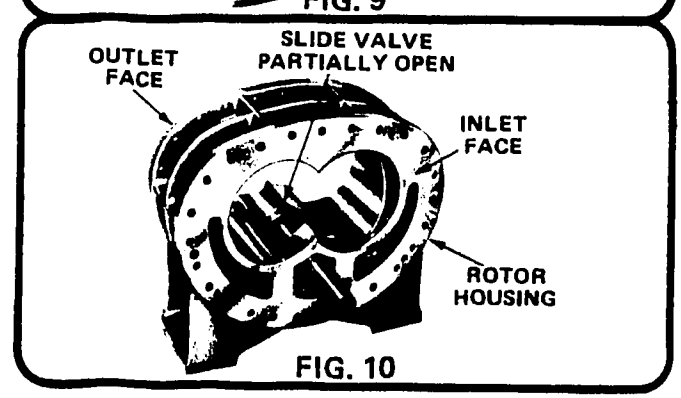

FIG. 10

of this valve along the axes of the rotors is programmed by a solid state, temperature initiated, hydraulically actuated control arrangement. When the compressor is fully loaded the slide valve is in the closed position against the valve stop as shown in Fig. 9, and all gas flows through the rotor housing as described previously. When the compressor starts to unload, as shown in Fig. 10, the compressor slide valve will move away from the valve stop. The movement of the slide valve creates an opening in the bottom of the rotor housing through which suction gas can pass back to the inlet port. As no significant amount of work has been done on the returned suction gas, no appreciable losses have been incurred. Reduced capacity is obtained from the gas remaining in the interlobe, which is compressed in the ordinary manner. In principle, as the opening in the rotor housing is enlarged the compressor displacement is reduced. Optional capacity control system information can be found under Optional Sub-System Operation.

III. OPERATION

C. COMPONENT OPERATION CONTINUED

CAPACITY CONTROL

1e. The temperature load controller (TLC) supplies power to the load solenoid valve (LSV) and unload solenoid valve (USV) to control the position of the compressor slide valve piston. Control is achieved electronically by a monitoring leaving chilled water temperature. The TLC will always act to meet a specific load demand and stabilize unit operation.

LEGEND: LTV - Load Throttling Valve; UTV - Unload Throttling Valve; SOV - Shut Off Valve; FUSV - Fast Unload Solenoid Valve; USV - Unload Solenoid Valve; LSV - Load Solenoid Valve; ■ Refrigerant Gas; □ Refrigerant Oil

COMPRESSOR LOADING

- **LOADING**

When energized, the load solenoid valve (LSV) opens and discharge pressure pushes the slide valve towards load, forcing oil out of the cylinder into the suction housing. Piston speed is controlled by an adjustable restrictor valve located in the oil line.

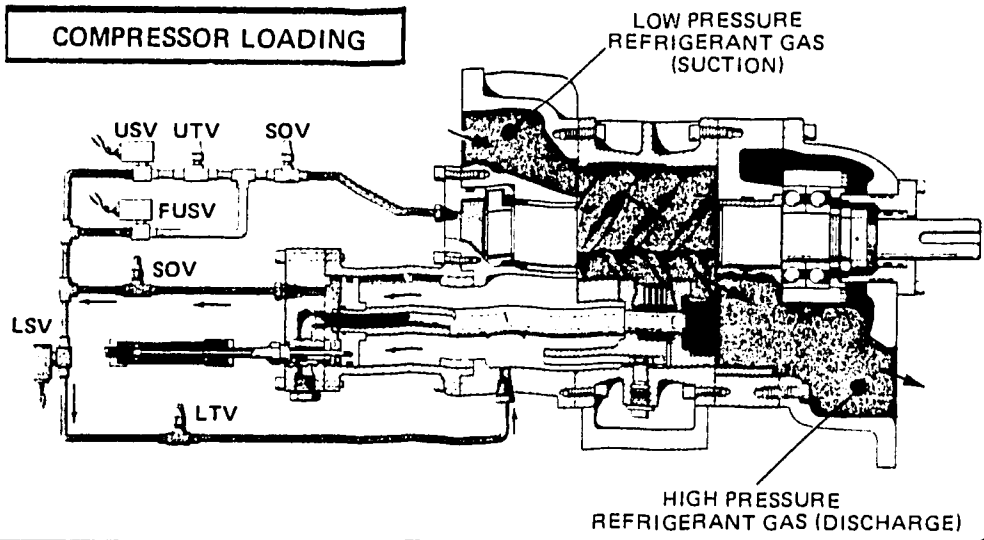

COMPRESSOR UNLOADING

- **UNLOADING**

When energized, the unload solenoid valve (USV) opens. The combination of discharge plus oil pressure on the slide valve piston will move the slide valve toward the unload position. Piston speed is controlled by an adjustable restrictor valve located in the oil line.

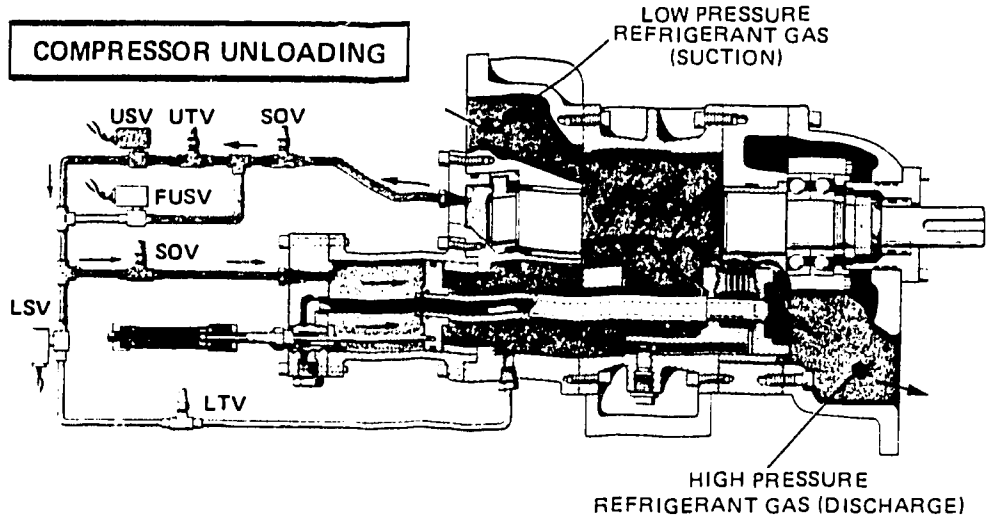

COMPRESSOR PART LOAD

- **PART LOAD**

The unit will remain in the part load position as long as the leaving chilled water temperature remains at the desired temperature. Both load and unload solenoid valves will be closed and the piston will be stationary at the part load position.

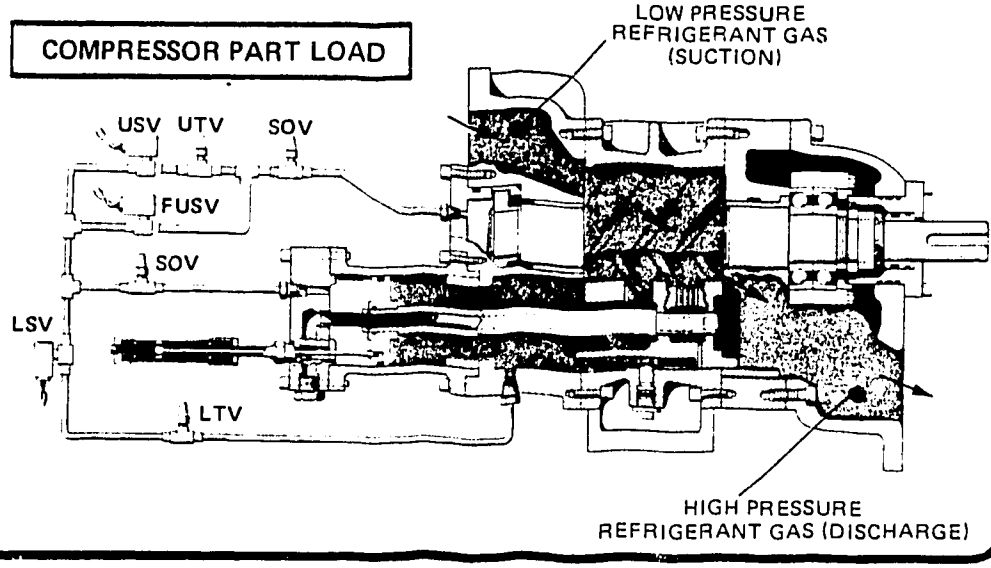

2. LUBRICATION SYSTEM OPERATION

2a. Oil Separation and Collection

Prior to entering the condenser, the discharge refrigerant vapor and the oil are mechanically separated. The oil/vapor mixture is discharged from the compressor to a separator, or combination sump/separator (depending upon the unit model). A liquid injection arrangement controlling discharge temperature at the compressor insures the proper conditions necessary for efficient oil separation.

- **Hermetic Units** - Units featuring a hermetic compressor have an oil separator mounted at the compressor discharge and the oil drains into a separate sump. The separator is constructed with a knitted mesh wire wound on a perforated metal mandrel. The oil droplets collect on the wire mesh and are drained into the oil sump. The discharge refrigerant vapor is piped from the separator directly to the condenser.

- **Open Drive Units** - Units featuring a direct drive compressor incorporate a combination oil/sump separator in a single vessel. The upper portion of the shell contains mesh beds which serve to remove the oil from the discharge vapor. The bottom portion of the shell acts as a sump for the collected oil. The discharge refrigerant vapor is piped from the upper portion of the sump/separator to the condenser.

- **Oil Sump Heaters** - Electric resistance heaters are located in the lower portion of the sump vessel and serve to vaporize excess refrigerant that may have diluted the oil during shut-down, and heat the oil to a suitable temperature for start-up. Normally the heaters must be energized a minimum of 24 hours and the oil sump temperature must be at a minimum of 100°F (38°C) prior to start-up of the unit.

- **Oil Sump Sight Glasses** - Sight glasses are provided in the sump vessel to monitor the oil level. When the unit is shut-down and the oil is at design discharge temperature, the normal oil level is 1/2 to 1/3 visible in the (top) sight glass.

2b. Oil Pumps

A gear type oil pump is used to provide oil at sufficient pressure to lubricate the compressor and actuate the capacity control slide valve. The pump may be either hermetic or open drive, depending on the unit application.

- **Hermetic Oil Pump** - The hermetic oil pump and motor are located within the oil sump vessel utilizing the oil to cool the motor windings. Thermal switches imbedded in the motor windings are interlocked with the control panel and serve to protect the motor from overheating. To avoid circulation of solid contaminants, a 100 mesh strainer is located at the pump suction. A pressure relief valve located on the discharge side of the pump inside the vessel, is factory set and sealed for 53 psid (365 kPa) relief pressure.

- **Open Drive Oil Pump** - Located exterior of the oil sump, the open pump is coupled to a motor. To avoid circulation of solid contaminants, a 100 mesh strainer is located at the pump suction. Service valves and a check valve are provided for ease of maintenance.

2c. Oil Systems

There are two basic types of oil system piping arrangements used on packaged chillers that serve the compressor's lubrication and hydraulic purposes; a partially pumped system and a fully pumped system. Typical lubrication systems are shown in Fig. 11 thru 13.

NOTE: Net oil pressure is the oil pressure supplied to the bearings minus the discharge pressure at the compressor.

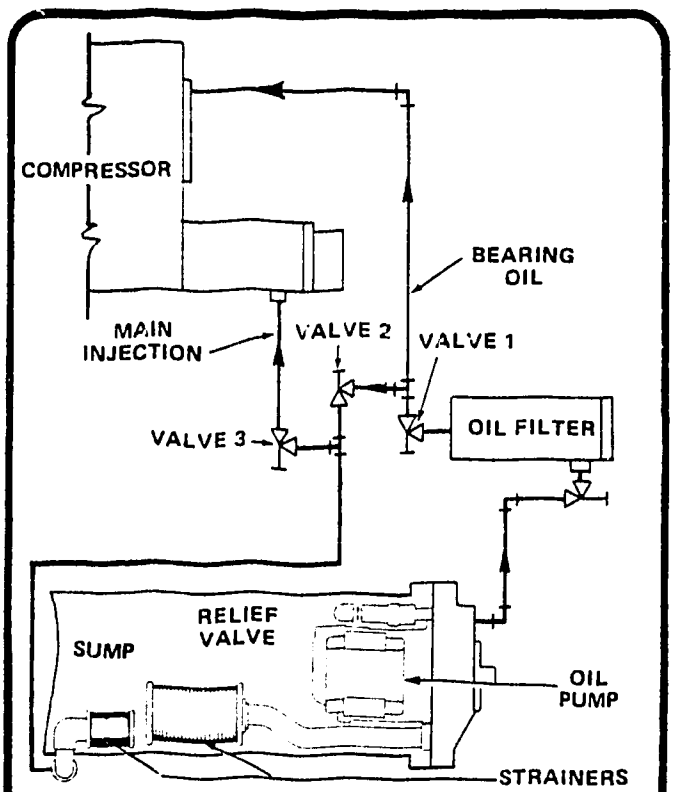

FIG. 11 - PARTIALLY PUMPED WITH HERMETIC OIL PUMP

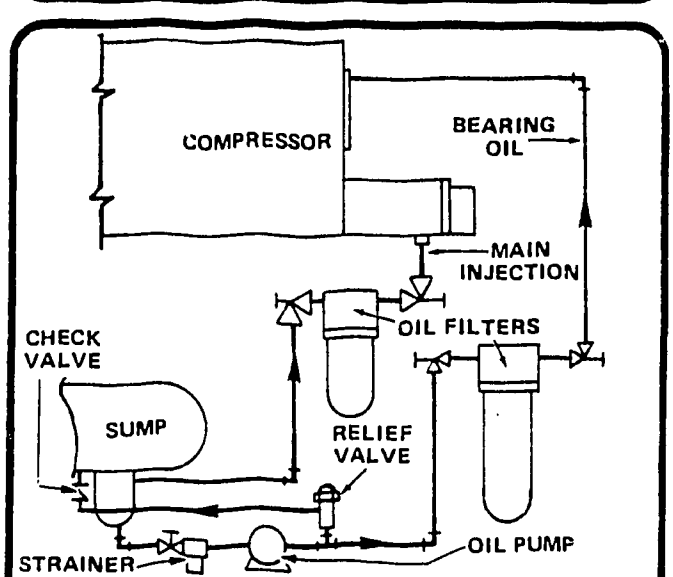

FIG. 12 - PARTIALLY PUMPED OIL SYSTEM WITH OPEN OIL PUMP

- **Partially Pumped Oil System** - In a partially pumped lubrication system, strained oil is pumped through an oil filter to a three valve manifold. Valve 'one' and valve 'three' as shown in Fig. 11 are strictly service valves and remain fully open. Valve #2 is used to adjust the required net oil pressure.

- **Fully Pumped Oil System** - Both injection and bearing oil are pumped in the fully pumped oil system. Net oil pressure is maintained by a regulating valve mounted at the oil pump discharge. The regulating valve may be adjusted to obtain the required net oil pressure.

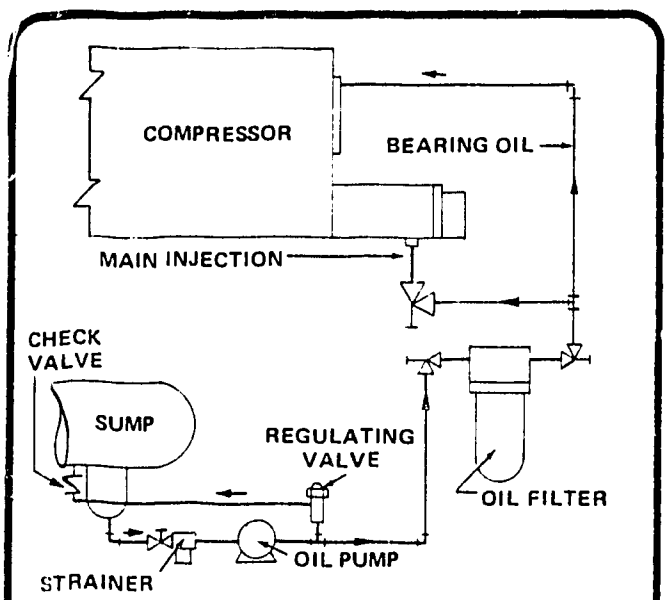

FIG. 13 FULLY PUMPED OIL SYSTEM

2d. Oil Filters

The filters used in the oil system consist of a shell with replaceable 10 micron pleated paper element(s). The normal operating pressure drop across the filter is 1 thru 2 PSID (6.9 thru 13.8 kPa) with a new element. The maximum allowable pressure drop across the filter is 6 PSID (41.4 kPa). Service valves are provided for easy maintenance.

2e. Evaporator Oil Return System (Flooded Chiller, Low Temperature Direct Expansion Chiller)

Powered by discharge gas, a jet pump eductor is used to remove residual oil that accumulates in the chiller. This device is used on all flooded chillers, and direct expansion chillers with low suction temperature applications.

- **Flooded Chiller** - The flooded chiller has 4 to 5 valve taps in the chiller shell which are connected to the suction of the jet pump. The bottom tap should be opened partially for pulldown and overload conditions, when the liquid level is depressed. For high chiller liquid levels, when the load is low, the top tap, generally, should be closed unless field conditions require otherwise. The remaining valve taps permit oil pick-up as the level varies. These taps should be open somewhat, and the one that is closest to the normal liquid level, when operating at the design condenser leaving water temperature, should be wide open.

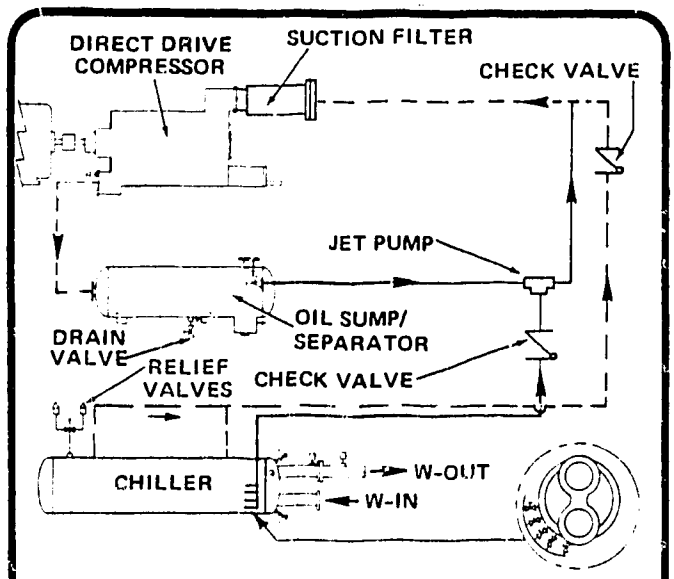

FIG. 14 JET PUMP (FLOODED CHILLER)

NOTE: Avoid having valves wide open that draw only gas from the chiller.

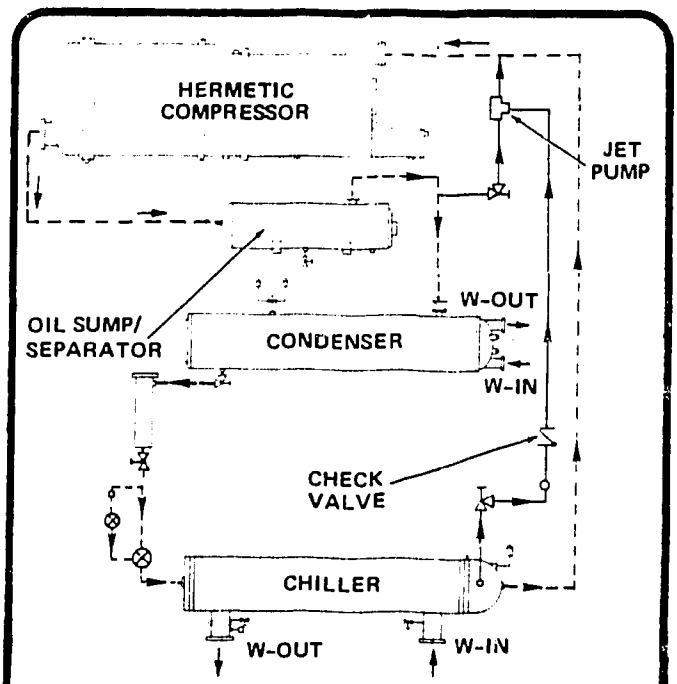

FIG. 15 JET PUMP DIRECT EXPANSION

- **Direct Expansion Chiller** - The direct expansion chiller has one valve tap in the chiller suction head which is connected to the suction of the jet pump. Both the valve at the chiller head and the valve at the jet pump remain fully open.

3. OIL COOLING SYSTEM OPERATION

Liquid injection or a water cooled oil cooler is supplied for oil cooling.

3a. Liquid Injection

Liquid injection is used to cool the oil and refrigerant vapor, and is controlled within the compressor during

compression to insure efficient oil separation, minimize refrigerant solubility in the oil, and maximize lubrication properties. By controlling oil temperature on hermetic units, the liquid injection system, additionally, facilitates the dissipation of heat from the motor windings.

- **Normal Operation** - This system is designed to hold the oil temperature above 135°F (57.2°C) to minimize excessive oil dilution. This is accomplished by a thermostat sensing discharge temperature. The liquid injection solenoid will de-energize when the discharge temperature reaches the design cut-out setting for the thermostat, as noted on the unit wiring diagram accompanying the unit. The solenoid will cycle to maintain 140°F ± 5°F (60°C) oil temperature, minimizing dissolved refrigerant in the oil.

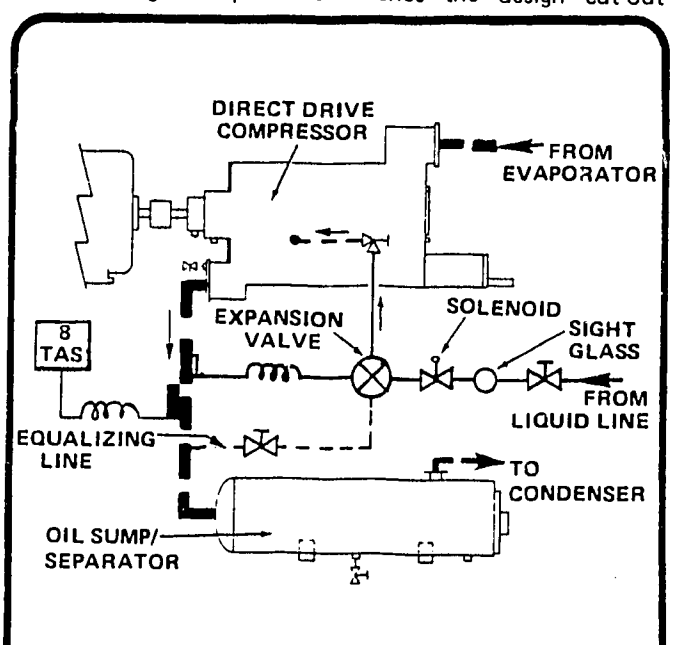

FIG. 16 LIQUID INJECTION

To insure proper oil separation by maintaining discharge superheat under all load conditions, the thermo-expansion valve is factory pre-set to maintain a minimum 40° thru 50F° (22.2° thru 27.8C°) discharge superheat at 100% load. On any given unit, the controls should be set to maintain a minimum of 35F° (19.4C°) superheat at any load.

- **Heat Reclaim/R-12 Units** - The liquid injection assembly for heat reclaim and R-12 units operate in the same manner except that the liquid injection throttling device is a temperature operated valve that will react to discharge temperature only rather than discharge superheat.

3b. Seal Oil Cooling (Open Drive Units)

Seal oil cooling is provided to control the viscosity and temperature of the oil supplied to the shaft seal cavity under all operating conditions. The temperature of the oil entering the seal cavity is maintained at 115°F ± 5°F (46°C ± 2.8°C). The major components of the seal oil cooling system consist of a liquid line solenoid, a temperature operated expansion valve, a direct expansion heat exchanger and a safety thermostat. A check valve is provided upstream of the seal cavity to maintain a full oil level in the cavity, preventing refrigerant leakage through the seal during shut-down.

- **Normal Operation** - The seal oil cooler liquid line solenoid energizes on start-up allowing liquid refrigerant to enter the heat exchanger. The safety thermostat is electrically bypassed during start-up by a timer until conditions stabilize for normal operation. The expansion valve modulates refrigerant flow entering the heat exchanger by responding quickly to temperature changes in the oil entering the seal cavity.

3c. Water Cooled Oil Coolers (Low Temperature or Special Applications)

Constructed with an externally finned tube bundle mounted in a steel shell, the heat exchanger provides the required oil cooling capacity under all operating conditions. A thermostatically actuated two way valve regulates the water flow through the tubes, as the sensing element monitors the leaving oil temperature. The baffle arrangement in the shell side channels the oil flow for a more effective heat transfer.

4. HIGH/LOW SIDE COMPONENT OPERATION

4a. Discharge Check Valve

To prevent migration of liquid refrigerant from the condenser into the separator during shutdown, a discharge check valve is used. Located between the separator and condenser, the check valve also prevents excessive spin-down of the compressor, and allows the unit to be pumped down for servicing.

4b. Condenser

The condenser is a 'shell and tube' heat exchanger which serves to condense the discharge refrigerant vapor by removing heat. Water is circulated through the tubes absorbing heat from the discharge vapor condensing in the shell side of the externally finned copper tube bundle. The water flow rate or temper-

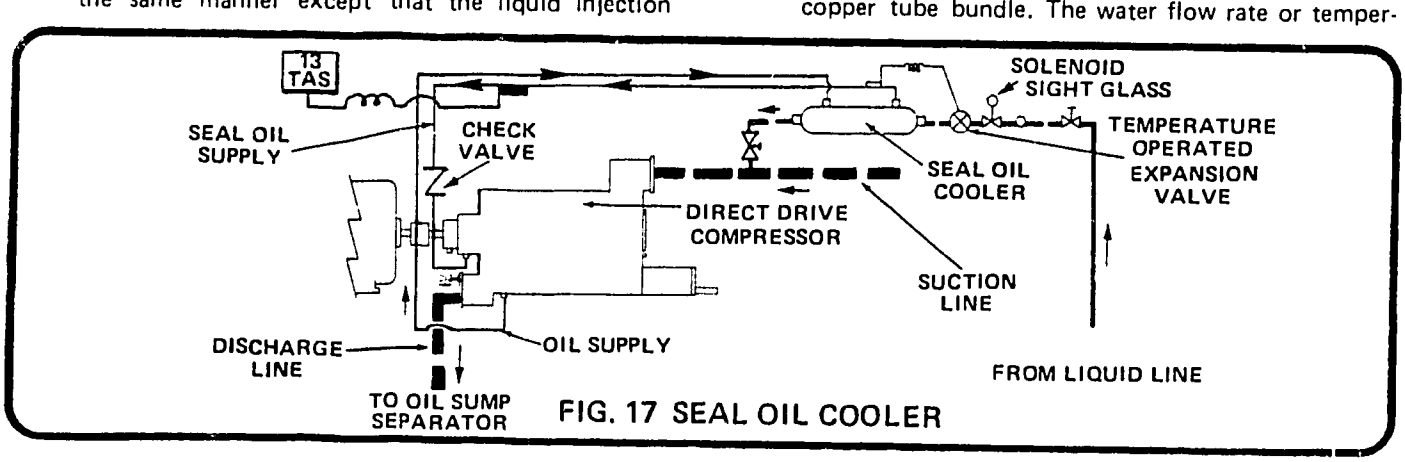

FIG. 17 SEAL OIL COOLER

C. COMPONENT OPERATION CONTINUED

ature will have a significant effect on refrigerant condensing pressures under all operating conditions.

Dual refrigerant relief valves are mounted on the condenser vessel serving as a protection device.

- **Heat Reclaim Condenser** - As heat reclaim applications are specialized, the most economical operation must be evaluated for each job. Generally, when the heat reclaim water circuit is operating, the condensing pressure elevates because of a high entering water temperature, resulting in a higher kilowatt draw. When or if the tower water should operate during the heat reclaim cycle depends upon the heating and cooling load characteristics, and the percentage of heat rejected for heat reclaim.

4c. Filter Drier

The filter/drier is composed of a strainer and replaceable dessicant cartridges which remove contaminants, acid, and moisture from the refrigerant. A shut-off valve is at the outlet end of the filter/drier.

4d. Throttling

Throttling liquid refrigerant serves to regulate the refrigerant flow into the chiller while maintaining the required evaporating temperature. Throttling is accomplished by a multiple valve arrangement. The pilot thermo valve is mounted in a branch liquid line and is used in conjunction with the pilot operated solenoid (P.O.S.) thermal expansion valve which is located in the main liquid line.

- **Pilot Thermo Valve** - The pilot thermo valve meters a branch refrigerant liquid line while sensing either leaving water temperature or suction temperature, and serves to supply a pilot signal to the P.O.S. valve.

- **Pilot Operated Solenoid Valve** - The P.O.S. valve positions according to the signal pilot supplied from the pilot thermo valve. During shutdown the solenoid valve closes the pilot line allowing the valve to close. A manual opening stem is provided for service purposes and must be fully counterclockwise for normal operation.

4e. Chillers

Designed for a fixed flow rate, the "shell and tube" heat exchanger transfers heat from the medium being cooled to the refrigerant, causing the refrigerant to vaporize. The two types of chillers are flooded and direct expansion. Both types have pressure taps at the water inlet and outlet connections, a bulbwell for the water freeze-up thermostat, and a temperature load control sensor.

- **Flooded** - Flooded chillers have liquid refrigerant flooding the lower portion of the shell with the medium being cooled flowing through the tubes. The tubes are externally finned so that the refrigerant will have a large surface area to extract heat from the medium being cooled. Also supplied on the flooded chiller is a dual relief valve to serve as a protection device.

- **Direct Expansion** - The refrigerant enters the chiller through a distributor where it is directed into the tubes (the evaporating refrigerant is at a rate depending upon the cooling load). The tubes are of the patented Inner-Fin® extended surface design which improves heat transfer while minimizing refrigerant pressure drop, permitting a compact and efficient chiller design. The refrigerant vapor passes through an effective filter built into the suction head of the chiller (for additional system protection). The chiller is provided with a single relief valve to protect it from refrigerant over pressure.

4f. Suction Check Valve

Located in the piping between the compressor and the chiller, they are used to prevent excessive "spin-down", equalization of pressure between the compressor and chiller, and to prevent migration of oil into the chiller.

4g. Suction Filter

- **Flooded Units** - Units with a flooded chiller have a 10 micron suction filter mounted on the compressor at the compressor inlet.

- **Direct Expansion Units** - Units with a direct expansion chiller have a dacron felt filter located in the suction head of the chiller.

D. OPTIONAL SUB-SYSTEM OPERATION

1. XTRATHERM VAPOR INJECTION SYSTEM

The vapor injection system is used to provide additional subcooling to the liquid refrigerant supplied to the evaporator for increased refrigeration effect and system capacity. Its main components are a subcooler, subcooler thermo-expansion valve, evaporator pressure regulator, check valve, solenoid valve, vapor injection filter, oil feed valve, dual feed lines to the pilot valve of the main thermo-expansion valve and a minimum load limit switch.

A reed switch is located on the slide valve indicator at approximately 65% of full load. It may be adjusted between 40% and 75% to suit job conditions. The switch is used to control the solenoid which shuts down the vapor injection system on the off cycle or whenever the system becomes ineffective. When the capacity of the compressor reaches the load at which the reed switch is set, the solenoid will open and a small portion of the liquid refrigerant is diverted through the expansion valve to the subcooler. This refrigerant evaporates and in the process absorbs some of the heat of the liquid refrigerant flowing through the subcooler to the evaporator. The evaporator pressure regulator is used to control the pressure leaving the subcooler, which keeps the subcooling liquid temperature relatively constant.

2. HOT GAS BYPASS – UNLOADED START

Hot gas bypass unloaded start is accomplished by diverting gas from the compressor discharge port through a solenoid valve to the compressor suction port. The bypass line is open at start-up and the solenoid valve is used to close it. The purpose for unloading is that the compressor is designed to start under a low load (torque) condition, such as when the low

D. OPTIONAL SUB-SYSTEM OPERATION CONT.

side and high side pressures are equal (balance). The equal pressures allow the compressor and motor to reach operating RPM before the solenoid closes and compression starts. The motor therefore draws fewer inrush amps. In the case of open compressor units, unloaded start may allow use of a smaller horsepower motor.

3. HOT GAS BYPASS CAPACITY CONTROL

Hot gas bypass capacity control is used to feed hot gas directly into the chiller when the compressor's load falls to 10% or less. When this occurs, a solenoid valve in the capacity control line is energized by a reed switch in the slide valve indicator. The introduction of hot gas provides a stable refrigerant flow and keeps the machine from short cycling under low load conditions.

4. REED SWITCH

The reed switching assembly is used in conjunction with a flip-pac relay which controls various system components at different percent slide valve positions. Adjustments may be required upon installation to balance the unit performance with load characteristics.

- **High/Low Limit Switches** - These serve to limit slide valve positioning from extending beyond the range of application. The low limit switch is adjusted correctly when the differential temperature across the chiller is 1F° to 2F° (.5CC° to 1.12C°). The high limit switch is factory set and should be adjusted only by an Authorized Dunham-Bush serviceman.
- **Hot Gas Capacity Control Limit Switch** - (If applicable) is used in conjunction with the low limit switch.
- **Large TX Valve Limit Switch** - (If applicable) Refer to the specific unit wiring diagram for correct positioning.

For any additional information, refer to the specific unit wiring diagram or to Dunham-Bush Service Bulletin No. SR109A.

E. TYPICAL PIPING SCHEMATICS

The piping schematics which appear on the next three pages are typical only. These schematics depict control systems and refrigerant and oil flow through the unit to furnish you with an understanding of the screw compressor packaged chiller.

Shown below are the symbols, codes and items with their descriptions which appear on the piping schematic.

TEMPERATURE AND PRESSURE CONTROL

CODE	DESCRIPTION
2TAS	Freeze Up Thermostat
7TAS	Low Refrigerant Temp. Thermostat
8TAS	Low Discharge Temp. Thermostat
12TAS	Oil Temperature Thermostat
13TAS	Seal Oil Temperature Thermostat
1PS	Hi-Low Refrigerant Pressure Safety Sw.
2PS	Low Refrigerant Pressure Unload Sw.
3PS	Low Oil Pressure Safety Sw.

PIPING SYMBOLS

SYMBOL	DESCRIPTION	SYMBOL	DESCRIPTION
	Refrigerant		Hand Valve
	Refrigerant & Oil		Hand Angle Valve
	Oil		Solenoid Valve
	Control		Check Valve
	Remote Bulb Capiliary Tubing		Sight Glass
	Unloaded Start		Expansion Valve
	Hot Gas Bypass		Pilot Expansion Valve
	Relief Valve		

COMPONENTS

ITEM	DESCRIPTION	ITEM	DESCRIPTION
1	Refrigerant Relief Valve, Chiller	17	Compressor Oil Pressure Balancing Valve
2	Refrigerant Relief Valve, Condenser	18	Refrigerant Expansion Valve
3	Liquid Injection Angle Valve	19	Refrigerant Pilot Expansion Valve
4	Oil Pressure Relief Valve	20	Liquid Injection Expansion Valve
5	Water Temperature Bulbwell	21	Seal Oil Expansion Valve
6	Unloader Solenoid Valve Assembly	22	Unloaded Start Solenoid Valve
7	Oil Injection Angle Valve	23	Hot Gas Bypass Solenoid valve
8	Seal Oil Solenoid Valve	24	Suction Check Valve
9	Load Control Temperature Sensor	25	Oil Filter
10	Water Flow Switch	26	Oil Strainer
11	Liquid Injection Solenoid Valve	27	External Oil Pump
12	Sump Oil Drain	28	Oil Return Check Valve
13	Sump Oil Heater	29	Jet Pump
14	Chiller Freeze Up Bulbwell	30	Jet Pump Check Valve
15	Discharge Refrigerant Check Valve	31	Suction Filter
16	Unloader Throttling Valve		

III. OPERATION

E. TYPICAL PIPING SCHEMATICS CONTINUED

NOTE: DO NOT use this piping diagram to troubleshoot your unit. It is typical only and may not reflect the components provided on your unit.

TYPICAL PIPING SCHEMATIC (PCX180H)

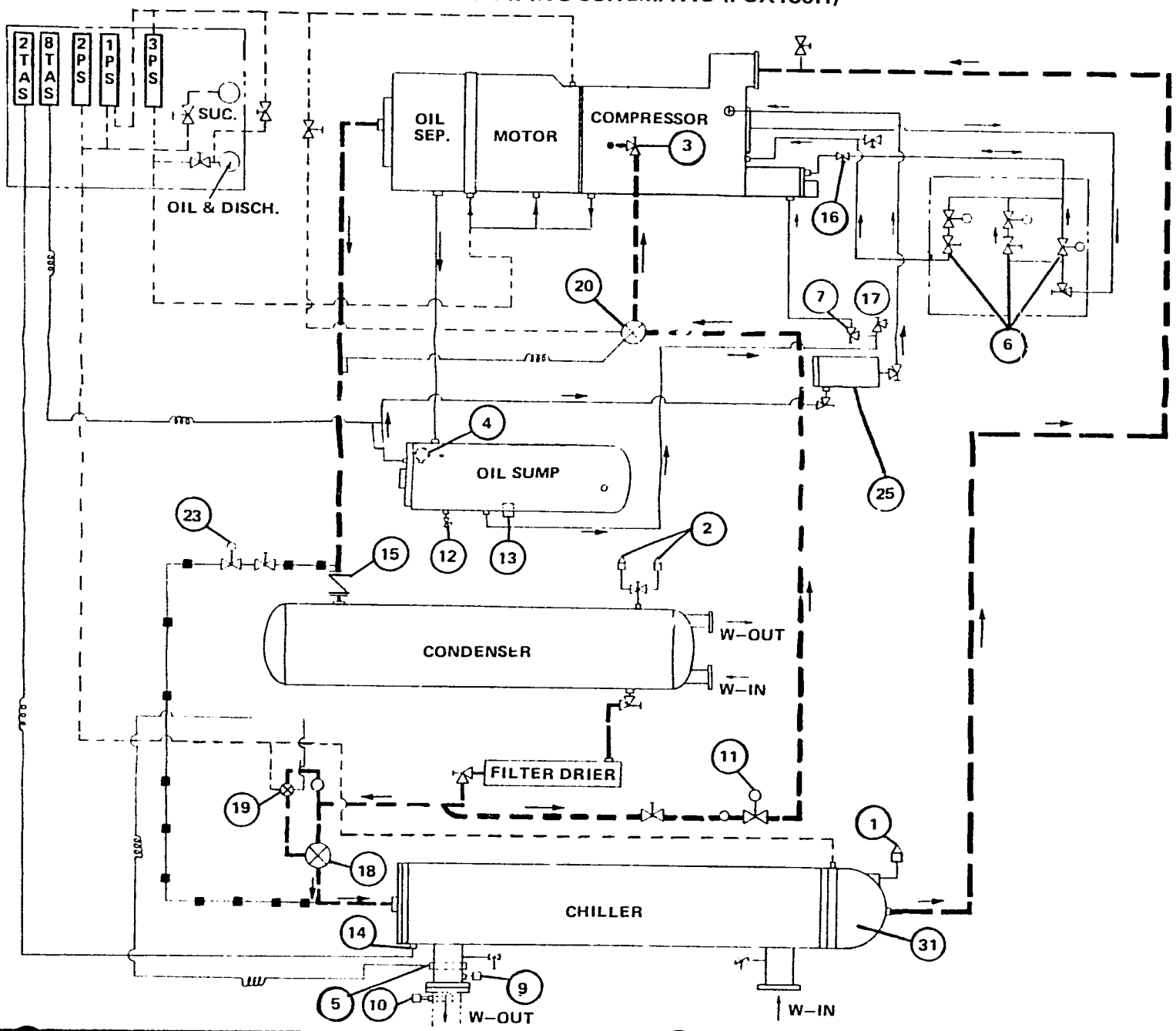

III. OPERATION

E. TYPICAL PIPING SCHEMATICS CONTINUED

NOTE: DO NOT use this piping diagram to troubleshoot your unit. It is typical only and may not reflect the components provided on your unit.

TYPICAL PIPING SCHEMATIC - (PCX290-0)

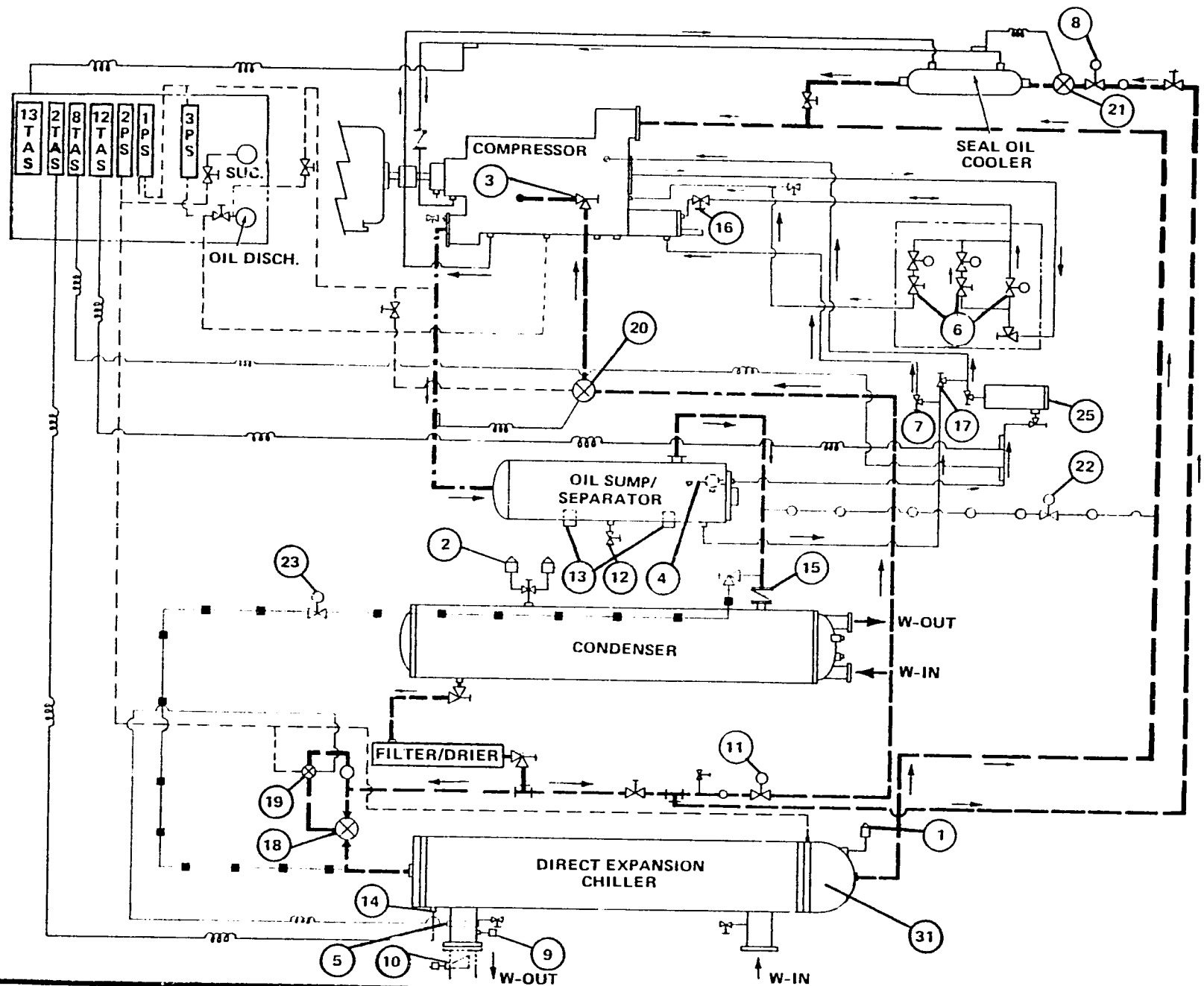

III. OPERATION

E. TYPICAL PIPING SCHEMATICS CONTINUED

TYPICAL PIPING SCHEMATIC FLOODED UNITS

NOTE: DO NOT use this piping diagram to troubleshoot your unit. It is typical only and may not reflect the components provided on your unit.

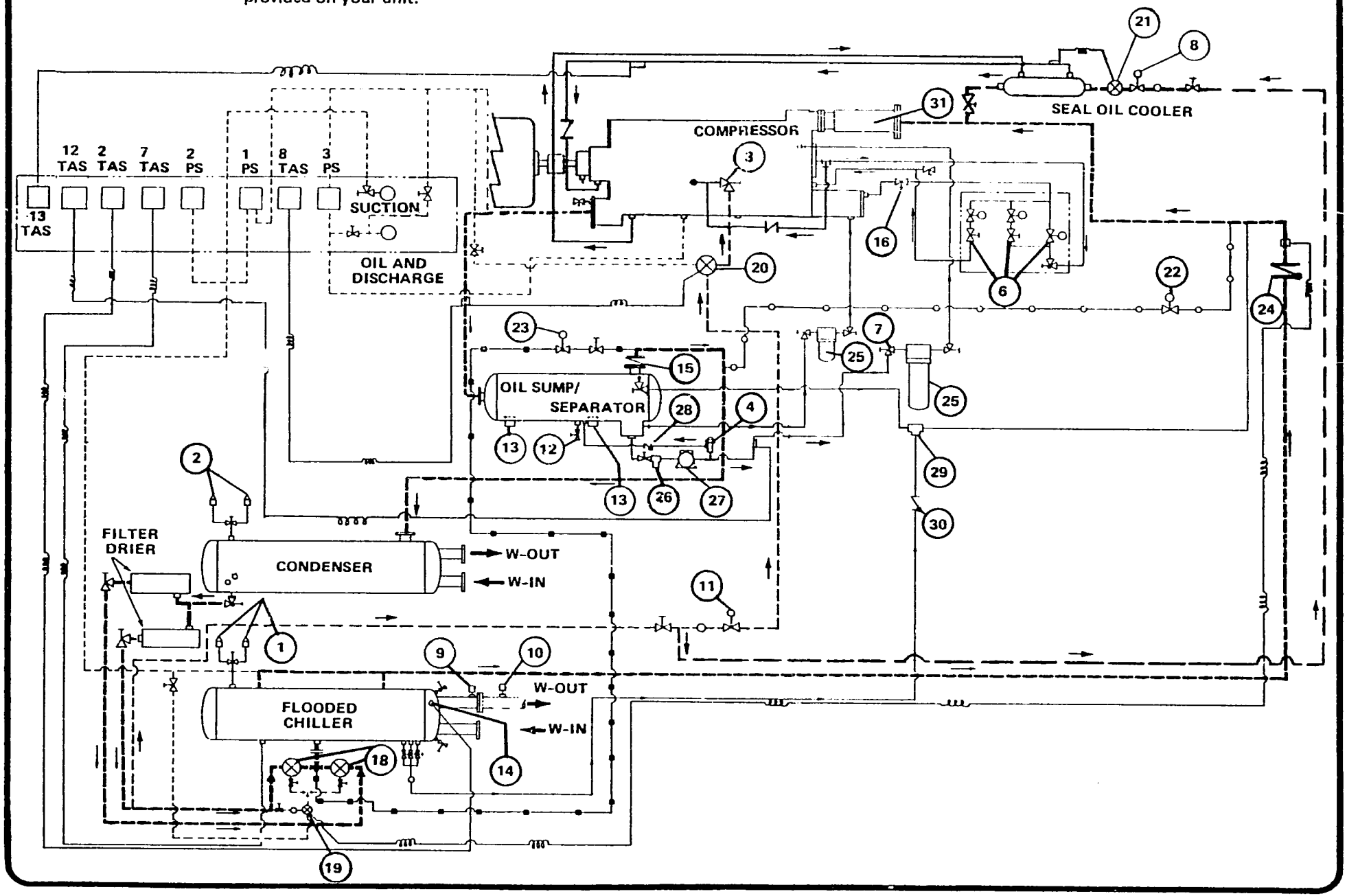

III. OPERATION

F. FUNCTIONS OF ELECTRICAL CONTROLS

Description of controls and the wiring schematics in this manual are typical only. Wiring schematics for a specific unit are shipped with the unit. The wiring schematic also lists control settings.

The electrical panel contains not only controls but also gauges and lights to help determine the phase and quality of operation. The gauges monitor the suction, discharge and discharge oil pressure. The difference between the discharge oil pressure and discharge pressure is the net oil pressure. It should be noted that all gauges should be closed except when they are being read. Indicating lights reflect the following conditions or phases of the unit.

1. LIGHTS

1LT - **Power on - integral part of on-off switch (red or white)**

2LT - **Unit is off on safety controls (red)**

3LT - **Oil pressure below minimum limits (red)**

4LT - **Anti-recycle timer is in the timing phase (green)**

5LT - **Start up delay after the oil pump has started (amber)**

2. MANUAL CONTROLS

1CB - **Control Circuit Breaker**

2CB - **Oil Sump Heaters Circuit Breaker**

1SS - **Master Control Switch - Completes a circuit enabling the unit to start.**
Hermetic compressors - If the unit shuts down because a safety switch opened, the switch must be pushed to the "reset" position to reset the motor winding protector (1TAS) and the oil circuit.

Open compressors - If the unit shuts down because of an oil failure, the switch must be pushed to the "off" position to reset the oil circuit.

3. SAFETY CONTROLS

2FU - **Compressor Motor Housing Fuse**

1TAS - **Hermetic Compressor Motor Winding**
Protects the motor from overheating by opening the safety circuit if the temperature at any of the three strategically placed sensors exceeds the preset temperature (manual reset).

OL - **Compressor and Oil Pump Starter Overloads**
Provides locked rotor and overcurrent protection (manual reset).

1PS - **Hi-Lo Pressure Switch**
Protects against high discharge pressure and low suction pressure. If the discharge pressure exceeds the preset pressure, the contact will open. It must be manually reset on high pressure cutout. If the suction pressure falls below the pre-set pressure, the contact will open. It will automatically reset on low pressure cutout.

13TAS - **Seal Oil Temperature Thermostat Open Compressors**
Protects against excessive temperature of the oil cooling the compressor seal. Opens if temperature rises over the preset temperature (see 12TR) (automatic reset).

12TAS - **High Oil Temperature**
Senses oil temperature after the oil pump. Protects against high oil temperature by opening if the temperature rises above the preset temperature (automatic reset).

7TAS - **Low Refrigerant Temperature Protection Flooded Units**
Senses refrigerant temperature in flooded chiller. Will open if temperature falls below preset temperature (automatic reset).

2TAS - **Freeze Up Thermostat**
Monitors the chilled medium. If the temperature falls below preset temperature, contact will open (automatic reset).

FLS - **Chiller Flow Switch**
Monitors the flow of the chilled medium. Contact will open if flow falls below preset level.

6TAS - **Oil Pump Motor Winding Protector - Hermetic Oil Pump Only**
Temperature is monitored by thermostats embedded in the motor winding. Contact will open if preset temperature is exceeded (automatic reset).

CWS - **Chilled Water Pump Starter**
Auxiliary contact on starter is closed whenever circuit to chilled water pump motor is closed.

1TR - **Anti-Recycle Timer**
Prevents compressor from starting more than three times in one hour. Completes safety circuit.

4. AUTOMATIC AND OPERATING CONTROLS

HTR - **Oil Sump & Compressor Motor Housing Heaters**
Must be operating a minimum of twenty-four (24) hours and the sump oil temperature must be at a minimum of 100°F (38°C) prior to start-up. They do not operate during compressor operation.

1CR - **Master Control Relay**
When all safety controls are closed, relay will close locking itself in and completing a circuit to the remainder of the control circuit.

1M - **Oil Pump Starter**
Starts oil pump and completes circuit to the remainder of the control circuit.

3TR - **Oil Pump Shut Down Time Delay**
Starts at same time as oil pump starter, contacts are timed to open circuit to oil pump starter after 60 seconds delay if oil pressure is not proved.

3PS - **Oil Pressure Switch**
Protects compressor against loss of oil pressure. Opens circuit to oil pressure failure time delay (2TR) when predetermined pressure is reached. If pressure is not reached the timer will time out.

2TR - **Oil Pressure Failure Time Delay**
Begins timing for 20 seconds upon operation of oil pump starter, or if an oil failure is sensed by 3PS. If oil has not reached predetermined pressure, 3PS will remain closed and in twenty (20) seconds the contact will open and shut down the system (manual reset).

F. FUNCTIONS OF ELECTRICAL CONTROLS CONT.

4TR - **Start-Up Delay**
Begins timing for 60 seconds when the oil pump starter operates. Will close the circuit to the compressor control relay (3CR) in one (1) minute. The purpose is to lubricate the compressor and allow the compressor to unload before starting.

2CR - **Transfer Relay**
Activates when the oil pump starter operates. Locks in the oil pump starter and shuts down the oil sump and compressor heaters.

3CR - **Compressor Control Relay**
Completes a circuit to the temperature load controller (TLC), compressor starter control circuit, elapsed time indicator (6TR), seal oil thermostat by-pass timer (12TR), seal oil cooler solenoid (13SOL), liquid injection valve solenoid (8SOL), and opens the circuit to the fast unload solenoid (6SOL) to provide unloaded start.

2PS - **Low Suction Pressure Unload Switch**
Flooded Chillers - senses suction pressure and will complete a circuit to the fast unload solenoid (6SOL) if the pressure falls below the preset level. Direct Expansion Chiller - senses suction pressure completing a circuit to the fast unload solenoid (6SOL), the lock in relay (4CR) and the expansion valve solenoid when the pre-set pressure is reached.

4CR - **Lock In Relay - Direct Expansion Chiller**
When the suction pressure switch (2PS) closes upon low pressure and pumps the unit down, this relay will be energized, locking-in itself and the expansion valve solenoid (4SOL).

6TR - **Elapsed Time Indicator**
Indicates the actual amount of hours the compressor has operated.

12TR - **Seal Oil Thermostat Bypass Timer**
When energized will bypass the seal oil thermostat (13TAS) for a period of four (4) minutes to allow the cooled oil to flow from the seal oil cooler to the compressor seal preventing complete shutdown of the system. If the seal oil temperature has not returned to the preset maximum in this time, the system will shutdown.

4SOL, 5SOL - **Expansion Valve Solenoids**
Controls flow of the refrigerant to the expansion valves used to meet the required refrigeration or air conditioning load.

8SOL - **Liquid Injection Solenoid**
Controls flow of refrigerant to the expansion valves used to control the operating temperature of the compressor.

8TAS - **Low Discharge Temperature Thermostat**
If the discharge temperature is not sufficient, this control will open preventing the liquid injection solenoid from operating.

9CR - **Holding Relay**
Controls the large expansion valve solenoid on units with direct expansion chillers. Will open or close the solenoid depending upon the information received from the reed switches (1RS and 2RS

5RS & 6RS - **Reed or Proximity Switches**
Located on the slide valve indicator, they are activated by a magnet traveling in relationship with the slide valve. They control the large expansion valve solenoid through holding relay 9CR.

1SOL - **Load Solenoid Valve**
When energized, it provides a path to dissipate hydraulic pressure on the slide valve piston which allows discharge refrigerant gas pressure to move the slide valve in the load direction.

2SOL - **Unload Solenoid**
When activated allows pressurized hydraulic fluid to flow through a metering valve to the slide valve piston causing it to move in the unload direction.

6SOL - **Fast Unload Solenoid**
Performs the same function as the unload solenoid except that it does not have a metering valve. It operates at start up to provide a minimum load and when the suction pressure falls below the preset pressure of the Low Suction Pressure Unload Switch (2PS)

8SOL - **Liquid Injection Solenoid Valve**
When activated permits liquid refrigerant to flow to the liquid injection expansion valve.

13SOL - **Seal Oil Cooler Solenoid Valve**
When energized allows liquid refrigerant to flow to the seal oil cooler expansion valve.

TLC - **Temperature Load Controller**
The temperature load controller (TLC) controls a hydraulic cylinder giving the unit an infinitely variable capacity control. It senses the temperature of the chilled water through a sensor located at the chilled water outlet connection. As the water temperature rises or falls, the TLC will signal the unloader system to increase or decrease the compressor capacity to match the load and keep the chilled water at the preset temperature.

When the TLC receives a signal from the chilled water temperature sensor that the load has increased, it completes a circuit to the load solenoid causing the compressor to load. After the required capacity of the compressor is reached the load solenoid will be de-energized. The TLC will continually monitor the temperature sensor completing and opening circuits to the load and unload solenoids as necessary.

The TLC also senses the current draw of the motor through a current transformer located in the starter control panel. If the motor load reaches 100% of the preset maximum load setting, the unload solenoid will be energized and the compressor will unload. The current control will override all other controls in the auto or manual positions.

5. HEAT RECLAIM CONTROLS

All heat reclaim controls, shown on the typical schematic, are used to prevent the packaged chiller from tripping out on high pressure during periods of heat reclaim, to provide higher condensing temperatures during these periods, and to insure a minimum of rejected heat for reclamation during those periods of light cooling load. It is the responsibility of the engineer and contractor of a particular job, to provide controls necessary for the operation and safety of the heat reclaim and chilled water systems external to the packaged chiller.

13PS - **Head Pressure Control**
This control senses discharge pressure, and has three steps of control and is automatically reset:

1. When the first step of rise in pressure is reached, timed relay (11TR) will be activated and power will be available to the low slide valve block relay (6CR) through the low limit relay (7CR).

2. Rise in pressure to close the second stage will prevent the compressor from loading further.

3. If the pressure should rise closing the third step, the control of the unload solenoid (2SOL) by the temperature load controller(TLC) will be bypassed causing the compressor to unload.

11TR - **Heat Reclaim Transition Timer**
When this control is activated the instantaneous contacts open the circuit to the load solenoid (1SOL) preventing it from loading, and closes a circuit to the unload solenoid (2SOL) bypassing the temperature load controller (TLC) causing the system to unload. The timed contact, which is delayed for three minutes, activates the heat reclaim relay (11CR).

11CR - **Heat Reclaim Relay**
Energization of this relay will close a circuit to the load solenoid (1SOL) and open a circuit to the unload solenoid (2SOL). putting them under the influence of the temperature load controller (TLC).

3RS & 4RS - **Low Limit Reed Switches**
These are proximity switches located on the slide valve indicator and are activated by a moving magnet. They are set to prevent the compressor from unloading below 25% of its slide valve position through the low limit control relay (7CR).

7CR - **Low Limit Control Relay**
This relay is activated by the reed switches (3RS & 4RS) and through its action controls the low slide valve block relay (6CR).

6CR - **Low Slide Valve Block Relay**
When the compressor has unloaded to the point at which the reed switches are set, approximately 25% of slide valve position, this control relay will be activated. It will open circuits to the unload solenoid (2SOL) and fast unload solenoid (6SOL) preventing the unit from unloading further. In addition, a circuit is closed to the hot gas solenoid (3SOL).

3SOL - **Hot Gas Solenoid**
When activated this solenoid will allow discharge gas to be bypassed to the inlet side of the chiller.

2PS - **Low Suction Pressure Switch**
Sensing low pressure this switch will cause the compressor to unload through the fast unload solenoid (6SOL) on flooded units and through control relay (12CR) on direct expansion units.

12CR - **Low Suction Pressure Unload Relay Direct Expansion Units**
This relay when activated opens a circuit to the load solenoid (1SOL) and closes a circuit to the unload solenoid (2SOL) bypassing the temperature load controller (TLC).

16TAS - **High Entering Chilled Water Safety Flooded Units**
Senses the chilled water temperature and if it rises to the preset temperature will cause the compressor to unload through the fast unload solenoid (6SOL).

6. HEAT RECLAIM OPTION

1RS & 2RS - **High Limit Reed Switches**
These proximity switches are located on the slide valve indicator and are activated by a magnetic field. They are set to prevent the compressor from loading above a set point.

8CR - **High Limit Control Relay**
This relay is activated by reed switches (1RS & 2RS) and through its action controls the high slide valve block relay (5CR).

5CR - **High Slide Valve Block Relay**
When the compressor has loaded to the point where the reed switches are set, this control relay will be activated. It will open a circuit to the load solenoid preventing it from loading further.

7. TYPICAL START-UP OF PACKAGED CHILLER

Assume that the following conditions are met:

- Water is flowing through the chiller.
- All safety controls are made.
- Power has been furnished to the unit for twenty-four hours and the oil is at the proper temperature.
- Cooling load is available.

The control switch, 1SS, is made and the following action takes place.

1. Power on light (1LT) illuminates the master control relay (1CR) is energized and its contacts close.

2. Through the operation of 1CR the oil pump starter (1M) is energized and the oil pump shut-down relay (3TR) begins timing for 60 seconds before opening its contacts.

F. FUNCTIONS OF ELECTRICAL CONTROLS CONT.

3. If insufficient pressure differential is sensed by the compressor oil pressure differential switch (3PS), the oil pressure failure time delay relay (2TR) and oil pump time delay relay (3TR) will simultaneously start to time. (2TR) will time open after 20 seconds and (3TR) will time open after 60 seconds. This action will de-energize the transfer relay (2CR). Its contacts will open and de-energize the oil pump, preventing the machine from starting. If the unit is operating this action will shut the unit off.
4. When the start-up time delay (4TR) has completed its timing function, it will energize the compressor control relay (3CR).

- **Direct Expansion Units** - Starting sequence is as indicated in steps 1 thru 4 above plus:

5. Control Relay (3CR) completes a circuit to the compressor starter, the elapsed time indicator (6TR) and furnishes power through the transformer (2T) to the temperature load controller (TLC). It also furnishes control power to the pumpdown switch (2PS). It also opens a circuit to the fast unload solenoid (6SOL).
6. When the compressor has pumped down the low pressure switch (2PS) will close, furnishing power to the lock in relay (4CR), and the expansion valve solenoid (4SOL). The expansion valve will begin to feed the unit and the unit will now be under the influence of the temperature load controller (TLC).

- **Flooded Units** - Starting sequence is as indicated in steps 1 thru 4 above plus:

5. Control relay (3CR) completes the circuit to the compressor motor starter, the elapsed time indicator (6TR), and furnishes power through the transformer (2T) to the temperature load controller (TLC). The expansion valves (4SOL & 5SOL), liquid injection solenoid (8SOL), seal oil cooler solenoid (13SOL), and seal oil thermostat are also energized. 3CR also opens a circuit to the fast unload solenoid. The compressor will now be under the control of the temperature load controller (TLC).

- **Heat Reclaim Units** - Starting sequence is as indicated in steps 1 thru 4 above plus:

5. Control relay (3CR) completes a circuit to the compressor starter control circuit, expansion valves (4SOL & 5SOL), seal oil cooler solenoid (13SOL), liquid injection solenoid (8SOL) seal oil thermostat bypass timer (12TR), elapsed time meter (6TR), and furnishes power through the transformer (2T) to the temperature load controller (TLC). It also opens a circuit to the fast unload solenoid (6SOL). The unit is now operating directly under the temperature load controller (TLC).

STARTER CONNECTIONS

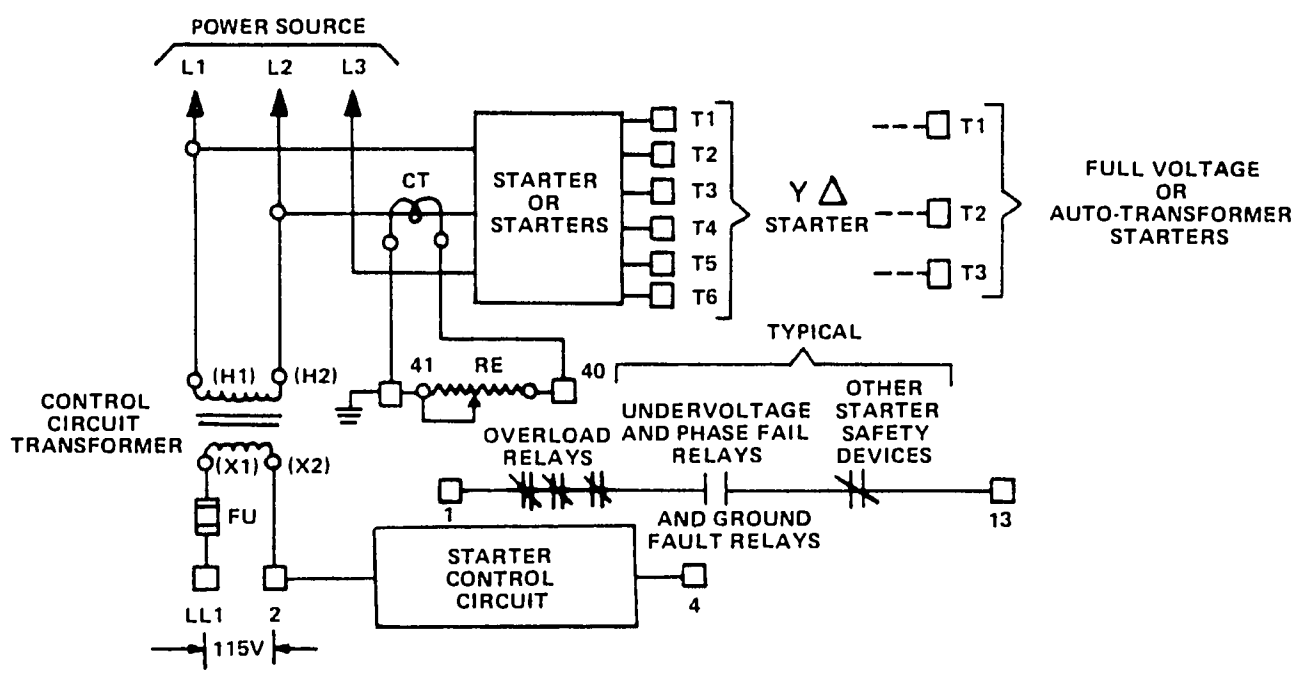

NOTES:

1. Control transformer is optional. X2 is to be grounded only when transformer is furnished.
2. Starter must be under direct control of terminals 2 & 4. No device either manual or automatic shall be used which will stop or start the compressor motor independently of the signal applied to terminals 2 & 4. Any such necessary devices shall be connected between terminals 1 & 13 as shown under "typical" above and shall be manual reset.
3. Field wiring terminals must be numbered as shown and must be directly connected to like numbered terminals in PCX/DBX control panel.

G. TYPICAL ELECTRICAL SCHEMATICS

TYPICAL HERMETIC - FLOODED CHILLER

These diagrams are typical only. Consult the diagram accompanying the unit for control settings and wiring logic.

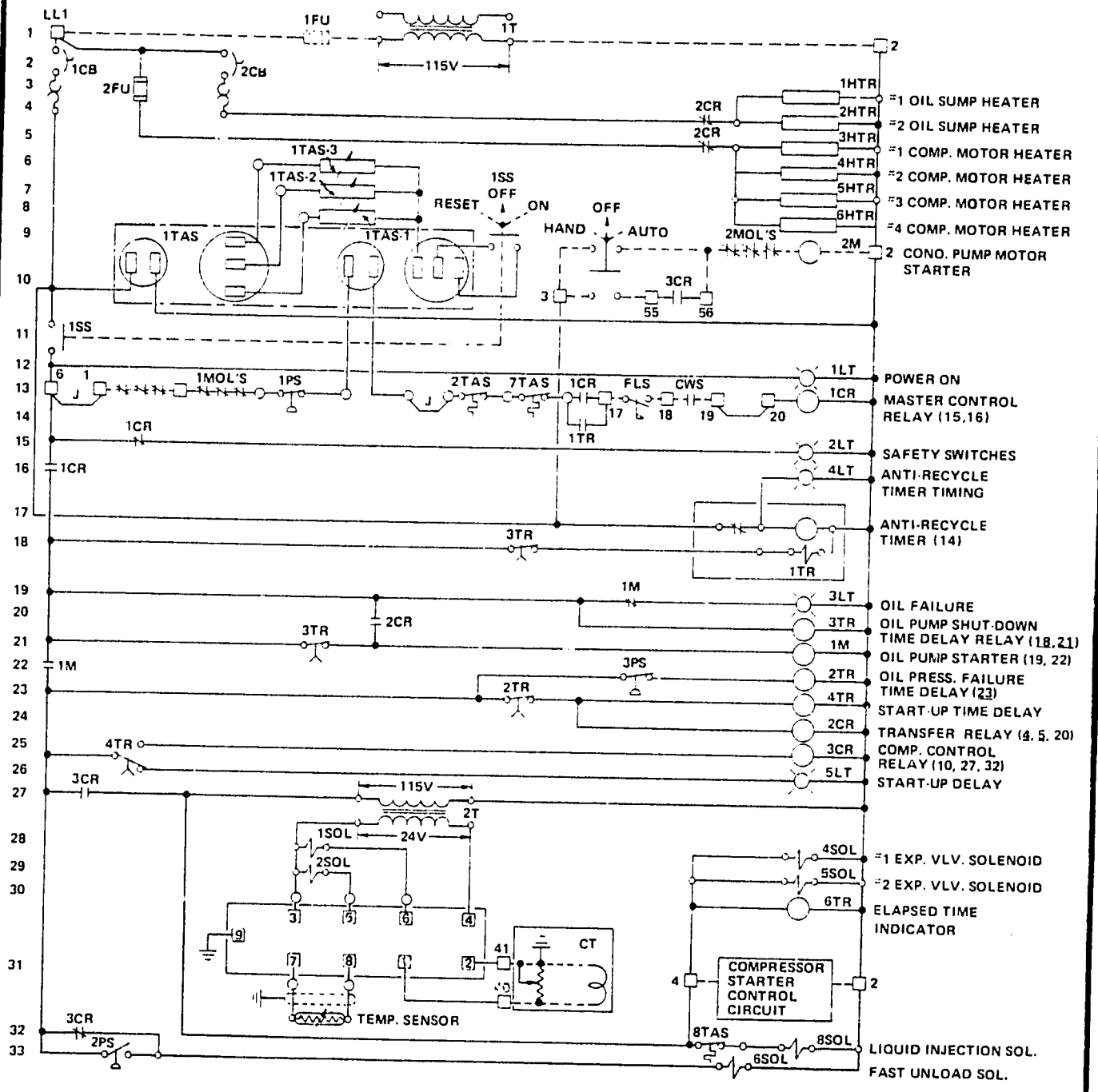

G. TYPICAL ELECTRICAL SCHEMATICS CONTINUED

TYPICAL HERMETIC - DIRECT EXPANSION CHILLER

These diagrams are typical only. Consult the diagram accompanying the unit for control settings and wiring logic.

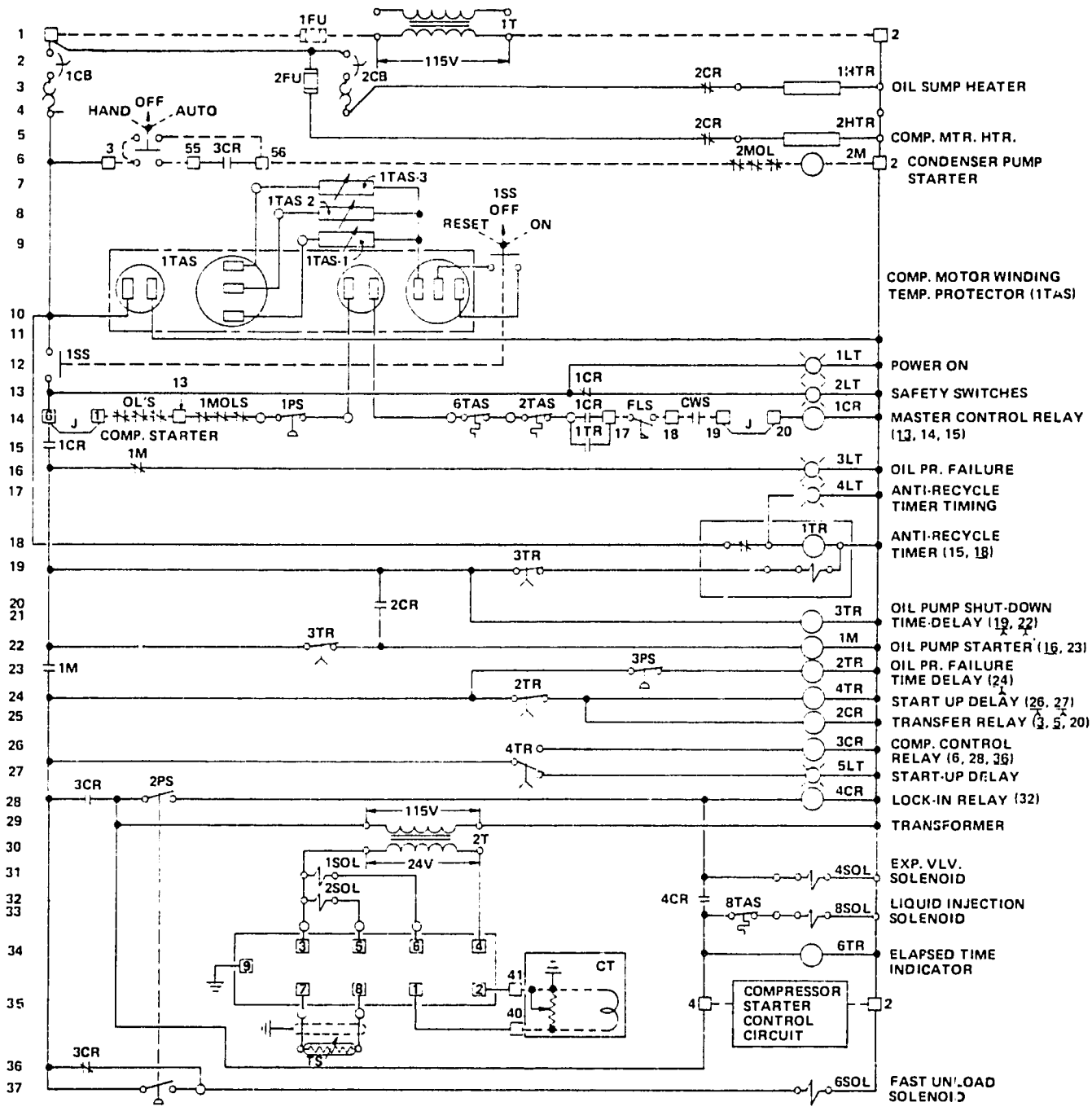

TYPICAL DIRECT DRIVE DIRECT EXPANSION CHILLER

These diagrams are typical only. Consult the diagram accompanying the unit for control settings and wiring logic.

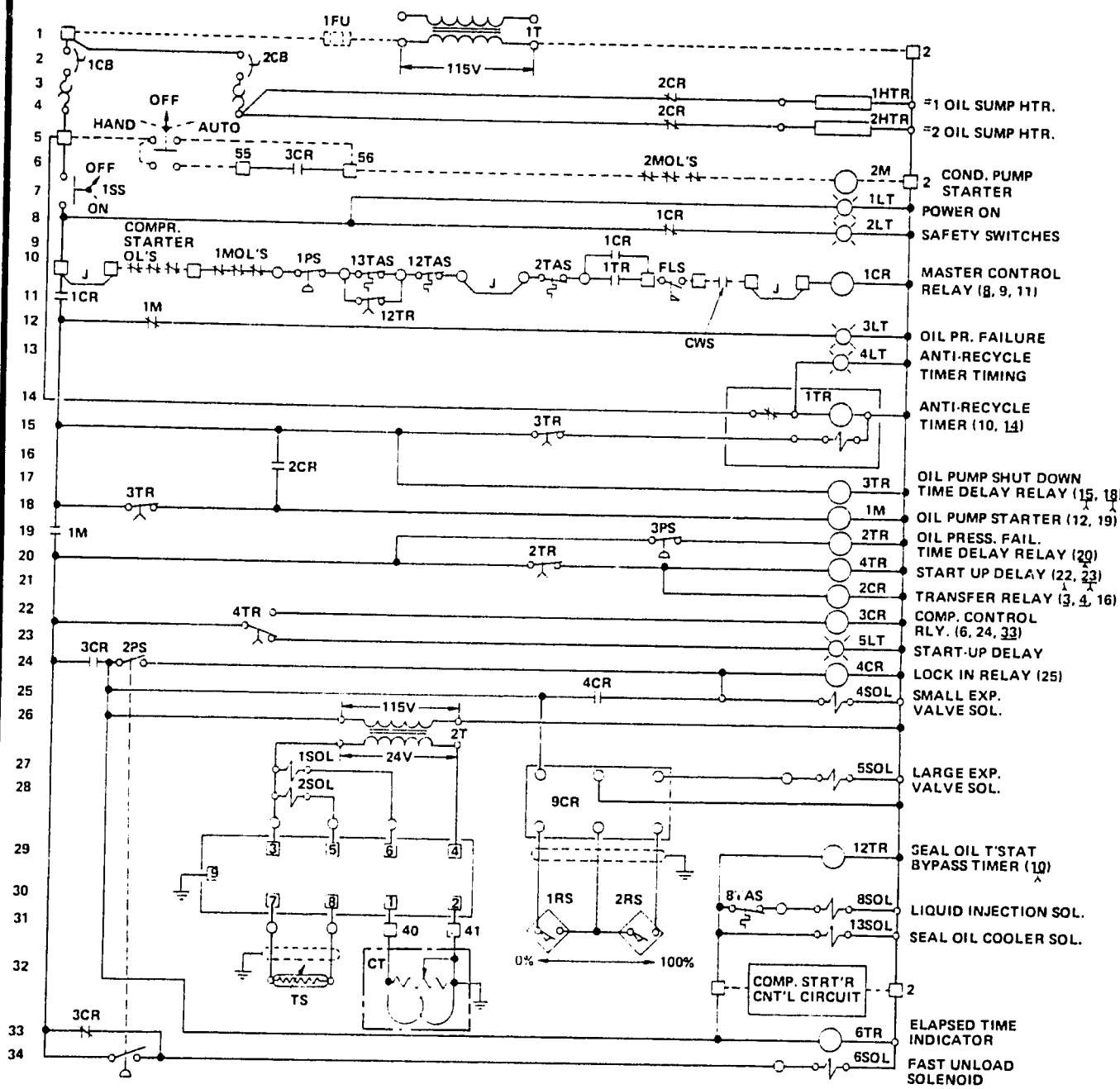

TYPICAL DIRECT DRIVE - FLOODED CHILLER

These diagrams are typical only. Consult the diagram accompanying the unit for control settings and wiring logic.

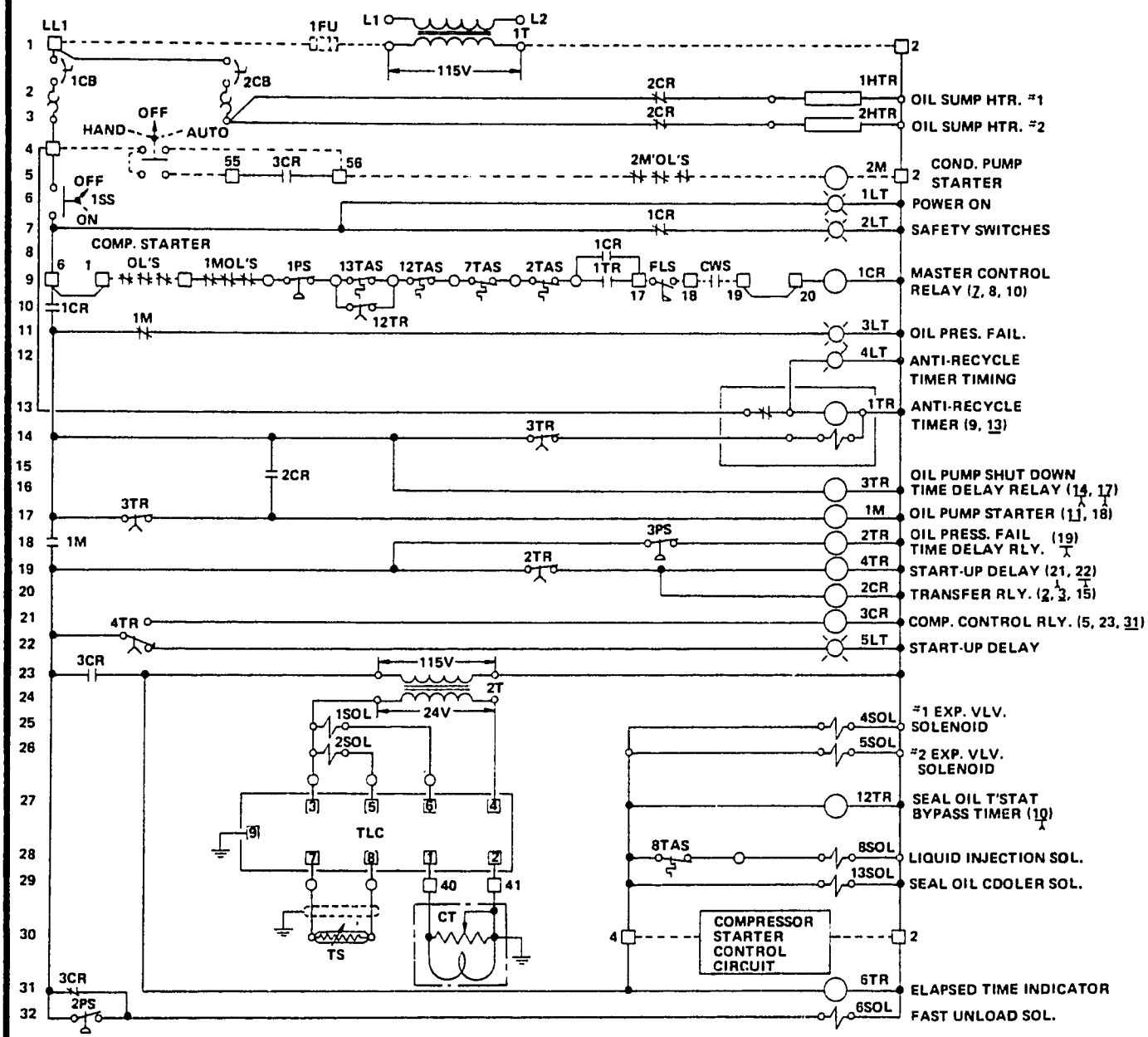

G. TYPICAL ELECTRICAL SCHEMATICS CONTINUED

TYPICAL DIRECT DRIVE - HEAT RECLAIM WITH DIRECT EXPANSION CHILLER

These diagrams are typical only. Consult the diagram accompanying the unit for control settings and wiring logic.

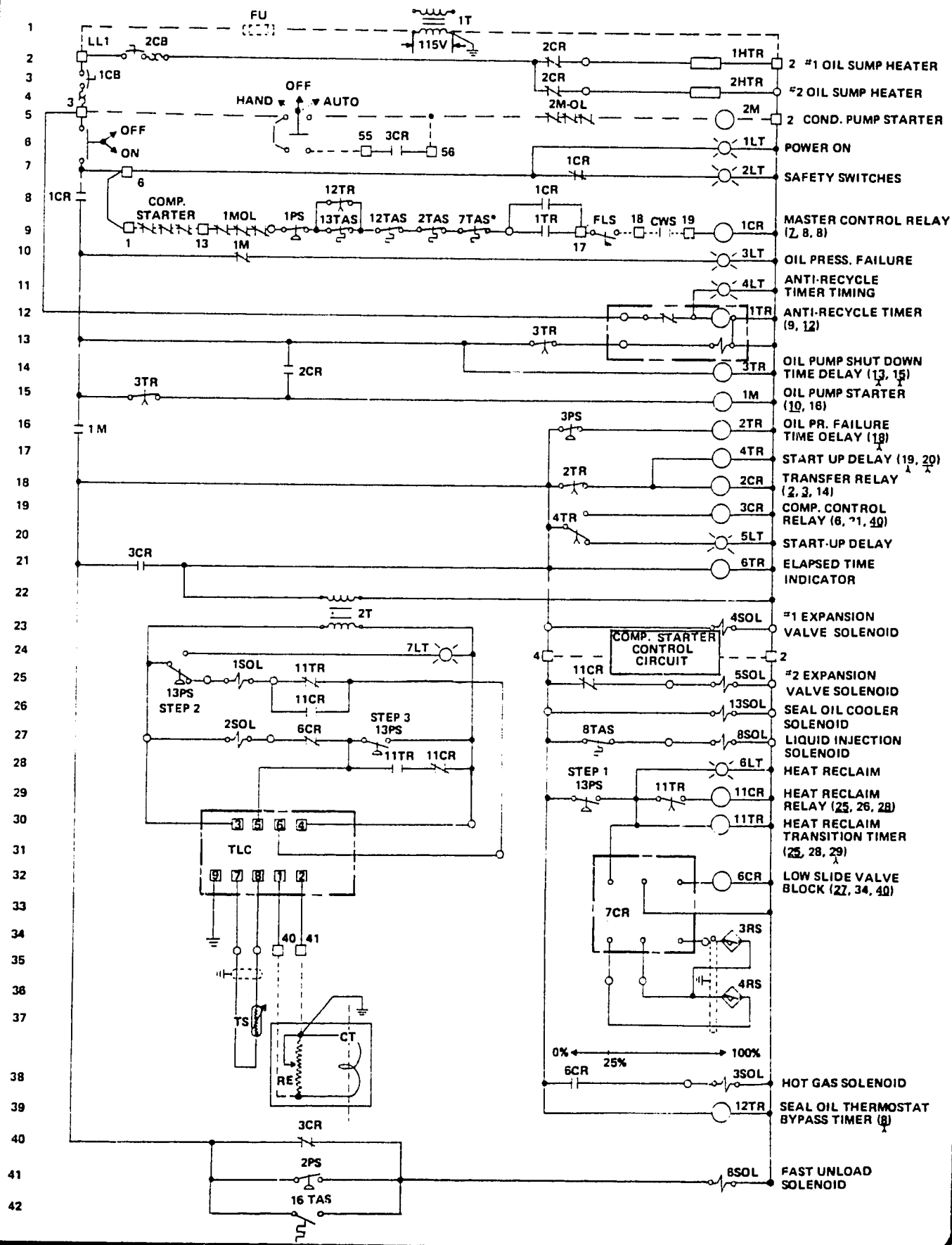

G. TYPICAL ELECTRICAL SCHEMATICS CONTINUED

TYPICAL DIRECT DRIVE - HEAT RECLAIM WITH FLOODED CHILLER

These diagrams are typical only. Consult the diagram accompanying the unit for control settings and wiring logic.

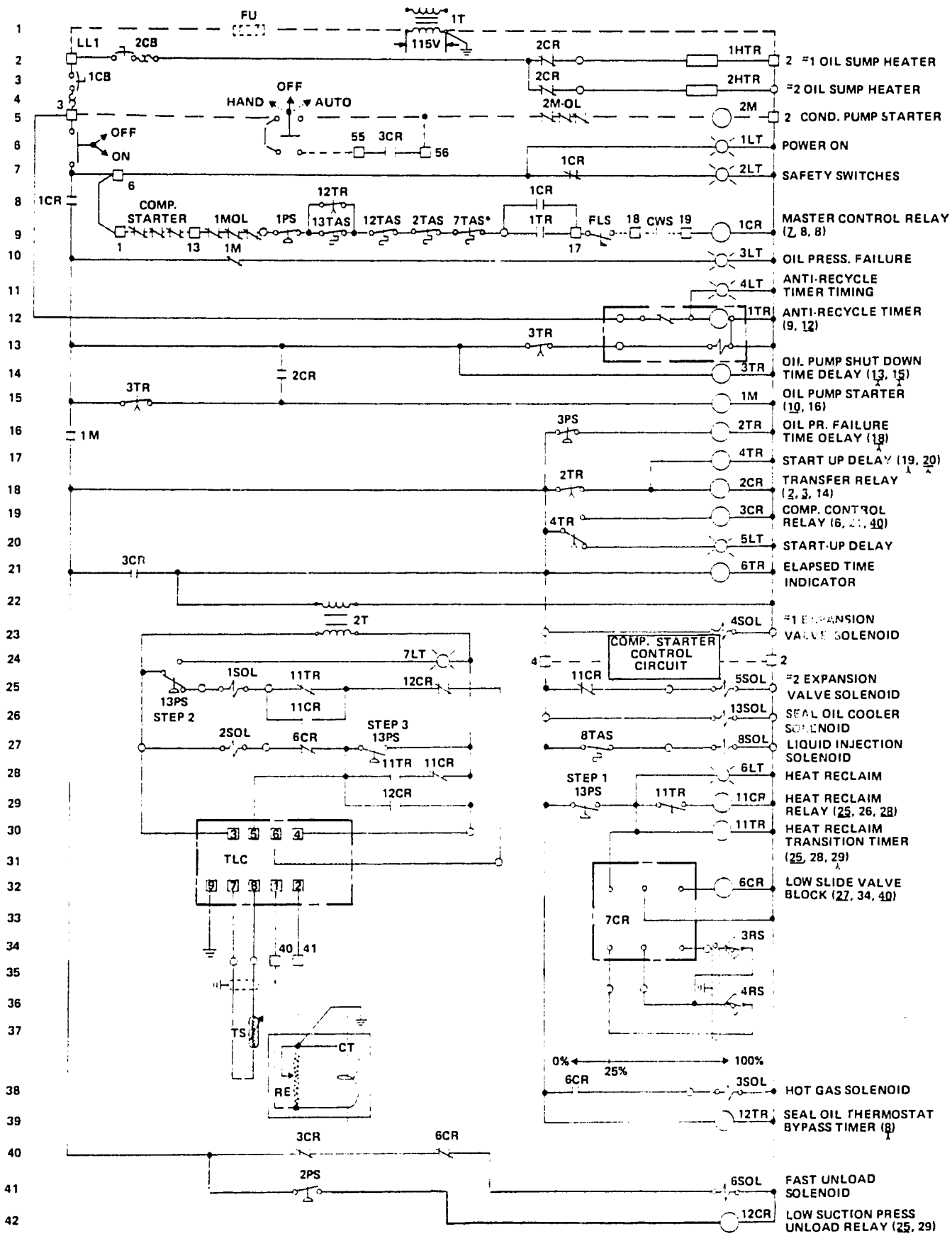

IV. MAINTENANCE

A. GENERAL

Maintenance personnel should become thoroughly familiar with the unit and the contents of this manual in order to properly diagnose and rapidly correct and prevent minor difficulties. Routine or periodic maintenance should be followed to insure a comprehensive preventative maintenance program minimizing costly repairs. National Service Bulletins as referenced in this section, may be obtained from Dunham-Bush, West Hartford, Connecticut, 06110, National Service Department.

CAUTION: All valve caps, packing glands and pipe plugs must be tightened securely after performing maintenance and/or periodically, to prevent refrigerant leakage.

WARNING: All inspection, maintenance, or repairs should be done by an authorized, qualified, Dunham-Bush, Inc., Service Representative as listed in the latest edition of Form No. 9822. Failure to comply may jeopardize the warranty.

B. PERIODIC MAINTENANCE

1. PRE-INITIAL START-UP MAINTENANCE

a. Insure unit is level.

b. Check for any piping stresses on unit.

c. Check coupling alignment. (Direct drive compressor and oil pump motors)

d. Tighten all wiring connections.

e. Check tripping of safety controls for grounding. (See Typical System Tests Section)

f. Check compressor housing heaters and oil sump heaters for proper operation.

g. Check all control and starter wiring connections for grounding.

h. Sump oil level must be visible in sump sight glass, sump oil temperature must be at a minimum of 100°F (37.8°C).

j. Hydronic system must be vented free from entrapped air, and the piping properly supported to the unit.

k. All satellite equipment and associated control devices must be operationally checked and capable of handling their design capacities.

m. Inspect for external refrigerant leaks with an electronic leak tester or halide torch.

n. Perform "insulation resistance test" and record temperature and meg ohm readings. Consult National Service Bulletin SR1.12 for additional information.

p. Check refrigerant indicators for evidence of moisture.

NOTE: If moisture is evident prior to initial start-up, the refrigerant indicators should be monitored after start-up to insure that the moisture is removed. If moisture is evident after minimal running time, the unit must be shut-down and the filter drier elements replaced. (See Component Maintenance Section)

r. Adjust limit switches.

2. POST INITIAL START-UP AND DAILY MAINTENANCE

NOTE: A log of daily readings should be maintained. (Refer to Maintenance Records Section)

a. Check suction superheat conditions after start-up for proper adjustment at thermal expansion valve. (Refer to Component Maintenance Section)

b. Inspect sight glasses for the following:

- Liquid Line, Inlet Side of Pilot Valve - Inspect for a full glass free from bubbles.
- Condenser Sight Glass (if equipped) - Inspect level to be visible.
- Liquid Injection Line Sight Glass (if equipped - Sight glass (downstream of solenoid) will be nearly empty if liquid injection solenoid is off. Sight glass will be full of liquid refrigerant, (if located upstream of TX valve) or flashing refrigerant (if located downstream of TX valve).

c. Check and record the following:

- Suction, discharge and oil pressures.
- Condenser inlet and outlet water temperatures.
- Chiller inlet and outlet cooling medium temperatures.
- Compressor motor amps.
- Oil Temperature.
- Compressor motor voltage.
- Discharge Temperature

d. Initial seal drainage collection (direct drive compressor) can be 0.31 cubic inches per hour (5 cc per hour) after start-up. After the unit has run a seven day break-in period, the normal seal drainage is 0.06 to 0.24 cubic inches per hour (1 cc to 4 cc per hour).

e. Check evaporator oil return (if equipped) to be at liquid level. (Refer to Component Maintenance Section)

f. Rotate capacity control hot gas bypass (optional) throttling valve to proper adjustment after initial start-up.(Refer to Sub-System Maintenance Section)

g. Check refrigerant indicators for evidence of moisture. Change filter drier elements if required. (Refer to Component Maintenance Section)

3. 1000 HR. (MONTHLY) INTERVAL MAINTENANCE

NOTE: A log of 1,000 hour readings should be maintained, and the data compared to daily values for evidence of operational changes, i.e. condensing pressure, superheat temperatures, compressor/oil pump motor current amps, etc. (refer to maintenance records).

3. 1,000 HR. INTERVAL MAINTENANCE - CONT.

a. Check oil sump sight glass to be at proper level.

b. Check oil filter pressure drop and replace filter elements if necessary. A clean filter will have 1 to 2 psid (6.9 to 13.8 kPa). The oil filter should be changed at 6 psid (41.4 kPa) pressure drop across the filter.

c. Check gages and controls for proper operation and calibration.

d. For other than water chiller applications, field test chiller cooling medium for proper freeze point. (Brine applications, check pH)

e. Inspect all motor starter control relay contacts for arcing and replace if required. Check thermal switch heaters and starter linkages for proper operation.

f. Check compressor and oil sump heaters for proper operation.

g. Check and record the following additional items:

- Oil temperature at manifold
- Oil pump motor current
- Oil pump motor voltage
- Suction superheat
- Discharge superheat
- Chiller and condenser pressure drop

h. Check filter drier pressure drop (Maximum operational pressure drop across filter is 5 psid (34.5 kPa)

j. Check unloaders for proper loading and unloading speed. For a full stroke a maximum of two (2) minutes should elapse.

k. Check all sub-systems for proper operation, i.e. seal oil cooler, evaporator oil return, vapor injection, liquid injection, water cooled oil cooler. (Refer to Oil Cooling System Maintenance Section and Sub-System Maintenance Section)

m. Check condenser water regulating valve(s) for proper adjustment.

4. 3,000 HOUR INTERVAL MAINTENANCE

a. Check coupling alignment (direct drive compressors, oil pump).

b. Field test oil for acidity. Take action if required. Low temperature and heat reclaim require professional analysis at 3,000 interval. Refer to National Service Bulletin SR96.

NOTE: PH factor and total acid number (TAN) are highly responsive to moisture.

c. Perform "insulation resistance test" (Hermetic compressor, oil pump motors) and record meg ohm and temperature readings (refer to test procedures).

5. ANNUAL MAINTENANCE

a. Send sample of oil to laboratory for thorough analysis. Records of the analyses will provide a continuous case history, and insight, as to what system components have contributed to the quality of the oil. Refer to National Service Bulletin SR96 for analyses information. Change oil if required.

b. Send sample of chiller medium and condenser water to laboratory for analysis. This will provide insight as to what maintenance may be performed to prevent corrosive chemical activities. (See component maintenance)

c. Send sample of refrigerant to manufacturer for professional analysis of contamination. Water content should not exceed 20 PPM.

d. Check, recalibrate operating and safety controls. Design settings are noted on the particular job wiring diagram. (See system tests)

e. Inspect and clean all satellite equipment per manufacturer's recommendations.

f. Check compressor seal for refrigerant and excessive oil leakage. If a maintenance action is necessary, refer to the latest edition of the DBX Compressor Manual 6136. If necessary, an update to the latest seal design is recommended.

g. Check compressor thrust bearings by loosening coupling center and checking male rotor for axial float. If axial float exists, refer to Compressor Service Manual 6136 for thrust bearing service/replacement.

h. Insure compressor coupling is aligned.

j. Lubricate compressor motor (direct drive) per manufacturer's recommendations.

k. Perform "insulation resistance test" (Hermetic compressor/oil pump motors)

m. Remove condenser heads, and have tubes inspected for corrosion by a professional agency. Clean condenser and heat exchanger(s) as outlined in this manual. Failure to comply may result in system problems. Plug or replace tubes if required.

n. Check, re-adjust oil pump end clearance. Align oil pump motor coupling (direct drive oil pump).

6. 25,000 HOUR MAINTENANCE

a. Perform annual maintenance.

b. Replace compressor shaft seal with latest version.

c. Inspect/replace compressor unloader, injection tube, and slipper seal parts if abnormal operation exists.

d. Inspect/replace compressor unloader guide block if wear is evident. Check slide valve guide and spindle snap rings for security.

e. Check compressor balance piston/sleeve clearance. Replace if beyond limits or if there has been any changes in unit oil pressure.

f. Check rotors for radial and lateral movement. If movement is beyond pre-selected limits, take appropriate action or consult National Service.

g. Hermetic Motor

- Meg motor and compare with previous readings.
- Replace motor terminal bushings with latest design bushings if not previously updated. Re-meg motor after reassembly and record.

7. 50,000 HOUR MAINTENANCE

a. Repeat 25,000 hour maintenance.

b. Replace thrust bearing.

c. Hermetic motor inspection.

- Meg motor and compare with previous readings.

B. PERIODIC MAINTENANCE CONTINUED

- Have motor service engineer inspect motor. If any significant deterioration of epoxy, lashings, or insulation exists, arrange to have motor repaired by approved motor service company. Remeg motor after reassembly and record.
- Inspect hermetic motor bearings and thrust washers for abnormal wear.

8. 75,000 HOUR MAINTENANCE

A major disassembly and inspection of the compressor is to be made. The compressor condition will determine if it should be field rebuilt or scheduled for a factory exchange rebuild.

9. SEASONAL SHUT-DOWN MAINTENANCE

a. Shut down PCX Unit in normal manner and partially pumpdown system.
b. Perform annual maintenance.
c. If unit is located where ambient temperature will be below freezing, drain all water thoroughly and blow out tubes (flooded chiller) or vessel (direct expansion chiller) with compressed air.
NOTE: Simply draining is not sufficient.
d. Open disconnect switches.
e. Run the oil pump periodically to fill the pump seal cavity with oil. This will prevent refrigerant from leaking. (Direct Drive Units)

C. MAINTENANCE RECORDS

1. LOGS

It is recommended that permanent daily records of system operating conditions be recorded at least once a day. The records should be retained as they are invaluable in determining patterns of operational change that will indicate the need for maintenance or service. System design conditions are established by the readings entered when the unit is first installed. Dunham-Bush, Inc., Form No. 9181 Log Sheet (See Appendix A), will serve this function admirably.

NOTE: In addition to the Daily/Monthly Log sheets, annual and seasonal maintenance is required. (See Periodic Maintenance Section)

The locations on the unit from which data may be obtained are shown in Figures 18 thru 22 for a typical unit.

The log sheets should be reviewed and evaluated periodically to determine operational trends.

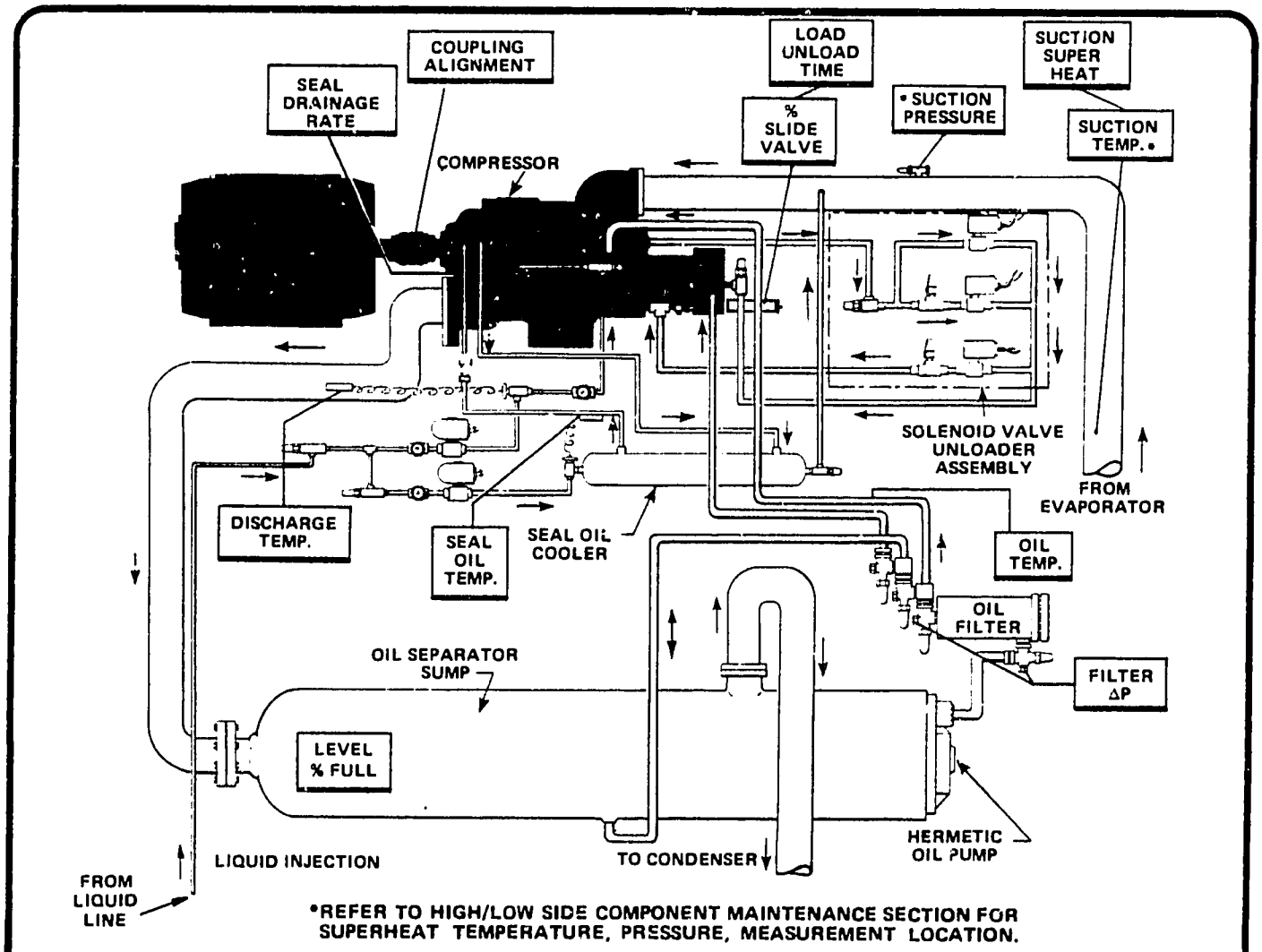

FIG. 18 TYPICAL DIRECT DRIVE COMPRESSOR WITH INTEGRAL SEPARATOR SUMP AND HERMETIC OIL PUMP

C. MAINTENANCE RECORDS CONTINUED

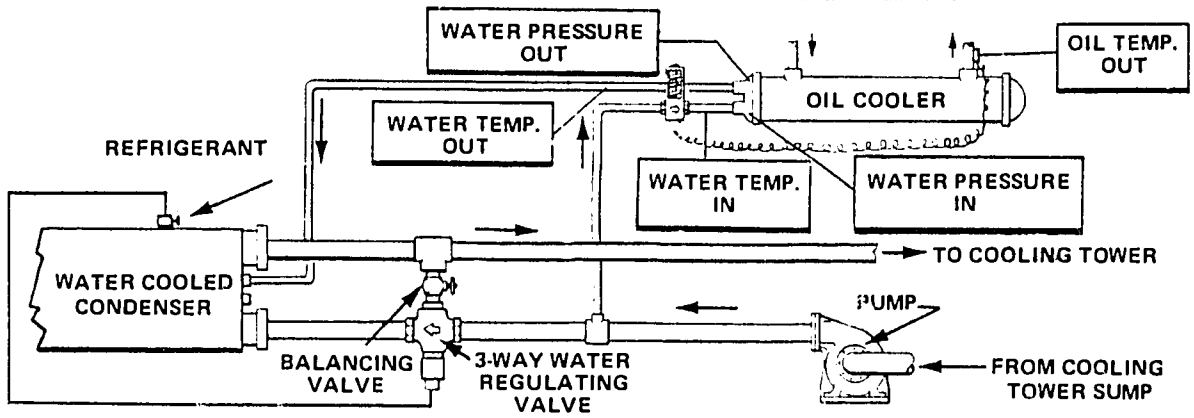

FIG. 19 TYPICAL WATER COOLED OIL COOLER (LOW TEMPERATURE APPLICATIONS)

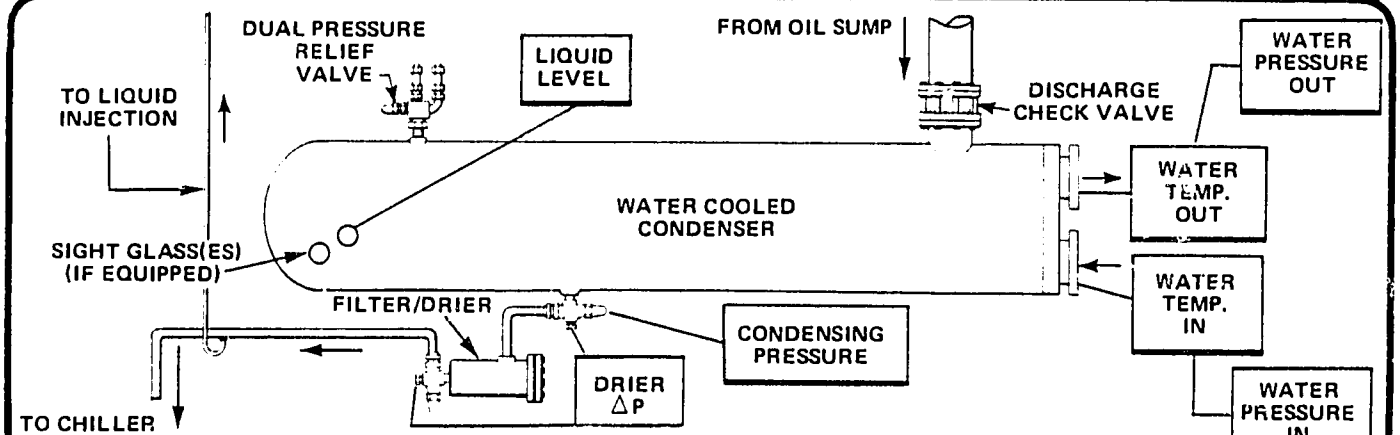

FIG. 20 TYPICAL SINGLE BUNDLE WATER COOLED CONDENSER

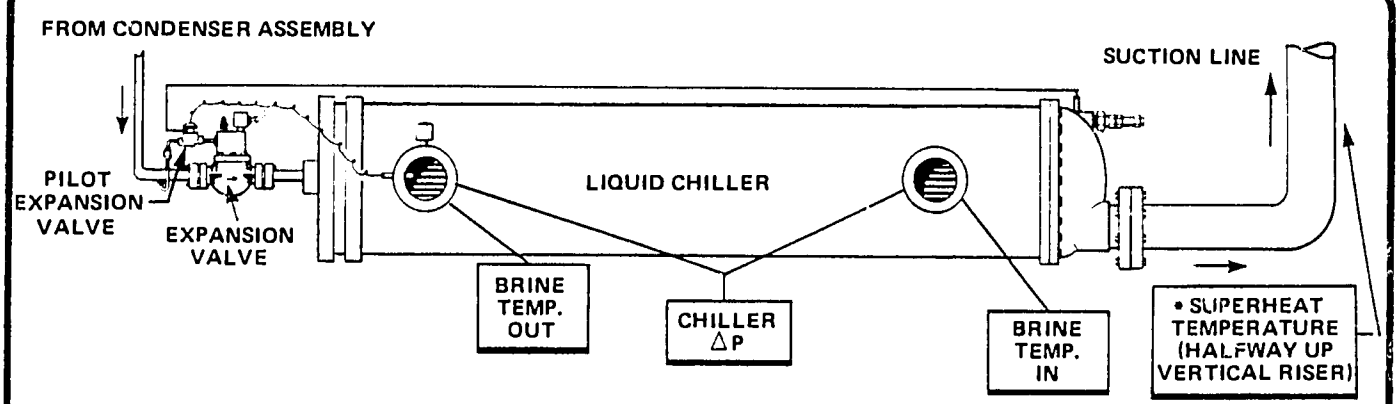

FIG. 21 TYPICAL DIRECT EXPANSION CHILLER

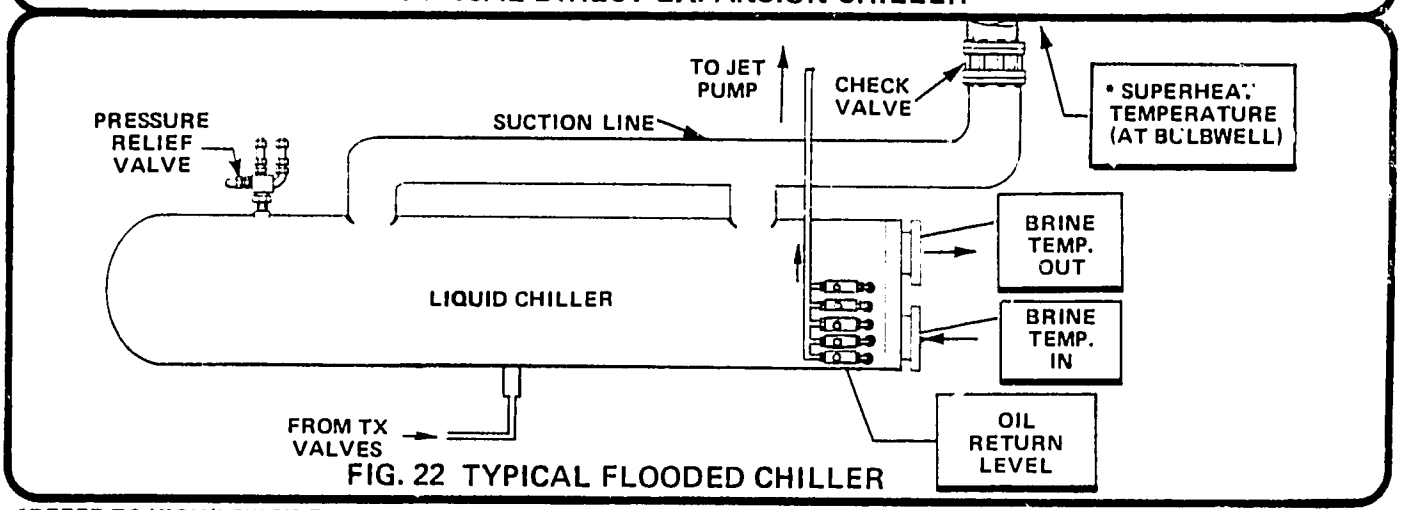

FIG. 22 TYPICAL FLOODED CHILLER

*REFER TO HIGH/LOW SIDE COMPONENT MAINTENANCE SECTION FOR SUPERHEAT TEMPERATURE, PRESSURE, MEASUREMENT LOCATION.

IV. MAINTENANCE

D. OIL REMOVAL/ADDITION

1. RECOMMENDED OILS

Dunham-Bush uses only two viscosity classifications; 150 SUS (Saybolt Universal Seconds) measured at 100°F for low temperature applications and 300 SUS measured at 100°F for high and commercial temperature applications. All other oil viscosities are not approved for use in Dunham-Bush compressors.

NOTE: Mixing of oil is not recommended. Oil should be thoroughly drained and replaced when changing oil brands. Consult factory for any other oil types.

The following Napthenic base oils are recommended.

	SST*	
	Low Temp.	Commercial or High Temp.
	(-40°F to 0°F) (-40°C to -17.8°C)	(+1°F to +50°F) (-17.2°C to +10°C)
COMPANY †	150 SUS (31.8 Cst)	300 SUS (64.6 Cst)
Sun Oil Company	Suniso 3GS	Suniso 4GS
Texaco	Capella B	Capella D

*Saturated Suction Temperature

These oils are subject to periodic change. Consult the latest edition of National Service Bulletin SR42.

2. APPROXIMATE OIL CHARGES FOR STANDARD PACKAGES

NOTE: Packages with non-standard vessel selections may have different oil charges. The oil capacities listed are for purchasing purposes only. Refer to Oil Replenishment Section for proper oil level.

	APPROXIMATE OIL CHARGE					
	Hermetic		Direct Drive		Direct Drive Heat Reclaim	
Model PCX -	U.S. Gallons	Liters	U.S. Gallons	Liters	U.S. Gallons	Liters
120	26	98.4	21	79.5	24	90.8
150	26	98.4	21	79.5	24	90.8
180	26	98.4	21	79.5	24	90.8
230	27	102.2	24	90.8	28	106.0
290	27	102.2	24	90.8	28	106.0
350	27	102.2	24	90.8	28	106.0
400	30	113.6	35	132.5	-	-
450	-	-	44	166.5	-	-
500	-	-	44	166.5	-	-
580	-	-	45	170.3	-	-
630	-	-	45	170.3	-	-
700	-	-	46	174.1	-	-
750	-	-	47	177.9	-	-

3. OIL REMOVAL

NOTE: If oil from sump has been tested and evaluated to be re-usable, ensure that the container is clean and can be properly sealed to prevent entry of contaminants.

SP-1 *(Oil Removal)*

1. Attach hose between oil sump drain valve and a clean, vented, 55 gallon (200 liters) drum.

2. Drain oil slowly until oil ceases to flow. Oil will foam up.

3. Change oil filter(s) (Refer to SP-17)

4. OIL REPLENISHMENT

NOTE: It is desirable to coordinate oil addition with system evacuation so that oil can be drawn in utilizing the partial vacuum. Oil should be drawn into the oil sump during the final stages of evacuation. (Refer to Evacuation/Dehydration Procedures)*(SP-7 thru SP-12)*

SP-2 *(Oil Replenishment, Partial Vacuum Method)*

1. Connect a service hose to the oil sump drain valve and to a vented container of new or re-usable oil.

CAUTION: Hose should be purged with oil and care must be exercised not to incorporate air into the system.

2. Charge sump until oil level in sump is 1/3 to 1/2 of the (top) sight glass. Continue evacuation procedures.

SP-3 *(Oil Replenishment Portable Pump Method)*

CAUTION: For adding oil to a system under pressure, the portable pump should have a design working pressure of 150 to 200 PSIA, (1034.2 to 1379 kPa), and a capability to pump to 150 PSI (1034.2 kPa) from atmospheric pressure. Recommended capacity is 2 to 3 GPM (76 to 114 liters/min.)

NOTE: To facilitate sight glass inspection, a flashlight may be used.

1. With unit off and oil at normal temperature (100°F to 150°F), (37.8°C to 65.6°C), inspect for proper oil level to be at 1/3 to 1/2 of the (top) sight glass; normal level will vary from 1/2 full to just visible at the bottom of the glass.

2. Connect an adequately sized portable oil pump to oil sump drain valve, add oil from vented drum and insure absolutely no air enters the system.

3. Stop pump and close shut off valve when oil level in sump reaches 1/3 to 1/2 of (top) sight glass.

4. Disconnect pump and start-up PCX unit. If oil fails to return to sump causing shutdown due to loss of oil pressure, add additional oil and restart unit.

CAUTION: Do not overcharge system. System problems could result. Added oil must be removed once oil charge is returned to sump.

5. Shut down unit and observe sight glass after unit has stabilized. Drain off excess oil slowly.

E. TRANSFERRING/EVACUATING/CHARGING REFRIG.

CAUTION: All charging/evacuating procedures must only be performed by qualified commercial and industrial refrigeration personnel.

1. CHARGING/EVACUATING STATIONS

Adequate accessibility is provided on all packaged units for charging and evacuating. Careful consideration of the refrigerant state or quality must be employed before opening the valve for charging and evacuating procedures. Access may be obtained to the high and low side through:

- Dual pressure relief valve(s)
- Service shut-off valves (King, Queen Valve)
- Charging valves

CAUTION: Valve caps must be tightened when replacing to prevent refrigerant leakage.

1a. Dual Pressure Relief Valve

Vessels equipped with dual pressure relief valves enable service personnel to obtain access to the refrigerant vapor portion of the chiller or condenser.

FIG. 23 DUAL PRESSURE RELIEF VALVE

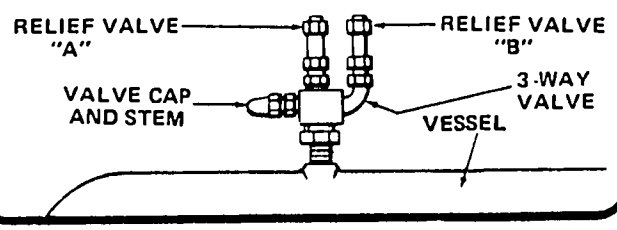

SP-4 *(Relief Valve Access)*

1. Isolate relief valve 'B' by closing off the three way valve stem clockwise until it seats. (See Figure 23)

2. Remove relief valve 'B'.

3. Install a charging hose adaptor in place of the removed relief valve.(adapter not supplied)

4. Connect one end of the hose to the adaptor insuring the hose is purged with refrigerant.

5. Return 3 way valve to original position and follow charging evacuating procedures.

1b. Service Valves

Service valves are located at the filter drier outlet (Queen Valve), and condenser outlet (King Valve) and may be used to obtain access for charging or transferring liquid refrigerant, and evacuating procedures.

SP-5 *(Service Valve Access)*

1. Backseat the valve to isolate plug tap from system.

2. Remove appropriate plug and attach hose.

3. Re-position valve stem and follow Charging/Evacuating Procedures as outlined in this manual

4. Backseat the valve and plug taps.

1c. Charging/Evacuating Valves

Units are equipped with charging valves located either on the suction line or directly on the compressor housing, as noted on the unit piping schematic.

SP-6 *(Charging Valve Access)*

1. Attach hose and purge by opening manual valve.

2 Follow Charging/Evacuating Procedures as outlined in this manual.

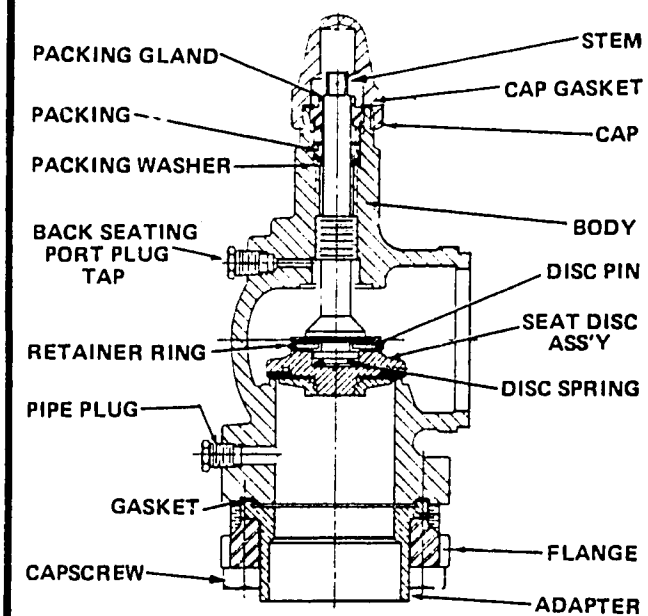

FIG. 24 TYPICAL SERVICE VALVE

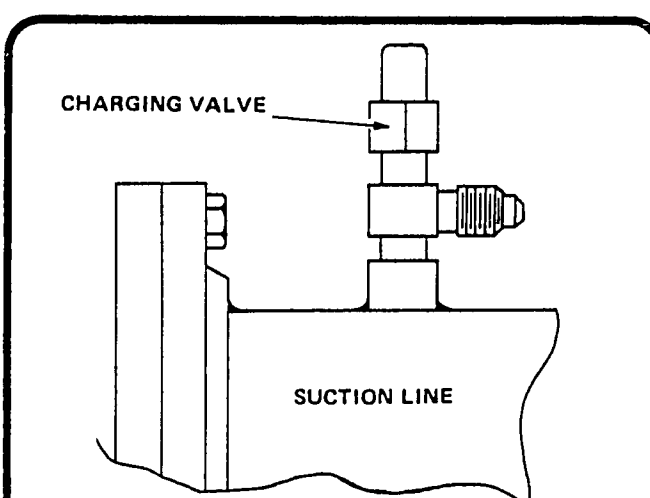

FIG. 25 TYPICAL CHARGING VALVE

2. TRANSFER (PUMPDOWN) OF REFRIGERANT TO CONDENSER OR EXTERNAL CONTAINERS

Most service work can be executed by isolating the component to be repaired, from the system. However, it may be required to pump and temporarily store the refrigerant in the condenser, or remove the charge completely. How the refrigerant is handled, is dependent upon equipment, time available, and the type of maintenance performed. The succeeding procedures SP-7 thru SP-11 must be executed in the order presented. The following must be adhered to for all transfer procedures:

CAUTION: Continuously weigh receiving container to be certain it is not filled more than 85% of its volumetric capacity to allow for thermal expansion.

NOTE: When removing refrigerant to external containers, it is recommended to pack the containers in dry ice.

E. TRANSFERRING/EVACUATING/CHARGING REFRIG.

2a. Partially Pumpdown System

Partially pumping down the system serves to transfer most of the refrigerant from the chiller to the condenser.

> **CAUTION:** Safety controls are not to be defeated or re-adjusted during pumpdown. Compressor motor starts are limited to 3 starts per hour.

SP-7 *(Partial Pumpdown)*

1. With the unit operating, and a partial load available, set the slide valve at minimum load position. Close the condenser shut-off valve (King Valve). If hot gas bypass is installed, close hot gas bypass manual valve recording number of turns.

2. After unit shuts down due to low pressure cut-out, restart unit after 20 minutes elapsed.

3. Unit will cycle off again on low pressure cut-out. The unit is now partially pumped down.

2b. Transfer Liquid Refrigerant From Chiller To Condenser or Containers (Flooded Type Chiller)

The remaining liquid refrigerant and residual oil must be transferred out of the chiller barrel before the gas is transferred.

> **CAUTION:** The chiller pressure must not go below the corresponding freezing point of water, or the brine being used. Approximately 65 to 75 psig (R-22) (448.2 to 517.1 kPa), should be maintained inside the vessel, until it is certain all liquid refrigerant has evaporated. Rapid removal of refrigerant will cause the chiller tubes to freeze and the possibility of bursting them exists. Rapidly boiling refrigerant also foams up the oil, which can freeze lower tubes.

NOTE: It may be helpful to monitor shell temperature beneath the chiller with a thermocouple. Another precaution (flooded chiller models) to avoid freezing is to remove the heads of the chiller and have the tubes fully blown out with compressed air, prior to refrigerant removal.

SP-8 *(Liquid Transfer, Flooded Chiller)*

1. Remove oil (refer to SP-1).

2. Connect a hose to the liquid connection at the bottom of the chiller vessel. Attach in line, a strainer, liquid refrigerant pump, and a sight glass.

3. Purge hose, and connect to the receiver (i.e. condenser, containers). Commence draining, maintaining pressure as much as possible until all the liquid is removed.

2c. Transfer Gas Refrigerant From Chiller To Condenser or Containers

SP-9 *(Gas Transfer From Chiller)*

1. Manually unseat the main expansion valve(s) and open hot gas bypass (if equipped) recording number of turns.

2. Connect the suction side of a portable condensing unit to the low (vapor) side of the system. Connect the discharge hose to the condenser vessel through the dual pressure relief valve (see SP-4) or to an external container.

3. Commence removal of the refrigerant until the suction pressure (chiller pressure) is slightly above atmospheric pressure.

2d. Transfer Liquid Refrigerant from Condenser to External Containers

SP-10 *(Transfer Liquid Refrigerant from Condenser)*

1. Connect a hose to the service valve at the condenser outlet. (See SP-5) Attach an in-line strainer, refrigerant pump and sight glass. Purge line and attach to a clean empty refrigerant container which is marked with the correct type of refrigerant.

2. Commence draining until the first cylinder is 85% full.

3. Remove container and repeat until all liquid refrigerant is removed, without dropping pressure below the corresponding freezing temperature of water.

2e. Transfer Gas Refrigerant From Condenser to External Containers.

SP-11 *(Transfer Gas Refrigerant from Condenser)*

1. Connect the suction side of a portable condensing unit through the condenser relief valve access. (See SP-4) Connect the discharge hose of the portable condensing unit to an external container.

2. Commence removal of refrigerant gas until the condenser vessel pressure is slightly above atmospheric pressure.

3. COMPLETE SYSTEM EVACUATION AND DEHYDRATION

For a complete system evacuation, it will be necessary to make up a manifold and evacuate from three evacuating stations simultaneously.

NOTE: It is absolutely necessary to use a true micron gauge. An ordinary compound gauge is not acceptable.

SP-12 *(Evacuation/Dehydration)*

1. Drain oil (refer to SP-1).

2. Transfer refrigerant to external containers (refer to SP-7 thru SP-11)

3. Pressure test the unit with dry nitrogen and R-22 to insure no leaks exist. (Refer to SP-37)

4. With the unit at atmospheric pressure, connect a vacuum pump to the system. Manually unseat the main expansion valve(s) and open hot gas bypass valve (if equipped).

5. Evacuate to 1,000 microns and break vacuum with dry nitrogen and R-22.

6. Change filter drier elements. (Refer to SP-29).

System Evacuation - continued

NOTE: To achieve best results, warm water or warm air should be recirculated through the water side of the evaporator and condenser.

7. System must be dehydrated down to 1,000 micron level at least three times, initially leaving vacuum pump on system at least 12 hours. Break vacuum twice with dry nitrogen. On final pull down to 1,000 microns, or lower, system pressure must not rise above 2,000 microns in four hours with vacuum pump isolated from system.

8. Fill oil sump with clean oil after third pull down utilizing the partial vacuum to draw in the oil. (Refer to SP-2)

9. Turn on oil heaters upon completion of dehydration. Break vacuum with dry refrigerant vapor.

4. CHARGING THE REFRIGERANT SYSTEM

When charging a fully evacuated system, the unit must be 1) gas charged initially, 2) liquid charged to 90% of design charge capacity and 3) charged under operation to full design charge capacity, as noted on the nameplate located at the control panel.

4a. Initial Gas Charging the Refrigerant System

NOTE: This is the initial procedure for charging a fully evacuated system, with the oil at the proper level.

CAUTION: Refrigerant gas must be charged until the internal system pressure corresponds to an evaporating temperature above freezing (R-22, 70 PSIG) (482.6 kPa), before liquid is charged. This will prevent freeze-up and bursting of tubes.

CAUTION: Chiller and condenser water pumps must be running and must maintain a minimum of 50% water flow.

SP-13 *(Initial Gas Charging)*

1. Manually unseat the main thermal expansion valve(s)

2. Slowly gas charge (2 PSI/minute) (13.79 kPa/min) at:
   a. Condenser vessel
   b. Chiller vessel

3. Continue gas charging until the pressure is stable throughout the system at a safe level. (R-22: 70 PSIG 482.6 kPa).

4b. Liquid Charging the Refrigerant System

NOTE. This procedure is for charging a unit that has a system pressure above the corresponding freezing temperature of water. Liquid refrigerant can be charged directly into an evacuated system only if water is drained thoroughly and the tubes (flooded chiller) or the shell (direct expansion chiller) have been fully blown out with compressed air.

CAUTION: Chiller and condenser water pumps must be running and must maintain a minimum of 50% water flow.

SP-14 (Liquid Charging the System)

1. Purge and connect a charging hose from refrigerant containers to the King valve (refer to SP-5).

2. Liquid charge condenser, exchanging containers until 90% of design charge is in the system. A liquid refrigerant pump may be employed. Insure a liquid seal exists in the liquid line to the thermal expansion valve(s) by observing the sight glass.

3. The remaining refrigerant must be charged while the system is operating (refer to SP-15).

4c. Adding to Refrigerant Charge

This procedure is used when an inadequate charge is suspected. Typical indications of an inadequate charge are bubbles in sight glasses (vaporized refrigerant), high suction pressure, high oil temperature, etc. Indications of an adequate charge at 100% load are:

- Discharge Superheat - Must maintain between 25°F (13.9°C) and 30°F (16.7°C) above saturated conditions.
- Refrigerant Quality - Moisture indicator sight glasses should be clear of bubbles when system is fully charged.
- Condenser Outlet Temperature (Subcooling) - System will maintain approximately 8°F to 10°F (4.4°C to 5.6°C) below saturated conditions when refrigerant charge is adequate.
- Oil Temperature (Water Cooled Oil Cooler, if equipped) - Oil temperature must be maintained at 110°F to 120°F (61.1°C to 66.7°C) entering compressor.
- Liquid Injection Feed (if equipped) - Liquid seal exists in feed line at sight glass.

  NOTE: It may be helpful to liquid charge the liquid injection line independently to initiate normal operation.

- Seal Oil Cooler Feed (Direct Drive Models) - Liquid seal exists in feed line entering cooler.

  NOTE: It may be helpful to liquid charge the feed line to the seal oil cooler independently to initiate normal operation.

SP-15 *(Adding to Refrigerant Charge)*

1. Manually set and hold compressor slide valve at 25% position using temperature load control (TLC) manual control selection switch.

CAUTION: Partial cooling load must be available to manually position slide valve to prevent shut-down from safety controls.

2. Connect container of the design refrigerant to the low side of the system.

3. Start-up PCX unit, open drum, valve and gas charge system until above conditions are met.

F. COMPONENT MAINTENANCE

1. COMPRESSOR/MOTOR ASSEMBLY

1a. Compressor

All inspection, maintenance, or repairs of the compressor must be done by an authorized, qualified Dunham-Bush, Inc. Service Representative as listed in the latest edition of Form Number 9822. If the customer has any reason to suspect a problem, he should contact the Dunham-Bush Service Representative for assistance. Failure to comply may jeopardize the warranty. Repair information may be found in the latest edition of the DBX Compressor Service Manual, Form No. 6136.

1b. Compressor Motor

The primary maintenance required on the hermetic compressor motor is to perform an insulation resistance test at periodic intervals. A permanent record of the megger test will serve to show any approaching motor problems. (Refer to SP-36) Direct drive motors must be lubricated per manufacturer's specifications and periodic insulation resistance tests are also recommended.

1c. Coupling Alignment

Shafts become misaligned as a result of many natural and unavoidable causes. Heat, vibration, bearing wear, the settling of foundations, etc., all tend to alter alignment. Periodic checks of the compressor coupling is recommended.

NOTE: The coupling should be hot when making alignment adjustments. Also the motor should be aligned to the compressor.

SP-16 *(Compressor Coupling Alignment)*

1. To check angular misalignment (Figure B) mount indicator (as shown on left flange) with stem on face of right flange. Rotate Equipment noting maximum and minimum indicator reading. Move equipment as necessary to reduce the total indicator reading to that shown below.

2. To check parallel misalignment (Figure C) set indicator stem on outer surface of flange. Rotate equipment noting maximum and minimum indicator reading. Move equipment as necessary to reduce indicator reading to that shown below. Be careful not to disturb the setting of Step 1.

NOTE: If it is necessary to remove the motor alignment pins, the motor should be repinned after the alignment corrections are made.

3. Repeat Steps 1 and 2 as necessary.

4. Coupling hubs to be spaced to dimension C, as shown in the table below.

5. This coupling should be rotated several revolutions to make sure no "endwise creep" in connected shafts is measured.

6. Tighten all bolts as shown in chart below.

7. When operating at full speed, both laminated rings should have a distinct and clearly defined appearance - not blurred when viewed from top and side.

1d. Motor Housing Heaters (Hermetic Units)

No maintenance is required on compressor housing heaters, except for replacement, if the heater element should fail. The heater may be removed from the housing, or well without disturbing the charge. There are two types of compressor housing heaters. The housing mounted type (heater pad) which requires a temperature resistant epoxy for installation, and a well type (insertion) which requires no other agent for assembly. All electrical service connections must be disengaged prior to installation. Refer to the unit wiring diagram.

FIG. 25 - COUPLING ALIGNMENT

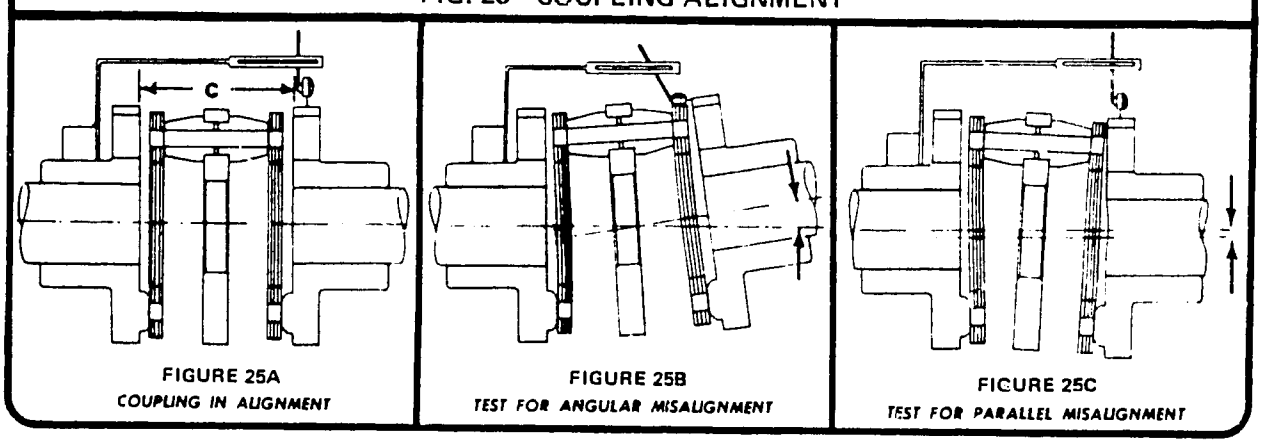

FIGURE 25A
COUPLING IN ALIGNMENT

FIGURE 25B
TEST FOR ANGULAR MISALIGNMENT

FIGURE 25C
TEST FOR PARALLEL MISALIGNMENT

THOMAS COUPLING SERIES	FORM-FLEX COUPLING SERIES	BOLT TORQUE				MISALIGNMENT (TIR)				DIMENSION C (SEE FIG. A)	
		THOMAS		FORM-FLEX		PARALLEL		ANGULAR			
		(Ft.-Lb.)	(kg-m)	(Ft.-Lb.)	(kg-m)	(In)	(mm)	(In)	(mm)	(In)	(cm)
163 DBZ-B	-	13	1.8	-	-	0.003	0.076	0.003	0.076	2 7/16	6.19
201 DBZ-B	-	25	3.5	-	-	0.005	0.127	0.005	0.127	2 15/16	7.46
226 DBZ-B	AK 30	43	6.0	40	5.5	0.005	0.127	0.005	0.127	3 13/16	9.68
263 DBZ-B	AK 35	63	8.7	40	5.5	0.007	0.178	0.007	0.178	4 5/16	11.0
301 DBZ-B	AK 40	95	13.1	80	11.1	0.007	0.178	0.007	0.178	4 7/8	12.38
351 DBZ-B	AK 45	175	24.2	80	11.1	0.007	0.178	0.007	0.178	5 7/8	14.90
350 - 51	-	95	13.1	-	-	0.007	0.178	0.007	0.178	6	15.24

1. Consult factory for complete engineering specification ASY-ES-1, if additional information is required.
2. TIR = Total Indicator Reading.
3. Compressor alignment data is subject to periodic change. Consult latest National Service Bullentin SR-109.

2. OIL SYSTEM COMPONENT MAINTENANCE

2a. Oil Filter Replacement

The need for replacement of the oil filter may be determined by measuring the pressure drop across the filter (6 psid [41.4 kPa] maximum). The normal pressure drop with a new element is 1 to 2 psid (6.9 to 13.8 kPa). Some units are equipped with an indicator for ths purpose.

FIG. 26 HORIZONTAL TYPE OIL FILTER

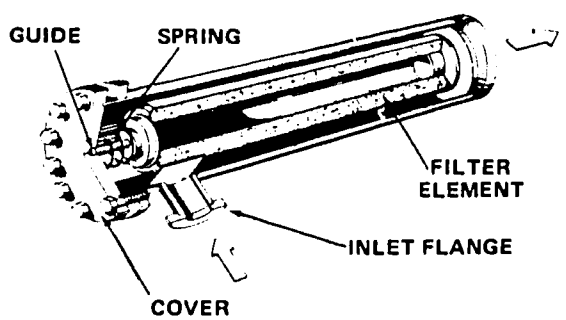

P-17 *(Oil Filter Replacement)*

1. With the unit off, close the oil filter service valves at the inlet and outlet sides of the oil filter assembly to be serviced.

2. Vent filter housing into a gallon (3.8 liters) container. Oil will foam up.

3. Remove cover (enclosure; vertical type), by evenly backing out the bolts.

NOTE: Do not cock cover (enclosure). Spring is in compression with the filter elements.

4. Remove filter element guide. Remove and inspect oil filter cartridge for metallic particles, babbitt or unusual amounts of dirt or sludge. Remove old gaskets (O-Ring).

5. Clean interior of oil filter housing with a lint free wiping cloth.

6. Inspect new oil filter element to ensure that the element is free from damage, and install new oil filter element. Ensure that the element is seated properly.

7. Install cover (enclosure) with new gasket or "O" Ring if necessary. Torque bolts evenly.

8. Purge oil filter thoroughly and open isolation shut off valves.

9. With unit operating, test for any leakage.

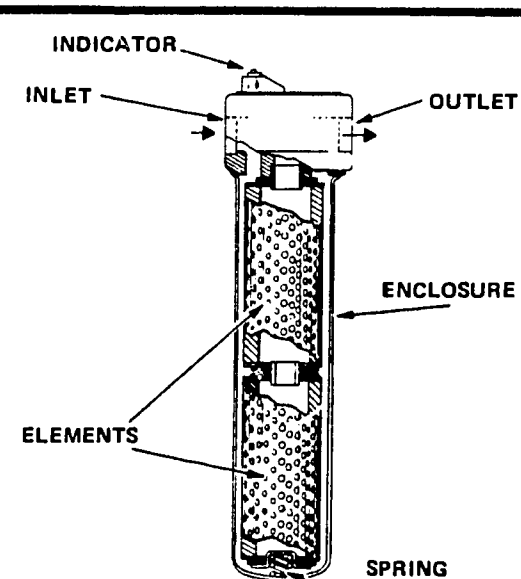

FIG. 27 VERTICAL TYPE OIL FILTER

2b. Oil Pump/Motor Assembly

The oil pump, whether direct drive or hermetically sealed are designed for long trouble free life, with a minimum of maintenance.

Hermetic pump applications require oil sump draining to obtain access to the pump assembly. External pumps may be serviced in-line. Anticipated maintenance for the pump assembly are:

- End Clearance Adjustment
- Motor coupling alignment (direct drive oil pump)
- Oil pump suction strainer cleaning

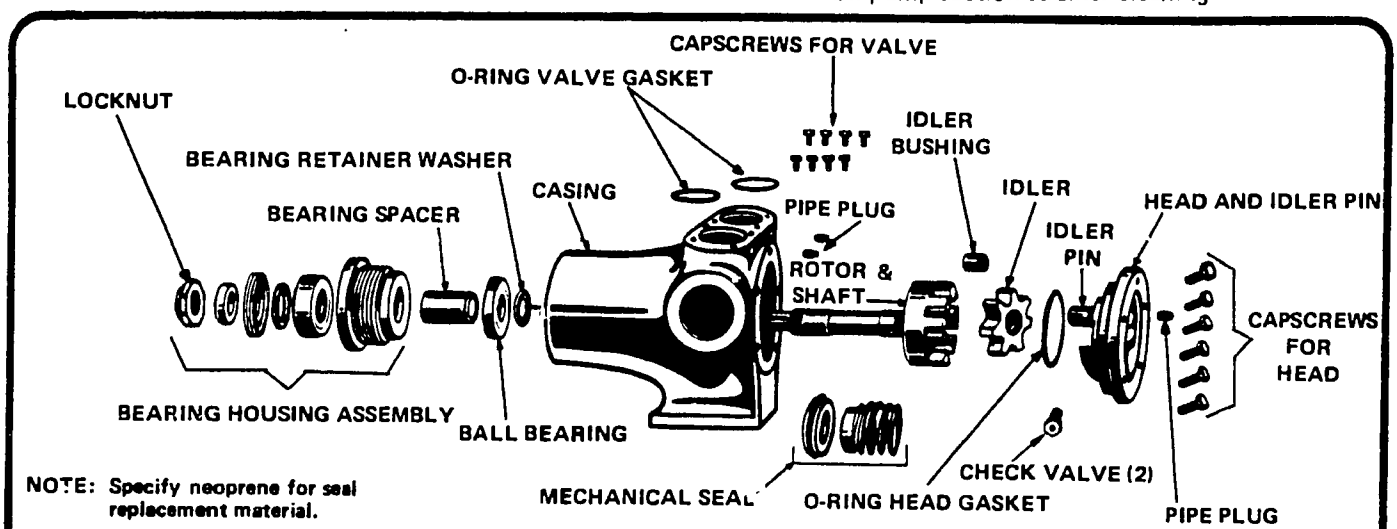

NOTE: Specify neoprene for seal replacement material.

FIG. 28 TYPICAL EXTERNAL TYPE OIL PUMP

F. COMPONENT MAINTENANCE CONTINUED

SP-18 *(Coupling Alignment, Direct Drive Oil Pump)*

1. Disconnect electrical service

2. Check parallel alignment by placing a straight-edge across the two coupling flanges and measuring the maximum offset at various points around the periphery of the coupling. Do not rotate the coupling. If the maximum offset exceeds the figure shown under parallel, realign the coupling.

3. Check angular alignment with a micrometer or caliper. Measure from the outside of one flange to the outside of the other at intervals around the periphery of the coupling. Determine the maximum and minimum dimensions. Do not rotate the coupling, the difference between the maximum and minimum must not exceed the figure given under "angular". If a correction is necessary, be sure to recheck the parallel alignment.

NOTE: For maximum life, keep misalignment values as near to zero as possible.

NET MAX. ALIGNMENT VALUES (EXTERNAL OIL PUMP)				
(Type N) Sleeve Size	Parallel		Angular	
	In.	cm	In.	cm
6	0.015	0.038	0.070	0.178
7	0.020	0.051	0.081	0.206
8	0.020	0.051	0.094	0.239
9	0.025	0.064	0.109	0.277

SP-19 *(End Clearance Adjustment, Direct Drive Oil Pump)*

1. Disconnect electrical service to oil pump.

2. Loosen set screws on bearing housing.

3. Counterclockwise rotation of the bearing housing will increase end clearance. Two notches on the bearing housing represent approximately 0.003 in. (0.076mm).

CAUTION: Be sure the shaft can be rotated freely and the set screws are tightened securely.

4. Align coupling and reconnect electrical service.

SP-20 *(Maintenance, Hermetic Oil Pump)*

1. Partially pumpdown unit. (Refer to SP-7)

2. Drain oil from oil sump housing into 55 gallon (208.2 liters) container. (Refer to SP-1)

3. Disconnect all electrical connections and properly tag.

4. Attach a calibrated pressure gauge to both high and low side to determine if the check valve has properly seated.

5. With sump at atmospheric pressure, remove the oil pump assembly. With sump/separator assemblies, remove separator mesh and clean with R-11. Inspect for damage and wear. Replace if required.

6. Remove motor rotor, inspect rotor and stator for wear marks. Inspect bearings for wear. If any wearing is evident, repair/replace pump assembly.

7. If original pump assembly is to be replaced, check rotor end clearance and insure clearance is to 0.002 to 0.003 in. (0.051 to 0.076 mm).

8. Assemble new or cleaned oil pump strainer to pump assembly using the existing connector tube assembly and attaching hardware, install pump assembly and O-ring using lifting eye bolt. Care should be taken to prevent damaging pump strainer. Use of two guide pins to support pump on its flange will aid in assembly.

9. Reconnect piping and electrical connections. Fill oil sump (refer to SP-2 and SP-3).

FIG. 29 TYPICAL HERMETIC TYPE OIL PUMP

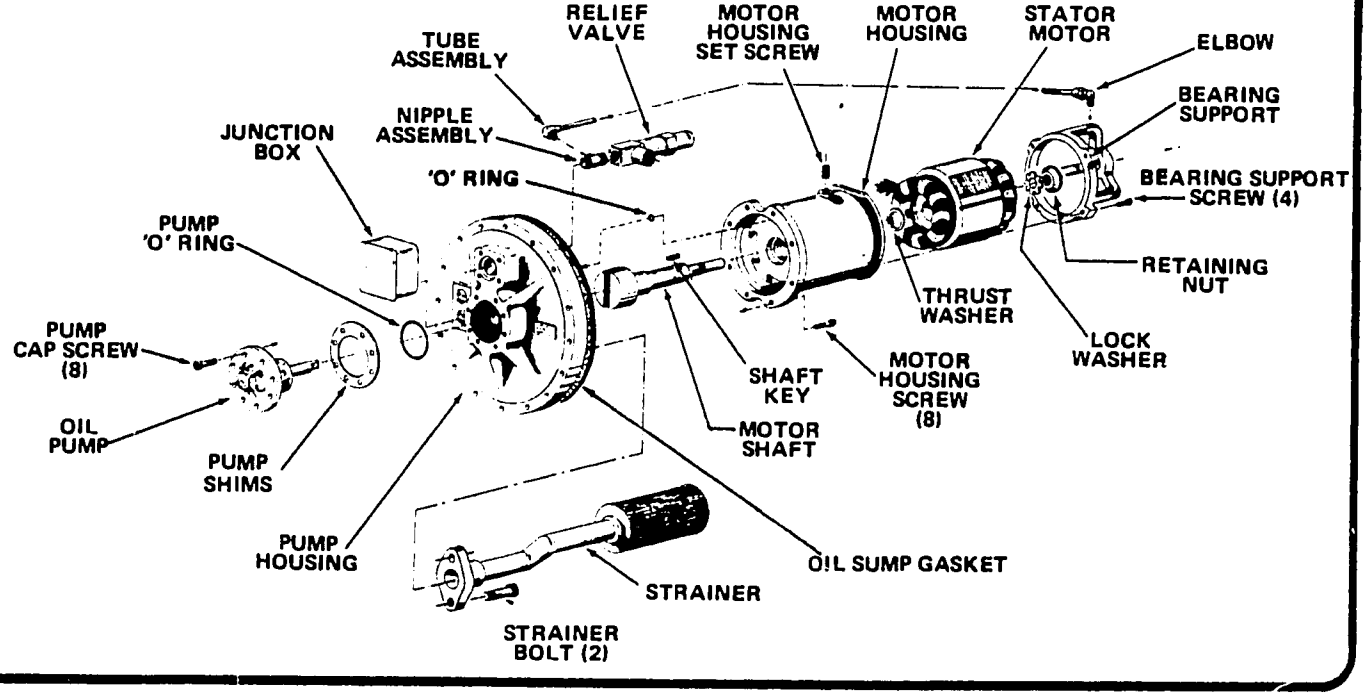

F. COMPONENT MAINTENANCE CONTINUED

2c. Oil Pressure Relief Valve

CAUTION: Problems seeming to require oil pressure relief valve adjustments can usually be traced to other items, such as plugged oil filters, worn pump, improper pump end clearance, a plugged or dirty seat, and/or a damaged seat.

- **Hermetic Type** - The hermetic type oil pressure relief valve is factory pre-set to crack open at 54 PSIG (372.3 kPa) pressure at the compressor, 100% load .

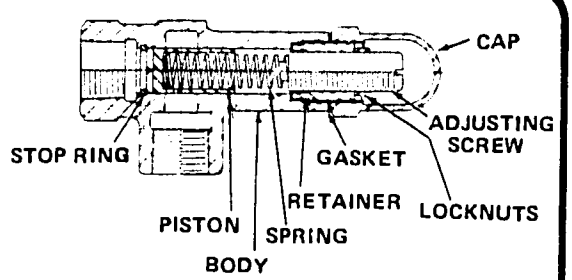

FIG. 30 TYPICAL HERMETICALLY LOCATED PRESSURE RELIEF VALVE

- **External Type** - The external type in-line oil pressure regulating valve is factory set to crack at 35 to 42 psig (241.3 to 289.6 kPa) (pressure at compressor, 100% load).

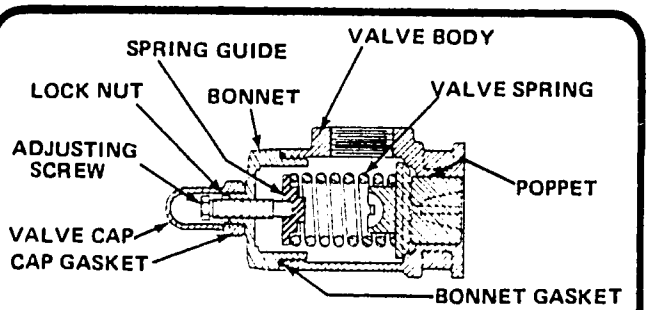

FIG. 31 TYPICAL EXTERNALLY LOCATED PRESSURE RELIEF VALVE

SP-21 *(Oil Pressure Relief Valve Adjustment)*

1. Remove the valve cap which covers the adjusting screw, and loosen the locknut(s), which locks the adjusting screw so the pressure setting will not change.

2. The adjusting screw should be turned in for increasing the pressure that the relief valve will open.

3. Adjust to design conditions.

SP-22 *(Oil Pressure Relief Valve Disassembly)*

1. Remove valve cap.

2. Measure and record length of extension of the adjusting screw.

3. Loosen the locknut(s) and back out adjusting screw until spring pressure is released.

4. Remove part components, clean and inspect for wear or damage. Repair or replace as necessary.

2d. Oil Sump Heaters

No maintenance is required on oil sump heaters, except for replacement, if the heater element should fail. The heater may be removed from its well without disturbing the oil or charge.

SP-23 *(Replacement of Oil Sump Heaters)*

1. With the power off, disconnect electrical cable and wiring.

2. Remove the oil sump heater element from the oil sump flange.

3. Install new oil sump heater element to the oil sump well.

4. Reconnect wiring and electrical cable.

2e. Evaporator Oil Return (Flooded Chiller, Low Temp. Direct Expansion Chiller)

The jet pump oil return taps on the chiller vessel are factory pre-set to design conditions. However re-adjustment may be needed after installation.

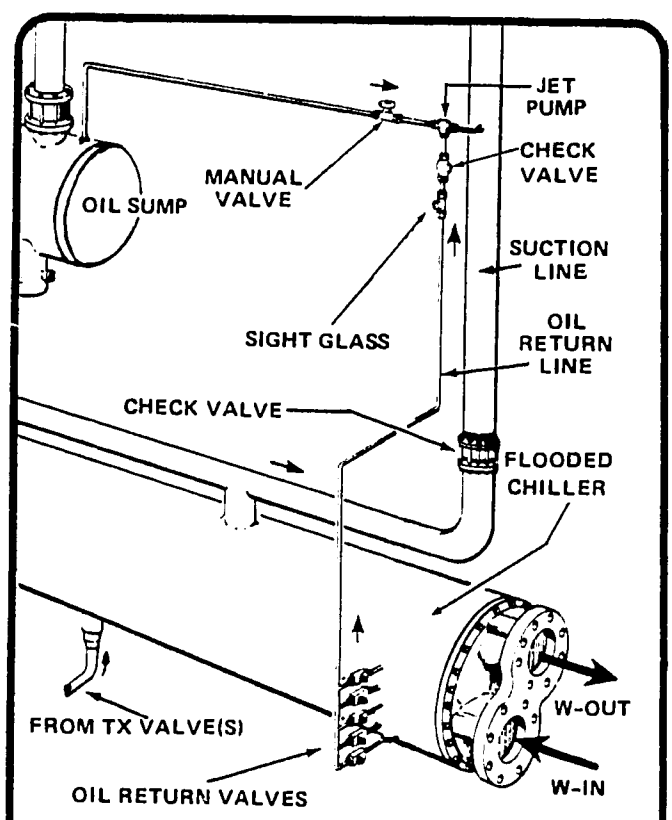

FIG. 32 TYPICAL EVAPORATOR OIL RETURN

- **Adjustment (Flooded Type)** - Once the maximum and minimum liquid refrgerant levels are established, adjustment may be made. All dip tubes that are within the liquid operating range are to remain fully open. All dip tubes that are never exposed to liquid refrigerant are to remain closed, to prevent capacity reduction. If extended pulldown is anticipated, the lowest dip tube should remain fully open.

- **Adjustment (Direct Expansion Type)** - Valve is to remain fully open on dip tube.

F. COMPONENT MAINTENANCE CONTINUED

3. OIL COOLING SYSTEM MAINTENANCE

3a. Liquid Injection Oil Cooling System

FIG. 33 TYPICAL LIQUID INJECTION OIL COOLING SCHEMATIC

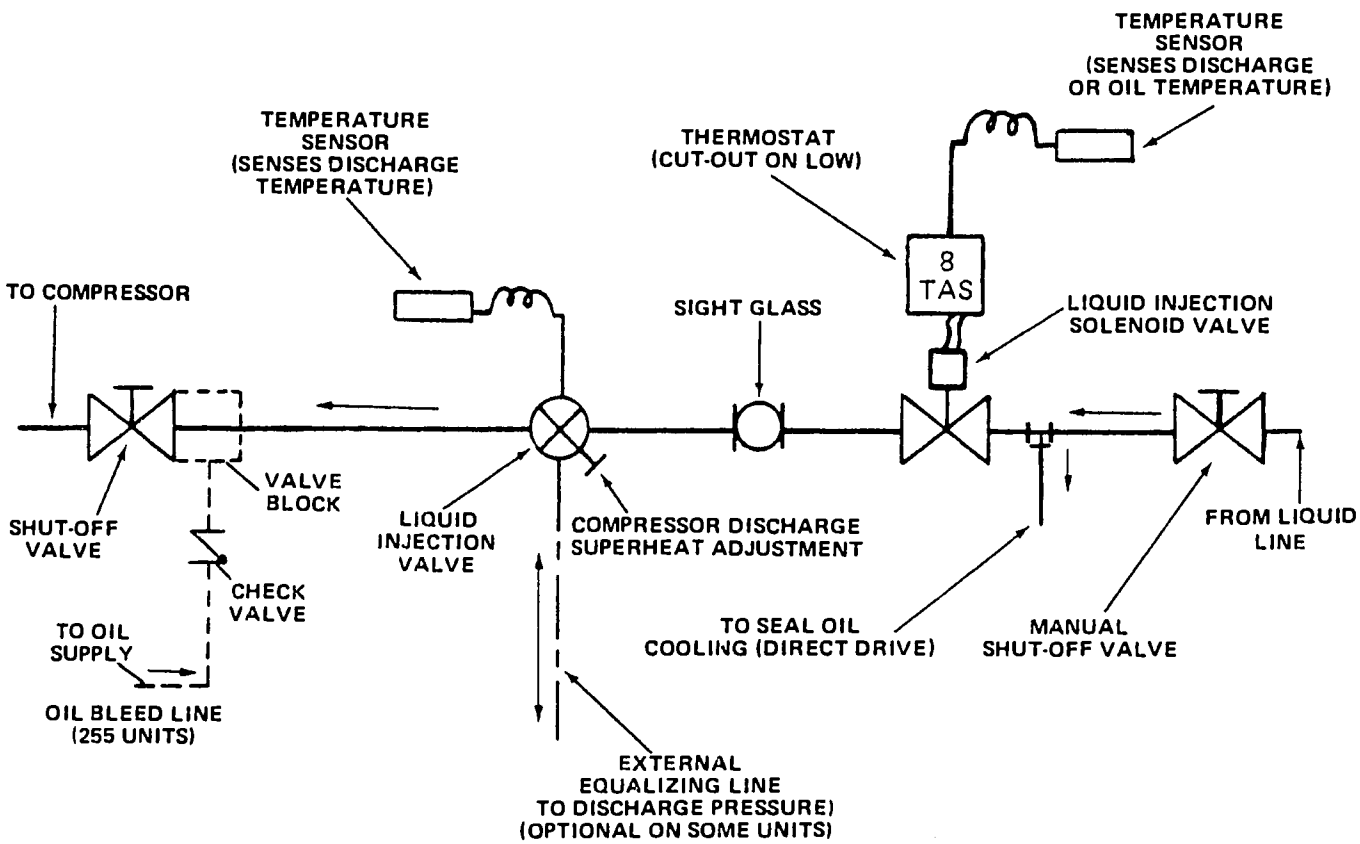

- **Normal Operation** - This system is designed to hold the oil temperature to the compressor inside the 135°F to 200°F (57°C to 93°C) range under all conditions of operation. This is done by a combination of controls. The liquid injection valve is factory adjusted to provide 40°F to 50°F (22°C to 28°C) discharge superheat at 100% load and design head pressure. That is the discharge temperature that will be controlled at 40°F to 50°F (22°C to 28°C) above saturated discharge temperature.

EXAMPLE: At 105°F (41°C) condensing temperature and 100% load, the discharge temperature will be controlled at 145°F to 155°F (63°C to 68°C) at 100% load. At 115°F (46°C) condensing temperature the discharge temperature will be controlled at 155°F to 165°F (68°C to 74°C) at 100% load.

At low loads, the superheat provided by the liquid injection valve will decline to approximately 25°F (14°C) and in the usual system the head pressure will also rebalance lower.

EXAMPLE: 10% load, 90°F (32°C) C.T. the liquid injection valve will control at 115°F (46°C). It is preferable to maintain a higher value to prevent oil dilution, so under these conditions, the thermostat will cycle the solenoid valve to maintain 140°F ± 5°F (60°C ± 3°C) oil temperature.

> **CAUTION:** The thermostat setting should not be altered in the field. If the unit is stopped by the thermostat, the cause should be determined and corrected.

- **Abnormal Operation** - If the liquid injection valve fails in the closed position the unit will cycle off on the oil temperature thermostat, or the oil pump motor thermostats (or hermetic motor inherent protector, where applicable). If the liquid injection valve fails in the open position, the thermostat and solenoid will take over control until the liquid injection valve can be repaired.

- **Settings** - Thermostat: As noted on the unit job wiring diagram. TX Valve: Adjusted to maintain 40°F to 50°F (22°C to 28°C) above saturated discharge temperature (100% load, design conditions) minimum.

NOTE: Heat transfer paste must be used in the bulbwell.

103

F. COMPONENT MAINTENANCE CONTINUED

3b. Water Cooled Oil Coolers

The water cooled oil coolers require periodic cleaning of the water side to assure maximum efficiency. It is recommended that the tubes are cleaned out at the same time that the condenser is cleaned. (Refer to Condenser Maintenance)

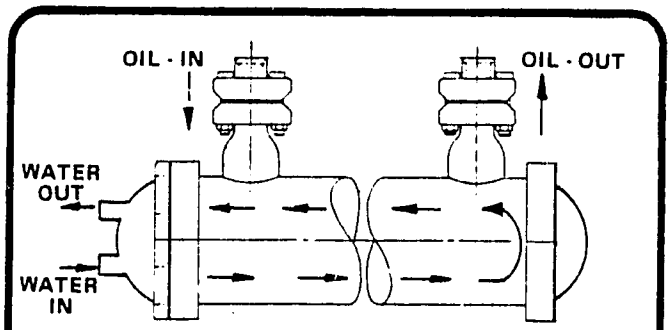

FIG. 34 TYPICAL TWO-PASS WATER COOLED OIL COOLER

- **Oil Cooler Water Regulating Valve** - These valves are factory adjusted but may require periodic re-adjustment if too high an oil temperature occurs that is not attributed to oil cooler fouling or oil pump problems. This valve should also be flushed out when the oil cooler is cleaned.

SP-24 *(Oil Cooler Water Regulating Valve Adjustment)*

1. To raise the temperature opening point, turn adjusting screw counterclock wise; to lower the temperature opening point, turn adjusting screw clockwise.

NOTE: Temperature closing point of valve is non-adjustable. Temperature actuated valves close approximately 3°F to 5°F (1.7°C to 2.8°C) below opening point.

SP-25 *(Oil Cooler Water Regulating Valve Flushing)*

1. Lift range spring follower with screwdrivers at two sides of lower spring cap to open valve.

2. Backflush oil cooler, holding valve open (this procedure should not affect valve adjustment).

3c. Seal Oil Cooler System (Direct Drive Models)

CAUTION: The thermostat setting should not be altered in the field. If the unit is stopped by the thermostat, the cause should be determined and corrected.

- **Normal Operation** - This system is designed to hold the temperature of the oil being pumped to the seal to 115°F ± 5°F (46°C ± 3°C), under all conditions of operation by adjustment of its thermal expansion valve.

- **Abnormal Operation** - If the temperature operated expansion valve fails in the closed position, the unit will cycle off from the oil temperature thermostat, which senses the oil temperature out of the seal oil cooler. If the temperature operated expansion valve fails in the open position, the heat exchanger may flood through and the oil will be overcooled. The seal oil cooling system in conjunction with the liquid injection system will not perform properly if flashing liquid is supplied to the expansion valves.

- **Settings** - Thermostat: 130°F (54.4°C) cut out, 127°F (52.8°C) cut in. Temperature operated expansion valve: 115°F ± 5°F (46.1°C ± 2.7°C) oil temperature at bulbwell.

SP-26 *(Seal Oil Temperature Adjustment)*

NOTE: When adjusting the temperature setting on the thermal expansion valve to maintain seal oil temperature time must be allowed for the system to react and stabilize before further adjustment.

1. With a thermo-couple properly insulated and orientated at the thermal expansion valve bulbwell (on oil line) monitor the oil temperature.

2. Clockwise rotation of the temperature adjustment will lower oil temperature. Adjust accordingly.

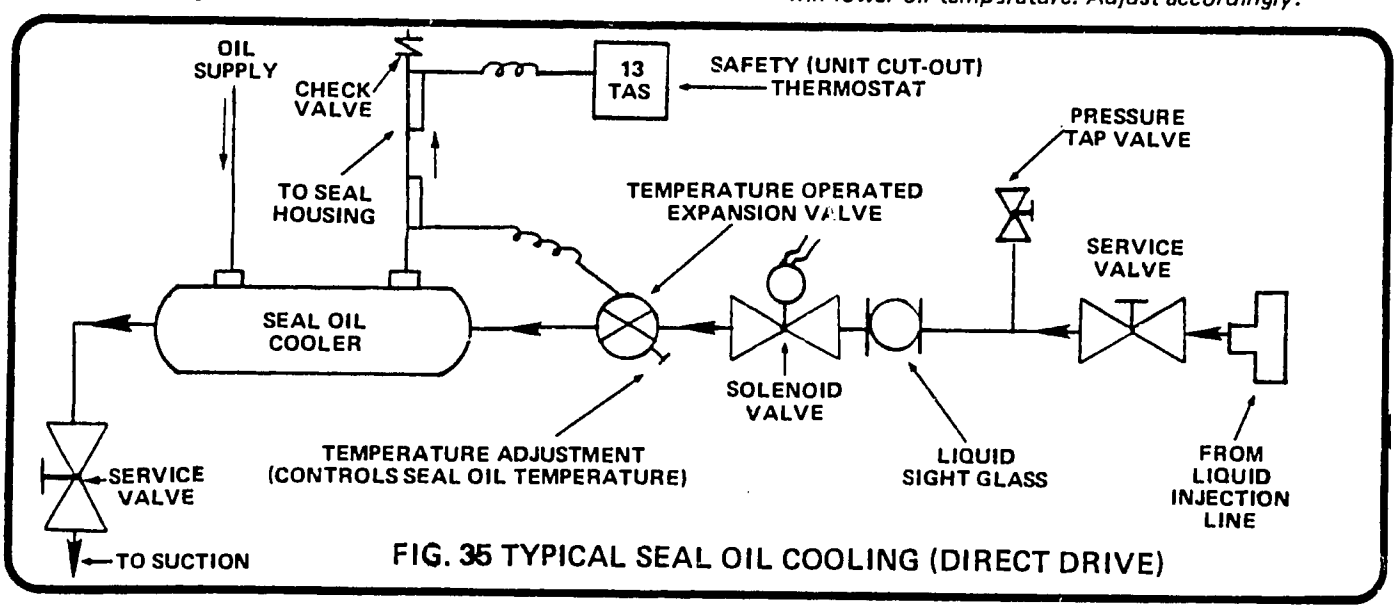

FIG. 35 TYPICAL SEAL OIL COOLING (DIRECT DRIVE)

F. COMPONENT MAINTENANCE CONTINUED

4. HIGH/LOW SIDE COMPONENT MAINTENANCE

4a. Condenser Cleaning

To assure optimum efficiency, the condenser water tubes should be cleaned of scale, sludge, and slime deposits. Individual water conditions will determine how often the tubes are cleaned. One indication of tube fouling, is rising condensing pressures not attributed to air or other causes. There are two methods of tube cleaning.

1. Mechanical - Using brushes to remove loose material deposits.

2. Chemical - Flushing solvent to remove scale deposits.

NOTE: It is recommended that only a reputable professional chemical cleaning organization be used for the cleaning of the condenser. Damage could result to the heat exchanger from the use of an improper, solution or from exposure for too long a period.

SP-27 *(Mechanical Cleaning of Condenser)*

NOTE: Head gaskets need not be renewed after each head disassembly operation. Gasket must be replaced if it is physically disfigured or otherwise deteriorated.

1. Isolate water side of condenser, vent, drain and remove heads.

2. Remove loose material which has settled in the tubing with brushes. Flush thoroughly with fresh water, drain and restore heads and piping to vessel, torquing nuts evenly. Insure no entrapped air exists by venting high points of water system.

4b. Condenser Tube Plugging

Plugging has long since been accepted as standard service procedure. A maximum 5% of the total number of tubes may be plugged. The recommended method of repair can be performed without pumping out the refrigerant if due care is exercised.

SP-28 *(Tube Plugging)*

1. With unit off, shut down the condenser water flow.

2. Drain condenser water supply and return piping and remove both heads.

3. Conduct leak test (refer to SP-37)

4. Drill and tap tube sheet for 1/2 inch pipe plug or tapered plug and plug accordingly.

5. Install heads, with new gaskets if required. Connect water piping and fill condenser water supply.

6. Start pump and vent water system of entrapped air at high points of piping, and at vessel heads.

7. Add to refrigerant charge if necessary. (Refer to SP-15)

8. Check moisture indicators for evidence of water and change filter drier elements if necessary.

- **Condenser Relief Valves** - The condenser relief valve is adjusted and sealed at the factory. No maintenance is anticipated. However, if the relief valves do blow off at the design pre-set pressure, the cause should be determined and the relief valves should be replaced if they do not properly re-seat.

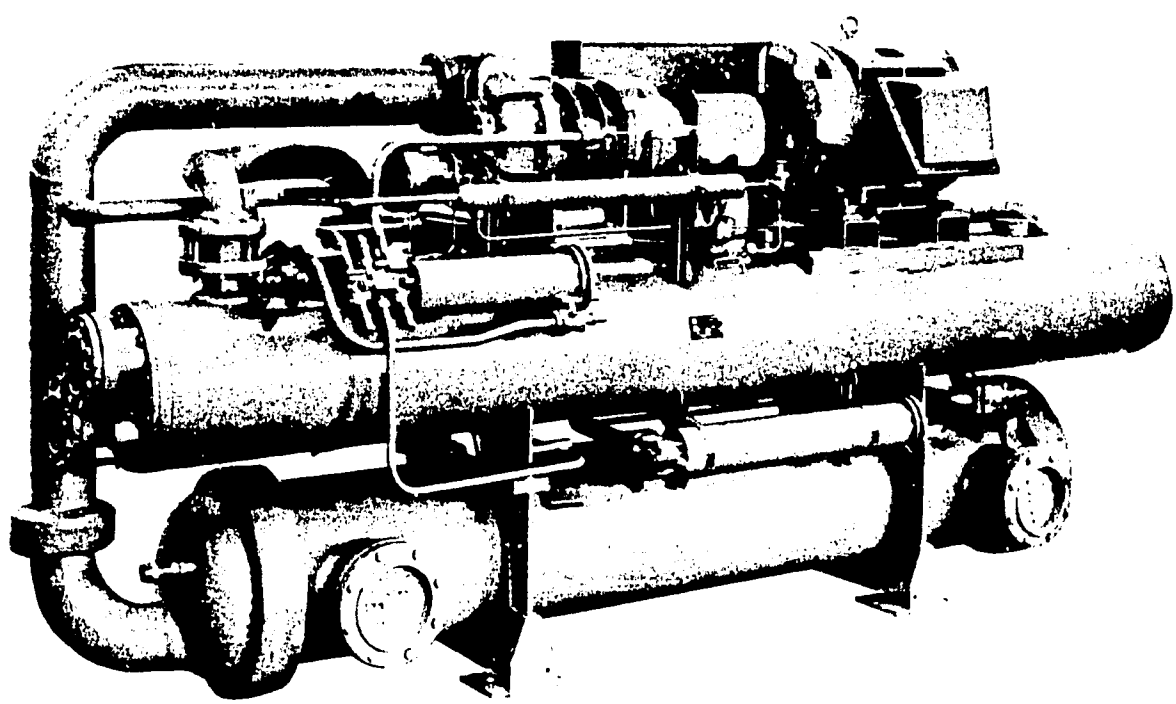

PCX-O DIRECT DRIVE PACKAGED CHILLER

F. COMPONENT MAINTENANCE CONTINUED

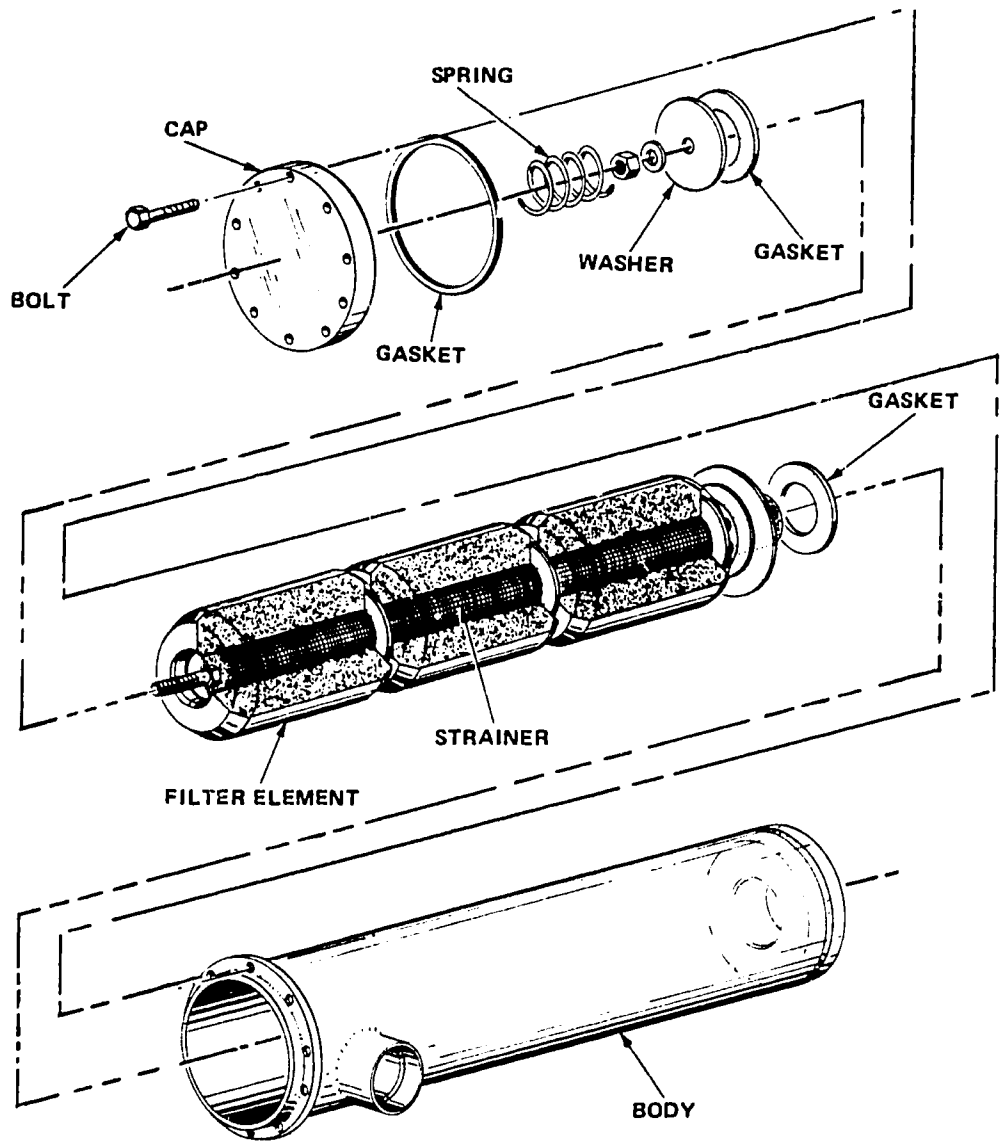

FIG. 37 TYPICAL REFRIGERANT FILTER DRIER

4c. Filter Drier Replacement

The filter drier elements should be replaced at scheduled intervals, when a specific maintenance action requires, or when moisture is evident in the system. The maximum operational pressure drop across the filter drier is 5 PSI (34.5kPa)..

SP-29 *(Filter Drier Replacement)*

1. Partially pumpdown system (Refer to SP-7)

2. Close both manual shut-off valves to isolate the filter drier.

3. Slowly vent enclosure to atmospheric pressure by opening plug.

4. Disassemble the drier assembly, discarding the cartridge elements and gaskets. Remove bolts evenly as spring is in compression to flanged cover.

5. Clean the housing and internal parts thoroughly. Inspect for damaged or deteriorated parts. Replace as needed.

6. Assemble the filter drier and torque bolts evenly.

7. Purge drier assembly and open isolation valves.

8. With the unit operating, check for leaks with a leak tester.

Once every two years, an inspection of the chiller tubes should be made, and the tubes cleaned if necessary. (flooded chiller models, clean inside tubes; direct expansion chiller models, clean outside of tubes).

4d. Cleaning Chiller

Because the chiller water or brine is a closed system, less frequent cleaning of the chiller tubes is required.

4d. Cleaning Chiller - continued

NOTE: It is recommended that only a reputable professional chemical cleaning organization be used for the cleaning of the chiller. Damage could result to the heat exchanger from the use of an improper solution, or from exposure for too long a period.

- **Chiller relief valve(s)** - The chiller relief valve is adjusted and sealed at the factory, no maintenance is anticipated. However, if the relief valve does blow-off at the design pre-set pressure, the cause should be determined and the relief valve should be replaced if it does not properly re-seat.

4e. Brine Maintenance

The chiller cooling medium must be periodically checked and maintained at design percent concentration, for a freeze point at least 10°F (6°C) below minimum saturated evaporator temperature. The actual freeze point may be determined by obtaining the specific gravity (with a hydrometer) and the temperature of the brine. With this data obtained, the percent concentration and freeze point may be determined from curves available from the brine manufacturer.

WARNING The factory is not responsible for damage due to chiller freeze-up as a result of negligent periodic maintenance of brines.

- **Chloride Brines** - In addition to proper freeze point, chloride brines require special precautions. A rust inhibitor must be used in adequate quantity and the brine PH must be checked and adjusted periodically to prevent potential chiller corrosion. Brine PH must be maintained between 7.5 and 8.0 and must be adjusted before filling chiller.

NOTE: Consult brine manufacturer or a professional agency for mixing the solution, adjusting PH, and proportioning the rust inhibitor.

4f. Pilot Thermo Valve

The pilot thermo valve is located on a branch liquid line and is used in conjunction with the pilot operated solenoid thermal expansion valve. The pilot thermo valve is factory pre-set to maintain 10°F to 15°F (5.6°C to 8.3°C) superheat (direct expansion chillers) or 0 to 5°F (0 to 2.8°C) superheat (flooded chillers). Superheat is the temperature increase of the refrigerant gas above the saturation temperature at the existing pressure. The superheat setting can be re-adjusted, if required, to improve system performance.

- **Pressure and Temperature Measurement** - The suction gas temperature should be measured on the suction line at the pilot thermo valve bulbwell and must be insulated from ambient air temperature. Units that locate the bulb in the leaving chilled water or brine flange require temperature measurement on the suction line halfway up the vertical riser on the side of the pipe.

CAUTION: The orientation of the thermocouple is critical for temperature measurement. Do not locate the thermocouple on any elbows.

The pressure may be measured by installing a calibrated gage at a gage connection closest to the temperature measurement. Both pressure and temperature measurements must be taken either upstream or downstream of the check valve.

SP-30 *(Superheat Adjustment)*

1. To increase superheat (decreases flow and reduces suction pressure), turn adjustment screw clockwise two full turns. Allow time for the system to react.

NOTE: As measured superheat decreases with a partial load, these adjustments should be made at 60% load or above. (With a dual pilot thermo valve arrangement, the load must be manipulated for each setting.)

2. Observe for increased superheat; adjust accordingly until design superheat is obtained.

- **Maintenance** - The only maintenance required for the pilot thermo valve is inspection, cleaning or replacing the cage assembly, and/or replacing the power assembly.

SP-31 *(Thermo-Expansion Valve Dissasembly)*

NOTE: The liquid line must be at atmospheric pressure before disassembly.

1. Remove the two cap screws, lift off the power assembly and remove the cage assembly.

2. Compress the cage spring to inspect pin and seat. If either are worn or eroded, replace cage assembly.

3. Check power assembly by pressing finger against buffer plate; replace assembly if plate is easy to move or depress.

CAUTION: Be sure all three gaskets are replaced in their proper places on the cage; that the two lugs on the cage assembly feed into their grooves in the power assembly; and that valve parts are not forced together.

F. COMPONENT MAINTENANCE CONTINUED

FIG. 40 TYPICAL PILOT THERMO VALVE

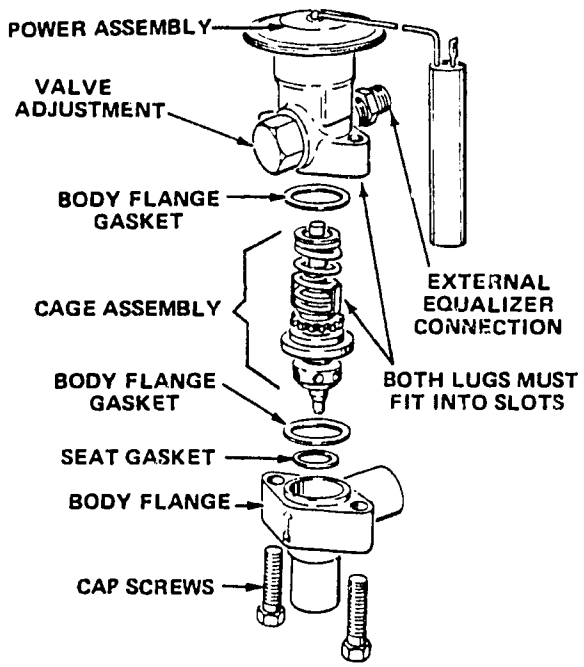

4g. Pilot Operated Solenoid Thermal Expansion Valve(s) (Main)

No adjustment of the pilot operated solenoid TX valve is necessary. This valve may be manually unseated by turning the manual opening stem beneath the seal cap on the top of the valve in a clockwise direction, until a stop position is reached.

NOTE: Always return the manual stem to the original position before starting the unit.

- **Maintenance**

NOTE: The most expedient method for inspection, cleaning or replacing parts would be to repair them in place.

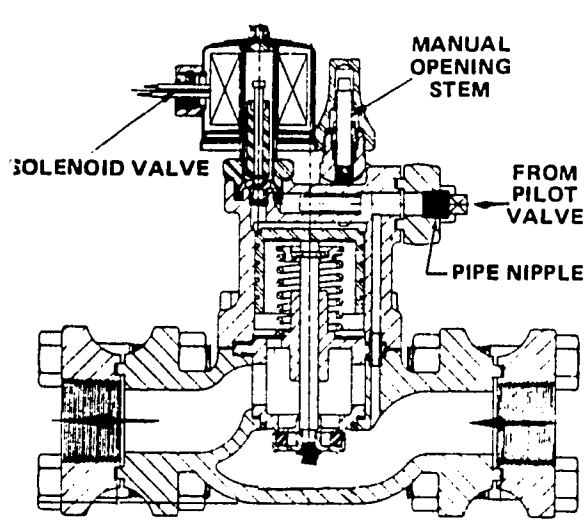

FIG. 41 TYPICAL P.O.S. THERMAL EXPANSION VALVE

SP-32 *(Disassembly/Maintenance P.O.S. Valve)*

1. Remove the solenoid coil.

2. Remove four cap screws, lift off upper body. Remove piston, inspect piston, rings, cylinder wall; check for free movement of piston in cylinder; wipe clean, oil all surfaces. Clean bleed port in top of piston.

3. Remove cage assembly, compress cage spring and examine valve disc, restrictor plug and seat; replace cage assembly if valve disc or seat are cut or eroded.

4. Re-assemble, insert cage with gaskets. Carefully place piston with rings in upper body. Re-assemble unit and tighten cap screws evenly. Replace pilot line connection, test for leaks and re-install.

5. Take apart the solenoid valve assembly. Check seat for wear, dirt, rust, etc. Replace if required.

TYPICAL THROTTLING ARRANGEMENT (1) PILOT, (1) MAIN EXPANSION VALVE

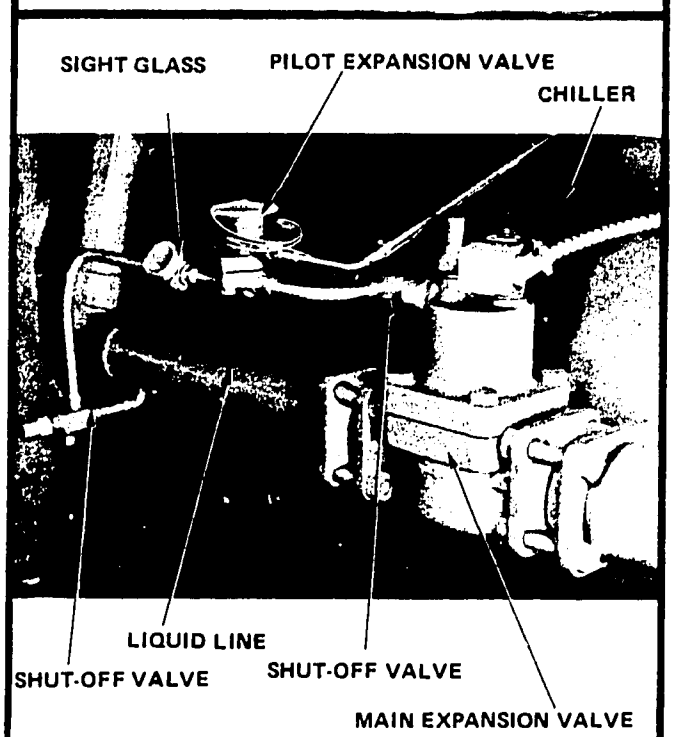

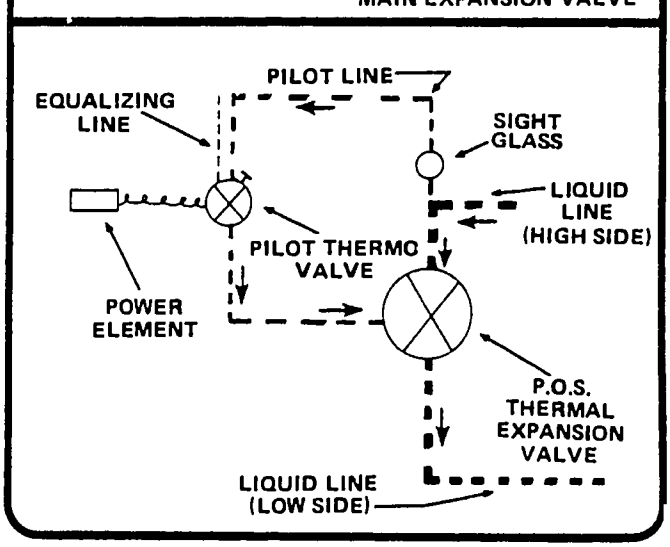

FIG. 42 TYPICAL THROTTLING ARRANGEMENTS

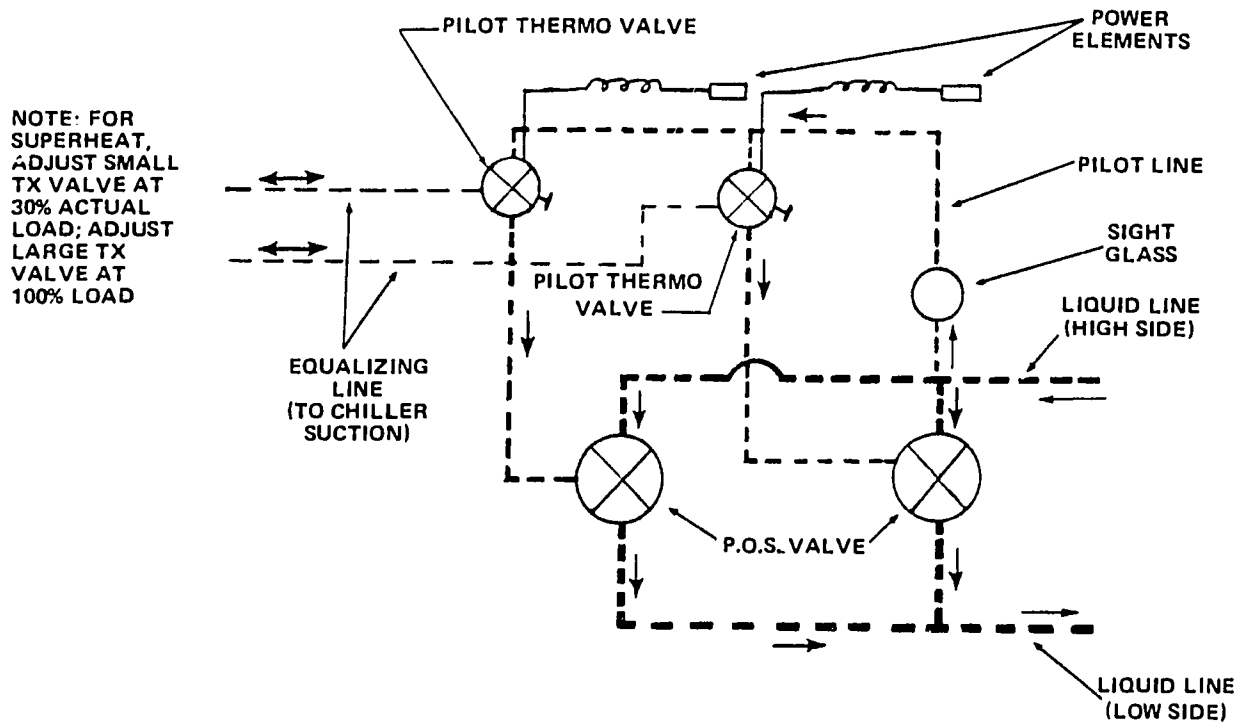

SCHEMATIC - (2) PILOT THERMO VALVES AND
(2) PILOT OPERATED SOLENOID THERMAL EXPANSION VALVES.

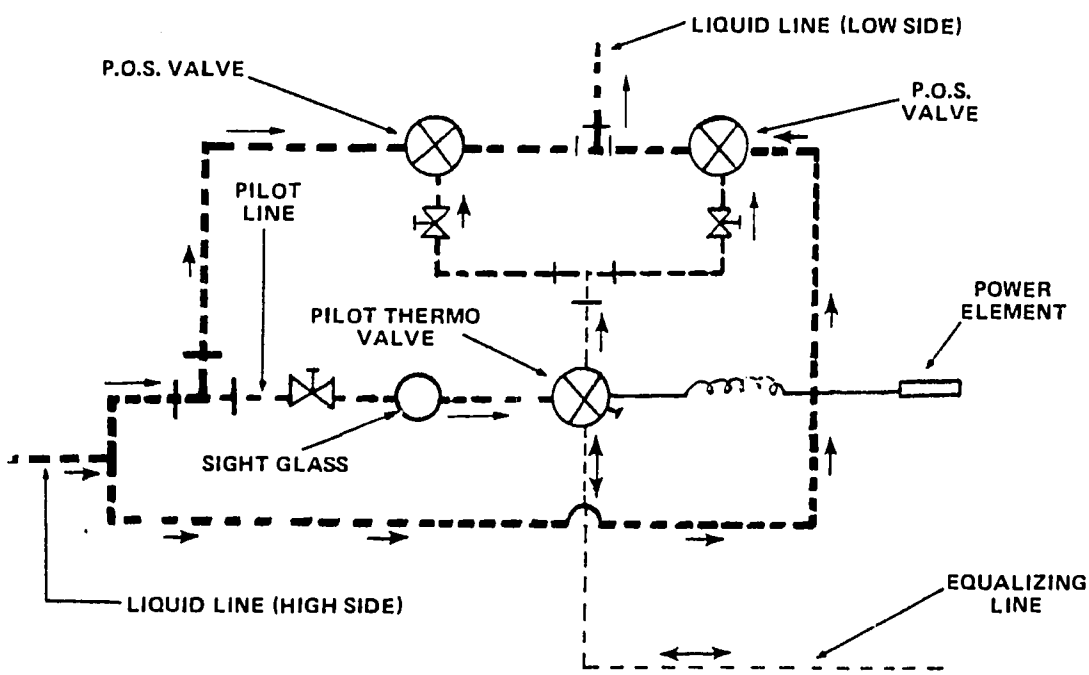

SCHEMATIC - (1) PILOT THERMO VALVE AND
(2) PILOT OPERATED SOLENOID THERMAL EXPANSION VALVES

FIG. 43 - TYPICAL SUCTION FILTER - IN LINE TYPE

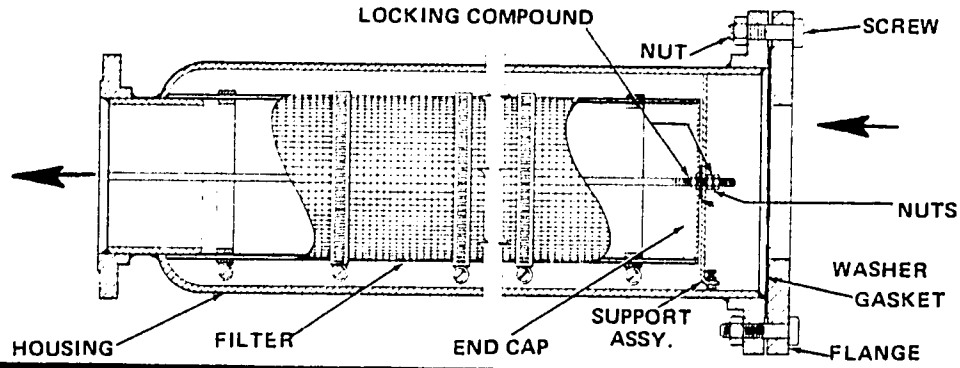

FIG. 44 - TYPICAL SUCTION FILTER - CHILLER HEAD TYPE

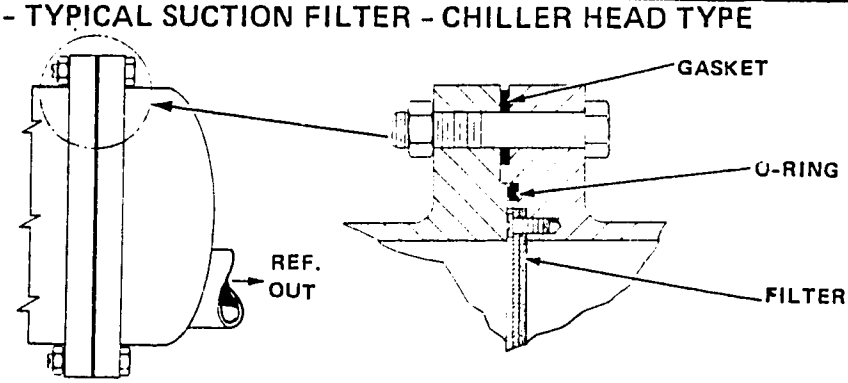

4h. Suction Filter

The suction filter should normally be inspected, cleaned or the element replaced only when a major overhaul is performed. Direct expansion type chiller units have the filter assembly located in the suction side of the chiller head. Flooded type chiller units have the filter located in the suction line near the compressor.

SP-33 *(Suction Filter Maintenance-In-Line Type)*

1. Transfer refrigerant to the condenser or remove the charge completely. (Refer to SP-7 thru SP-12) Isolate suction line and insure this portion of the system is at atmospheric pressure.

2. Remove insulation over suction filter.

3. Remove flange bolts, lift and remove housing weldment from piping. Remove old gaskets.

4. Remove support assembly and filter element and replace element.

NOTE: A locking compound has been applied on the nuts, when re-installing, be sure the compound is suitable for the refrigerant used and compatible with the refrigerant oil.

5. Position filter over support pipe. Install nut on center rod and push against end of filter.

NOTE: Adjusting screw on support assembly may be loosened for clearance.

6. Install second nut on center rod. Push support assembly hard against filter to crush overhanging media. Tighten outer nut against support assembly to secure it in place against filter core. Apply locking compound, then turn inner nut outward until it contacts inside surface of support assembly. Inner nut should now be in correct position.

7. Remove outer nut and support assembly. Install end cap, and position over filter. Install washers, support assembly and apply locking compound. Install outer two nuts. Tighten nut to clamp parts in place.

8. Adjust screw on support assembly to prevent end movement of filter. Apply locking compound to jam nut (on housing weldment) then tighten.

9. Re-install into piping using new gaskets, and torque bolts evenly. Epoxy insulation over housing weldment. Add refrigerant as required and test for any refrigerant leakage. (Refer to SP-15)

SP-34 *(Suction Filter Maintenance-Head Type)*

1. Transfer refrigerant to the condenser or remove the charge completely. Isolate the chiller and insure chiller is at atmospheric pressure (Refer to SP-7 thru SP-12).

2. Remove insulation at chiller suction head and suction flange. Remove flange bolts at chiller head and suction piping flange.

3. Remove chiller head and pipe assembly, head flange O-Ring and suction pipe flange gasket.

4. Disassemble filter element and inspect. Clean filter element with R-11 or replace if necessary.

5. Reassemble filter element to head with felt facing chiller.

6. Install chiller head assembly using new flange gaskets and head O-Ring.

7. Add refrigerant as required and test for any refrigerant leakage.

G. OPTIONAL SUBSYSTEM MAINTENANCE

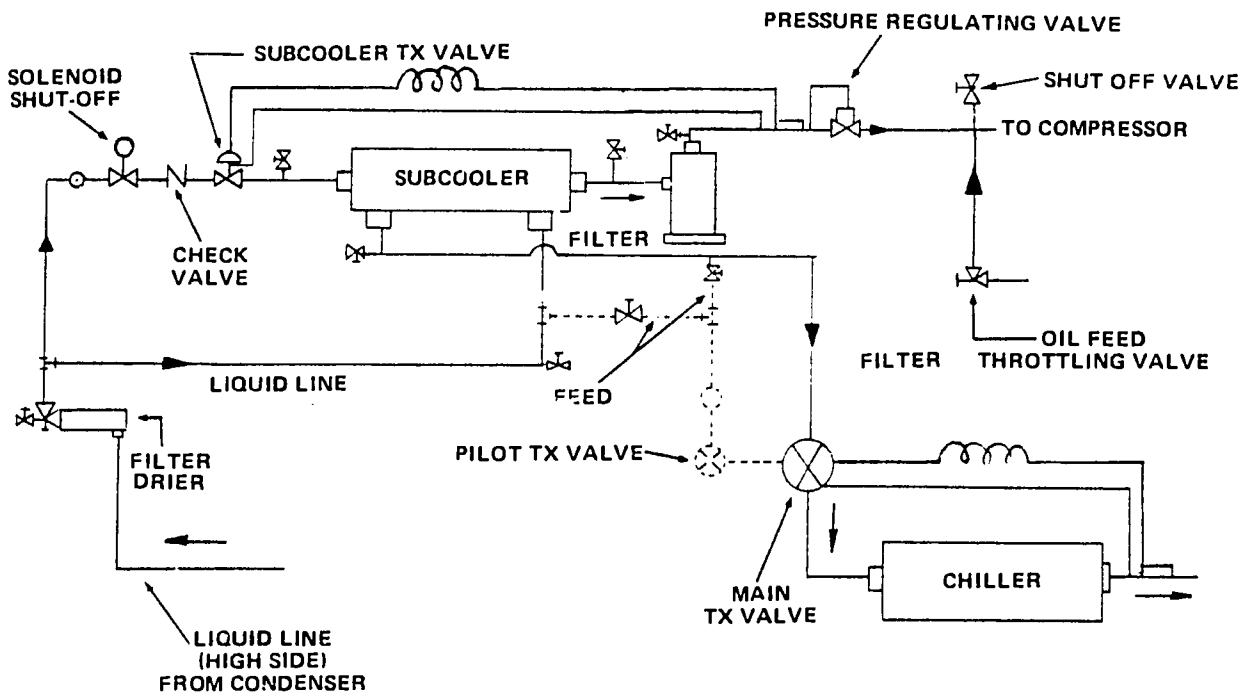

FIG. 45 TYPICAL VAPOR INJECTION SUBSYSTEM SCHEMATIC

1. VAPOR INJECTION

NOTE: It is necessary to have a load available that is sufficient to run the machine at full load at design conditions for the proper adjustment of the vapor injection system.

- **Adjustments**

- **Subcooler TX Valve** - Adjust superheat to 8°F to 12°F (4.4°C to 6.7°C) as measured at the subcooler outlet.

- **Evaporator Pressure Regulator** - Adjustment must be set at 10% below design conditions.

- **Feed Lines to Pilot TX Valve** - Use the warm liquid normally unless job conditions are such that unit operation is improved using cold liquid.

- **Oil Feed Valve** - Close valve until noise level increases; then back off 90° rotation.

- **Vapor Injection Shut-Off** - Normally set 65% slide valve travel to open solenoid. It can be adjusted from 40% to 75% to suit job conditions.

2. HOT GAS BYPASS (UNLOADED START)

The only periodic maintenance required on the unloaded start gas bypass is to insure the solenoid valve is operational and the timer maintains a 10 second timing period. The voltage supplied to the solenoid must not exceed ± 10% of the rated nameplate voltage. If the valve sticks or chatters, it should be disassembled and cleaned or replaced if required.

3. HOT GAS BYPASS (CAPACITY CONTROL)

The capacity control hot gas bypass requires a throttling valve adjustment upon installation and may require periodic readjustment. The throttling valve (located on the hot gas bypass line) should be adjusted at design percent slide valve activation as noted on the unit wiring diagram. The voltage supplied to the solenoid must not exceed ± 10% of the rated nameplate voltage. If the valve sticks or chatters, it whould be disassembled and cleaned or replaced if required.

SP-35 *(Hot Gas Bypass Adjustment)*

1. Position slide valve at design percent slide valve activation by manipulating the load to the chiller.

NOTE: Do not position slide valve by means of the temperature load controller. This will not reflect an accurate valve adjustment.

2. Monitor the temperature of the leaving chilled water or brine. if the temperature approaches the corresponding low pressure cut-out, open the throttling valve to avoid shut-down of the unit.

3. Rotating valve in the clockwise direction will lower leaving brine temperature, and may cycle off the unit. Rotating valve in the counter clockwise direction may load the compressor or may cycle the hot gas bypass solenoid on and off. Neither of these extremes are desirable. Adjust valve between these actions.

H. TYPICAL SYSTEM TESTS

MOTOR WINDING
1. INSULATION RESISTANCE TEST

This test is a measure of the dielectric resistance of the insulation to determine the condition of the motor. A D.C. voltage, greater than the operating voltage, is applied to the motor lead using a megohmmeter (megger). The resistance between ground and the motor lead is measured on the megger to determine the quality of insulation between the motor winding and ground. The megger is also used to determine the quality of insulation between the individual windings.

NOTE: Motor housing heaters must be activated a minimum of 24 hours to insure that the stator windings are at least 20°F (11°C) higher than the saturation temperature of the refrigerant vapor. The stator temperature is determined as specified in *SP-36*. A normal refrigerant charge in the unit is required.

CAUTION: As high voltages are used, extreme caution must be emphasized while conducting this test. All personnel in the area must be warned of the test being performed. All external power must be disconnected from the unit and safety gloves must be worn.

SP-36 *(Motor Insulation Resistance Test)*

1. Be sure that the main power source is disconnected from the unit.

2. Disconnect the motor terminal leads and the motor protector leads from their respective terminals on the compressor motor or oil pump motor.

3. Discharge any residual charges which may exist by grounding out each motor terminal.

4. Check the refrigerant pressure in the housing and with the proper refrigerant pressure temperature chart, convert the pressure to saturated temperature.

5. With an ohmmeter determine the resistance of each temperature sensor. With the table below convert this resistance to temperature. If this temperature does not exceed the saturated refrigerant temperature by at least 20°F (11°C) the housing heaters should be turned on for another 24 hours.

6. Phase to ground test - Connect the megger to terminal 1 and ground. Take a reading and record. Continue until readings of all terminals are taken and recorded.

7. Phase to phase test - Connect megger as shown in Figure 46 to isolate terminal 1. Take reading and record. Continue until all phases, as shown in Figure 46, have been isolated and their readings taken and recorded.

8. With the table below determine the minimum meg ohm values for the corresponding housing temperature. If the readings are below the minimum values, turn the housing heaters on for an additional 24 hours then repeat steps 5 through 7. If readings remain below minimum, contact National Service, Dunham-Bush, West Hartford, CT.

If readings are above the minimum, the power lead terminals may be connected and tightened in accordance with the label found in the cover of the terminal box.

9. Start the motor. After 8 or 10 hours of operation repeat this service procedure. If readings fall below the minimum values **DO NOT START MOTOR** *- Contact National Service, Dunham-Bush, West Hartford, CT.*

FIG. 46 PHASE TO PHASE TEST

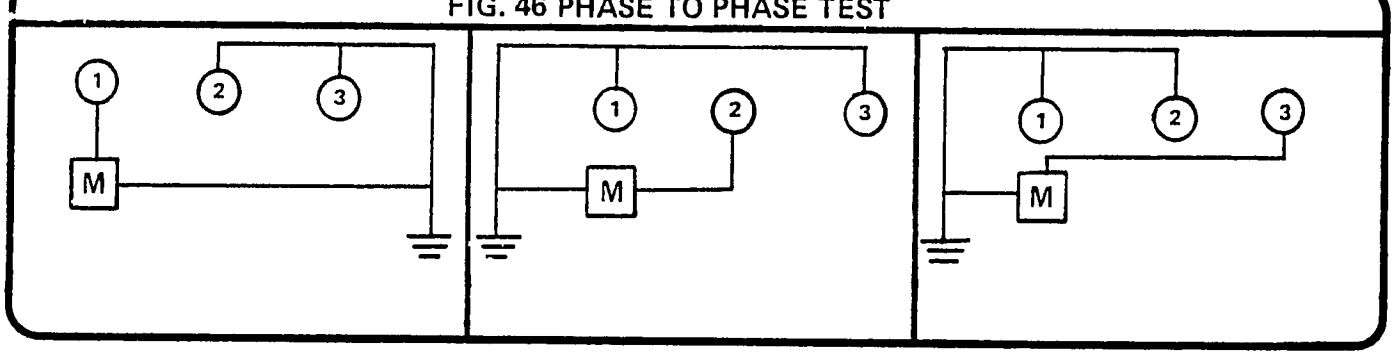

MINIMUM MEGGER VALUES

TEMP. SENSOR TERMINAL	CORRESPONDING TEMPERATURE		MINIMUM MEGGER READING	TEMP. SENSOR TERMINAL	CORRESPONDING TEMPERATURE		MINIMUM MEGGER READING	TEMP. SENSOR TERMINAL	CORRESPONDING TEMPERATURE		MINIMUM MEGGER READING	TEMP. SENSOR TERMINAL	CORRESPONDING TEMPERATURE		MINIMUM MEGGER READING	TEMP. SENSOR TERMINAL	CORRESPONDING TEMPERATURE		MINIMUM MEGGER READING
(OHMS)	(°F)	(°C)	(MEG OHMS)	(OHMS)	(°F)	(°C)	(MEG OHMS)	(OHMS)	(°F)	(°C)	(MEG OHMS)	(OHMS)	(°F)	(°C)	(MEG OHMS)	(OHMS)	(°F)	(°C)	(MEG OHMS)
68	40.0	4.4	215	78	90.1	32.3	60	98	139.5	59.7	5	98	187.4	86.3	5	108	233.3	111.8	5
69	45.0	7.2	185	79	95.1	35.1	50	89	144.4	62.4	5	99	192.1	88.9	5	109	237.8	114.3	5
70	50.0	10.0	165	80	100.1	37.8	40	90	149.2	65.1	5	100	196.3	91.3	5	110	240.7	115.9	5
71	55.0	12.8	135	81	105.1	40.6	35	91	154.1	67.8	5	101	201.4	94.1	5	111	242.3	116.8	5
72	60.0	15.6	125	82	110.0	43.3	30	91	158.9	70.5	5	102	206.0	96.7	5	112	251.1	121.7	5
73	65.0	18.3	115	83	115.0	46.1	25	93	163.7	73.2	5	103	210.6	99.2	5	113	255.5	124.2	5
74	70.0	21.1	90	84	119.9	48.8	20	94	168.5	75.8	5	104	215.2	102.0	5	114	259.8	126.6	5
75	75.0	23.9	85	85	124.8	51.6	15	95	173.2	78.4	5	105	219.8	104.3	5	115	264.1	128.9	5
76	80.0	26.7	75	86	129.8	54.3	10	96	178.0	81.1	5	106	224.3	106.8	5	116	268.9	131.3	5
77	85.0	29.4	65	87	134.7	57.1	10	97	182.7	83.7	5	107	228.8	109.3	5	117	272.7	133.7	5

H. TYPICAL SYSTEM TESTS CONTINUED

2. REFRIGERANT LEAK TEST

Pressure leak testing may be performed on either a component of the refrigerant system, or on the entire system.

CAUTION: All gages must be valved off to avoid damage under high test pressure.

SP-37 *(Refrigerant Leak Test)*

1. *Complete System (Remove refrigerant charge and have sample tested for quality.*
   a. *Open all line valves and manually unseat the expansion valves.*
   b. *Add 25 psig of refrigerant R22. Back this up with dry nitrogen bringing the pressure up in steps to 90% of the relief valve setting for the chiller.*
   c. *Isolate the vessel (King Valve)*
   d. *Bring up the pressure in the remainder of the unit to 90% of relief valve setting for the condenser.*
   e. *Check all vessels, valves and joints with an electronic leak detector, or halide torch. If leaks are found, isolate them and make repairs.*
2. *Partial System*
   When the charge is pumped into the condenser a low side pressure leak check can be made using refrigerant R-22.

CAUTION: If nitrogen is used the low side test pressure must be kept 20 psig below the condenser pressure to prevent nitrogen from contaminating the charge.

   a. *Open all refrigerant valves on the low side and unseat the expansion valves.*
   b. *Check all vessels, valves and joints with an electronic leak detector or halide torch. If leaks are found, isolate them and make repairs.*

3. CHECKING PHASING OF MOTORS FOR PROPER DIRECTION OF ROTATION

a. Start-up unit in normal manner.

b. When the compressor starts to accellerate, immediately check the suction pressure gage. If the pressure is dropping, the compressor is wired correctly and turning in the proper direction. If the suction pressure is rising, the motor is wired incorrectly and the control circuit breaker should be turned off immediately. Operation of the compressor in the wrong direction at full speed can damage the compressor and system.

4. TYPICAL CONTROL OPERATION TESTS

WARNING: The factory is not responsible for damage to any component of the unit as a result of mis-calibration and or testing of safety and operational controls.

NOTE: No deviations in system wiring from that shown on schematics furnished shall be made without prior written approval of Dunham-Bush, Inc.

CAUTION: The following procedures require that all control settings, valves and other devices and adjustments on the unit be at normal settings, or conditions, at the start of each procedure except as specifically stated. At the completion of each procedure, restore all normal conditions to the unit before starting the next procedure.

Compressor starts limited to 3 starts per hour.

The purpose of tripping the safety controls is to insure proper operation and calibration to prevent a system failure. The tests may also be used to troubleshoot a suspected control defect. **Consult the wiring diagram for design settings. The following procedures are of a typical unit. Consult the wiring diagram to verify sequence of events.**

Equipment: Test lamp, ohm or multi-meter, thermometer, thermocouple tester, stop watch, resistance decade box, test gages.

4a. Safety Controls (Test)

(IPS) High /Low Suction Pressure Switch (Low Pressure Function)

With the unit operating normally unload the compressor to a minimum load by means of the manual knob on the temperature load controller. Gradually close the drier service valve (high side) and insure the safety switch light illuminates while the unit shuts down at the design low pressure cut-out.

(IPS) High Low Suction Pressure Switch (High Pressure Function)

With the unit operating normally, position the slide valve in the 10% to 30% range by means of the manual knob on the temperature load controller. Slowly throttle a shut-off valve in the condenser field piping. Observe that the safety switch light illuminates while the unit shuts down at the specified high pressure cut-out.

CAUTION: Do not exceed the design high pressure cutout setting or 90% of the pressure setting of the high side relief valve.

Manually reset the high discharge pressure switch.

(7TAS) Low Refrigerant Temperature (Flooded Chiller)

With the control power off, place a continuity tester in parallel with the control. Remove the bulb of 7TAS from its well and immerse in an ice bath. Monitor the temperature of the ice bath. Adjust the setting of the control and observe if the control switches position at the temperature of the ice bath. If the control is not faulty readjust to its proper setting.

(1TAS) Compressor Motor Thermal Protector (Hermetic Models Only)

Disconnect compressor start control circuit to prevent compressor from starting. Disconnect line voltage at oil pump motor starter (or circuit breaker) to prevent oil pump operation during test. Disconnect and insulate wire from one motor sensor. Connect a resistance decade box set at 75 ohms to bypass the sensor. Reset the safety device located on this circuit. Activate control circuit voltage. Raise the resistance in 1 ohm increments to 110 ohms. At this point, raise the resistance in 0.1 ohms increments. Continue until the safety switch light illuminates. The resistance at this point should be 115.4 ± .80 ohms.

(12TAS) High Oil Temperature Control (Direct Drive)

With control power off, remove the power element bulb from the well and immerse in water bath. Raise

H. TYPICAL SYSTEM TESTS CONTINUED

and lower temperature of water bath to determine cut-in, cut-out, setting. Adjust accordingly to design temperature.

(13TAS) Seal Oil Temperature Safety (Direct Drive)

With control power off, disconnect the control. Connect a continuity tester to the terminals of the control and immerse the bulb into a water bath of 130°F (54.5°C). The control should trip at 130°F ± 5°F (54.5°C ± 2.8°C). Make adjustments as necessary.

(2TAS) Freezestat

Monitor the temperature of the leaving water or brine With control power off disconnect the freezestat from the control circuit. Connect a continuity tester to the terminals of the control. Raise the setting of this control to the temperature of the leaving water or brine. If the temperature is the same the control is in calibration and can be reset and reconnected into the circuit. If the temperature setting does not agree the control is faulty.

(FLS) Flow Switch

With the unit off, disconnect the electrical power to the chilled water pump. Attempt to start the unit. The safety light should illuminate while the unit does not start. Connect electrical power to pump and start chiller pump. Throttle water flow to chiller while monitoring pressure drop. Continue throttling until flow switch trips. Record ΔP across chiller. Flow switch should trip at approximately 25% of design pressure drop which will be approximately 50% of the design flow.

(1TR) Anti-Short Cycle Timer

Start the unit and observe that the anti-short cycle timer period light illuminates simultaneously with the start-up delay light. Observe that the anti-short cycle timer period light extinguishes 20 minutes after the start-up delay light is extinguished. The unit must operate continuously during this period to observe this action. This procedure will de-energize the anti-short cycle timer coil without stopping the unit, or attempting to restart, during the 20 minute time lapse.

4b. Automatic and Operating Controls (Test)

(3TR) Oil Pump Shut Down Time Delay Relay

With the unit off, pull the circuit breaker supplying electrical service to the oil pump motor. Attempt to start unit in normal manner. The oil pump starter will pull in. Observe that the oil pressure failure light is illuminated and that the oil pump starter drops out 60 seconds later.

(2TR) Oil Pressure Failure Time Delay

Connect a test lamp in parallel with the oil failure time delay coil. With the unit operating normally, gradually close the oil filter shut off valve(s) to slightly below pressure switch cut out pressure (high side of filter). Observe that the oil failure light illuminates and unit shutdown occurs 20 seconds later. If the unit has not shut down after 24 seconds, stop the machine manually and replace the timer.

(4TR) Start-Up Time Delay

Connect a test lamp to terminals on each side of the start-up time delay coil. Start the unit in the normal manner, and observe that the compressor starts after 60 seconds with continuous electrical power to the start-up time delay coil.

(2PS) Low Suction Pressure Unload Control

With the unit operating normally unload the compressor to minimum load by means of the manual knob on the temperature load controller. Gradually close the drier service valve (high side) and observe if the (fast) unload solenoid energizes when the suction pressure drops to design cut-in. Gradually open the filter drier service valve, and observe the (fast) unload solenoid de-energizes when the suction pressure rises to design cut-out. The differential on this control is fixed when used on std. heat reclaim units.

(3PS) Differential Oil Pressure

Connect a test lamp to terminals on each side of the oil failure time delay coil. With the unit operating normally, gradually close the oil filter shut-off valve(s) (high side of filter). Insure that the oil failure time delay coil energizes, when the oil refrigerant discharge differential pressure gauge drops to the design cut-in pressure. Gradually open the oil filter valve(s) and insure that oil failure time delay coil is de-energized when the oil refrigerant discharge differential pressure rises to the design cut-out pressure.

> **CAUTION:** This procedure must be performed with sufficient speed so that the oil failure time delay coil is actually energized for less than 20 seconds to prevent unit shut-down.

(12TR) Seal Oil T'stat By-Pass Timer (Direct Drive)

Start unit when the compressor initially starts, commence timing with a stop watch. After four minutes elapse, observe the contacts open on the seal oil t'stat by-pass timer relay.

(8TAS) Liquid Injection Thermostat (If Equipped)

With all power removed from the unit, disconnect the wire leading from the liquid injection thermostat to the liquid injection solenoid, connect a continuity tester across the liquid injection thermostat terminals. Remove the liquid injection thermostat bulb from its bulbwell and submerge in water in a suitable container. Raise and lower the water temperature and observe that the thermostat contacts close and open within design settings.

(TLC) Temperature Load Controller

> **CAUTION:** Heat reclaim TLC require this test when in heat reclaim load.

- **Current Limiting Function** - connect an Amp Probe at the terminals of the motor starter, with the unit operating normally at approximately full load, slowly throttle the water service valve in the field piping of the condenser. Observe the slide valve unload when the compressor motor current reaches 1.06 x the motor nameplate rated load amps.

H. TYPICAL SYSTEM TESTS CONTINUED

- **Temperature Control Function** - with the unit operating normally, observe that the chilled water (brine) outlet is at design temperature, when the index mark on the temperature knob is vertical. Rotate the knob clockwise and observe the slide valve unload. Rotate the knob counterclockwise, and observe the slide valve load. Reset at design temperature, rotate the temperature adjusting knob slightly back and forth to determine that there is ½° to 1°F (.28°C to .56°C) difference between loading and unloading action. This is the dead band. Replace the TLC if the dead band exceeds 3°F (1.7°C) ΔT.

4c. Additional Controls For Heat Reclaim Units

(13PS) Head Pressure Controller and Control Shunt (STD Heat Reclaim)

With the control panel off, valve off and disconnect the discharge pressure line at the (13PS) control. Remove control cover to obtain access to adjusting screws. Attach a container of nitrogen to a pressure regulating valve, a calibrated gauge, a manual vent, and a shut-off valve. Secure the connecting hose to the (13 PS) control inlet. Raise the pressure to the control to 13 PS step one design cut-in. Step-one switch should trip at design pressure. To raise the trip point, rotate the screw clockwise. Vent pressure slowly and observe switch trip back to its original position. Failure to trip at design cut-out requires adjustment of the differential wheel. The differential (cut in minus cut-out = diff.) is increased by clockwise rotation of the wheel. Only the step-one switch has an adjustable differential.

CAUTION: Do not exceed the proof pressure rating on the nameplate or the design cut-in/cut-out pressures.

Repeat for 13 PS step two switch; raise pressure for design cut-out and reduce pressure for design cut-in, repeat for 13 PS step three switch; raise pressure for design cut-in, reduce pressure for design cut-out.

(7CR) Slide Valve Block To Prevent Unloading And Hot Gas By-Pass (Low Slide Valve Limit) STD-Heat Reclaim

NOTE: This control can only be checked while the unit is consistently operating in the heat reclaim mode throughout the test.

When the heat reclaim light (6 LT) illuminates manually unload the compressor by means of the temperature load controller (TLC) manual knob. Observe the slide valve indicator percent increments. The slide valve travel should stop at design low percent limitation while the hot gas by-pass solenoid is activated. For servicing the IDR assembly, consult compressor service manual 6136.

(10CR) Slide Valve Block To Prevent Loading (OPT)

NOTE: This control can only be checked when the unit is operating in the heat reclaim mode.

Immediately after the heat reclaim light illuminates, load the compressor by means of the temperature load controller (TLC) manual knob. Observe the slide valve indicator percent increments. The slide valve travel should stop at design high percent limitation.

CAUTION: The leaving brine temperature should be monitored and a load must be available to unit to prevent shutdown.

STD. = Standard **OPT** = Optional

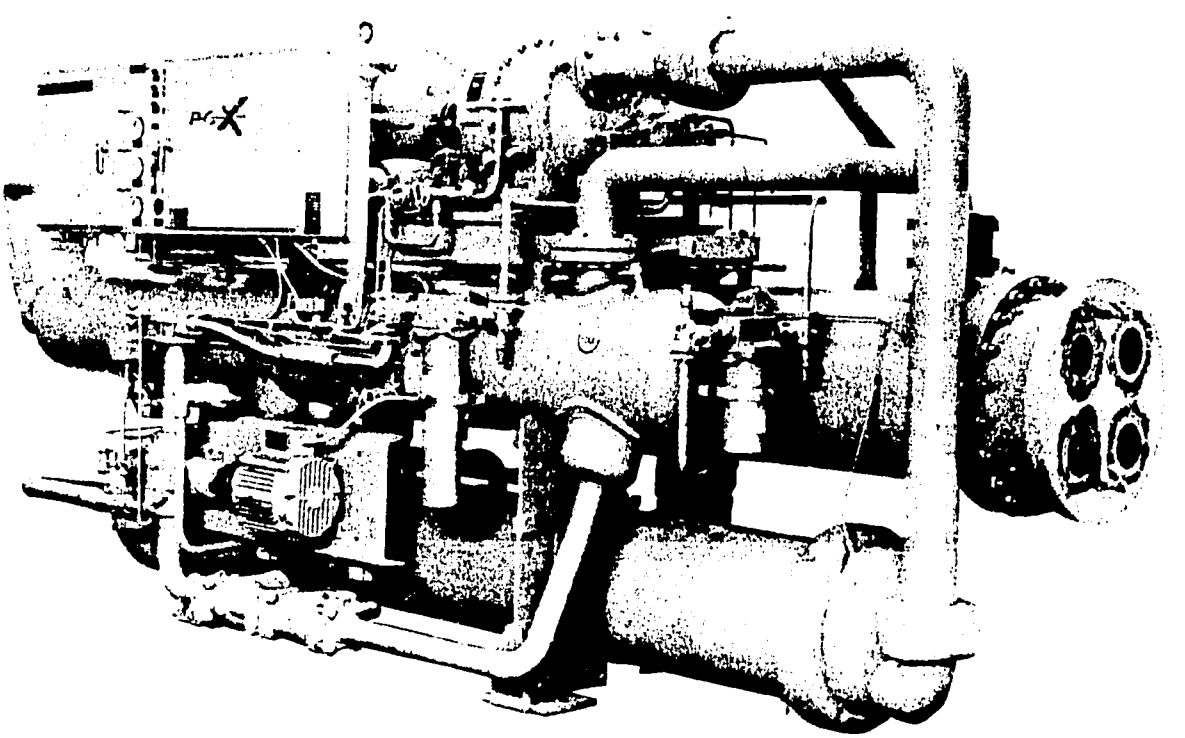

PCX-OHR - HEAT RECOVERY PACKAGED CHILLER

V. TROUBLE SHOOTING

A. GENERAL

Operating personnel must be completely familiar with the equipment and this manual. This will be necessary for correct diagnosis of any troubles and will permit immediate correction of minor difficulties. It is important that operators be able to quickly distinguish conditions requiring expert service in order to minimize down-time and maintenance expense. Comparison of the readings entered in the current Daily Log with those entered immediately following installation of the unit will be of considerable assistance in locating trouble areas.

To determine and isolate common problems which might occur, the following chart was made which lists symptoms, possible causes and remedies.

SYMPTOM	POSSIBLE CAUSE	REMEDY
A. Unit shuts down on compressor starter overload	1. Faulty compressor or motor 2. Overloads trip below 105% of full load amperage 3. Low voltage 4. Load limit relay out of adjustment	1. Contact Dunham-Bush Service Representative 2. Install properly sized overloads 3. Check line voltage. Must be ± 10% of rated voltage 4. Check and adjust for proper operation
B. Unit shuts down on oil pump starter overload	1. Cold oil 2. Low voltage 3. Bound Pump 4. Plugged oil filter 5. Faulty motor 6. Closed service valve	1. Check oil sump heaters for proper operation, repair and replace as necessary 2. Check line voltage must be ± 10% of rated voltage 3. Clean and repair as necessary 4. Clean and replace as necessary 5. Repair or replace as necessary 6. Open service valve
C. Unit shuts down on High-Low pressure switch	1. High Discharge Pressure a. Poor or no condensing water flow b. Condenser tubes fouled c. Refrigerant overcharge d. Air or noncondensables in refrigerant system e. Water supply to condenser is too warm f. Pressure switch out of calibration 2. Low Suction Pressure a. Plugged filter/drier b. Low refrigerant charge c. Low water flow thru chiller d. Fouled chiller e. Frozen chiller f. Pressure switch out of calibration g. Low condenser water temperature	1. a. Clean strainers, check setting of flow valve, check condenser pump - clean and repair as necessary b. Clean tubes, have water checked by water treatment specialist c. Remove excess refrigerant d. Purge air or non condensables e. Check, repair and adjust condenser water cooling facilities f. Reset or replace as necessary 2. a. Replace elements if pressure drop is above limits b. Check sight glass for flashing gas, check for leaks, repair leaks. Add refrigerant as necessary c. Check control valves for proper settings, check for dirty strainer, adjust clean and repair as necessary d. Clean chiller, consult water treatment specialist e. Check and reset or replace freeze-up switch as necessary, check brine for proper % solution f. Reset or replace as necessary g. Adjust condenser water regulating valve (if applicable). Check tower temperature controls
D. Shut down of unit on seal oil temp.	1. Low refrigerant charge 2. Inoperative TX valve 3. Inoperative seal oil cooler solenoid 4. Filter drier plugged	1. Check sight glass for flashing gas, check for leaks Repair leaks add refrigerant as necessary 2. Replace valve 3. Check coil for burnout 4. Clean or replace as necessary
E. Shut down on high oil temp.	Units with Liquid Injection: 1. Low refrigerant charge 2. Inoperative liquid injection TX valve 3. Inoperative liquid injection solenoid 4. Discharge temperature thermostats out of adjustment Units with Water Cooled Oil Cooler: 5. Oil cooler water valve out of adjustment 6. Inadequate water supply to oil cooler 7. Dirty oil cooler	1. Check sight glass for flashing gas, check for leaks, repair leaks and add refrigerant as necessary 2. Replace valve 3. Check coil for burnout 4. Reset to lower temperature 5. Readjust 6. Check condenser water pump and clean strainer 7. Check and clean tubes if necessary, check condenser water treatment installation
F. Unit shuts down on freezestat	1. Inadequate flow of chilled water 2. Malfunctioning freezestat 3. Incorrect TLC temperature setting	1. Check settings of valves, clean strainers, check chiller pump, clean and repair as necessary 2. Reset or replace as necessary 3. Readjust to desired leaving chilled water temperature
G. Unit shuts down on flow switch	1. Pump malfunctioning 2. Strainers plugged 3. Valves not set properly 4. Air in system 5. Flow switch inoperable	1. Check pump, clean and repair as necessary 2. Clean strainers 3. Reset valves 4. Bleed system 5. Replace

V. TROUBLE SHOOTING

A. GENERAL CONTINUED

SYMPTOM	POSSIBLE CAUSE	REMEDY
H. Unit shuts down on chilled water pump	1. Overload on pump	1. a. Pump malfunction, repair or replace as necessary b. Plugged strainer - clean c. Closed system valves, reset as necessary
J. Low discharge/oil temperature	1. Sump heaters not functioning during off period 2. Maladjusted expansion valves 3. Discharge temperature thermostat out of adjustment Water Cooled Oil Coolers 4. Oil cooler water valve out of adjustment 5. High water pressure	1. Repair and replace as necessary 2. Readjust superheat settings of main expansion valves, liquid injection and seal oil cooler expansion valves 3. Reset to lower temperature Water Cooled Oil Coolers 4. Readjust 5. Readjust water pressure regulator
K. High discharge/ oil temperature	1. Maladjusted expansion valve 2. Discharge temperature thermostat out of adjustment 3. Liquid injection solenoid valve malfunction Water Cooled Oil Coolers 4. Oil cooler water valve out of adjustment 5. Inadequate water supply to oil cooler 6. Dirty oil cooler	1. Readjust superheat settings of main expansion valves, liquid injection and seal oil cooler expansion valves 2. Reset to lower temperature 3. Check coil for burnout. Water Cooled Oil Coolers 4. Readjust 5. Check condenser water pump and clean strainer 6. Check and clean tubes
L. Unit periodically running low or losing oil	1. External oil leak 2. Low discharge superheat and or suction superheat 3. Units with jet pump not picking up oil - clogged lines or maladjusted valves 4. Discharge temperature thermostat out of adjustment 5. Liquid injection solenoid valve malfunction 6. Liquid injection TX valve malfunction	1. Check unit visually for leaks, repair as necessary 2. Readjust superheat as necessary 3. Repair or readjust as necessary 4 Reset to lower temperature 5. Repair or readjust as necessary 6. Repair or readjust as necessary
M. Shut down on low oil pressure	1. Oil filter plugged 2. Low oil pressure safety switch malfunction 3. Low discharge superheat and or suction superheat	1. Clean and replace as necessary 2. Repair or readjust as necessary 3. Readjust superheat as necessary

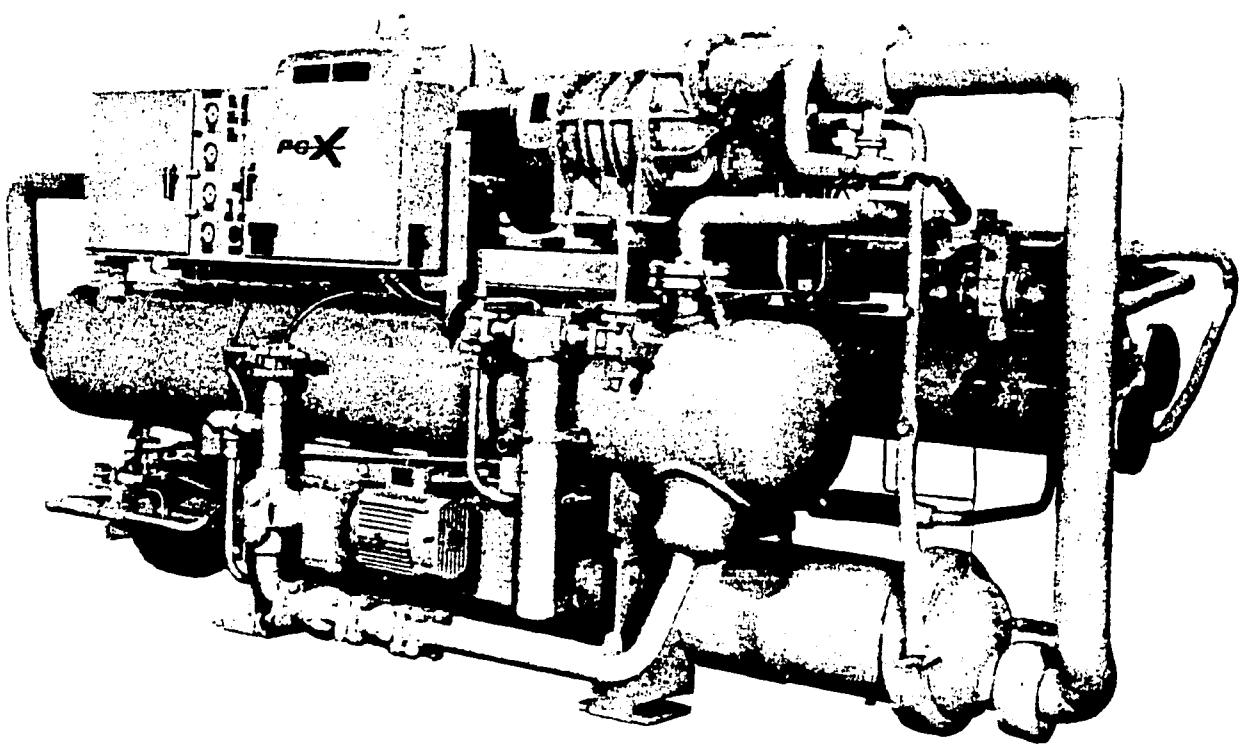

IPCX-O DIRECT DRIVE PACKAGED CHILLER

VI. APPENDIX

A. TYPICAL DAILY OPERATING LOG

FORM 9181A

DUNHAM-BUSH

DAILY OPERATING LOG
ROTARY SCREW COMPRESSOR PACKAGED CHILLER (PCX, IPCX)

UNIT MODEL _____ MONTH _____

UNIT SERIAL NUMBER _____ YEAR _____

		DATE		MONDAY	TUESDAY	WEDNESDAY	THURSDAY	FRIDAY	SATURDAY	SUNDAY
TIME		CHECK		☐AM ☐PM	☐AM ☐PM	☐AM ☐PM	☐AM ☐PM	☐AM ☐PM	☐AM ☐PM	☐AM ☐PM
ELAPSED TIME INDICATOR READING		HR								
SLIDE VALVE INDICATOR POSITION		%								
MOTOR CURRENT (COMPRESSOR)		AMPS								
MOTOR VOLTAGE (COMPRESSOR)		VOLTS								
REFRIGERANT SUCTION PRESSURE		PSIG	kPa							
REFRIGERANT SUCTION TEMPERATURE		°F	°C							
REFRIGERANT DISCHARGE PRESSURE		PSIG	kPa							
REFRIGERANT DISCHARGE TEMPERATURE		°F	°C							
NET OIL PRESSURE (GAGE MINUS DISCHARGE)		PSI	kPa							
SEAL DRAINAGE (DIRECT DRIVE ONLY)		CC/HR.								
SEAL OIL TEMPERATURE (DIRECT DRIVE ONLY)		°F	°C							
OIL TEMPERATURE ENTERING COMPRESSOR		°F	°C							
OIL SUMP SIGHT GLASS LEVEL		%								
WATER TEMPERATURES (CONDENSER)	ENTERING	°F	°C							
	LEAVING	°F	°C							
OUTSIDE AMBIENT AIR TEMPERATURE	WET BULB	°F	°C							
	DRY BULB	°F	°C							
REFRIGERANT INDICATORS		WET/DRY								
TRANSFER MEDIUM (BRINE, WATER) TEMPERATURES (CHILLER)	ENTERING	°F	°C							
	LEAVING	°F	°C							
CHILLED (AIR) MEDIUM (SYSTEM)	IN DRY BULB	°F	°C							
	IN WET BULB	°F	°C							
	OUT DRY BULB	°F	°C							
	OUT WET BULB	°F	°C							
RECORDED BY										

COMMENTS _____

FORM NO. 9181-1

DUNHAM-BUSH

MONTHLY OPERATING LOG
ROTARY SCREW COMPRESSOR PACKAGED CHILLER (PCX, IPCX)

UNIT MODEL _____ DATE _____

UNIT SERIAL NO. _____ RECORDED BY _____

☐ 1000 HOUR INTERVAL

LUBRICATION	OIL FILTER PRESSURE DROP		PSI	kPa	
	OIL PUMP MOTOR CURRENT		AMPS		
	OIL PUMP MOTOR VOLTAGE		VOLTS		
	OIL SUMP HEATER OPERATION		—		
	LOAD/UNLOAD SPEED (FULL STROKE)		MINUTES		
	OIL PUMP MOTOR STARTER AND RELAY CONTACTORS		—		
	SEAL OIL COOLER OPERATION (DIRECT DRIVE ONLY)		—		
	EVAPORATOR OIL RETURN VALVE (IF EQUIPPED)		—		
REFRIGERANT	COMPRESSOR MOTOR STARTER AND RELAY CONTACTORS		—		
	CONTROL AND GAGE CALIBRATION		—		
	REFRIGERANT LEAKAGE		—		
	FILTER DRIER PRESSURE DROP		PSI	kPa	
	LIQUID INJECTION OPERATION		—		
	DISCHARGE SUPERHEAT	DISCHARGE TEMP.	°F	°C	
		DISCHARGE PRESSURE	PSIG	kPa	
		SUPERHEAT	ΔF°	ΔC°	
	SUCTION SUPERHEAT	SUCTION TEMPERATURE	°F	°C	
		SUCTION PRESSURE	PSIG	kPa	
		SUPERHEAT	ΔF°	ΔC°	
HYDRONIC	CHILLER COOLING MEDIUM	FREEZE-POINT	°F	°C	
		PH (BRINE ONLY)	—		
	CONDENSER PRESSURE DROP (WATER SIDE)		PSI	kPa	
	CHILLER PRESSURE DROP (BRINE SIDE)		PSI	kPa	

COMMENTS _____

☐ 3000 HOUR INTERVAL

COMPRESSOR COUPLING ALIGNMENT (DIRECT DRIVE MODELS ONLY)		CM	INCH	
OIL PUMP COUPLING ALIGNMENT (DIRECT DRIVE OIL PUMP ONLY)		CM	INCH	
OIL ACIDITY (TOTAL ACID NUMBER)			TAN	
INSULATION RESISTANCE TEST	TEMP. SENSOR READINGS		OHM	
	MEG OHM READINGS		MEG OHM	

C. TYPICAL CONDENSER WATER PIPING

CONDENSER WATER PIPING

A relatively constant condensing temperature (compressor head pressure) should be maintained. The supply water temperature and flow rate must, therefore, be controlled to maintain this constant condensing temperature over the wide load and operating range of the packaged chiller. Valve manufacturers recommendations for piping should be followed.

If a cooling tower is supplying the condenser water, then some means to maintain a constant water supply temperature should be employed.

There are a number of different methods; e.g., cycling the tower fan off and on through a thermostat sensing the cooling tower sump water; temperature dampers controlling air flow (may also be used in conjunction with fan cycling) or by-passing all or part of the return water directly to the sump via a 3-way valve actuated by a controller sensing sump temperature.

The most stable compressor operation can be obtained with a water regulating valve modulating the water flow to the condenser, controlled by condensing pressure.

Heat reclaim units condense refrigerant at higher pressures while operating in the heat reclaim mode. However, this is justified by the amount of heating and cooling performed per kilowatt input. Controlling head pressures for heat reclaim units is highly specialized depending on the system application and is not included in this discussion.

The following are typical valving arrangements with suggested guidelines for the piping configurations. The cooling source is applicable to cooling towers, evaporative water coolers and natural sources.

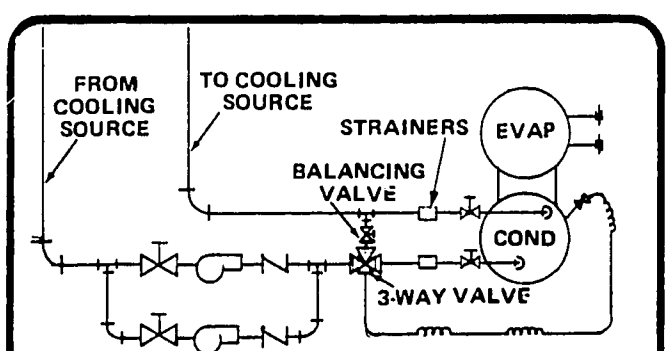

FIG. 47 TYPICAL DIVERSION OF ENTERING CONDENSER WATER

1. **Typical Diversion of Entering Condenser Water with Three-Way Valve.(Fig. 47)**

   Stable packaged chiller operation can be obtained by diverting a percentage of the entering water to bypass the condenser as a function of condensing pressure.

   With a diverting system, entering condenser water is regulated by a three-way valve sensing refrigerant condensing pressure. The water valve therefore maintains constant refrigerant head pressure in the condenser.

   - **Oil Cooler Piping** - Units that are equipped with a water cooled oil cooler have a two-way water regulating valve.(Fig. 48)

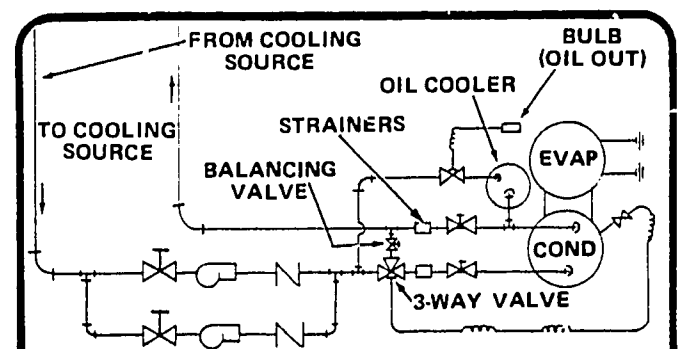

FIG. 48 TYPICAL DIVERSION OF ENTERING CONDENSER WATER WITH OIL COOLER

   With this configuration, the piping must be designed to have an uninterrupted water supply flow to the oil cooler. The supply to the oil cooler must be located upstream of the condenser water regulating valve.

2. **Cool Weather Package Operation**

   Any application of condenser water regulating valves with an anticipated entering water temperature of below 50°F (10°C) requires additional considerations. A minimum condensing pressure must be maintained to insure proper operation of the thermal expansion valves. If entering condenser water is not effectively regulated, proper operation of the packaged chiller may be jeopardized. Consult factory for parameters concerning your application.

3. **Cold Weather Operation (Cooling Towers)**

   If a system is to be operated in a cold climate [below 32°F (0°C)] some provision must be made to keep the cooling tower from freezing. Sump heaters or an indoor sump are two examples of how this can be accomplished. Consult the tower manufacturer for recommendations.

VI. APPENDIX

D. COMPRESSOR LUBRICATION REQUIREMENTS

The purpose of this chart is to define the type of oil used with large screw compressors (163, 204, 255mm) for various fluorocarbon applications.

TYPE OF OIL

TEMPERATURE		REFRIGERANT		
EVAPORATOR	CONDENSING	R-502 R-22	R-12	R-500
Above 20°F	Below 135°F	Oil 4	Oil 4	Oil 4
Above 20°F	Above 135°F	NA	Oil 14	Oil 14
Below 20°F	All	Oil 3	Oil 3	NA

This chart is used to define the oil pressure and oil failure switch settings for various applications.

REQUIRED OIL PRESSURE

TYPE SYSTEM	MINIMUM OIL FAILURE CUT-OUT SETTING (PSID)		FULL LOAD OIL PRESSURE (PSID)	
	BELOW 20° ET	ABOVE 20° ET	BELOW 20° ET	ABOVE 20° ET
PCX	20	20	40	40
IPCX	20	20	40	40
Heat Recovery	35	35	65	65

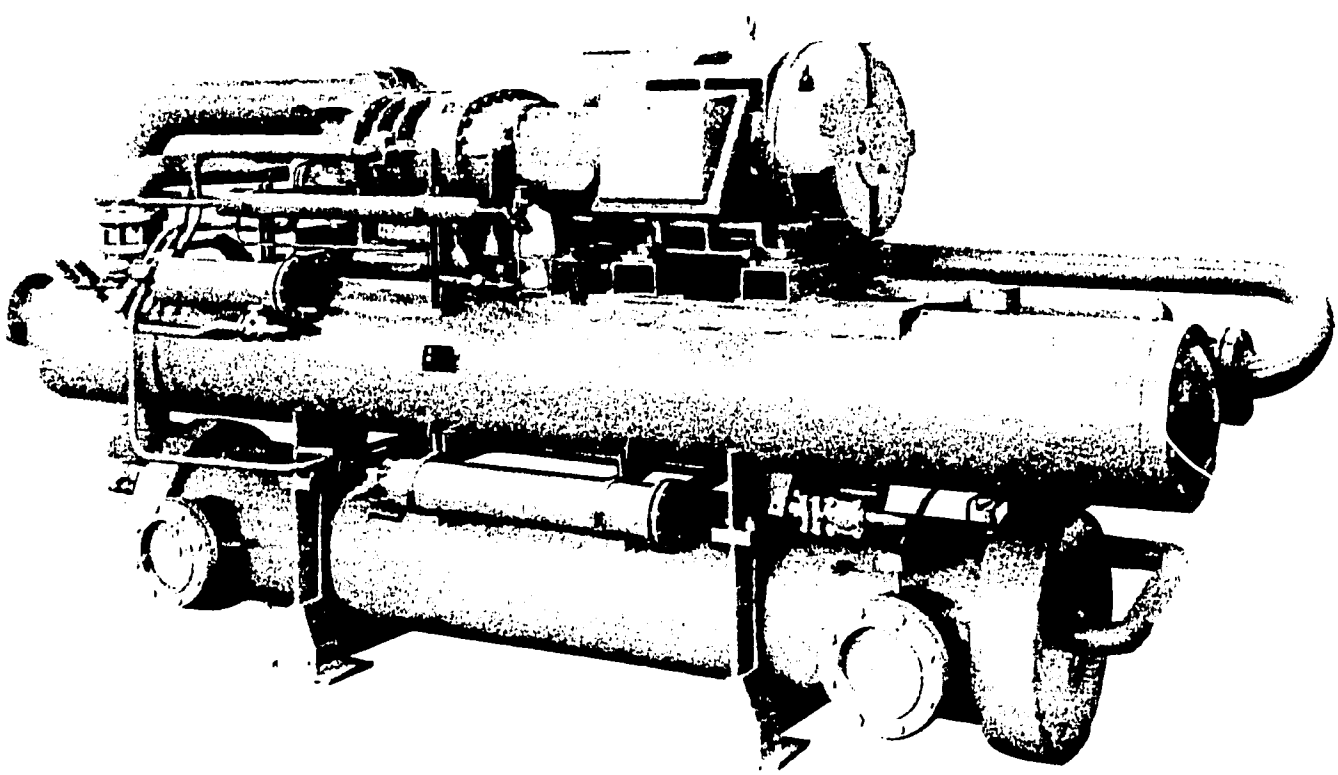

PCX-O DIRECT DRIVE PACKAGED CHILLER

E. TYPICAL INFORMATION TAGS AND LABELS

CAUTION

ALL ELECTRICAL CONNECTIONS MUST BE RETIGHTENED PRIOR TO STARTING THIS EQUIPMENT.
LOOSE CONNECTIONS CAN CAUSE DAMAGE TO THE WIRE, CONTROLS, MOTORS & ALSO CREATE A FIRE HAZARD.

TAG 56

USE
R22
ONLY

A-TAG 1-1
DISCHARGE
WARNING
OPEN THIS VALVE
BEFORE STARTING
DUNHAM-BUSH, INC.
COMPRESSOR DIVISION
WEST HARTFORD, CONN., U.S.A.

CHECK CONTROLS SETTINGS
BEFORE START-UP OF UNIT

CAUTION
'HAZARD OF ELECTRICAL SHOCK'
MORE THAN ONE DISCONNECT SWITCH MAY BE REQUIRED TO DE-ENERGIZE THE EQUIPMENT FOR SERVICING.
PLT2089

MOTOR TEMPERATURE SENSORS
USE ONLY THREE SENSORS-ONE IN EACH MOTOR PHASE
SENSORS 1 & 4 IN PHASE 1
SENSORS 2 & 5 IN PHASE 2
SENSORS 3 & 6 IN PHASE 3
COMBINATIONS OF SENSORS FROM BOTH SENSOR SETS CAN BE CONNECTED TO THE SAME MODULE; HOWEVER, TO DO SO THE COMMON TERMINALS OF BOTH SETS MUST BE CONNECTED TOGETHER.
AB-DCM 53

WARNING

DO NOT FORK LIFT FROM THIS END

A476029-001

CAUTION

PRIOR TO STARTING MOTOR:
STEP 1: MOTOR HOUSING HEATERS MUST BE ENERGIZED FOR 24 HOURS.
STEP 2: THE MOTOR TEMPERATURE RISE MUST BE AT LEAST 20°F ABOVE AMBIENT.
STEP 3: THE MOTOR MEGOHM READING MUST BE AT LEAST 50 MEGOHMS.
IT MAY BE NECESSARY TO LEAVE HEATERS ON LONGER THAN 24 HOURS TO ACHIEVE 20°F TEMP. RISE & 50 MEGOHMS IN SOME CASES.
STK36

TESTING OF MOTOR TEMPERATURE SENSORS

TO PREVENT PERMANENT DAMAGE TO THE MOTOR SENSORS, DO NOT CHECK THE SENSOR RESISTANCE WITH ANY INSTRUMENT POWERED BY A SOURCE GREATER THAN 6 VOLTS

AG 69-1

E. TYPICAL INFORMATION TAGS AND LABELS

OIL PUMP MOTOR POWER SUPPLY WIRING

THE POWER SUPPLY TO OPERATE THE OIL PUMP MOTOR IS FURNISHED AND WIRED BY THE CUSTOMER.

THE SUPPLY IS CONNECTED TO TERMINALS L1, L2, AND L3 OF THE OIL PUMP MOTOR CONTACTOR OR STARTER LOCATED IN THE CONTROL PANEL.

TAG 68

CAUTION

PRIOR TO STARTING THIS UNIT PHASE SEQUENCE MUST BE CHECKED TO AGREE WITH THE CONNECTIONS OF THE OIL PUMP & COMPRESSOR MOTORS TO INSURE PROPER DIRECTIONAL ROTATION. SEE INSTRUCTION MANUAL FOR VISUAL METHOD OF DETERMINING ROTATION WITH THE USE OF THE SYSTEM GAGES

TAG 61-1

RELIEF VALVE VENTING INFORMATION

CAUTION

1. FLEXIBLE CONNECTIONS MUST BE USED BETWEEN RELIEF VALVE AND EXTERNAL PIPING AND PIPING MUST BE SUPPORTED TO PREVENT STRAIN FROM BEING TRANSMITTED TO THE RELIEF VALVE ASSEMBLY.
2. WHEN TIGHTENING THE VENT CONNECTIONS TO THE RELIEF VALVE, HOLD THE UPPER HEX PORTION OF THE RELIEF VALVE WITH A WRENCH TO PREVENT IT FROM TURNING. THIS WILL PREVENT GASKET DAMAGE AND POSSIBLE LEAKES. DO NOT OVER TIGHTEN THE CONNECTIONS TO THE RELIEF VALVES.

P/N 050126A1

WARNING

THIS MOTOR LIMITED TO THREE STARTS PER HOUR.

RESTARTING MORE OFTEN WILL DAMAGE MOTOR.

DO NOT BYPASS OR ADVANCE ANTI RECYCLE TIMER.

WARNING

ATTENTION: SPECIAL FILTER ASSEMBLY INSTRUCTIONS P/N: 050018A1

(1) THE ELEMENTS IN THIS SCHROEDER FILTER REQUIRE NEOPRENE GASKETS FOR FREON REFRIGERANTS
(2) STANDARD SCHROEDER ELEMENTS SUCH AS THOSE OBTAINED FROM LOCAL SOURCES, HAVE BUNA N GASKETS THESE GASKETS CANNOT BE USED WITH FREON REFRIGERANTS AND MUST BE DISCARDED
(3) FILTER ELEMENTS WITH NEOPRENE GASKETS ARE D/B PART NO FLR125 AND ARE MARKED G603
(4) MOLDED NEOPRENE GASKETS ARE D/B PART NO GKT543 AND ARE IDENTIFIED WITH A BLUE MARK
(5) FLAT NEOPRENE GKT523 OR MOLDED NEOPRENE GASKETS GKT543 CAN BE REUSED IF NECESSARY IT IS RECOMMENDED THAT SPARE FLR125 SETS BE ORDERED TO BE AVAILABLE WHEN REQUIRED

WARNING

MOST WATER SUPPLIES CONTAIN DISSOLVED OR SUSPENDED MATERIALS WHICH CAUSE SCALE FORMATION, CORROSION AND PROPOGATE SLIME, ALGAE, ETC. IN ORDER TO PREVENT EXCESSIVE MAINTENANCE COSTS DUE TO SCALE FORMATION AND POSSIBLE TUBE FAILURE

IT IS ESSENTIAL

THAT BOTH CONDENSER WATER AND CHILLER SYSTEM WATER BE ANALYZED BY A QUALIFIED WATER TREATMENT COMPANY.

AND THEIR RECOMMENDATION FOR PROPER CONDENSER AND CHILLED WATER TREATMENT BE FOLLOWED

ANY FAILURE DUE TO IMPROPER AND/OR LACK OF WATER TREATMENT

WILL VOID THE WARRANTY.

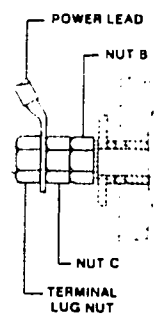

POWER LEAD TERMINAL TIGHTENING PROCEDURE

1. NUT C TO BE JAMMED AGAINST NUT B WHILE HOLDING NUT B.
2. INSTALL POWER LEAD TERMINAL ON STUD AND TORQUE TERMINAL LUG NUT TO VALUE IN TABLE BELOW WHILE HOLDING NUT C.
3. MAKE SURE THAT TERMINAL STUD DOES NOT TURN WHILE TORQUING TERMINAL LUG NUT.

TERMINAL TORQUING SPEC

COMP. MODEL	TERMINAL LUG NUTS
102	3 LB. FT.
127	15 LB. FT.
163, 204	20 LB. FT.
255	30 LB. FT.

DCM 68

KEEP VALVES CLOSED EXCEPT WHEN READING GAUGES

CAUTION

IMPORTANT APPLICATION MOTOR INFORMATION PLT 2224

1. THE OVERLOADS PROTECTING THIS MOTOR MUST BE SET TO TRIP AT OR BELOW THE MAXIMUM CONTINUOUS CURRENT (AMPERE) RATING STAMPED HERE [ ]
2. THE STARTER AND OVERLOADS MUST CONFORM TO DUNHAM-BUSH SPECIFICATION ES-ELC-9.
3. NO CONTROLS, MANUAL OR AUTOMATIC, WHICH WILL START OR STOP THE MOTOR INDEPENDENTLY OF THE UNIT CONTROL CIRCUIT AND/OR BYPASS THE ANTI-RECYCLE TIMER ARE ALLOWED
4. MAXIMUM VOLTAGE UNBALANCE ALLOWED AT THE COMPRESSOR MOTOR TERMINALS IS 1%.
5. MAXIMUM VOLTAGE TOLERANCE IS ±10% OF STAMPED COMPRESSOR NAMEPLATE VOLTAGE MEASURED AT THE COMPRESSOR MOTOR TERMINALS.
6. FAILURE TO ADHERE TO THE ABOVE WILL VOID THE WARRANTY

DUNHAM-BUSH

AIR CONDITIONING, REFRIGERATION, HEATING PRODUCTS AND ACCESSORIES

MAIN OFFICES

175 SOUTH STREET WEST HARTFORD, CONNECTICUT 06110

FACTORIES

WEST HARTFORD DIVISION
179 South Street
West Hartford, Connecticut
06110

HARRISONBURG DIVISION
101 Burgess Road
Harrisonburg, Virginia
22801

MARSHALLTOWN DIVISION
811 East Main Street
Marshalltown, Iowa
50158

RIVERSIDE DIVISION
1850 Massachusetts Ave.
Riverside, California
92507

SUBSIDIARIES

DUNHAM-BUSH of Canada Limited
140 Wendell Avenue
Weston, Ontario

DUNHAM-BUSH, LTD.
Fitzherbert Road, Farlington
Portsmouth, Hampshire, England

DUNHAM-BUSH INTERNATIONAL: 175 South Street, West Hartford, Connecticut 06110, U.S.A.
CABLE: DUNBUSH or TELEX: 994469

SALES OFFICES

ALABAMA
Birmingham
Mobile

ARIZONA
Phoenix

ARKANSAS
Little Rock

CALIFORNIA
Arcadia
Los Angeles
San Diego
San Francisco

COLORADO
Denver

CONNECTICUT
Hartford
New Haven

FLORIDA
Jacksonville
Miami
Orlando
Tampa

GEORGIA
Atlanta

HAWAII
Honolulu

ILLINOIS
Chicago
Peoria
Rockford

INDIANA
Indianapolis
Michigan City

IOWA
Des Moines

KANSAS
Lenexa

KENTUCKY
Louisville

LOUISIANA
New Orleans
Shreveport

MAINE
Lewiston

MARYLAND
Baltimore
Silver Spring

MASSACHUSETTS
Boston
Springfield

MICHIGAN
Detroit
Grand Rapids
Kalamazoo

MINNESOTA
Minneapolis

MISSISSIPPI
Jackson

MISSOURI
Kansas City
St. Louis

MONTANA
Billings
Great Falls

NEBRASKA
Omaha

NEW JERSEY
Little Falls
South Amboy
Union

NEW MEXICO
Albuquerque

NEW YORK
Albany
Buffalo
New York City
Rochester
Syracuse

NORTH CAROLINA
Charlotte
Greensboro

OHIO
Akron
Cincinnati
Cleveland
Columbus
Dayton
Delaware
Toledo

OKLAHOMA
Oklahoma City
Tulsa

OREGON
Portland

PENNSYLVANIA
Harrisburg
Philadelphia
Pittsburgh
Pittston

RHODE ISLAND
Providence

SOUTH CAROLINA
Columbia
Greenville

TENNESSEE
Chattanooga
Memphis
Knoxville
Nashville

TEXAS
Austin
Corpus Christie
Dallas
El Paso
Fort Worth
Houston
Lubbock
San Antonio

UTAH
Salt Lake City

VIRGINIA
Alexandria
Richmond

WASHINGTON
Seattle
Spokane

WEST VIRGINIA
Barboursville

WISCONSIN
Milwaukee

Exhibit A-8

DUNHAM-BUSH INSTALLATION, OPERATION AND MAINTENANCE MANUAL

PUMP SECTION
File No. 3562A

CENTRIFUGAL PUMPS
Type EB; ES

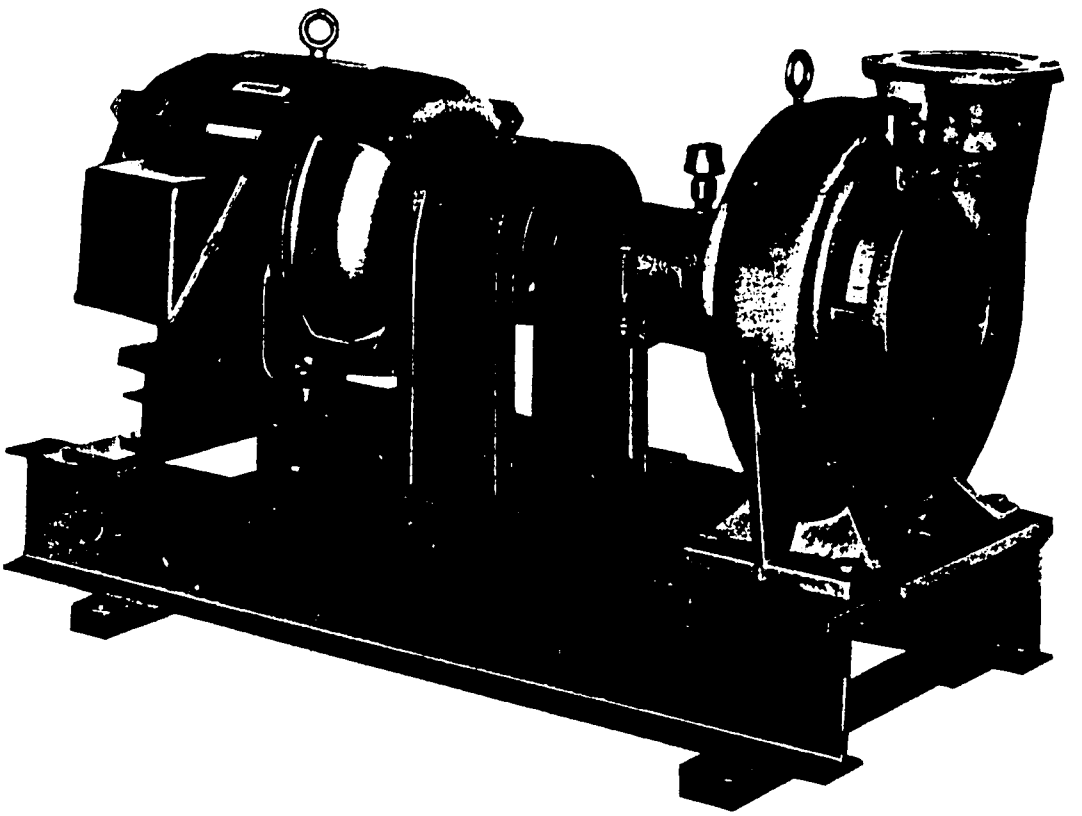

INDEX

INTRODUCTION 2

SECTION I – INSTALLATION 2
- LOCATION 2
- FOUNDATION 2
- MOUNTING PUMP 2
- PIPING 2
- SUCTION PIPING 3
- DISCHARGE PIPING 3
- PIPING FOR SPARE PUMPS 3
- INSTALLING PUMP 3
- ALIGNING PUMP AND DRIVER 4

SECTION II – OPERATION 5
- STARTING PUMP 5
- OPERATING AT REDUCED CAPACITY . . 5
- OPERATING ROUTINE 5
- STOPPING 5

SECTION III – MAINTENANCE 7
- DISASSEMBLY 7
- INSPECTION AND REPAIR 9
- ASSEMBLY 9

SECTION IV – TROUBLE SHOOTING 12

SECTION V – REPAIR PARTS 13
- BEARING ASSEMBLIES OF EB & ES PUMPS 13
- CUTAWAY OF EB & ES PUMPS 14
- PARTS LIST OF EB & ES PUMPS 15

INTRODUCTION

The Dunham-Bush Type E pump is a radially split, horizontal, cantilevered single stage, base mounted centrifugal pump, featuring a double volute (to reduce radial hydraulic loads on the impeller and insure long bearing life) and double suction impeller (reducing NPSHR and balancing axial thrust). These pumps are supplied with an end face mechanical shaft seal installed, which is especailly selected for reliability and life on the particular pump application. Pumps are usually supplied as complete units including the motor which is connected to the pump through a flexible coupling. This flexible coupling has been selected for the required torque transmission, quiet operation and misalignment tolerance. All components are supplied on a rigid structural steel base which has been designed to eliminate any "sound box" effect.

SECTION I—INSTALLATION

A. LOCATION

1. For satisfactory operation of any centrifugal pump it is necessary that adequate net positive suction head (NPSH) be available at the pump suction connection (NPSH is the total head in feet absolute, less the vapor pressure of the liquid in feet absolute, available to the pump). For this reason the pump should be located as close to the liquid source as possible.

2. Adequate head room should be provided for the use of lifting equipment.

3. Adequate space should be allowed for inspection during pump operation.

B. FOUNDATION

The foundation should be solid and substantial enough to absorb mechanical vibration. In general, concrete foundations are the most satisfactory. Where concrete foundations are used, foundation bolts should be supplied (located as shown on dimensional drawings) which are imbedded in the concrete. It is recommended that each bolt be fitted with a pipe sleeve approximately 2½ times the bolt diameter and with a washer to support the head of the bolt in the sleeve. After the concrete is poured, the pipe sleeves remain in place allowing the foundation bolts to be shifted for alignment with the holes in the base (see Fig. 1 and 2).

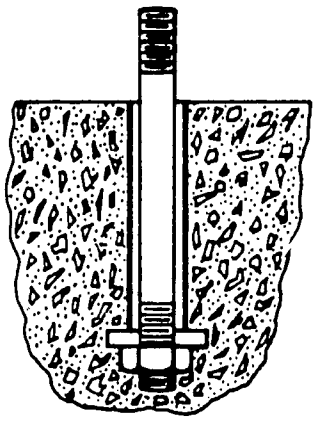

FIGURE 1

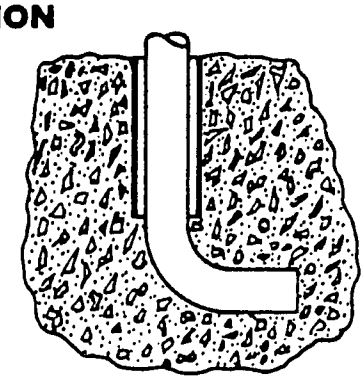

FIGURE 2

C. MOUNTING PUMP

1. Uncrate pump leaving all instructions attached and install at its' place of operation.

2. Locate leveling plates and shims at each foundation bolt.

3. Level base across driver end, shimming as necessary.

4. Level base across pump end, shimming as necessary.

5. Level base lengthwise and tighten nuts on the foundation bolts evenly.

D. PIPING

1. Both suction and discharge piping should be as short and as direct as possible. There should be as few as possible fittings and bends. Bends where used should, if possible, be made with a long radius.

2. Piping should be adequately supported near the pump to prevent strains being transmitted to the pump when tightening the flange bolts, or when pipe expansion may be expected due to operating temperature.

3. Pipes at the suction and discharge should be as large or larger than the openings in the pump.

4. Gate valves and pressure gages should be installed in both the suction and discharge line to facilitate pump maintenance and performance checks.

E. SUCTION PIPING

1. Suction lines must be free of vapor trapping pockets.

2. In horizontal lines leading to the pump only eccentric-reducers should be used (see Fig. 3 & 4).

3. The suction line must be free from air leaks and adequate provisions should be made for the expansion of hot lines.

4. It is recommended that a strainer be installed near the pump suction nozzle to catch scale or other foreign material. A pressure gauge installed on each side of the strainer can be used for measuring the pressure drop across the strainer.

5. If a strainer or foot valve is to be used on the inlet end of the suction line, the free area through the strainer or valve should be approximately 2½ to 4 times the area of the suction pipe.

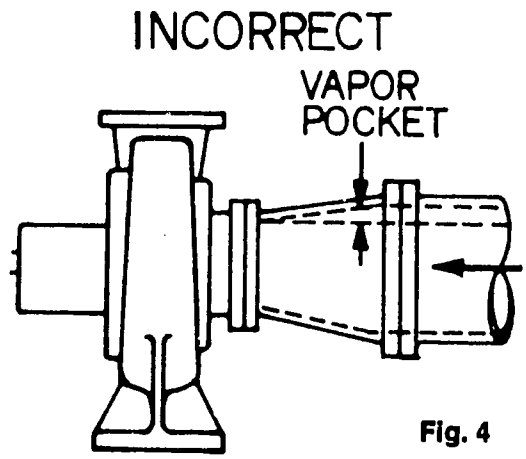

Fig. 4

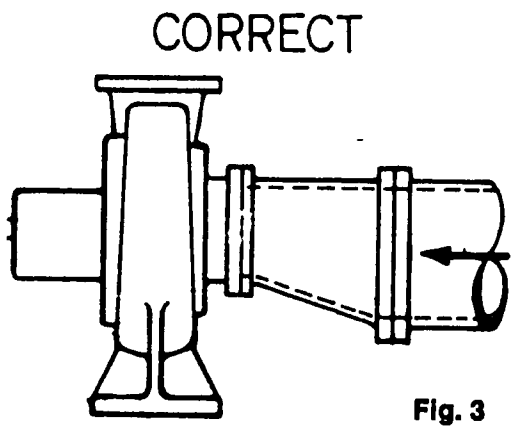

Fig. 3

F. DISCHARGE PIPING

1. On some installations, a check valve and balancing cock in addition to a gate valve may be required in the discharge line. The check valve is used to prevent liquid from running back through the pump in case of failure of the driver. The balancing cock is used to control the pumps' operating capacity by providing a changeable control of the piping system curve. The gate valve is used in priming, starting and when shutting down the pump.

2. When valves are required in the discharge line, they should be located as near as possible to the pump.

3. In some applications when the pump may be operated with zero flow, provisions should be made for recirculating a portion of the liquid from the discharge to the suction to reduce the possibility of the pump overheating.

G. PIPING FOR SPARE PUMPS

The operating and spare pumps in high temperature service should be piped so that hot liquid from the discharge of the operating pump circulates continuously through a by-pass to the spare pump and back to the suction of the operating pump. This can greatly reduce thermal shock when the spare pump is started.

H. INSTALLING PUMP

1. Make up the piping connections to the discharge and suction nozzle. All piping must be properly supported by hangers and not by the pump.

2. Fill bearing bracket assembly with American Rycon No. 21 or Sunoco Sunvis 747 Oil until oil level is between the high and low level marks on the sight glass (with pump stopped). Periodic inspections should be made to assure that adequate oil level is maintained.

3. Wire the pump motor for the voltage required per wiring diagram on motor nameplate or in cover of motor terminal box. All wiring must be in accordance with local regulations. If motor is damaged due to improper wiring, guarantee is void.

I. ALIGN PUMP & DRIVER

1. Woods type S or SB are standardly supplied on these pumps. They are assembled and aligned at the factory but the alignment should be checked due to loading, off-loading, transportation and leveling of base. The coupling size is die stamped in the coupling flange.

   a. Check parallel misalignment by placing a straight edge across the two coupling flanges (see Fig. 5) and measure the offset at various points around the periphery of the coupling to determine the maximum offset. This value should not exceed the value under Fig. 7 and should be as close to zero as possible. Do not rotate coupling.

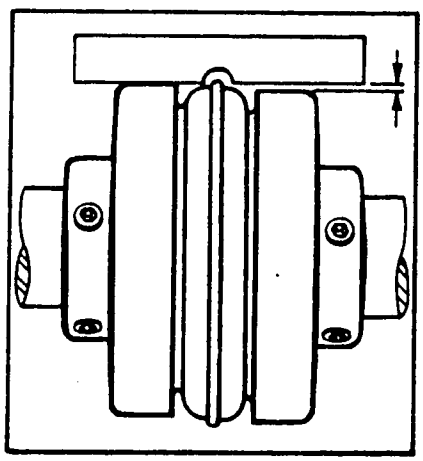

FIGURE 5

Note: Woods type S and SB couplings utilize a wire ring to hold the two halves of the flexible member together. This ring may be removed for alignment or a notched straight edge may be used.

   b. Check angular misalignment by using a micrometer or micrometer calipers to measure the gap between the two flanges (see Fig. 6). Measure this gap at intervals around the periphery of the coupling to determine the minimum and maximum gap. The differences in these two values should not exceed the values given in Fig. 7 and should be as close to zero as possible. If the angular misalignment was adjusted, go back and recheck the parallel alignment.

NOTE: If the shaft does not extend completely through the bore of the flange, it must engage the bore a distance equal to or greater than the diameter of the shaft. For example, a flange with 1 inch bore must grasp at least 1 inch of the shaft.

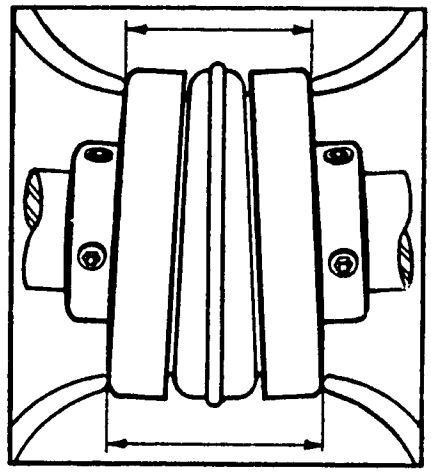

FIGURE 6

In no case should the distance between shafts be less than 1/8 inch.

If the coupling is being used on a sleeve bearing electric motor, the coupling should be made up with the motor armature at its electrical center.

DO NOT rotate the coupling while making alignment checks.

The wire ring must be in position in the groove in the center of the sleeve to operate the pump. It may be necessary to pry the ring into position with a blunt screwdriver.

2. Check the safety codes in your locality to see if protective guards and/or shields are required. Coupling guards are standardly supplied and must be replaced before operating the pump.

Flange Size	Type S & SB	
	Parallel	Angular
5	.015"	.056"
5J	.015"	.056"
6	.015"	.070"
6J	.015"	.070"
7	.020"	.081"
7J	.020"	.081"
8	.020"	.094"
8J	.020"	.094"
9	.025"	.109"
10	.025"	.128"
11	.032"	.151"
12	.032"	.175"
13	.040"	.195"
14	.045"	.242"
16	.062"	.330"

FIGURE 7

SECTION II—OPERATION

A. STARTING PUMP

1. Open suction and discharge valves to pump. These pumps have a mechanical seal and must NOT be run dry. Open cock at top of case to vent out any air.

   NOTE: a. If pump is above the level of the liquid to be pumped, close the discharge valve. If the pump is below the level of the liquid, open the discharge valve 1½ to 2 turns.

   b. Prime the pump. All air and vapor must be removed. The pump case and suction pipe must be filled with liquid before the pump is started.

2. Rotate the pump shaft by hand to be sure pump is not binding. Checking for sticking should also be done after a prolonged pump shutdown.

3. Start pump and check for correct rotation according to the arrow on the case. If running in wrong direction on three phase, change any two leads to the motor. Disconnect power before changing wiring.

4. Lack of capacity and head may indicate the passageways of the pump impeller have become clogged with foreign matter or motor speed is low. If speed of motor is low, check the wiring connections at the motor. If wired for 460 volt current, but actually operating on 230 volt current, the motor will never come up to proper speed and may burn out. If low voltage occurs, notify local power company. Slugging of air is another cause of low capacity and head on a closed system. Be sure the system is properly vented of all air — see further notes under Trouble Shooting — Section IV.

WARNING — DO NOT ATTEMPT TO OPERATE PUMP WITH CLOSED SUCTION VALVE!

5. As soon as the pump is up to full speed, open the discharge valve slowly. Do not let the pump run with the discharge valve closed.

6. Check pressure gauges on each side of the strainer in the suction line. A pressure drop across the strainer indicates it is becoming clogged with dirt or scale. In this case, the pump should be shut down and the screen cleaned or replaced. A clogged strainer can cause damage to the pump.

7. The pump should be shut down if it fails to develop its rated discharge pressure at operating speed, if bearings overheat or there is undue vibration or noise.

B. OPERATING AT REDUCED CAPACITY

If the pump is connected to a constant speed driver, capacity can be reduced by throttling the discharge. If the pump is connected to a variable speed driver, reduction of both the head and the capacity can be accomplished either by reducing the speed or by throttling the discharge.

When throttling the discharge, a by-pass connection may be used to by-pass sufficient liquid to prevent overheating.

C. OPERATING ROUTINE

1. Check bearing temperatures periodically. If there is overheating, check the oil level in the reservoir and the oil temperature. When ambient temperature is normal, the skin temperature should not exceed 165°F. American Rycon No. 21 or Sunoco Sunvis 747 oil should be used when adding or changing oil.

   a. Normal inspection consists of periodic checks of oil gauge for proper oil level which is between the high and low level marks on the sight glass with the pump stopped.

   b. Replacement of the oil in the bearing bracket depends upon the application of the pump, breakdown or contamination of the oil. The major cause of premature bearing failure is oil contamination and as such the oil should be changed after the first 100 hours of operation. Thereafter, 2000 hours is normal for oil changes for average pump applications. This may be accomplished by disconnecting power to pump and removing oil level gauge then flushing out with kerosene or fuel oil. Replace oil level gauge and fill bearing bracket with oil until oil level is between high and low oil level marks.

2. Lubricating pump motor should be done per motor manufacturer's recommendations.

3. Check seals for leakage.

4. Check suction and discharge pressure gauges. If the differential pressure drops critically, shut down the pump at once.

D. STOPPING

The pump should be shut down rapidly to keep liquid in the pump and prevent parts from seizing. After stopping the driver, close the discharge valve and then the inlet valve, in that order. When pumps are operating in parallel, it is sometimes necessary to close the discharge valve immediately after stopping the driver to prevent reverse rotation. If pumps are to remain idle under freezing conditions, precautions, such as draining the case, should be taken to avoid damage.

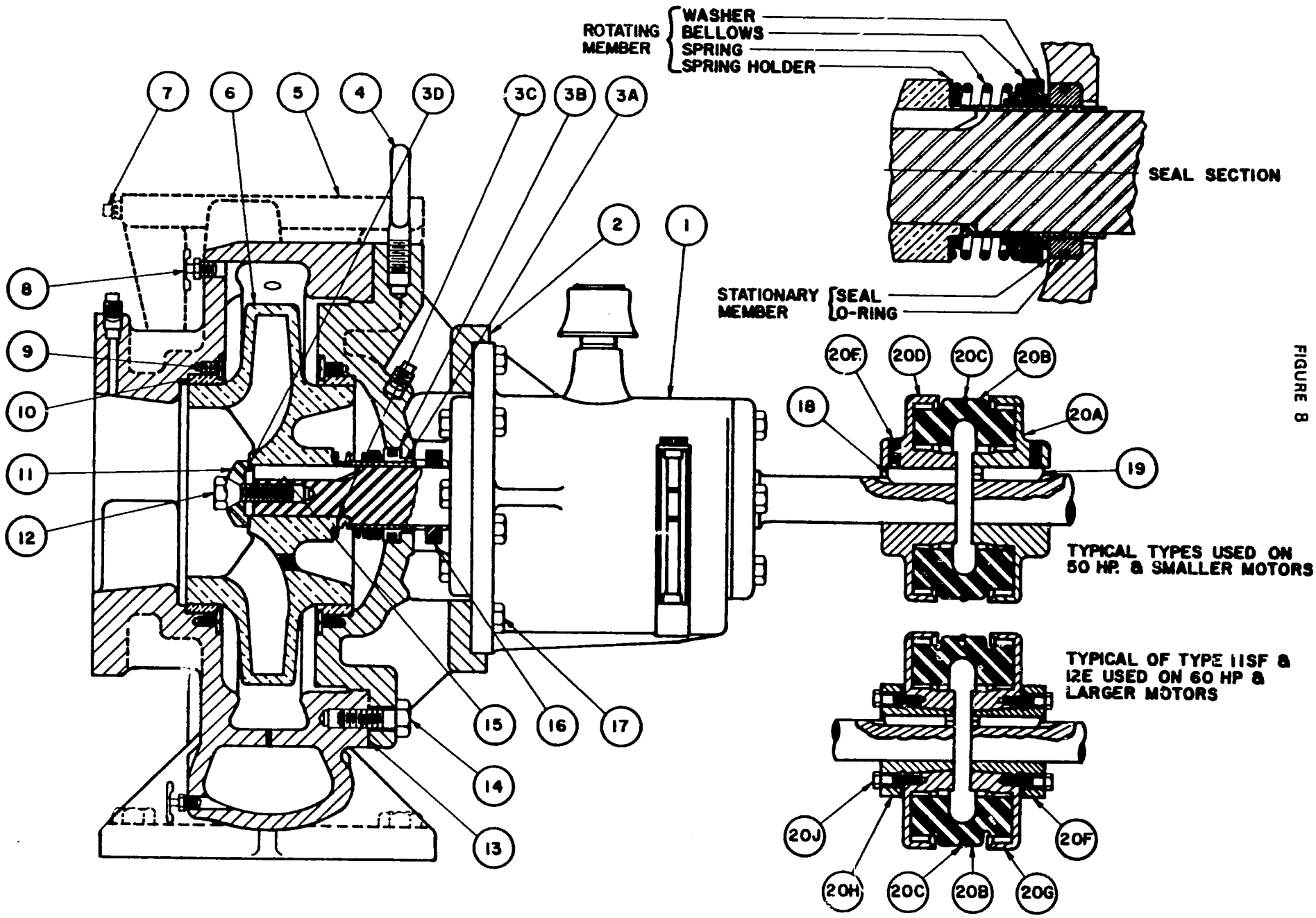
ROTATING MEMBER
WASHER
BELLOWS
SPRING
SPRING HOLDER
SEAL SECTION
STATIONARY MEMBER
SEAL
O-RING
7
6
5
4
3D
3C
3B
3A
2
1
8
9
10
11
12
13
14
15
16
17
18
19
20A
20B
20C
20D
20E
20F
20G
20H
20J
TYPICAL TYPES USED ON 50 HP. & SMALLER MOTORS
TYPICAL OF TYPE 11SF & 12E USED ON 60 HP & LARGER MOTORS

FIGURE 8

130

SECTION III –MAINTENANCE

A. DISASSEMBLY OF PUMP (Ref. Fig. 8)

1. Disconnect power to pump.
2. Disassemble coupling.
   a. Use the following procedure, if no bushing is used between coupling half and shaft.
      1. Slip ring (20C) from its groove in the sleeve (20B) and let it hang loose.
      2. Remove set screws (20E) from the pump flange (20D) and the motor flange (20A).
      3. Slide the flanges apart and remove the sleeve (20B) and ring (20C).
   b. If bushings are used between coupling half and shaft, proceed as follows.
      1. Slip ring (20C) from its groove in the sleeve (20B) and let it hang loose.
      2. Remove screws (20J) from the bushings (20F & 20H) and loosen the bushings (20F & 20H) from their flanges (20G).
      3. Slide flanges (20G) apart and remove the sleeve (20B) and ring (20C).
3. Remove the pump half of the coupling (20D or 20H) and the pump key (18) from pump shaft.
4. Disengage the 16 hex head screws (14) holding the head (2) to case (5).
5. The head (2) and bearing assembly (1) can now be removed from the case (5) using jack screws if necessary. Provisions are made on the head for 3 jack screws. Care must be exercised when using the jack screws as binding may occur on the inner fit of head to case if head is not jacked out evenly.

   NOTE: The bearing assembly must be supported during this procedure and not allowed to drop.
6. Remove the head gasket (13) from the case (5) or head (2) and clean both surfaces.
7. To remove the impeller screw (12) turn it counter-clockwise.
8. Remove the impeller cap (11) and washer (3D).
9. Remove the impeller (6) from the shaft.

   NOTE: An impeller puller (SKB2-322) is available from Dunham-Bush. The impeller is drilled and tapped for its use.
10. The impeller key (15) and sleeve gasket (3C) may now be taken from the shaft.
11. Remove the sleeve (3A) and seal (3B) from the shaft.

    NOTE: The stationary seat of the seal will remain in the head (2).
12. The stationary seat of the seal (3B) can now be removed from the head (2).
13. Clean the pump shaft with solvent.

    NOTE: If only the mechanical seal is to be replaced, go to assembly instructions, Item C, Step 9.
14. Remove the complete bearing assembly (1) from head (2) by unscrewing the eight cap screws (17).
15. The wear ring (10) can now be removed from head (2) by disengaging the binding head screws (9).
16. Remove the wear ring (10) from case (5) by removing the binding head screws (9).
17. Disassembly of Bearing Assembly (1).
    a. Remove water slinger (16) from the shaft.
    b. If the pump is supplied with ball bearings (Model EB) refer to Fig. 9 and proceed as follows:
       1. Remove the oil gauge (41) and drain the oil.
       2. Remove the outboard cap and the oil seal (40A & 40B) from housing (34) by removing the 6 cap screws (39).
       3. Remove the inboard cap and the oil seal (32A & 32B) from housing (34) by removing the 6 cap screws (39).
       4. Remove gaskets (33) both inboard and outboard ends and clean the surfaces on both caps and housing.
       5. Move the shaft (31) towards outboard end until the bearing (37) clears housing (34).
       6. Remove the retaining ring (36) from the housing (34) then remove the shaft (31) with bearings (37 & 42) from the housing (34).
       7. Remove the retaining ring (38) from the shaft (31).
       8. Remove the bearings (37 & 42) from the shaft (31) with a steady press. Do not hammer off as this can easily result in damage or introduction of foreign particles into the bearing.
    c. If the pump is supplied with sleeve bearings (Model ES) refer to Fig. 10 and proceed as follows:
       1. Remove the oil gauge (65) and drain the oil.

BALL BEARING ASSEMBLY

FIGURE 9

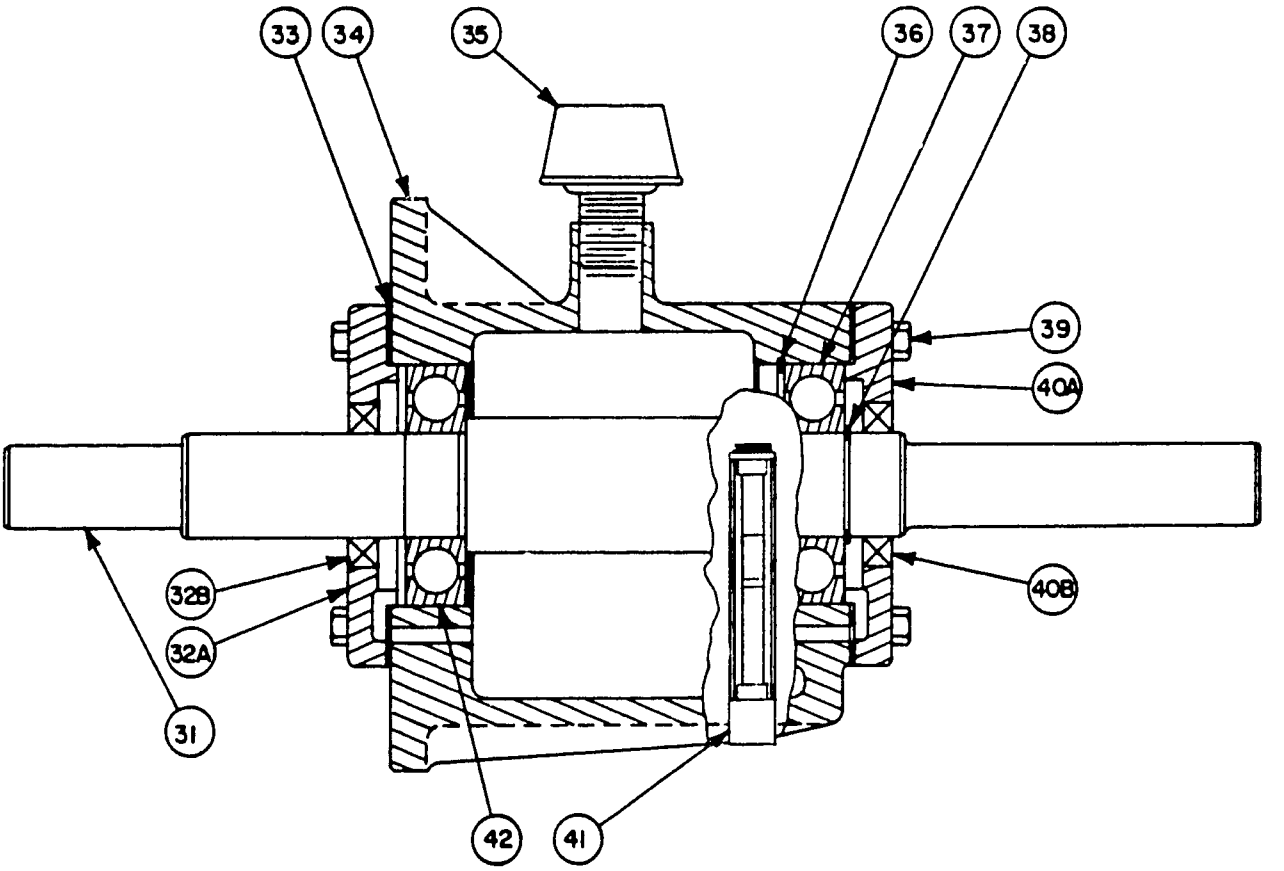

SLEEVE BEARING ASSEMBLY

FIGURE 10

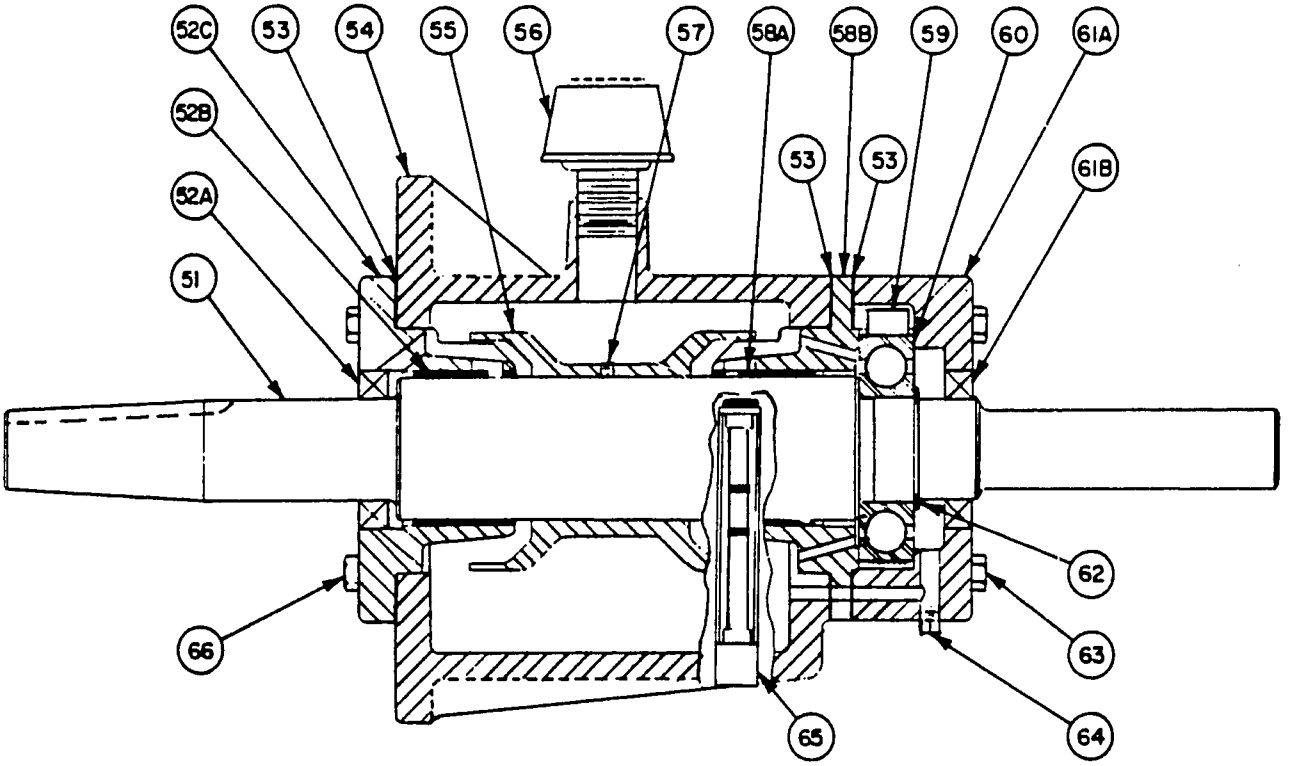

2. Remove the outboard cap and the oil seal (61A & 61B) from the housing (54) by removing the 6 cap screws (63).
3. Remove the shaft (51), slinger (55), back bearing (58), ball bearing (60), and spring (59) in one piece from the housing.

   NOTE: Do not drag the shaft across the front bushing (52B) as scratching and gouging will likely result rendering the bushing (52B) inoperative.

4. Remove the inboard bearing (52) comprised of an oil seal, bushing and flange (52A, B, C) by removing the 6 cap screws (66).
5. Remove spring (59) from the ball bearing (60).
6. Remove the retaining ring (62) from the shaft (51) and remove the ball bearing (60) with a steady press. Do not hammer off as this can easily result in damage or introduction of foreign particles into the ball bearing.
7. Remove the back sleeve bearing (58) comprised of a bushing and flange (58A & B) from shaft.
8. Remove the 3 gaskets (53) and clean all gasket faces.

B. INSPECTION AND REPAIR OF PUMP

1. Clean all parts and inspect for wear or damage giving particular attention to:

   a. Inspect the oil seals (32B & 40B on EB; 52A & 61B on ES Models) for wear, abrasion or cuts.
   b. Check shaft for wear, scoring and for straightness. Shaft must be straight within 0.0015 inch total indicator runout.
   c. Inspect the mechanical seal faces (3B) for wear, scratches or gouges.

      NOTE: These are precision lapped surfaces and extreme care must be exercised not to handle or scratch them. If seal replacement is necessary, the complete assembly should be replaced (Seal replacement kit item No. 3).

   d. Polish out any scratches on shaft or replace it.

2. Wash the demister screen (56) once yearly under normal operating conditions. Under severe operating conditions clean it more often.

C. ASSEMBLY OF PUMP

1. If the pump is supplied with ball bearings (EB Models) refer to Fig. 9 and proceed as follows:

   a. Install bearing (42) on inboard end of the shaft (31) and bearing (37) on outboard end of the shaft, using a square, uniform pressure. Do not hammer or pound these bearings into place as damage and/or introduction of foreign particles will likely result.
   b. Replace the retainer ring (38) in its groove on the shaft.
   c. Slide the shaft with the bearings through the housing (34), positioning bearing (42) approximately under the demister (35) connection.
   d. Replace the retaining ring (36) in the housing (34), then slide the shaft and bearings into position. Be sure that the bearing (37) shoulders against the retaining ring (36).
   e. Install gaskets (33) on caps (32A & 40A).

      NOTE: Care must be exercised that the bolt holes and the oil return hole in (both) the caps (32A & 40A) and gaskets (33) properly line up.

   f. Install caps (32A & 40A) with oil seals (32B & 40B) onto the housing bolting it together with the cap screws (39).

      NOTE: f1. If the oil seals require replacement, it is recommended that they be replaced as an assembly (Part 32 or Part 40).

      f2. The offset bolt will insure the proper positioning of the oil return hole.

      f3. When placing the cap and oil seal assembly over the shaft, be careful not to cut or gouge the oil seal on the shaft.

      f4. On some pumps a garter (or back up) spring is supplied in the oil seal. Do not allow it to slip down onto the shaft when bringing the seal over the shaft shoulders.

   g. If demister (35) was removed, replace it.
   h. Replace the oil gauge (41).
   i. Slide the water slinger (8) onto shaft (31) from the impeller end of shaft. The slinger should be set so there is approximately ½" clearance to the bearing cap (32A).

2. If the pump is supplied with sleeve bearings (ES Models) refer to Fig. 10 and proceed as follows:

   a. Using a new gasket (53), replace front bearing (52) into the flange end of the bearing housing (54). Assemble these parts using the 6 cap screws (66).

NOTE: There is one offset bolt for positioning purposes and care should be exercised to line up the gasket (53) accordingly.

b. Slip back the bearing (58) onto shaft (51) from the coupling END (not the drilled and tapped end) and slide forward until contact with slinger (55) is encountered.

NOTE: Care must be exercised that the back bearing bushing (58A) is not cut, scratched, or gouged on shaft keyway and shoulders.

c. Install ball bearing (60) from coupling end of the shaft (51), using a square uniform pressure. Do not hammer or pound this bearing into place as damage and/or introduction of foreign particles will likely result.

d. Replace the retaining ring (62) in its groove on the shaft (51).

e. Place housing (54) in a vertical position with the head mating flange down.

f. Place a new gasket (53) on the gasket surface of the housing (54). Be sure that the offset bolt and oil return holes line up between the gasket and housing.

g. Take the shaft sub-assembly and slide it, impeller end first, thru the housing and the front bearing. The assembly will be stopped by the ball bearing.

NOTE: Care must be exercised that the front bearing bushing (52B) and the front bearing oil seal (52A) is not cut, scratched, or gouged on shaft keyway and shoulders. On some pumps a garter (or back up) spring is supplied on the oil seal (52A) and care must be exercised that it is not allowed to slip down onto the shaft when bringing the seal over the shaft shoulders.

h. Place a new gasket (53) onto the gasket face of flange (58B) making sure that the offset holes and the oil return holes of the housing (54) gaskets (53) and flange (58B) all line up.

i. Replace spring (59) onto ball bearing (60) with nib at top, in line with the demister.

j. Replace the cap (60) onto the bearing housing (54) making sure that the offset hole lines up.

NOTE: The offset bolt will insure proper positioning of the oil return hole. Do not cut or gouge the oil seal (61B) on the shaft, or allow the garter spring in the oil seal (if supplied) to slip down onto the shaft.

k. Assemble the cap (61) to the bearing housing using the 6 cap screws (63).

l. If demister (56) was removed, replace it.

m. Replace oil gauge (65).

n. Slide water slinger (8) onto the shaft (51) from impeller end. The slinger should be set so there is approximately ½" clearance to the bearing cap (52).

3. Fill bearing assembly (1) with oil, American Rycon No. 21 or Sunoco Sunvis 747, until the level is between the high and low marks on the oil gauge. Turn the shaft by hand and inspect seals and gaskets for leaks.

4. Fasten the head (2) to the bearing assembly (1) by using the 8 cap screws (14).

5. Replace the wearing ring (10) in the head (2). Lock in place by using 2 binding head screws (9).

6. Replace the wearing ring (10) in the case (5). Lock in place by using 2 binding head screws (9).

NOTE: There are two reliefs cut into the wearing rings (10) for acceptance of screw heads (9).

7. Check the shaft for angular alignment and concentricity.

a. Angular alignment may be checked by fastening a dial indicator to the impeller end of the shaft and a reading taken from the face of the head flange (2). Rotate the shaft from the coupling end. Total indicator reading should not exceed 0.00005".

b. Concentricity may be checked by fastening a dial indicator as above but with a reading taken from the internal diameter of the wear ring which is parallel to the shaft. TIR should not exceed 0.005". Rotate the shaft from the coupling end.

c. A check for a bent shaft can be performed by clamping the dial indicator to the head flange and a reading taken from the impeller shaft diameter. Rotate the shaft from coupling end. TIR should not exceed 0.005".

8. Place "O" ring of mechanical seal into stationary seat. Make absolutely certain that the recess in the head (2) which accepts the stationary seat is clean and free of burrs. Slide the stationary seat (with lapped face towards impeller) over the shaft and into the recess in the head. This assembly must be squarely positioned with the head and well seated into its bore.

CAUTION: Do not scratch, gouge or in any way mar the lapped face or seal leakage can occur.

NOTE: A light coating of lubricant will ease assembly.

134

9. Place film of white lead on the inside diameter and on the outside diameter at impeller end of sleeve (3A).

10. Assemble rotating element of the mechanical seal onto sleeve (3A) such that the sealing face (this is identified by its lapped surface) is away from the key slot but so the seal spring holder is on the sleeve (Ref. seal detail Fig. 7).

    CAUTION: Do not scratch, gouge or in any way mar the lapped face or seal leakage can occur.

    NOTE: A light coating of lubrication on the inside diameter of the seal bellows will facilitate assembly.

11. Slip sleeve and seal assembly over shaft and slide back GENTLY until contact is made between the seal faces.

12. Place impeller key (15) into key slot of shaft, rotate sleeve (3A) until key slot matches and slide key back.

13. Place sleeve gasket (3C) over shaft and position on end of sleeve (3A).

14. Place coating of white lead in the bore and on the seal end of impeller (6) and slide the impeller onto shaft.

15. Coat a new impeller washer (3D) with white lead and place it on the impeller hub. Place the impeller cap (11) on the washer and fasten in place with the impeller screw (12).

16. Using a new gasket (13) bolt the head (2) onto the case (5) with 16 hex head bolts (14).

    NOTE: One bolt hole is offset which insures proper alignment of head (2) to case (5).

17. Assemble the coupling

    a. If no bushing is used

       1. Place keys (18) in keyway.
       2. Reposition flanges (20A & 20D) placing the sleeve (20B) into position. Hang the ring (20C) loosely on the sleeve.
       3. Be sure the teeth on the sleeve are fully engaged with the teeth in both flanges and the keys are properly aligned and seated in their keyways.
       4. Tighten set screws (20E) and place ring (20C) in its groove on the sleeve.

    b. If bushings are used

       1. Place keys (18) in keyway.
       2. Place flanges (20G) with bushings (20F & 20H) and sleeve (20B) into position. Hang the ring (20C) loosely on the sleeve.
       3. Be sure the teeth on the sleeve are fully engaged with the teeth on both flanges, keys are properly aligned and seated in their keyways and the bolt holes in the bushings line up with those in the flange.
       4. Fasten the bushing to the flange with screws (20J) and place the ring (20C) in its groove on the sleeve.

    c. Check the coupling alignment (Section I – Paragraph 1).

    d. Replace coupling guard.

    e. Restore power to driver.

    f. Follow the procedures for starting the pump (Section II).

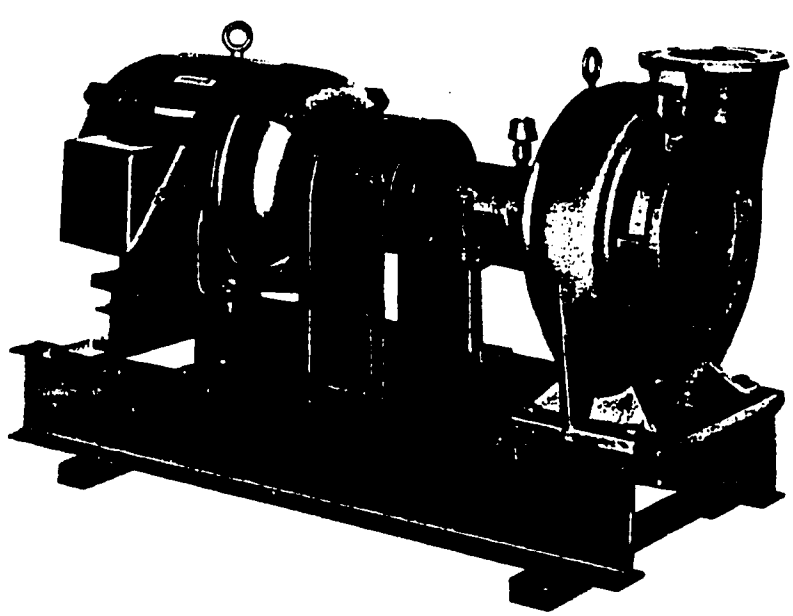

SECTION IV—TROUBLE SHOOTING

Operating troubles and their probable causes are as follows:

A. INSUFFICIENT OR NO DISCHARGE

1. Wrong direction of rotation.
2. Pump not primed.
3. Suction line not full of liquid.
4. Air or vapor in suction line.
5. Suction pipe not submerged enough.
6. Available NPSH not sufficient.
7. Pump not up to rated speed.
8. Too much system head.

B. INSUFFICIENT PRESSURE

1. Wrong direction of rotation.
2. Suction line not full of liquid.
3. Air or vapor in liquid.
4. Air leaks in suction line.
5. Suction line not submerged enough.
6. Available NPSH not sufficient.
7. Pump not up to rated speed.
8. Mechanical defects:
   a. Wearing rings worn.
   b. Impeller damaged.
   c. Internal leakage.

C. CAVITATION AND NOISE

1. Air or gas in liquid.
2. Suction line not filled with liquid.
3. Suction line not submerged enough.
4. Available NPSH not sufficient.

D. PUMP LOSES SUCTION AFTER STARTING

1. Suction line not full of liquid.
2. Air leaks in suction line.
3. Air or vapor in liquid.
4. Air or vapor in suction line.
5. Suction line not submerged enough.
6. Available NPSH not sufficient.

E. EXCESSIVE POWER CONSUMPTION

1. Speed too high.
2. Insufficient head.
3. Mechanical defects:
   a. Misalignment.
   b. Shaft bent.
   c. Rotating element dragging.
   d. Piping improperly supported.

F. BEARINGS OVERHEAT

1. Improper or poor grade of oil.
2. Dirt in bearings.
3. Dirt or moisture in oil.
4. Failure in oiling system.
5. Bearings too tight.
6. Misalignment.
7. Pipe improperly supported.

G. VIBRATION

1. Suction line not full of liquid.
2. Air or vapor in suction line.
3. Misalignment.
4. Worn or loose bearings.
5. Rotating element out of balance.
6. Shaft bent.
7. Foundation not rigid.
8. Vibration in the driver.
9. Wrong location of control valve.
10. Pipe improperly supported.

136

SECTION V—REPAIR PARTS

BALL BEARING ASSEMBLY PARTS LIST

ITEM	PART NAME	QUAN-TITY	PART NUMBER DB 11/14 REPLACEMENT	EB11/14	FB11
	COMPLETE ASSEMBLY		D2-C1162	D2-C1165	D2-C1116
31	SHAFT	1	C2-2135	C2-2187	C2-1892
32A	CAP *	1	B2-1946	B2-1607	
32B	OIL SEAL		Part of B2-1946	Part of Cap B2-1607	
33	GASKET	2	B2-1644		
34	HOUSING	1	D2-790		
35	DEMISTER	1	2679		
36	RETAINING RING	1	2885		
37	BALL BEARING	1	2886		
38	RETAINING RING	2	2900		
39	SCREW	12	P-143		
40A	CAP	1	B2-1607		
40B	OIL SEAL		Part of Cap B2-1607		
41	OIL GAUGE	1	2919		
42	BALL BEARING	1	3055	2886	
	PLUG (NOT SHOWN)	1	P-133		

1 QT. OIL IS PART ML 7250

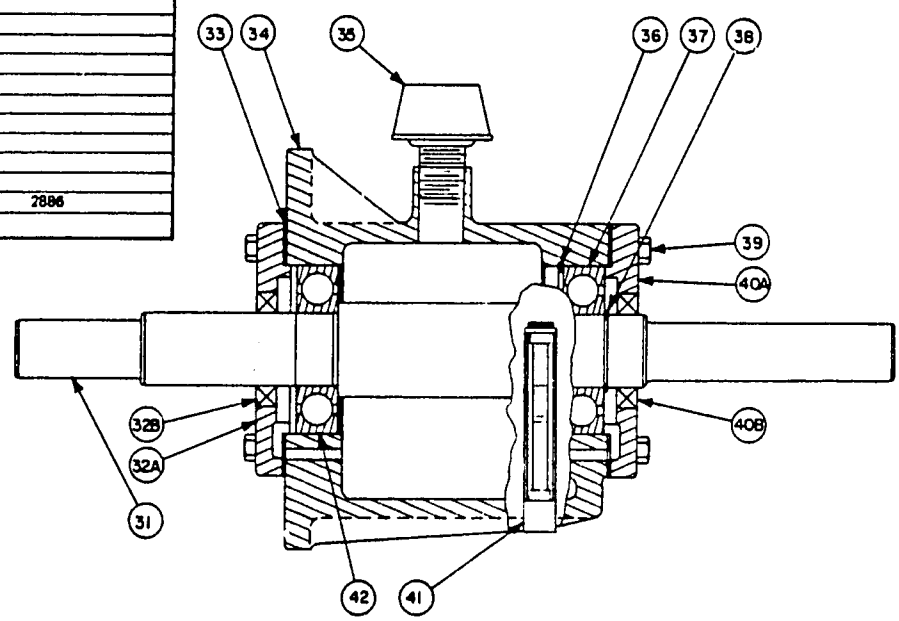

SLEEVE BEARING ASSEMBLY REPAIR PARTS

ITEM	PART NAME	QUAN-TITY	PART NUMBER DS11/14 REPLACEMENT	ES11/14
	COMPLETE ASSEMBLY		D2-C1160	D2-C1184
51	SHAFT	1	C2-1718	C2-2188
52	FRONT BEARING	1	B2-1945	B2-1664
52A	OIL SEAL		Intergal Part of Front Bearing	
52B	BUSHING		Intergal Part of Front Bearing	
52C	FLANGE		Intergal Part of Front Bearing	
53	GASKET	3	B2-1644	
54	HOUSING	1	D2-1259	
55	SLINGER	1	B2-2196	
56	DEMISTER	1	2679	
57	SCREW-SET	1	P-125	
58	BACK BEARING	1	B2-1665	
58A	BUSHING		Intergal Part of Back Bearing	
58B	FLANGE		Intergal Part of Back Bearing	
59	SPRING	1	2920	
60	BALL BEARING	1	2886	
61	CAP	1	B2-1666	
61A	CASTING		Intergal Part of Cap	
61B	OIL SEAL		Intergal Part of Cap	
62	RETAINING RING	2	2900	
63	SCREW	6	P-146	
64	PLUG	1	P-5	
65	OIL GAUGE	1	2919	
66	SCREW	6	P-143	
	PLUG (NOT SHOWN)	1	P-133	

1 QT. OIL IS PART ML 7250

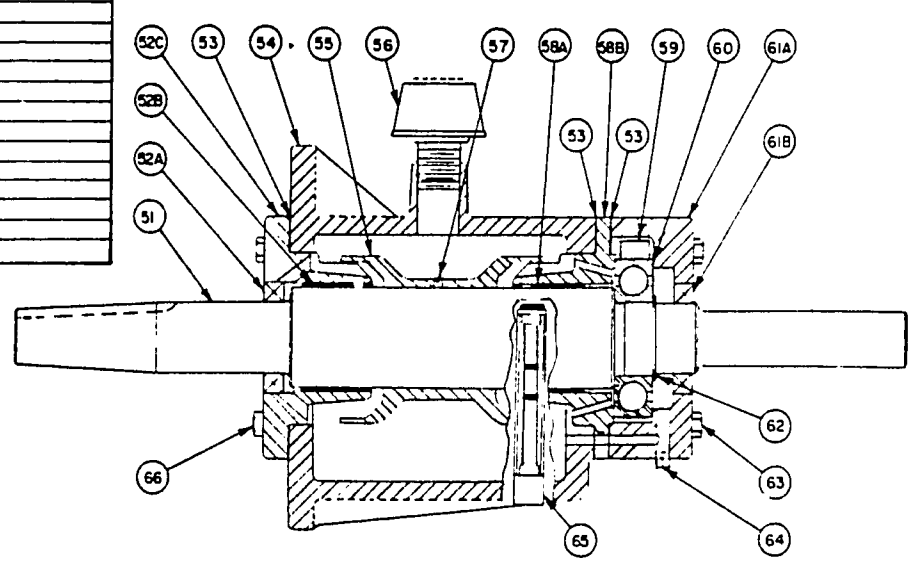

REPAIR PARTS PUMP

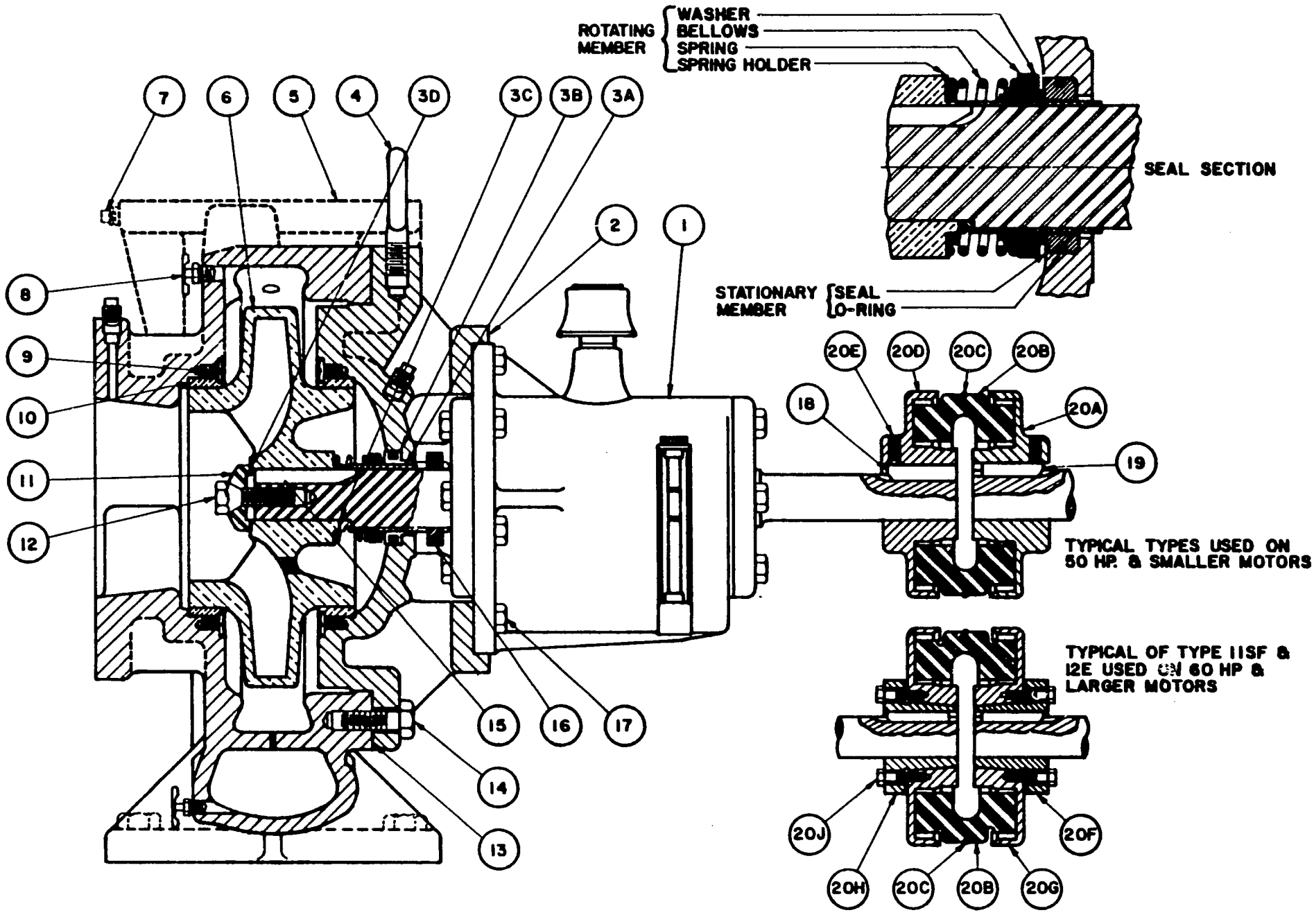

PARTS LIST

ITEM	PART NAME	QUAN-TITY	PART NUMBER					
			EB11	ES11	EB14L	ES14L	EB14H	ES14H
1	BEARING ASSEMBLY	1	D2-C1185	D2-C1184	D2-C1185	D2-C1184	D2-C1185	D2-C1184
2	HEAD	1	C2-1774		C2-1756			
3	SEAL REPLACEMENT KIT	1	ML7829					
3A	SLEEVE	1	A2-2809 (Part of Seal Replacement Kit)					
3B	SEAL	1	2420 (Part of Seal Replacement Kit)					
3C	GASKET–SLEEVE	1	A2-2974 (Part of Seal Replacement Kit)					
3D	WASHER–IMPELLER	1	A2-2395 (Part of Seal Replacement Kit)					
4	EYE BOLT	1	P-161					
5	CASE	1	D2-978		D2-786			
6	IMPELLER	1	D2-946		D2-793		D2-789	
7	PLUG	4	P-2					
8	DRAIN COCK	2	P-170					
9	BINDING HEAD SCREW	4	P-129					
10	WEAR RING	2	A2-2282		A2-2293			
11	IMPELLER CAP	1	A2-2418					
12	IMPELLER SCREW	1	A2-1632					
13	HEAD GASKET	1	B2-1641		B2-1642			
14	SCREW	16	P-158					
15	IMPELLER KEY	1	A2-2810					
16	WATER SLINGER	1	3308					
17	SCREW	8	P-169					
18	PUMP KEY	1	A2-1392					
19	MOTOR KEY	1	Supplied with motor					
20	COUPLING COMPLETE	1	See Table 2					
20A	MOTOR FLANGE	1	(Part of Type S Coupling Complete)					
20B	SLEEVE	1	See Table 3 – All Sizes					
20C	RING	1	(Part of Sleeve)					
20D	PUMP FLANGE	1	(Part of Type S Coupling Complete)					
20E	SCREW–SET	4	(Part of Type S Coupling Complete)					
20F	MOTOR BUSHING	1	(Part of Type SF or E Coupling Complete)					
20G	FLANGE	2	(Part of Type SF or E Coupling Complete)					
20H	PUMP BUSHING	1	(Part of Type SF or E Coupling Complete)					
20J	SCREW–BUSHING	VARIES	(Part of Type SF or E Coupling Complete)					

FOR MOTOR AND COUPLING DATA SEE PAGE 5.
FOR SLEEVE BEARING ASSEMBLY (D2-C1184) REPAIR PARTS SEE PAGE 18
FOR BALL BEARING ASSEMBLY (D2-C1185) REPAIR PARTS SEE PAGE 17
WHEN ORDERING REPLACEMENT IMPELLERS SPECIFY THE DIAMETER AND INCLUDE SERIAL NO.

1 QT. CAN OF BEARING OIL IS PART ML 7250.
CONSULT FACTORY FOR BASE, COUPLING GUARD, MOTOR SPACERS AND DATA ON OTHER SIMILAR PARTS PUMPS WITH SERIAL NUMBERS PRIOR TO 42121 HAVE PRESS IN WEAR RINGS.

SEE PAGE 12 FOR CUTAWAY SECTION

CONTRACT NO. AID/OTR-C-1629
PIO/T NO. 263-026-3-90315
WBEC PROJECT NO. 4631
PROCUREMENT AND TECHNICAL REVIEW
FOR USAID CAIRO, EGYPT

This report section pertains to the following project:

Importer:	Mahmoud and Mosad El Malki
Order No:	EA 10027
L/C Bank:	Bank of America
U.S. Bank L/C No:	620843
L/C Amount:	$46,561.00
DIB L/C No.:	20026
SER/COM:	#2

EQUIPMENT IDENTIFICATION

The equipment and spare parts lists from the suppliers final invoice and the equipment list from the contractor's on-site inspection are itemized in tabular form.

Consistency of the two parts lists may be easily established. This form also indicates compliance with the proforma invoice, contract and bank appraisal report.

Equipment details, such as catalog and serial numbers are shown on the contractor's on-site Equipment Identification form following the Equipment and Spare Parts Lists.

141

EQUIPMENT LIST

CONTRACTOR ON-SITE INSPECTION	DUNHAM BUSH INVOICE # EA 10027 two invoices with same #11-22-78 & 4-25-79	DOCUMENT VERIFICATION		
		PROFORMA INVOICE Dated 9/5/77	CONTRACT LOCAL Dated 8/28/79	D.I.B. APPR. REPORT
(1) Pkg. Chiller IPW120 (w/3 comp.)	Same as on-site	same	same	same
(7) Air Handlers Model HAH-48	Same as on-site	same	same	same
(4) Pumps Model A9D60-2A	Same as on-site	same	same	same

142

SPARE PARTS LIST

CONTRACTOR ON-SITE INSPECTION	DUNHAM-BUSH INVOICE #	COMMENTS
No parts found on-site	No parts listed on invoice	5 to 10 years spare parts are listed in Agreement dated 28 August 1977. No spare parts listed on Proforma dated 5 September 1977.

DATE February 1981

IMPORTER: Mahmoud and Mosad El Malki

DIB L/C# 20026

LOCATION: Mahalla

U.S. L/C 620843

SERVICE: Produce Cold Storage

AMOUNT USD $46,561.00

EQUIPMENT IDENTIFICATION

CHILLER	TYPE 3-Compressor Set	MODEL IPW 120	SERIAL 78B-00379
	Compressor #1	409 CFN	78A-00080
	Compressor #2	409 CFN	78A-00081
	Compressor #3	409 CF	78B-00379G
	Condenser #1	CST C1260	Natl. Bd. 49855
	Condenser #2	CST C1460	Natl. Bd. 47601
	Evaporator	VCH 1360 C	Natl. Bd. 50178

STATUS:

Operational

REMARKS: Oil was dripping fom bottom of Compressor #3. Threaded connection on lower front of compressor housing is the suspected leak source.

144

DATE _____

IMPORTER: _____ DIB L/C# _____

LOCATION: _____ U.S. L/C _____

SERVICE: _____ AMOUNT _____

EQUIPMENT IDENTIFICATION

	TYPE	MODEL	SERIAL
PUMP #1	Condenser Pump	A9D60-2A	7549
PUMP #2	Condenser Pump	A9D60-2A	57548
PUMP #3	Brine Pump	A9D60-2A	57551
PUMP #4	Brine Pump	A9D60-2A	57550

STATUS: Operational.

REMARKS: Importer reports all pump motors become hot during operation. All motor nameplate data indicates 230V/3Ø/60 Hz. C.A.C Corporation says all motors have been rewound for the Egyptian 50 cycle power source.

Contractor's Recommendation: Performance tests including an unloaded RPM count should be conducted.

SER/COM #2

DATE _____

IMPORTER: _____ DIB L/C# _____

LOCATION: _____ U.S. L/C _____

SERVICE: _____ AMOUNT _____

EQUIPMENT IDENTIFICATION

TYPE	MODEL	SERIAL
Air Handling Unit #1	HAH/48	780102113
Motor	(FR.) S184 T	P/N 6-322465-03
Air Handling Unit #2	HAH/48	780102108
Motor	(FR.) S184 T	P/N 6-322465-03
Air Handling Unit #3	HAH/48	780102115
Motor	(FR.) S184 T	P/N 6-322465-03

STATUS: Operational

REMARKS:

146

SER/COM #2

DATE _____

IMPORTER: _____ DIB L/C# _____

LOCATION: _____ U.S. L/C _____

SERVICE: _____ AMOUNT _____

EQUIPMENT IDENTIFICATION

TYPE Air Handling Unit #4	MODEL HAH 48	SERIAL 78010211
Motor	(FR.) S184 T	P/N 6-322465-03
Air Handling Unit #5	HAH 48	780102112
Motor	(FR.) S184 T	P/N 6-322465-03
Air Handling Unit #6	HAH 48	780102109
Motor	(FR.) S184 T	P/N 6-322465-03

STATUS: _____

REMARKS: _____

147

SER/COM #2

DATE _____

IMPORTER: _____ DIB L/C# _____

LOCATION: _____ U.S. L/C _____

SERVICE: _____ AMOUNT _____

EQUIPMENT IDENTIFICATION

TYPE	MODEL	SERIAL
Air Handling Unit #7	HAH 48	780102110
Motor	(FR.) S184 T	P/N 6-322465-03

STATUS: _____

REMARKS: _____

147

EQUIPMENT VALUE

Equipment value will be considered in two parts. PART #1 will determine if the net sale value of the equipment as indicated by Mr. Matava and Mr. Stillson of Dunham-Bush appear to reflect reasonable pricing. Pricing consistency with competitive pricing quotations will also be considered. PART #2 will determine if the net sale price established in PART #1 is consistant with the final invoice. As stated by AID funding regulations, the final invoice amount must reflect reasonable pricing.

PART #1

Competitive quotations were not obtainable on this specific project from the Egyptian Bank, D.I.B. Therefore, the contractor does not have specific competitive pricing information available on this project for evaluation. It is strongly recommended that competitive bids be obtained prior to issuing a letter of credit and kept on file by the lending institution. However, based on previous project experience the "NET SALE PRICE" indicated by Mr. Matava and Mr. Stillson appear to be reasonable.

As stated in the Equipment Identification section, 1 pkg. chiller, 7 air handling units and 4 pumps were installed on this project. According to the "Export Orders" the sale value of this equipment is:

Description	Sales Office Order No.	Unit Cost	Total
*(1) IPWM120 Pkg. Chiller	EA 10027A	$17,849.00	$17,849.00
*(7) HAH-48 Air Handling Units	EA 10027B (approx.) EA 10075A EA 10075A (revised)	1,100.00	7,700.00
(4) Model A9 Pumps	EA 10075B	920.00	3,680.00
			$29,229.00

A second source of sale value documentation appears in a letter from Coolair Corporation to Mr. Tim Stillson, Dunham-Bush International dated January 23, 1979. This letter stated $29,460.00 is the Total Net F.O.B. Factory cost breakdown. This same letter lists $10,001.00 for systems accessories (including valves, 3-way modulating and refrigerant). There is no mention of these accessories on the proforma invoice or the final invoice. No evidence of these items was seen on the job-site or delivered according to the importer. Therefore the $10,001.00 will not be included in this appraisal.

A third source of price verification is supplied by the Dunham-Bush home office. Mr. Matava and Mr. Stillson reported this equipment's "NET SALE VALUE" to be:

1st Shipment	$18,874.00
2nd Shipment	10,478.00
TOTAL "NET SALE VALUE"	$29,352.00

*NOTE: Quantities on Export Order vary from the quantities actually installed at the job-site. Unit prices only, not total prices were used in this report.

Considering the consistancy of the above three sources, the "NET SALE VALUE" of $29,352.00 F.O.B. Factory for this equipment will be considered reasonable.

PART #2

Consistency bewteen the Invoice Amount and the "NET SALE VALUE" was established as follows:

Dunham-Bush Invoice No. EA 10027 (11-22-78)	$31,057.64
Dunham-Bush Invoice No. EA 10027 (4-25-79)	15,503.36
Total Invoiced	$46,561.00
Less "NET SALE VALUE" of installed equipment	($29,352.00)
Retained Funds	$17,209.00

Therefore, $17,209.00 was retained for packaging, freight, insurance and additional profit. This dollar amount represents a mark-up of 58% of the "NET SALE VALUE". A mark-up of this magnitude appears to be a violation of the "Price Provisions" regulation for the use of AID funds. The regulation states, "No funds made available under this Act shall be used for the purchase in bulk of any commodities at prices higher than the market price prevailing in the United States at the time of purchase, adjusted for differences in the cost of transportation to destination, quality, and terms of payment".

It also should be noted that documentation supplied from Dunham-Bush (Sillcox Order #9249-GE) indicated freon totaling $3,150.13 was bought by C.A.C. Corporation for this project (Malki Regrigeration). Freon was not listed on the Proforma Invoice (dated 9-5-77) or the final Invoices (dated 11-22-78 and 4-25-79).

These items were also not found on the job-site location nor were they delivered to the job-site according to the project importer. Quantities of the items listed on the Sillcox Invoice are in excess of the requirements for one facility of this size. If these items were purchased for this project the necessity, present location, and quantity of these items should be explained by C.A.C. Corporation.

EQUIPMENT CAPABILITY

The expected equipment performance capability was reviewed in two project documents: the Bank's Appraisal Report (D.I.B.) and by the project contract.

D.I.B. APPRAISAL REPORT - The Development Industrial Bank's appraisal stated the equipment capacity was to be for 1500 tons of produce (vegetables).

PROJECT CONTRACT - The contract dated August 7, 1978 does not give the expected capacity, tons of produce storage or expected temperature.

The importer stated in an interview with the contractor that the expected capacity was for 1500 tons of produce storage. As outlined above this is identical to the D.I.B. Report expectations. However, the importer also stated that the actual storage capacity was only adequate for 1000 tons of produce.

The contractor agrees that C.A.C. Corporaton should indeed take the necessary steps to increase the produce storage capacity by 500 tons. However, the purpose of this report section is to establish if additional major equipment purchases are required to deliver the expected capacity.

The importer and his operating engineer, Mr. Mohamed Hassona stated that the motors on all four pumps for this project overheated and that they did not believe the motors had been derated to operate at the 50 cycle power source. The contractor noted that nameplate data did indicate a 60 cycle power source requirement. Before purchasing additional equipment the contractor recommends that performance tests including an unloaded RPM count should be conducted for all motors.

SERVICE AND MAINTENANCE

As stated in the introduction both parts and labor are necessary for equipment operation and future maintenance.

PARTS - Parts will be considered by two classifications. Major system components and maintenance or operational parts and supplies.

**System Components such as rings, shafts or compressor components are not included on this project. All parts itemized for this project are maintenance parts or supplies (see next paragraph). Considering that service labor to perform a major overhaul would come from the United States, the contractor agrees that no parts of this type need to be inventoried at the job site.

**Maintenance parts and supplies consist of parts that are used in the normal operation of equipment. Since there is not a universal parts numbering system Dunham-Bush must be relied upon to provide parts identification information. Two parts lists with the associated identification numbers are included as Exhibit B-1 and B-2. Both of these lists identify air handling unit and pump parts. A third list identifying the IPW 120 packaged chiller parts should also be obtained.

57

Spare parts are not listed on any project documentation and the contractor has been unable to secure a recommended list from the Dunham-Bush home office in Hartford, Connecticut.

For convenience in evaluating parts purchases the following parts price list is included:

D & B A9 Centrifugal Pump Parts Prices Exhibit B-3

LABOR - Labor may also be considered by the same two classifications as parts, major system component labor and maintenance labor.

**Service work for major overhauls or replacement of major system components was not found to be available locally. According to the regional sales office for Dunham-Bush, in Athens, start-up and major systems repair labor would be supplied from the United States.

**Maintenance or operational labor must be supplied locally. Mr. Mohamed Hassona is the operating engineer for this project. His twenty-five years of experience include 17 years with Alexandria Refrigeration Company. Mr. Hassona reported that he has replaced some relays and temperature controllers on this equipment. All equipment is now operational. However, there are two existing problems, lower than expected capacity (suspect motors rated for 60 cycle power) and an oil leak from a compressor. It is the contractor's opinion that these two problems should be resolved by Coolair Corporation and Mr. Hassona should be well qualified to handle future maintenance and operational labor. Two additional recommendations are:

154

1) A regular equipment operating log should be kept.
2) Operation and Maintenance Manuals should be carefully read and followed. The following appropriate manuals are included:

D & B Packaged Chillers 25 thru 150 tons	Exhibit B-4
D & B Centrifugal Pumps Type A9	Exhibit B-5

155

SER/COM #2 (El Malki)
DUNHAM-BUSH LITERATURE
EXHIBIT INDEX

EQUIPMENT	REPLACEMENT PARTS LIST	PARTS PRICES	OPERATIONAL & MAINTENANCE MANUALS	RECOMMENDED SPARE PARTS LIST		
IPW 120 Pkg. Chiller			B-4			
Air Handlers Model HAH-48	B-1					
Pumps Model A9	B-2	B-3	B-5			

156

Exhibit B-1

DUNHAM-BUSH

FORM NO. 6293
NEW
FEBRUARY 1980

"HAH(M)" AND "VAH(M)" LOW AND MEDIUM STATIC AIR HANDLING UNIT

REPAIR PARTS LIST FOR MODEL "C" (FROM 1968)

ORDERING INSTRUCTIONS

1. Complete part number and its description is required when ordering.
2. When a part number is not known or shown in the parts catalog, complete model and serial number of the unit on which the part is to be used should be given.
3. Send all orders to: **Dunham-Bush, Inc., Parts Department, Harrisonburg, Virginia**
   Unless otherwise Designated
4. We reserve the right to ship substitute parts or alternate parts when interchangeable with the part ordered. The invoice will cover the price of the actual part shipped.
5. All orders requiring **Special Handling** for delivery to either the local bus station or the airport, will have a $25 additional charge invoiced or actual cost, whichever is higher.
6. Refer to the latest revision of Form 1278 for terms of sale.
7. Refer to the latest revision of Form 6690 for pricing.

REPAIR PARTS LIST
HAH and VAH
LOW and MEDIUM STATIC
MODEL C AIR HANDLING UNITS

PART NUMBER	DESCRIPTION	AH-12	AH M12	AH-22	AH M22	AH-32	AH M32	AH-40	AH M40	AH-48	AH M48	AH-64	AH M64	AH-80	AH M80	AH-100	AH M100	AH-120	AH M120	AH-150	AH M150	AH-180	AH M180	AH-240	AH M240	AH-320	AH M320
A320366	Shaft	1	1																								
A320367	Shaft			1	1																						
A354272	Shaft					1																					
A378639	Shaft						1																				
A354263	Shaft							1	1																		
A372655	Shaft									1																	
A377627	Shaft										1																
A372646	Shaft											1															
A377617	Shaft												1														
A354258	Shaft													1													
A372229	Shaft														1												
A354212	Shaft															1											
A359481	Shaft																1										
A354029	Shaft																	1									
A372231	Shaft																		1								
A320375	Shaft																			1							
A377580	Shaft																				1						
A354361	Shaft																					1					
A356551	Shaft																						1				
A320377	Shaft																							1			
A358696	Shaft																								1		
A320378	Shaft																									1	
A360024	Shaft																										1
E218029	Bearing	2	2	2		2																					
E218118	Bearing				2		2	2	2	2	2	2	4	2	4	2	4										
E218104	Bearing																	2	4	2	4						
E719061	Bearing																					2	4	2	4	2	4
B455054-013	Blower Wheel	1																									
B455054-014	Blower Wheel		1																								
B455054-004	Blower Wheel			1		1																					
B455054-017	Blower Wheel				1						2																
B455054-007	Blower Wheel						1						2														
B455054-015	Blower Wheel							1						2		2											
B455054-018	Blower Wheel								1						2												
B455054-011	Blower Wheel									2		2															
B455054-009	Blower Wheel															2											

REPAIR PARTS LIST
HAH and VAH
LOW and MEDIUM STATIC
MODEL C AIR HANDLING UNITS

PART NUMBER	DESCRIPTION	AH-12	AH M12	AH-22	AH M22	AH-32	AH M32	AH-40	AH M40	AH-48	AH M48	AH-64	AH M64	AH-80	AH M80	AH-100	AH M100	AH-120	AH M120	AH-150	AH M150	AH-180	AH M180	AH-240	AH M240	AH-320	AH M320
B455054-016	Blower Wheel																2		2								
B455054-008	Blower Wheel																	2									
B455054-010	Blower Wheel																			2							
B455054-003	Blower Wheel																				2						
B455054-012	Blower Wheel																					2					
B455054-002	Blower Wheel																						2	2			
B455054-005	Blower Wheel																								2	2	
B354344	Blower Housing	1																									
B377700	Blower Housing		1																								
B354083	Blower Housing			1		1				2		2															
B356992	Blower Housing				1						2																
B368673	Blower Housing						1						2														
B354077	Blower Housing							1						2		2	2										
B375153	Blower Housing								1																		
B374406	Blower Housing																				2						
C354023	Blower Housing																2		2	2							
C376536	Blower Housing																	2									
C354319	Blower Housing																				2						
C373549	Blower Housing																					2					
D354325	Blower Housing																						2	2			
D354339	Blower Housing																								2	2	

NOTES:
1. When ordering drives or motors from Dunham-Bush, Inc., specify unit model and serial number and complete name plate data on the motor.
2. Replacement filters are listed by filter type and section style on the latest issue of Form 66002.

Exhibit B-2

FORM NO. 2505B

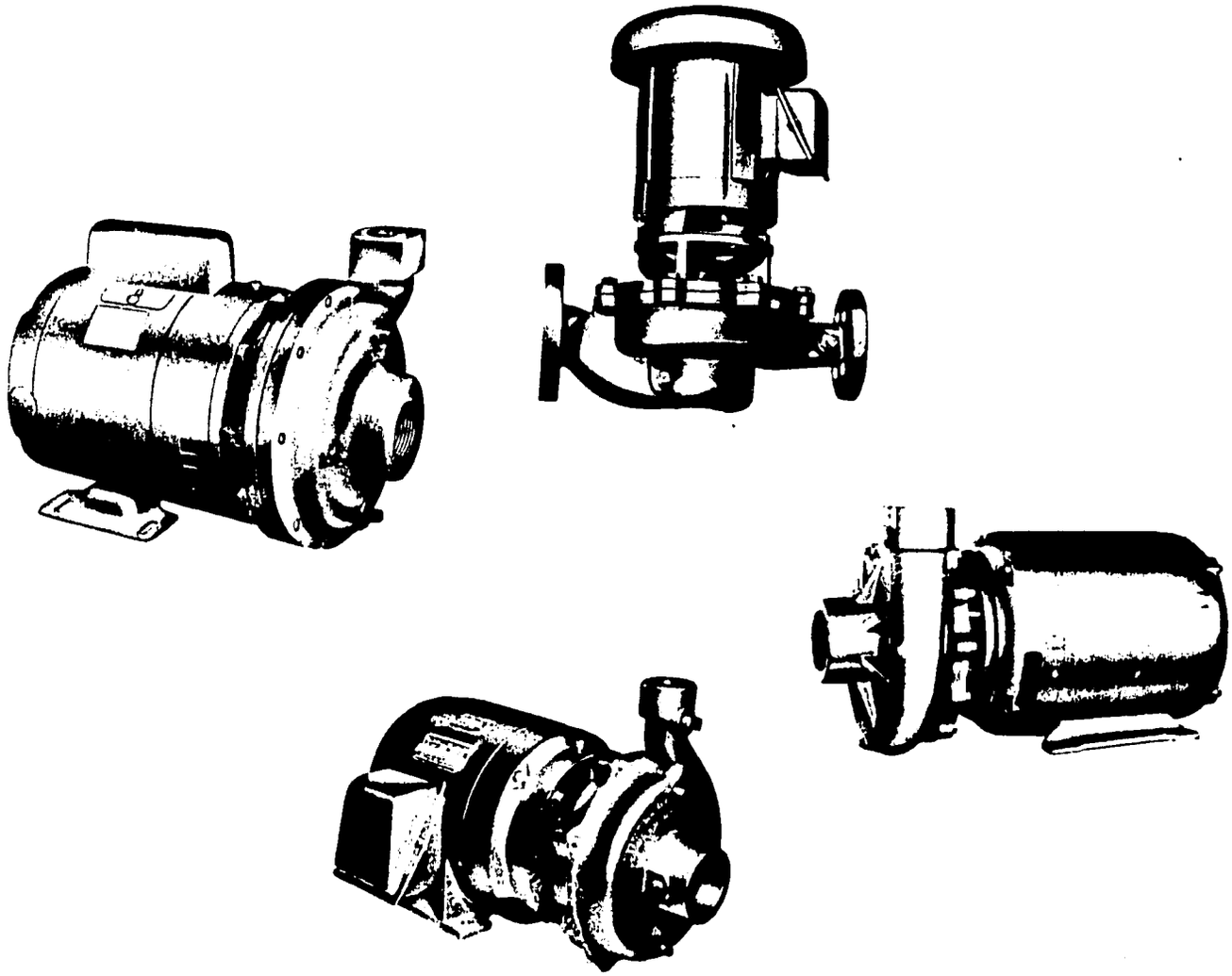

DUNHAM-BUSH

CENTRIFUGAL PUMPS
TYPE A5, A7, A9 AND PM7

PARTS SELECTION LIST

INDEX

	Pg.
NOMENCLATURE	1
ORDERING PROCEDURE	1
A5 PUMPS	
1/3 HP, 1/2 HP AND 3/4 HP	2
1 HP, 1-1/2 HP AND 2 HP	3
A9 PUMPS AND PARTS LIST	
1/2 HP, 3/4 HP AND 1 HP	**4**
1 1/2 HP	**5**
2 HP	**6–7**
3 HP	**8**
5 HP	**9**
7 1/2 HP	**10**
10 HP AND 15 HP	11
SERIES A A9 PUMPS	
1/2 HP, 3/4 HP AND 1 HP	12
1-1/2 HP	13
2 HP	14
3 HP	15
5 HP	16
7-1/2 HP	17
10 AND 15 HP	18
A7 PUMPS	
3/4", 1-1/4" AND 1-1/2" DISCHARGE	19
2" AND 2-1/2" DISCHARGE	20
PM7 PUMPS	
1", 1-1/4" AND 1-1/2" DISCHARGE	21
2" AND 2-1/2" DISCHARGE	22
A7A PUMPS	
3/4", 1-1/4 " AND 1-1/2" DISCHARGE	23
PM7A PUMPS	
1", 1-1/4" AND 1-1/2" DISCHARGE	24

DUNHAM-BUSH RESERVES THE RIGHT TO MAKE CHANGES IN SPECIFICATIONS AND DESIGN WITHOUT NOTICE.

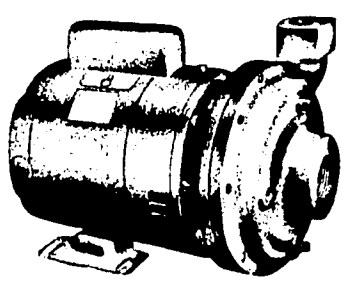

TYPE A5 PUMP

TYPE A7A AND A7 PUMPS

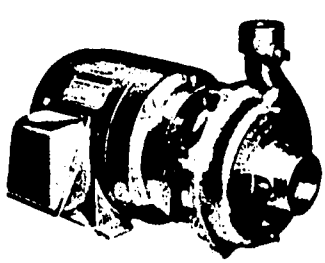

TYPE A9 PUMP

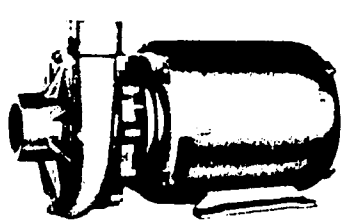

TYPE PM7 AND PM7A PUMPS

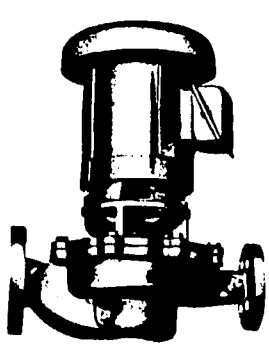

161

NOMENCLATURE

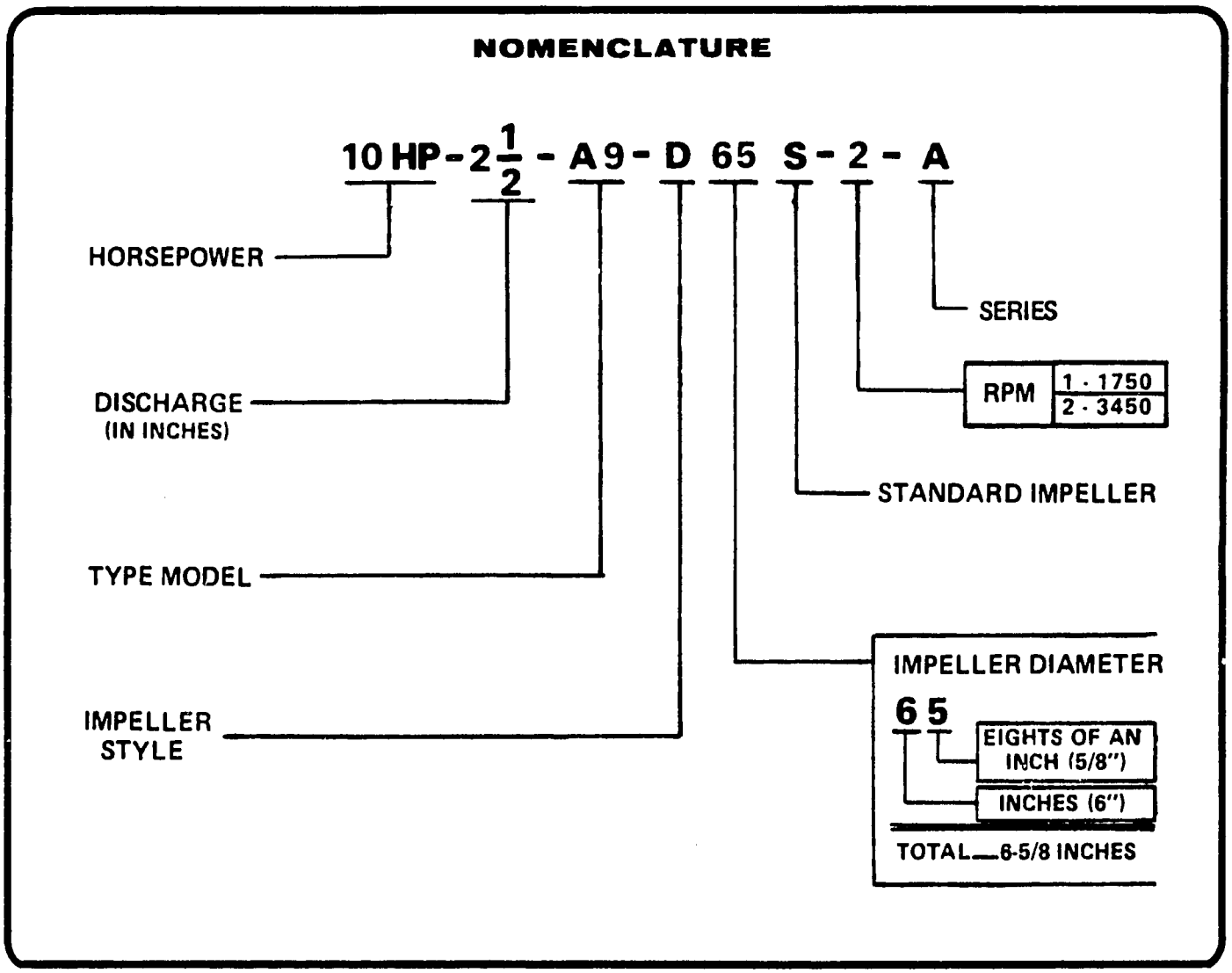

ORDERING PROCEDURE

1. Complete part number and description is required when ordering.
2. When a part number is not known or shown in the parts catalog, the complete model and serial number of the unit on which the part is to be used must be given.
3. Send all orders to:

   DUNHAM-BUSH, INC., PARTS DEPT.
   811 E. MAIN ST.
   MARSHALLTOWN, IOWA, 50158

4. Prices can be found in the latest revision of Form 17448 and are for one item or kit as applicable.
5. Minimum billing is $25.00.
6. All prices are subject to federal, state, local or other taxes which may be applicable.
7. All orders requiring **special handling** will have a surcharge of $25.00 or the actual cost of this requirement whichever is greater.
8. Dunham-Bush reserves the right to substitute parts if they are interchangeable with those ordered. The invoice will reflect the cost of the actual part shipped.

9 Refer to latest revision of Form 17448 for prices.

10 Refer to the latest revision of Form 1278 for terms of sale.

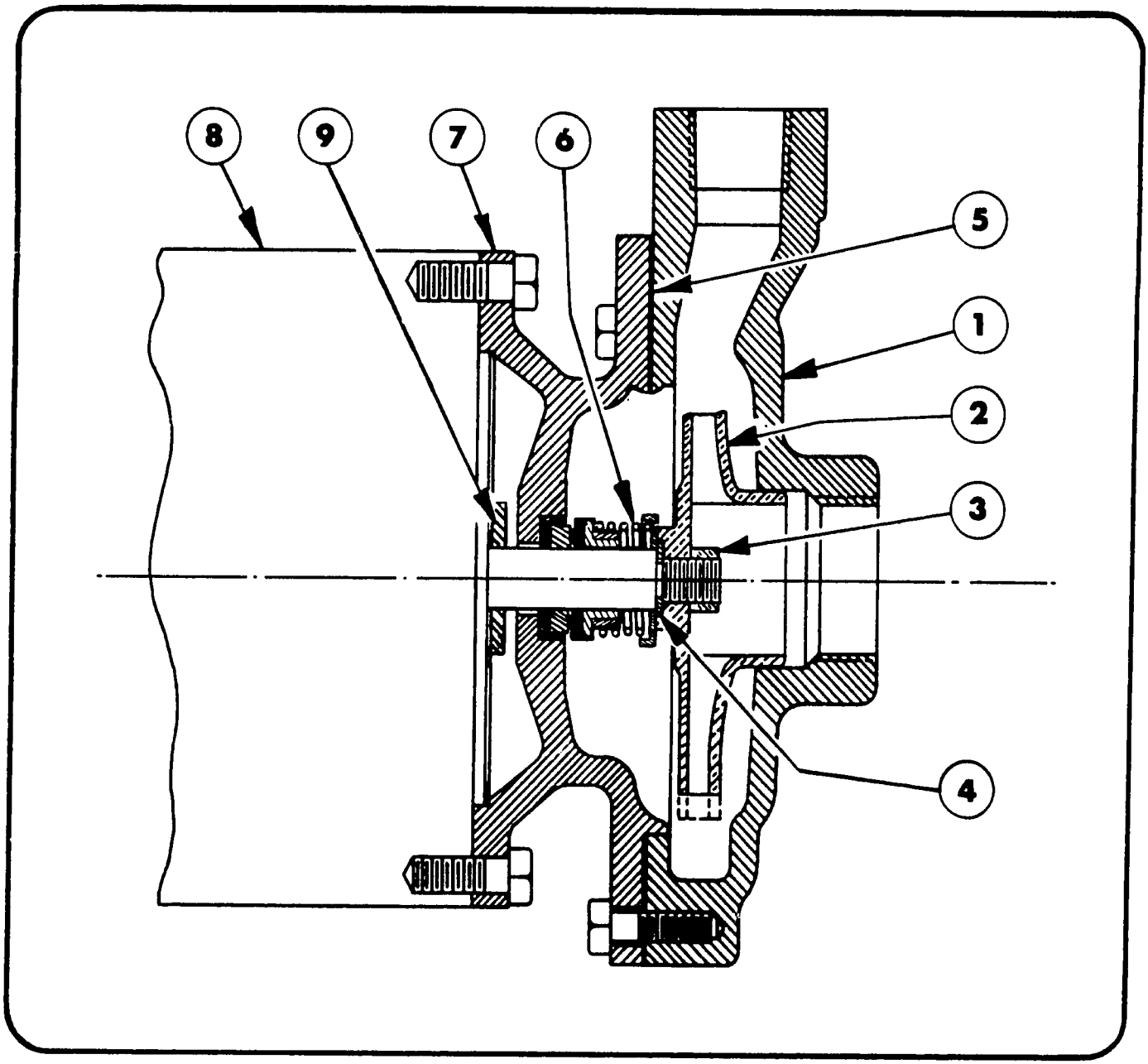

A5 PUMP AND PARTS LIST

⅓ HP, ½ HP AND ¾ HP

	PART NUMBER AND DESCRIPTION	1/3 HP 1" 1φ & 3φ A5C2	1/3 HP 1 1/2" 1φ & 3φ A5C2	1/2 HP 1" 1φ & 3φ A5C2	1/2 HP 1 1/2" 1φ & 3φ A5C2	3/4 HP 3/4" 1φ & 3φ A5C2	3/4 HP 1 1/2" 1φ & 3φ A5C2
1	CASE (CAST IRON) CASE (BRONZE)	E6046 E6078	E6048 E6080	E6045 E6078	E6048 E6080	E6041 E6077	E6048 E6080
2	IMPELLER	D5197x 3 15/16"	D5203x 3 1/4"	D5197x 4 5/16"	D5203x 3 5/8"	D5193x 4 5/16"	D5203x 4 3/32"
3	NUT - IMPELLER	P-116	P-116	P-116	P-116	P-116	P-116
4	WASHER	C8709	C8709	C8709	C8709	C8709	C8709
5	GASKET-CASE *	D5352	D5352	D5352	D5352	D5352	D5352
6	SEAL-SHAFT *	472	472	472	472	472	472
7	HEAD (CAST IRON) HEAD (BRONZE)	E6042 E6081	E6042 E6081	E6042 E6081	E6042 E6081	E6042 E6081	E6042 E6081
8	MOTOR	Contact Dunham-Bush, Inc., Marshalltown, Iowa					
9	SLINGER	C8854	C8854	C8854	C8854	C8854	C8854

NOTES: 1. NON-STANDARD pump parts are not shown. When ordering repair parts, refer to page 1 of this catalog.
2. * = These parts are required when replacing shaft seal.

16

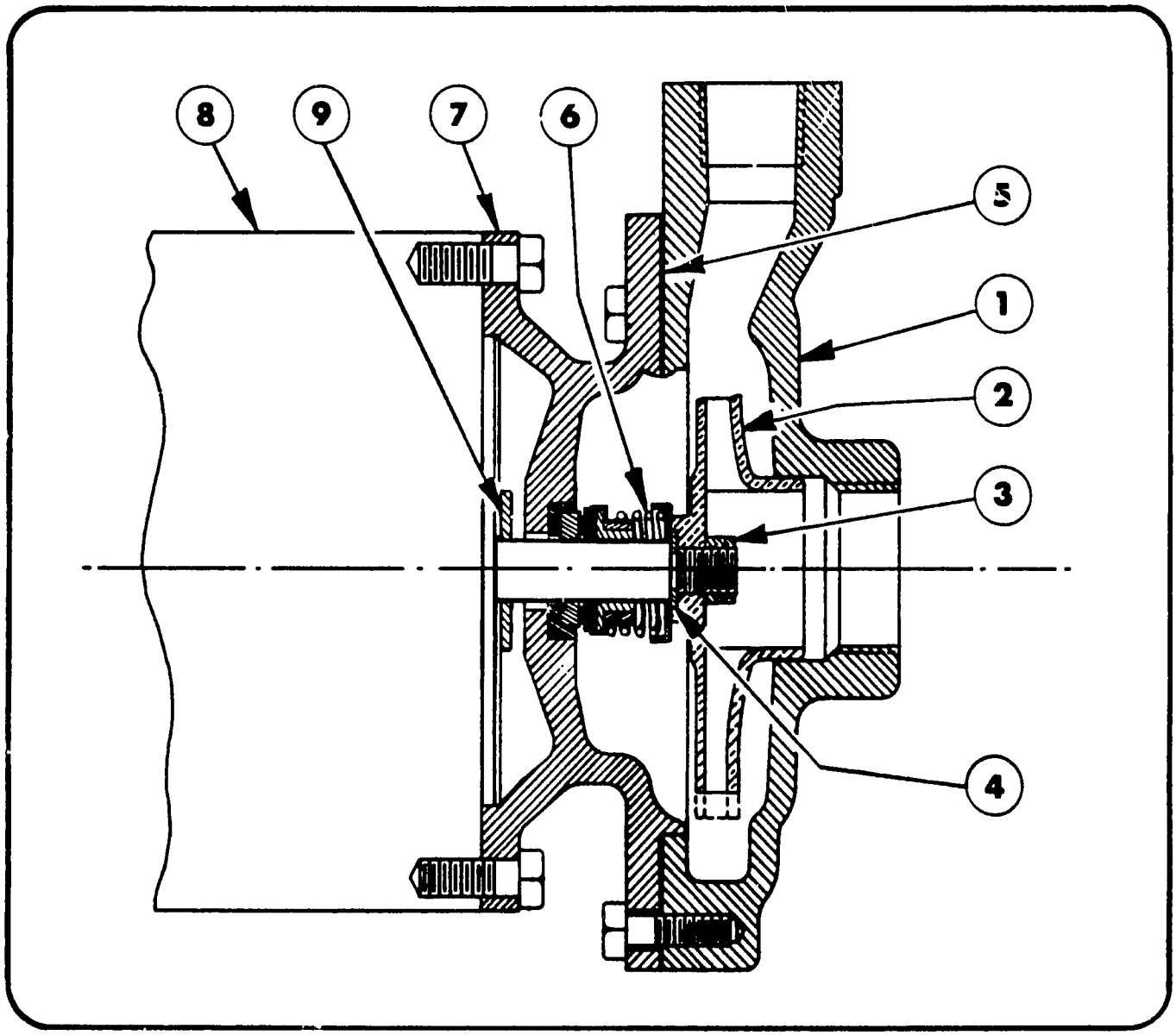

A5 PUMP AND PARTS LIST

1 HP, 1½ HP AND 2 HP

PART NUMBER AND DESCRIPTION		1 HP ¾" 1φ & 3φ A5A2	1 HP 1½" 1φ & 3φ A5C2	1½ HP ¾" 1φ & 3φ A5A2	1½ HP 1¼" 1φ & 3φ A5B2	2 HP 1" 1φ & 3φ A5A2	2 HP 1¼" 1φ & 3φ A5B2	2 HP 1½" 1φ & 3φ A5B2
1	CASE (CAST IRON) CASE (BRONZE)	E6041 E6077	E6048 E6080	E6041 E6077	E6047 E6079	E6046 E6078	E6047 E6079	E6048 E6080
2	IMPELLER	D5193x 4 9/16"	D5203x 4 5/16"	D5193x 5"	D5199x 4 1/8"	D5195x 4 1/2"	D5199x 4 1/2"	D5202x 4 1/8"
3	NUT–IMPELLER	P-116	P-116	P-116	P-116	P-116	P-116	P-116
4	WASHER	C8709	C8709	C8709	C8709	C8709	C8709	C8709
5	GASKET–CASE *	D5352	D5352	D5352	D5352	D5352	D5352	D5352
6	SEAL–SHAFT *	472	472	472	472	472	472	472
7	HEAD (CAST IRON) HEAD (BRONZE)	E6042 E6081	E6042 E6081	E6042 E6081	E6042 E6081	E6042 E6081	E6042 E6081	E6042 E6081
8	MOTOR	Contact Dunham-Bush, Inc., Marshalltown, Iowa						
9	SLINGER	C8854	C8854	C8854	C8854	C8854	C8854	C8854

NOTES: 1. NON-STANDARD pump parts are not shown. When ordering repair parts, refer to page 1 of this catalog.
2. * = These parts are required when replacing shaft seal.

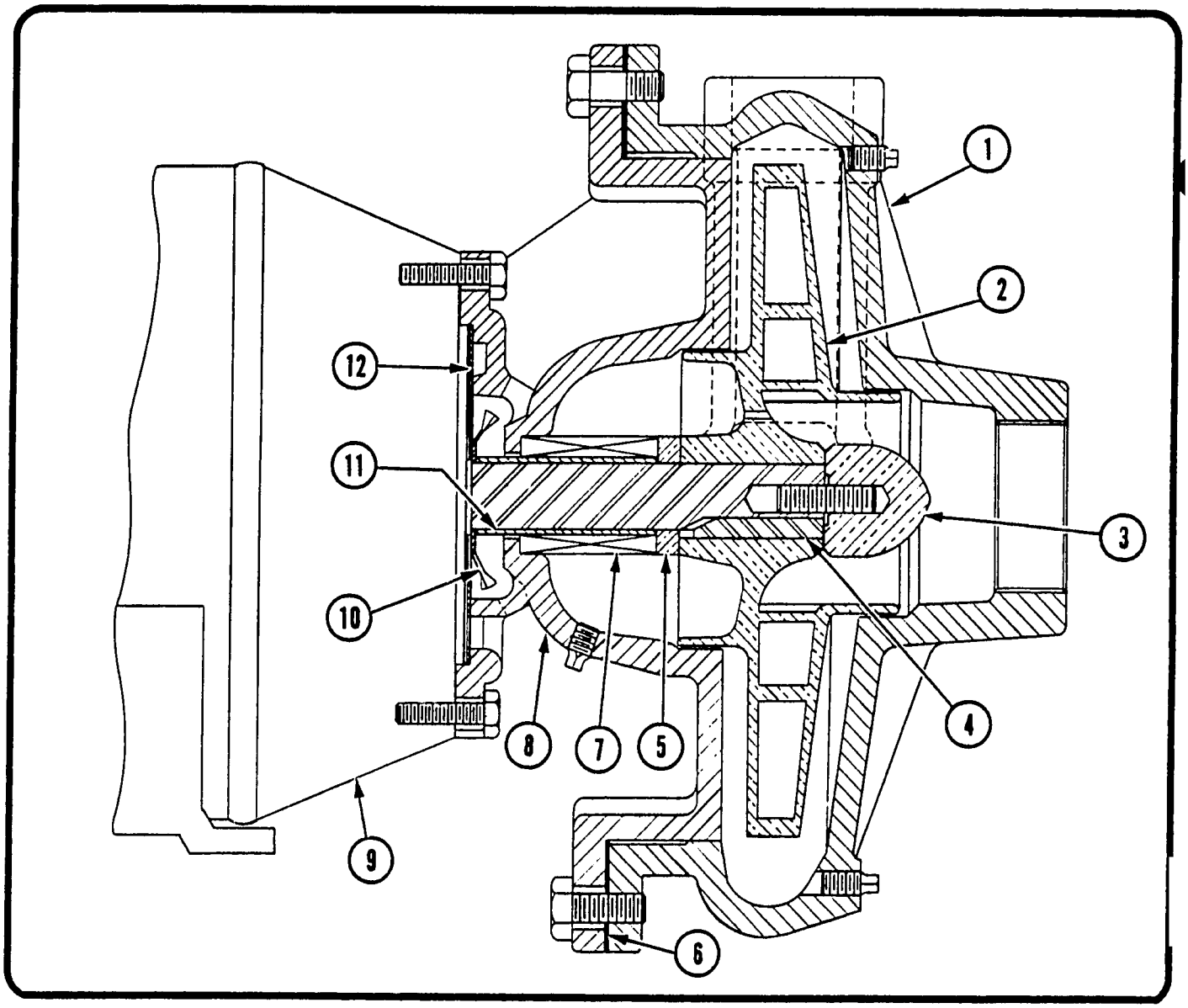

A9 PUMP AND PARTS LIST—½ HP, ¾ HP AND 1 HP

	PART	½ HP 1" 1ϕ & 3ϕ A9C1	¾ HP 1" 1ϕ & 3ϕ A9C1	¾ HP 1¼" 1ϕ & 3ϕ A9D1	1 HP 1" 1ϕ & 3ϕ A9C1	1 HP 1¼" 1ϕ & 3ϕ A9D1	1 HP 2" 1ϕ & 3ϕ A9D1
1	*CASE (CAST IRON) *CASE (BRONZE)	F541 D2-76	F541 D2-76	F540 D2-74	F541 D2-76	F540 D2-74	F544 D2-80
2	IMPELLER	C2-73x 6 1/16"	C2-73x 6¾"	E6181x 4 13/16"	C2-73x 7¾"	E6181x 5 15/32"	E6188x 5⅜"
3	STUD & NUT ASSEMBLY	C10035 C8938	C10035 C8938	C10035 C8938	C10035 C8938	C10035 C8938	C10035 C8938
4	KEY	C10025	C10025	C10025	C10025	C10025	C10025
5	SEAL SPACER	C10060	C10060	C10060	C10060	C10060	C10060
6	GASKET	D5450	D5450	D5450	D5450	D5450	D5450
7	SHAFT SEAL	860	860	860	860	860	860
8	*HEAD (CAST IRON) *HEAD (BRONZE)	F539 D2-77	F539 D2-77	F539 D2-77	F539 D2-77	F539 D2-77	F539 D2-77
9	MOTOR	Contact Dunham-Bush, Inc., Marshalltown, Iowa					
10	SLINGER	C10037	C10037	C10037	C10037	C10037	C10037
11	SLEEVE	C10062	C10062	C10062	C10062	C10062	C10062
12	SHIELD	C8958	C8958	C8958	C8958	C8958	C8958

NOTE NON-STANDARD repair parts are not shown, when ordering furnish serial number. Complete ordering instructions are found on Page 1.

* When replacing item No. 8, head, before serial number 6605, item No. 1, case, must also be replaced.

165

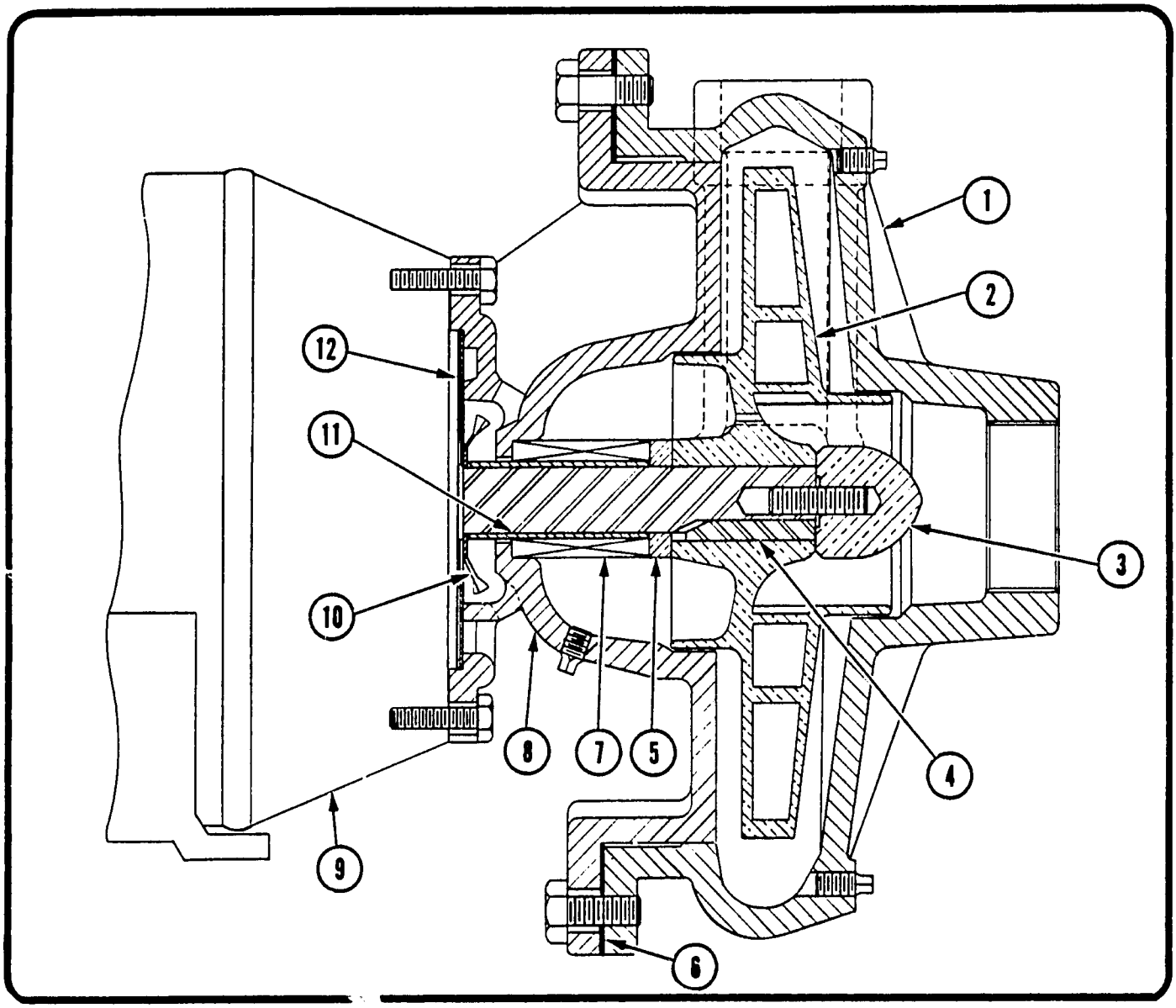

A9 PUMP AND PARTS LIST-1½ HP

	PART	1½ HP 1" 1ϕ & 3ϕ A9C1	1½ HP 1¼" 1ϕ & 3ϕ A9D1	1½ HP 2" 1ϕ & 3ϕ A9D1	1½ HP 2½" 1ϕ & 3ϕ A9E2	1½ HP 2½" 1ϕ & 3ϕ A9D1
1	*CASE (CAST IRON) *CASE (BRONZE)	F541 D2-76	F540 D2-74	F544 D2-80	F545 D2-79	F545 D2-79
2	IMPELLER	C2-73x 8 7/16"	E6181x 6 3/8"	E6188x 5 29/32"	E6184x 3 13/16"	E6204x 5 21/32"
3	STUD & NUT ASSEMBLY	C10035 C8938	C10035 C8938	C10035 C8938	C10035 C8938	C10035 C8938
4	KEY	C10025	C10025	C10025	C10025	C10025
5	SEAL SPACER	C10060	C10060	C10060	C10060	C10060
6	GASKET	D5450	D5450	D5450	D5450	D5450
7	SHAFT SEAL	860	860	860	860	860
8	*HEAD (CAST IRON) *HEAD (BRONZE)	F539 D2-77	F539 D2-77	F539 D2-77	F539 D2-77	F539 D2-77
9	MOTOR	Contact Dunham-Bush, Inc., Marshalltown, Iowa				
10	SLINGER	C10037	C10037	C10037	C10037	C10037
11	SLEEVE	C10062	C10062	C10062	C10062	C10062
12	SHIELD	C8958	C8958	C8958	C8958	C8958

NOTE: NON-STANDARD repair parts are not shown, when ordering furnish serial number. Complete ordering instructions are found on Page 1.

*When ordering case for 2½" A9E, also show A2-51 Adapter, which must be pressed in the case.

* When replacing item No. 8, head, before serial number 6605, item No. 1, case, must also be replaced.

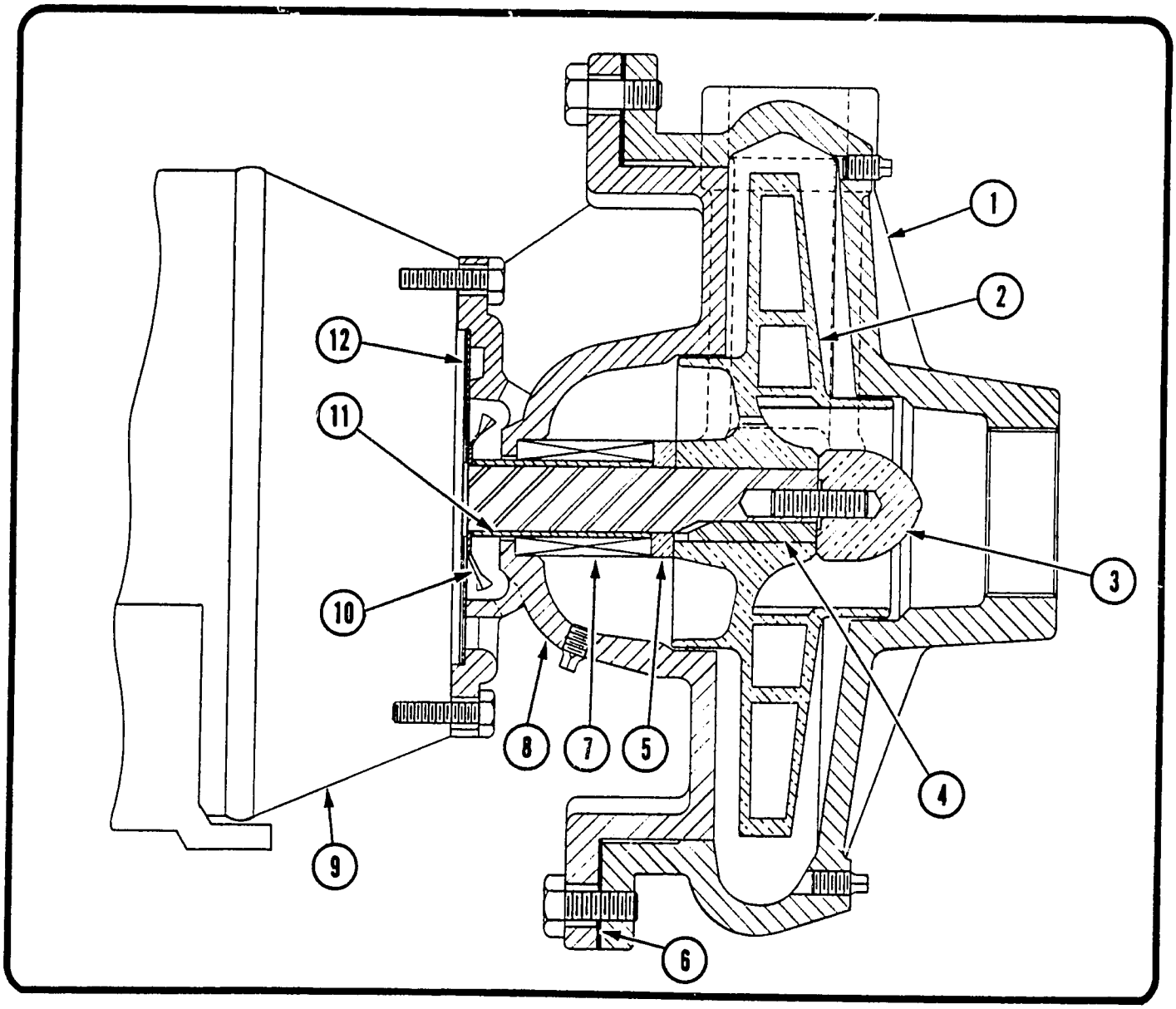

A9 PUMP AND PARTS LIST – 2 HP

	PART	2 HP 1" 1ϕ A9C1	2 HP 1" 3ϕ A9C1	2 HP 1¼" 1ϕ A9D1	2 HP 1¼" 3ϕ A9D1
1	*CASE (CAST IRON) *CASE (BRONZE)	F541 D2-76	F541 D2-76	F540 D2-74	F540 D2-74
2	IMPELLER	C2-73x 9"	C2x73x 9"	E6181x 7 3/16"	E6181x 7 3/16"
3	STUD & NUT ASSEMBLY	C10035 C8938	C10035 C8938	C10035 C8938	C10035 C8938
4	KEY	C10025	C10025	C10025	C10025
5	SEAL SPACER	C10061	C10060	C10061	C10060
6	GASKET	D5450	D5450	D5450	D5450
7	SHAFT SEAL	861	860	861	860
8	*HEAD (CAST IRON) *HEAD (BRONZE)	F546 D2-77	F539 D2-77	F546 D2-78	F539 D2-77
9	MOTOR	Contact Dunham-Bush, Inc., Marshalltown, Iowa			
10	SLINGER	C10038	C10037	C10038	C10037
11	SLEEVE	C10063	C10062	C10063	C10062
12	SHIELD	D5478	C8958	D5478	C8958

NOTE: NON-STANDARD repair parts are not shown, when ordering furnish serial number. Complete ordering instructions are found on Page 1.

*When replacing item No. 8, head, before serial number 6605, item No. 1, case, must also be replaced.

167

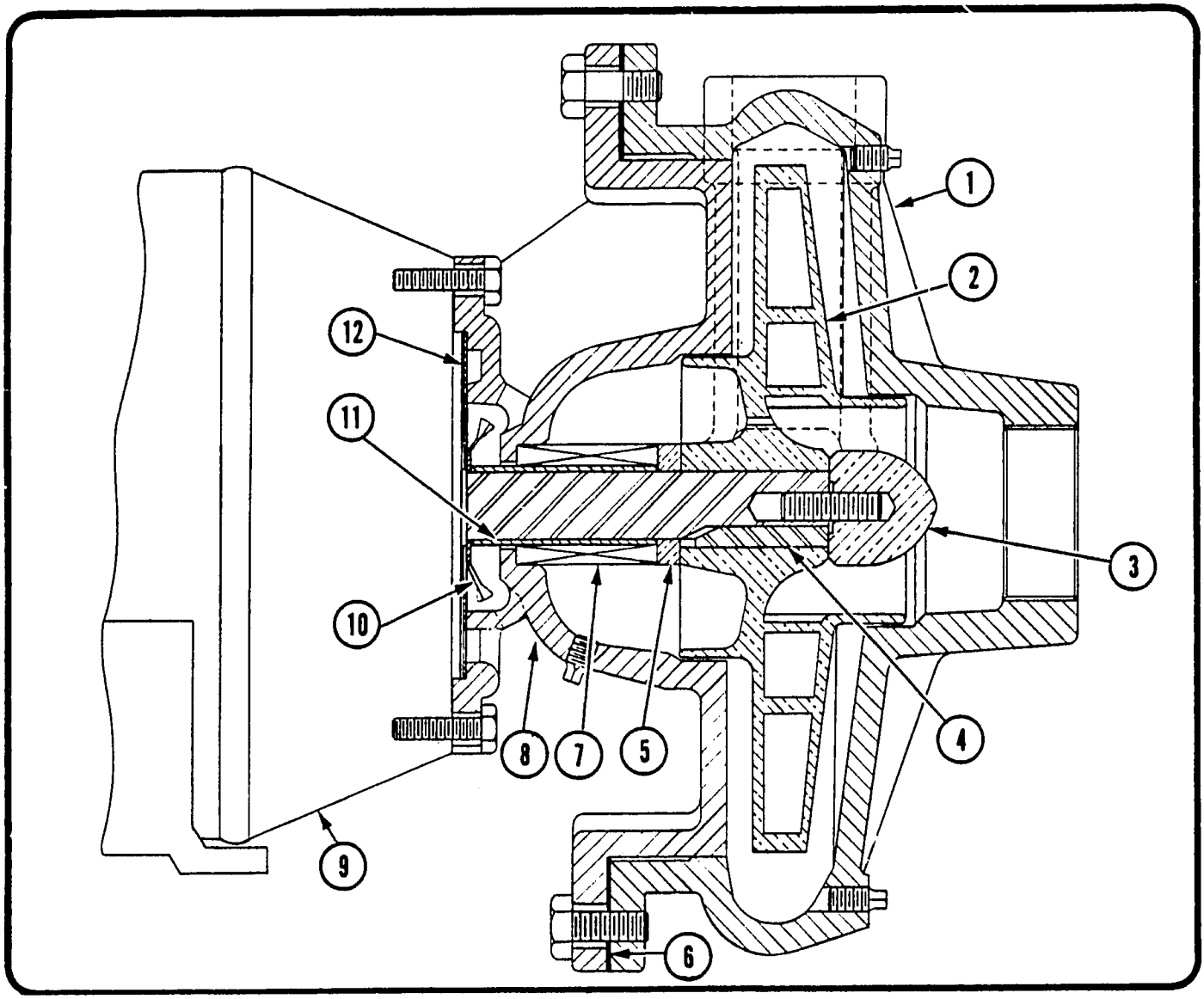

A9 PUMP AND PARTS LIST — 2 HP

PART		2 HP 2" 1ϕ A9D1	2 HP 2" 3ϕ A9D1	2 HP 2½" 1ϕ A9D1	2 HP 2½" 3ϕ A9D1	2 HP 2½" 1ϕ & 3ϕ A9E2
1	*CASE (CAST IRON) *CASE (BRONZE)	F544 D2-80	F544 D2-80	F545 D2-79	F545 D2-79	F545 D2-79
2	IMPELLER	E6188x 6½"	E6188x 6½"	E6204x 6⅛"	E6204x 6⅛"	E6184x 3 15/16"
3	STUD & NUT ASSEMBLY	C10035 C8938	C10035 C8938	C10035 C8938	C10035 C8938	C10035 C8938
4	KEY	C10025	C10025	C10025	C10025	C10025
5	SEAL SPACER	C10061	C10060	C10061	C10060	C10060
6	GASKET	D5450	D5450	D5450	D5450	D5450
7	SHAFT SEAL	861	860	861	860	860
8	*HEAD (CAST IRON) *HEAD (BRONZE)	F546 D2-78	F539 D2-77	F546 D2-79	F539 D2-79	F539 D2-77
9	MOTOR	Contact Dunham-Bush, Inc., Marshalltown, Iowa				
10	SLINGER	C10038	C10037	C10038	C10037	C10037
11	SLEEVE	C10063	C10062	C10063	C10062	C10062
12	SHIELD	D5478	C8958	D5478	C8958	C8958

NOTE: NON-STANDARD repair parts are not shown, when ordering furnish serial number. Complete ordering instructions are found on Page 1.
*When ordering case for 2½" A9E, also show A2-51 Adapter, which must be pressed in the case.
When replacing item No. 8, head, before serial number 6605, item No. 1, case, must also be replaced.

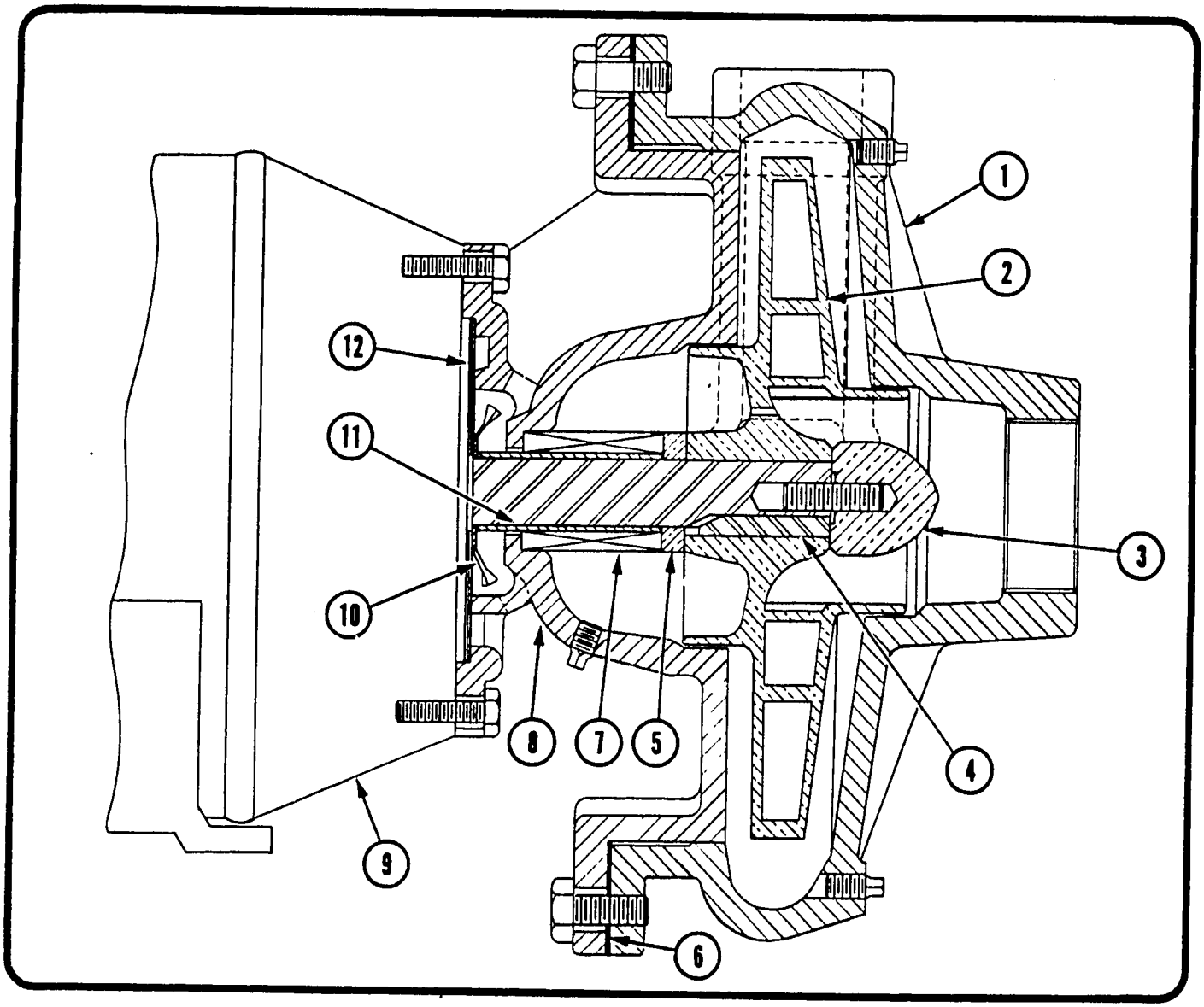

A9 PUMP AND PARTS LIST – 3 HP

	PART	3 HP 1" 3ϕ A9D2	3 HP 1" 3ϕ A9C2	3 HP 1¼" 3ϕ A9D1	3 HP 1¼" 3ϕ A9D2	3 HP 2" 3ϕ A9D1	3 HP 2½" 3ϕ A9D1	3 HP 2½" 3ϕ A9E2
1	*CASE (CAST IRON) *CASE (BRONZE)	F541 D2-76	F541 D2-76	F540 D2-74	F540 D2-74	F544 D2-80	F545 D2-79	F545 D2-79
2	IMPELLER	E6141x 5¼"	C2-73x 6 1/16"	E6181x 8¼"	E6181x 4 7/16"	E6188x 7 1/16"	E6204x 6¾"	E6184x 4¼"
3	STUD & NUT ASSEMBLY	C10035 C8938	C10035 C8938	C10035 C8938	C10035 C8938	C10035 C8938	C10035 C8938	C10035 C8938
4	KEY	C10025	C10025	C10025	C10025	C10025	C10025	C10025
5	SEAL SPACER	C10060	C10060	C10061	C10060	C10061	C10061	C10060
6	GASKET	D5450	D5450	D5450	D5450	D5450	D5450	D5450
7	SHAFT SEAL	860	860	861	860	861	861	860
8	*HEAD (CAST IRON) *HEAD (BRONZE)	F539 D2-77	F539 D2-77	F546 D2-78	F539 D2-77	F546 D2-78	F546 D2-78	F539 D2-77
9	MOTOR	Contact Dunham-Bush, Inc., Marshalltown, Iowa						
10	SLINGER	C10037	C10037	C10038	C10037	C10038	C10038	C10037
11	SLEEVE	C10062	C10062	C10063	C10062	C10063	C10063	C10062
12	SHIELD	C8958	C8958	D5478	C8958	D5478	D5478	C8958

NOTE: NON-STANDARD repair parts are not shown, when ordering furnish serial number. Complete ordering instructions are found on Page 1.
*When replacing item No. 8, head, before serial number 6605, item No. 1, case, must also be replaced.

169

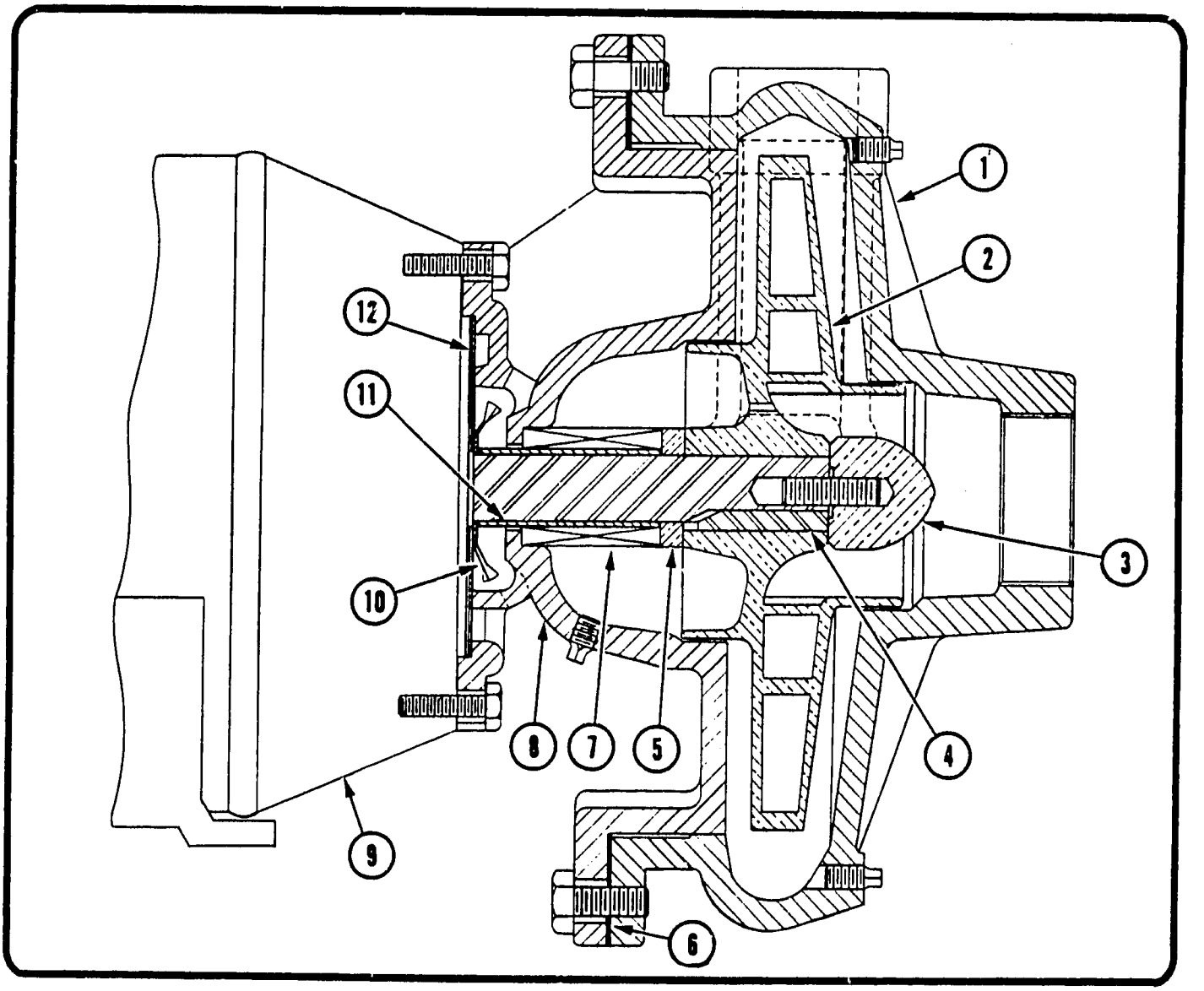

A9 PUMP AND PARTS LIST — 5 HP

PART	5 HP 1" 3ϕ A9C2	5 HP 1" 3ϕ A9D2	5 HP 1¼" 3ϕ A9D2	5 HP 2" 3ϕ A9D1	5 HP 2" 3ϕ A9D2	5 HP 2½" 3ϕ A9D1	5 HP 2½" 3ϕ A9D2
1 *CASE (CAST IRON) *CASE (BRONZE)	F541 D2-76	F541 D2-76	F540 D2-74	F544 D2-80	F544 D2-80	F545 D2-79	F545 D2-79
2 IMPELLER	C2-73x 6⅝"	E6141x 5⅞"	E6181x 5 13/32"	E6188x 8⅞"	E6188x 4 13/16"	E6204x 7 13/16"	E6204x 4¾"
3 STUD & NUT ASSEMBLY	C10035 C8938	C10035 C8938	C10035 C8938	C10035 C8938	C10035 C8938	C10035 C8938	C10035 A2-672
4 KEY	C10025	C10025	C10025	C10025	C10025	C10025	C10025
5 SEAL SPACER	C10061	C10061	C10061	C10061	C10061	C10061	C10061
6 GASKET	D5450	D5450	D5450	D5450	D5450	D5450	D5450
7 SHAFT SEAL	861	861	861	861	861	861	861
8 *HEAD (CAST IRON) *HEAD (BRONZE)	F546 D2-78	F546 D2-78	F546 D2-78	F546 D2-78	F546 D2-78	F546 D2-78	F546 D2-78
9 MOTOR	Contact Dunham-Bush, Inc., Marshalltown, Iowa						
10 SLINGER	C10038	C10038	C10038	C10038	C10038	C10038	C10038
11 SLEEVE	C10063	C10063	C10063	C10063	C10063	C10063	C10063
12 SHIELD	D5478	D5478	D5478	D5478	D5478	D5478	D5478

NOTE: NON-STANDARD repair parts are not shown, when ordering furnish serial number. Complete ordering instructions are found on Page 1.

When replacing item No. 8, head, before serial number 6605, item No. 1, case, must also be replaced.

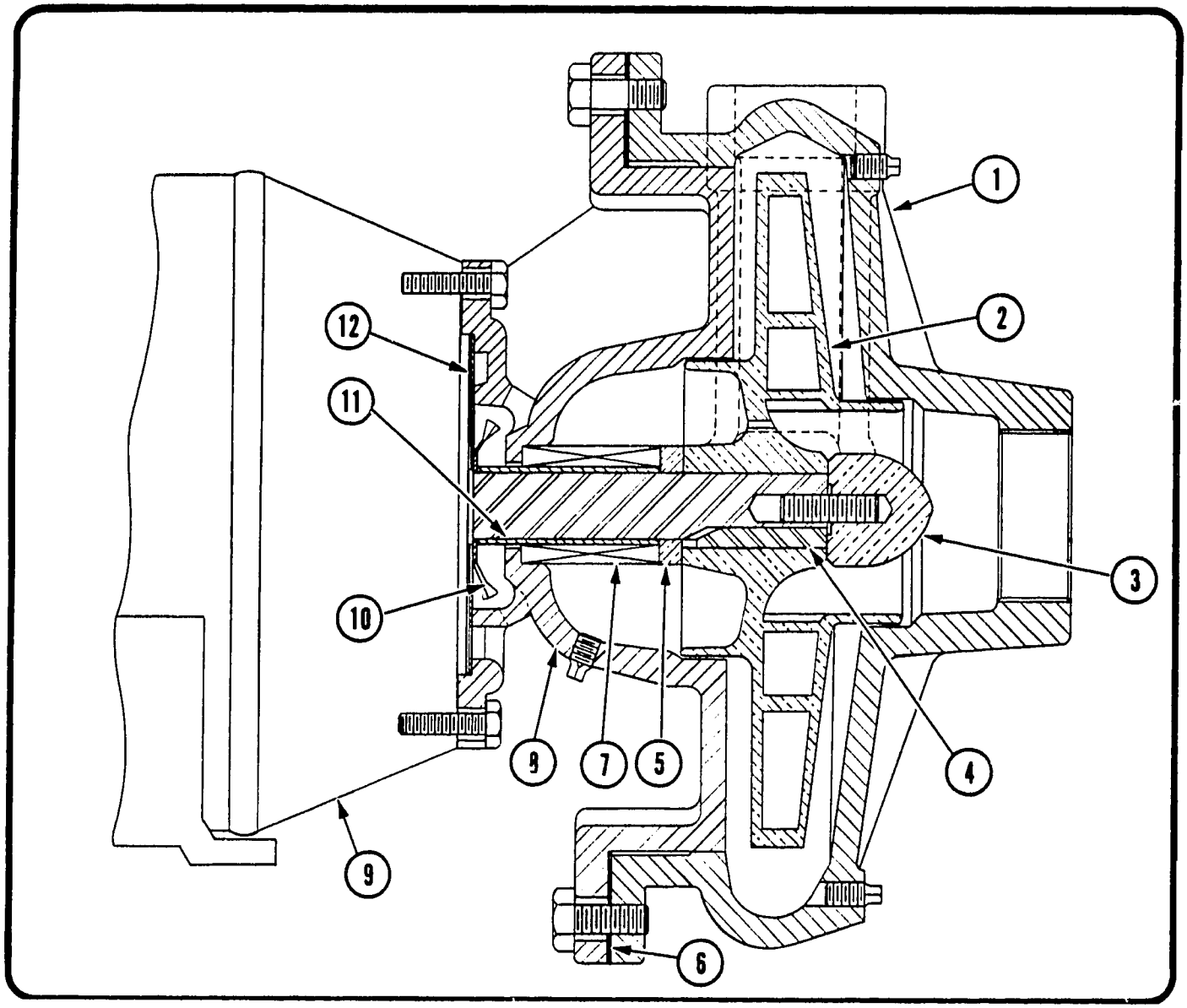

A9 PUMP AND PARTS LIST - 7½ HP

	PART	7½ HP 1¼" 3ϕ A9D2	7½ HP 2" 3ϕ A9D2	7½ HP 2½" 3ϕ A9D1	7½ HP 2½" 3ϕ A9D2
1	*CASE (CAST IRON) *CASE (BRONZE)	F540 D2-74	F544 D2-80	F545 D2-79	F545 D2-79
2	IMPELLER	E6181x 5 13/16"	E6188x 5 9/16"	E6204x 9"	E6204x 5 9/16"
3	STUD & NUT ASSEMBLY	C10035 C8938	C10035 A2-672	C10035 C8938	C10035 A2-672
4	KEY	C10025	C10025	C10025	C10025
5	SEAL SPACER	C10061	C10061	C10061	C10061
6	GASKET	D5450	D5450	D5450	D5450
7	SHAFT SEAL	861	861	861	861
8	*HEAD (CAST IRON) *HEAD (BRONZE)	F546 D2-78	F546 D2-78	F546 D2-78	F546 D2-78
9	MOTOR	Contact Dunham-Bush, Inc., Marshalltown, Iowa			
10	SLINGER	C10038	C10038	C10038	C10038
11	SLEEVE	C10063	C10063	C10063	C10063
12	SHIELD	D5478	D5478	D5478	D5478

NOTE: NON-STANDARD repair parts are not shown, when ordering furnish serial number. Complete ordering instructions are found on Page 1.
*When replacing item No. 8, head, before serial number 6605, item No. 1, case, must also be replaced.

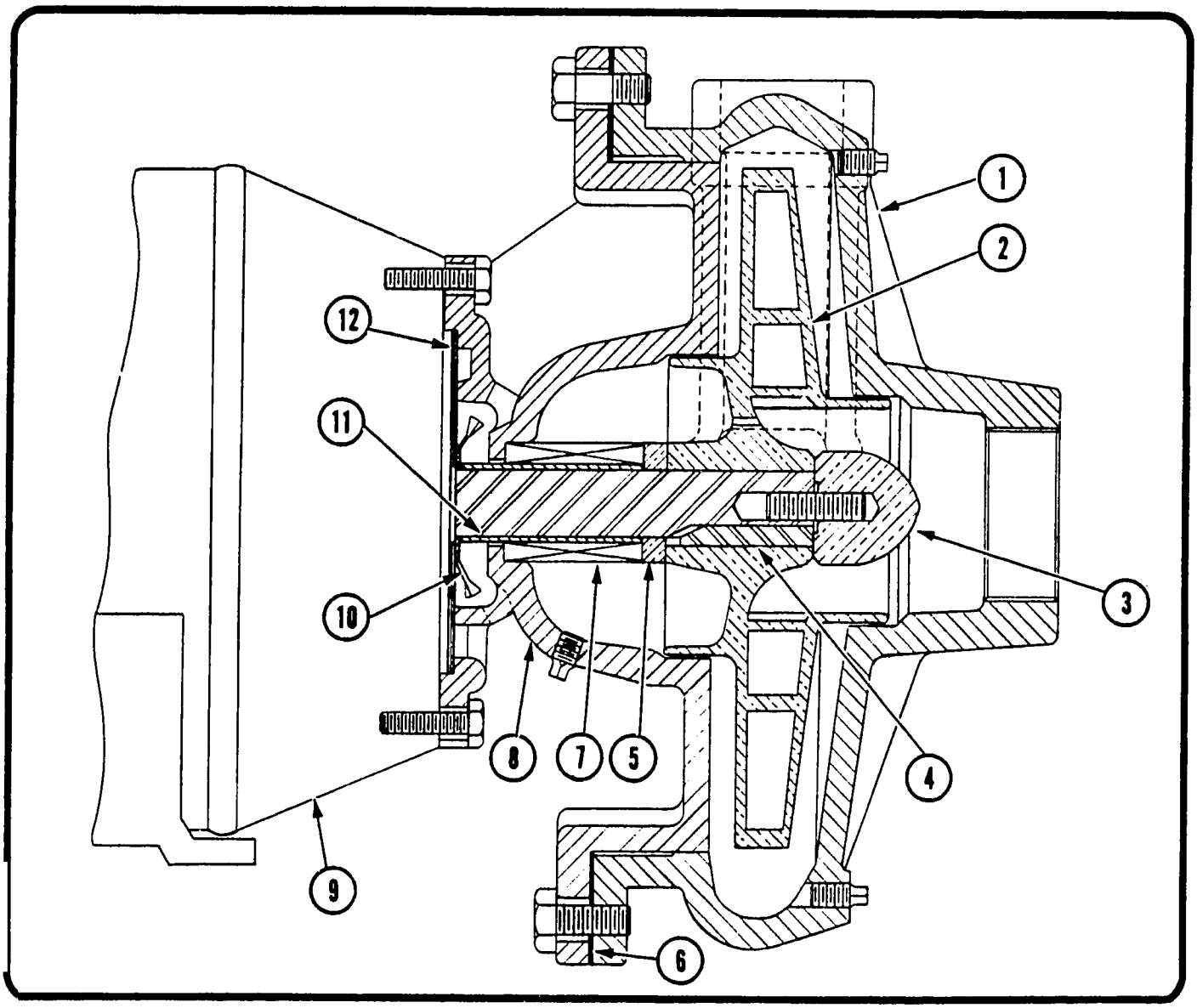

A9 PUMP AND PARTS LIST – 10 HP AND 15 HP

	PART	10 HP 1¼" 3ϕ A9D2	10 HP 2" 3ϕ A9D2	15 HP 2½" 3ϕ A9D2	15 HP 2" 3ϕ A9D2
1	*CASE (CAST IRON) *CASE (BRONZE)	F540 D2-74	F544 D2-80	F545 D2-79	F544 D2-80
2	IMPELLER	E6181x 6⅜"	E6188x 5²⁹⁄₃₂"	E6204x 5²¹⁄₃₂"	E6188x 6⁵⁄₁₆"
3	STUD & NUT ASSEMBLY	C10035 C8938	C10035 A2-672	C10035 A2-672	C10035 A2-672
4	KEY	C10025	C10025	C10025	C10025
5	SEAL SPACER	C10061	C10061	C10061	C10061
6	GASKET	D5450	D5450	D5450	D5450
7	SHAFT SEAL	861	861	861	861
8	*HEAD (CAST IRON) *HEAD (BRONZE)	F546 D2-78	F546 D2-78	F546 D2-78	F546 D2-78
9	MOTOR	Contact Dunham-Bush, Inc., Marshalltown, Iowa			
10	SLINGER	C10038	C10038	C10038	C10038
11	SLEEVE	C10063	C10063	C10063	C10063
12	SHIELD	D5478	D5478	D5478	D5478

NOTE: NON-STANDARD repair parts are not shown, when ordering furnish serial number. Complete ordering instructions are found on Page 1.
*When replacing item No. 8, head, before serial number 6605, item No. 1, case, must also be replaced.

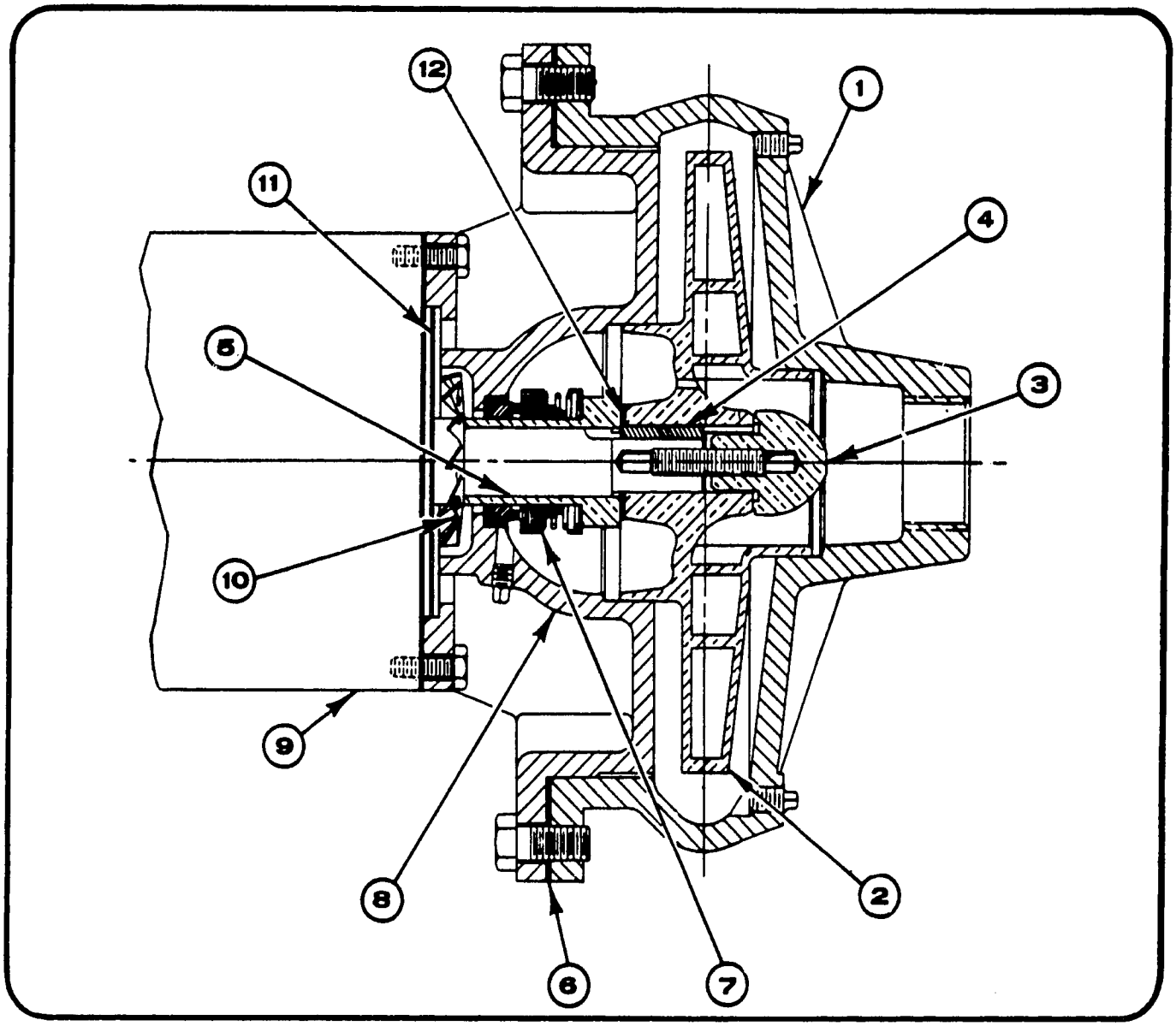

A9 PUMP AND PARTS LIST
SERIES A - ½ HP, ¾ HP AND 1 HP

	PART NUMBER AND DESCRIPTION	½ HP 1" 1φ & 3φ A9C1A	¾ HP 1" 1φ & 3φ A9C1A	¾ HP 1¼" 1φ & 3φ A9D1A	1 HP 1" 1φ & 3φ A9C1A	1 HP 1¼" 1φ & 3φ A9D1A	1 HP 2" 1φ & 3φ A9D1A
1	CASE (CAST IRON) CASE (BRONZE)	F541 D2-76	F541 D2-76	F540 D2-74	F541 D2-76	F540 D2-74	F544 D2-80
2	IMPELLER (BRONZE)	C2-3211X 6 1/16"	C2-3211X 6 3/4"	C2-3213X 4 15/16"	C2-3211X 7 5/16"	C2-3213X 5 15/16"	C2-3214X 5 3/8
3	STUD & NUT ASSEMBLY	C10035 A2-3898	C10035 A2-3898	C10035 A2-3898	C10035 A2-3898	C10035 A2-3898	C10035 A2-3898
4	KEY	C7763	C7763	C7763	C7763	C7763	C7763
5	SLEEVE *	A2-3905	A2-3905	A2-3905	A2-3905	A2-3905	A2-3905
6	GASKET *	D5450	D5450	D5450	D5450	D5450	D5450
7	SHAFT SEAL *	3179	3179	3179	3179	3179	3179
8	HEAD (CAST IRON) HEAD (BRONZE)	D2-1478 D2-1480	D2-1478 D2-1480	D2-1478 D2-1480	D2-1478 D2-1480	D2-1478 D2-1480	D2-1478 D2-1480
9	MOTOR	Contact Dunham-Bush, Inc., Marshalltown, Iowa					
10	SLINGER	C10038	C10038	C10038	C10038	C10038	C10038
11	SHIELD	C8958	C8958	C8958	C8958	C8958	C8958
12	GASKET *	A2-3020	A2-3020	A2-3020	A2-3020	A2-3020	A2-3020

NOTES: 1. NON-STANDARD pump parts are not shown. When ordering repair parts, refer to page 1 of this catalog.
2. * = These parts are required when replacing shaft seal.

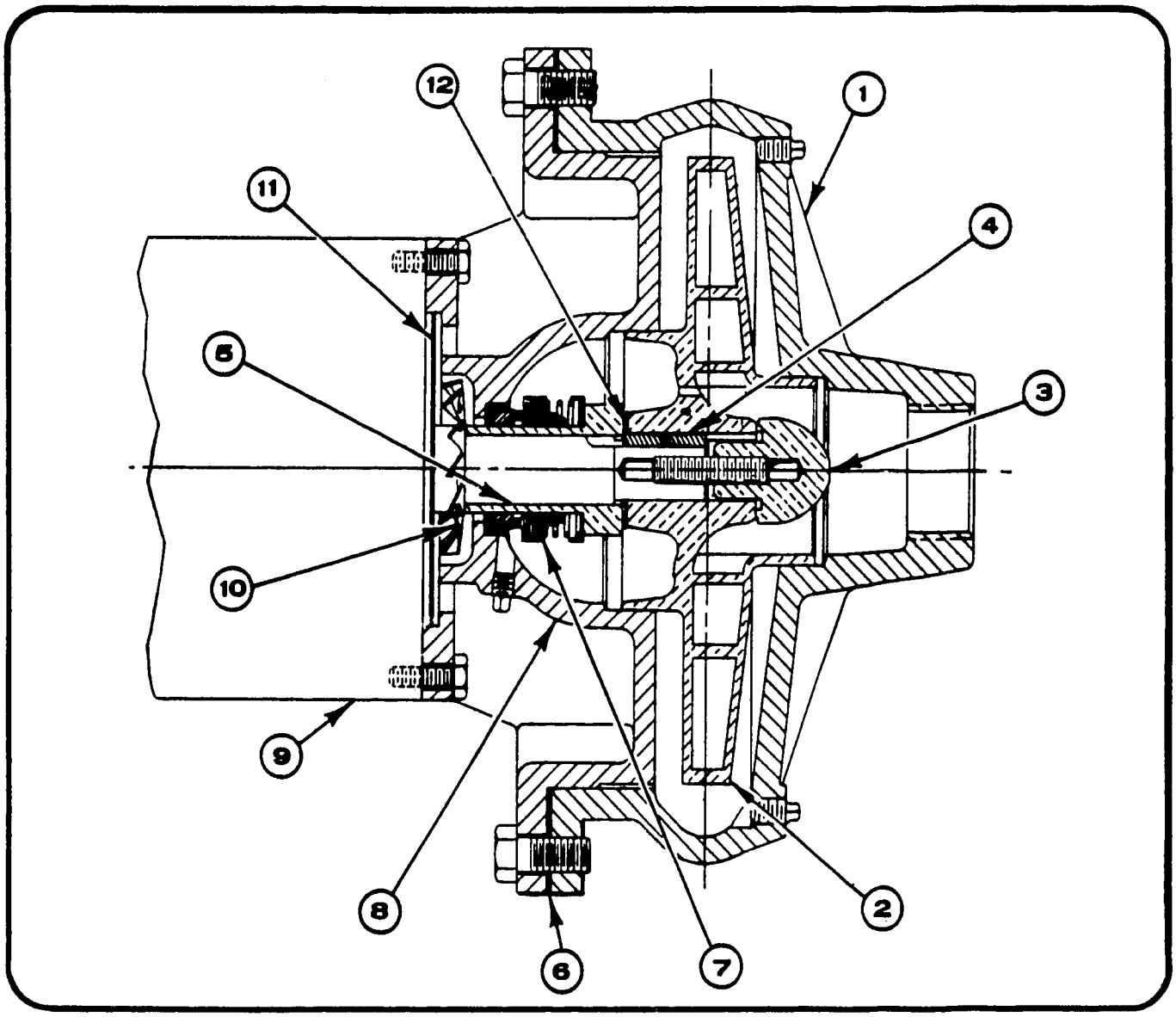

A9 PUMP AND PARTS LIST
SERIES A – 1½ HP

PART NUMBER AND DESCRIPTION	1½ HP 1" 1φ & 3φ A9C1A	1½ HP 1¼" 1φ & 3φ A9D1A	1½ HP 2" 1φ & 3φ A9D1A	1½ HP 2½" 1φ & 3φ A9D1A
1 CASE (CAST IRON) CASE (BRONZE)	D541 D2-76	F540 D2-74	F544 D2-80	F545 D2-79
2 IMPELLER (BRONZE)	C2-3211X $8^{7}/_{16}$"	C2-3213X $6^{3}/_{8}$"	C2-3214X $5^{29}/_{32}$"	C2-3215X $5^{21}/_{33}$"
3 STUD & NUT ASSEMBLY	C10035 A2-3898	C10035 A2-3898	C10035 A2-3898	C10035 A2-3898
4 KEY	C7763	C7763	C7763	C7763
5 SLEEVE *	A2-3905	A2-3905	A2-3905	A2-3905
6 GASKET *	D5450	D5450	D5450	D5450
7 SHAFT SEAL *	3179	3179	3179	3179
8 HEAD (CAST IRON) HEAD (BRONZE)	D2-1478 D2-1480	D2-1478 D2-1480	D2-1478 D2-1479	D2-1478 D2-1480
9 MOTOR	Contact Dunham-Bush, Inc., Marshalltown, Iowa			
10 SLINGER	C10038	C10038	C10038	C10038
11 SHIELD	C8958	C8958	C8958	C8958
12 GASKET *	A2-3020	A2-3020	A2-3020	A2-3020

NOTES: 1. NON-STANDARD pump parts are not shown. When ordering repair parts, refer to page 1 of this catalog.
2. * = These parts are required when replacing shaft seal.

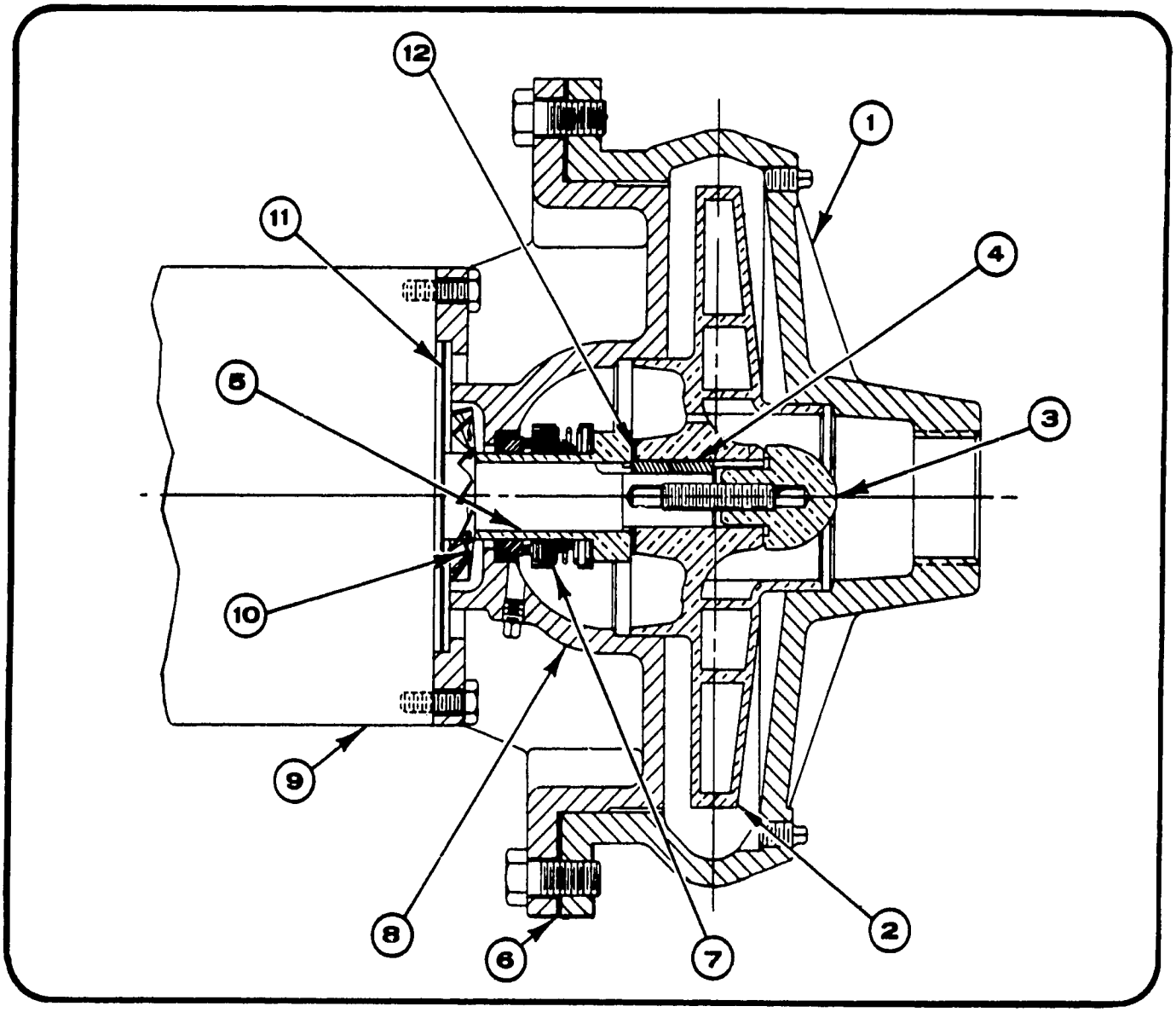

A9 PUMP AND PARTS LIST
SERIES A - 2 HP

PART NUMBER AND DESCRIPTION	2 HP 1" 1ϕ A9C1A	2 HP 1" 3ϕ A9C1A	2 HP 1¼" 1ϕ A9D1A	2 HP 1¼" 3ϕ A9D1A	2 HP 2" 1ϕ D9D1A	2 HP 2" 3ϕ A9D1A	2 HP 2½" 1ϕ A9D1A	2 HP 2½" 3ϕ A9D1A
1 CASE (CAST IRON) CASE (BRONZE)	F541 D2-76	F541 D2-76	F540 D2-74	F540 D2-74	F544 D2-80	F544 D2-80	F545 D2-79	F545 D2-79
2 IMPELLER (BRONZE)	C2-3211X 9"	C2-3211X 9"	C2-3213X $7^3/_{16}$"	C2-3213X $7^3/_{16}$"	C2-3214X $6^1/_2$"	C2-3214X $6^1/_2$"	C2-3215X $6^1/_8$"	C2-3215X $6^1/_8$"
3 STUD & NUT ASSEMBLY	C10035 A2-3898	C10035 A2-3898	C10035 A2-3898	C10035 A2-3898	C10035 A2-3898	C10035 A2-3898	C10035 A2-3898	C10035 A2-3898
4 KEY	C7763	C7763	C7763	C7763	C7763	C7763	C7763	C7763
5 SLEEVE *	A2-3905	A2-3905	A2-3905	A2-3905	A2-3905	A2-3905	A2-3905	A2-3905
6 GASKET *	D5450	D5450	D5450	D5450	D5450	D5450	D5450	D5450
7 SHAFT SEAL *	3179	3179	3179	3179	3179	3179	3179	3179
8 HEAD (CAST IRON) HEAD (BRONZE)	D2-1478 D2-1480	D2-1478 D2-1480	D2-1478 D2-1480	D2-1478 D2-1480	D2-1478 D2-1480	D2-1478 D2-1480	D2-1478 D2-1480	D2-1478 D2-1480
9 MOTOR	Contact Dunham-Bush, Inc., Marshalltown, Iowa							
10 SLINGER	C10038	C10038	C10038	C10038	C10038	C10038	C10038	C10038
11 SHIELD	C8958	C8958	C8958	C8958	C8958	C8958	C8958	C8958
12 GASKET *	A2-3020	A2-3020	A2-3020	A2-3020	A2-3020	A2-3020	A2-3020	A2-3020

NOTES: 1. NON-STANDARD pump parts are not shown. When ordering repair parts, refer to page 1 of this catalog.
2. * = These parts are required when replacing shaft seal.

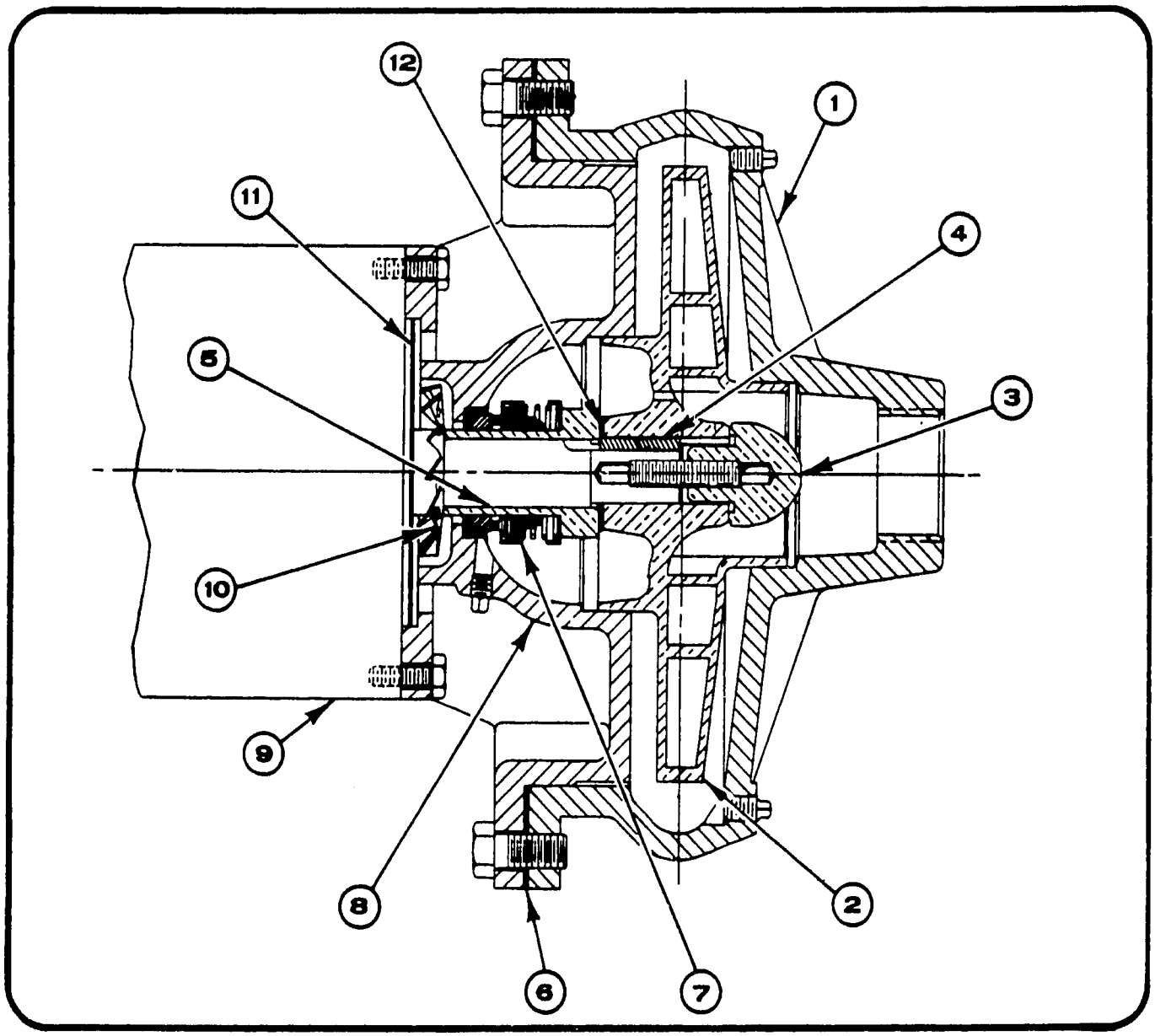

A9 PUMP AND PARTS LIST SERIES A – 3 HP

PART NUMBER AND DESCRIPTION	3 HP 1" 3ϕ A9D2A	3 HP 1" 3ϕ A9C2A	3 HP 1¼" 3ϕ A9D1A	3 HP 1¼" 3ϕ A9D2A	3 HP 2" 3ϕ A9D1A	3 HP 2½" 3ϕ A9D1A
1 CASE (CAST IRON) CASE (BRONZE)	F541 D2-76	F541 D2-76	F540 D2-74	F540 D2-74	F544 D2-80	F545 D2-79
2 IMPELLER (BRONZE)	C2-3212X 5¼"	C2-3211X 6 1/16"	C2-3213X 8¼"	C2-3213X 4 7/16"	C2-3214X 7 1/16"	C2-3215X 6¾"
3 STUD & NUT ASSEMBLY	C10035 A2-3898	C10035 A2-3898	C10035 A2-3898	C10035 A2-3898	C10035 A2-3898	C10035 A2-3898
4 KEY	C7763	C7763	C7763	C7763	C7763	C7763
5 SLEEVE *	A2-3905	A2-3905	A2-3905	A2-3905	A2-3905	A2-3905
6 GASKET *	D5450	D5450	D5450	D5450	D5450	D5450
7 SHAFT SEAL *	3179	3179	3179	3179	3179	3179
8 HEAD (CAST IRON) HEAD (BRONZE)	D2-1478 D2-1480	D2-1478 D2-1480	D2-1478 D2-1480	D2-1478 D2-1480	D2-1478 D2-1480	D2-1478 D2-1480
9 MOTOR	Contact Dunham-Bush, Inc., Marshalltown, Iowa					
10 SLINGER	C10038	C10038	C10038	C10038	C10038	C10038
11 SHIELD	C8958	C8958	C8958	C8958	C8958	C8958
12 GASKET *	A2-3020	A2-3020	A2-3020	A2-3020	A2-3020	A2-3020

NOTES: 1. NON-STANDARD pump parts are not shown. When ordering repair parts, refer to page 1 of this catalog.
2. * = These parts are required when replacing shaft seal.

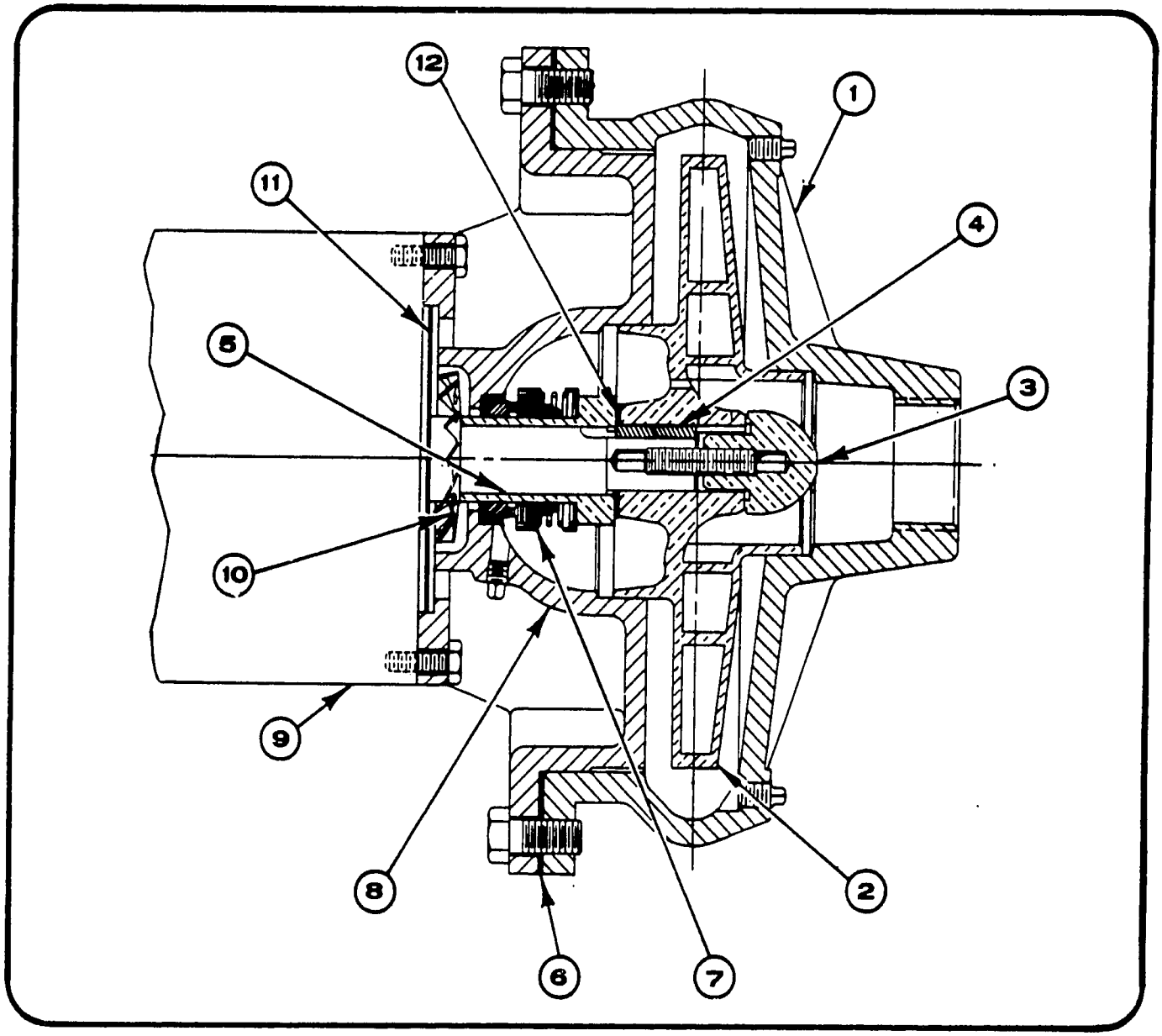

A9 PUMP AND PARTS LIST SERIES A – 5 HP

PART NUMBER AND DESCRIPTION	5 HP 1" 3ϕ A9C2A	5 HP 1" 3ϕ A9D2A	5 HP 1¼" 3ϕ A9D2A	5 HP 2" 3ϕ A9D1A	5 HP 2" 3ϕ A9D2A	5 HP 2½" 3ϕ A9D1A	5 HP 2½" 3ϕ A9D2A
1 CASE (CAST IRON) CASE (BRONZE)	F541 D2-76	F541 D2-76	F540 D2-74	F544 D2-80	F544 D2-80	F545 D2-79	F545 D2-79
2 IMPELLER (BRONZE)	C2-3211X $6^{9}/_{16}$"	C2-3212X $5^{7}/_{8}$"	C2-3213X $5^{15}/_{32}$"	C2-3214X $8^{7}/_{16}$"	C2-3214X $4^{15}/_{16}$"	C2-3215X $7^{15}/_{16}$"	C2-3215X $4^{3}/_{4}$"
3 STUD & NUT ASSEMBLY	C10035 A2-3898	C10035 A2-3898	C10035 A2-3898	C10035 A2-3899	C10035 A2-3899	C10035 A2-3899	C10035 A2-3899
4 KEY	C7763	C7763	C7763	C7763	C7763	C7763	C7763
5 SLEEVE *	A2-3905	A2-3905	A2-3905	A2-3905	A2-3905	A2-3905	A2-3905
6 GASKET *	D5450	D5450	D5450	D5450	D5450	D5450	D5450
7 SHAFT SEAL*	3179	3179	3179	3179	3179	3179	3179
8 HEAD (CAST IRON) HEAD (BRONZE)	D2-1478 D2-1480	D2-1478 D2-1480	D2-1478 D2-1480	D2-1478 D2-1480	D2-1478 D2-1480	D2-1478 D2-1480	D2-1478 D2-1480
9 MOTOR	Contact Dunham-Bush, Inc., Marshalltown, Iowa						
10 SLINGER	C10038	C10038	C10038	C10038	C10038	C10038	C10038
11 SHIELD	C8958	C8958	C8958	C8958	C8958	C8958	C8958
12 GASKET *	A2-3020	A2-3020	A2-3020	A2-3020	A2-3020	A2-3020	A2-3020

NOTES: 1. NON-STANDARD pump parts are not shown. When ordering repair parts, refer to page 1 of this catalog.
2. * = These parts are required when replacing shaft seal.

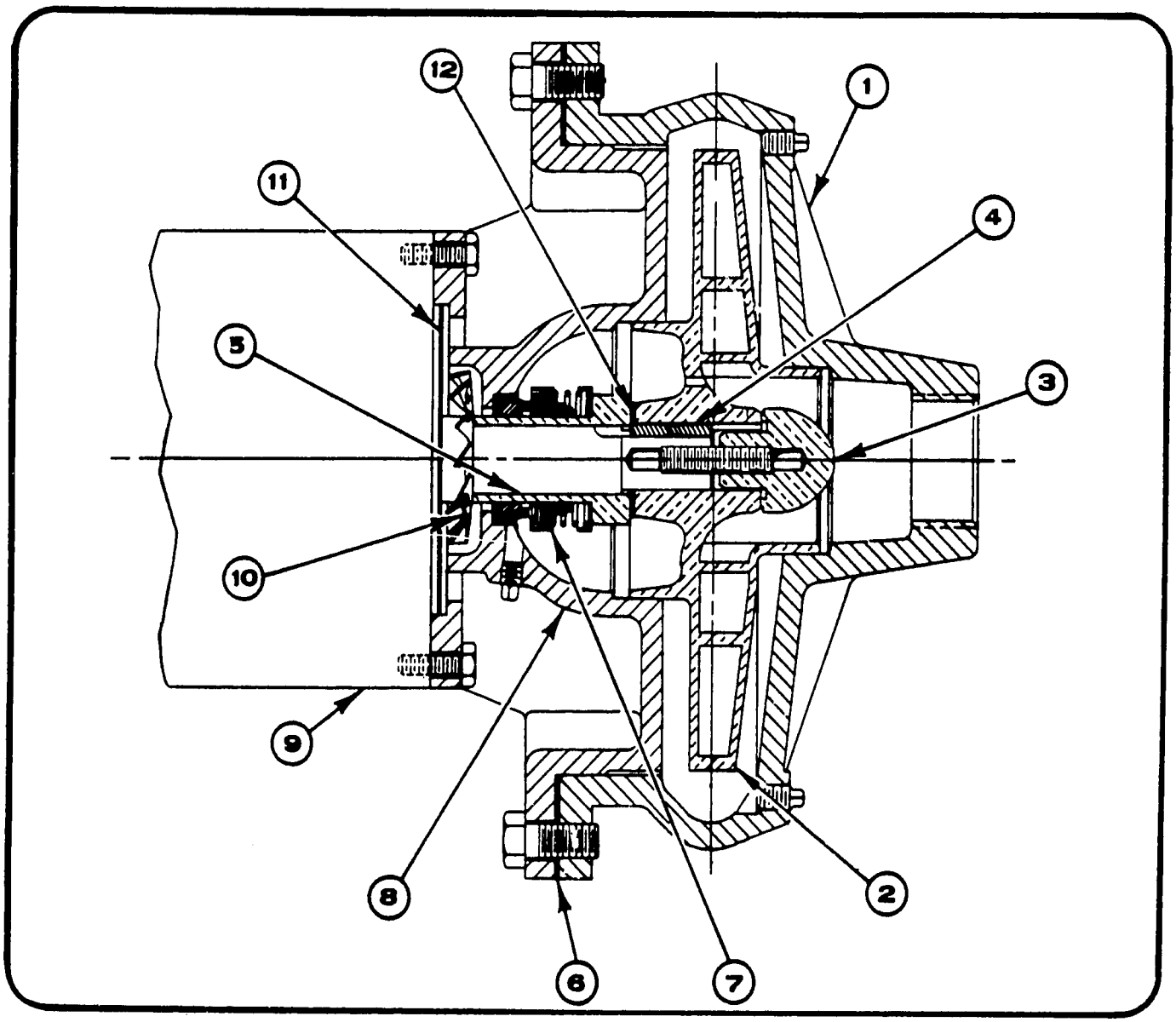

A9 PUMP AND PARTS LIST
SERIES A - 7½ HP

PART NUMBER AND DESCRIPTION	7½ HP 1¼" 3ϕ A9D2A	7½ HP 2" 3ϕ A9D2A	7½ HP 2½" 3ϕ A9D1A	7½ HP 2½" 3ϕ A9D1A
1 CASE (CAST IRON) CASE (BRONZE)	F540 D2-74	F544 D2-80	F545 D2-79	F545 D2-79
2 IMPELLER (BRONZE)	C2-3213X 5 15/16"	C2-3214X 5 9/16"	C2-3215X 9"	C2-3215X 5 5/16"
3 STUD & NUT ASSEMBLY	C10035 A2-3899	C10035 A2-3899	C10035 A2-3899	C10035 A2-3899
4 KEY	C7763	C7763	C7763	C7763
5 SLEEVE *	A2-3905	A2-3905	A2-3905	A2-3905
6 GASKET *	D5450	D5450	D5450	D5450
7 SHAFT SEAL*	3179	3179	3179	3179
8 HEAD (CAST IRON) HEAD (BRONZE)	D2-1478 D2-1480	D2-1478 D2-1480	D2-1481 D2-1483	D2-1478 D2-1480
9 MOTOR	Contact Dunham-Bush, Inc., Marshalltown, Iowa			
10 SLINGER	C1038	C1038	C1038	C1038
11 SHIELD	C8958	C8958	D5478	C8958
12 GASKET *	A2-3020	A2-3020	A2-3020	A2-3020

NOTES:
1. NON-STANDARD pump parts are not shown. When ordering repair parts, refer to page 1 of this catalog.
2. * = These parts are required when replacing shaft seal.

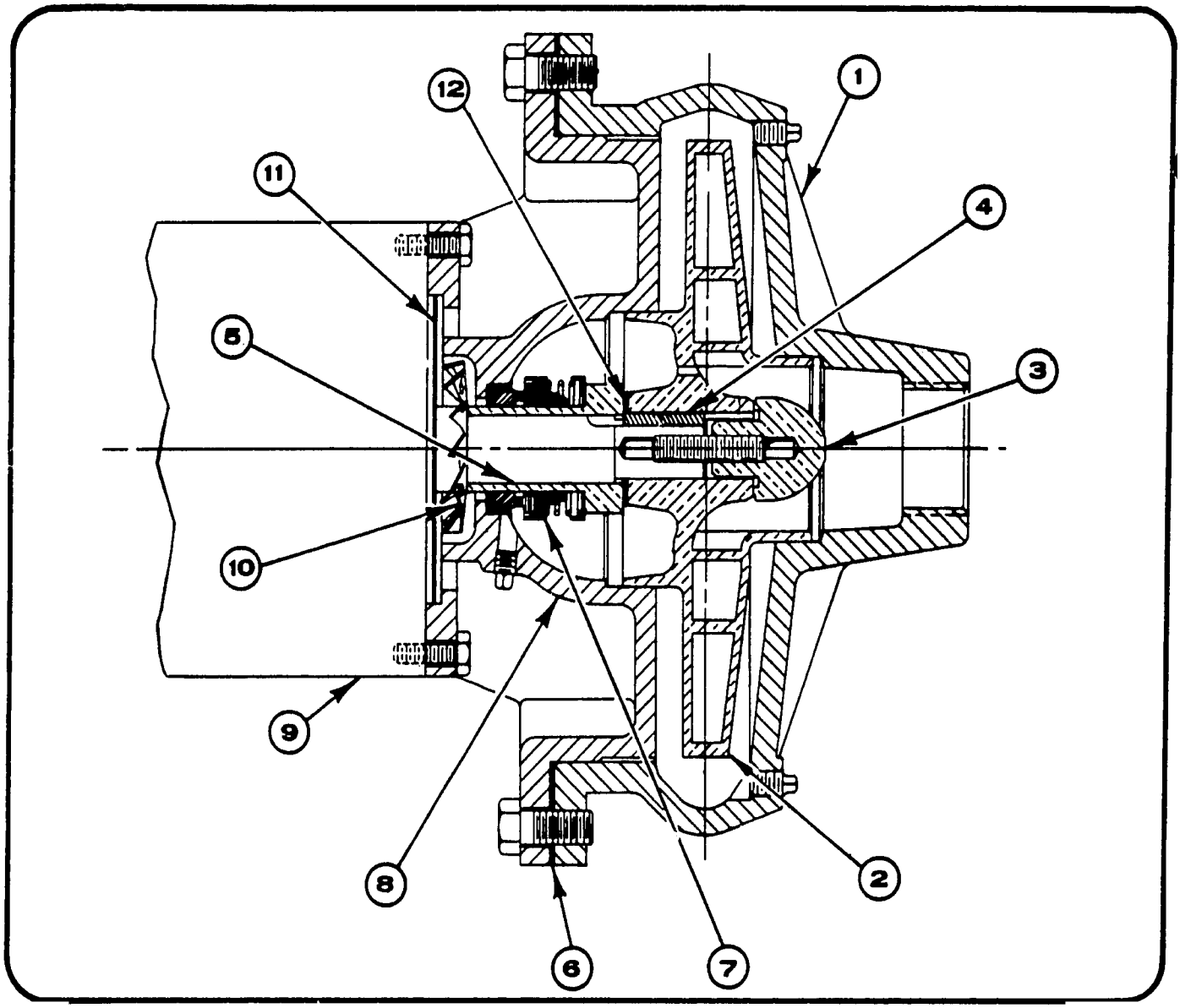

A9 PUMP AND PARTS LIST
SERIES A – 10 HP AND 15 HP

PART NUMBER AND DESCRIPTION	10 HP 1¼" 3ϕ A9D2A	10 HP 2" 3ϕ A9D2A	10 HP 2½" 3ϕ A9D2A	15 HP 2" 3ϕ A9D2A
1 CASE (CAST IRON) CASE (BRONZE)	F540 D2-74	F544 D2-80	F545 D2-79	F544 D2-80
2 IMPELLER (BRONZE)	C2-3213X $6^{3}/_{8}$"	C2-3214X $5^{29}/_{32}$"	C2-3215X $5^{21}/_{32}$"	C2-3214X $6^{5}/_{16}$"
3 STUD & NUT ASSEMBLY	C10035 A2-3899	C10035 A2-3899	C10035 A2-3899	C10035 A2-3899
4 KEY	C7763	C7763	C7763	C7763
5 SLEEVE *	A2-3905	A2-3905	A2-3905	A2-3905
6 GASKET *	D5450	D5450	D5450	D5450
7 SHAFT SEAL *	3179	3179	3179	3179
8 HEAD (CAST IRON) HEAD (BRONZE)	D2-1481 D2-1483	D2-1481 D2-1483	D2-1481 D2-1483	D2-1481 D2-1483
9 MOTOR	Contact Dunham-Bush, Inc., Marshalltown, Iowa			
10 SLINGER	C1038	C1038	C1038	C1038
11 SHIELD	D5478	D5478	D5478	D5478
12 GASKET *	A2-3020	A2-3020	A2-3020	A2-3020

NOTES: 1. NON-STANDARD pump parts are not shown. When ordering repair parts, refer to page 1 of this catalog.
2. * = Those parts are required when replacing shaft seal.

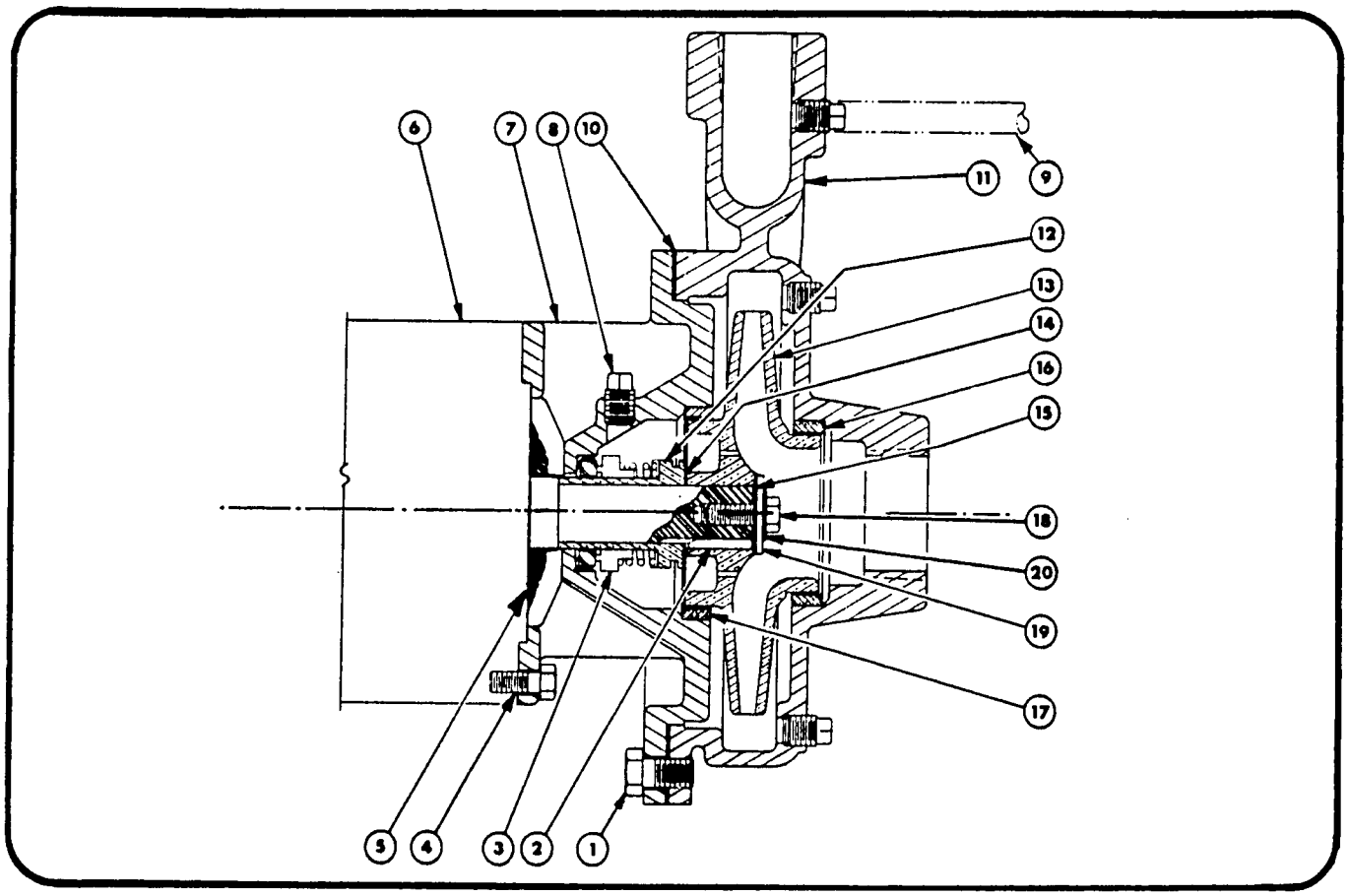

A7 PUMP AND PARTS LIST – ¾", 1¼" AND 1½" DIA. DISCHARGE

PART NUMBER & DESCRIPTION		¾" A7B	1¼" A7B	1¼" A7C	1½" A7B	1½" A7C
1.	Screw – Cap	P - 150				
2.	Key – Impeller	Supplied with Motor				
3.	Seal – Mechanical *	3179	3179	3179	3179	3179
	Seal – 250# Optional	Contact Dunham-Bush, Inc., Marshalltown, Iowa				
4.	Screw – Cap	P-142	P-142	P-150	P-142	P-150
5.	Slinger	Supplied with Motor				
6.	Motor	Contact Dunham-Bush, Inc., Marshalltown, Iowa				
7.	Head, C.I.	C2-2336	C2-2336	C2-2337	C2-2336	C2-2337
	Head, Bronze	C2-2660	C2-2660	C2-2661	C2-2660	C2-2661
	Head, C.I. w/wear Rings	C2-2345	C2-2345	C2-2346	C2-2345	C2-2346
8.	Fitting – Compression Straight	P - 194 (Optional)				
	Fitting – Elbow, Not shown	P - 195 (Optional)				
	Plug – Pipe	(5) P - 196				
9.	Tube	Copper 1/8" OD (Optional)				
10.	Gasket – Case *	C2-2343				
11.	Case, C.I.	C2-2390	C2-2335		C2-2377	
	Case, (Bronze)	C2-2665	C2-2666		C2-2667	
	Case, C.I. w/wear Rings	C2-2389	C2-2347		C2-2376	
	Case, 250# C.I.	Not Available				
	Case, 250# Bronze	Not Available				
	Case, 250# C.I. w/wear Rings	Not Available				
12.	Sleeve *	A2-3018	A2-3018	A2-3018	A2-3018	A2-3018
	Seal – 250# Optional	Contact Dunham-Bush, Inc., Marshalltown, Iowa				
13.	Impeller	C2-2378	C2-2340	C2-2340	C2-2380	C2-2380
14.	Gasket (Impeller – Sleeve) *	A2-3020	A2-3020	A2-3020	A2-3020	A2-3020
15.	Gasket (Impeller – Head) *	A2-3022-1				
16.	Ring – Case Wear Ring	A2-3026	A2-3015		A2-3027	
17.	Ring – Head Wear Ring	A2-3016				
18.	Screw – Impeller	3312	3312	3312	3312	3312
19.	Washer – Impeller	A2-3021-1				
20.	Washer – Sealing	3313	3313	3313	3313	3313

NOTES: 1. NON-STANDARD pump parts are not shown. When ordering repair parts, refer to page 1 of this catalog.
2. * = These parts are required when replacing shaft seal.

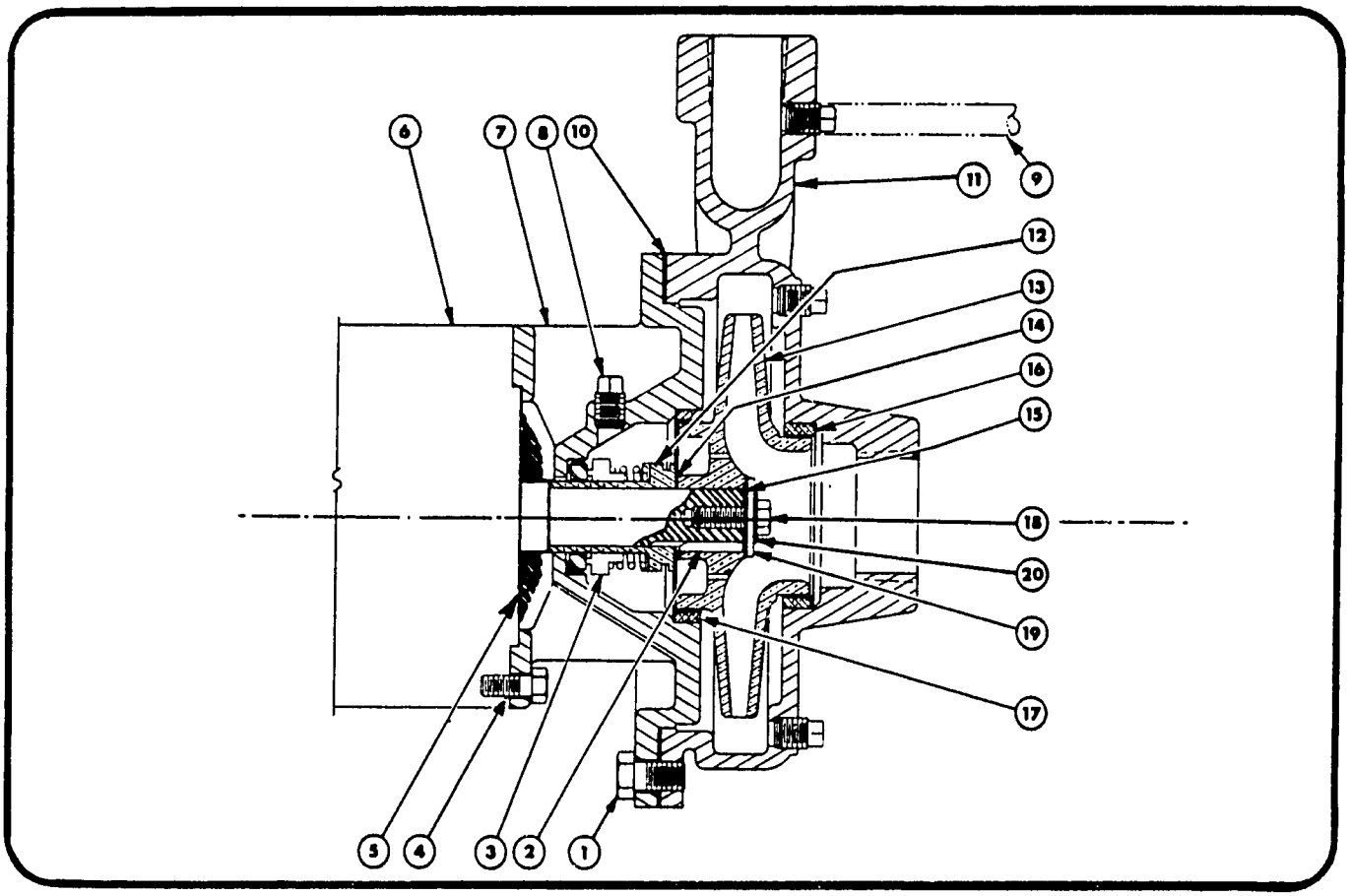

A7 PUMP AND PARTS LIST – 2" AND 2½" DIA. DISCHARGE

PART NUMBER & DESCRIPTION		2" A7D	2" A7E	2" A7F	2½" A7D	2½" A7E	2½" A7E H.C.	2½" A7F
1.	Screw – Cap	P - 150						
2.	Key – Impeller	Supplied with Motor						
3.	Seal – Mechanical *	3179	3179	3291	3179	3179	3179	3291
	Seal – 250# Optional	Contact Dunham-Bush, Inc., Marshalltown, Iowa						
4.	Screw – Cap	P - 142	P - 150	P - 150	P - 142	P - 150	P - 150	P - 150
5.	Slinger	Supplied with Motor						
6.	Motor	Contact Dunham-Bush, Inc., Marshalltown, Iowa						
7.	Head, C.I.	C2-2384	C2-2386	C2-2388	C2-2384	C2-2386	C2-2386	C2-2388
	Head, Bronze	C2-2662	C2-2663	C2-2664	C2-2662	C2-2663	C2-2663	C2-2664
	Head, C.I. w/wear rings	C2-2383	C2-2385	C2-2387	C2-2383	C2-2385	C2-2385	C2-2387
8.	Fitting – Compression Straight	P - 194 (Optional)						
	Fitting – Elbow, Not shown	P - 195 (Optional)						
	Plug – Pipe	(5) P - 196						
9.	Tube	Copper 1/8" OD (Optional)						
10.	Gasket – Case *	C2-2343						
11.	Case, C.I.	D2-1274			D2-1276			
	Case, (Bronze)	D2-1352			D2-1355			
	Case, C.I. w/wear rings	D2-1273			D2-1275			
	Case, 250# C.I.	Not Available						
	Case, 250# Bronze	Not Available						
	Case, 250# C.I. w/wear rings	Not Available						
12.	Sleeve *	A2-3018	A2-3018	A2-3025	A2-3018	A2-3018	A2-3018	A2-3025
	Seal – 250# Optional	Contact Dunham-Bush, Inc., Marshalltown, Iowa						
13.	Impeller	C2-2381	C2-2381	C2-2382	C2-2381	C2-2381	C2-2392	C2-2382
14.	Gasket (Impeller – Sleeve) *	A2-3020	A2-3020	A2-3029	A2-3020	A2-3020	A2-3020	A2-3029
15.	Gasket (Impeller – Head) *	A2-3021-1		A2-3022-2	A2-3022-1			A2-3022-2
16.	Ring – Case Wear Ring	A2-3028						
17.	Ring – Head Wear Ring	A2-3016						
18.	Screw – Impeller	3312	3312	3292	3312	3312	3312	3292
19.	Washer – Impeller	A2-3021-1		A2-3021-2	A2-3021-1			A2-3021-2
20.	Washer – Sealing	3313	3313	3293	3313	3313	3313	3293

NOTES: 1. NON-STANDARD pump parts are not shown. When ordering repair parts, refer to page 1 of this catalog.
2. * = These parts are required when replacing shaft seal.

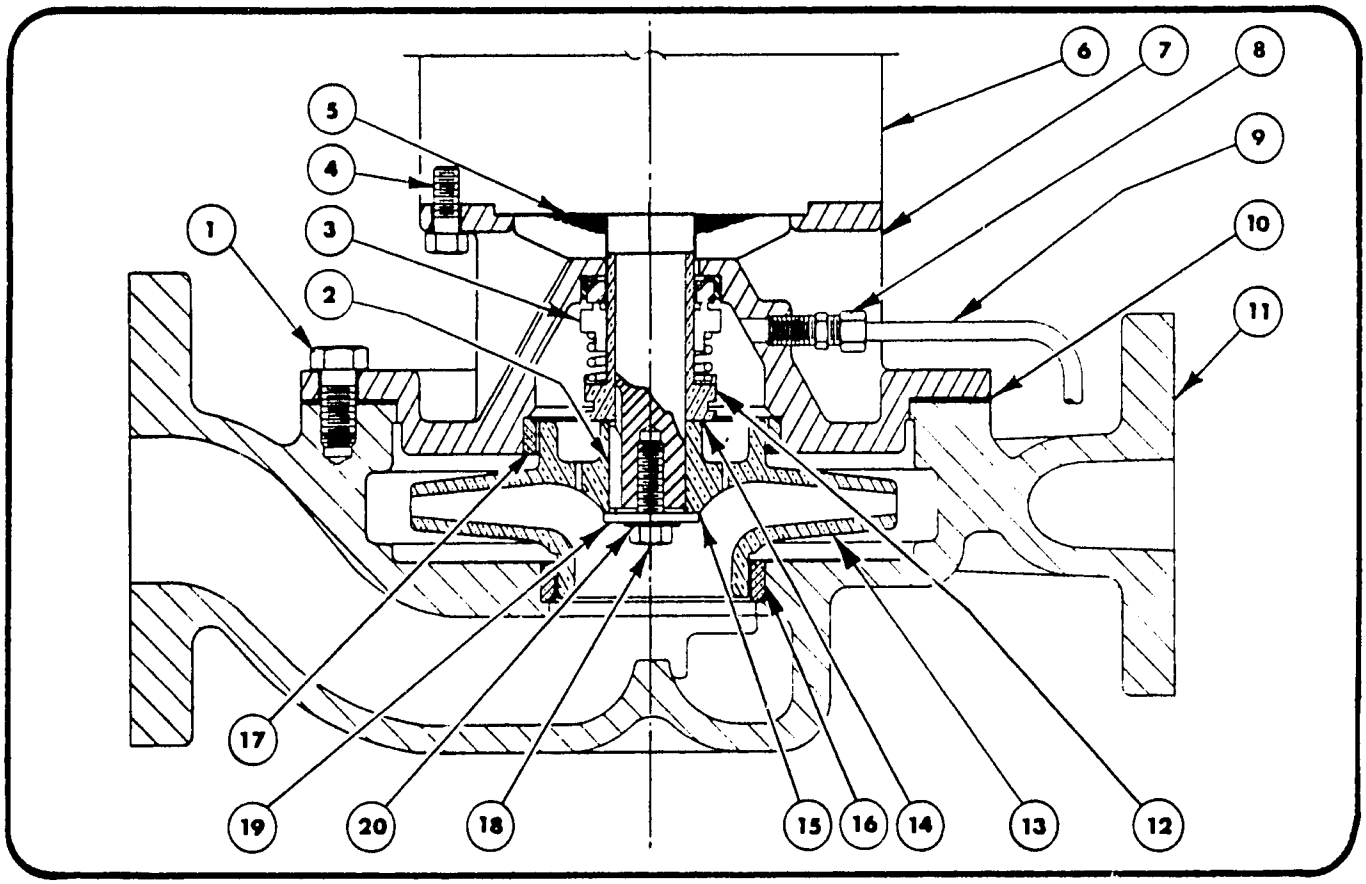

PM7 PUMP AND PARTS LIST – 1", 1¼" AND 1½" DIA. DISCHARGE

PART NUMBER & DESCRIPTION		1" PM7B	1¼" PM7B	1¼" PM7C	1½" PM7B	1½" PM7C
1.	Screw - Cap	P - 150				
2.	Key - Impeller	Supplied with Motor				
3.	Seal - Mechanical *	3179	3179	3179	3179	3179
	Seal 250# Optional	Contact Dunham-Bush, Inc. – Marshalltown, Iowa				
4.	Screw - Cap	P - 142	P - 142	P - 150	P - 142	P - 150
5.	Slinger	Supplied with Motor				
6.	Motor	Contact Dunham-Bush, Inc. – Marshalltown, Iowa				
7.	Head, C.I.	C2-2336	C2-2336	C2-2337	C2-2336	C2-2337
	Head, (Bronze)	C2-2660	C2-2660	C2-2661	C2-2660	C2-2661
	Head, C.I. w/wear rings	C2-2345	C2-2345	C2-2346	C2-2345	C2-2346
8.	Fitting - Compression Straight	P-194				
	Fitting - Elbow – Not shown	P-195				
	Plug - Pipe	(1) P-196				
9.	Tube	Copper 1/8" OD				
10.	Gasket - Case *	C2-2343				
11.	Case, C.I.	D2-1268	D2-1256	D2-1256	D2-1266	D2-1266
	Case, (Bronze)	D2-1346	D2-1348	D2-1348	D2-1350	D2-1350
	Case, C.I. w/wear rings	D2-1267	D2-1255	D2-1255	D2-1265	D2-1265
	Case, 250# C.I.	D2-1299	D2-1301	D2-1301	D2-1303	D2-1303
	Case, 250# Bronze	D2-1347	D2-1349	D2-1349	D2-1351	D2-1351
	Case, 250# C.I. w/wear rings	D2-1300	D2-1302	D2-1302	D2-1304	D2-1304
12.	Sleeve *	A2-3018	A2-3018	A2-3018	A2-3018	A2-3018
	Seal 250# Optional	Contact Dunham-Bush, Inc. – Marshalltown, Iowa				
13.	Impeller	C2-2379	C2-2340	C2-2340	C2-2380	C2-2380
14.	Gasket (Impeller - Sleeve) *	A2-3020	A2-3020	A2-3020	A2-3020	A2-3020
15.	Gasket (Impeller - Head) *	A2-3022-1				
16.	Ring - Case Wear Ring	A2-3026	A2-3015	A2-3015	A2-3027	A2-3027
17.	Ring - Head Wear Ring	A2-3016				
18.	Screw - Impeller	3312				
19.	Washer - Impeller	A2-3021-1				
20.	Washer - Sealing	3313				

NOTES: 1. NON-STANDARD pump parts are not shown. When ordering repair parts, refer to page 1 of this catalog.
2. * = These parts are required when replacing shaft seal.

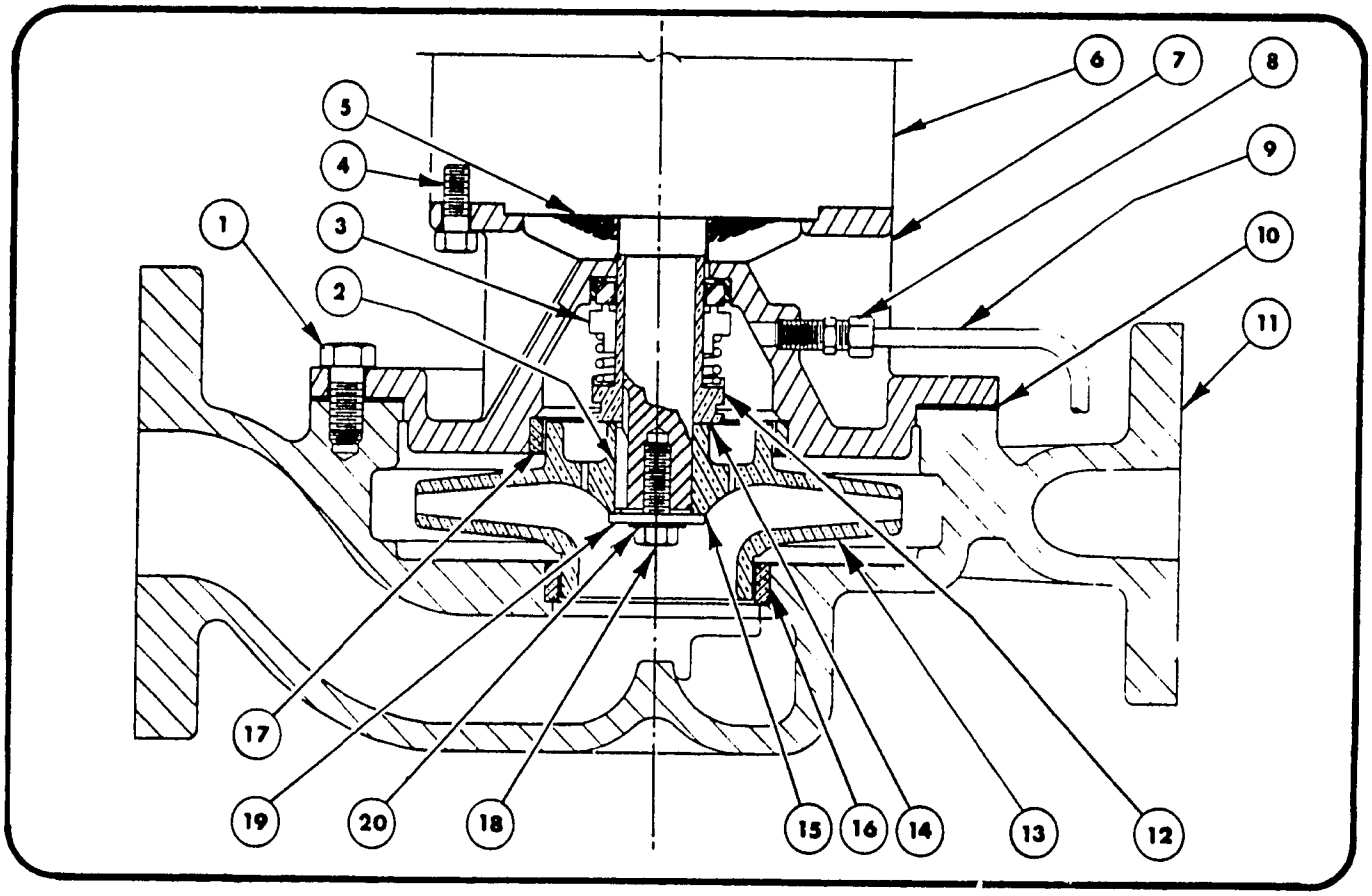

PM7 PUMP AND PARTS LIST – 2" AND 2½" DIA. DISCHARGE

PART NUMBER & DESCRIPTION		2" PM7D	2" PM7E	2" PM7F	2½" PM7D	2½" PM7E	2½" PM7E H.C.	2½" PM7F
1.	Screw - Cap	P - 150						
2.	Key - Impeller	Supplied with Motor						
3.	Seal - Mechanical *	3179	3179	3291	3179	3179	3179	3291
	Seal 250# Optional	Contact Dunham-Bush, Inc. – Marshalltown, Iowa						
4.	Screw - Cap	P - 142	P - 150	P - 150	P - 142	P -150	P - 150	P -150
5.	Slinger	Supplied with Motor						
6.	Motor	Contact Dunham-Bush, Inc. – Marshalltown, Iowa						
7.	Head, C.I.	C2-2384	C2-2386	C2-2388	C2-2384	C2-2386	C2-2386	C2-2388
	Head, (Bronze)	C2-2662	C2-2663	C2-2664	C2-2662	C2-2663	C2-2663	C2-2664
	Head, C.I. w/wear rings	C2-2383	C2-2385	C2-2387	C2-2383	C2-2385	C2-2385	C2-2387
8.	Fitting - Compression Straight	P-194						
	Fitting - Elbow – Not Shown	P-195						
	Plug - Pipe	(1) P-196						
9.	Tube	Copper 1/8" OD						
10.	Gasket - Case *	C2-2343						
11.	Case, C.I.	D2-1270			D2-1272			
	Case, (Bronze)	D2-1269			D2-1356			
	Case, C.I. w/wear rings	D2-1353			D2-1271			
	Case, 250# C.I.	D2-1305			D2-1307			
	Case, 250# Bronze	D2-1354			D2-1357			
	Case, 250# C.I. w/wear rings	D2-1306			D2-1308			
12.	Sleeve *	A2-3018	A2-3018	A2-3025	A2-3018	A2-3018	A2-3018	A2-3025
	Seal 250# Optional	Contact Dunham-Bush, Inc. – Marshalltown, Iowa						
13.	Impeller	C2-2381	C2-2381	C2-2382	C2-2381	C2-2381	C2-2392	C2-2382
14.	Gasket (Impeller - Sleeve) *	A2-3020	A2-3020	A2-3029	A2-3020	A2-3020	A2-3020	A2-3029
15.	Gasket (Impeller - Head)	A2-3022-1		A2-3022-2	A2-3022-1			A2-3022-2
16.	Ring - Case Wear Ring	A2-3028						
17.	Ring - Head Wear Ring	A2-3016						
18.	Screw - Impeller	3312		3292	3312			3292
19.	Washer - Impeller	A2-3021-1		A2-3021-2	A2-3021-1			A2-3021-2
20.	Washer - Sealing	3313		3293	3313			3293

NOTES: 1. NON-STANDARD pump parts are not shown. When ordering repair parts, refer to page 1 of this catalog.
2. * = These parts are required when replacing shaft seal.

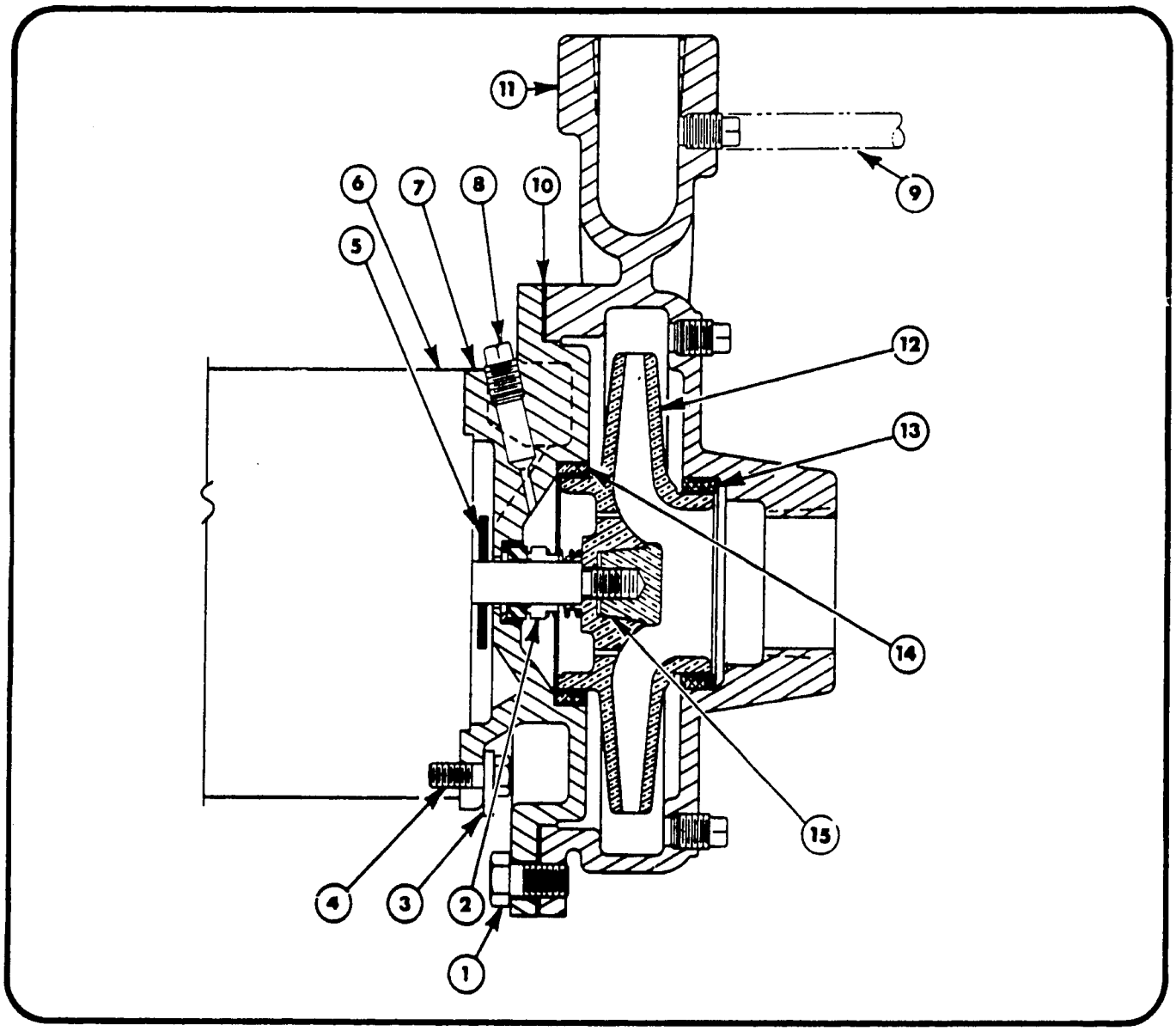

A7A PUMP AND PARTS LIST – ¾", 1¼" AND 1½" DIA. DISCHARGE

	PART NUMBER & DESCRIPTION	¾" A7A	1¼" A7A	1½" A7A
1.	Screw–Cap	P - 150	P - 150	P - 150
2.	Seal–Mechanical *	472	472	472
3.	Retainer–Head	A2-3023	A2-3023	A2-3023
4.	Screw–Cap	P - 142	P - 142	P - 142
5.	Slinger	C8854	C8854	C8854
6.	Motor	Contact Dunham-Bush, Inc. Marshalltown, Iowa		
7.	Head, C.I.	C2-2342	C2-2342	C2-2342
	Head, Bronze	C2-2659	C2-2659	C2-2659
	Head, C.I. w/wear rings	C2-2344	C2-2344	C2-2344
8.	Fitting – Compression Straight	P - 194 (Optional)		
	Fitting – Elbow (Not Shown)	P - 195 (Optional)		
	Plug–Pipe	(5) P - 196		
9.	Tube	Copper 1/8" OD (Optional)		
10.	Gasket–Case *	C2-2343	C2-2343	C2-2343
11.	Case, C.I.	C2-2390	C2-2335	C2-2377
	Case, Bronze	C2-2665	C2-2666	C2-2667
	Case, C.I. w/wear rings	C2-2389	C2-2347	C2-2376
12.	Impeller	C2-2378	C2-2339	C2-2498
13.	Ring – Case Wear Ring	A2-3026	A2-3015	A2-3027
14.	Ring – Head Wear Ring	A2-3016	A2-3016	A2-3016
15.	Screw–Impeller	A2-3691	A2-3691	A2-3691

NOTES:
1. NON-STANDARD pump parts are not shown. When ordering repair parts, refer to page 1 of this catalog.
2. * = These parts are required when replacing shaft seal.

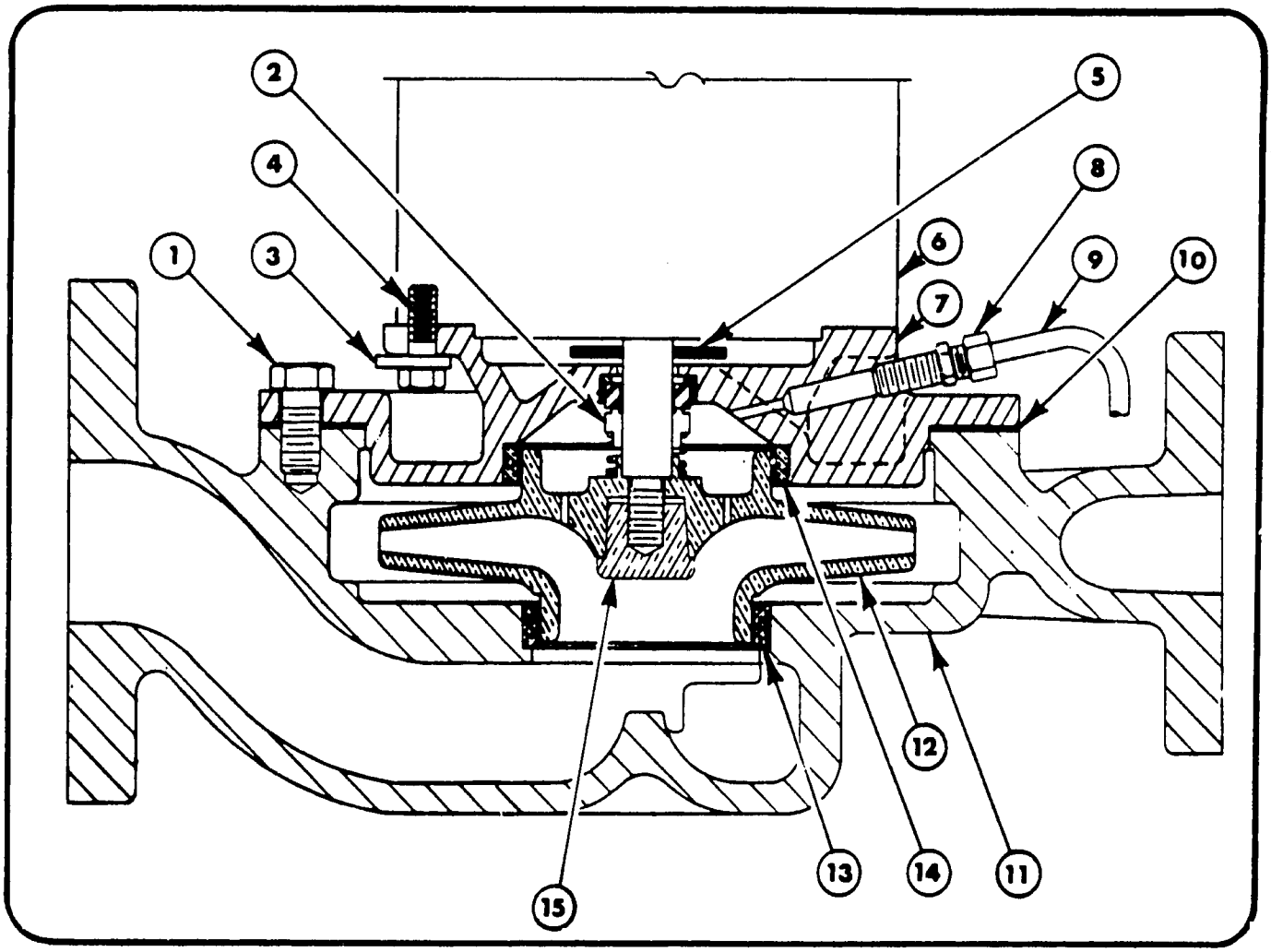

PM7A PUMP AND PARTS LIST
1", 1¼" AND 1½" DIA. DISCHARGE

PART NUMBER & DESCRIPTION		1" PM7A	1¼" PM7A	1½" PM7A
1.	Screw—Cap	P - 150	P - 150	P - 150
2.	Seal—Mechanical *	472	472	472
3.	Retainer—Head	A2-3023	A2-3023	A2-3023
4.	Screw—Cap	P - 142	P - 142	P - 142
5.	Slinger	C8854	C8854	C8854
6.	Motor	Contact Dunham-Bush, Inc., Marshalltown, Iowa		
7.	Head, C.I.	C2-2342	C2-2342	C2-2342
	Head, Bronze	C2-2659	C2-2659	C2-2659
	Head, C.I. w/wear rings	C2-2344	C2-2344	C2-2344
8.	Fitting—Compression Straight	P - 194		
	Fitting—Elbow (Not Shown)	P - 195		
	Plug—Pipe	(1) P - 196		
9.	Tube	Copper 1/8" OD		
10.	Gasket—Case *	C2-2343	C2-2343	C2-2343
11.	Case, C.I.	D2-1268	D2-1256	D2-1266
	Case, Bronze	D2-1346	D2-1348	D2-1350
	Case, C.I. w/wear rings	D2-1267	D2-1255	D2-1265
	Case, 250# C.I.	D2-1299	D2-1301	D2-1303
	Case, 250# Bronze	D2-1347	D2-1349	D2-1351
	Case, 250# C.I. w/wear rings	D2-1300	D2-1302	D2-1304
12.	Impeller	C2-2378	C2-2339	C2-2498
13.	Ring—Case Wear Ring	A2-3026	A2-3015	A2-3027
14.	Ring—Head Wear Ring	A2-3016	A2-3016	A2-3016
15.	Nut—Impeller	A2-3691	A2-3691	A2-3691

NOTES: 1. NON-STANDARD pump parts are not shown. When ordering repair parts, refer to page 1 of this catalog.
2. * = These parts are required when replacing shaft seal.

DUNHAM-BUSH

AIR CONDITIONING, REFRIGERATION, HEATING PRODUCTS AND ACCESSORIES

MAIN OFFICES AND FACTORIES

MAIN OFFICES
175 South Street
West Hartford, Connecticut
06110

WEST HARTFORD DIVISION
179 South Street
West Hartford, Connecticut
06110

HARRISONBURG DIVISION
101 Burgess Road
Harrisonburg, Virginia
22801

MARSHALLTOWN DIVISION
811 East Main Street
Marshalltown, Iowa
50158

SUBSIDIARIES

DUNHAM-BUSH of Canada Limited
140 Wendell Avenue
Weston, Ontario

DUNHAM-BUSH, LTD.
Fitzherbert Road, Farlington
Portsmouth, Hampshire, England

DUNHAM-BUSH INTERNATIONAL: 175 South Street, West Hartford, Connecticut 06110, U.S.A.
CABLE: DUNBUSH or TELEX: 994469

SALES OFFICES

ALABAMA
Birmingham
Mobile

ARIZONA
Phoenix

ARKANSAS
Little Rock

CALIFORNIA
Arcadia
Los Angeles
San Diego
San Francisco

COLORADO
Denver

CONNECTICUT
Hartford
New Haven

FLORIDA
Jacksonville
Miami
Orlando
Tampa

GEORGIA
Atlanta

HAWAII
Honolulu

ILLINOIS
Chicago
Peoria
Rockford

INDIANA
Indianapolis
Michigan City

IOWA
DesMoines

KANSAS
Lenexa

KENTUCKY
Louisville

LOUISIANA
New Orleans
Shreveport

MAINE
Lewiston

MARYLAND
Baltimore
Silver Spring

MASSACHUSETTS
Boston
Springfield

MICHIGAN
Detroit
Grand Rapids
Kalamazoo

MINNESOTA
Minneapolis

MISSISSIPPI
Jackson

MISSOURI
Kansas City
St. Louis

MONTANA
Billings
Great Falls

NEBRASKA
Omaha

NEW JERSEY
Little Falls
South Amboy
Union

NEW MEXICO
Albuquerque

NEW YORK
Albany
Buffalo
New York City
Rochester
Syracuse

NORTH CAROLINA
Charlotte
Greensboro

OHIO
Akron
Cincinnati
Cleveland
Columbus
Dayton
Delaware
Toledo

OKLAHOMA
Oklahoma City
Tulsa

OREGON
Portland

PENNSYLVANIA
Harrisburg
Philadelphia

PENNSYLVANIA (Cond't)
Pittsburgh
Pittston

RHODE ISLAND
Providence

SOUTH CAROLINA
Columbia
Greenville

TENNESSEE
Chattanooga
Memphis
Knoxville
Nashville

TEXAS
Austin
Corpus Christie
Dallas
Fort Worth
El Paso
Houston
Lubbock
San Antonio

UTAH
Salt Lake City

VIRGINIA
Alexandria
Richmond

WASHINGTON
Seattle
Spokane

WEST VIRGINIA
Barboursville

WISCONSIN
Milwaukee

DUNHAM-BUSH, INC. • West Hartford, Connecticut 06110, U.S.A.

2505B-7.5M-567A-1177B

one of The Signal Companies

FORM NO. 17448P
EFFECTIVE
MARCH 1981
SUPERSEDES 17448N

DUNHAM-BUSH

A5, A7, PM7 and A9 CENTRIFUGAL PUMP REPAIR PARTS LIST PRICES

PRICES AND SPECIFICATIONS SUBJECT TO CHANGE WITHOUT NOTICE.
FOR TERMS OF SALE REFER TO LATEST REVISION OF FORM 1278

REFER TO FORM 2505 FOR DESCRIPTION OF PARTS AND NUMBERS

PART NUMBER	LIST PRICE
472	$ 25.05
860	63.10
861	73.40
1112	.70
3179	80.20
3199	103.00
3291	148.00
3292	2.30
3293	2.35
3312	2.30
3313	1.75
A2-51	73.40
A2-672	43.45
A2-3015	45.90
A2-3016	45.90
A2-3018	24.10
A2-3020	1.20
A2-3021-1	5.60
A2-3021-2	16.85
A2-3022-1	1.20
A2-3022-2	5.85
A2-3023	1.20
A2-3025	57.20
A2-3026	45.90
A2-3027	45.90
A2-3028	45.90
A2-3029	5.90
A2-3379	5.45
A2-3691	12.10
A2-3898	32.90
A2-3905	73.90
C2-73 x 6-1/16	276.00
C2-73 x 6-9/16	276.00
C2-73 x 6-3/4	276.00
C2-73 x 7-5/16	276.00
C2-73 x 8-7/16	276.00
C2-73 x 9	276.00
C2-2335	218.00
C2-2336	172.00
C2-2337	183.00
C2-2339	310.00
C2-2340	264.00
C2-2342	91.05

PART NUMBER	LIST PRICE
C2-2344	$264.00
C2-2345	310.00
C2-2346	344.00
C2-2347	344.00
C2-2376	495.00
C2-2377	286.00
C2-2378	240.00
C2-2379	255.00
C2-2380	276.00
C2-2381	293.00
C2-2382	293.00
C2-2383	428.00
C2-2384	179.00
C2-2385	436.00
C2-2386	160.00
C2-2387	436.00
C2-2388	160.00
C2-2389	323.00
C2-2390	268.00
C2-2392	339.00
C2-2498	311.00
C2-2659	499.00
C2-2660	504.00
C2-2661	538.00
C2-2662	550.00
C2-2663	550.00
C2-2664	563.00
C2-2665	142.00
C2-2666	756.00
C2-2667	779.00
C-7763	1.50
C8709	1.20
C8854	2.55
C8930	9.20
C8938	7.35
C8958	12.90
C10025	12.30
C10035	3.00
C10037	15.15
C10038	15.15
C10060	15.15
C10061	15.15

PART NUMBER	LIST PRICE
C10062	$ 10.80
C10063	10.80
C10063SS	40.70
D2-74	765.00
D2-76	797.00
D2-77	550.00
D2-78	611.00
D2-79	918.00
D2-80	918.00
D2-1255	424.00
D2-1256	300.00
D2-1265	469.00
D2-1266	368.00
D2-1267	469.00
D2-1268	310.00
D2-1269	469.00
D2-1270	355.00
D2-1271	687.00
D2-1272	344.00
D2-1273	687.00
D2-1274	332.00
D2-1275	883.00
D2-1276	412.00
D221299	310.00
D2-1300	469.00
D2-1301	300.00
D2-1302	469.00
D2-1303	368.00
D2-1304	469.00
D2-1305	412.00
D2-1306	687.00
D2-1307	412.00
D2-1308	1,833.00
D2-1346	861.00
D2-1347	1,148.00
D2-1348	1,148.00
D2-1349	1,148.00
D2-1350	1,261.00
D2-1351	1,261.00
D2-1352	1,147.00
D2-1353	1,147.00

PART NUMBER	LIST PRICE
·1354	$1,147.00
·1355	1,147.00
D2-1356	1,147.00
D2-1357	1,147.00
D5193 x 4-5/16	91.65
D5193 x 4-9/16	91.65
D5193 x 5	91.65
D5195 x 4-1/2	91.65
D5197 x 3-5/16	91.65
D5197 x 4-5/16	91.65
D5199 x 4-1/8	91.65
D5199 x 4-1/4	91.65
D5202 x 4-1/8	91.65
D5203 x 3 1/8	91.65
D5203 x 3-1/2	91.65
D5203 x 3-7/8	91.65
D5203 x 4-3/16	91.65
D5352	2.85
D5450	6.60
D5478	15.15
E6041	79.35
E6042	61.10
E6046 x 1-1/2	79.35
E6047 x 2	79.35

PART NUMBER	LIST PRICE
E6048	$ 79.35
E6077	134.00
E6078	159.00
E6079	153.00
E6080	185.00
E6081	122.00
E6141 x 5-1/4	257.00
E6141 x 5-7/8	257.00
E6181 x 4-7/16	257.00
E6181 x 4-15/16	257.00
E6181 x 5-15/16	257.00
E6181 x 5-15/32	257.00
E6181 x 6-3/8	257.00
E6181 x 7-3/16	276.00
E6181 x 8-1/4	276.00
E6184 x 3-15/16	257.00
E6184 x 4-1/4	257.00
E6188 x 4-15/16	257.00
E6188 x 5-3/8	257.00
E6188 x 5-9/16	257.00
E6188 x 5-29/32	257.00
E6188 x 6-1/2	257.00
E6188 x 6-5/16	257.00
E6188 x 7-1/16	276.00

PART NUMBER	LIST PRICE
E6188 x 8-7/16	$ 276.00
E6204 x 4-3/4	257.00
E6204 x 5-5/16	257.00
E6204 x 5-21/32	257.00
E6204 x 6-1/8	257.00
E6204 x 6-3/4	257.00
E6204 x 7-15/16	276.00
E6204 x 9	276.00
F539	91.65
F540	137.00
F541	122.00
F544	146.00
F545	153.00
F546	107.00
P2	1.15
P6	1.15
P116	2.30
P142	4.10
P150	1.20
P189	4.10
P190	4.55
P192	1.20
P193	1.75
P194	.75
P195	1.25
P196	1.10
1/8" OD Copper Tube	.60

C2-3211 x 6 1/16"	$ 276.00
C2-3211 x 6 9/16"	276.00
C2-3211 x 6 3/4	276.00
C2-3211 x 7 15/16"	276.00
C2-3211 x 8 7/16"	276.00
C2-3211 x 9"	276.00
C2-3212 x 5 1/4 "	257.00
C2-3212 x 5 7/8"	257.00
C2-3212 x 6 1/16"	257.00
C2-3213 x 4 7/16"	257.00
C2-3213 x 4 15/16	257.00
C2-3213 x 5 15/32"	257.00
C2-3213 x 5 9/16"	257.00
C2-3213 x 5 15/16"	257.00
C2-3213 x 6 3/8"	257.00

C2-3213 x 7 3/16"	$276.00
C2-3213 x 8 1/4 "	276.00
C2-3214 x 4 15/16"	257.00
C2-3214 x 5 3/8 "	257.00
C2-3214 x 5 29/32"	257.00
C2-3214 x 6 5/16"	257.00
C2-3214 x 6 1/2 "	257.00
C2-3214 x 7 1/16"	276.00
C2-3214 x 8 7/16 "	276.00
C2-3215 x 4 3/4 "	257.00

C2-3215 x 5 5/16"	$ 257.00
C2-3215 x 5 21/32"	257.00
C2-3215 x 6 1/8"	257.00
C2-3215 x 7 15/16"	276.00
C2-3215 x 9"	276.00
D2-1478	171.00
D2-1479	458.00
D2-1480	526.00
D2-1481	236.00
D2-1482	596.00
D2-1483	1,078.00

Exhibit 8-4

FORM NO. 6150

SUPERSEDES FORM 6128-1E

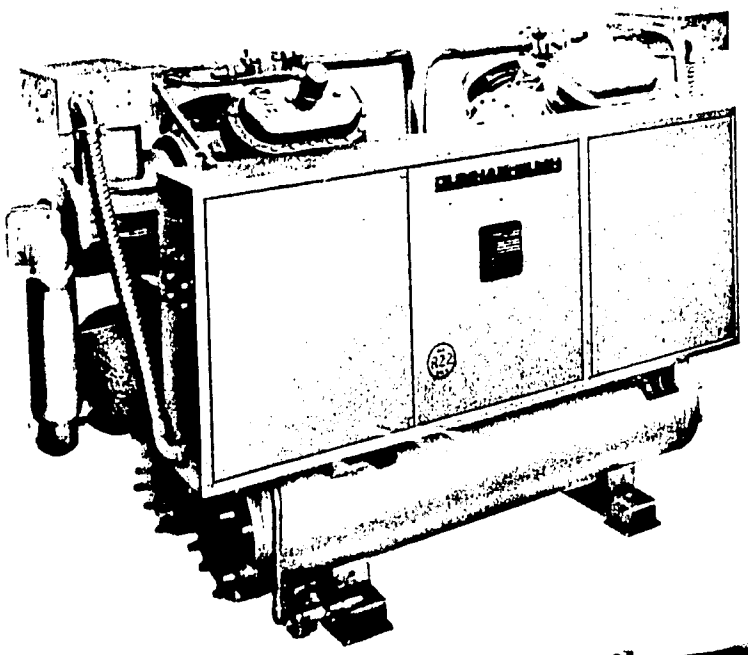

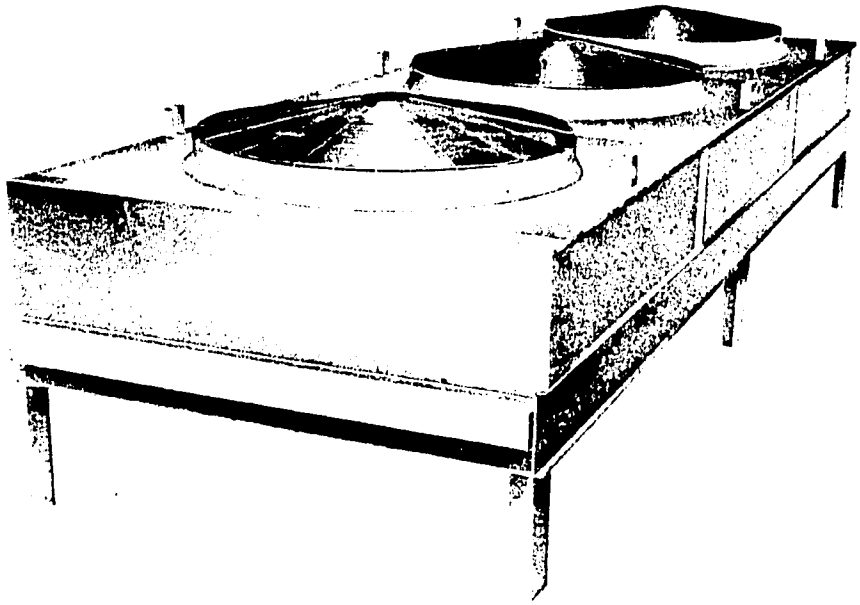

DUNHAM-BUSH

PURCHASE ORDERS

24 HOUR SERVICE

INSTALLATION

AND MAINTENANCE

INSTRUCTIONS

189

INDEX

DESCRIPTIONS	PAGE	DESCRIPTIONS	PAGE
INTRODUCTION	1	MAINTENANCE	11
INSTALLATION	1	SPECIFICATIONS AND PHYSICAL DATA	12-13
OPERATION	6	PRESSURE DROP CURVES	14-15
CONTROLS AND FUNCTIONS	8	PIPING DETAILS	16-17
TYPICAL SCHEMATIC-WATER COOLED	9	ELECTRICAL DATA	18-20
TYPICAL SCHEMATIC-AIR COOLED	10	SERVICE CHART	21

DUNHAM-BUSH RESERVES THE RIGHT TO MAKE CHANGES IN SPECIFICATIONS AND DESIGN WITHOUT NOTICE.

REFERENCES

A long, trouble-free life for these Packaged Chillers can be insured if they are properly applied, installed and maintained. Please consult the latest revision of the following forms for further information.

TITLE	FORM NO.
Packaged Chillers 25 thru 50 tons	6050
Big-4 Compressor and Condenser Unit Installation Instructions	4155
Inner-Fin Water Chillers Installation and Operating Instructions	8110
CSTC Installation Instructions	8144
LSBC Installation & Operating Instructions	7117
Compressor Installation and Cleaning Instructions	4232
Reciprocating Unit Check Out Report	NS1001

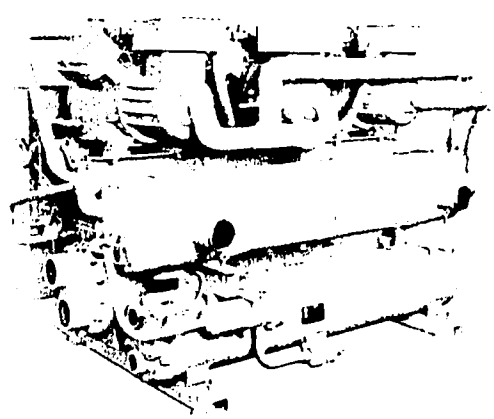

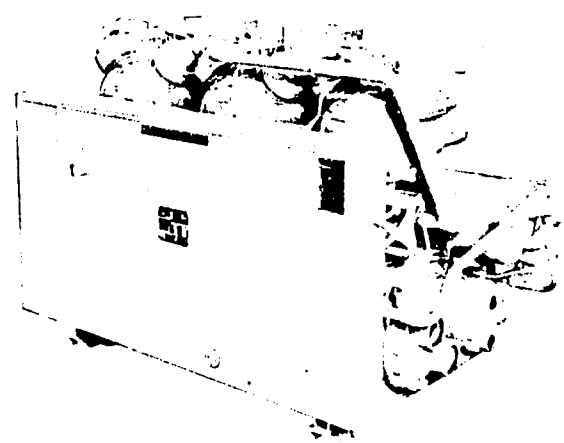

NOMENCLATURE

PCW 025

MODEL IDENTIFICATION
PCW – Packaged Chiller – Water Cooled

NOMINAL TONNAGE
25 thru 150

PCRC 025

MODEL IDENTIFICATION
PCRC – Packaged chiller with remote air cooled condenser.
(1) PCE – Packaged chiller
(1) LSBC* – Low silhouette air cooled condenser (for remote mounting)
*(2) LSBC 075 on model PCRC 150

NOMINAL TONNAGE
25 thru 150

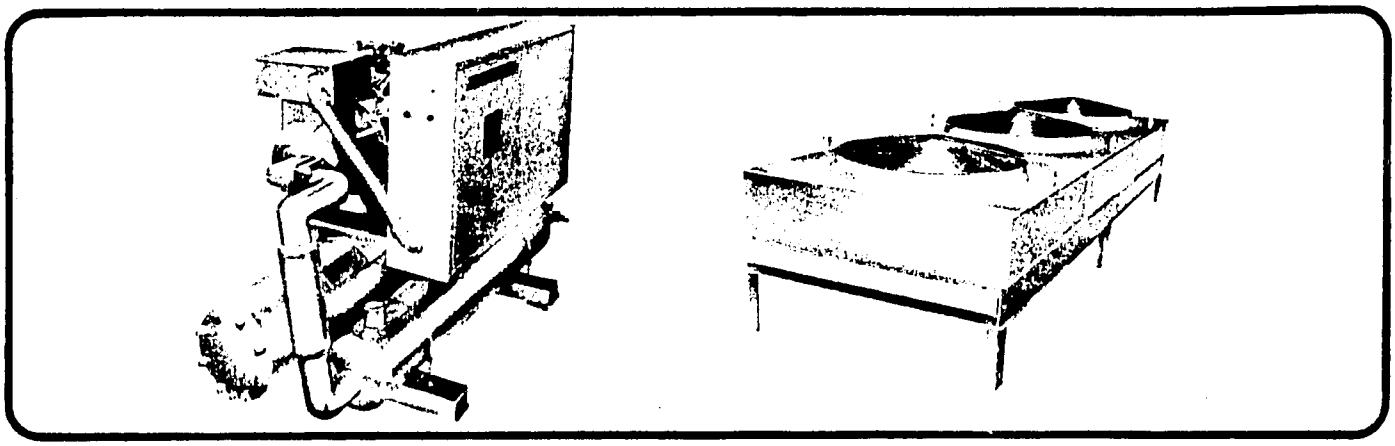

INTRODUCTION

Dunham-Bush PCW Packaged Chiller and PCRC Packaged Chiller systems are easily adapted to air conditioning, process cooling or any other cooling need. These high quality, high performance units, designed with heavy duty Big-4 compressors and efficient inner-fin® chillers, are available in capacities ranging from 25 to 150 tons. The PCW unit includes a cleanable shell and tube water cooled condenser and the PCRC system consists of a PCE Packaged Chiller matched to a remotely mounted LSBC low silhouette air cooled condenser.

All components of these packaged chillers are matched and balanced for high capacity output per unit of power input. Each unit is individually performance-tested at specified field operating conditions, assuring the highest standard of quality, increased reliability and long life. When service is required it is easily accomplished because all components are conveniently located and easily accessible.

Instructions contained herein are suitable for all general applications requiring chilled water. For special applications, such as cooling oils, glycols, alcohols and other non-corrosive substances, contact the Dunham-Bush Representative or the Application Engineering Dept. West Hartford, Ct.

INSTALLATION

—GENERAL—

The PCW Packaged Chillers and PCRC Packaged Chiller systems are built and tested for the purpose of cooling water or other non-corrosive liquids. The chilled water is circulated through a dry expansion chiller where the temperature is dropped to the desired level and the water is then circulated to cooling coils for air conditioning or other types of heat exchangers for process cooling.

Care should be taken to see that the equipment is properly installed and adjusted. An installer or operator should first become familiar with the information contained in this manual. Installation should only be made by a qualified refrigeration mechanic.

—INSPECTION—

When the equipment is delivered the following inspection must be completed in the presence of the carriers representative.

1. Check all crates and cartons received against the Bill of Lading/Shipping Papers to be sure they agree.
2. Check the model number and the electrical characteristics on the nameplate to determine if they are correct.
3. Check for freight damage, shortages or other discrepancies and note them on the delivery receipt before signing.

In the event that any damage is found, a claim should be filed immediately against the delivering carrier. It is the carriers responsibility to pay for any shipping damage.

Save all tags, instructions and shipping receipts, which should be turned over to the person starting the equipment, as they may be needed for reference.

—RIGGING—

PACKAGED CHILLERS - PCW OR PCE

Each Packaged Chiller is carefully tested and crated at the factory where every precaution is taken to assure that the unit reaches you in perfect condition. It is very important that the installer uses the same care in handling. The riggers and movers should use every precaution in moving the equipment into place. Make sure the chains, cables, or other moving equipment are placed so as to avoid damage to the unit or piping. The refrigerant piping should not be used as a ladder or as a hand hold. The skids on which the unit is mounted should not be removed until the unit is at its final location. Do not attach a chain hoist sling to the piping or equipment. Move the unit in an upright position and let it down gently from trucks or rollers.

AIR COOLED CONDENSER —LSBC—

Legs for the air cooled condenser are shipped banded to the skid. Installation of the legs and rigging of the unit are described on page 2.

—SPACE REQUIREMENTS AND CLEARANCE—

Dimensions and clearances for PCW units are given on pages 25 and 26, PCE units, pages 27 and 28, LSBC units page 29. These dimensions are useful for determining space requirements. Minimum clearances for proper air supply for all units can be found on page 3. The unit should be placed to make the clearances noted available for servicing properly. For non-standard units special prints are available, consult the Dunham-Bush representative.

LSBC
LIFTING EYES AND RIGGING

LEG INSTALLATION

NOTE: The unit illustrated is a single fan unit with one pair of lifting eyes. On units of larger size which have two and three sets of lifting eyes, all must be utilized for leg installation and rigging.

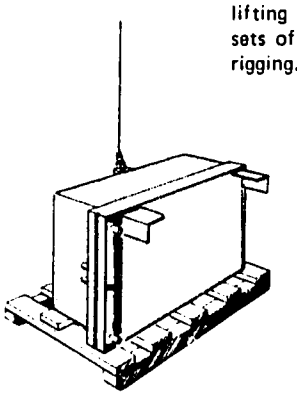

FIG. 1

The Units are shipped (skid mounted) on their side. Prior to removal, the legs should be attached to the top edge of the unit as shown in Figure 1 using fasteners supplied in cloth bag.

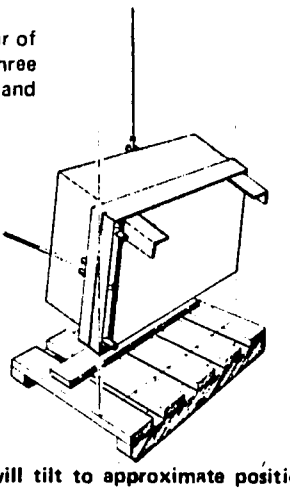

FIG. 2

Raise unit off skid. It will tilt to approximate position as shown in Figure 2. Attach horizontal restraining line. Use small (3/8") nylon rope to prevent swinging.

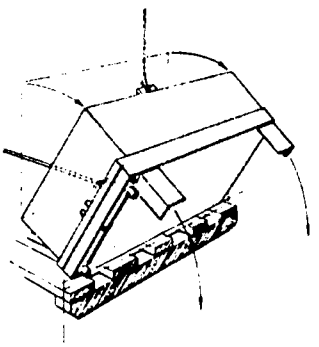

FIG. 3

Lower unit to position shown in Figure 3. Use edge of skid as pivot to prevent damage to coil connection.

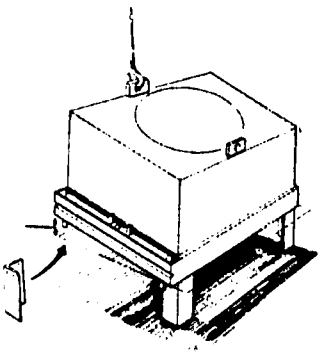

FIG. 4

Attach lifting line to opposite side. Raise unit slightly past horizontal position and attach remaining legs.

RIGGING

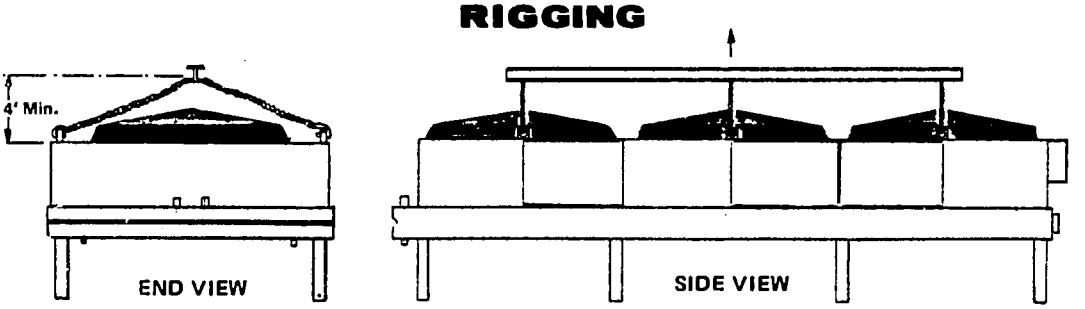

MODELS LSBC-060, 075, 090, 100, 120

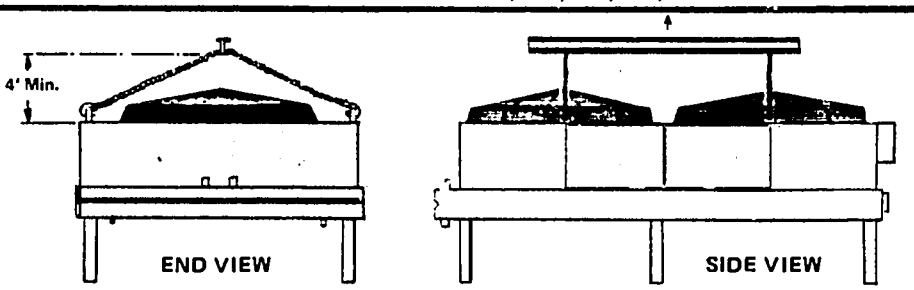

MODELS LSBC-040, 050

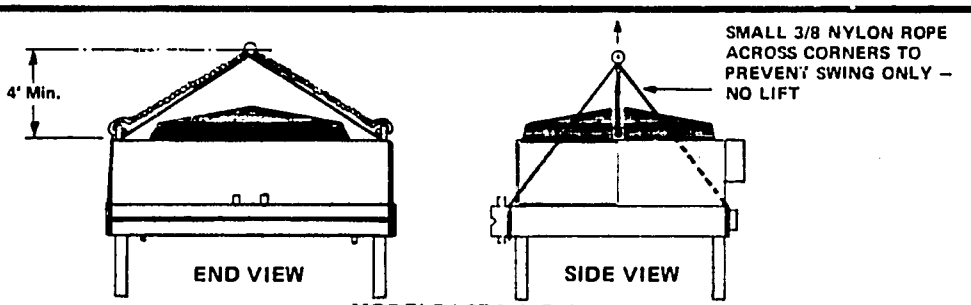

MODELS LSBC-025, 030

NOTE: See Page 18 & 19 for unit weight. Do not slide unit on legs.

INSTALLATION

LSBC SPACE AND LOCATION REQUIREMENTS

The most important consideration which must be taken into account when deciding upon the location of air cooled equipment, is the provision for a supply of ambient air to the condenser, and removal of heated air from the condenser area. Where this essential requirement is not adhered to, it will result in higher condensing temperatures, which cause poor operation, higher power usage and possible eventual failure of equipment. Units must not be located in the vicinity of steam, hot air, or fume exhausts.

Another consideration which must be taken is that the unit should be mounted away from noise sensitive spaces and must have adequate support to avoid vibration and noise transmission into the building. Units should be mounted over corridors, utility areas, rest rooms and other auxiliary areas where sound levels are not an important factor. Sound and structural consultants should be retained for recommendations.

WALLS OR OBSTRUCTIONS

The unit should be located so that air may circulate freely and not be recirculated. For proper air flow and access all sides of the unit must be a minimum of four feet away from any wall or obstruction. It is preferred that this distance be increased whenever possible. Care should be taken to see that ample room is left for maintenance work through access doors and panels. Overhead obstructions are not permitted. When the unit is in an area where it is enclosed by three walls the unit must be installed as indicated for units in a pit.

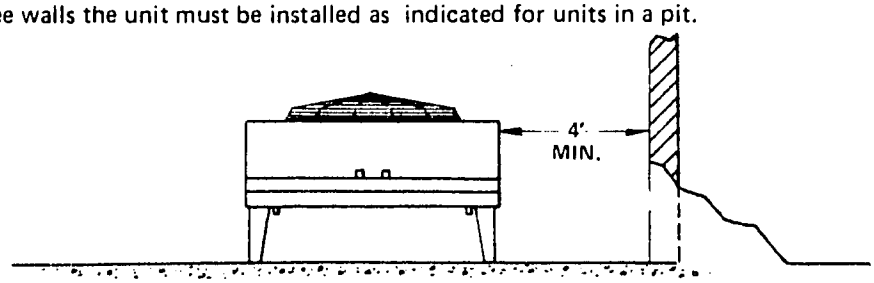

MULTIPLE UNITS

For units placed side by side, the minimum distance between units is 8 feet. If units are placed end to end, the minimum distance between units is 4 feet.

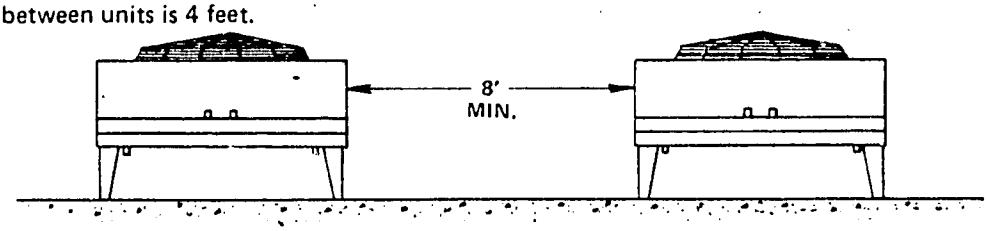

UNITS IN PITS

The top of the unit should be level with the top of the pit, and side distance increased to 8 feet.

If top of the unit is not level with the top of pit, discharge cones or stacks must be used to raise discharge air to the top of the pit. This is a minimum requirement.

Stacks cannot be used on direct driveunits. Belt drive units must be reinforced internally to support the weight of stacks, and larger fan motors may be required.

Contact your local Dunham-Bush representative for details.

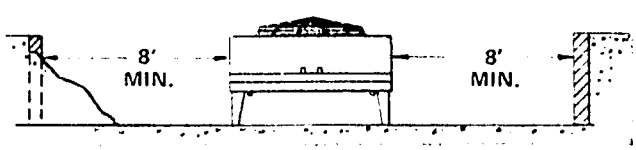

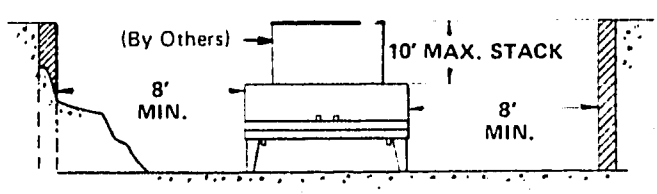

DECORATIVE FENCES

Fences must have 50% free area, with a 1 foot undercut, a 4 foot minimum clearance, and it must not exceed the top of unit. If these requirements are not met, unit must be installed as indicated for "Units in a Pit".

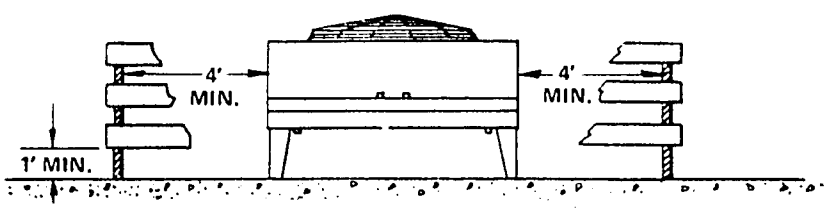

INSTALLATION

–FOUNDATION–

PACKAGED CHILLER – PCW OR PCE

A flat concrete foundation or floor which can support the weight of the equipment must be provided as the unit must be level for proper operation and functioning of controls.

AIR COOLED CONDENSER – LSBC

Foundations must be level for proper operation and functioning of controls and provisions must be made for supporting the individual load points as shown in the unit dimentions on page 29. Roof mounted units must be supported on adequate steel structures. If units are located on the ground level, a concrete base is recommended.

–VIBRATION ISOLATION–

Under certain critical conditions it may be necessary to install vibration isolators under the base of the Packaged Chiller and the Air Cooled Condenser.

Rubber-in-shear or spring vibration isolators are offered as optional items for the PCW and PCE Packaged Chiller. When Unit Vibration Isolators are used, flexible connectors (piping vibration absorbers) must be installed in the water piping system of the PCW unit and in the refrigerant lines of the PCRC system. Note: These flexible connectors must be suitable for the fluid and pressures involved.

When using flexible connectors in the PCRC system, they must be mounted in the refrigerant discharge and liquid lines close to the PCE packaged chiller, in a horizontal position and parallel to the compressor crankshaft.

All piping which is external of the packaged chiller must be supported by spring mounted hangers and any piping which goes through the wall, ceiling or floor must be properly sheathed to prevent transmission of piping vibration to the structure.

–EXTERIOR CONNECTIONS–

PCW OR PCRC

1. Water Connections
Chiller water piping

After the unit has been leveled, the external water piping may be made up. Be sure water piping is connected to the correct fittings. The water-out connection is closest to the expansion valve (R-in) end.

Water flow through the chiller must remain constant for proper chiller operation. Water pressure gauges are recommended to check the water pressure and flow rate in the system, before and after the chiller, and to determine if variations occur in the chiller and system.

When installing pressure taps to measure the amount of pressure drop across the water side of the chiller, the taps should be located a minimum of twenty-four (24) inches downstream from any connections (flange, elbow, etc.). Installation of the operating thermostat used in conjunction with pressure taps is shown on page 10.

There are many piping and control systems which may be used to assure constant water flow through the chiller. A typical system is shown in Figure 1. It uses a three way motorized valve which operates in response to the discharge air temperature of the cooling coil.

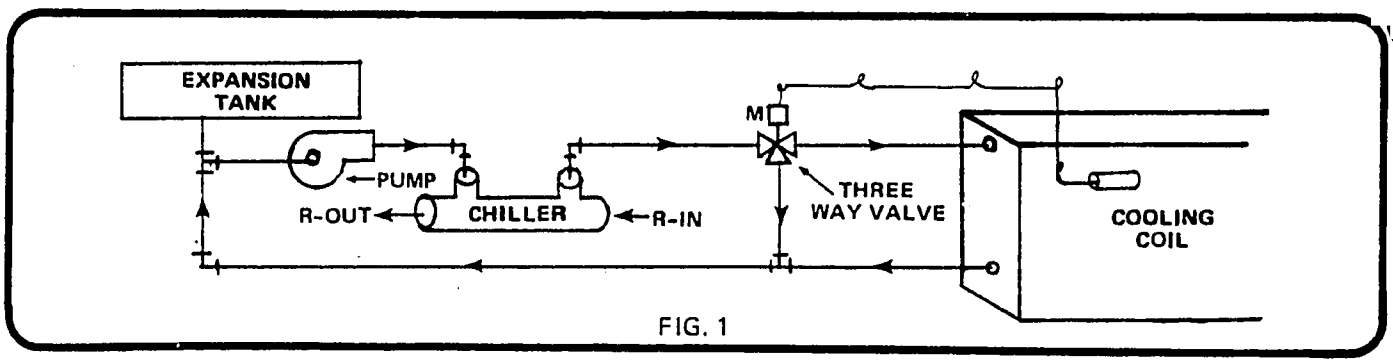

FIG. 1

Another system which is sometimes used consists of a two way modulating control valve, which also responds to the discharge air temperature of the cooling coil, used in conjunction with a spring loaded bypass regulating valve as shown in Figure 2. The bypass valve must be set to assure the full flow of circulating chilled water when the modulating valve is completely closed.

Other systems are noted in the ASHRAE Handbook and may serve equally well. Whatever system is selected, water flow must be constantly maintained through the chiller.

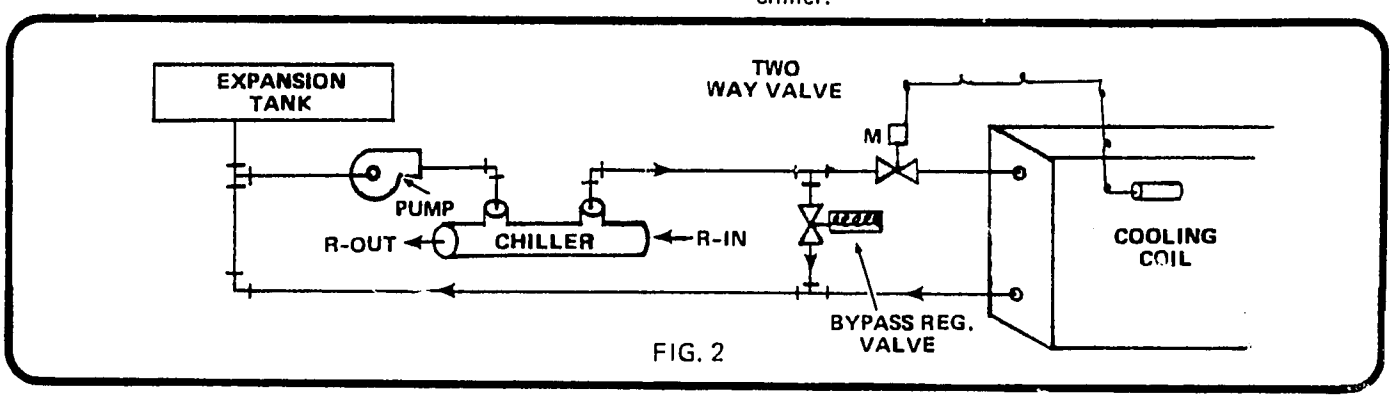

FIG. 2

If the system is arranged for the dual purpose of cooling in the summer and heating in the winter, the chiller must be valved off during the heating season so that hot water will not pass through the chiller. This may be either a manual or automatic change-over operation. There are also times, such as early spring and late fall, when both heating and cooling are required. This should also be considered when designing heating and cooling systems. For various piping arrangements consult the ASHRAE Handbook.

2 - WATER CONNECTIONS -

A. DUAL CHILLER PACKAGED UNITS

Packaged chillers with dual chillers should be piped in a manner to provide the maximum heat transfer. Shown in figure 3 are the recommended methods for units with dual chillers.

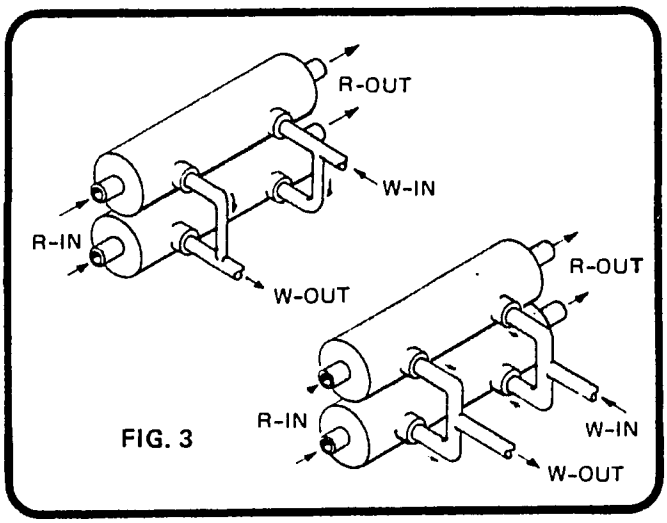

FIG. 3

B. MULTIPLE PACKAGED CHILLERS

Multiple unit packaged chillers have been sucessfully applied to parallel and series piping systems for years. Special attention, however, must be given to the particulars involved for each application or serious operational problems can result.

The following are guidelines which should be followed for multiple unit application.

Note: A constant chilled water flow rate is assumed to be maintained through all chillers.

1. Parallel Chilled Water Flow Units

Method a. Both units operate simultaneously, modulating with load variations. Each packaged chiller operating thermostat senses return water temperature using standard controls (See Figure 4). The set point of each thermostat will be set to maintain the desired steps of unloading. The

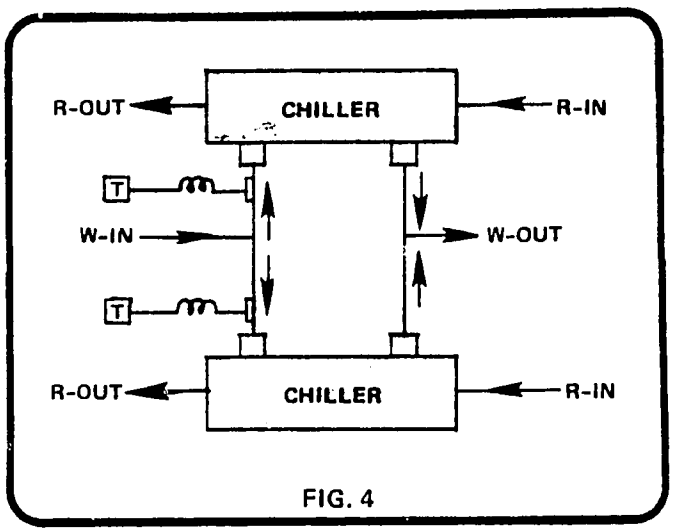

FIG. 4

steps of unloading for the system, therefore, are equal to the total number of steps on both units. This will result in very stable operation and temperature control, and is preferred by most engineers.

Method b. Install units the same as Method a. but add a third thermostat in the return water, as shown in Figure 5. This thermostat will be set to cycle off one of the units when the load drops below 50%. When this condition is reached, leaving mixed water temperature will rise, causing the return water temperature to rise and the unit operating will load up. The "off" unit is sequenced to start again before full system load temperature is reached.

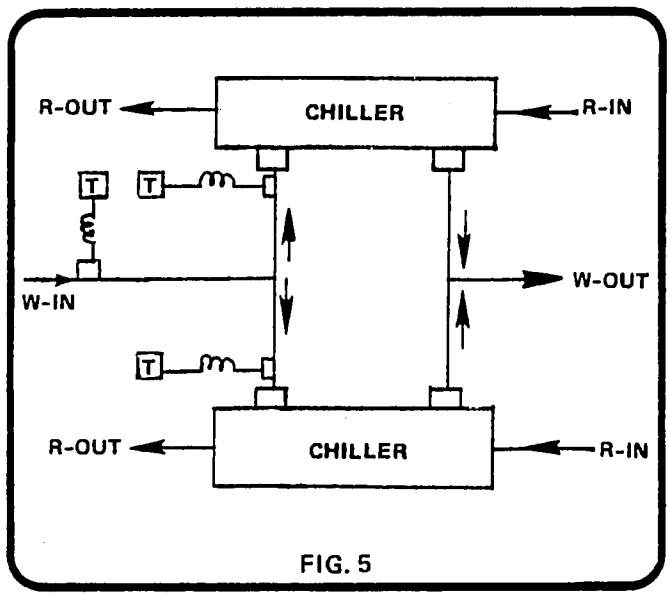

FIG. 5

This system will not provide as stable an operation as Method a, but in normal air conditioning applications, this is not detrimental. The advantage to Method b is a better part load efficiency and also a lead-lag control can be added without much trouble.

2. Series Chilled Water Flow Units

Units should be equally sized. The upstream unit will carry a larger load because it cools higher temperature water. The thermostats are to sense inlet water temperatures (See

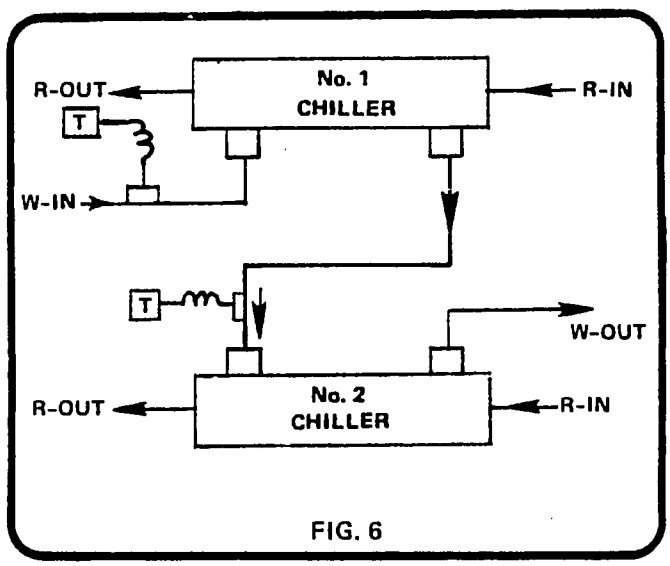

FIG. 6

Figure 6). The Number 1 unit thermostat will unload and cycle off the packaged chiller before the first step of unloading occurs on the Number 2 unit.

3 - CONDENSER WATER PIPING

A relatively constant condensing temperature (compressor head pressure) should be maintained. The supply water temperature and flow rate must, therefore, be controlled to maintain this constant condensing temperature over the wide load and operating range of the packaged chiller. Typical arrangements are shown below. Valve manufacturers recommendations should be followed.

A. City Water

If city water is used, then, for economic reasons as well as to maintain a level head pressure, a water regulating valve should be used. This will meter only as much water as is necessary to maintain a given condensing temperature. One valve must be provided for each condenser, and they should be piped as shown in figure 7.

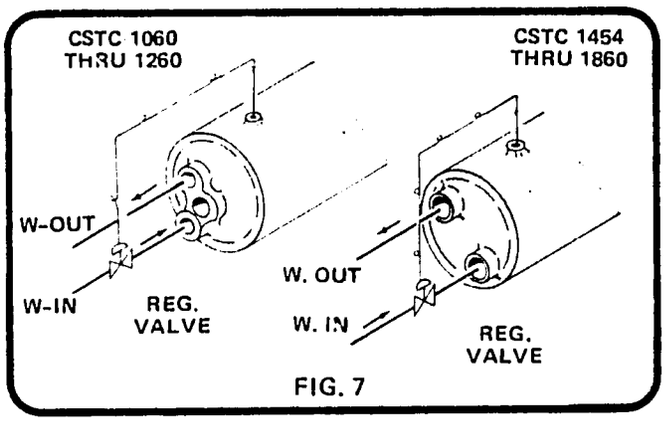

FIG. 7

B. Tower Water

If a cooling tower is supplying the condenser water, then some means to maintain a constant water supply temperature should be employed.

There are a number of different methods; e.g., cycling the tower fan off and on through a thermostat sensing the cooling tower sump water; temperature dampers controlling air flow (may also be used in conjunction with fan cycling) or by-passing all or part of the return water directly to the sump via a 3-way valve actuated by a controller sensing sump temperature.

The most stable compressor operation can be obtained with a water regulating valve modulating the water flow to the condenser, controlled by the condenser pressure. A typical connection is depicted in figure 8.

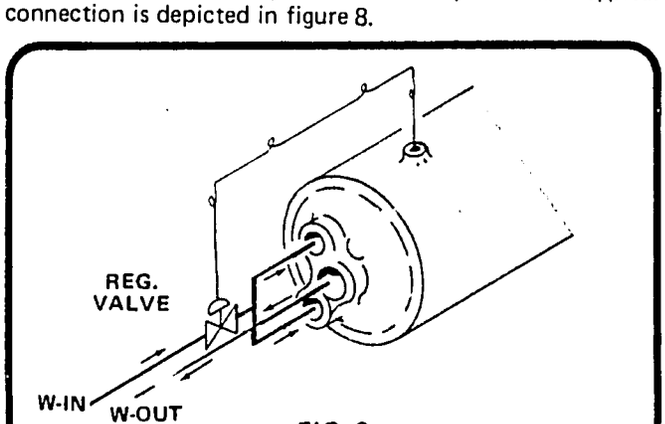

FIG. 8

On a single compressor system, with a 2-way valve, the water flow could be restricted to a point where the tower would operate inefficiently (nozzles clogging and insufficient wetted surface). A 3-way water regulating valve on this system would provide not only proper head pressure control, but a constant flow to the tower for better tower efficiency.

The valve manufacturer's recommendations for piping should be followed. A typical arrangement is shown in figure 9.

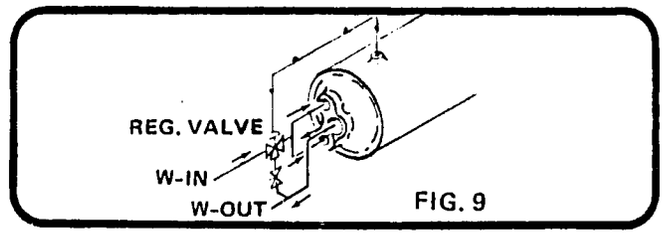

FIG. 9

Cool Weather Operation

If a system is to be operated in a cold climate (below 32°F ambient), some provision, must be made to keep the cooling tower from freezing. Sump heaters or an indoor sump are two examples of how this can be accomplished. Consult the tower manufacturer for recommendations.

TYPICAL PIPING FOR MULTIPLE CONDENSER PCW UNITS

On multiple condenser systems using a single cooling tower, 2-way regulating valves can be used for each condenser effectively, because usually there is sufficient water flow to the tower to maintain efficient tower operation. See figure 10 If automatic water regulator valves are used they should be installed as shown. Manual hand regulating valves may be used and installed in the same location. Water flow, however, should be balanced for equal head pressure.

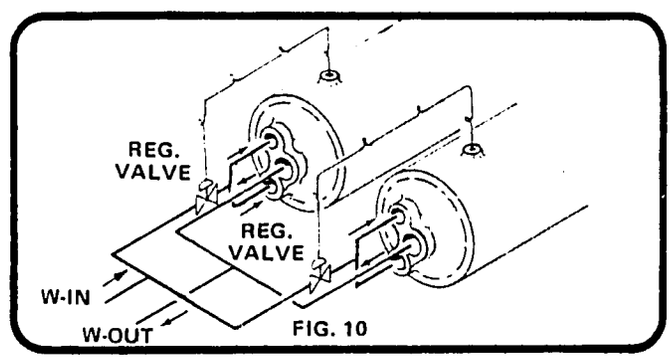

FIG. 10

4 - REFRIGERANT CONNECTIONS - PCW OR PCRC

The PCW unit does not require any field installed refrigerant piping.

The PCRC system requires connection to the liquid and discharge lines of the PCE unit to the LSBC air cooled condenser. When making connections to the LSBC condenser, all refrigerant piping practices should be in accordance with local and state codes and the latest ANSI-B9.1 safety code standards. Hard drawn type L or K copper tubing should be used with remote air cooled condenser systems. Soft tubing, where bending is required, may be used providing it is protected in accordance with the local code restrictions.

Be sure the coil is properly tagged before starting to pipe the unit.

A. Hot Gas Discharge Lines

Careful consideration must always be given to sizing refrigerant discharge lines to insure that gas velocities are high enough to carry oil. The velocities cannot be so high, however, as to cause an excessive pressure drop. For sizing lines refer to Compressor Piping Manual Form No. 4120.1 or ASHRAE Guide.

The discharge line must be arranged to insure the proper drainage of the oil being carried in the line. A horizontal run should be pitched away from the compressor (towards the condenser) approximately 1/4" per foot. Since oil will drain down a vertical riser when the compressor is not operating, a trap should be provided which will prevent the oil

from draining back to the compressor. This trap will also collect liquid refrigerant which condenses in the vertical riser during the off cycle. This function of the trap is especially important where the receiver is located in a warmer location than the vertical discharge line. This trap should be installed in the horizontal discharge line from the compressor and have a depth of approximately 18 inches. In view of compressor vibration, provision should be made in the discharge line to allow for the required flexibility. When vertical lift exceeds 20 feet, insert close-coupled traps in riser at every 10 feet. The horizontal width of the trap should be kept to a minimum and can be made up of standard 90° elbows. Refer to "Refrigerant Piping Details for Lift Traps" on page 10.

When a remote air cooled condenser is installed on a system utilizing capacity control, it is recommended that dual discharge line risers be installed. The main riser should be sized for the maximum system capacity less the lowest system capacity. The secondary riser should be sized for the lowest system capacity. A trap should be provided in the main riser as shown for base of dual riser in the piping details on Page 10. When installed in this manner, at maximum capacity, hot gas will flow through both risers. When operating at minimum capacity, oil will trap in the main riser and hot gas will flow through the secondary riser at the required velocity.

At the top of all vertical risers, whether single or dual riser, a reverse trap should be installed. Since all horizontal hot gas lines should pitch toward the condenser, the top of the reverse trap should be the highest point in the hot gas circuit and a purge valve should be installed. Refer to Refrigerant Piping diagrams on pages 9 and 10.

Flooding type head pressure control valves may be installed at any point after the vertical riser(s) piping, and located lower than the condenser outlet, wherever it is most convenient. For the least amount of piping, the valves should be located near the receiver.

The discharge line piping for a multiple compressor installation, where each compressor connects to a separate circuit of the condenser, should be handled in the same manner as indicated above for a single circuited unit. Refer to Typical Piping, Pages 9 and 10.

B. Liquid Line

Most installations require only a seal pot type receiver; however, low ambient operation (down to -20°F) will require a full size receiver and head pressure control assembly which can be supplied. Instructions for mounting and installing the receiver can be found on page 8 and are also included with the unit. Typical piping diagrams can be found on page 9. These diagrams are to be used as a guide. For more detailed information or if there are any questions because of unusual application or circumstances, consult your local Dunham-Bush Representative. The sizing of the piping is critical for efficient operation of the unit. The ASHRAE Handbook should be used to determine the correct sizes and the latest information on piping practices.

5 - ELECTRICAL CONNECTIONS - PCW & PCRC

PCW and PCRC's are wired as completely as possible at the factory prior to the delivery. The connections which must be made by the installer are to the main power source, control power source, starting equipment and interlocking the satellite equipment. Additionally, on the PCRC system, the LSBC condenser must be connected with the PCE unit. Typical wiring schematics are shown on pages 14 and 15. They are typical only and do not apply in all cases. Each of these circuits must have adequate circuit protection devices incorporated in it. The power supply voltage, frequency, and phase must be in accordance with that shown on the unit nameplate. Minimum circuit ampacity and maximum fuse size are shown on the wiring schematics for the PCW, PCE and LSBC.

All wiring must be in accordance with the wiring diagram specified on the unit nameplate, the National Electrical Code, and any local codes that may apply. Any deviations from the above requirements must have the prior approval of Dunham-Bush, Inc.

CHARGING PROCEDURE

The 'PCW' unit is charged at the factory with the refrigerant for which it was designed. The type of refrigerant is shown on the nameplate. The PCE unit of the PCRC system has a holding charge of the refrigerant shown on the nameplate, the LSBC condenser has a holding charge of dry nitrogen. Standard units use refrigerant R-22.

When the unit is charged on the jobsite it should be done by a licensed refrigeration mechanic. For pressure testing and system evacuation consult the latest revision of Form 4232.

CHARGING FOR PCRC SYSTEM

Attach a drum of refrigerant to the backseating port of the liquid line valve. Purge the charging line to remove air, invert the drum and open it to the system. A set of scales should be used to weigh the drum before and after charging to determine the weight of refrigerant charged into the system.

Open the charging valve so that the liquid refrigerant will pass into the receiver, condenser, and piping. The charging should continue until the charge specified on pages 18 and 19 has been put into the system. This charge is estimated and will vary from system to system depending upon the location of the PCE unit in respect to the LSBC air cooled condenser.

If the unit is equipped with a large receiver plus condenser flooding valves and is void of refrigerant the amount of refrigerant for the flooded system (opt. 3) as shown on Pages 18 or 19 should be added. After the initial charge is completed, open all system valves and let the compressor run. Be sure that all directions given under initial start-up have been followed. Observe the liquid sight glass to see if there are any bubbles present. If bubbles are present it will be necessary to add more refrigerant. This can be done by standing the drum upright and allowing gas to be drawn in through the service port on the suction line to the compressor. Add gas until the bubbles have completely disappeared and a minimum of 8° sub-cooling is obtained leaving the condenser sub-cooling section.

After the system has been completely charged and the machine is running the system should once again be checked for leaks to make sure that none have occurred during the handling of the eqipment.

No matter how detailed one gets in outlining installation procedures, everything that is done to prepare a system before making it operational is really aimed at arriving at four (4) conditions. These four (4) conditions listed below are vital for good system performance.

(1) Clean System
(2) Dry System
(3) Acid Free System
(4) Free of Non-Condensables

PCRC RECEIVER AND SEAL POT INSTALLATION

SEAL POT RECEIVER INSTALLATION

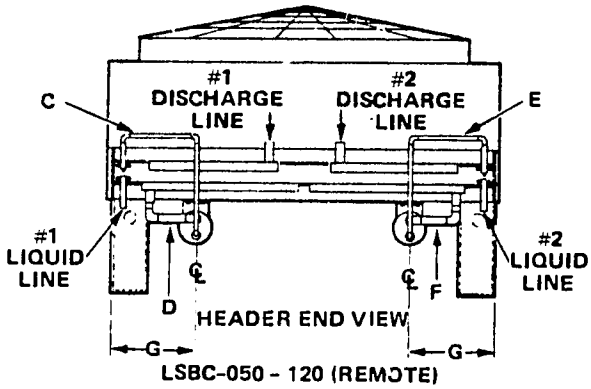

LSBC-050 - 120 (REMOTE)

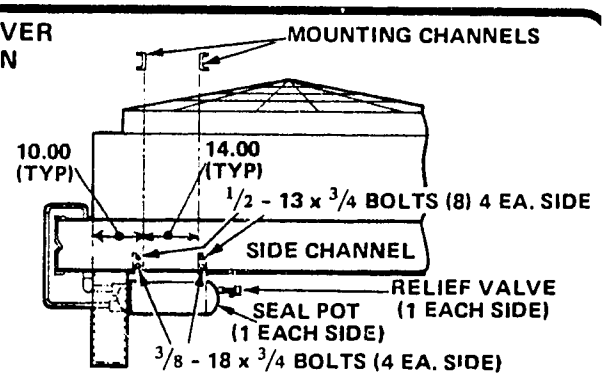

TYPICAL RIGHT SIDE VIEW

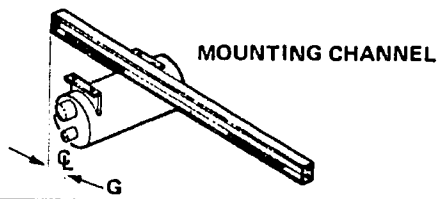

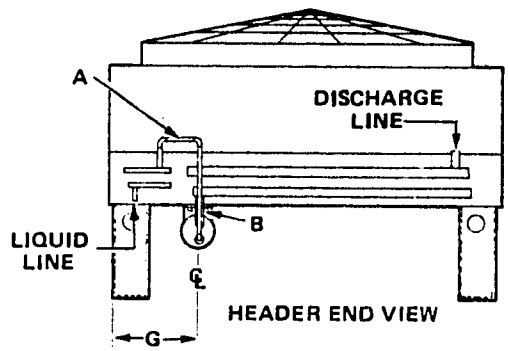

LSBC-025 - 040 (REMOTE)

LINE SIZES (O.D. COPPER) INCHES							
UNIT	A	B	C	D	E	F	G
LSBC-025	1.125	1.625	-	-	-	-	15.75
LSBC-030	1.125	2.125	-	-	-	-	15.75
LSBC-040	1.125	2.125	-	-	-	-	11.62
LSBC-050	-	-	1.125	1.625	1.125	1.625	12.00
LSBC-060	-	-	1.125	2.125	1.125	2.125	12.00
LSBC-075	-	-	1.125	2.125	1.125	2.125	12.00
LSBC-090	-	-	1.125	2.125	1.375	2.625	14.00
LSBC-100	-	-	1.125	2.125	1.375	2.625	14.00
LSBC-120	-	-	1.125	2.125	1.625	2.625	14.00

OPTION #3 RECEIVER INSTALLATION

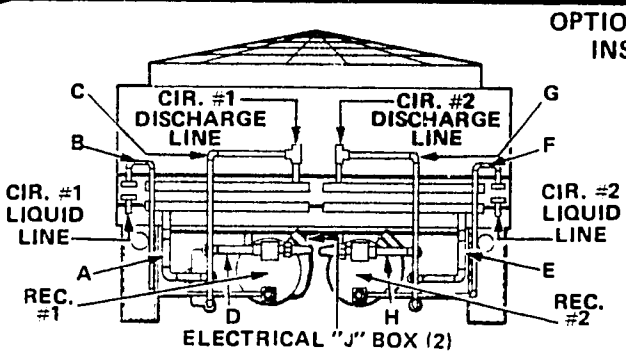

LSBC-050 - 120 (REMOTE)

- THESE MODELS HAVE TWO (2) RECEIVERS AND HEAD PRESSURE CONTROL VALVE ASSEMBLIES.
- RECEIVER #1 AND RECEIVER #2 AND THEIR H.P. CONTROL VALVE ASSY'S ARE SAME SIZE ON LSBC-050, 060 & 075.
- ON LSBC-090, 100 & 120 RECEIVER #2 AND ITS H.P. CONTROL ASSY ARE LARGER.

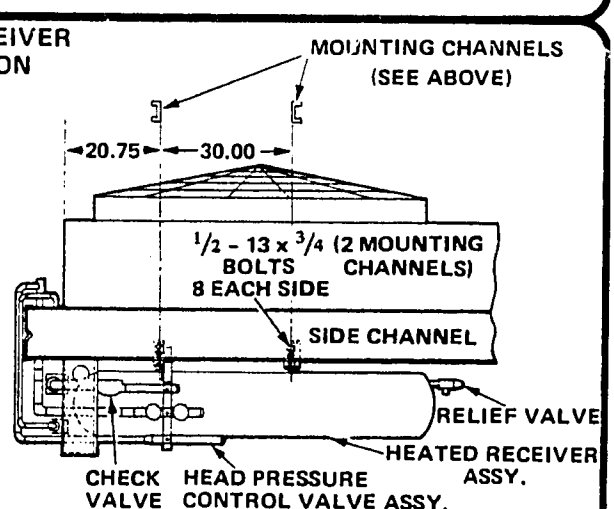

TYPICAL RIGHT SIDE VIEW

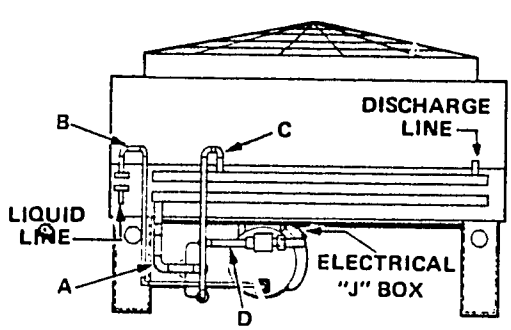

LSBC-025 - 040 (REMOTE)

- THESE MODELS HAVE A SINGLE RECEIVER AND HEAD PRESSURE CONTROL VALVE ASSEMBLY.

	CIRCUIT #1				CIRCUIT #2			
UNIT	A	B	C	D	E	F	G	H
LSBC-025	1 5/8	1 1/8	1 3/8	1 5/8	-	-	-	-
LSBC-030	2 1/8	1 1/8	1 5/8	2 1/8	-	-	-	-
LSBC-040	2 1/8	1 1/8	1 5/8	2 1/8	-	-	-	-
LSBC-050	1 5/8	1 1/8	1 3/8	1 5/8	1 5/8	1 1/8	1 3/8	1 5/8
LSBC-060	2 1/8	1 1/8	1 5/8	2 1/8	2 1/8	1 1/8	1 5/8	2 1/8
LSBC-075	2 1/8	1 1/8	1 5/8	2 1/8	2 1/8	1 1/8	1 5/8	2 1/8
LSBC-090	2 1/8	1 1/8	1 5/8	2 1/8	2 5/8	1 3/8	2 1/8	2 5/8
LSBC-100	2 1/8	1 1/8	1 5/8	2 1/8	2 5/8	1 3/8	2 1/8	2 5/8
LSBC-120	2 1/8	1 1/8	1 5/8	2 1/8	2 5/8	1 3/8	2 1/8	2 5/8

NOTE: Line sizes (O.D. copper) inches.

PCRC - TYPICAL SYSTEM PIPING DETAILS

'PCE' PACKAGED CHILLER WITH REMOTE 'LSBC' AIR COOLED CONDENSER

FIGURE 1 – HEAD PRESSURE CONTROL SYSTEM PIPING FOR STANDARD UNITS AND OPTIONS NO. 1 AND NO. 2

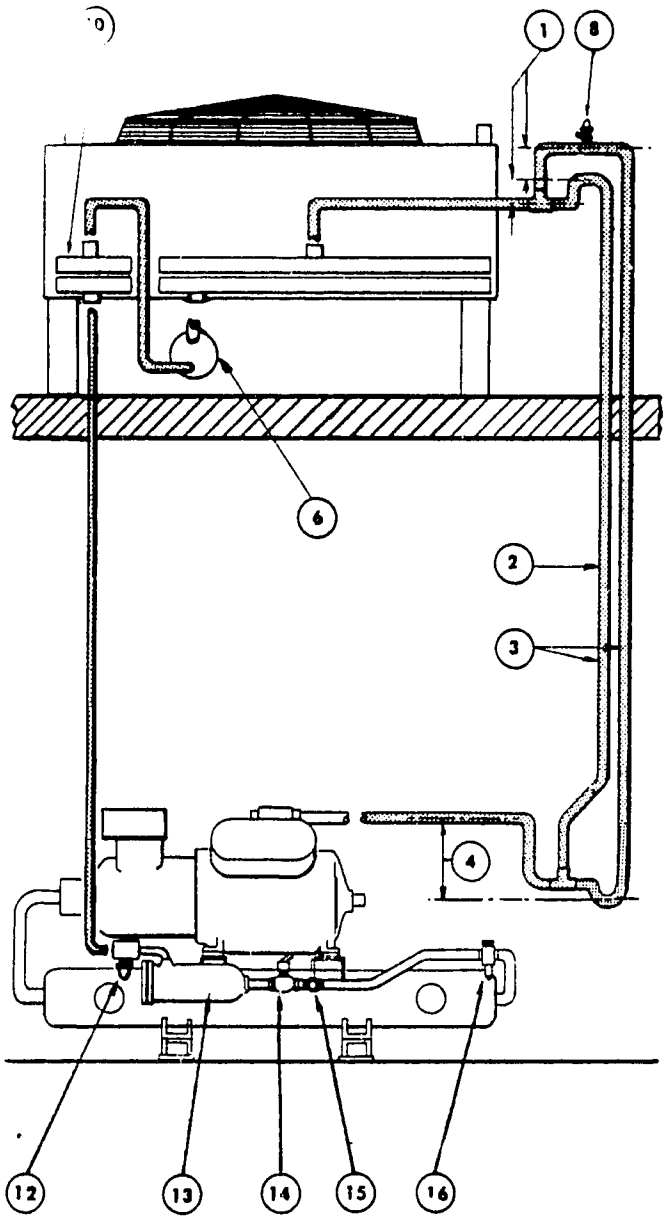

FIGURE 2 – HEAD PRESSURE CONTROL SYSTEM PIPING FOR –20°F LOW AMBIENT, OPTION NO. 3

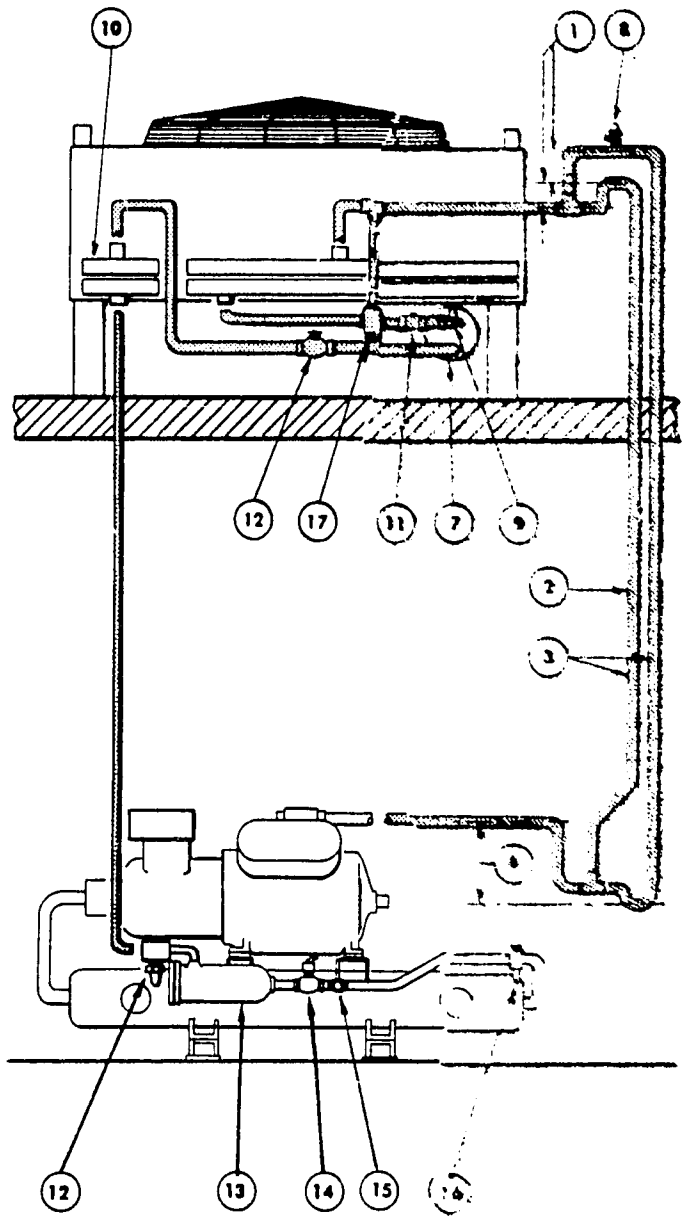

LEGEND AND NOTES

Field Piping

1. "Over Traps" on top of risers must not be less than 6 inches.
2. Dual discharge risers are not required for the single non-unloaded compressor on PCE 050, 060 and 075 models.
3. When vertical lift exceeds 20 feet, insert close-coupled traps in riser at every 10 feet.
4. Trap at compressor should be a minimum of 18 inches.
5. Piping shall follow accepted ASHRAE practice for installation and sizing.
6. Receiver
7. Full operating charge receiver with heater
8. Purge valve
9. Angle hand shut-off valve
10. Subcooling coil
11. Check valve
12. Hand shut-off valve
13. Filter drier
14. Liquid solenoid valve
15. Sight glass
16. Expansion valve
17. Head pressure control valve

FOR DIMENSIONAL INFORMATION FOR 'PCW' AND 'CPR' UNITS REFER TO PAGES 27, 28 & 29

RISER PIPING DETAILS

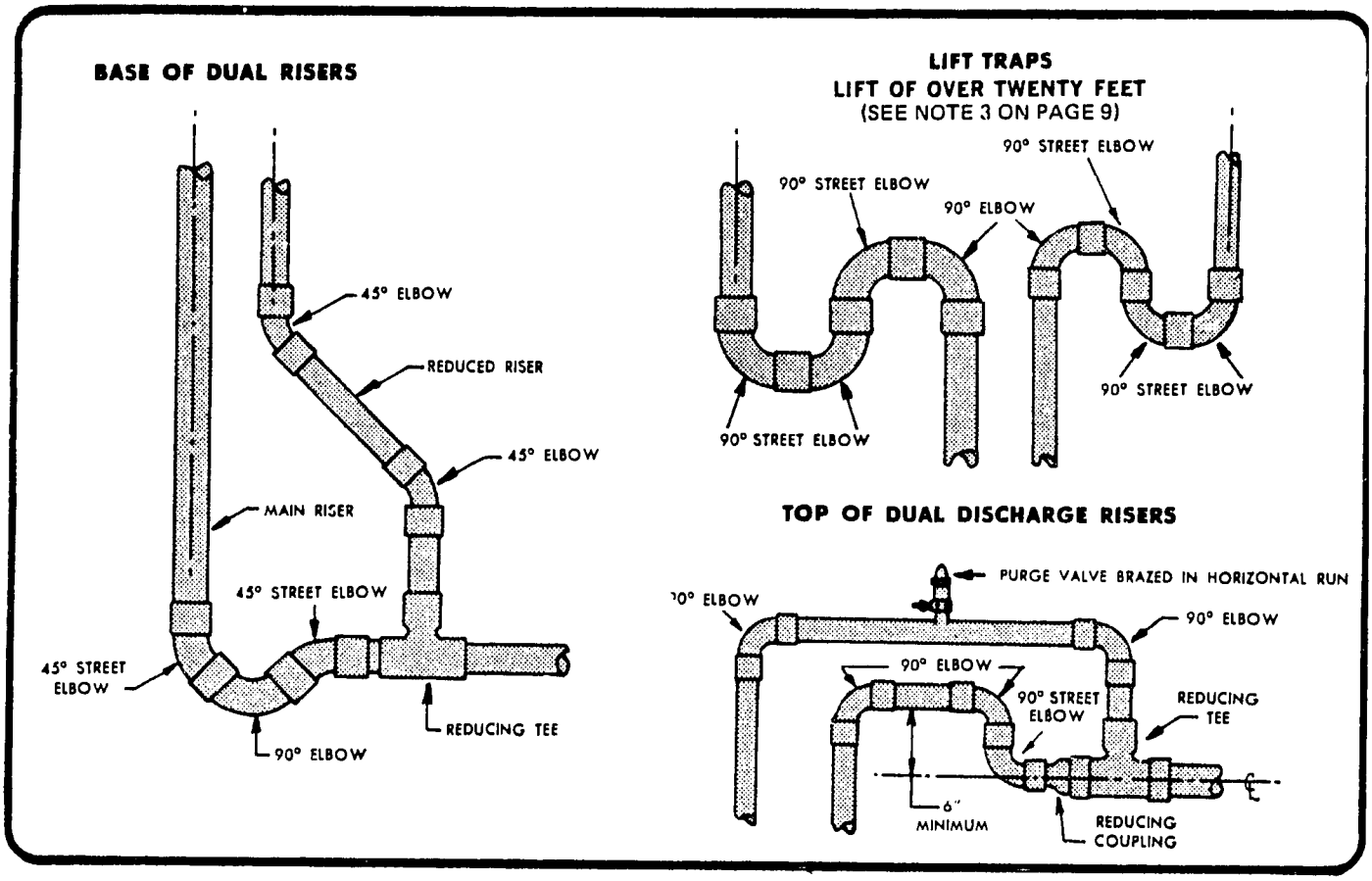

PRESSURE TAP AND BULBWELL LOCATIONS

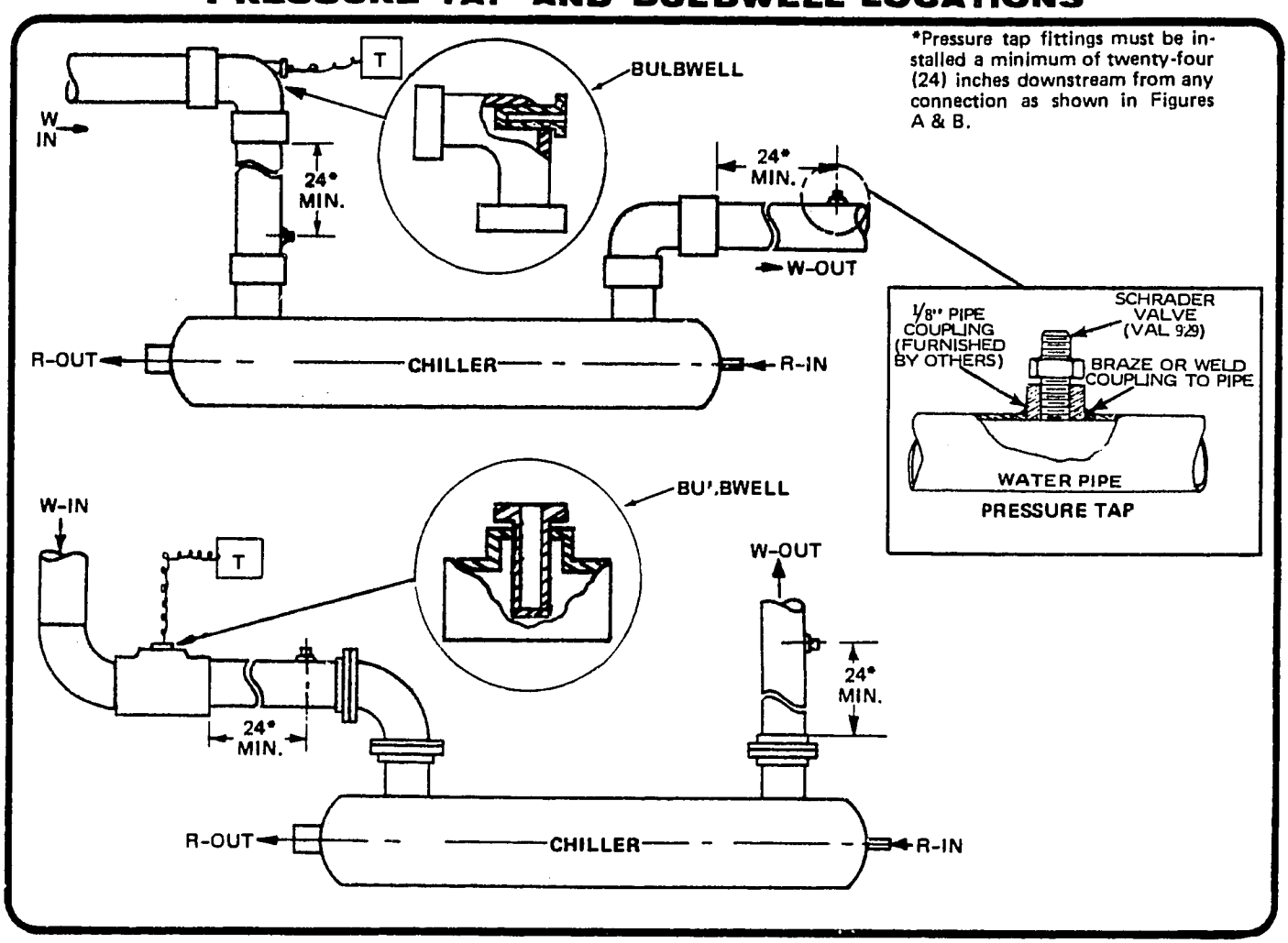

OPERATION

INITIAL START-UP

The unit should be started up only by a refrigeration mechanic who is familiar with accepted operation practices for refrigeration systems.

A newly started unit should not be left unattended. If possible, plan work on an installation so that a mechanic will be present on the job for the first day or two of operation.

Use reciprocating unit check-out report, Form NS1001, to record all temperature, pressure and electrical readings, and control settings. A copy must be forwarded to Dunham-Bush, National Service, West Hartford, Connecticut before the warranty will be honored.

STEP 1

PCW With Water Cooled Condenser

The unit is ready for start-up when the following procedures have been completed.

1. Water piping for the chiller and condenser is installed and tested.
2. Electrical connections are made and properly fused.
3. Unit has been leak tested, leaks corrected, and charge completed.
4. Compressor crankcase heater(s) has been energized for a minimum of 24 hours.
5. Calibrated refrigerant gages have been connected to the suction, discharge and oil pressure ports.
6. Turn on the chilled water pump, check direction of rotation and adjust the water flow through the chiller to the specified flow rate. Bleed off all entrapped air.
7. Check availability of condenser water at the proper flow rate (GPM). Source may be from cooling tower, city water or well. Bleed off all entrapped air.
8. Check all refrigerant valves to be sure they are open.
9. Proceed to Step 2.

PCRC–Packaged Chiller with Remote Air Cooled Condenser

The unit is ready for start-up when the following procedures have been completed.

1. Water piping for the chiller is installed and tested.
2. Refrigerant piping has been installed and the system, which includes the PCE packaged chiller and LSBC condenser, has been leak tested and charged in accordance with the latest revision of Form 4232.
3. Electrical connections are made and properly fused.
4. Compressor crankcase heater(s) has been energized for a minimum of 24 hours.
5. Calibrated refrigerant gages have been connected to the suction discharge and oil pressure ports.
6. Turn on the chilled water pump, check direction of rotation and adjust the water flow through the chiller to the specified flow rate, bleed off all entrapped air.
7. Manually energize the fan starters on the LSBC unit and check the fan rotation. Rotation can be changed on 3 phase motors by interchanging any two wires on the main terminal block.
8. Check all refrigerant valves to be sure they are open.
9. Proceed to Step 2.

STEP 2

1. Check the refrigerant sight glass to be sure it is free of bubbles. If not, charge as specified in the latest revision of Form 4232.
2. Shut the compressor down and check the compressor crankcase sight glass for oil level. It should be between ½ to ¾ of the complete sight glass. If not, charge as specified in the latest revision of Form 4232.
3. Restart the compressor, check the voltage of all legs of the motor. They must be within ±2% of each other. Actual voltage must be within ±10% of the nameplate voltage.
4. Check the gages and note if the pressures are within the prescribed limits.
5. After an hour of operation the expansion valve superheat setting should be checked, it should be between 8° and 10°F at the fully loaded condition.
6. The temperatures of the chilled water and condenser water, both in and out, should be checked to be sure the unit is operating within the desired temperatures.
7. The electrical control settings should be checked and, if necessary, reset to those settings indicated on the wiring schematic. The wiring schematic is located inside the door of the control panel. Record the field adjusted settings on this schematic. Factory test stand settings are also recorded here.

PRESSURE SETTINGS (R-22)**

	Operation	PCRC	PCW
HP Limit (CNT196, CNT217 Air, CNT216 Water)	Cut-Out	360 PSIG*/2482.2 kPa	270 PSIG*/1861.7 kPa
	Cut-In	340 PSIG (MR*)/2344.3 kPa	252 PSIG (MR*)/1737.5 kPa
LP Non-Time Delay Limit & Pumpdown (CNT242, CNT165)	Cut-Out	45 PSIG*/310.28 kPa	55 PSIG*/379.23 kPa
	Cut-In	70 PSIG*/482.65 kPa	70 PSIG*/482.65 kPa
LP Limit Time Delay† (CNT252)	Cut-Out	55 PSIG*/379.23 kPa	
	Cut-In	58 PSIG*/399.91 kPa	
Oil Failure†† (CNT179)	Cut-Out	15 PSID/103.43 kPa	15 PSID/103.43 kPa
	Cut-In	20 PSID (MR) 137.9 kPa	20 PSID (MR) 137.9 kPa

(MR) - Manaul Reset

* Set point of control

** Set at equivalent saturated temperatures for R-12 and R-502

† 60 sec. on cutout

†† 90 sec. on cut-out

LSBC PRESSURE SETTINGS (R-22)

CONTROL				SENSING	SET POINT (PSI) CUT-IN	CUT-OUT	DIFFERENTIAL
Fan Cycling	1 Compressor	1 Fan		Discharge Pressure	220#		95 ± 18
		2 Fans	Fan-1	Discharge Pressure	220#		95 ± 18
			Fan-2	Discharge Pressure	260#		95 ± 18
	2 Compressor	2 Fans	Fan-1	Discharge Pressure	220#		95 ± 18
			Fan-2	Discharge Pressure	260#		95 ± 18
		3 Fans	Fan-1	Discharge Pressure	220#		95 ± 18
			Fan-2	Discharge Pressure	260#		95 ± 18
			Fan-3	Discharge Pressure	270#		95 ± 18
	3 Compressor	3 Fans	Fan-1	Discharge Pressure	220#		95 ± 18
			Fan-2	Discharge Pressure	260#		95 ± 18
			Fan-3	Discharge Pressure	270#		95 ± 18
Modulating Damper				Discharge Pressure	Set point at 140#, throttle Range 'B' (for Penn Controller). The damper will start opening at 140# and will be wide open at 190#.		

'Changes With Thermostat Settings
'Standard Minimum Operating Temperatures

CHECKING CONTROLS

PRESSURESTAT

Pressurestats are connected to both the high side and low side to protect the compressor. Pressurestats are preset at the factory, however, they must be checked in the field, to suit conditions of the application. Typical settings for air-conditioning using refrigerant R-22 are shown in the table above.

TESTING THE OIL PRESSURE SWITCH

1. Hold the pressure switch in the oil safety switch closed. Do this by moving the arm on the left side of the switch forward. The compressor should stop in about one and one half minutes.
2. Should the compressor continue to run for more than 90 seconds, the safety switch wiring should be checked, and if found to be correct, the safety switch should be replaced.

   NOTE: Be sure the differential switch closes when the compressor is shut down. After making this test, it will be necessary to press the "reset" button on the switch in order to reset the thermal switch. (The thermal switch must be allowed to cool about 3 minutes before attempting to reset it.)

Warning: Do not by-pass or manually operate the oil safety switch in order to operate the compressor. If the oil failure switch stops the compressor, it is a signal that something is wrong. To protect the compressor from serious damage, a serviceman should find the trouble before the compressor is restored to normal service. The control is set to cut in at 20 PSI and cut out at 15 PSI oil pressure.

RUNNING CHECK AND ADJUSTMENTS

1. Check the oil pressure. It should read 35-50 lbs. These pressures are above suction pressure.
2. Recheck the oil level in compressor. (See instructions on Lubrication and Factory Oil Charge).
3. Adjust the water regulating valve to maintain desired discharge pressure.
4. Adjust operating thermostat for proper temperature.
5. Check system to be sure full charge of refrigerant is available through liquid line sight glass. (See instructions on charging system).
6. Check and adjust all controls for proper setting. (See instructions on checking controls.)
7. Cap all valves tightly.

LUBRICATION

A properly operated unit should run with the compressor crankcase warm to touch. Check oil level frequently to see that a sufficient amount of oil remains in the crankcase. The oil pressure should be 35 to 50 psi (241.33 to 344.75 kPa) above suction pressure. This should be checked with a calibrated gage. The oil pump is equipped with a pressure relief valve built in, factory set, and requires no adjustment.

FACTORY OIL CHARGE

Units are shipped with the crankcase filled to normal level, halfway up on the "Bulls Eye" sight glass. The initial oil charge on PCW units is usually sufficient. When PCRC units are completed it may be necessary to add oil as some oil must circulate through the system. Run the compressor for 30 to 40 minutes until conditions have leveled off; stop the compressor without pumping down and immediately check the oil level. The oil level must be ½ to ¾ up the sight glass. If the level is low, add oil.

ADDING OIL

a. Pump down the unit and close compressor shut-off valves.

b. Add oil through the oil drain angle valve in the front side of the compressor directly below the oil pump. The oil level must be between ½ and ¾ of the sight glass and the angle valve must be capped when oil fill operation is completed. Use Naphthenic Base 300 SUS oil, in all except low temperature machines. Use Naphthenic Base 150 SUS oil in low temperature machines.

SHUTDOWN FOR PROLONGED PERIOD

a. Pump the unit down by closing the valve and operate the compressor down to 10 psig suction. Turn all power off and close the compressor discharge service valve and all other system hand valves. Tag all valves that have been closed. The unit and piping should be drained completely of all water especially if it is subject to freezing conditions.

b. Restart of the unit requires a warmup of the crankcase for a period of 24 hours if the crankcase heaters have been de-energized during the period of shutdown.

OPERATION

SEQUENCE OF OPERATION

The wiring diagram in the unit control panel shows the wiring for that model. The diagrams shown on pages 14 and 15 are typical only and are not to be used when trouble-shooting or repairing specific units.

PCW

Using the typical schematic diagram found on page 14 we will assume that liquid is flowing through the chiller, the unit has had power applied to it for a minimum of 24 hours, all safeties are made and the operating thermostat is calling for cooling.

When the master control switch(S1) is thrown the compressor will start immediately and the liquid line solenoid will open. The system is now fully operational.

As the liquid being cooled reaches the desired temperature the operating thermostat will sense it and shut down the unit in the following manner:

The unloader solenoid (US2) will open when switch #3 opens, dropping the capacity of the unit to 75%. When switch #2 opens, unloader solenoid (US1) opens also, dropping the capacity of the unit to 50%. As switch #1 opens, the compressor will shut down and the liquid line solenoid will close. There is no pumpdown circuit with this unit.

The cycle is reversed when the thermostat calls for cooling.

PCRC

Using the typical schematic diagram found on page 15, assume that the liquid is flowing through the chiller, power has been applied to the unit for twenty four hours, all safeties are made and the operating thermostat is calling for cooling.

When the master control switch (S1) is thrown a circuit is completed to the control relay 2CR which will result in the following action:

The liquid line solenoid (1LLS) will open, causing liquid refrigerant to flow to the evaporator where it is expanded. An increase of pressure will be sensed in the suction line and the low pressure switch will transfer its position, closing the liquid line solenoid and enabling the anti-cycle relay to begin timing. After the anti-cycle relay has timed out, the compressor will start and in turn the condenser fans will operate, the liquid line solenoid will open and the unloader solenoids will close, allowing the compressor to load completely and its refrigerant system to function.

As the liquid being cooled reaches the desired temperature the operating thermostat will sense it and shut down the unit in the following manner:

When switch #3 opens it will cause the unloader solenoid (US2) to open, dropping the capacity of the unit to 75%. Opening switch #2 will cause the unloader solenoid (US1) to open, dropping the capacity to 50%. The liquid line solenoid will close when switch #1 of the operating thermostat opens and the compressor will pump down and go off.

The cycle is reversed when the thermostat calls for cooling.

CONTROLS AND FUNCTIONS

SAFETY DEVICES

OL **Overload Relays** - designed to open the control circuit if there is an overload in the power circuit to the motors. These are the automatic reset type.

MWP **Robertshaw Motor Protector** - heat sensors embedded in the motor winding open the control circuit to the compressor if there is any undue rise in temperature. It is an automatic reset unit.

HP **High Pressure Switch** - will open the control circuit to the compressor if the discharge pressure rises above its preset limits (manual reset type).

LP **Low Pressure Switch (PCRC)** - has a "built-in" time delay and is an auto-reset type. If the pressure becomes too low in the suction line and is sustained for a period of 60 seconds, the circuit to the compressor will open.

Low pressure switch (PCW) - is an auto reset type. If the pressure becomes too low in the suction line the circuit to the compressor will open.

COF **Compressor Oil Failure Switch** - has a "built-in" time delay and if the pressure differential between the low side and high side of the oil pump fails to attain or sustain a predetermined pressure for a period of 90 seconds the compressor will shut down.

FU **Fuse** - opens the circuit if there is a prolonged overload or short circuit.

CB **Circuit Breaker** - acts as a disconnect switch and opens the circuit if there is an overload or short circuit.

FT **Freeze Thermostat** - senses leaving water temperature of a PCW unit. Prevents freeze-up of the unit.

OPERATING DEVICES

CCH **Crankcase Heater(s)** - are energized whenever the compressor is not operating. They must operate for a period of 24 hours prior to initial or seasonal start-up. The crankcase heaters must be energized for a minimum of 2 hours after repair of the unit. More time should be allowed depending upon the ambient temperature at the compressor and duration of shutdown.

OT **Operating Thermostat** - senses inlet chilled water temperature and consists of four single pole double throw switches. Each switch is designed to operate at a different temperature with a differential between each switch preset to insure proper sequential operation.

US **Unloader Solenoids** - when energized, they allow the compressor to load; when de-energized the compressor will unload.

LLS **Liquid Line Solenoid** - when energized it allows liquid refrigerant to flow to the evaporator.

ATH **Ambient Temperature Thermostat** - preset at factory for ambient temperature above the minimum operating temperature for the particular model size. See Page 7 of Form 6050.

M **Motor Starters** - when activated they provide a path for power to the compressor and fan motors.

TRS **Safety Cycle Timer** - is a solid state anti-recycle relay designed to prevent the compressor from short cycling.

S **On/Off Switch** - manually energizes compressor circuit.

HP **Pressure Switch** - senses discharge pressure and cycles the condenser fans.

'PCW' PACKAGED CHILLERS

TYPICAL WATER COOLED SCHEMATIC

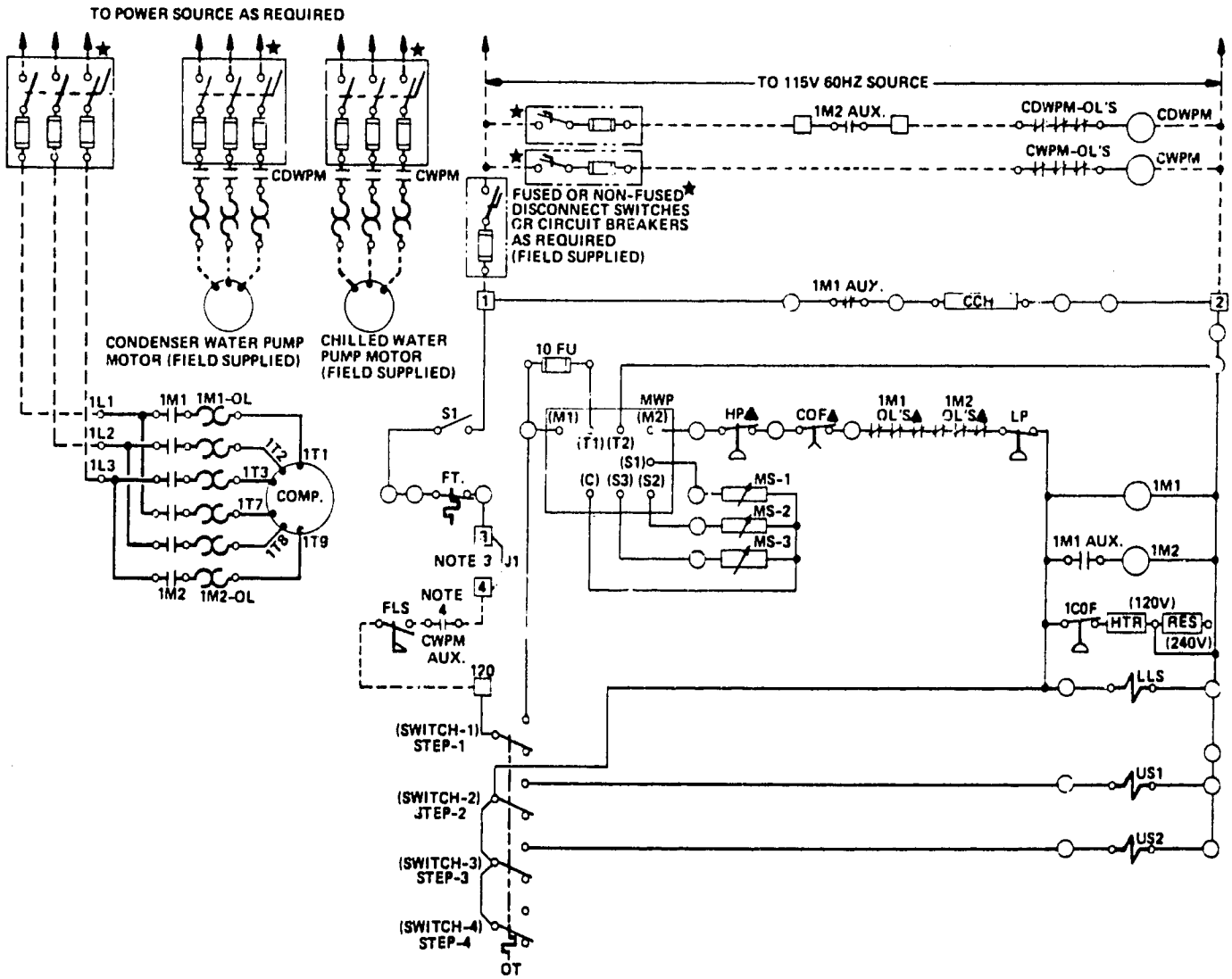

NOTES:

1. ALL FUSES TO BE DUAL ELEMENT TYPE.
2. ALL FIELD WIRING MUST COMPLY WITH LOCAL, STATE AND NATIONAL ELECTRIC CODES.
3. REMOTE SHUTDOWN DEVICE SUCH AS BUILDING CONTROL PANEL, TIME CLOCK, MANUAL ON-OFF SWITCH, AMBIENT THERMOSTAT OR SIMILAR DEVICE.
4. AUXILIARY CONTACT FROM FIELD FURNISHED CHILLED WATER PUMP STARTER.

LEGEND

CDWPM	CONDENSER WATER PUMP STARTER (FIELD SUPPLIED)
CWPM	CHILLED WATER PUMP STARTER (FIELD SUPPLIED)
S	CONTROL SWITCH
CCH	CRANKCASE HEATER
J	JUMPER
FU	FUSE
HTR	HEATER
RES	RESISTOR
M	MOTOR STARTER
OL	STARTER OVERLOAD
AUX	AUXILIARY CONTACT ON STARTER
MWP	MOTOR WINDING PROTECTION
MS	MOTOR WINDING SENSOR
TR	TIME DELAY RELAY
US	UNLOAD SOLENOID
FLS	FLOW SWITCH (FIELD SUPPLIED)
OT	OPERATING THERMOSTAT
LLS	LIQUID LINE SOLENOID
FT	FREEZE THERMOSTAT
HP	HIGH PRESSURE SWITCH
LP	LOW PRESSURE SWITCH
COF	COMPRESSOR OIL FAILURE SWITCH
———	FACTORY WIRING
·····	FIELD WIRING
▲	MANUAL RESET
[ ]	FIELD WIRING TERMINAL
○	FACTORY WIRING TERMINAL

'PCRC' PACKAGED CHILLERS

TYPICAL AIR COOLED SCHEMATIC

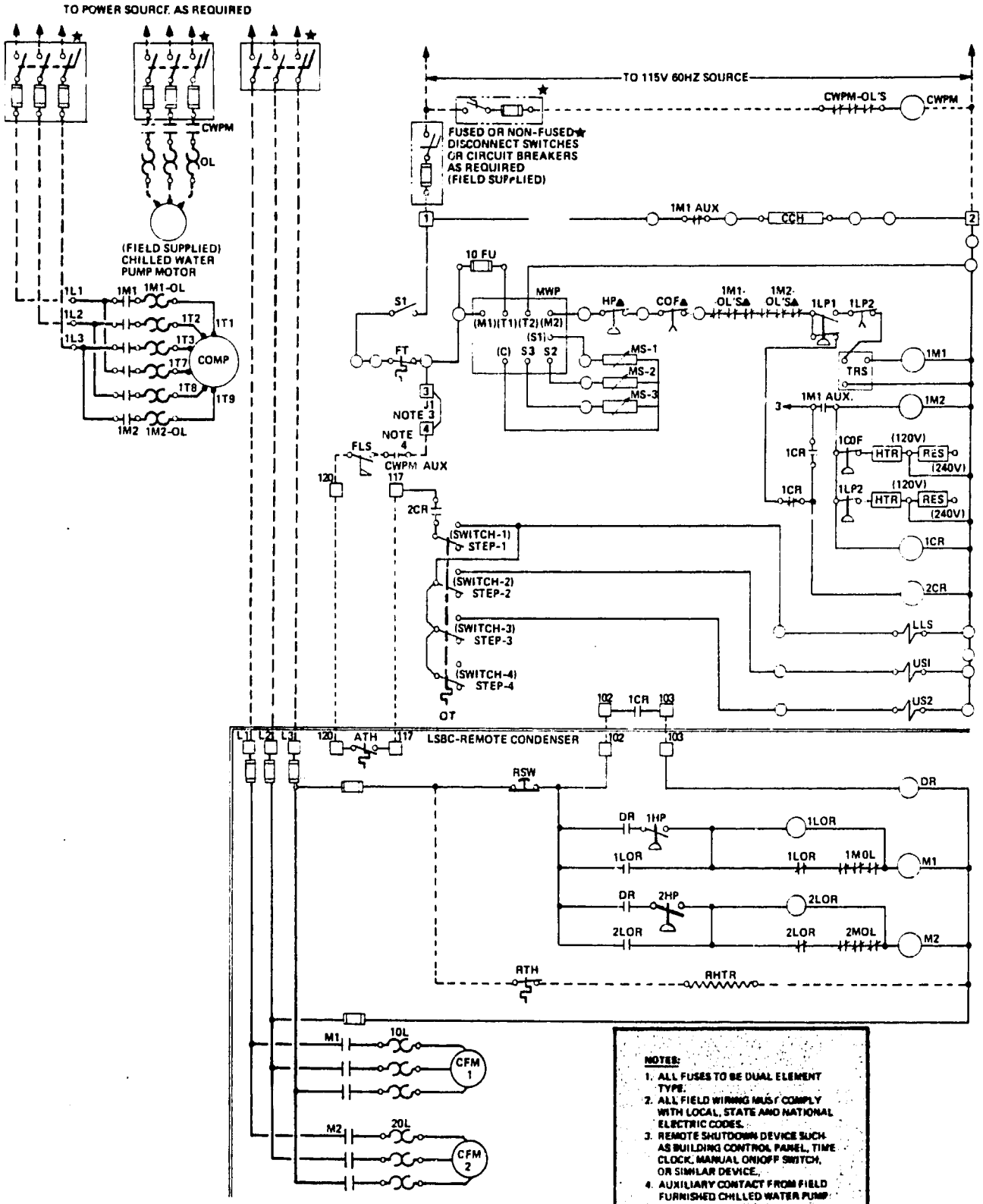

NOTES:

1. ALL FUSES TO BE DUAL ELEMENT TYPE.
2. ALL FIELD WIRING MUST COMPLY WITH LOCAL, STATE AND NATIONAL ELECTRIC CODES.
3. REMOTE SHUTDOWN DEVICE SUCH AS BUILDING CONTROL PANEL, TIME CLOCK, MANUAL ON/OFF SWITCH, OR SIMILAR DEVICE.
4. AUXILIARY CONTACT FROM FIELD FURNISHED CHILLED WATER PUMP STARTER.

LEGEND

CHILLER

CWPM	CHILLED WATER PUMP STARTER (FIELD SUPPLIED)	MS	MOTOR WINDING SENSOR	▲	MANUAL RESET.
CR	CONTROL RELAY	TR	TIME DELAY RELAY	○	FACTORY WIRING TERMINAL
CCH	CRANKCASE HEATER	TRS	SAFETY CYCLE TIMER	□	FIELD WIRING TERMINAL
J	JUMPER	US	UNLOAD SOLENOID		**AIR COOLED CONDENSER**
FU	FUSE	FLS	FLOW SWITCH (FIELD SUPPLIED)	ATH	AMBIENT THERMOSTAT
HTR	HEATER	OT	OPERATING THERMOSTAT	LOR	LOCK-OUT RELAY
RES	RESISTOR	LLS	LIQUID LINE SOLENOID	DR	DEMAND RELAY
S	CONTROL SWITCH	FT	FREEZE THERMOSTAT	CFM	CONDENSER FAN MOTOR
M	MOTOR STARTER	HP	HIGH PRESSURE SWITCH	RSW	RESET SWITCH
OL	STARTER OVERLOAD	LP	LOW PRESSURE SWITCH	RTH	RECEIVER THERMOSTAT
AUX	AUXILIARY CONTACT ON STARTER	COF	COMPRESSOR OIL FAILURE SWITCH	RHTR	RECEIVER HEATER
MWP	MOTOR WINDING PROTECTION	———	FACTORY WIRING		
		- - - -	FIELD WIRING		

MAINTENANCE

GENERAL

Like all mechanical equipment, this packaged chiller should be checked periodically. Use only the services of a qualified refrigeration service mechanic for inspection and maintenance checks or service operation. If a breakdown should occur check the service chart on the succeeding pages for possible causes and remedies.

Make certain that all controls are set correctly to protect the equipment against improper operation.

COMPRESSORS

Compressors require little maintenance other than being sure that it has proper and sufficient lubrication. If a need does occur where disassembly of the compressor is required instructional information can be found in the latest revision of Form 4155.

CLEANING CHILLERS

Cleaning the water sides of shell and tube units with chemicals is a common method of maintaining top efficiency of this type of heat transfer equipment. The presence of scale is common in virtually all types of water circulating equipment. This scale, in most cases, is composed of magnesium and calcium carbonates, sulphates, and other impurities. These scales are readily removed with chemicals. For specific information about cleaning chillers refer to the latest revision of Form 8110

CLEANING WATER COOLED CONDENSERS

To assure optimum efficiency of the condenser, the water tubes should be cleaned periodically. Frequency is dependent upon water conditions. Analysis and treatment of the water should be considered to cope with the problems of scale, corrosion and slime. For further information consult the latest revision of Form 8144.

CLEANING AIR COOLED CONDENSERS

The face of the condenser should be cleaned at least once a month during operation. If conditions are bad and condensers pick up dirt very quickly, it is suggested that they be cleaned more frequently. If condenser is allowed to get too dirty, the machine will run a high head pressure and will not give satisfactory performance. To clean, follow the directions specified under Annual Inspection (LSBC) Paragraph 3.

ANNUAL INSPECTION (LSBC)

Disconnect the main power supply and proceed with the inspection as follows:

1. Electrical Contactors and Starters - If contacts appear burned or worn, replace the appropriate component.
2. Electrical Box - Tighten any loose fasteners.
3. Controls - Check all pressure and temperature control capillary tubes and lines for excessive vibration or rubbing on metal parts. Secure line to stop excessive vibration and isolate or move capillary tube from metal edges. Check damper linkage adjustment (for units supplied with damper control for low ambient).
4. Condenser Drive

   A. LSBC Belt Drive Units

      1. Check the security of all fans and pulleys.
      2. Check the security of motor and bearing hold-down bolts.
      3. Make sure that the rain shields over bearings are in position.
      4. Check the belts for wear and proper tension and alignment. The proper tension on a belt will show as a straight belt on both sides with the unit not running. When running, the belt should show a slight bow in the slack side. To set tension by belt deflection, new belts should deflect 7/16" with 8 lbs. force at mid-span. After 48 hours of operation, the force required for the 7/16" deflection should drop to 5-1/2 lbs. The operating tension should never be below this force. Replace worn belts now to avoid costly call back and down time later.

   B. LSBC Optional Direct Drive Units

      1. Check the security of all fans and motor mounts.
      2. Make sure rain shields are in position.
      3. Make sure fan grilles are secure.
      4. Remove any heavy deposits of dirt which could effect the fan balance.

5. Condenser Coils

Dirty coils can be cleaned using a soft brush or by flushing with cool water or commercially available coil cleaners. DO NOT USE HOT WATER OR STEAM. To do so will cause excessive pressure in the system. The face of the condenser should be cleaned at the beginning of the season and periodically thereafter if conditions require it.

6. Bearing Lubrication

For long life and trouble free operation, a good maintenance schedule should be followed.

A. LSBC Belt Drive Units

1. The motor should be lubricated in accordance with the motor manufacturer's recommendation, or approximately every five years.
2. The fan shaft bearings should be lubricated in accordance with the manufacturer's recommendation, or every one to two years, depending on the unit's operating time.
3. Whenever it becomes necessary to remove or replace the 54" or 60" fan, the following precautions must be followed for proper reinstallation.

   54" Fan: The fan after reinstallation must project above the orifice plate approximately 1/3 of the blade width.

   60" Fan: The fan after reinstallation should be located 2 to 2-1/2" below the top of the venturi.

BURNOUTS AND SYSTEM CLEANING

The burnout of a hermetic compressor motor in the majority of cases is a direct result of impurities in the refrigerant system. These impurities may be in the form of dirt, scale or moisture left in the system at the time of installation. In addition there could be fluorine and chlorine gases, oxygen and acids due to the breakdown of the refrigerant, oil or insulating materials, or any combination of these. The presence of any contaminating substance can start a reaction resulting in the formation of the others. The ultimate result is premature failure of the compressor motor. For specific instructions consult the latest revision of Form 4232.

SERVICE CHART

SYMPTOM	POSSIBLE CAUSE	REMEDY
1. Unit will not start	1. Power off	1. Check main disconnect switch.
	2. Main line open	2. Check main fuses.
	3. Incorrect wiring	3. Check with wiring diagrams.
	4. Loose terminals	4. Tighten terminals.
	5. Control circuit open	5. Check pump fuses, starter heater elements, pressure and temperature controls.
2. Compressor hums but does not start	1. Low voltage	1. Check at main entrance and at unit. Consult power company if voltage is low and increase wire size to the unit if voltage is normal at main and low at unit. Voltage must be within 10% of motor name plate rating.
	2. No power on one phase of 3 phase unit.	2. Check fuses and wiring.
	3. Faulty starter or contactor	3. Check the contacts and time delay on part wind start.
3. Compressor cycles on low pressure control	1. Refrigerant shortage	1. Check for leaks and add refrigerant.
	2. No load on chiller	2. Check pump operation and water flow.
	3. Restriction in liquid line	3. (a) Plugged drier. If temperature drop exists across the drier remove and replace cores. (b) Liquid line or suction valve partially closed. Open valves fully and close in one full turn. (c) Expansion valve clogged or inoperative. Check superheat setting. Check charge and thermo bulb.
	4. Head pressure too low	4. Restrict water flow to condenser by adjusting the water regulating valve or cycle cooling tower fan.
4. Compressor cycles on high pressure control	1. Compressor discharge valve partially closed.	1. Open valve fully and close with one turn
	2. Air in system	2. Flush water valve. If pressure in system exceeds the pressure corresponding to the water temperature purge air from compressor gauge connection.
	3. Overcharge of refrigerant	3. Purge system while in operation until bubbles show in sight glass. Close valve and add small amount of refrigerant until sight glass just clears.
	4. High pressure control improperly set	4. Adjust the control.
	5. Dirty condenser	5. Clean the condenser.
	PCW ONLY	**PCW ONLY**
	6. Main water valve closed	6. Open the water valve.
	7. Water regulating valve set high or defective	7. Reset or replace valve.
	8. Water temperature too high or insufficient water	8. Check water supply against requirements. If cooling tower is used, check the spray nozzles.
	PCRC ONLY	**PCRC ONLY**
	9. Condenser fan inoperative	9. Check, replace or repair - belt, set screw (pulley), fan motor, or inoperative fan control.

SPECIFICATION AND PHYSICAL DATA

PCW AND PCRC PACKAGED CHILLERS					
MODEL	**025**	**030**	**040**	**050**	**060**
COMPRESSORS					
MODEL (No.)	(1) 316HF	(1) 357HP	(1) 509HF	(1) 316HF (1) 316HFN	(1) 357HF (1) 357HFN
RPM	1750	1750	1750	1750	1750
Oil Charge Qts/l (1)	9/8.514	9/8.514	9/8.514	18/17.028	18/17.028
Refrigerant	R-22	R-22	R-22	R-22	R-22
CHILLERS					
MODEL (Std. @ 45° LW) (2)	CH 648B	CH 660C	CH 760B	DCH 860B	DCH 1060B
Design Pressure PSIG/kPa – Water Side	20/1379	200/1379	200/1379	200/1379	200/1379
Design Pressure PSIG/kPa – Refrigerant Side	300/2068.5	300/2068.5	300/2068.5	300/2068.5	300/2068.5
Water Volume (Gal./l)	2.7/10.219	3.4/12.869	5.0/18.925	6.3/23.846	9.4/35.579
Water Connection In & Out MPT	2"	2"	3"	3"	4"
Vent & Drain Connections FPT	1/2"	1/2"	1/2"	1/2"	1/2"
CONDENSERS					
PCW PACKAGED CHILLERS					
MODEL (3)	CSTC 1060	CSTC 1248	CSTC 1260	CSTC 1060	CSTC 1248
Number	1	1	1	2	2
Design Pressure PSIG/kPa – Water Side	125/861.9	125/861.9	125/861.9	125/861.9	125/861.9
Design Pressure PSIG/kPa – Refrigerant Side	400/2758	400/2758	400/2758	400/2758	400/2758
Relief Valve Connection – SAE Flare	5/8"	5/8"	5/8"	5/8"	5/8"
MATCHED LSBC CONDENSER FOR PCRC PACKAGED CHILLERS					
MODEL (Belt Drive) (4)	LSBC 025B	LSBC 030B	LSBC 040B	LSBC 050B	LSBC 060B
Fans (No.) Diameter	(1) 54"	(1) 54"	(2) 54"	(2) 54"	(3) 54"
Motors (No.) HP	(1) 3	(1) 3	(2) 3	(2) 3	(3) 3
Model (Direct Drive – Opt. 1) (4)	LSBC 025D	LSBC 030D	LSBC 040D	LSBC 050D	N/A
Fans (No.) Diameter	(4) 26"	(4) 26"	(6) 26"	(8) 26"	–
Motors (No.) HP	(4) 3/4"	(4) 3/4	(6) 3/4	(8) 3/4	–
Receivers (No.) D x L (Opt. 3) (5)	(1) 12 x 60	(1) 12 x 60	(1) 12 x 72	(2) 10 x 60	(2) 12 x 60
Receiver Pumpdown Cap., Lbs. Ea. (6)	225	225	260	160	225
WEIGHTS					
PCW Shipping, Lbs./kg.	1900/861.84	2000/907.20	2100/952.56	3300/1496.88	3700/1678.32
PCW Operating, Lbs./kg.	1875/850.50	2000/907.20	2150/975.24	3330/1510.49	3780/1714.61
Refrigerant Charge PCW, Lbs./kg	60/27.22	70/31.75	80/36.29	120/54.43	135/61.24
PCE Shipping, Lbs./kg.	1450/657.72	1500/680.40	1550/703.08	2400/1088.64	2600/1179.36
PCE Operating, Lbs./kg.	1425/646.38	1475/669.06	1500/680.40	2350/1065.96	2570/1165.75
LSBC Shipping, Lbs./kg.	1140/517.11	1325/601.02	2180/988.85	2690/1220.18	2995/1358.53
LSBC Operating Weight(Std.), Lbs./kg. (7)	1155/523.91	1345/610.09	2205/1000.13	2725/1236.06	3035/1376.68
LSBC Operating Weight(Opt. 3), Lbs/kg. (7)	1365/619.16	1550/703.08	2465/1118.12	3010/1365.34	3445/1562.65
PCRC Refrigerant Charge, Lbs./kg. (8)	80/36.29	100/45.36	110/49.90	170/77.11	210/95.26
PCRC Refrig. Charge(Opt. 3), Lbs/kg. (8)	220/99.79	230/104.33	275/124.8	320/145.15	460/208.66

NOTES:

1. Oil Charge – Nominal oil charge per compressor is 9 quarts. On PCRC units, additional oil will be required at startup to balance the system. The amount required will depend on distance between the PCE unit and the LSBC condenser.
2. Alternate chiller models may be required for other operating conditions. See page 8 of form 6050 for alternate models and conditions.
3. Alternate water cooled condensers may be required for unusual water conditions. Consult factory for selection.
4. Standard matched air cooled LSBC condenser is the belt drive model. See page 3 of form 6050 for minimum operating ambients and the various head pressure control options available. The direct drive LSBC is required for head pressure control Option 1.

   Note: A larger than standard condenser may be necessary under certain conditions. Consult the factory for selection and pricing.

   A receiver and sub-cooling coil are standard on all air cooled condensers, except for the low ambient flooded system (head pressure control Option 3) where a larger receiver is supplied in place of the standard receiver (See Note 5).
5. Receivers noted are supplied for flooded low ambient operation (head pressure control Option 3, see page 3 of form 6050) and are supplied with brackets and supports for mounting on the LSBC condenser. Receivers are ASME stamped (400 PSIG Design working pressure) supplied with a cooled relief valve, and include a heater.
6. Pump down capacities based on receivers 80% full @ 90°F condensing.

   Standard operating weight includes LSBC with electrical box, standard receiver and sub-cooling coil and normal charge of R-22. Option 3 LSBC operating weight also includes the full size receiver and flooded refrigerant charge.
8. Refrigerant charge for PCRC systems to be supplied by the installing contractor. Weight shown is estimated, based on 50' of piping between the PCE unit and the LSBC condenser. Standard charge also includes head pressure control Option 1 and 2. Option 3 is for flooded low ambient operation.

SPECIFICATION AND PHYSICAL DATA

PCW AND PCRC PACKAGED CHILLERS					
MODEL	075	090	100	120	150
COMPRESSORS					
MODEL (No.)	(1) 408HFN (1) 509HF	(1) 357HF (2) 357HFN	(1) 408HF (2) 408HFN	(1) 509HF (2) 509HFN	(4) 509HFN
	1 Ea.	3	3	3	4
RPM	1750	1750	1750	1750	1750
Oil Charge Qts/l (1)	18/17.028	27/25.542	27/25.542	27/25.542	36/34.056
Refrigerant	R-22	R-22	R-22	R-22	R-22
CHILLERS					
MODEL (Std. @ 45° LW) (2)	DCH 1160B	VCH 1160B	VCH 1260B	VCH 1260B	(2) CH 1060B
Design Pressure PSIG/kPa - Water Side	200/1379	200/1379	200/1379	200/1379	200/1379
Design Pressure PSIG/kPa - Refrigerant Side	300/2068.5	300/2068.5	300/2068.5	300/2068.5	300/2068.5
Water Volume (Gal./l)	11.1/42.014	11.1/42.014	13.3/50.341	13.3/50.341	18.8/71.58
Water Connection In & Out MPT	4"	4"	4"	4"	(2) 4"
Vent & Drain Connections FPT	1/2"	1/2"	1/2"	1/2"	1/2"
CONDENSERS					
PCW PACKAGED CHILLERS					
MODEL (3)	CSTC 1260	CSTC 1260 CSTC 1460	CSTC 1260 CSTC 1660	CSTC 1260 CSTC 1660	CSTC 1660
Number	2	1 Ea.	1 Ea.	1 Ea.	2
Design Pressure PSIG/kPa - Water Side	125/861.9	125/861.9	125/861.9	125/861.9	125/861.9
Design Pressure PSIG/kPa - Refrigerant Side	400/2758	400/2758	300/2068.5	300/2068.5	300/2068.5
Relief Valve Connection — SAE Flare	5/8"	5/8"	5/8"	5/8"	5/8"
MATCHED LSBC CONDENSER FOR PCRC PACKAGED CHILLERS					
MODEL (Belt Drive) (4)	LSBC 075B	LSBC 090B	LSBC 100B	LSBC 120B	(2) LSBC 075
Fans (No.) Diameter	(3) 60"	(3) 60"	(3) 60"	(3) 60"	(3) 60" Ea.
Motors (No.) HP	(3) 3	(3) 5	(3) 3	(3) 5	(3) 3 Ea.
Model (Direct Drive — Opt. 1) (4)	N/A	N/A	N/A	N/A	N/A
Fans (No.) Diameter	—	—	—	—	—
Motors (No.) HP	—	—	—	—	—
Receivers (No.) D x L (Opt. 3) (5)	(2) 12 x 60	(1) 10 x 60 (1) 12 x 72	(1) 12 x 60 (1) 14 x 78	(1) 12 x 60 (1) 14 x 78	(1) 12 x 60
Receiver Pumpdown Cap., Lbs. Ea. (6)	225	160 260	225 400	225 400	225
WEIGHTS					
PCW Shipping, Lbs./kg.	3950/1791.72	6550/2971/08	6850/3107.16	7050/3197.88	9700/4399.92
PCW Operating, Lbs./kg.	4110/1864.30	6700/3039.12	6975/3163.86	7200/3265.92	9900/4490.64
Refrigerant Charge PCW, Lbs./kg	160/72.58	210/95.26	235/106.60	250/113.40	310/140.62
PCE Shipping, Lbs./kg.	2800/1270.08	5500/2494.80	5600/2540.16	5800/2630.88	8200/3719.52
PCE Operating, Lbs./kg.	2780/1261.01	5450/2472.12	5550/2517.48	5750/2608.20	8100/3674.16
LSBC Shipping, Lbs./kg.	3810/1728.22	4035/1830.28	4525/2052.54	4560/2068.42	7620/3456.43
LSBC Operating Weight(Std.), Lbs./kg. (7)	3860/1750.90	4085/1852.96	4595/2084.29	4630/2100.17	7720/3501.79
LSBC Operating Weight(Opt. 3), Lbs/kg. (7)	4260/1932.34	4455/2020.79	5150/2336.04	5185/2351.92	8520/3864.67
PCRC Refrigerant Charge, Lbs./kg. (8)	230/104.33	285/129.28	300/136.08	315/142.88	570/258.55
PCRC Refrig. Charge(Opt. 3), Lbs/kg. (8)	460/208.66	455/206.39	635/288.04	635/288.04	950/430.92

NOTES:

1. Oil Charge — Nominal oil charge per compressor is 9 quarts. On PCRC units, additional oil will be required at startup to balance the system. The amount required will depend on distance between the PCE unit and the LSBC condenser.
2. Alternate chiller models may be required for other operating conditions. See page 8 of Form 6050 for alternate models and conditions.
3. Alternate water cooled condensers may be required for unusual water conditions. Consult factory for selection.
4. Standard matched air cooled LSBC condenser is the belt drive model. See page 3 of Form 6050 for minimum operating ambients and the various head pressure control options available. The direct drive LSBC is required for head pressure control Option 1.

   Note: A larger than standard condenser may be necessary under certain conditions. Consult the factory for selection and pricing. A receiver and sub-cooling coil are standard on all air cooled condensers, except for the low ambient flooded system (head pressure control Option 3) where a larger receiver is supplied in place of the standard receiver (See Note 5).
5. Receivers noted are supplied for flooded low ambient operation (head pressure control Option 3, see page 3 of Form 6050) and are supplied with brackets and supports for mounting on the LSBC condenser. Receivers are ASME stamped (400 PSIG Design working pressure) supplied with a coded relief valve, and include a heater.
6. Pump down capacities based on receivers 80% full @ 90°F condensing.
7. Standard operating weight includes LSBC with electrical box, standard receiver and sub-cooling coil and normal charge of R-22. Option 3 LSBC operating weight also includes the full size receiver and flooded refrigerant charge.
8. Refrigerant charge for PCRC systems to be supplied by the installing contractor. Weight shown is estimated, based on 50' of piping between the PCE unit and the LSBC condenser. Standard charge also includes head pressure control Option 1 and 2. Option 3 is for flooded low ambient operation.

CHILLER PRESSURE DROP CURVES

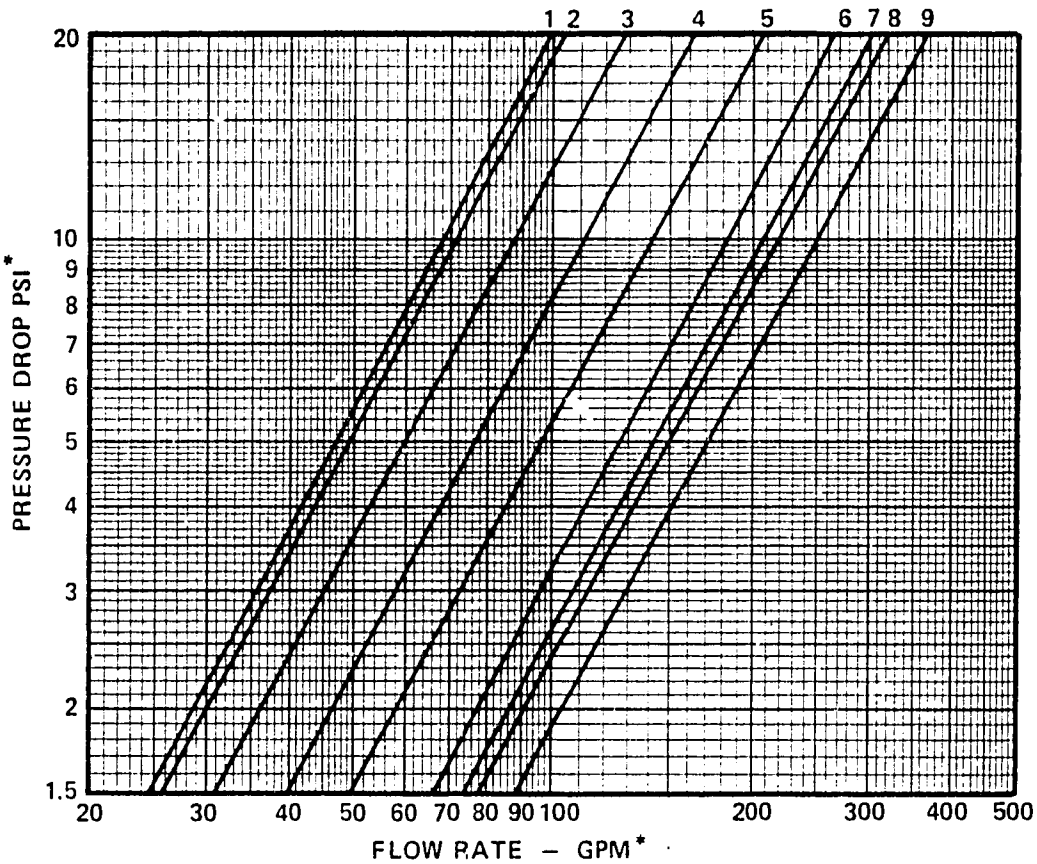

*To determine metric equivalents use:

PSI x 6.89 = kPa

GPM x .0631 = l/s

MODEL PCW OR PCRC	LEAVING CHILLED WATER TEMP. °F	°C	CHILLER MODEL		PRESSURE DROP CURVE NO.
025	45° - 50°	7.22° - 10.0°	Std.	CH648B	2
	43° - 44°	6.11° - 6.67°	Opt. 2	CH660C	3
	42°	5.56°	Opt. 1	CH760A	1
030	44° - 50°	6.67° - 10.0°	Std.	CH660C	3
	42° - 43°	5.56° - 6.11°	Opt. 1	CH760B	4
040	42° - 50°	5.56° - 10.0°	Std.	CH760B	4
050	45° - 50°	7.22° - 10.0°	Std.	DCH860B	6
	43° - 44°	6.11° - 6.67°	Opt. 2	DCH1060B	7
	42°	5.56°	Opt. 1	DCH1160A	5
060	44° - 50°	6.67° - 10.0°	Std.	DCH1060B	7
	42° - 43°	5.56° - 6.11°	Opt. 1	DCH1160B	8
075	42° - 50°	5.56° - 10.0°	Std.	DCH1160B	8
090	45° - 50°	7.22° - 10.0°	Std.	VCH1160B	8
	42° - 44°	5.56° - 6.67°	Opt. 1	VCH1260B	9
100	42° - 50°	5.56° - 10.0°	Std.	VCH1260B	9
120	44° - 50°	6.67° - 10.0°	Std.	VCH1260B	9
	42° - 43°	5.56° - 6.11°	Opt. 1	VCH1360B	9
150	44° - 50°	6.67° - 10.0°	Std.	(2) CH1060B	7
	42° - 43°	5.56° - 6.11°	Opt. 1	(2) CH1160B	8

NOTE: Chiller GPM Is not to exceed maximum or minimum limits shown on curves.

CSTC WATER COOLED CONDENSER PRESSURE DROP CURVES

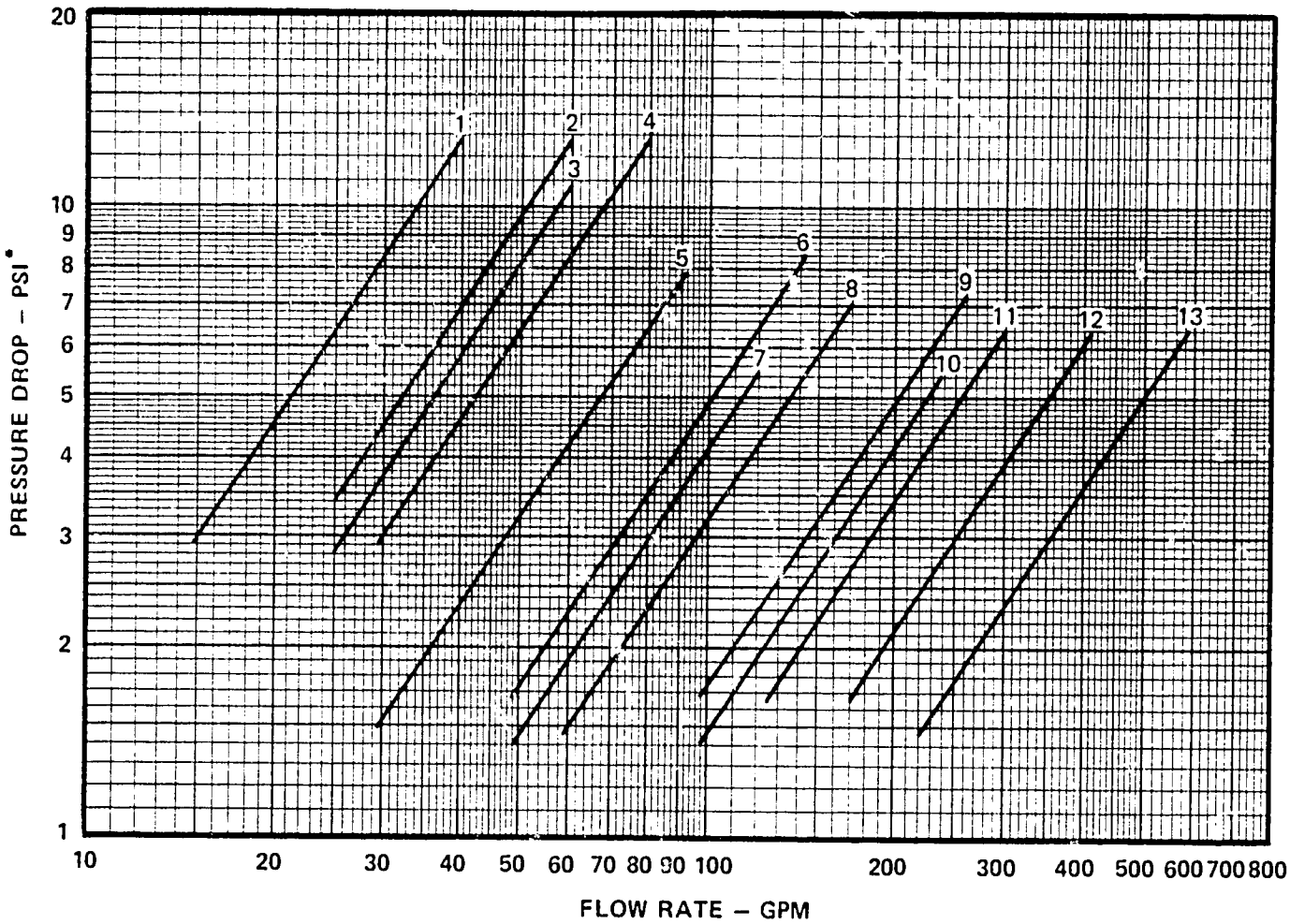

*To determine metric equivalents use:

PSI x 6.89 = kPa

GPM x .0631 = l/s

MODEL PCW	CITY WATER CURVE NO.	TOWER WATER CURVE
025	1	5
030	3	7
040	2	6
050	4	8
060	-	10
075	-	9
090	-	11
100	-	12
120	-	12
150	-	13

NOTES:

1. Condenser GPM is not to exceed maximum or minimum limits shown on curves
2. Pressure drops for models PCW 050 thru 150 are for the TOTAL unit flow through both condensers piped in parallel.
3. For city water selection refer to equipment selection procedure, page 5, example 1, unit selection, catalog 6050.

ELECTRICAL DATA – PCW

MODEL	COMPRESSOR	ELECTRICAL CHARACTERISTICS Volts/3 Phase/60 Hz.	COMPRESSOR NAMEPLATE AMPS, Each[1]		INDIVIDUAL COMPRESSOR CONNECTIONS[2]				SINGLE POWER CONNECTIONS FOR UNIT[3]			
			Rated Load Amps	Locked Rotor Amps	Minimum Circuit Ampacity	Maximum Branch Circuit Fuse (Amps)	MAX. INRUSH AMPS[4] XL	MAX. INRUSH AMPS[4] PW	Minimum Circuit Ampacity	Maximum Branch Circuit Fuse (Amps)	MAX. INRUSH AMPS[5] XL	MAX. INRUSH AMPS[5] PW
PCW025	(1) 316 HF	200	104	506	130	200	506	326				
		230	90	440	113	150	440	283				
		460	45	220	56	80	220	142				
		575	36	176	45	70	176	NA				
PCW030	(1) 357 HF	200	114	550	143	200	550	354				
		230	99	478	124	175	478	307				
		460	50	239	63	90	239	155				
		575	40	191	50	70	191	NA				
PCW040	(1) 509 HF	200	150	717	188	300	717	460				
		230	131	623	164	225	623	402				
		460	66	312	83	125	312	201				
		575	52	249	65	100	249	NA				
PCW050	(2) 316 HF	200	104	506	130	200	506	326	234	300	610	430
		230	90	440	113	150	440	283	203	250	530	373
		460	45	220	56	80	220	142	101	125	265	187
		575	36	176	45	70	176	NA	81	100	212	NA
PCW060	(2) 357 HF	200	114	550	143	200	550	354	257	350	664	468
		230	99	478	124	175	478	307	223	300	577	406
		460	50	239	63	90	239	155	113	150	289	205
		575	40	191	50	70	191	NA	90	110	231	NA
PCW075	(1) 408 HF	200	137	660	171	225	660	418	325	400	810	568
		230	119	574	149	225	574	370	283	350	705	501
		460	60	287	75	110	287	185	143	175	353	257
		575	48	230	60	90	230	NA	113	150	282	NA
	(1) 509 HF	200	150	717	188	300	717	460				
		230	131	623	164	225	623	402				
		460	66	312	83	125	312	201				
		575	52	249	65	100	249	NA				
PCW090	(3) 357 HF	200	114	550	143	200	550	354	371	450	778	582
		230	99	478	124	175	478	307	322	400	676	505
		460	50	239	63	90	239	155	163	200	339	255
		575	40	191	50	70	191	NA	130	150	271	NA
PCW100	(3) 408 HF	200	137	660	171	225	660	418	445	600	934	692
		230	119	574	149	225	574	370	387	450	812	608
		460	60	287	75	110	287	185	195	225	407	305
		575	48	230	60	90	230	NA	156	175	326	NA
PCW120	(3) 509 HF	200	150	717	188	300	717	460	488	600	1,017	760
		230	131	623	164	225	623	402	426	500	885	664
		460	66	312	83	125	312	201	215	250	444	333
		575	52	249	65	100	249	NA	169	200	353	NA
PCW150	(4) 509 HF	200	150	717	188	300	717	460	638	800	1,167	910
		230	131	623	164	225	623	402	557	700	1,016	795
		460	66	312	83	125	312	201	281	350	510	399
		575	52	249	65	100	249	NA	221	250	405	NA

NOTES:

1 Compressor nameplate rating is for a single compressor.
2 STANDARD: A separate power source is required for each compressor on multiple compressor package chillers.
3 OPTIONAL: On multiple compressor packages, a single power connection kit is available. A circuit breaker is provided for each compressor.
4 Inrush current is based on single compressor with a separate power source. XL = Across-the-line Starter. PW = Part Wind Starter.
5 If the optional single power connection kit is supplied on multiple compressor packages, then maximum inrush current equals inrush amps for one compressor plus RLA for the other compressor(s). Note compressors start sequentially.
6 Control voltage is 115V, 1 phase, 60 hertz. A separate source of power is required. A 115V control transformer can be supplied as an option.
7 All external wiring is to conform to NEC or local or state codes, as applicable.

ELECTRICAL DATA – PCE

MODEL	COMPRESSOR	ELECTRICAL CHARACTERISTICS Volts/3 Phase/60 Hz.	COMPRESSOR NAMEPLATE AMPS, Each[1]		INDIVIDUAL COMPRESSOR CONNECTIONS[2]				SINGLE POWER CONNECTIONS FOR UNIT[3]			
			Rated Load Amps	Locked Rotor Amps	Minimum Circuit Ampacity	Maximum Branch Circuit Fuse (Amps)	MAX. INRUSH AMPS[4] XL	MAX. INRUSH AMPS[4] PW	Minimum Circuit Ampacity	Maximum Branch Circuit Fuse (Amps)	MAX. INRUSH AMPS[5] XL	MAX. INRUSH AMPS[5] PW
PCE 025	(1) 316 HF	200	113	506	141	200	506	326				
		230	98	440	123	175	440	283				
		460	49	220	61	90	220	142				
		575	39	176	49	70	176	NA				
PCE 030	(1) 357 HF	200	127	550	159	225	550	354				
		230	111	478	139	200	478	307				
		460	56	239	70	90	239	155				
		575	44	191	55	80	191	NA				
PCE 040	(1) 509 HF	200	172	717	215	300	717	460				
		230	150	623	188	225	623	402				
		460	75	312	94	125	312	201				
		575	60	249	75	110	249	NA				
PCE 050	(2) 316 HF	200	113	506	141	200	506	326	254	350	619	439
		230	98	440	123	175	440	283	221	300	538	381
		460	49	220	61	90	220	142	110	150	269	191
		575	39	176	49	70	176	NA	88	110	215	NA
PCE 060	(2) 357 HF	200	127	550	159	225	550	354	286	350	677	481
		230	111	478	139	200	478	307	250	350	589	418
		460	56	239	70	90	239	155	126	175	295	211
		575	44	191	55	80	191	NA	99	125	235	NA
PCE 075	(1) 408 HF	200	153	660	191	300	660	418	368	500	832	590
		230	133	574	166	225	574	370	321	400	724	520
		460	67	287	84	125	287	185	161	200	362	260
		575	53	230	66	100	230	NA	128	175	290	NA
	(1) 509 HF	200	172	717	215	300	717	460				
		230	150	623	188	225	623	402				
		460	75	312	94	125	312	201				
		575	60	249	75	110	249	NA				
PCE 090	(3) 357 HF	200	127	550	159	225	550	354	413	500	804	608
		230	111	478	139	200	478	307	361	450	700	529
		460	56	239	70	90	239	155	182	225	351	267
		575	44	191	55	80	191	NA	143	175	279	NA
PCE 100	(3) 408 HF	200	153	660	191	300	660	418	497	600	966	724
		230	133	574	166	225	574	370	432	500	840	636
		460	67	287	84	125	287	185	218	250	421	319
		575	53	230	66	100	230	NA	172	200	336	NA
PCE 120	(3) 509 HF	200	172	717	215	300	717	460	559	700	1,061	804
		230	150	623	188	225	623	402	488	600	923	702
		460	75	312	94	125	312	201	244	300	462	357
		575	60	249	75	110	249	NA	195	225	369	NA
PCE 150	(4) 509 HF	200	172	717	215	300	717	460	731	1,000	1,233	976
		230	150	623	188	225	623	402	638	800	1,073	852
		460	75	312	94	125	312	201	319	400	537	426
		575	60	249	75	110	249	NA	255	300	429	NA

NOTES:
1 Compressor nameplate rating is for a single compressor.
2 STANDARD: A separate power source is required for each compressor on multiple compressor package chillers.
3 OPTIONAL: On multiple compressor packages, a single power connection kit is available. A circuit breaker is provided for each compressor
4 Inrush current is based on single compressor with a separate power source. XL = Across-the-line starter. PW = Part Wind Starter.
5 If the optional single power connection kit is supplied on multiple compressor packages, then maximum inrush current equals inrush amps for one compressor plus RLA for the other compressor (s). Note compressors start sequentially.
6 Control voltage is 115V, 1 phase, 60 hertz. A separate source of power is required. A 115V control transformer can be supplied as an option.
7 All external wiring is to conform to NEC or local or state codes, as applicable.

ELECTRICAL DATA – LSBC

Model No. LSBC (1&2)	Voltage (3)	FANS AND CONTROLS											
		Condenser Motor(s)				Controls		Separate Power Connection					
								Belt Drive Fan(s)				Direct Drive Fan(s)	
		Belt Standard		Direct (4) Optional		Std.	Low	Standard Ambient		Low Ambient			
		Motor HP	Total FLA	HP	Total FLA	FLA	FLA	Ampacity (5)	Fuse CB(6)	Ampacity (5)	Fuse CB(6)	Ampacity (5)	Fuse CB(6)
025	200	(1) 3	11.1	(4) ¾	11.1	2.5	5.0	16.4	25	18.9	25	15.8	20
	230	(1) 3	9.6	(4) ¾	10.9	2.2	4.3	14.2	20	16.3	20	15.2	20
	460	(1) 3	4.8	(4) ¾	5.6	1.1	2.2	7.1	15	8.2	15	7.1	15
	575	(1) 3	3.4	N/A	N/A	.87	1.7	5.8	15	6.6	15	N/A	N/A
030	200	(1) 3	11.1	(4) ¾	11.1	3.8	7.5	17.7	25	21.4	25	17.1	25
	230	(1) 3	9.6	(4) ¾	10.9	3.3	6.5	15.3	20	18.5	20	16.3	25
	460	(1) 3	4.8	(4) ¾	5.6	1.6	3.3	7.6	15	9.3	15	7.6	15
	575	(1) 3	3.4	N/A	N/A	1.3	2.6	6.2	15	7.5	15	N/A	N/A
040	200	(2) 3	22.2	(6) ¾	14.6	3.8	7.5	28.8	35	32.5	40	20.2	25
	230	(2) 3	19.2	(6) ¾	14.2	3.3	6.5	24.9	30	28.1	35	19.3	25
	460	(2) 3	9.6	(6) ¾	8.4	1.6	3.3	12.4	15	14.1	20	16.4	15
	575	(2) 3	7.8	N/A	N/A	1.3	2.6	10.1	15	11.4	15	N/A	N/A
050	200	(2) 3	22.2	(8) ¾	21.8	5.0	10.0	30.0	35	35.0	40	25.4	30
	230	(2) 3	19.2	(8) ¾	21.3	4.3	8.7	25.9	30	30.3	35	23.5	30
	460	(2) 3	9.6	(8) ¾	11.2	2.2	4.4	13.0	15	15.2	20	13.8	15
	575	(3) 3	1.8	N/A	N/A	1.7	3.5	10.5	15	12.3	15	N/A	N/A
060	200	(3) 3	33.3	N/A	N/A	5.0	10.0	41.0	50	46.1	60	N/A	N/A
	230	(3) 3	28.8	N/A	N/A	4.3	8.7	35.5	40	39.9	50	N/A	N/A
	460	(3) 3	14.4	N/A	N/A	2.2	4.4	17.8	20	20.0	25	N/A	N/A
	575	(3) 3	11.7	N/A	N/A	1.7	3.5	14.4	20	16.2	20	N/A	N/A
075	200	(3) 3	33.3	N/A	N/A	7.5	15.0	43.6	50	51.1	60	N/A	N/A
	230	(3) 3	28.8	N/A	N/A	6.5	13.0	37.7	45	44.2	50	N/A	N/A
	460	(3) 3	14.4	N/A	N/A	3.3	6.5	18.9	25	22.1	25	N/A	N/A
	575	(3) 3	11.7	N/A	N/A	2.6	5.2	15.3	20	17.9	20	N/A	N/A
090	200	(3) 5	52.5	N/A	N/A	7.5	15.0	64.4	80	71.9	80	N/A	N/A
	230	(3) 5	45.6	N/A	N/A	6.5	13.0	55.9	70	62.4	70	N/A	N/A
	460	(3) 5	22.8	N/A	N/A	3.3	6.5	28.0	35	31.2	35	N/A	N/A
	575	(3) 5	18.3	N/A	N/A	2.6	5.2	22.4	30	25.0	30	N/A	N/A
100	200	(3) 3	33.3	N/A	N/A	7.5	15.0	43.6	50	51.1	60	N/A	N/A
	230	(3) 3	28.8	N/A	N/A	6.5	13.0	37.7	45	44.2	50	N/A	N/A
	460	(3) 3	14.4	N/A	N/A	3.3	6.5	18.9	25	22.1	25	N/A	N/A
	575	(3) 3	11.7	N/A	N/A	2.6	5.2	15.3	20	17.9	20	N/A	N/A
120	200	(3) 5	52.5	N/A	N/A	7.5	15.0	64.4	80	71.9	80	N/A	N/A
	230	(3) 5	45.6	N/A	N/A	6.5	13.0	55.9	70	62.4	70	N/A	N/A
	460	(3) 5	22.8	N/A	N/A	3.3	6.5	28.0	35	31.2	35	N/A	N/A
	575	(3) 5	18.3	N/A	N/A	2.6	5.2	22.4	30	25.0	30	N/A	N/A

NOTES:

1. Standard condenser: belt drive LSBC-B model.
   Optional condenser: direct drive LSBC-D model.
2. An electrical control box is supplied on LSBC units used with PCE packaged chillers. The box contains all controls, starters (for three phase motors only) fuses and wiring. Terminal blocks for a single power three phase connection is provided. The control voltage is 230V. A control transformer is provided for all 460V and 575 units.
3. All units are 3 phase and 60 hertz. Maximum voltage variation must not be more than ± 10%.
4. LSBC condensers with direct drive motors (200/230-1-60) are to be supplied with three phase power (200-3-60 or 230-3-60).
5. Ampacity is the minimum circuit ampacity as required by the National Electric Code and is to be used for wire sizing unless local codes take precedence. Ampacity = 1.25 FLA of the largest motor plus the FLA of all other motors and controls.
6. All fuses are based on a dual element type suitable for motor starting current.

DIMENSIONAL DATA

MODELS PCW 025, 030 & 040†

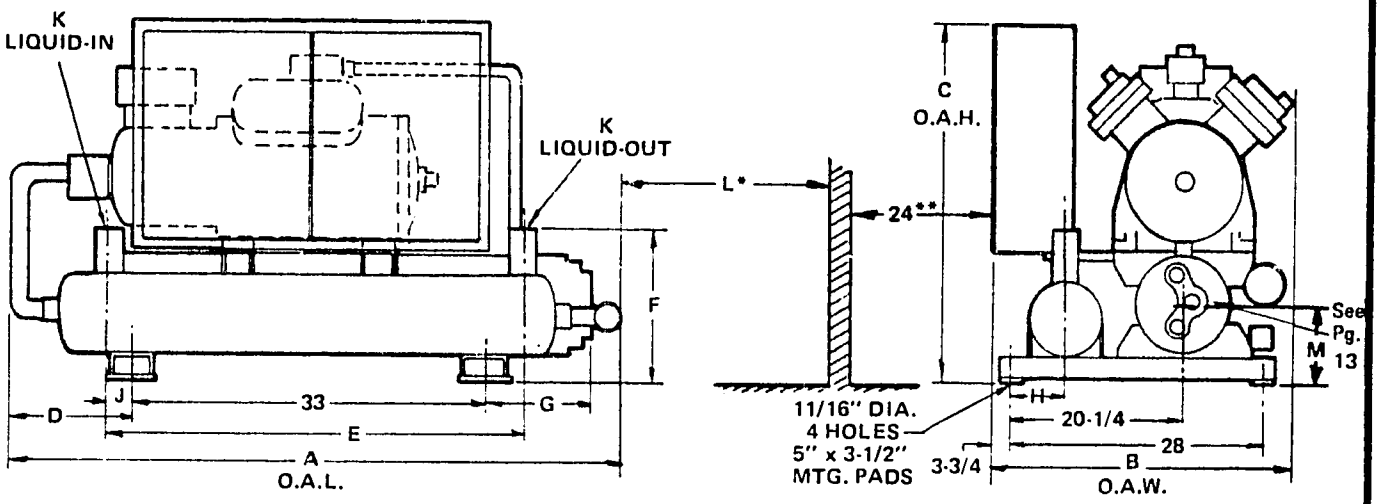

MODEL NO.	DIMENSIONS												CONDENSER
	A	B	C	D	E	F	G	H	J	K	L*	M	
PCW 025	71-3/8	37-1/2	40-1/2	17	45-1/8	14-1/4	18-3/8	6-1/2	6	2" MPT	60	9-7/8	CSTC 1060
PCW 030	80-5/8	37-1/2	42-1/2	24	57-1/8	14-1/4	12-5/8	6-1/2	12	2" MPT	48	10-7/8	CSTC 1248
PCW 040	82	37-1/2	42-1/2	24-5/8	56-1/8	17-1/2	18-5/8	7-1/2	11-1/2	3" MPT	60	10-7/8	CSTC 1260

MODELS PCW 050, 060 & 075†

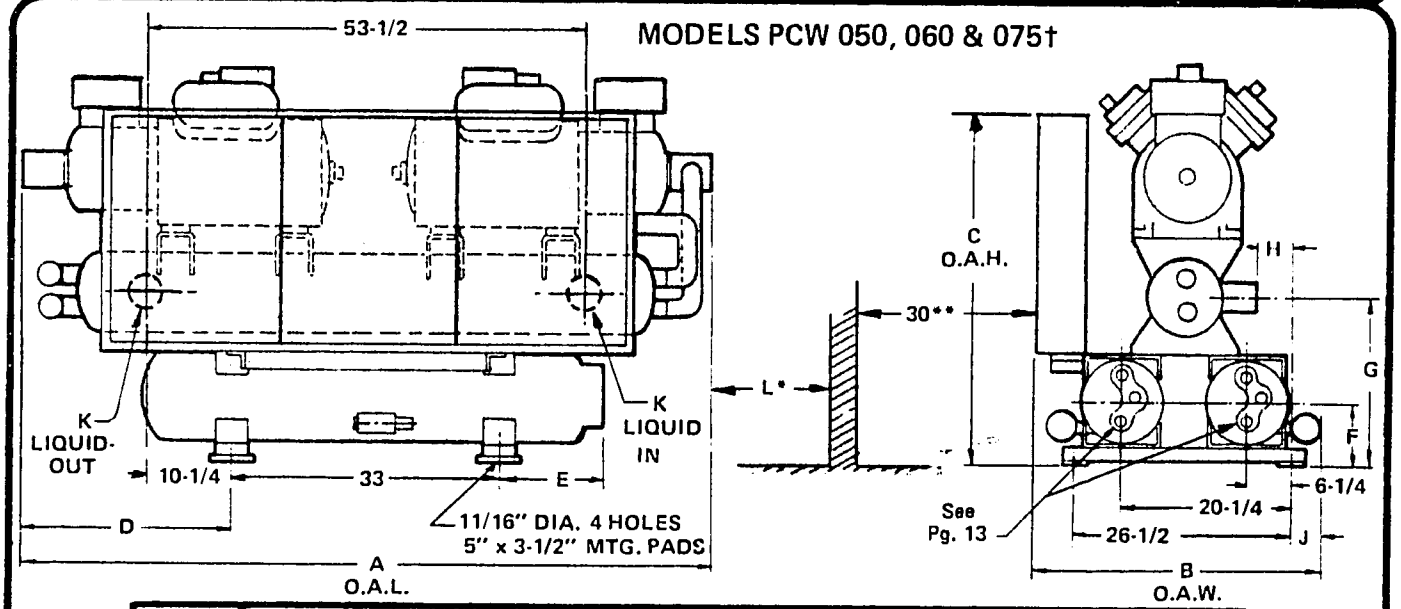

MODEL NO.	DIMENSIONS											CONDENSER
	A	B	C	D	E	F	G	H	J	K	L*	
PCW 050	89	38-1/2	47	28	18-7/16	8-5/8	20-3/16	2-3/4	4-3/8	3" MPT	60	(2) CSTC 1060
PCW 060	89	39-1/2	50	28	12-5/8	9-5/8	22-3/4	1-3/4	5-3/8	4" MPT	48	(2) CSTC 1248
PCW 075	92-1/2	39-3/4	51-1/4	31-1/2	18-5/8	9-5/8	23-5/16	1-1/8	5-5/8	4" MPT	60	(2) CSTC 1260

NOTE: Dimensions are for roughing in purposes only. Consult factory for certified drawings.
Suggested minimum clearance is 18" (all around) unless otherwise specified.
Where alternate chillers are used, consult factory for dimensional data.
Minimum required clearance for mechanical cleaning of condenser tubes (either end).
Suggested minimum clearance.

DIMENSIONAL DATA

MODELS PCW 090,100 & 120†

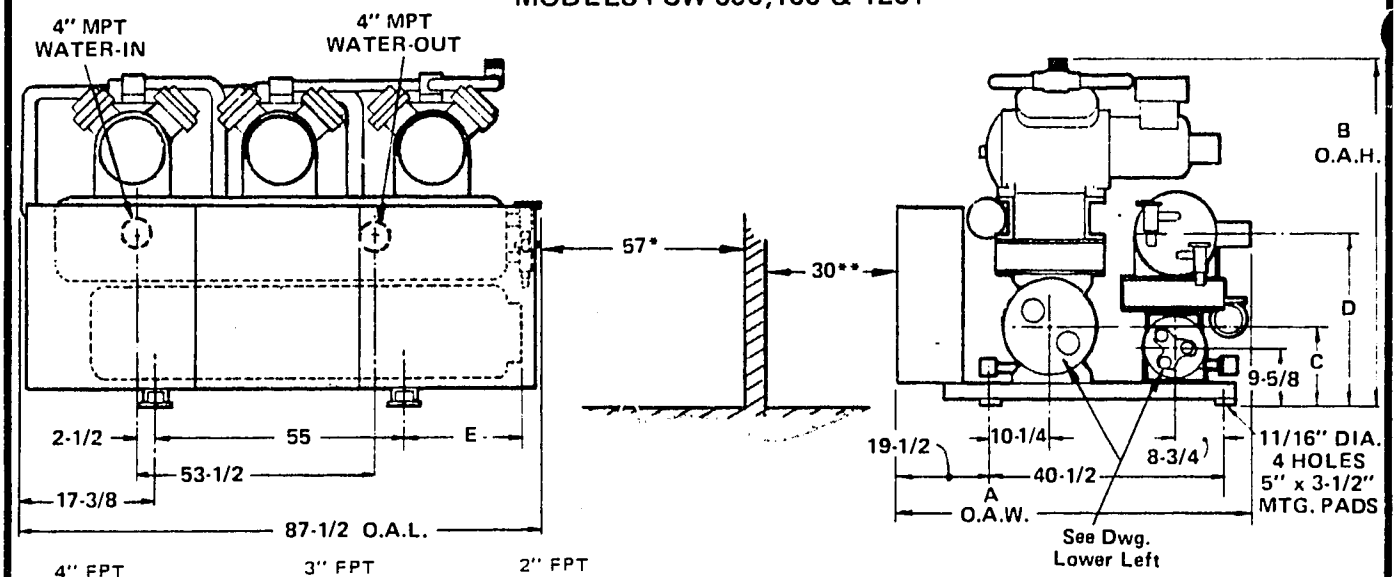

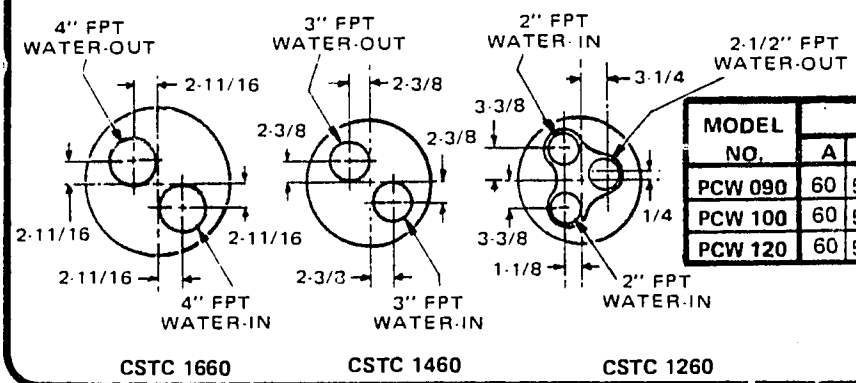

MODEL NO.	DIMENSIONS					CONDENSERS
	A	B	C	D	E	
PCW 090	60	55-3/8	11-1/2	26-1/8	7-7/8	CSTC 1460 & 1260
PCW 100	60	57-3/8	12-1/2	26-5/8	8-7/8	CSTC 1660 & 1260
PCW 120	60	57-3/8	12-1/2	26-5/8	10-3/8	CSTC 1660 & 1260

MODEL PCW 150†

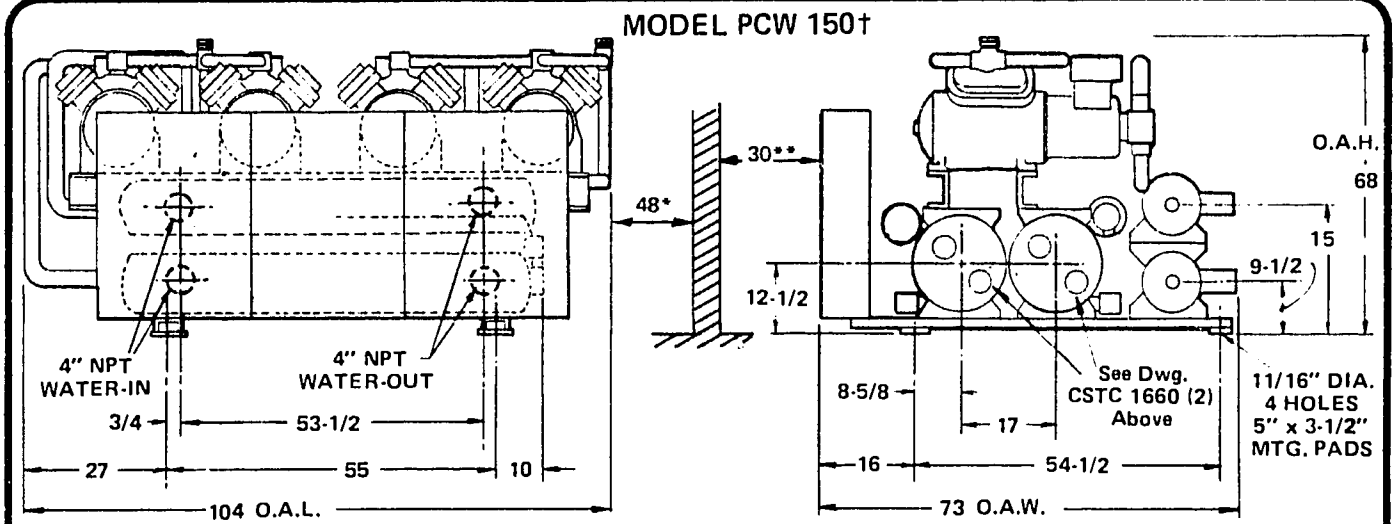

NOTE: Dimensions are for roughing in purposes only. Consult factory for certified drawings. Suggested minimum clearance is 18" (all around) unless otherwise specified.

† Where alternate chillers are used, consult factory for dimensional data.

* Minimum required clearance for mechanical cleaning of condenser tubes (either end).

** Suggested minimum clearance.

PCW 025 THRU PCW 075 CONDENSER CONNECTION DIMENSIONS

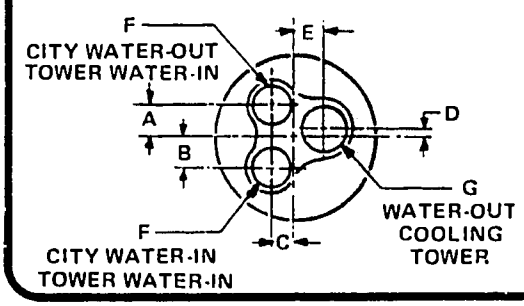

MODEL	DIMENSIONS							CSTC MODEL
	A	B	C	D	E	F	G	
PCW 025	3-1/16	2-5/16	–	3/8	1-11/16	1-1/4	2	1060
PCW 030	3-3/8	3-3/8	1-1/8	1/4	3-1/4	1-1/2	2	1248
PCW 040	3-3/8	3-3/8	1-1/8	1/4	3-1/4	2	2-1/2	1260
PCW 050	3-1/16	2-5/16	–	3/8	1-11/16	1-1/4	2	(2) 1060
PCW 060	3-3/8	3-3/8	1-1/8	1/4	3-1/4	1-1/2	2	(2) 1248
PCW 075	3-3/8	3-3/8	1-1/8	1/4	3-1/4	2	2-1/2	(2) 1260

DIMENSIONAL DATA

MODELS PCE 025, 030 & 040†

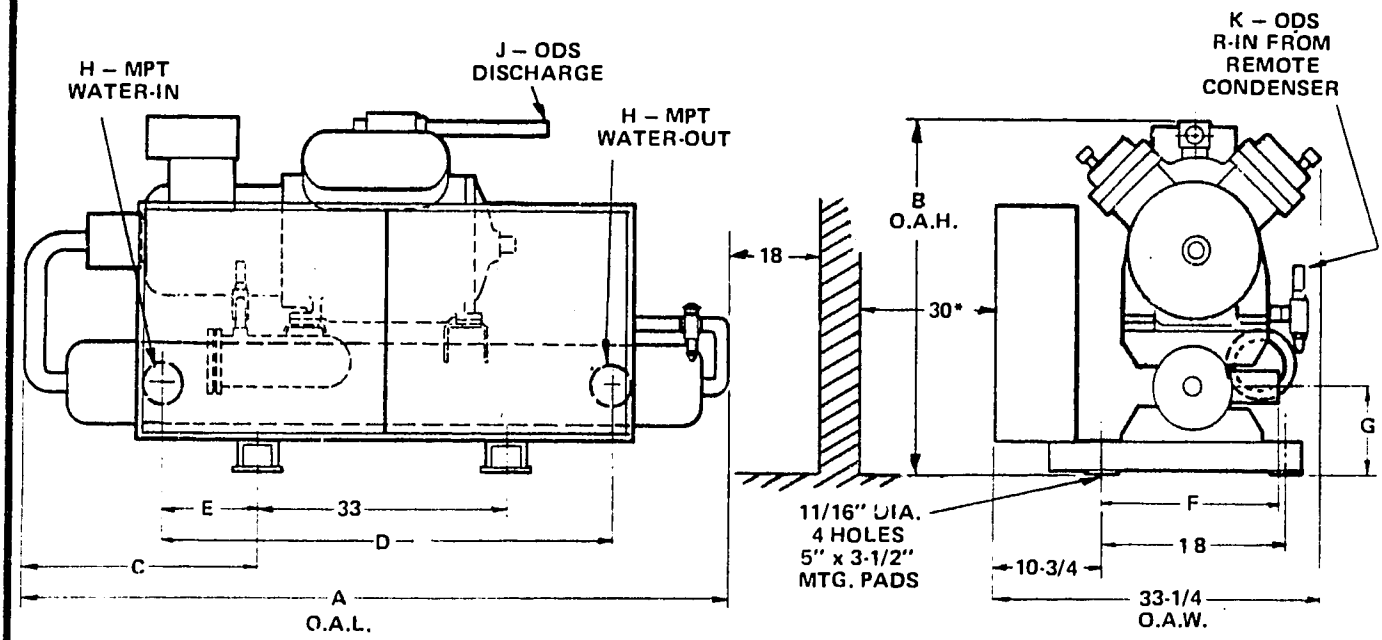

MODEL NO.	DIMENSIONS									
	A	B	C	D	E	F	G	H	J	K
PCE 025	64-3/4	34-5/8	16-1/4	45-1/8	6-1/16	16-1/2	7-3/4	2	1-3/8	7/8
PCE 030	77-5/8	34-5/9	23	57-1/8	12-1/16	16-1/2	7-3/4	2	1-3/8	1-1/8
PCE 040	78-7/8	35-7/8	23-5/8	56-1/8	11-9/16	18-7/8	8-3/8	3	1-5/8	1-1/8

MODELS PCE 050, 060 & 075†

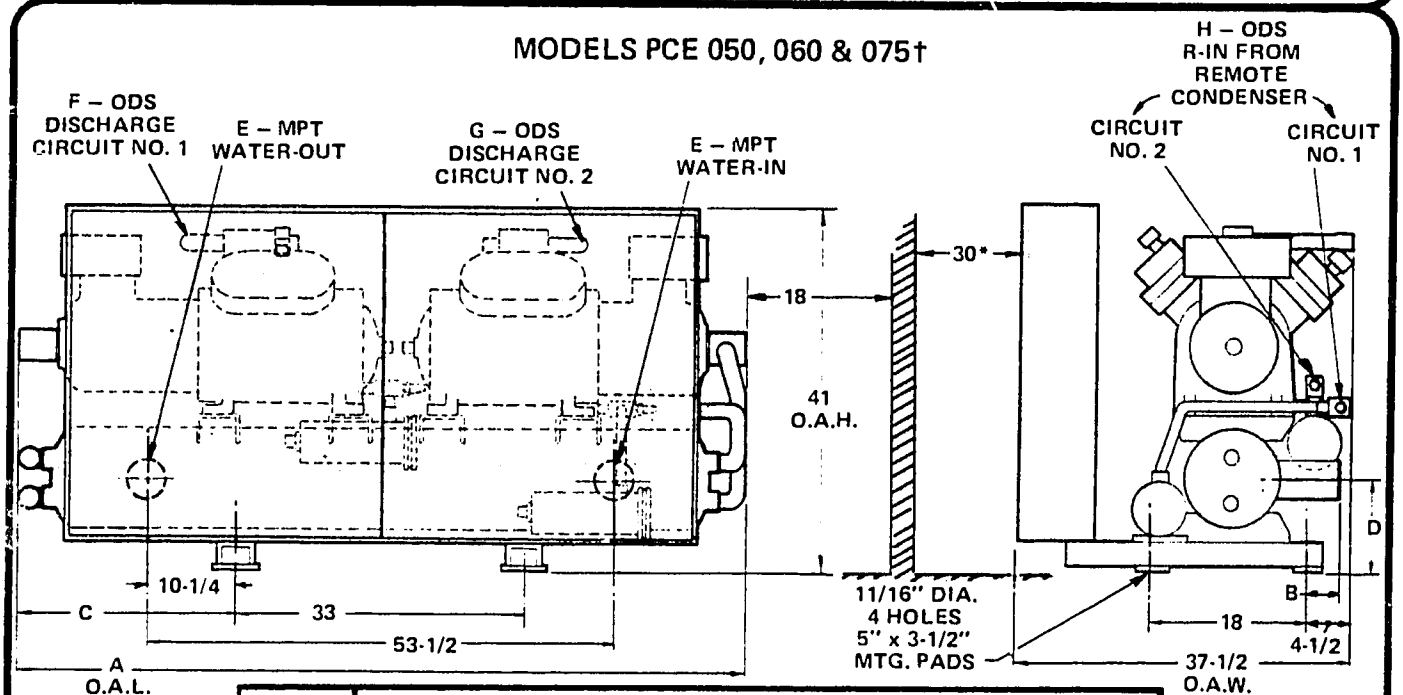

MODEL NO.	DIMENSIONS							
	A	B	C	D	E	F	G	H
PCE 050	84-1/4	1-1/2	24-3/4	8-7/8	3" MPT	1-3/8" ODS	1-3/8" ODS	7/8" ODS
PCE 060	84-1/4	2-1/2	25-5/8	9-1/2	4" MPT	1-5/8" ODS	1-5/8" ODS	1-1/8" ODS
PCE 075	84-1/4	3-1/8	25	10-1/8	4" MPT	1-5/8" ODS	1-5/8" ODS	1-1/8" ODS

NOTE: Dimensions are for roughing in purposes only. Consult factory for certified drawings.
Suggested minimum clearance is 18" (all around) unless otherwise specified.
Where alternate chillers are used, consult factory for dimensional data.
Suggested minimum clearance.

DIMENSIONAL DATA

MODELS PCE 090, 100 & 120†

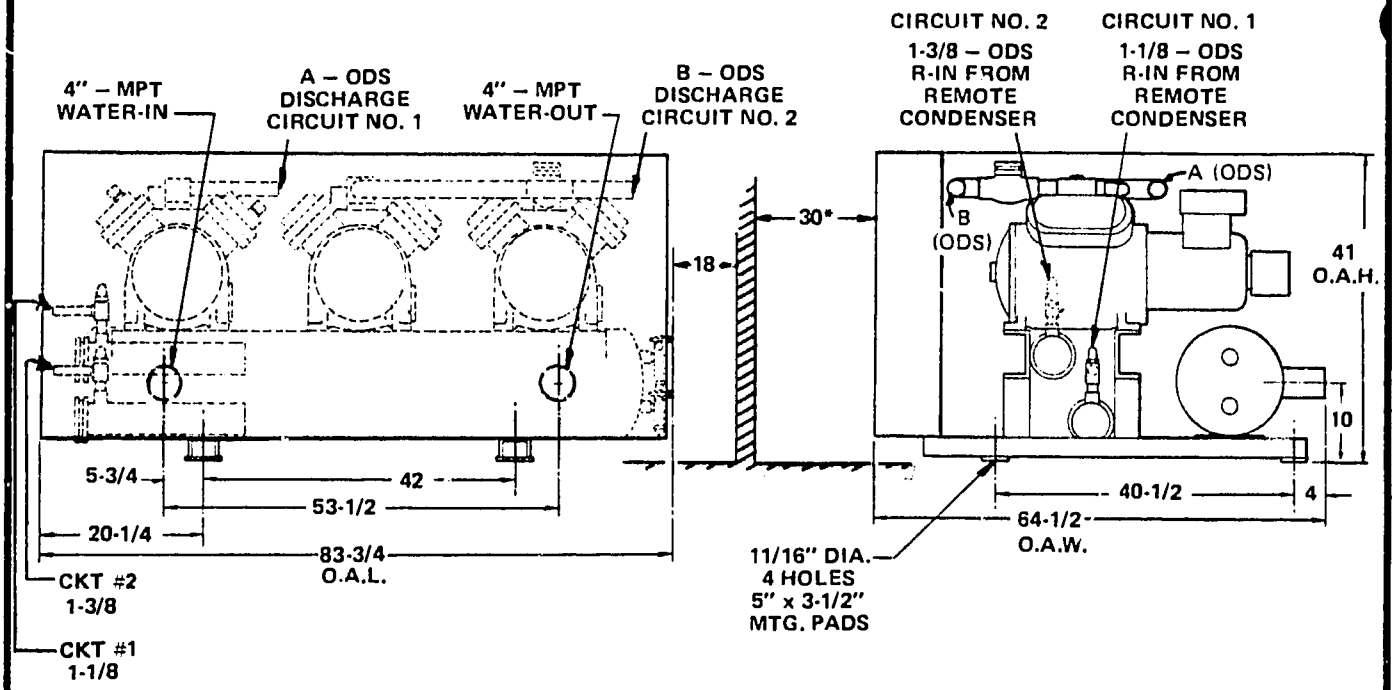

MODEL NO.	DIMENSIONS	
	A	B
PCE 090	1-5/8	2-1/8
PCE 100	1-5/8	2-1/8
PCE 120	1-5/8	2-1/8

MODEL PCE 150†

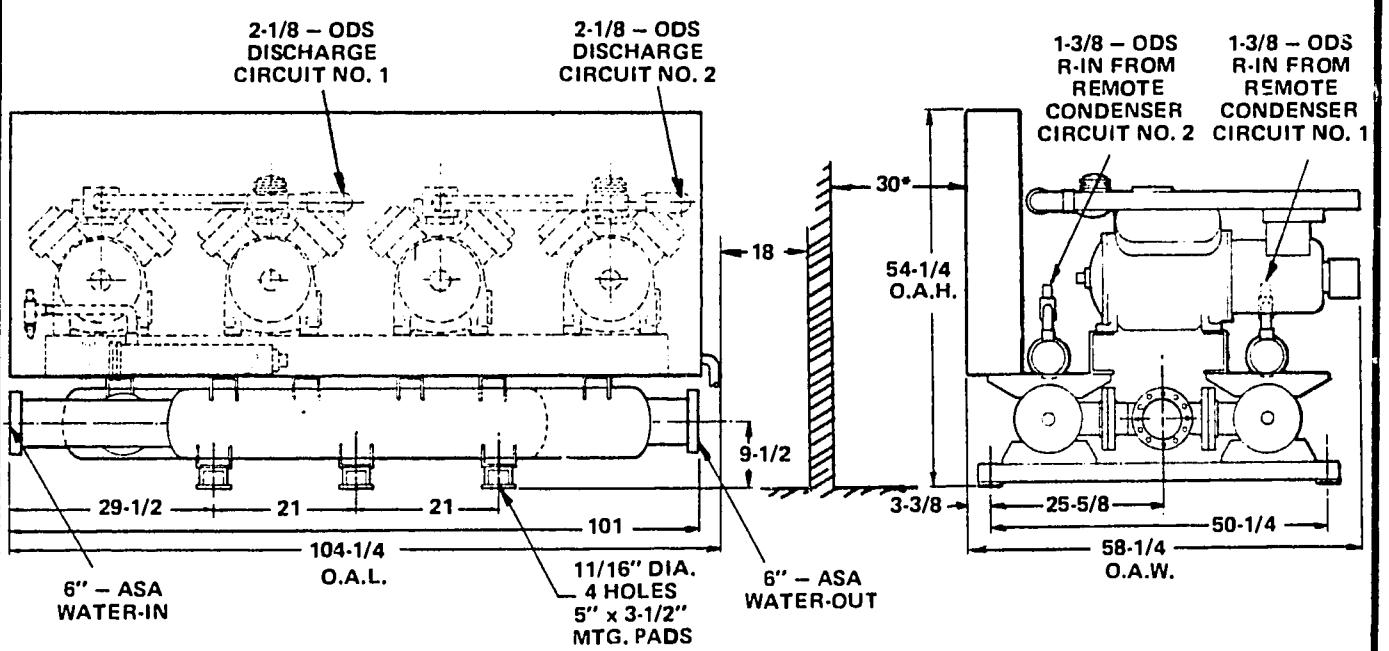

NOTE: Dimensions are for roughing in purposes only. Consult factory for certified drawings.
Suggested minimum clearance is 18" (all around) unless otherwise specified.
Where alternate chillers are used, consult factory for dimensional data.
Suggested minimum clearance.

LSBC – DIMENSIONAL DATA

MODELS: LSBC 025 THRU LSBC 030

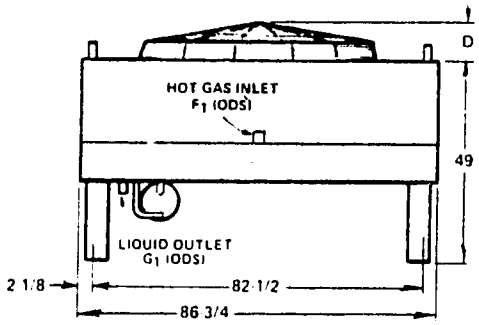

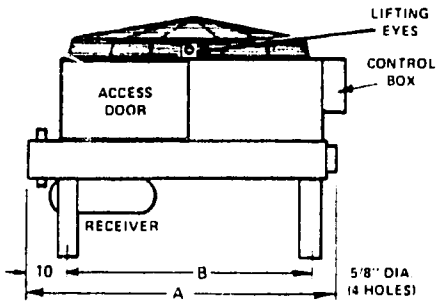

MODEL: LSBC 040

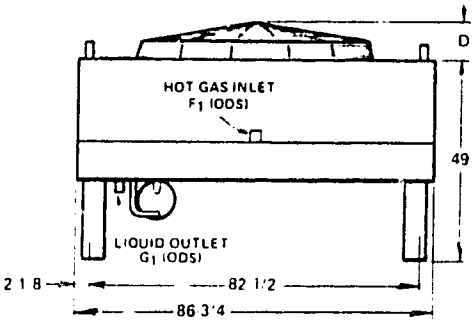

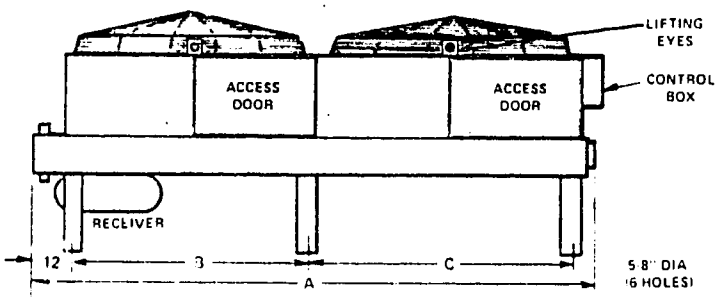

MODEL: LSBC 050

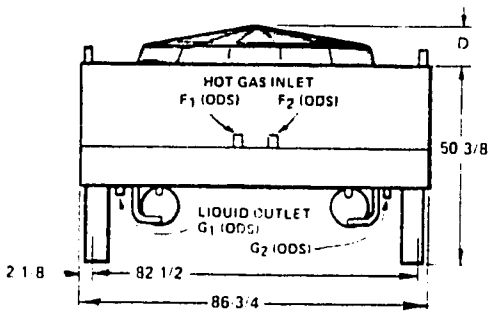

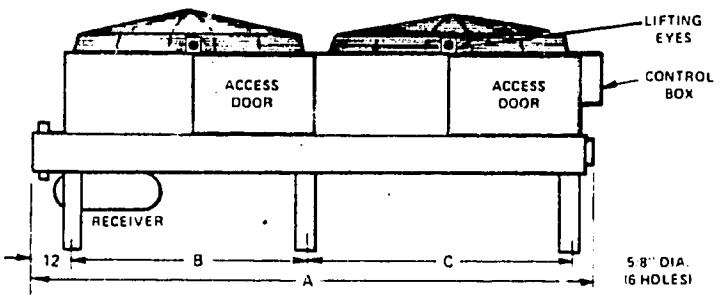

MODELS: LSBC 060 THRU LSBC 120

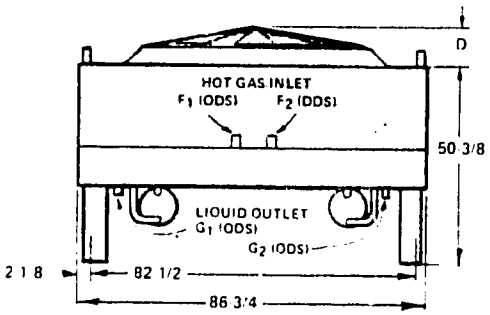

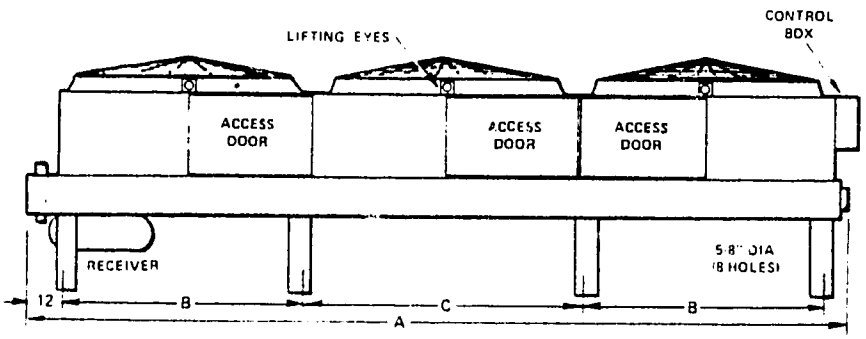

MODEL	A	B	C	D	F_1	F_2	G_1	G_2
LSBC 025	68-1/2	52	–	10-3/4	1-5/8	–	1-1/8	–
LSBC 030	88-1/2	72	–	10-3/4	2-1/8	–	1-1/8	–
LSBC 040	130-1/2	51-3/8	60-5/8	10-3/4	2-1/8	–	1-1/8	–
LSBC 050	170-1/2	71-3/8	80-5/8	10-3/4	1-5/8	1-5/8	1-1/8	1-1/8
LSBC 060	190-1/2	51-3/8	69-1/4	10-3/4	2-1/8	2-1/8	1-1/8	1-1/8
LSBC 075	250-1/2	71-3/8	89-1/4	12	2-1/8	2-1/8	1-1/8	1-3/8
LSBC 090	250-1/2	71-3/8	89-1/4	12	2-1/8	2-5/8	1-1/8	1-3/8
LSBC 100	250-1/2	71-3/8	89-1/4	12	2-1/8	2-5/8	1-1/8	1-3/8
LSBC 120	250-1/2	71-3/8	89-1/4	12	2-1/8	2-5/8	1-1/8	1-5/8

DUNHAM-BUSH

AIR CONDITIONING, REFRIGERATION, HEATING PRODUCTS AND ACCESSORIES

MAIN OFFICES

175 SOUTH STREET WEST HARTFORD, CONNECTICUT 06110

FACTORIES

WEST HARTFORD DIVISION
179 South Street
West Hartford, Connecticut
06110

HARRISONBURG DIVISION
101 Burgess Road
Harrisonburg, Virginia
22801

MARSHALLTOWN DIVISION
811 East Main Street
Marshalltown, Iowa
50158

RIVERSIDE DIVISION
1850 Massachusetts Ave.
Riverside, California
92507

SUBSIDIARIES

DUNHAM-BUSH of Canada Limited
140 Wendell Avenue
Weston, Ontario

DUNHAM-BUSH, LTD.
Fitzherbert Road, Farlington
Portsmouth, Hampshire, England

DUNHAM-BUSH INTERNATIONAL: 175 South Street, West Hartford, Connecticut 06110, U.S.A.
CABLE: DUNBUSH or TELEX: 994469

SALES OFFICES

ALABAMA
Birmingham
Mobile

ARIZONA
Phoenix

ARKANSAS
Little Rock

CALIFORNIA
Arcadia
Los Angeles
San Diego
San Francisco

COLORADO
Denver

CONNECTICUT
Hartford
New Haven

FLORIDA
Jacksonville
Miami
Orlando
Tampa

GEORGIA
Atlanta

HAWAII
Honolulu

ILLINOIS
Chicago
Peoria
Rockford

INDIANA
Indianapolis
Michigan City

IOWA
Des Moines

KANSAS
Lenexa

KENTUCKY
Louisville

LOUISIANA
New Orleans
Shreveport

MAINE
Lewiston

MARYLAND
Baltimore
Silver Spring

MASSACHUSETTS
Boston
Springfield

MICHIGAN
Detroit
Grand Rapids
Kalamazoo

MINNESOTA
Minneapolis

MISSISSIPPI
Jackson

MISSOURI
Kansas City
St. Louis

MONTANA
Billings
Great Falls

NEBRASKA
Omaha

NEW JERSEY
Little Falls
South Amboy
Union

NEW MEXICO
Albuquerque

NEW YORK
Albany
Buffalo
New York City
Rochester
Syracuse

NORTH CAROLINA
Charlotte
Greensboro

OHIO
Akron
Cincinnati
Cleveland
Columbus
Dayton
Delaware
Toledo

OKLAHOMA
Oklahoma City
Tulsa

OREGON
Portland

PENNSYLVANIA
Harrisburg
Philadelphia
Pittsburgh
Pittston

RHODE ISLAND
Providence

SOUTH CAROLINA
Columbia
Greenville

TENNESSEE
Chattanooga
Memphis
Knoxville
Nashville

TEXAS
Austin
Corpus Christie
Dallas
El Paso
Fort Worth
Houston
Lubbock
San Antonio

UTAH
Salt Lake City

VIRGINIA
Alexandria
Richmond

WASHINGTON
Seattle
Spokane

WEST VIRGINIA
Barboursville

WISCONSIN
Milwaukee

DUNHAM-BUSH, INC. • West Hartford, Connecticut 06110, U.S.A.

one of The Signal Companies

6150-10M-6128-1E-179

Exhibit C-5

FORM NO. 3440B

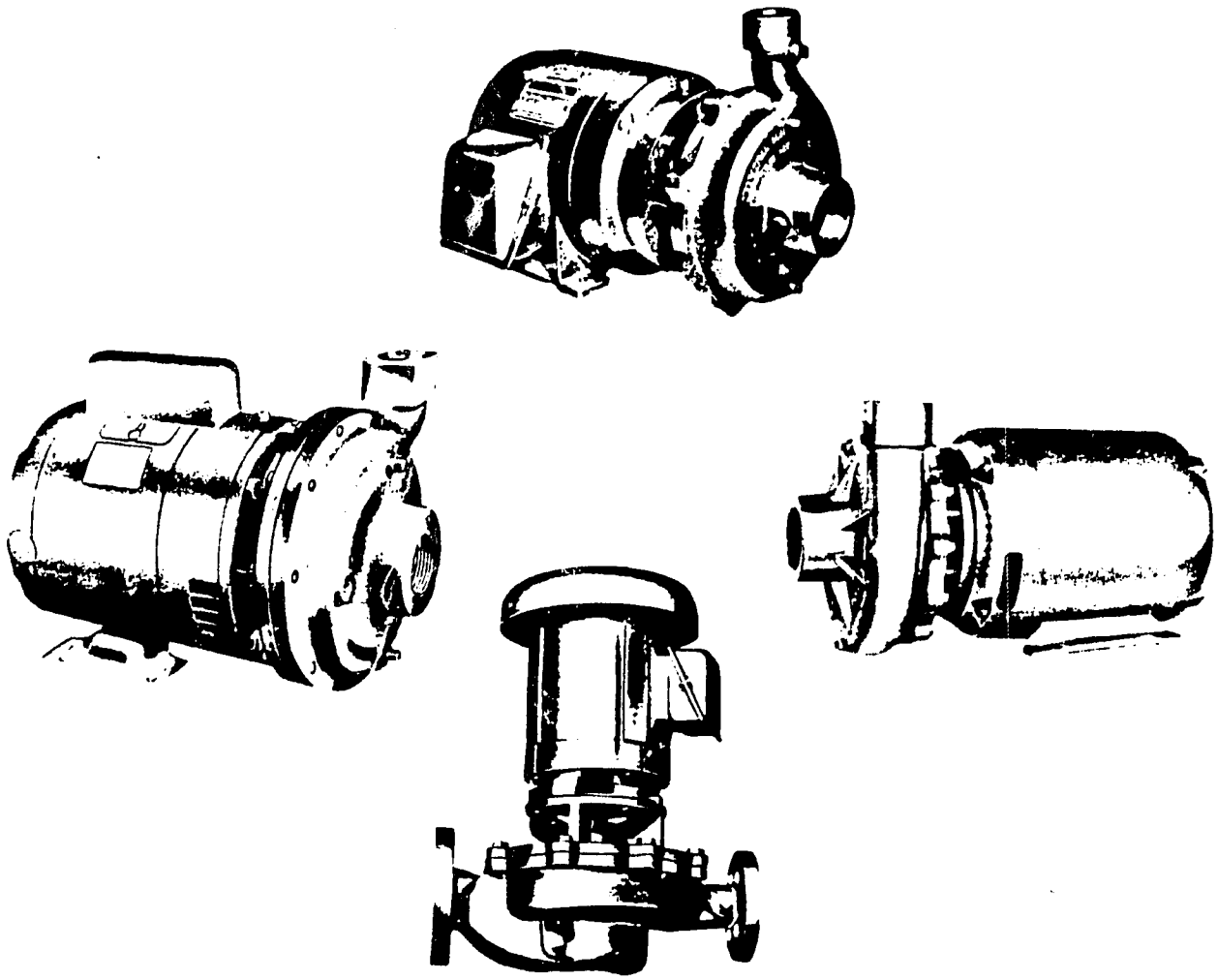

DUNHAM-BUSH

CENTRIFUGAL PUMPS
TYPE A5, A7, A9 AND PM7

Installation, Operation and Maintenance Instructions

CENTRIFUGAL PUMPS
TYPE A5, A7, A9 AND PM7

INDEX

DESCRIPTION	PAGE
INTRODUCTION	1
SECTION I INSTALLATION	
LOCATION	1
FOUNDATION	1
MOUNTING	1
PIPING	1
SUCTION PIPING	1
DISCHARGE, PIPING	2
PIPING FOR SPARE PUMPS	2
INSTALLING PUMP	2
SECTION II OPERATION	
PUMP STARTING	2 - 3
OPERATING AT REDUCED CAPACITY	3
OPERATING ROUTINE	3
STOPPING	3
SECTION III MAINTENANCE	
A5 PUMP DISASSEMBLY AND ASSEMBLY	3 - 4
A9 SERIES 'A' PUMP DISASSEMBLY AND ASSEMBLY	4 - 5
A7/PM7 DISASSEMBLY AND ASSEMBLY	5 - 7
A7A/PM7A DISASSEMBLY AND ASSEMBLY	7 - 9
SECTION IV TROUBLE SHOOTING, NOMENCLATURE, ORDERING PROCEDURE AND PARTS LIST	
TROUBLE SHOOTING	9
NOMENCLATURE	10
ORDERING PROCEDURE	10
A5 PUMPS AND PARTS LIST	
1/3 HP, 1/2 HP, AND 3/4 HP	11
1 HP, 1½ HP AND 2 HP	12
A9 SERIES 'A' PUMPS AND PARTS LIST	
1/2 HP, 3/4 HP AND 1 HP	13
1 1/2 HP	14
2 HP	15
3 HP	16
5 HP	17
7 1/2 HP	18
10 HP AND 15 HP	19
A7 PUMPS AND PARTS LIST	
3/4", 1 1/4" AND 1 1/2"	20
2" AND 2 1/2"	21
PM7 PUMPS AND PARTS LIST	
1", 1 1/4" AND 1 1/2"	22
2" AND 2 1/2"	23
A7A PUMPS AND PARTS LIST	
3/4", 1 1/4" AND 1 1/2"	24
PM7A PUMPS AND PARTS LIST	
1", 1 1/4" AND 1 1/2"	25

INTRODUCTION

The Dunham-Bush Type A5, A7 and A9 are radially split, single stage, motor mounted centrifugal pumps. The PM7 is a radially split, single stage, close coupled pipe mounted centrifugal pump. These pumps are supplied with an end face mechanical shaft seal installed, which is especially selected for reliability and life on the particular pump application. All pumps are supplied as complete units including motor.

SECTION – 1
PUMP INSTALLATION

A. LOCATION

1. For satisfactory operation of any centrifugal pump it is necessary that adequate "Net Positive Suction Head" (NPSH) be available at the pump suction connection (NPSH is the total head in feet absolute, less the vapor pressure of the liquid in feet absolute, available to the pump). For this reason the pump should be located as close to the liquid source as possible.
2. Adequate head room should be provided for the use of installing equipment.
3. Adequate space should be allowed for inspection during pump operation.

B. FOUNDATION

1. The foundation must be solid and substantial enough to absorb mechanical vibration. In general concrete foundations are the most satisfactory and when used, bolts should be supplied which are imbedded for pump footing. Bolts should be long enough to insure proper tightening (minimum of six (6) threads should protrude beyond nut), and it is recommended that each bolt (standard or "J" type) be fitted with a pipe sleeve that is approximately 2½ times the bolt diameter and whose length is twice the inside diameter of the sleeve. When using a standard bolt (figure 1) a washer should be used to support the head of the bolt in the sleeve. After the concrete foundation has been poured, the pipe sleeve remains in place allowing for alignment with the holes in the motor feet.
2. When "J" type bolts (figure 2) are used the same procedure is used except that no washer is needed.
3. If the foundation has been laid, holes may be drilled and expansion bolts used to anchor the pump to the foundation.

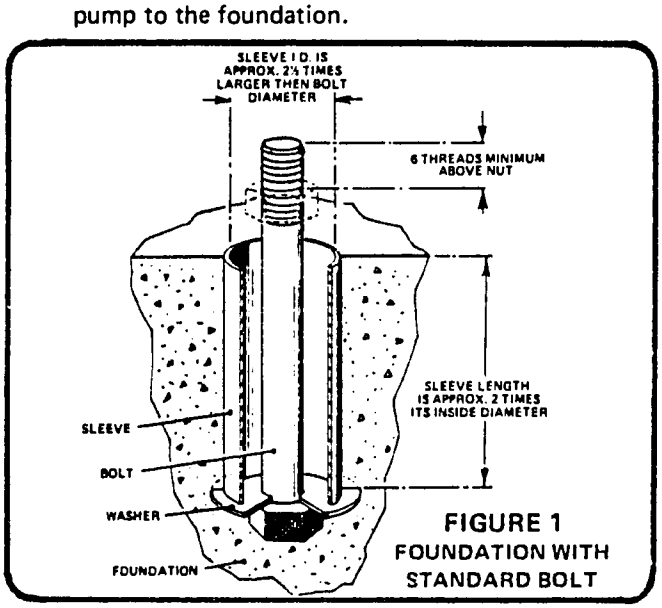

FIGURE 1
FOUNDATION WITH STANDARD BOLT

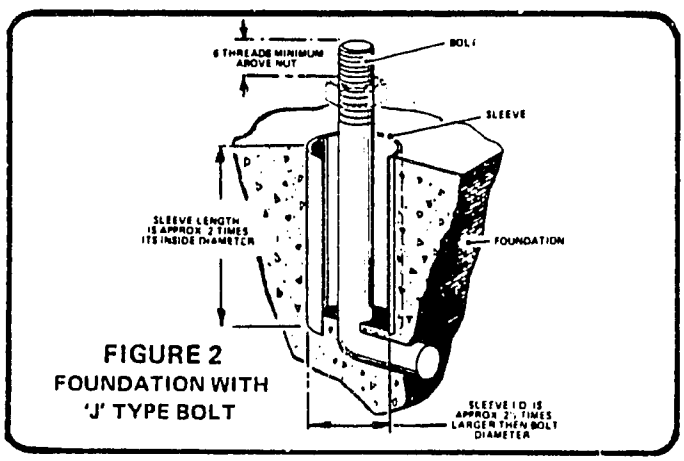

FIGURE 2
FOUNDATION WITH 'J' TYPE BOLT

C. MOUNTING PUMP

Foot Mounted

1. Uncrate the pump leaving all instructions attached and install at its' place of operation.
2. Locate the leveling plates and shims at each foundation bolt.
3. Level the motor perpendicular to shaft, shimming as necessary.
4. Level the motor parallel to shaft and tighten the nuts on the foundation bolts evenly.

Pipe Mounted

1. Horizontal Lines – Normally the pump is mounted with the motor perpendicular to the ground with the motor end up. The piping must be adequate to support both the piping and pump.
2. Vertical Lines – The motor will be parallel to the floor and may require additional support other than that offered by the piping.

D. PIPING

1. Both suction and discharge piping should be as short and as direct as possible. There should be as few fittings and bends as possible. Bends, where used should be of the long radius variety.
2. Piping should be supported near the pump to prevent strains from being transmitted to the pump, and piping at the pump suction and discharge should be as large or larger than the openings in the pump.
3. Gate valves and pressure gages should be installed in both the suction and discharge line to facilitate pump maintenance and performance checks.

E. SUCTION PIPING

1. Suction piping must be free of vapor trapping pockets
2. In horizontal piping leading to the pump only eccentric-reducers should be used (See Fig. 3 and 4).
3. The suction pi ust be free from air leaks and provisions should be made for the expansion of hot lines.

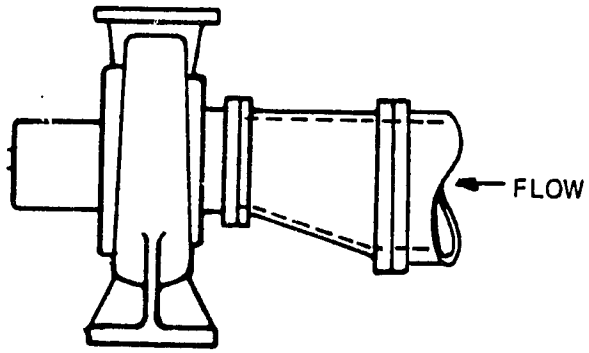

FIGURE 3
CORRECT SUCTION PIPING FOR ECCENTRIC REDUCER

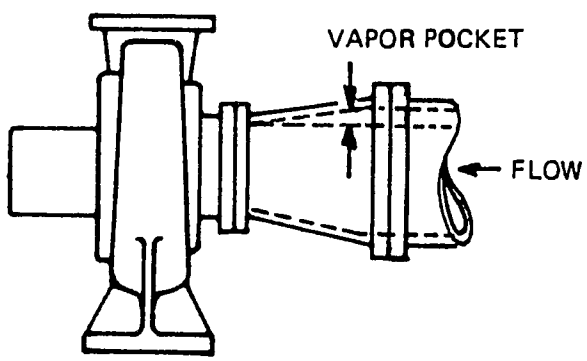

FIGURE 4
INCORRECT SUCTION PIPING FOR ECCENTRIC REDUCER

4. It is recommended that a strainer be installed near the pump suction inlet to catch scale or other foreign material. A pressure gage installed on each side of the strainer can be used for measuring the pressure drop across the strainer.

5. If a strainer or foot valve is to be used on the inlet end of the suction line, the free area through the strainer or valve should be approximately 2½ to 4 times the area of the suction pipe.

F. DISCHARGE PIPING

1. On some installations, a check valve and balancing cock in addition to a gate valve may be required in the discharge piping. The check valve would be used to prevent liquid from running back through the pump in case of failure of the motor. The balancing cock is used to control the pumps' operating capacity by providing a changeable control in the piping system. The gate valve would be used in priming, starting and shutting down the pump.

2. When valves are required in the discharge line, they should be located as near as possible to the pump.

3. In some applications when the pump may be operated with zero flow, provisions should be made for recirculating a portion of the liquid from the discharge to the suction of the pump to reduce the possibility of overheating.

G. PIPING FOR SPARE PUMPS

Spare pumps in high temperature service should be piped so that hot liquid from the discharge of the operating pump circulates continuously through a by-pass to the spare pump and back to the suction of the operating pump. This can greatly reduce thermal shock when the spare pump is started.

H. INSTALLING PUMP

1. Make up the piping to the suction and discharge connections of the pump. All piping must be properly supported by hangers and not by the pump. PM7 pumps must be supported within 18" of pump suction and discharge connections.

2. Wire the pump motor for the voltage required as specified on the wiring diagram located on the motor nameplate, or in cover of the motor terminal box. All wiring must be in accordance with local regulations. If the motor is damaged due to improper wiring, the guarantee is void.

SECTION – 2
PUMP OPERATION

A. STARTING PUMP

1. Open the suction and discharge valves to the pump. These pumps have a mechanical seal and must NOT be run dry. Open the cock at the top of the pump case to vent out any air.

   NOTE: a. If the pump is above the level of the liquid to be pumped, close the discharge valve. If the pump is below the level of the liquid, open the discharge valve 1½ to 2 turns.

   b. Prime the pump. All air and vapor must be removed. The pump case and suction pipe must be filled with liquid before the pump is started.

2. Rotate the pump shaft by hand (if possible) to be sure the pump is not binding. On some models the end of the motor shaft has a screwdriver slot. It may be used to turn the shaft. A check for sticking of the shaft should also be made after a prolonged pump shutdown.

3. Start the pump and check for correct rotation according to the arrow on the case. If it is running in the

wrong direction on three phase current, change any two leads to the motor. You must disconnect the power before changing the wiring.

4. Lack of capacity and head may indicate the passageways of the pump impeller have become clogged with foreign matter or that the motor speed is low. If speed of the motor is low, the wiring connections at the motor should be checked for miswiring or looseness. If the pump is wired for 460 volt current, but is actually operating on 230 volt current, the motor will never come up to proper speed and may burn out. If low voltage occurs, notify local power company. Slugging of air is another cause of low capacity and head on a closed system. Be sure the system is properly vented of all air – See further notes under Trouble Shooting – Section IV.

WARNING - DO NOT ATTEMPT TO OPERATE PUMP WITH SUCTION VALVE CLOSED!

5. As soon as the pump is up to full speed, slowly open the discharge valve until it is completely open. Do not let the pump run with the discharge valve closed.

6. Check the pressure gages on each side of the strainer in the suction line. A pressure drop across the strainer indicates it is becoming clogged with dirt or scale. In this case, the pump should be shut down and the strainer screen cleaned or replaced. A clogged strainer can cause damage to the pump.

7. The pump should be shut down if motor bearings overheat, if there is undue vibration or noise, or if it fails to develop its rated discharge pressure at operating speed.

B. OPERATING AT REDUCED CAPACITY

If the pump is connected to a constant speed driver or motor, the capacity of the pump can be reduced by throttling the discharge. When throttling the discharge, a by-pass connection may be used to by-pass sufficient liquid back to the suction inlet to prevent overheating.

C. OPERATING ROUTINE

1. Check the bearing temperatures periodically. If there is overheating, check the motor to insure adequate lubrication. Normal inspection consists of periodic checks of motor lubrication.

2. Lubricating the pump motor should be done in accordance with manufacturer's recommendations.

3. Check all seals for leakage.

4. Check the suction and discharge pressure gages. If the differential pressure drops critically, shut down the pump at once.

D. STOPPING

The pump should be shut down rapidly to keep liquid in the pump and to prevent the parts from seizing. After stopping the driver, close the discharge valve and then the inlet valve, in that order. When pumps are operating in parallel, it is sometimes necessary to close the discharge valve immediately after stopping the driver to prevent reverse rotation. If the pumps are to remain idle under freezing conditions, precautions, such as draining the case, should be taken to avoid damage.

SECTION - 3
MAINTENANCE INSTRUCTIONS

A5 PUMP DISASSEMBLY AND ASSEMBLY
(Ref. Fig. 5 & 6)

1. Disconnect the power to pump.

2. Close the valves in suction and discharge lines or drain the system.

3. Remove the 8 hex head screws (11) holding the head (7) to the case (1). Disassemble the head (7) from the case (1) by sliding the motor back.

4. Remove the case gasket (5) and clean the gasket surfaces on the case (1) and head (7).

5. Remove the plug covering the shaft end in motor.

6. Hold motor shaft from turning by using a large bladed screwdriver in slot of motor shaft and remove the impeller nut (3) by turning it counter clockwise.

7. Using a screwdriver in the shaft slot remove the impeller (2) and stop washer (4) from shaft by turning it counter clockwise.

8. Remove the head (7) and mechanical seal (6) from the shaft by first removing 4 hex cap screws (10) and then pulling the head (7) from the motor (8).

9. Remove slinger (9) from the shaft.

10. Remove stationary mechanical seal (6a) from the head (7).

11. Clean the motor shaft with solvent and inspect it for the scrapes, gouges and scratches. Lightly polish the shaft if necessary to remove blemishes.

12. Lightly lubricate the O.D. of the stationary member of the new seal. With the seal seat towards the impeller, press the seal firmly into the head recess. Make sure that the seat is level and square.

NOTE: Extreme caution must be exercised not to scratch, gouge or otherwise mar the sealing surface of the mechanical seal or leakage will likely result.

13. Replace the slinger (9) on the shaft.

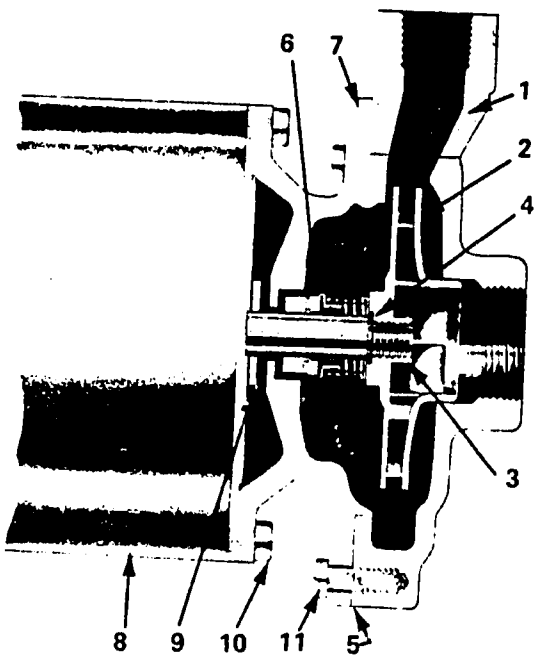

FIGURE 5
A5 PUMP

For Additional Information
On Seal (6)
Refer to Figure 6

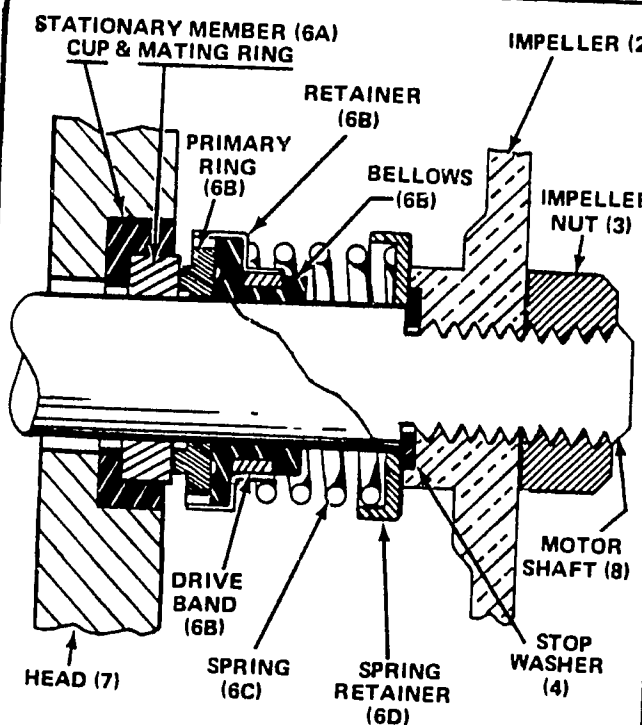

FIGURE 6
MECHANICAL SHAFT SEAL
FOR A5 PUMPS

14. Mount the head (7) on the motor (8) by using four hex head cap screws (10).

15. To assemble mechanical seal rotating element (6) onto the shaft:

    a. Lightly lubricate the I.D. of new seal boot (6B) and slide it over shaft with the carbon seal face towards the stationary seal face until seal faces meet.

    b. Place spring (6C) on the rotating member (seal boot 6B) so it seats properly against the shoulder.

    c. Place spring retainer (6D) against the spring. Be sure the rolled edge faces toward the spring.

16. Replace the stop washer (4) and screw the impeller (2) onto the shaft while holding shaft stationary with screwdriver placed in motor shaft slot. The stop washer has a radius machined on one of the outer diameter edges. The washer is to be assembled with this edge against the impeller. Make sure impeller is snugged up tight. Use a screwdriver to pry the spring retainer (6D) away from the impeller (2) to be sure that the retainer isn't caught between the shaft shoulder and impeller.

17. Replace impeller nut (3), snug nut up tight.

18. Place the gasket (5) on the head (7) and assemble both to the case (1) using 8 hex head cap screws (11).

19. Remount motor to base.

20. Open valves to pump and refill the system and check for leaks.

21. Reconnect power to pump.

B. A9 PUMP SERIES A DISASSEMBLY AND ASSEMBLY (Ref. Fig. 7 & 8)

1. Disconnect the power to pump.

2. Close the valves in suction and discharge lines or drain the system.

3. Remove the 12 hex head screws (13) holding the head (8) to the case (1). Disassemble the head (8) from the case (1) by sliding the motor back.

4. Remove impeller nut (3) by turning it counter clockwise.

5. Remove impeller (2) and its key (4) from the shaft.

6. To remove head (8), mechanical seal (7), gasket (5) and sleeve (11) remove the 4 hex head cap screws (14) and pull the head (8) from motor (9). Caution must be exercised not to scratch, mar or gouge the sleeve during this operation.

7. Remove slinger (10) and shield (12) from shaft.

8. Remove the mechanical seal stationary seat (7a) from the head (8).

9. Remove the gasket (6) from head (8) and clean gasket surfaces on both the case (1) and head (8).

10. Clean motor shaft with solvent.

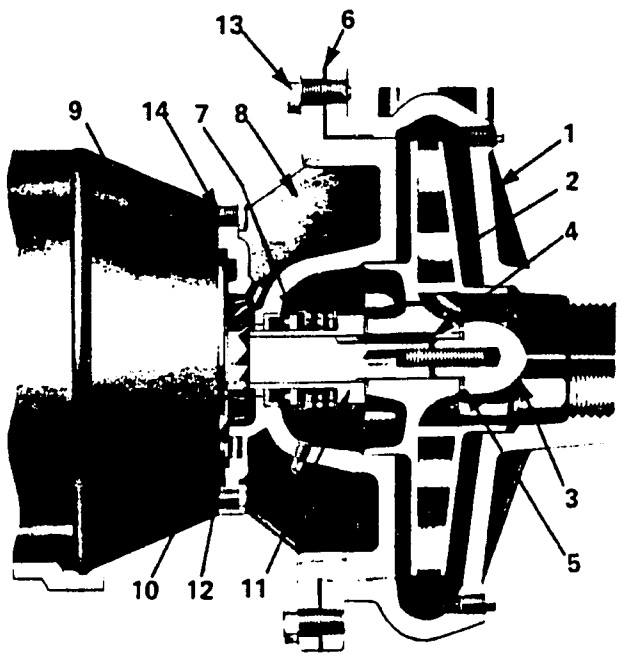

FIGURE 7
A9 PUMP

For Additional Information
On Seal (7)
Refer to Figure 8.

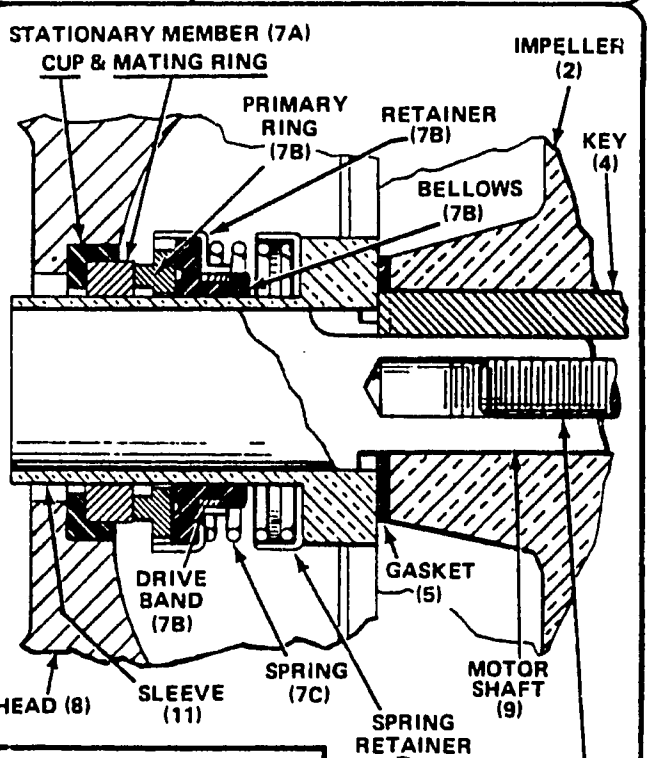

FIGURE 8
MECHANICAL SHAFT SEAL
FOR A9 PUMPS

11. Lightly oil O.D. of new seal stationary seat (7A). With the sealing face towards impeller, press the seal seat firmly into the head recess, being sure the seat is level and square.

Caution: Extreme care must be exercised not to scratch, mar or gouge the sealing face of the stationary seal or leakage will occur.

12. Replace shield (12) and slinger (10) onto shaft.

13. Mount the head (8) to the motor (9) by using 4 hex head cap screws (14).

14. To assemble mechanical-seal-rotating element (7B, C & D) onto the sleeve (11):

    a. Slip spring retainer (7D) over sleeve (11) with the bent edge facing away from the shoulder.

    b. Place spring (7C) over sleeve.

    c. Lightly lubricate I.D. of new seal boot (7B) and slide it over the sleeve with the carbon seal face away from sleeve shoulder.

15. Place a light coat of Teflon paste on I.D. of sleeve and slide it over the shaft until seal faces butt together firmly and squarely.

16. Brush both sides of gasket (5) with Teflon paste and position it on the sleeve (11).

17. Insert key (4) in keyway and replace the impeller (2) on shaft.

18. Place a small amount of Teflon paste on flat side of impeller nut (3) and replace it on the shaft. Turn the impeller to check its alignment.

19. Replace the gasket (6) and assemble the pump head (8) to the pump case (1) using 12 hex head cap screws (13).

20. Remount the motor to base.

21. Open the valves to pump and refill the system and check the pump for leaks.

22. Reconnect power to the pump.

C. A7/PM7 PUMP DISASSEMBLY AND ASSEMBLY (Ref. Fig. 9 & 10) WITH JM FRAME MOTOR

1. Disconnect power to pump.

2. Close the valves in suction and discharge lines or drain the system.

3. (PM7 Only). Remove the seal flush piping line (8 & 9) connected between the head (7) and pump case (11).

4. Remove 8 hex head cap screws (1), holding the head (7) to the case (11) and remove motor head assembly.

For Additional Information
On Seal (3)
Refer To Figure 10.

1 2 3 4 5 6 7 8 9 10 11 12 13 14 15 16 17 18 19 20

FIGURE 9
PM7/A7 PUMPS

MOTOR SHAFT (6)
HEAD (7)
RETAINER (3B)
DRIVE BAND (3B)
SPRING (3C)
SPRING RETAINER (3D)
KEY (2)
STATIONARY MEMBER (3A)
CUP & MATING RING
PRIMARY RING (3B)
BELLOWS (3B)
SLEEVE (12)
GASKET (14)
IMPELLER (13)
IMPELLER SCREW (18)

FIGURE 10
MECHANICAL SHAFT SEAL
FOR A7/PM7 PUMPS

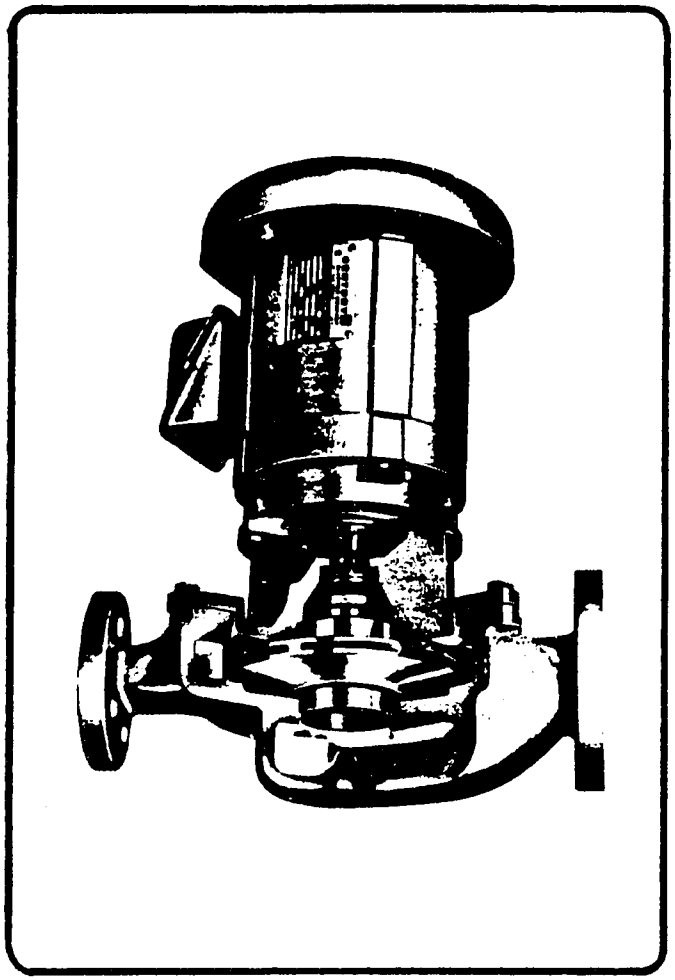

5. Remove the case gasket (10) and clean the gasket surfaces of both the head (7) and case (11).

6. Remove the impeller screw (18) by turning it counter clockwise and remove washers (19) and (20) and the gasket (15). Clean the gasket surfaces.

7. Remove the impeller (13) and its key (2) from the shaft motor.

8. Remove the mechanical seal (3) and sleeve (12) from the shaft. Remove gasket (14) from either the sleeve or impeller and clean the gasket surfaces.

9. Remove head (7) from the motor (6) by removing 4 hex head cap screws (4).

10. Clean the motor shaft with solvent.

11. Remove the stationary member (3A) of the mechanical seal from the head (7).

12. Lightly lubricate the O.D. of new mechanical seal stationary seal (3A) and press it into the recess of the head (7). Be sure that the seal is level and square.

    Caution: Extreme care must be exercised not to scratch, mar or gouge the sealing face of the stationary seal or leakage will occur.

13. Assemble the head (7) onto the motor (6) using 4 hex head cap screws (4).

14. Assemble the rotating seal elements onto the sleeve (12).
    a. Slip spring retainer (3D) over sleeve (12) with the bent edge facing away from the shoulder.
    b. Place spring (3C) over sleeve.
    c. Lightly lubricate I.D. of new seal boot (3B) and slide it over sleeve with the carbon seal face away from sleeve shoulder.

15. Place a light coat of Teflon paste on I.D. of the sleeve and slide it over the shaft until seal faces butt together firmly and squarely.

16. Brush both sides of gasket (14) with Teflon paste and position it on the sleeve (12).

17. Replace key (2) in keyway and slide impeller (13) onto shaft.

18. Brush both sides of gasket (15) with Teflon paste and place on impeller. Place the sealing washer (19) and washer (20) on the impeller cap screw (18) and tighten onto the shaft.

19. Place gasket (10) on head (7) and assemble it to the case (11) using 9 hex head cap screws (1).

20. Replace the seal flush piping (8 & 9).

21. Open the valves to the pump or refill system and check pump for leaks.

22. Reconnect power to pump and check again for leaks.

D. A7A/PM7A PUMP DISASSEMBLY AND ASSEMBLY (Ref. Fig. 11 & 12) WITH JET PUMP MOTOR

1. Disconnect power to pump

2. Close the valves in the suction and discharge piping or drain the system.

3. (PM7A Only) Remove the seal flush piping line (8 & 9) between the head (7) and case (11).

4. Remove 8 hex head cap screws (1) holding the head (7) to case (11) and remove the motor-head assembly.

5. Remove the case gasket (10) and clean the gasket surfaces of both the head (7) and the case (11).

6. Remove the impeller (12) and the impeller nut (15) by turning counter clockwise. Remove the impeller nut (15) from the impeller (12).

7. Remove loose mechanical seal parts from shaft.

8. Loosen 4 hex screws (4) between the motor and head and remove the retainer clips (3). Remove head (7) from motor (6).

9. Remove slinger (5) from the motor shaft and clean shaft with a solvent. Inspect it for scratches and lightly polish it if necessary to remove blemishes.

10. Remove mechanical stationary seal (2A) from head (7).

11. Lightly lubricate the O.D. of a new mechanical stationary seal (2A) and press into recess of head (7) making sure that the seal is level and square.

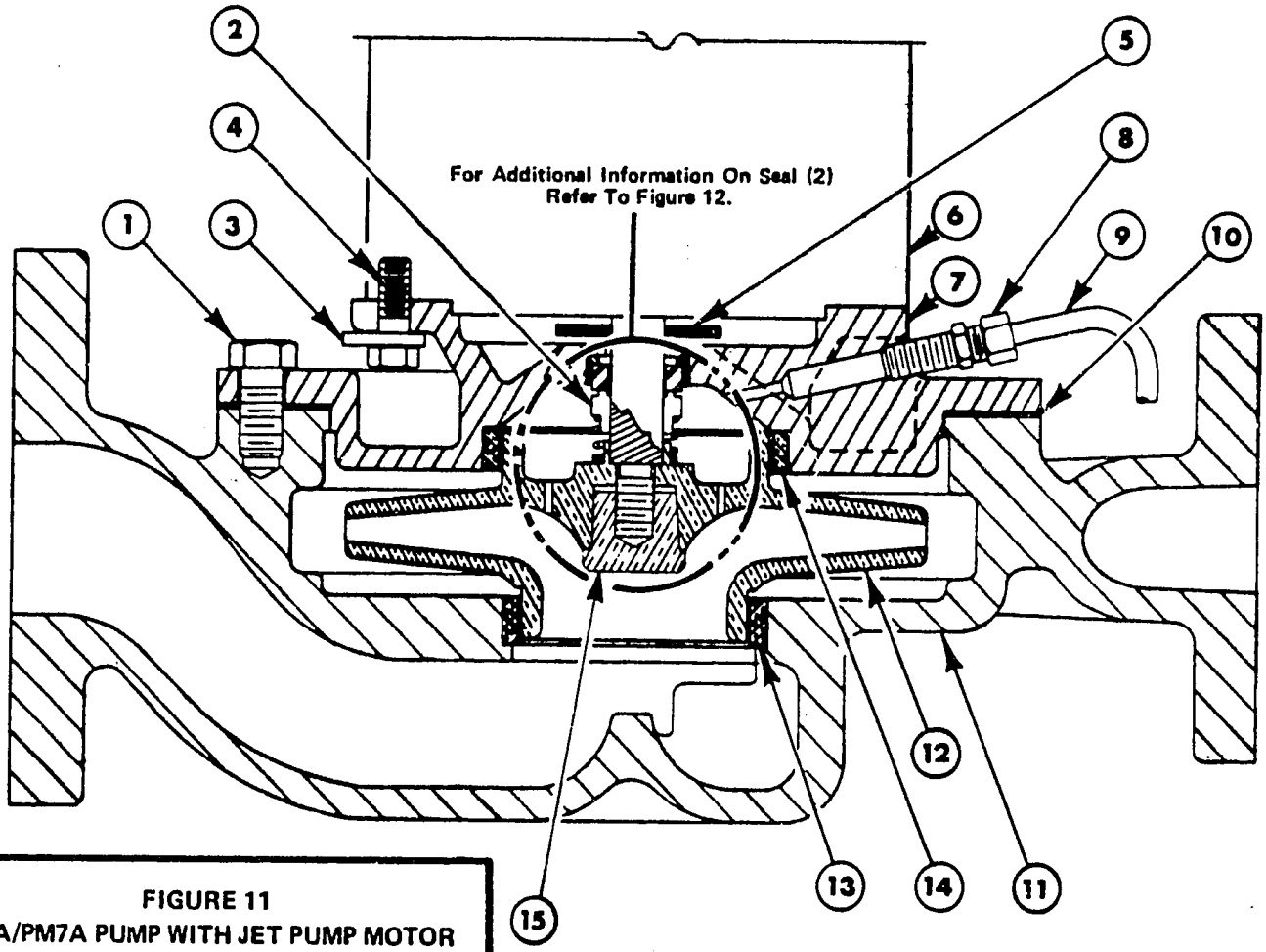

FIGURE 11
A7A/PM7A PUMP WITH JET PUMP MOTOR

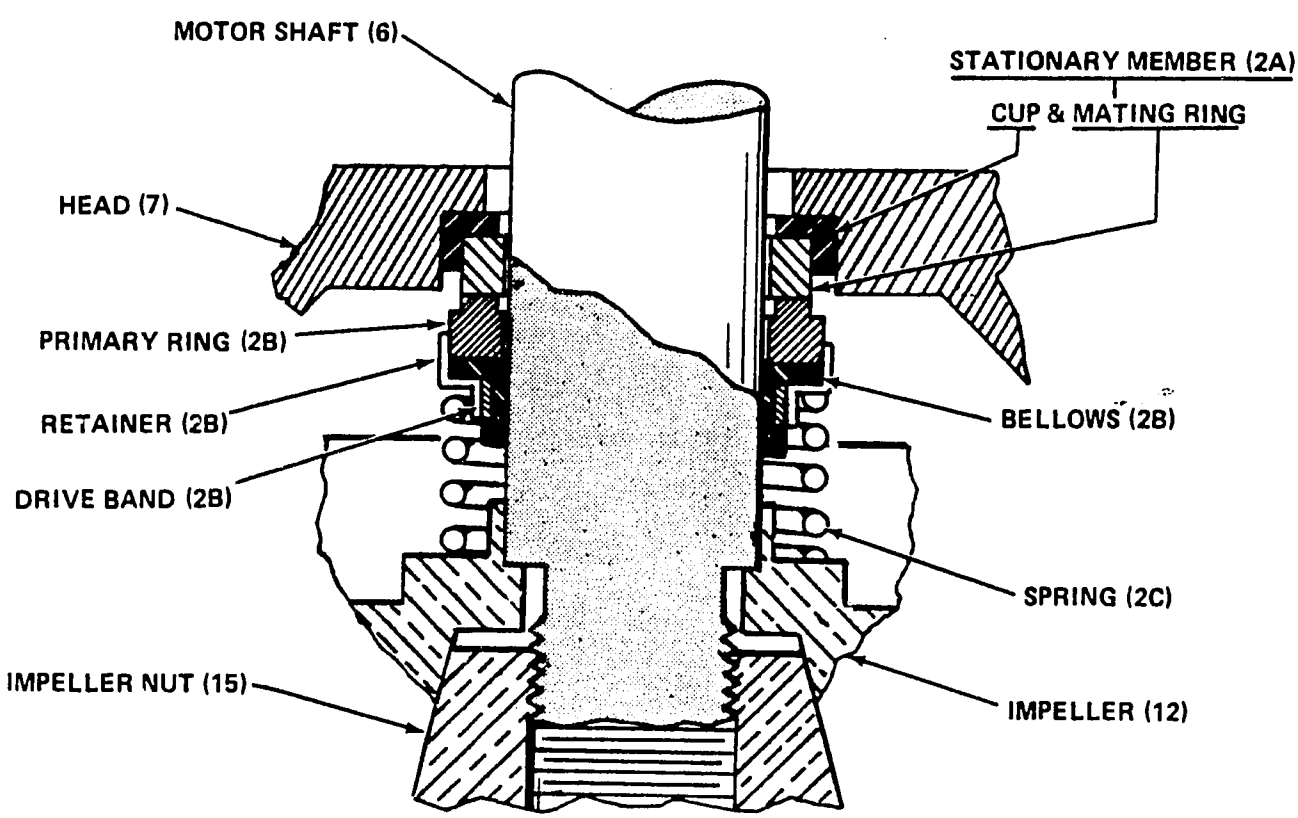

FIGURE 12
MECHANICAL SHAFT SEAL
FOR A7A/PM7A PUMPS

11. (Continued)

Caution: Extreme care must be exercised not to scratch, mar or gouge the face of the stationary seal as seal leakage will result.

12. Replace slinger (5) on the shaft and assemble the head (7) to the motor (6) by replacing the 4 retainer clips (3) on shank of cap screws (4). Tighten the cap screws.

13. Assemble rotating seal elements onto shaft.
    a. Lightly lubricate the I.D. of new seal boot (2B) and slide it over the shaft with the carbon seal face towards the stationary seal face.
    b. Place spring (2C) over shaft.

14. Replace impeller (12). Be sure the spring (2C) is seated properly against the impeller face.

15. Replace the impeller nut (15) and torque it to 15 lbs.

16. Place the gasket (10) on head (7) and assemble it to the case (11) using 8 hex head screws.

17. Replace the seal flush line (8 and 9).

18. Open valves to the pump and refill the system. Check the pump for leaks.

19. Reconnect power to pump and check again for leaks.

SECTION IV - TROUBLE SHOOTING

Operating troubles and their probable causes are as follows:

A. INSUFFICIENT OR NO DISCHARGE

1. Wrong direction of rotation.
2. Pump not primed.
3. Suction line is not full of liquid.
4. Air or vapor in suction line.
5. Suction pipe not submerged enough.
6. Available NPSH not sufficient.
7. Pump not up to rated speed.
8. Too much system head.

B. INSUFFICIENT PRESSURE

1. Wrong direction of rotation.
2. Suction line not full of liquid.
3. Air or vapor in liquid.
4. Air leaks in suction line.

B. INSUFFICIENT PRESSURE (Continued)

5. Suction line not submerged enough.
6. Available NPSH not sufficient.
7. Pump not up to rated speed.
8. Mechanical defects:
    a. Impeller damaged.
    b. Internal leakage (clearances).

C. CAVITATION AND NOISE

1. Air or gas in liquid.
2. Suction line not filled with liquid.
3. Suction line not submerged enough.
4. Available NPSH not sufficient.

D. PUMP LOSES SUCTION AFTER STARTING

1. Suction line not full of liquid.
2. Air leaks in suction line.
3. Air or vapor in liquid.
4. Air or vapor in suction line.
5. Suction line not submerged enough.
6. Available NPSH not sufficient.

E. EXCESSIVE POWER CONSUMPTION

1. Speed too high
2. Insufficient head.
3. Mechanical Defects:
    a. Shaft bent.
    b. Rotating element dragging.
    c. Piping improperly supported.

F. VIBRATION

1. Suction line not full of liquid.
2. Air or vapor in suction line.
3. Worn or loose motor bearings.
4. Rotating element out of balance.
5. Shaft bent.
6. Foundation not rigid.
7. Vibration in the driver.
8. Wrong location of control valve.
9. Piping improperly supported.

NOMENCLATURE

10 HP - 2½ - A9 - D 65 S - 2 - A

- **10 HP** — HORSEPOWER
- **2½** — DISCHARGE (IN INCHES)
- **A9** — TYPE MODEL
- **D** — IMPELLER STYLE
- **65** — IMPELLER DIAMETER
  - **6** — INCHES (6")
  - **5** — EIGHTS OF AN INCH (5/8")
  - TOTAL — 6-5/8 INCHES
- **S** — STANDARD IMPELLER
- **2** — RPM: 1 - 1750; 2 - 3450
- **A** — SERIES

ORDERING PROCEDURE

1. Complete part number and description is required when ordering.
2. When a part number is not known or shown in the parts catalog, the complete model and serial number of the unit on which the part is to be used must be given.
3. Send all orders to:

   DUNHAM-BUSH, INC., PARTS DEPT.
   811 E. MAIN ST.
   MARSHALLTOWN, IOWA, 50158

4. Prices can be found in the latest revision of Form 17448 and are for one item or kit as applicable.
5. Minimum billing is $25.00.
6. All prices are subject to federal, state, local or other taxes which may be applicable.
7. All orders requiring **special handling** will have a surcharge of $25.00 or the actual cost of this requirement whichever is greater.
8. Dunham-Bush reserves the right to substitute parts if they are interchangeable with those ordered. The invoice will reflect the cost of the actual part shipped.
9. Refer to the latest revision of Form 1278 for terms of sale.

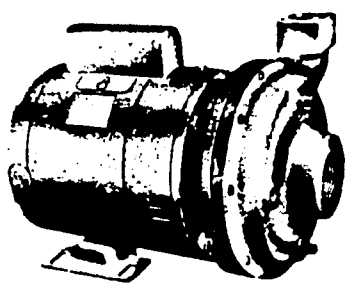

TYPE A5 PUMP

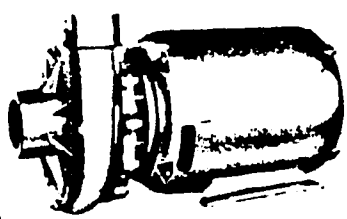

TYPE A9 PUMP

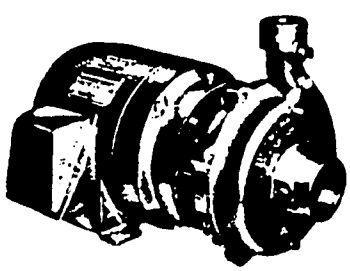

TYPE A7A AND A7 PUMPS

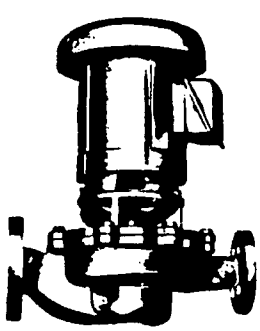

TYPE PM7 AND PM7A PUMPS

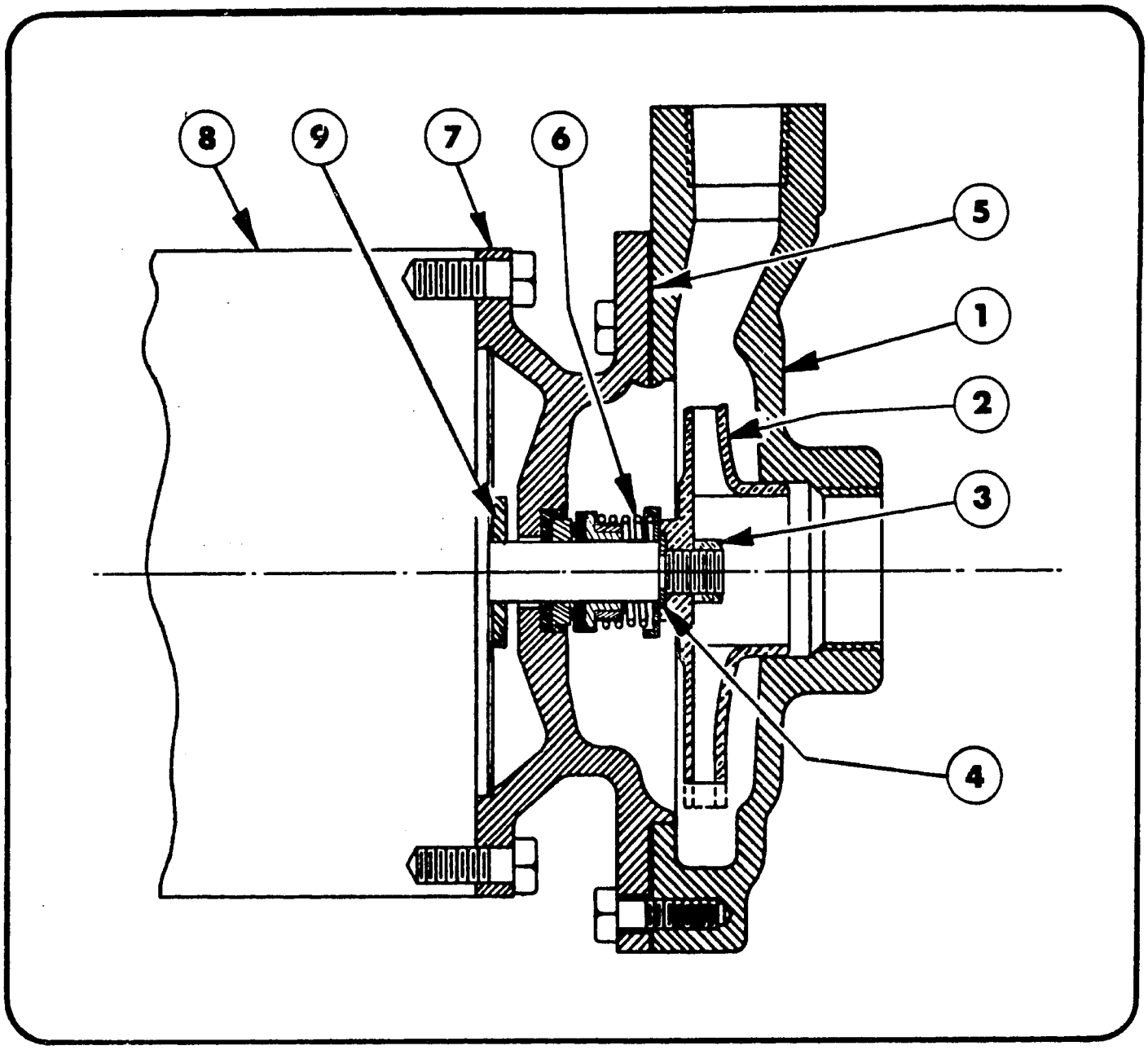

A5 PUMP AND PARTS LIST

1/3 HP, 1/2 HP AND 3/4 HP

	PART NUMBER AND DESCRIPTION	1/3 HP 1" 1φ & 3φ A5C2	1/3 HP 1 1/2" 1φ & 3φ A5C2	1/2 HP 1" 1φ & 3φ A5C2	1/2 HP 1 1/2" 1φ & 3φ A5C2	3/4 HP 3/4" 1φ & 3φ A5C2	3/4 HP 1 1/2" 1φ & 3φ A5C2
1	CASE (CAST IRON) CASE (BRONZE)	E6046 E6078	E6048 E6080	E6045 E6078	E6048 E6080	E6041 E6077	E6048 E6080
2	IMPELLER	D5197x 3 15/16"	D5203x 3 1/4"	D5197x 4 5/16"	D5203x 3 5/8"	D5193x 4 5/16"	D5203x 4 3/32"
3	NUT - IMPELLER	P-116	P-116	P-116	P-116	P-116	P-116
4	WASHER	C8709	C8709	C8709	C8709	C8709	C8709
5	GASKET-CASE *	D5352	D5352	D5352	D5352	D5352	D5352
6	SEAL-SHAFT *	472	472	472	472	472	472
7	HEAD (CAST IRON) HEAD (BRONZE)	E6042 E6081	E6042 E6081	E6042 E6081	E6042 E6081	E6042 E6081	E6042 E6081
8	MOTOR	Contact Dunham-Bush, Inc., Marshalltown, Iowa					
9	SLINGER	C8854	C8854	C8854	C8854	C8854	C8854

NOTES: 1. NON-STANDARD pump parts are not shown. When ordering repair parts, refer to page 10 of this catalog.
2. * = These parts are required when replacing shaft seal.

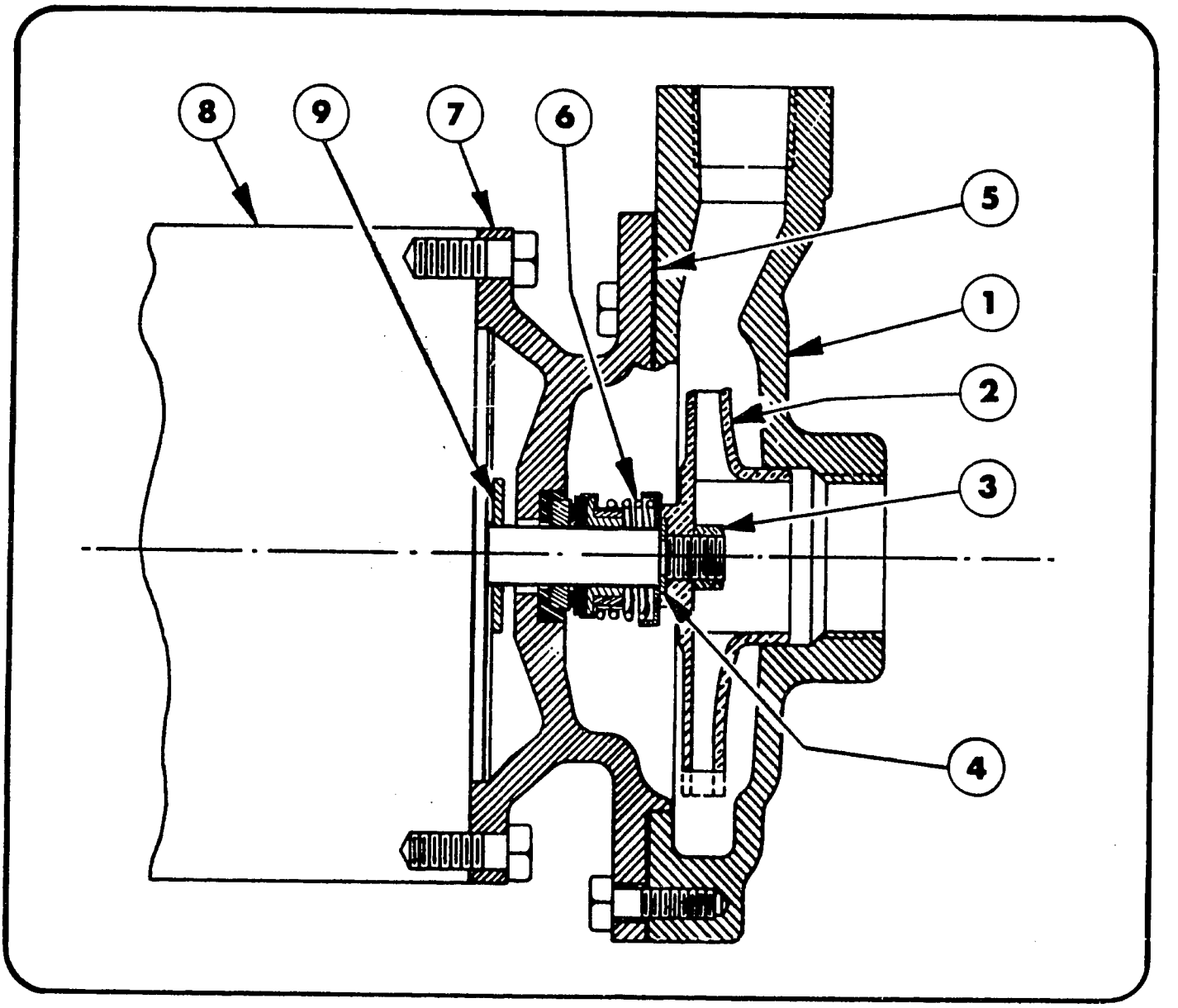

A5 PUMP AND PARTS LIST

1 HP, 1½ HP AND 2 HP

PART NUMBER AND DESCRIPTION	1 HP ¾" 1φ & 3φ A5A2	1 HP 1½" 1φ & 3φ A5C2	1½ HP ¾" 1φ & 3φ A5A2	1½ HP 1¼" 1φ & 3φ A5B2	2 HP 1" 1φ & 3φ A5A2	2 HP 1¼" 1φ & 3φ A5B2	2 HP 1½" 1φ & 3φ A5B2
1 CASE (CAST IRON) CASE (BRONZE)	E6041 E6077	E6048 E6080	E6041 E6077	E6047 E6079	E6046 E6078	E6047 E6079	E6048 E6080
2 IMPELLER	D5193x 4 9/16"	D5203x 4 5/16"	D5193x 5"	D5199x 4 1/8"	D5195x 4 1/2"	D5199x 4 1/2"	D5202x 4 1/8"
3 NUT–IMPELLER	P-116	P-116	P-116	P-116	P-116	P-116	P-116
4 WASHER	C8709	C8709	C8709	C8709	C8709	C8709	C8709
5 GASKET–CASE *	D5352	D5352	D5352	D5352	D5352	D5352	D5352
6 SEAL–SHAFT *	472	472	472	472	472	472	472
7 HEAD (CAST IRON) HEAD (BRONZE)	E6042 E6081	E6042 E6081	E6042 E6081	E6042 E6081	E6042 E6081	E6042 E6081	E6042 E6081
8 MOTOR	Contact Dunham-Bush, Inc., Marshalltown, Iowa						
9 SLINGER	C8854	C8854	C8854	C8854	C8854	C8854	C8854

NOTES: 1. NON-STANDARD pump parts are not shown. When ordering repair parts, refer to page 10 of this catalog.
2. * = These parts are required when replacing shaft seal.

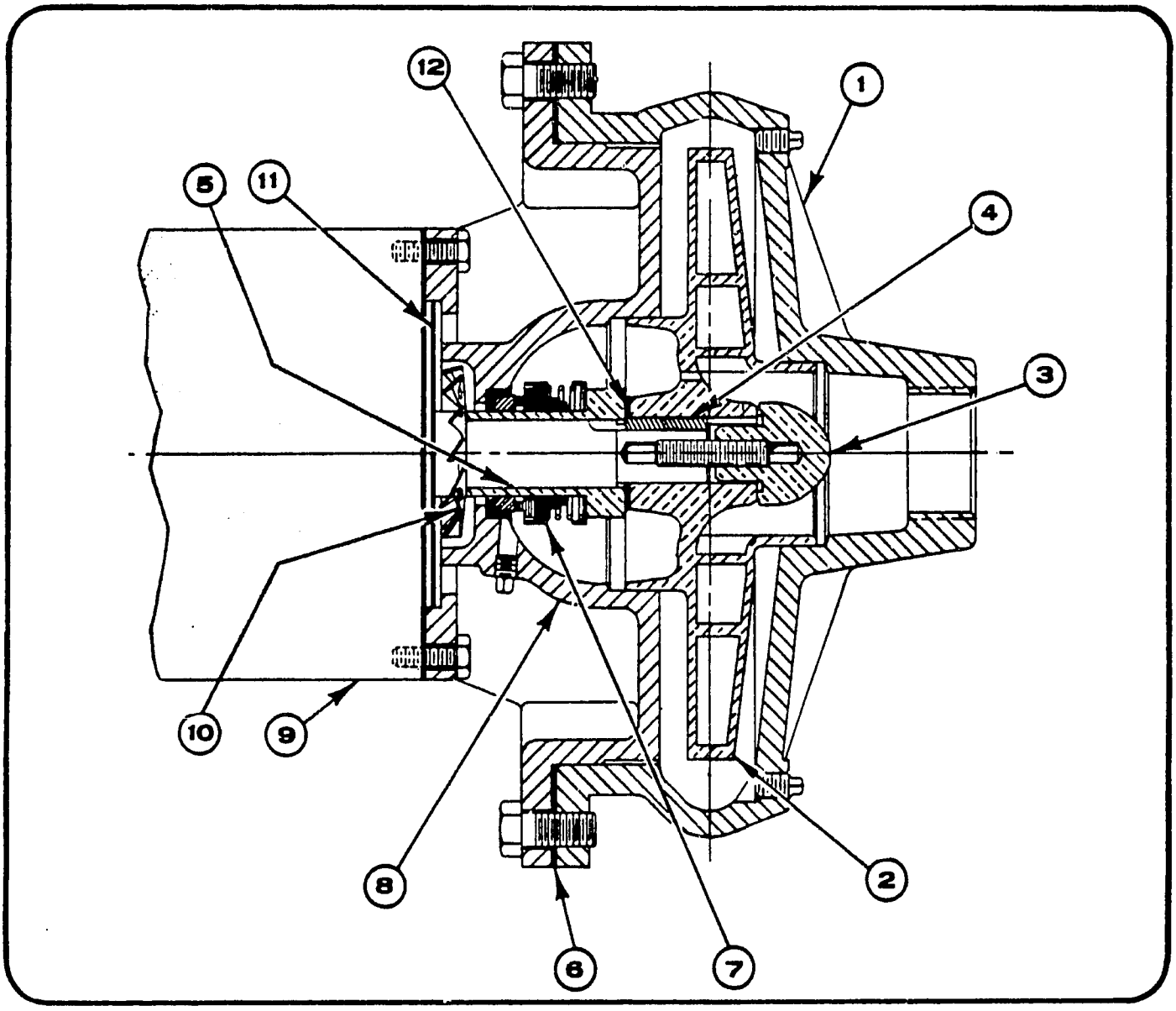

A9 PUMP AND PARTS LIST

SERIES A - ½ HP, ¾ HP AND 1 HP

	PART NUMBER AND DESCRIPTION	½ HP 1" 1ϕ & 3ϕ A9C1A	¾ HP 1" 1ϕ & 3ϕ A9C1A	¾ HP 1¼" 1ϕ & 3ϕ A9D1A	1 HP 1" 1ϕ & 3ϕ A9C1A	1 HP 1¼" 1ϕ & 3ϕ A9D1A	1 HP 2" 1ϕ & 3ϕ A9D1A
1	CASE (CAST IRON) CASE (BRONZE)	F541 D2-76	F541 D2-76	F540 D2-74	F541 D2-76	F540 D2-74	F544 D2-80
2	IMPELLER (BRONZE)	C2-3211X 6 1/16"	C2-3211X 6 3/4"	C2-3213X 4 15/16"	C2-3211X 7 5/16"	C2-3213X 5 15/16"	C2-3214X 5 3/8
3	STUD & NUT ASSEMBLY	C10035 A2-3898	C10035 A2-3898	C10035 A2-3898	C10035 A2-3898	C10035 A2-3898	C10035 A2-3898
4	KEY	C7763	C7763	C7763	C7763	C7763	C7763
5	SLEEVE *	A2-3905	A2-3905	A2-3905	A2-3905	A2-3905	A2-3905
6	GASKET *	D5450	D5450	D5450	D5450	D5450	D5450
7	SHAFT SEAL *	3179	3179	3179	3179	3179	3179
8	HEAD (CAST IRON) HEAD (BRONZE)	D2-1478 D2-1480	D2-1478 D2-1480	D2-1478 D2-1480	D2-1478 D2-1480	D2-1478 D2-1480	D2-1478 D2-1480
9	MOTOR	Contact Dunham-Bush, Inc., Marshalltown, Iowa					
10	SLINGER	C10038	C10038	C10038	C10038	C10038	C10038
11	SHIELD	C8958	C8958	C8958	C8958	C8958	C8958
12	GASKET *	A2-3020	A2-3020	A2-3020	A2-3020	A2-3020	A2-3020

NOTES: 1. NON-STANDARD pump parts are not shown. When ordering repair parts, refer to page 10 of this catalog.
2. * = These parts are required when replacing shaft seal.

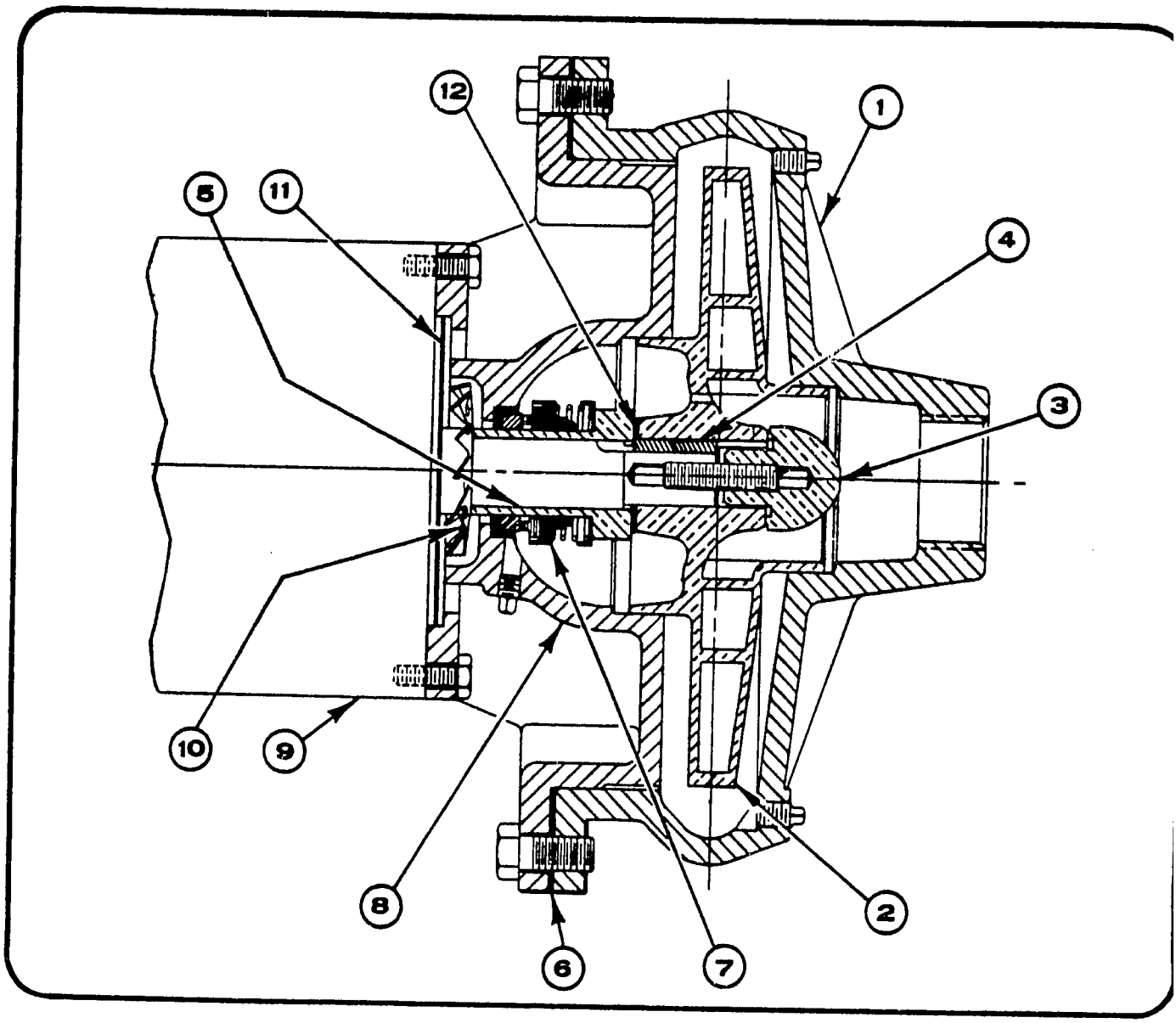

A9 PUMP AND PARTS LIST
SERIES A – 1½ HP

PART NUMBER AND DESCRIPTION	1½ HP 1" 1ϕ & 3ϕ A9C1A	1½ HP 1¼" 1ϕ & 3ϕ A9D1A	1½ HP 2" 1ϕ & 3ϕ A9D1A	1½ HP 2½" 1ϕ & 3ϕ A9D1A
1 CASE (CAST IRON) CASE (BRONZE)	D541 D2-76	F540 D2-74	F544 D2-80	F545 D2-79
2 IMPELLER (BRONZE)	C2-3211X $8^{7}/_{16}$"	C2-3213X $6^{3}/_{8}$"	C2-3214X $5^{29}/_{32}$"	C2-3215X $5^{21}/_{33}$"
3 STUD & NUT ASSEMBLY	C10035 A2-3898	C10035 A2-3898	C10035 A2-3898	C10035 A2-3898
4 KEY	C7763	C7763	C7763	C7763
5 SLEEVE *	A2-3905	A2-3905	A2-3905	A2-3905
6 GASKET *	D5450	D5450	D5450	D5450
7 SHAFT SEAL *	3179	3179	3179	3179
8 HEAD (CAST IRON) HEAD (BRONZE)	D2-1478 D2-1480	D2-1478 D2-1480	D2-1478 D2-1479	D2-1478 D2-1480
9 MOTOR	Contact Dunham-Bush, Inc., Marshalltown, Iowa			
10 SLINGER	C10038	C10038	C10038	C10038
11 SHIELD	C8958	C8958	C8958	C8958
12 GASKET *	A2-3020	A2-3020	A2-3020	A2-3020

NOTES: 1. NON-STANDARD pump parts are not shown. When ordering repair parts, refer to page 10 of this catalog.
2. * = These parts are required when replacing shaft seal.

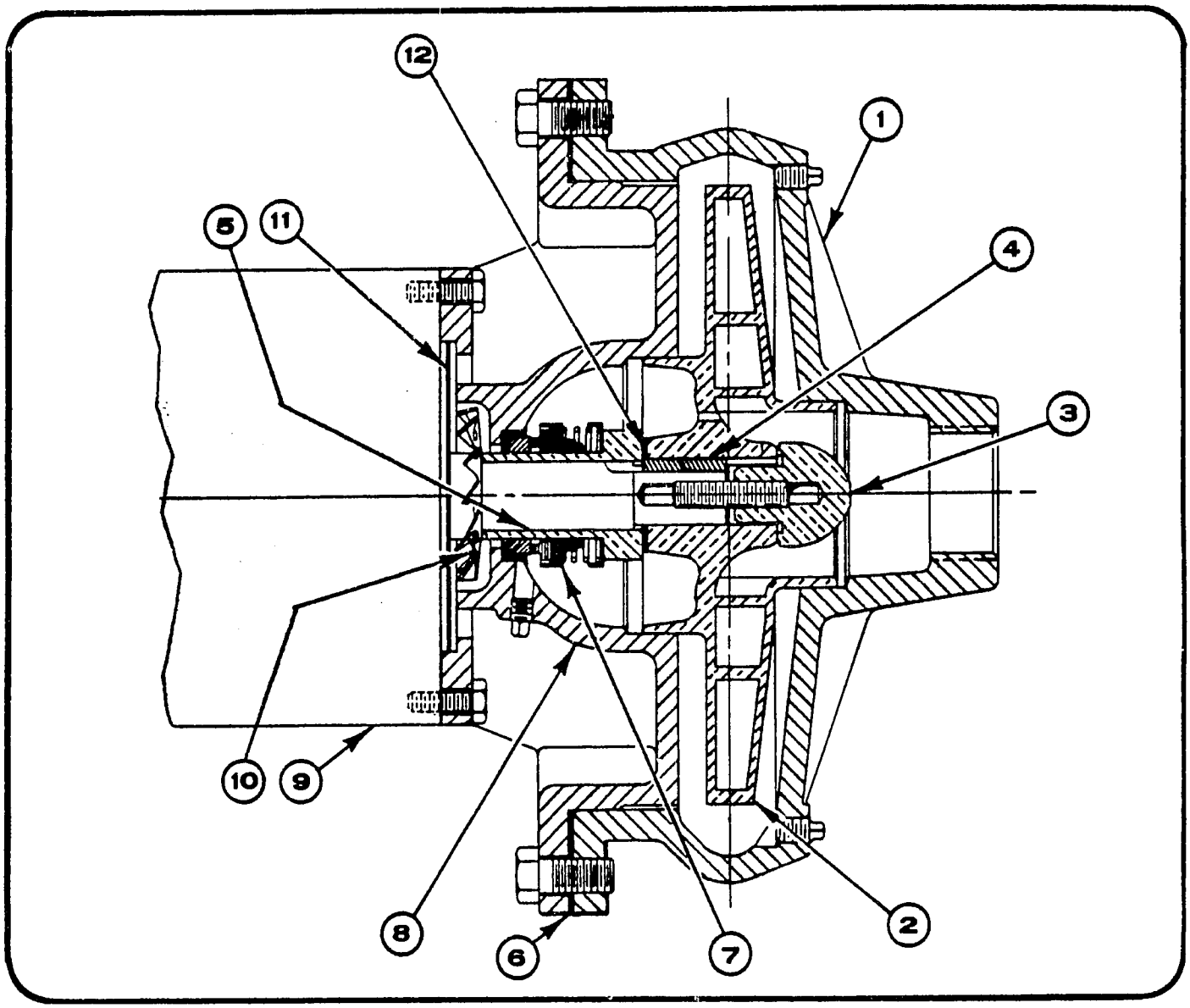

A9 PUMP AND PARTS LIST
SERIES A - 2 HP

PART NUMBER AND DESCRIPTION	2 HP 1" 1ϕ A9C1A	2 HP 1" 3ϕ A9C1A	2 HP 1¼" 1ϕ A9D1A	2 HP 1¼" 3ϕ A9D1A	2 HP 2" 1ϕ D9D1A	2 HP 2" 3ϕ A9D1A	2 HP 2½" 1ϕ A9D1A	2 HP 2½" 3ϕ A9D1A
1 CASE (CAST IRON) CASE (BRONZE)	F541 D2-76	F541 D2-76	F540 D2-74	F540 D2-74	F544 D2-80	F544 D2-80	F545 D2-79	F545 D2-79
2 IMPELLER (BRONZE)	C2-3211X 9"	C2-3211X 9"	C2-3213X 7 3/16"	C2-3213X 7 3/16"	C2-3214X 6 1/2"	C2-3214X 6 1/2"	C2-3215X 6 1/8"	C2-3215X 6 1/8"
3 STUD & NUT ASSEMBLY	C10035 A2-3898	C10035 A2-3898	C10035 A2-3898	C10035 A2-3898	C10035 A2-3898	C10035 A2-3898	C10035 A2-3898	C10035 A2-3898
4 KEY	C7763	C7763	C7763	C7763	C7763	C7763	C7763	C7763
5 SLEEVE *	A2-3905	A2-3905	A2-3905	A2-3905	A2-3905	A2-3905	A2-3905	A2-3905
6 GASKET *	D5450	D5450	D5450	D5450	D5450	D5450	D5450	D5450
7 SHAFT SEAL *	3179	3179	3179	3179	3179	3179	3179	3179
8 HEAD (CAST IRON) HEAD (BRONZE)	D2-1478 D2-1480	D2-1478 D2-1480	D2-1478 D2-1480	D2-1478 D2-1480	D2-1478 D2-1480	D2-1478 D2-1480	D2-1478 D2-1480	D2-1478 D2-1480
9 MOTOR	Contact Dunham-Bush, Inc., Marshalltown, Iowa							
10 SLINGER	C10038	C10038	C10038	C10038	C10038	C10038	C10038	C10038
11 SHIELD	C8958	C8958	C8958	C8958	C8958	C8958	C8958	C8958
12 GASKET *	A2-3020	A2-3020	A2-3020	A2-3020	A2-3020	A2-3020	A2-3020	A2-3020

NOTES: 1. NON-STANDARD pump parts are not shown. When ordering repair parts, refer to page 10 of this catalog.
2. * = These parts are required when replacing shaft seal.

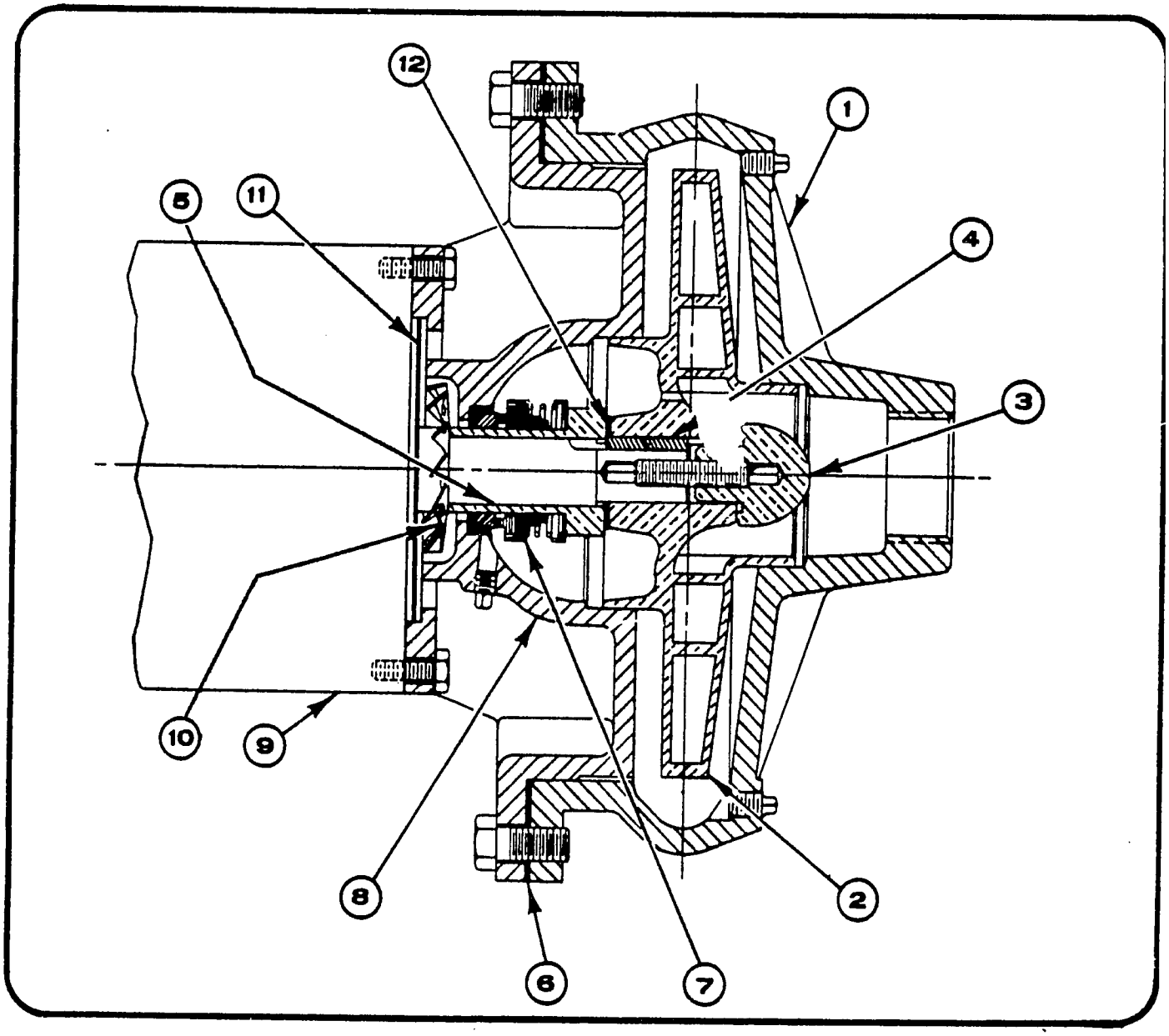

A9 PUMP AND PARTS LIST SERIES A - 3 HP

PART NUMBER AND DESCRIPTION	3 HP 1" 3ϕ A9D2A	3 HP 1" 3ϕ A9C2A	3 HP 1¼" 3ϕ A9D1A	3 HP 1¼" 3ϕ A9D2A	3 HP 2" 3ϕ A9D1A	3 HP 2½" 3ϕ A9D1A
1 CASE (CAST IRON) CASE (BRONZE)	F541 D2-76	F541 D2-76	F540 D2-74	F540 D2-74	F544 D2-80	F545 D2-79
2 IMPELLER (BRONZE)	C2-3212X 5¼"	C2-3211X 6 1/16"	C2-3213X 8¼"	C2-3213X 4 7/16"	C2-3214X 7 1/16"	C2-3215X 6¾"
3 STUD & NUT ASSEMBLY	C10035 A2-3898	C10035 A2-3898	C10035 A2-3898	C10035 A2-3898	C10035 A2-3898	C10035 A2-3898
4 KEY	C7763	C7763	C7763	C7763	C7763	C7763
5 SLEEVE *	A2-3905	A2-3905	A2-3905	A2-3905	A2-3905	A2-3905
6 GASKET *	D5450	D5450	D5450	D5450	D5450	D5450
7 SHAFT SEAL *	3179	3179	3179	3179	3179	3179
8 HEAD (CAST IRON) HEAD (BRONZE)	D2-1478 D2-1480	D2-1478 D2-1480	D2-1478 D2-1480	D2-1478 D2-1480	D2-1478 D2-1480	D2-1478 D2-1480
9 MOTOR	Contact Dunham-Bush, Inc., Marshalltown, Iowa					
10 SLINGER	C10038	C10038	C10038	C10038	C10038	C10038
11 SHIELD	C8958	C8958	C8958	C8958	C8958	C8958
12 GASKET *	A2-3020	A2-3020	A2-3020	A2-3020	A2-3020	A2-3020

NOTES: 1. NON-STANDARD pump parts are not shown. When ordering repair parts, refer to page 10 of this catalog.
2. * = These parts are required when replacing shaft seal.

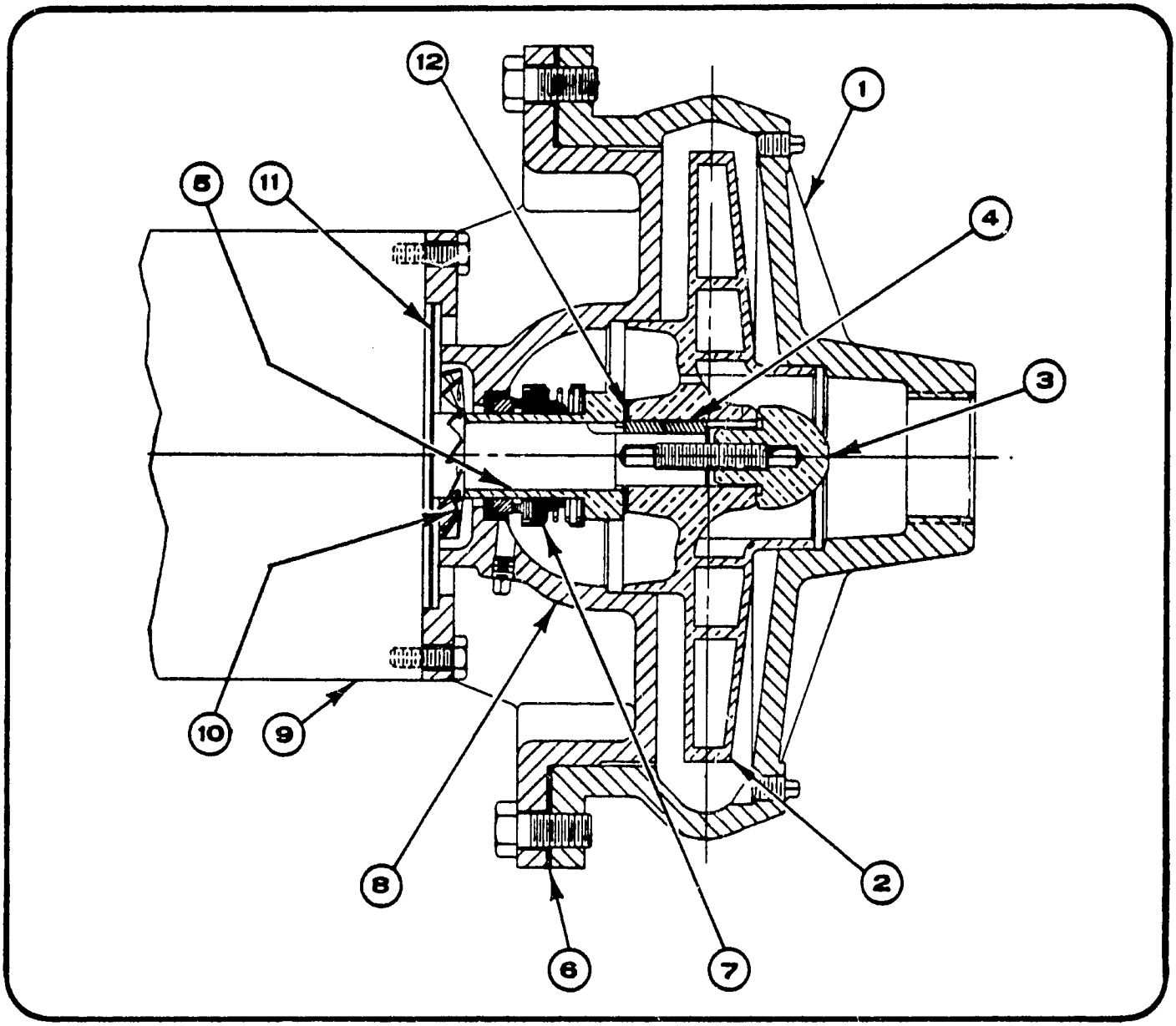

A9 PUMP AND PARTS LIST SERIES A – 5 HP

	PART NUMBER AND DESCRIPTION	5 HP 1" 3φ A9C2A	5 HP 1" 3φ A9D2A	5 HP 1¼" 3φ A9D2A	5 HP 2" 3φ A9D1A	5 HP 2" 3φ A9D2A	5 HP 2½" 3φ A9D1A	5 HP 2½" 3φ A9D2A
1	CASE (CAST IRON) CASE (BRONZE)	F541 D2-76	F541 D2-76	F540 D2-74	F544 D2-80	F544 D2-80	F545 D2-79	F545 D2-79
2	IMPELLER (BRONZE)	C2-3211X $6^{9}/_{16}$"	C2-3212X $5^{7}/_{8}$"	C2-3213X $5^{15}/_{32}$"	C2-3214X $8^{7}/_{16}$"	C2-3214X $4^{15}/_{16}$"	C2-3215X $7^{15}/_{16}$"	C2-3215X $4^{3}/_{4}$"
3	STUD & NUT ASSEMBLY	C10035 A2-3898	C10035 A2-3898	C10035 A2-3898	C10035 A2-3899	C10035 A2-3899	C10035 A2-3899	C10035 A2-3899
4	KEY	C7763	C7763	C7763	C7763	C7763	C7763	C7763
5	SLEEVE *	A2-3905	A2-3905	A2-3905	A2-3905	A2-3905	A2-3905	A2-3905
6	GASKET *	D5450	D5450	D5450	D5450	D5450	D5450	D5450
7	SHAFT SEAL*	3179	3179	3179	3179	3179	3179	3179
8	HEAD (CAST IRON) HEAD (BRONZE)	D2-1478 D2-1480	D2-1478 D2-1480	D2-1478 D2-1480	D2-1478 D2-1480	D2-1478 D2-1480	D2-1478 D2-1480	D2-1478 D2-1480
9	MOTOR	Contact Dunham-Bush, Inc., Marshalltown, Iowa						
10	SLINGER	C10038	C10038	C10038	C10038	C10038	C10038	C10038
11	SHIELD	C8958	C8958	C8958	C8958	C8958	C8958	C8958
12	GASKET *	A2-3020	A2-3020	A2-3020	A2-3020	A2-3020	A2-3020	A2-3020

NOTES: 1. NON-STANDARD pump parts are not shown. When ordering repair parts, refer to page 10 of this catalog.
2. * = These parts are required when replacing shaft seal.

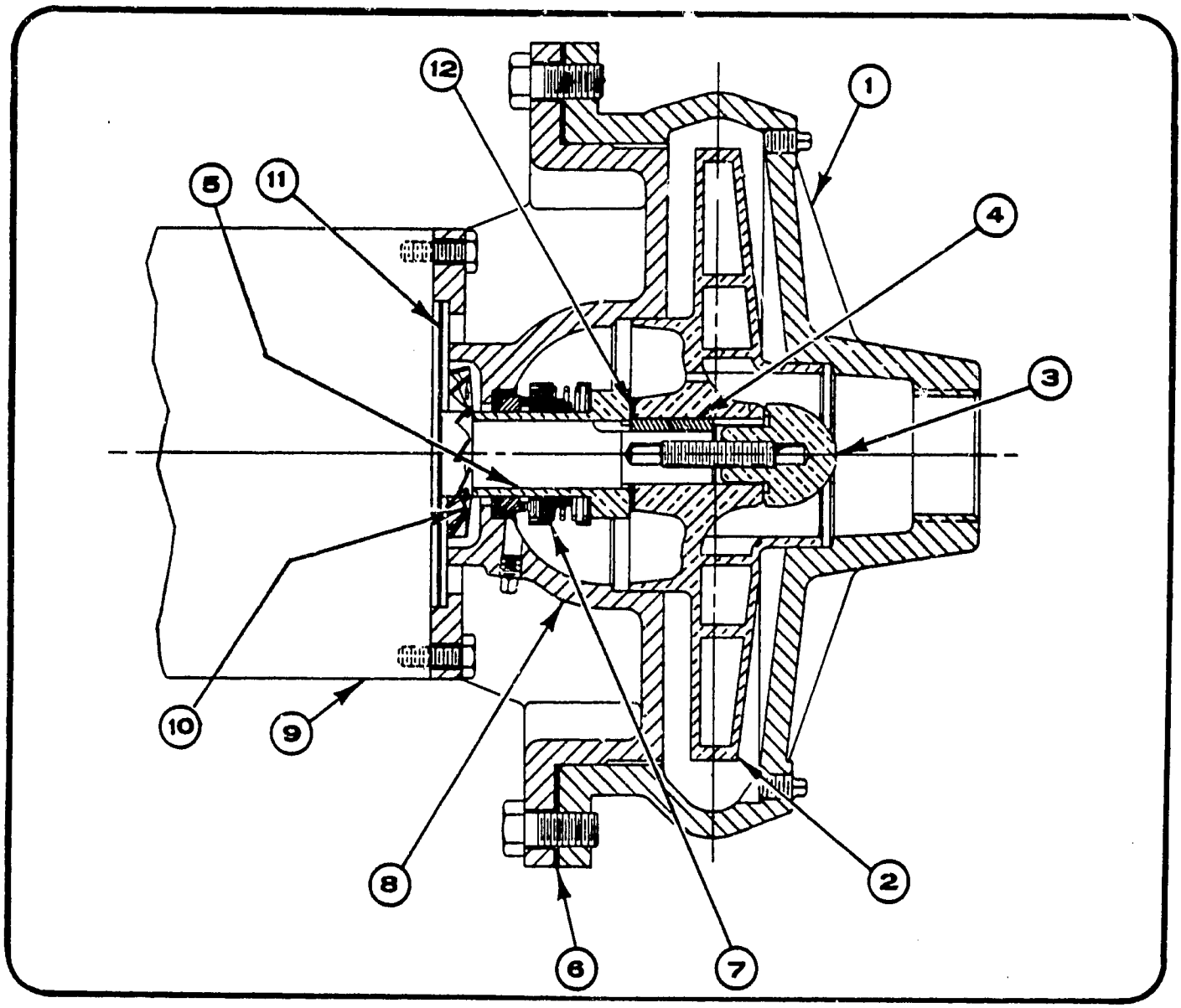

A9 PUMP AND PARTS LIST
SERIES A - 7½ HP

PART NUMBER AND DESCRIPTION	7½ HP 1¼" 3ϕ A9D2A	7½ HP 2" 3ϕ A9D2A	7½ HP 2½" 3ϕ A9D1A	7½ HP 2½" 3ϕ A9D1A
1 CASE (CAST IRON) CASE (BRONZE)	F540 D2-74	F544 D2-80	F545 D2-79	F545 D2-79
2 IMPELLER (BRONZE)	C2-3213X 5 15/16"	C2-3214X 5 9/16"	C2-3215X 9"	C2-3215X 5 5/16"
3 STUD & NUT ASSEMBLY	C10035 A2-3899	C10035 A2-3899	C10035 A2-3899	C10035 A2-3899
4 KEY	C7763	C7763	C7763	C7763
5 SLEEVE *	A2-3905	A2-3905	A2-3905	A2-3905
6 GASKET *	D5450	D5450	D5450	D5450
7 SHAFT SEAL *	3179	3179	3179	3179
8 HEAD (CAST IRON) HEAD (BRONZE)	D2-1478 D2-1480	D2-1478 D2-1480	D2-1481 D2-1483	D2-1478 D2-1480
9 MOTOR	Contact Dunham-Bush, Inc., Marshalltown, Iowa			
10 SLINGER	C1038	C1038	C1038	C1038
11 SHIELD	C8958	C8958	D5478	C8958
12 GASKET *	A2-3020	A2-3020	A2-3020	A2-3020

NOTES: 1. NON-STANDARD pump parts are not shown. When ordering repair parts, refer to page 10 of this catalog.
2. * = These parts are required when replacing shaft seal.

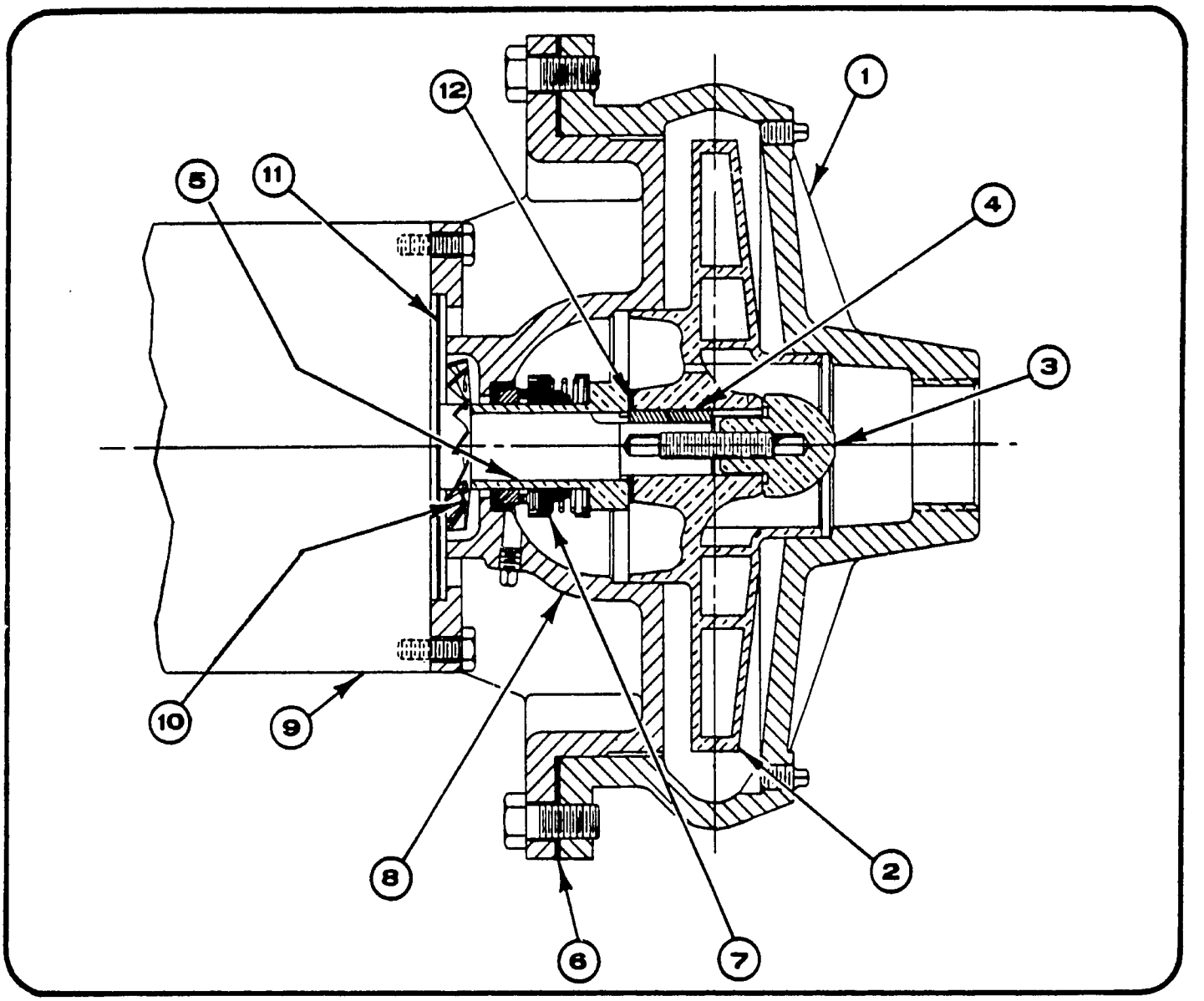

A9 PUMP AND PARTS LIST
SERIES A – 10 HP AND 15 HP

PART NUMBER AND DESCRIPTION	10 HP 1¼" 3ϕ A9D2A	10 HP 2" 3ϕ A9D2A	10 HP 2½" 3ϕ A9D2A	15 HP 2" 3ϕ A9D2A
1 CASE (CAST IRON) CASE (BRONZE)	F540 D2-74	F544 D2-80	F545 D2-79	F544 D2-80
2 IMPELLER (BRONZE)	C2-3213X $6^{3}/_{8}$"	C2-3214X $5^{29}/_{32}$"	C2-3215X $5^{21}/_{32}$"	C2-3214X $6^{5}/_{16}$"
3 STUD & NUT ASSEMBLY	C10035 A2-3899	C10035 A2-3899	C10035 A2-3899	C10035 A2-3899
4 KEY	C7763	C7763	C7763	C7763
5 SLEEVE *	A2-3905	A2-3905	A2-3905	A2-3905
6 GASKET *	D5450	D5450	D5450	D5450
7 SHAFT SEAL *	3179	3179	3179	3179
8 HEAD (CAST IRON) HEAD (BRONZE)	D2-1481 D2-1483	D2-1481 D2-1483	D2-1481 D2-1483	D2-1481 D2-1483
9 MOTOR	Contact Dunham-Bush, Inc., Marshalltown, Iowa			
10 SLINGER	C1038	C1038	C1038	C1038
11 SHIELD	D5478	D5478	D5478	D5478
12 GASKET *	A2-3020	A2-3020	A2-3020	A2-3020

NOTES: 1. NON-STANDARD pump parts are not shown. When ordering repair parts, refer to page 10 of this catalog.
2. * = These parts are required when replacing shaft seal.

241

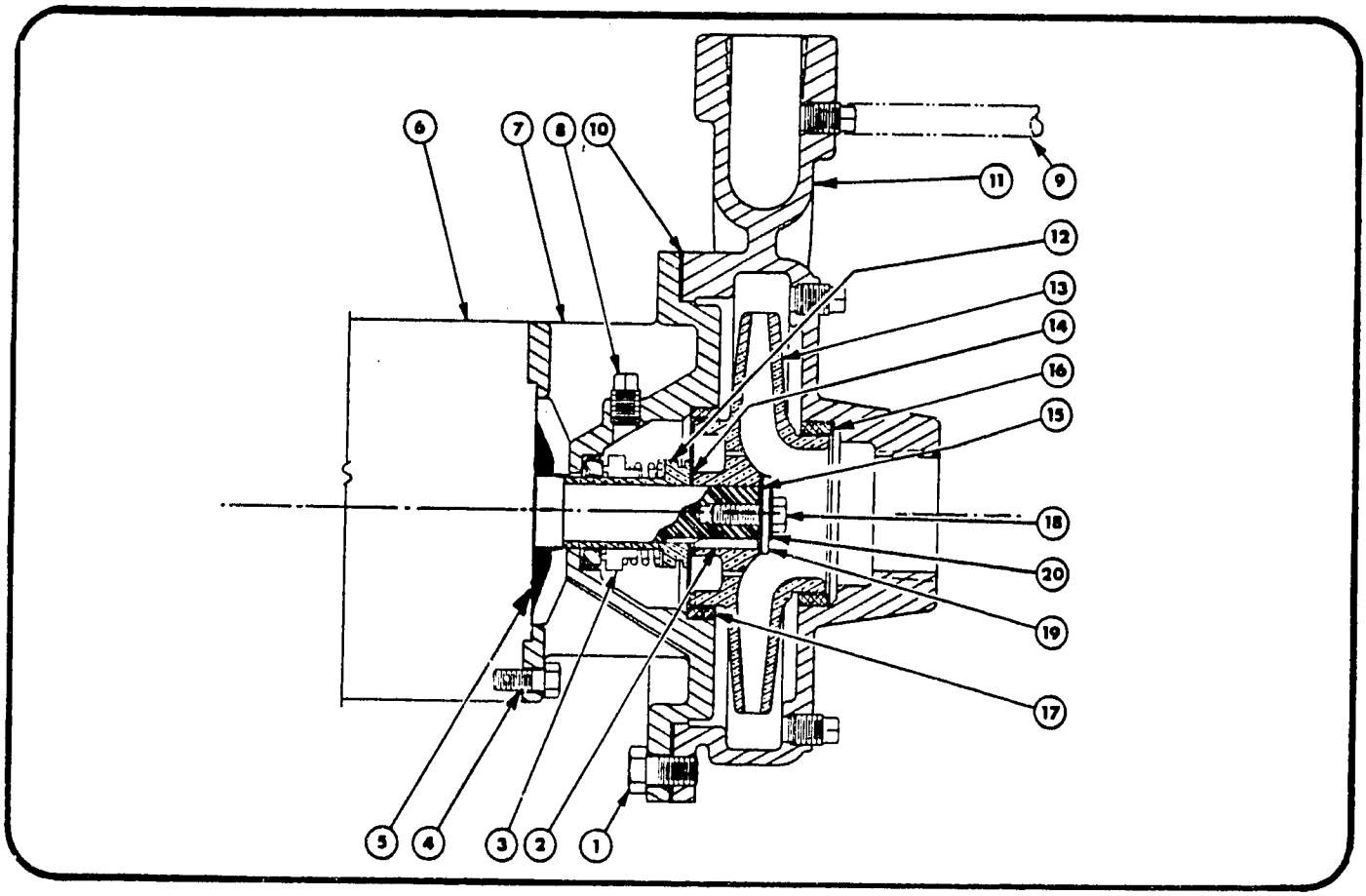

A7 PUMP AND PARTS LIST – ¾", 1¼" AND 1½" DIA. DISCHARGE

PART NUMBER & DESCRIPTION		¾" A7B	1¼" A7B	1¼" A7C	1½" A7B	1½" A7C
1.	Screw – Cap	P - 150				
2.	Key – Impeller	Supplied with Motor				
3.	Seal – Mechanical *	3179	3179	3179	3179	3179
	Seal – 250# Optional	Contact Dunham-Bush, Inc., Marshalltown, Iowa				
4.	Screw – Cap	P-142	P-142	P-150	P-142	P-150
5.	Slinger	Supplied with Motor				
6.	Motor	Contact Dunham-Bush, Inc., Marshalltown, Iowa				
7.	Head, C.I.	C2-2336	C2-2336	C2-2337	C2-2336	C2-2337
	Head, Bronze	C2-2660	C2-2660	C2-2661	C2-2660	C2-2661
	Head, C.I. w/wear Rings	C2-2345	C2-2345	C2-2346	C2-2345	C2-2346
8.	Fitting – Compression Straight	P - 194 (Optional)				
	Fitting – Elbow, Not shown	P - 195 (Optional)				
	Plug – Pipe	(5) P - 196				
9.	Tube	Copper 1/8" OD (Optional)				
10.	Gasket – Case *	C2-2343				
11.	Case, C.I.	C2-2390	C2-2335		C2-2377	
	Case, (Bronze)	C2-2665	C2-2666		C2-2667	
	Case, C.I. w/wear Rings	C2-2389	C2-2347		C2-2376	
	Case, 250# C.I.	Not Available				
	Case, 250# Bronze	Not Available				
	Case, 250# C.I. w/wear Rings	Not Available				
12.	Sleeve *	A2-3018	A2-3018	A2-3018	A2-3018	A2-3018
	Seal – 250# Optional	Contact Dunham-Bush, Inc., Marshalltown, Iowa				
13.	Impeller	C2-2378	C2-2340	C2-2340	C2-2380	C2-2380
14.	Gasket (Impeller – Sleeve) *	A2-3020	A2-3020	A2-3020	A2-3020	A2-3020
15.	Gasket (Impeller – Head) *	A2-3022-1				
16.	Ring – Case Wear Ring	A2-3026	A2-3015		A2-3027	
17.	Ring – Head Wear Ring	A2-3016				
18.	Screw – Impeller	3312	3312	3312	3312	3312
19.	Washer – Impeller	A2-3021-1				
20.	Washer – Sealing	3313	3313	3313	3313	3313

NOTES:
1. NON-STANDARD pump parts are not shown. When ordering repair parts, refer to page 10 of this catalog.
2. * = These parts are required when replacing shaft seal.

242

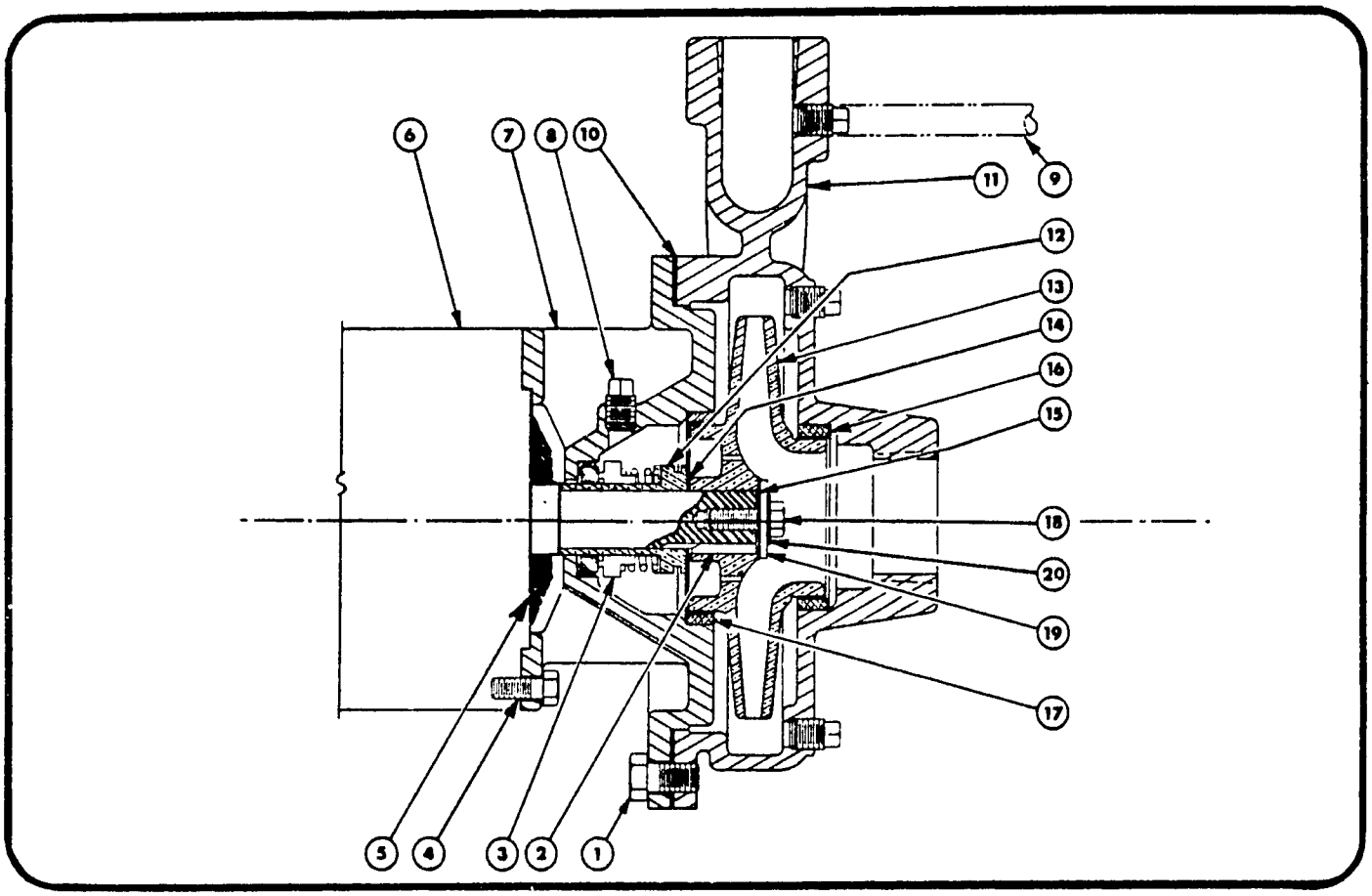

A7 PUMP AND PARTS LIST – 2" AND 2½" DIA. DISCHARGE

PART NUMBER & DESCRIPTION		2" A7D	2" A7E	2" A7F	2½" A7D	2½" A7E	2½" A7E H.C.	2½" A7F
1.	Screw – Cap	P - 150						
2.	Key – Impeller	Supplied with Motor						
3.	Seal – Mechanical *	3179	3179	3291	3179	3179	3179	3291
	Seal – 250# Optional	Contact Dunham-Bush, Inc., Marshalltown, Iowa						
4.	Screw – Cap	P - 142	P - 150	P - 150	P - 142	P - 150	P - 150	P - 150
5.	Slinger	Supplied with Motor						
6.	Motor	Contact Dunham-Bush, Inc., Marshalltown, Iowa						
7.	Head, C.I.	C2-2384	C2-2386	C2-2388	C2-2384	C2-2386	C2-2386	C2-2388
	Head, Bronze	C2-2662	C2-2663	C2-2664	C2-2662	C2-2663	C2-2663	C2-2664
	Head, C.I. w/wear rings	C2-2383	C2-2385	C2-2387	C2-2383	C2-2385	C2-2385	C2-2387
8.	Fitting – Compression Straight	P - 194 (Optional)						
	Fitting – Elbow, Not shown	P - 195 (Optional)						
	Plug – Pipe	(5) P - 196						
9.	Tube	Copper 1/8" OD (Optional)						
10.	Gasket – Case *	C2-2343						
11.	Case, C.I.	D2-1274			D2-1276			
	Case, (Bronze)	D2-1352			D2-1355			
	Case, C.I. w/wear rings	D2-1273			D2-1275			
	Case, 250# C.I.	Not Available						
	Case, 250# Bronze	Not Available						
	Case, 250# C.I. w/wear rings	Not Available						
12.	Sleeve *	A2-3018	A2-3018	A2-3025	A2-3018	A2-3018	A2-3018	A2-3025
	Seal – 250# Optional	Contact Dunham-Bush, Inc., Marshalltown, Iowa						
13.	Impeller	C2-2381	C2-2381	C2-2382	C2-2381	C2-2381	C2-2392	C2-2382
14.	Gasket (Impeller – Sleeve) *	A2-3020	A2-3020	A2-3029	A2-3020	A2-3020	A2-3020	A2-3029
15.	Gasket (Impeller – Head) *	A2-3021-1		A2-3022-2	A2-3022-1			A2-3022-2
16.	Ring – Case Wear Ring	A2-3028						
17.	Ring – Head Wear Ring	A2-3016						
18.	Screw – Impeller	3312	3312	3292	3312	3312	3312	3292
19.	Washer – Impeller	A2-3021-1		A2-3021-2	A2-3021-1			A2-3021-2
20.	Washer – Sealing	3313	3313	3293	3313	3313	3313	3293

NOTES: 1. NON-STANDARD pump parts are not shown. When ordering repair parts, refer to page 10 of this catalog.
2. * = These parts are required when replacing shaft seal.

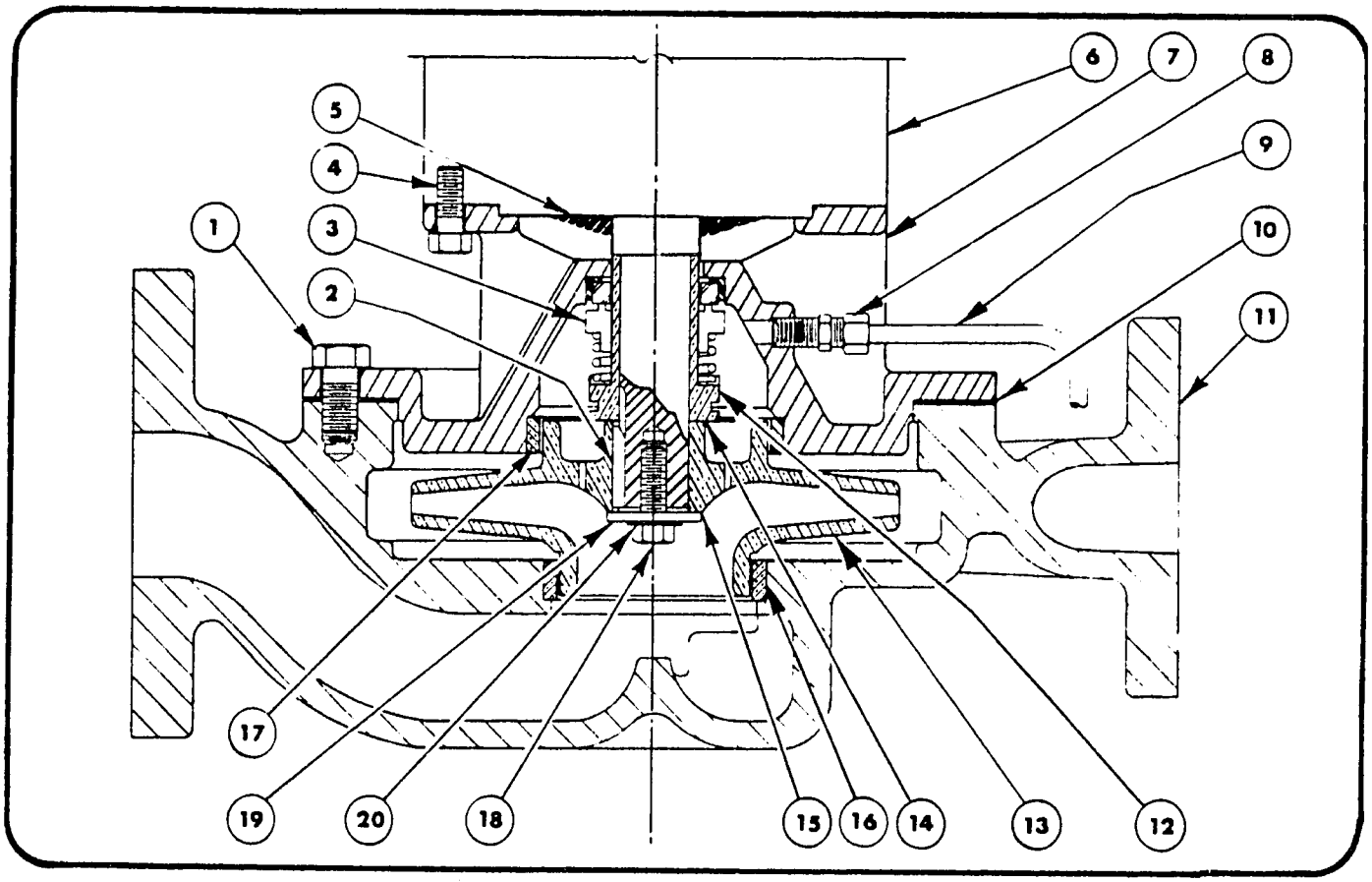

PM7 PUMP AND PARTS LIST – 1", 1¼" AND 1½" DIA. DISCHARGE

PART NUMBER & DESCRIPTION		1" PM7B	1¼" PM7B	1¼" PM7C	1½" PM7B	1½" PM7C
1.	Screw - Cap	P - 150				
2.	Key - Impeller	Supplied with Motor				
3.	Seal - Mechanical *	3179	3179	3179	3179	3179
	Seal 250# Optional	Contact Dunham-Bush, Inc. – Marshalltown, Iowa				
4.	Screw - Cap	P - 142	P - 142	P - 150	P - 142	P - 150
5.	Slinger	Supplied with Motor				
6.	Motor	Contact Dunham-Bush, Inc. – Marshalltown, Iowa				
7.	Head, C.I.	C2-2336	C2-2336	C2-2337	C2-2336	C2-2337
	Head, (Bronze)	C2-2660	C2-2660	C2-2661	C2-2660	C2-2661
	Head, C.I. w/wear rings	C2-2345	C2-2345	C2-2346	C2-2345	C2-2346
8.	Fitting - Compression Straight	P-194				
	Fitting - Elbow – Not shown	P-195				
	Plug - Pipe	(1) P-196				
9.	Tube	Copper 1/8" OD				
10.	Gasket - Case *	C2-2343				
11.	Case, C.I.	D2-1268	D2-1256	D2-1256	D2-1266	D2-1266
	Case, (Bronze)	D2-1346	D2-1348	D2-1348	D2-1350	D2-1350
	Case, C.I. w/wear rings	D2-1267	D2-1255	D2-1255	D2-1265	D2-1265
	Case, 250# C.I.	D2-1299	D2-1301	D2-1301	D2-1303	D2-1303
	Case, 250# Bronze	D2-1347	D2-1349	D2-1349	D2-1351	D2-1351
	Case, 250# C.I. w/wear rings	D2-1300	D2-1302	D2-1302	D2-1304	D2-1304
12.	Sleeve *	A2-3018	A2-3018	A2-3018	A2-3018	A2-3018
	Seal 250# Optional	Contact Dunham-Bush, Inc. – Marshalltown, Iowa				
13.	Impeller	C2-2379	C2-2340	C2-2340	C2-2380	C2-2380
14.	Gasket (Impeller - Sleeve) *	A2-3020	A2-3020	A2-3020	A2-3020	A2-3020
15.	Gasket (Impeller - Head) *	A2-3022-1				
16.	Ring - Case Wear Ring	A2-3026	A2-3015	A2-3015	A2-3027	A2-3027
17.	Ring - Head Wear Ring	A2-3016				
18.	Screw - Impeller	3312				
19.	Washer - Impeller	A2-3021-1				
20.	Washer - Sealing	3313				

NOTES: 1. NON-STANDARD pump parts are not shown. When ordering repair parts, refer to page 10 of this catalog.
2. * = These parts are required when replacing shaft seal.

244

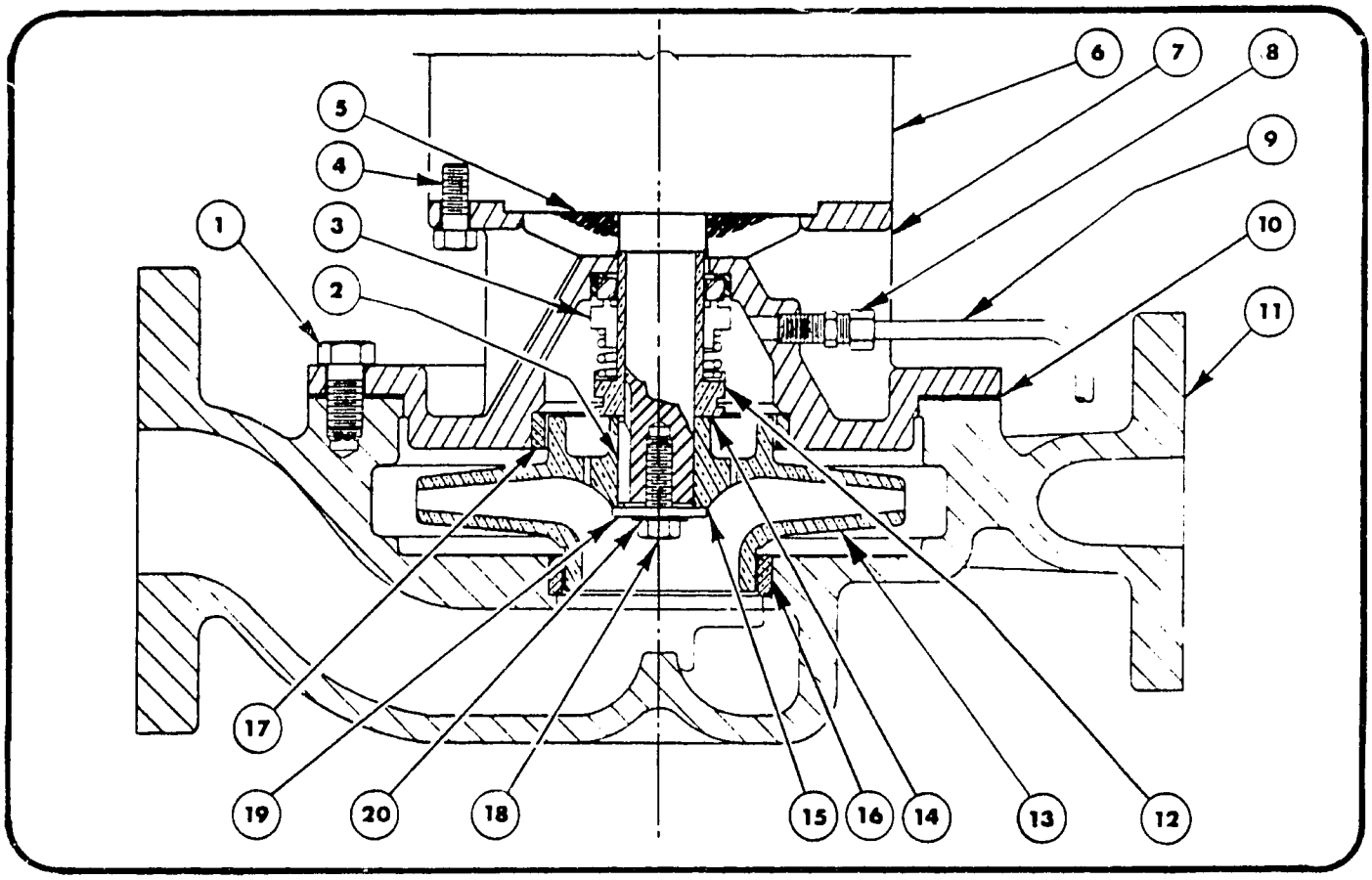

PM7 PUMP AND PARTS LIST – 2" AND 2½" DIA. DISCHARGE

PART NUMBER & DESCRIPTION		2" PM7D	2" PM7E	2" PM7F	2½" PM7D	2½" PM7E	2½" PM7E H.C.	2½" PM7F
1.	Screw - Cap	P - 150						
2.	Key - Impeller	Supplied with Motor						
3.	Seal - Mechanical *	3179	3179	3291	3179	3179	3179	3291
	Seal 250# Optional	Contact Dunham-Bush, Inc. – Marshalltown, Iowa						
4.	Screw - Cap	P - 142	P - 150	P - 150	P - 142	P -150	P - 150	P -150
5.	Slinger	Supplied with Motor						
6.	Motor	Contact Dunham-Bush, Inc. – Marshalltown, Iowa						
7.	Head, C.I.	C2-2384	C2-2386	C2-2388	C2-2384	C2-2386	C2-2386	C2-2388
	Head, (Bronze)	C2-2662	C2-2663	C2-2664	C2-2662	C2-2663	C2-2663	C2-2664
	Head, C.I. w/wear rings	C2-2383	C2-2385	C2-2387	C2-2383	C2-2385	C2-2385	C2-2387
8.	Fitting - Compression Straight	P-194						
	Fitting - Elbow – Not Shown	P-195						
	Plug - Pipe	(1) P-196						
9.	Tube	Copper 1/8" OD						
10.	Gasket - Case *	C2-2343						
11.	Case, C.I.	D2-1270			D2-1272			
	Case, (Bronze)	D2-1269			D2-1356			
	Case, C.I. w/wear rings	D2-1353			D2-1271			
	Case, 250# C.I.	D2-1305			D2-1307			
	Case, 250# Bronze	D2-1354			D2-1357			
	Case, 250# C.I. w/wear rings	D2-1306			D2-1308			
12.	Sleeve *	A2-3018	A2-3018	A2-3025	A2-3018	A2-3018	A2-3018	A2-3025
	Seal 250# Optional	Contact Dunham-Bush, Inc. – Marshalltown, Iowa						
13.	Impeller	C2-2381	C2-2381	C2-2382	C2-2381	C2-2381	C2-2392	C2-2382
14.	Gasket (Impeller - Sleeve) *	A2-3020	A2-3020	A2-3029	A2-3020	A2-3020	A2-3020	A2-3029
15.	Gasket (Impeller - Head)	A2-3022-1		A2-3022-2	A2-3022-1			A2-3022-2
16.	Ring - Case Wear Ring	A2-3028						
17.	Ring - Head Wear Ring	A2-3016						
18.	Screw - Impeller	3312		3292	3312			3292
19.	Washer - Impeller	A2-3021-1		A2-3021-2	A2-3021-1			A2-3021-2
20.	Washer - Sealing	3313		3293	3313			3293

NOTES: 1. NON-STANDARD pump parts are not shown. When ordering repair parts, refer to page 10 of this catalog.

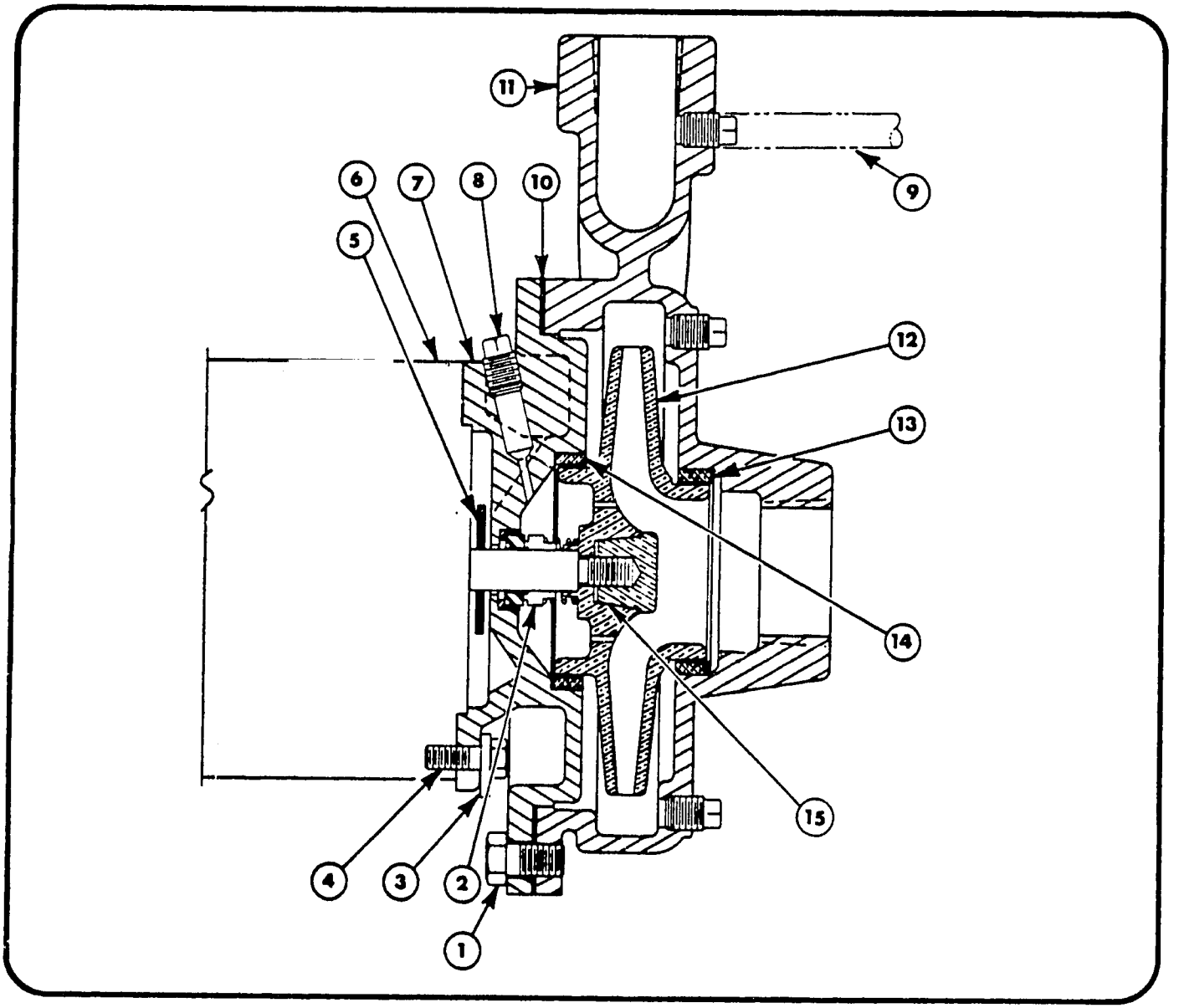

A7A PUMP AND PARTS LIST– ¾", 1¼" AND 1½" DIA. DISCHARGE

	PART NUMBER & DESCRIPTION	¾" A7A	1¼" A7A	1½" A7A
1.	Screw–Cap	P - 150	P - 150	P - 150
2.	Seal–Mechanical *	472	472	472
3.	Retainer–Head	A2-3023	A2-3023	A2-3023
4.	Screw–Cap	P - 142	P - 142	P - 142
5.	Slinger	C8854	C8854	C8854
6.	Motor	Contact Dunham-Bush, Inc. Marshalltown, Iowa		
7.	Head, C.I.	C2-2342	C2-2342	C2-2342
	Head, Bronze	C2-2659	C2-2659	C2-2659
	Head, C.I. w/wear rings	C2-2344	C2-2344	C2-2344
8.	Fitting – Compression Straight	P - 194 (Optional)		
	Fitting – Elbow (Not Shown)	P - 195 (Optional)		
	Plug–Pipe	(5) P - 196		
9.	Tube	Copper 1/8" OD (Optional)		
10.	Gasket–Case *	C2-2343	C2-2343	C2-2343
11.	Case, C.I.	C2-2390	C2-2335	C2-2377
	Case, Bronze	C2-2665	C2-2666	C2-2667
	Case, C.I. w/wear rings	C2-2389	C2-2347	C2-2376
12.	Impeller	C2-2378	C2-2339	C2-2498
13.	Ring – Case Wear Ring	A2-3026	A2-3015	A2-3027
14.	Ring – Head Wear Ring	A2-3016	A2-3016	A2-3016
15.	Screw–Impeller	A2-3691	A2-3691	A2-3691

NOTES:
1. NON-STANDARD pump parts are not shown. When ordering repair parts, refer to page 10 of this catalog.
2. * = These parts are required when replacing shaft seal.

246

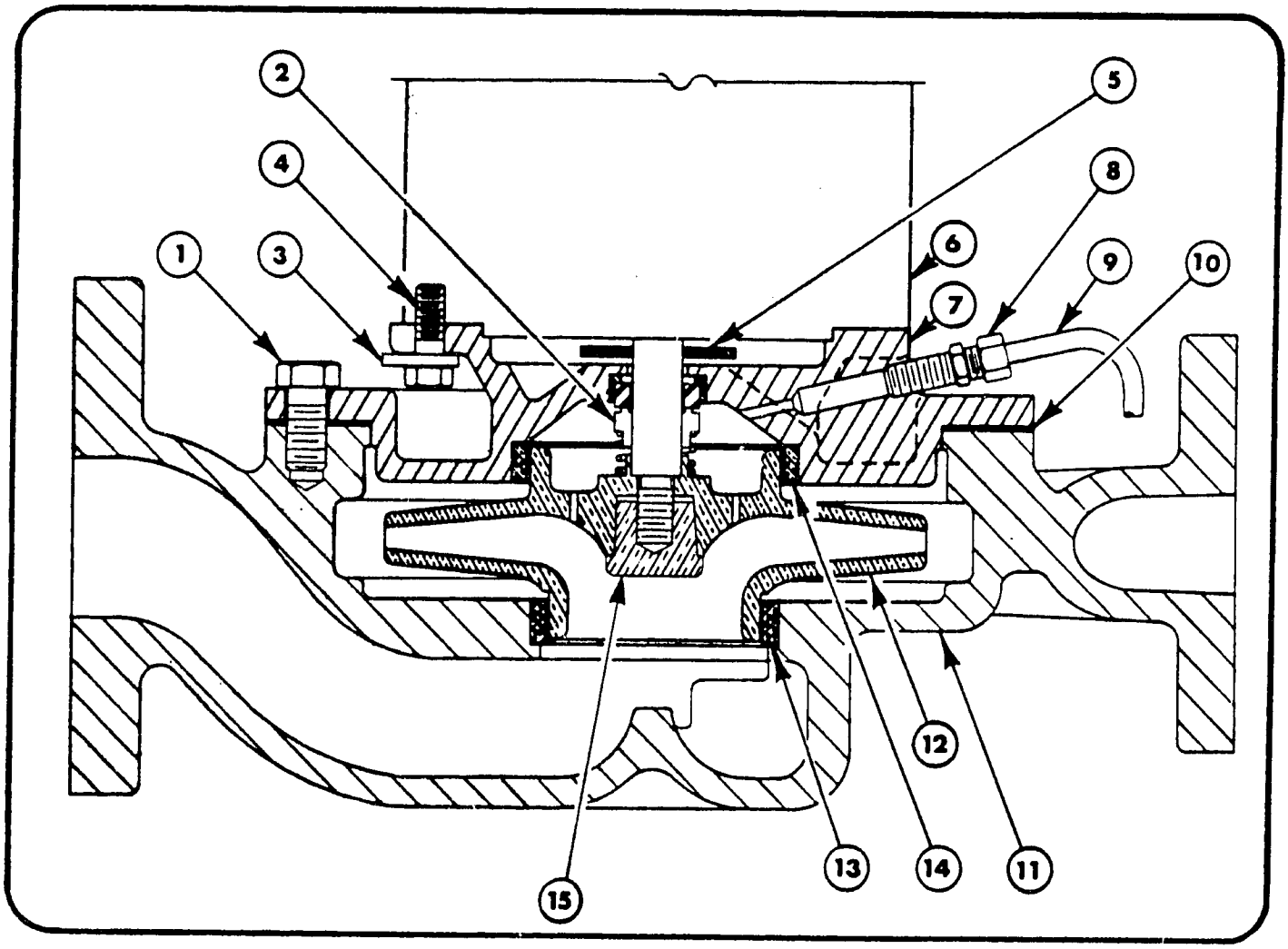

PM7A PUMP AND PARTS LIST
1", 1¼" AND 1½" DIA. DISCHARGE

PART NUMBER & DESCRIPTION		1" PM7A	1¼" PM7A	1½" PM7A
1.	Screw—Cap	P - 150	P - 150	P - 150
2.	Seal—Mechanical *	472	472	472
3.	Retainer—Head	A2-3023	A2-3023	A2-3023
4.	Screw—Cap	P - 142	P - 142	P - 142
5.	Slinger	C8854	C8854	C8854
6.	Motor	Contact Dunham-Bush, Inc., Marshalltown, Iowa		
7.	Head, C.I.	C2-2342	C2-2342	C2-2342
	Head, Bronze	C2-2659	C2-2659	C2-2659
	Head, C.I. w/wear rings	C2-2344	C2-2344	C2-2344
8.	Fitting—Compression Straight	P - 194		
	Fitting—Elbow (Not Shown)	P - 195		
	Plug—Pipe	(1) P - 196		
9.	Tube	Copper 1/8" OD		
10.	Gasket—Case *	C2-2343	C2-2343	C2-2343
11.	Case, C.I.	D2-1268	D2-1256	D2-1266
	Case, Bronze	D2-1346	D2-1348	D2-1350
	Case, C.I. w/wear rings	D2-1267	D2-1255	D2-1265
	Case, 250# C.I.	D2-1299	D2-1301	D2-1303
	Case, 250# Bronze	D2-1347	D2-1349	D2-1351
	Case, 250# C.I. w/wear rings	D2-1300	D2-1302	D2-1304
12.	Impeller	C2-2378	C2-2339	C2-2498
13.	Ring—Case Wear Ring	A2-3026	A2-3015	A2-3027
14.	Ring—Head Wear Ring	A2-3016	A2-3016	A2-3016
15.	Nut—Impeller	A2-3691	A2-3691	A2-3691

NOTES:
1. NON-STANDARD pump parts are not shown. When ordering repair parts, refer to page 10 of this catalog.
2. * = These parts are required when replacing shaft seal.

247

DUNHAM-BUSH

AIR CONDITIONING, REFRIGERATION, HEATING PRODUCTS AND ACCESSORIES

MAIN OFFICES

175 SOUTH STREET WEST HARTFORD, CONNECTICUT 06110

FACTORIES

WEST HARTFORD DIVISION
179 South Street
West Hartford, Connecticut
06110

HARRISONBURG DIVISION
101 Burgess Road
Harrisonburg, Virginia
22801

MARSHALLTOWN DIVISION
811 East Main Street
Marshalltown, Iowa
50158

RIVERSIDE DIVISION
1850 Massachusetts Ave.
Riverside, California
92507

SUBSIDIARIES

DUNHAM-BUSH of Canada Limited
140 Wendell Avenue
Weston, Ontario

DUNHAM-BUSH, LTD.
Fitzherbert Road, Farlington
Portsmouth, Hampshire, England

DUNHAM-BUSH INTERNATIONAL: 175 South Street, West Hartford, Connecticut 06110, U.S.A.
CABLE: DUNBUSH or TELEX: 994469

SALES OFFICES

ALABAMA
Birmingham
Mobile

ARIZONA
Phoenix

ARKANSAS
Little Rock

CALIFORNIA
Arcadia
Los Angeles
Sacramento
San Diego
San Francisco

COLORADO
Denver

CONNECTICUT
Hartford
Bloomfield

FLORIDA
Clearwater
Jacksonville
Miami
Orlando

GEORGIA
Atlanta

HAWAII
Honolulu

ILLINOIS
Chicago
Peoria
Rockford

INDIANA
Indianapolis
Michigan City

IOWA
Des Moines

KANSAS
Lenexa

KENTUCKY
Louisville

LOUISIANA
New Orleans
Shreveport

MAINE
Lewiston

MARYLAND
Baltimore
Silver Spring

MASSACHUSETTS
Boston
Springfield

MICHIGAN
Detroit
Grand Rapids
Kalamazoo

MINNESOTA
Minneapolis

MISSISSIPPI
Jackson

MISSOURI
Kansas City
St. Louis

MONTANA
Billings
Great Falls

NEBRASKA
Omaha

NEW JERSEY
Hazlet
Little Falls
Union

NEW MEXICO
Albuquerque

NEW YORK
Albany
Buffalo
New York City
Rochester
Syracuse

NORTH CAROLINA
Charlotte
Greensboro

OHIO
Akron
Cincinnati
Cleveland
Columbus
Dayton
Delaware
Toledo

OKLAHOMA
Oklahoma City
Tulsa

OREGON
Portland

PENNSYLVANIA
Harrisburg
Philadelphia
Pittsburgh
Pittston

PUERTO RICO
Caparra Heights

RHODE ISLAND
Providence

TENNESSEE
Memphis
Knoxville
Nashville

TEXAS
Dallas
El Paso
Houston
Lubbock
San Antonio

UTAH
Salt Lake City

VIRGINIA
Alexandria
Harrisonburg
Richmond
Virginia Beach

WASHINGTON
Seattle
Spokane

WEST VIRGINIA
Barboursville

WISCONSIN
Milwaukee

DUNHAM-BUSH, INC. • Marshalltown, Iowa 50158, U.S.A.

3440B-5M-477B-1079B

one of The Signal Companies

CONTRACT NO. AID/OTR-C-1629
PIO/T NO. 263-026-3-90315
WBEC PROJECT NO. 4631
PROCUREMENT AND TECHNICAL REVIEW
FOR USAID CAIRO, EGYPT

This report section pertains to the following project:

Importer:	Co-Operative Association for Chicken Farmers (Cold Storage)
Order No:	EA 10062
L/C Bank:	Bank of America
L/C Amount:	$80,300.00
DIB L/C No.:	620915
SER/COM:	#3

EQUIPMENT IDENTIFICATION

The equipment and spare parts lists from the suppliers final invoice and the equipment list from the contractor's on-site inspection are itemized in tabular form.

Consistency of the two parts lists may be easily established. This form also indicates compliance with the proforma invoice, contract and bank appraisal report.

Equipment details, such as catalog and serial numbers are shown on the contractor's on-site Equipment Identification form following the Equipment and Spare Parts Lists.

250

EQUIPMENT LIST

CONTRACTOR ON-SITE INSPECTION	DUNHAM-BUSH INVOICE #EA 10062 Dated 1-25-79	DOCUMENTATION VERIFICATION		
		PROFORMA INVOICE	CONTRACT LOCAL	D.I.B. APPR. REPORT
		Proforma dated 9-8-77	dated 11-1-78	
(4) Air Cooled Condenser Units w/compressors Models SC101PELF5 & SCD11PC5	(?) Air Cooled Condenser Units	(2) Water Cooled Cond. Units, Model WH101PELF5	Equipment needed for 400 tons produce storage and 40 tons freezing storage and 1000 kgs. meat freezer storage.	Same equipment as listed on both Proformas dated 9-8-77
(4) 4-Fan Product Coolers Model D Unit #OUC-720	(?) Unit Coolers	(3) Water Cooled Cond. Units, Model WH111PHFS		
	(?) Heat Exchanger Cooling Tower Pumps	(2) Unit Coolers, Model ECE480		
		(2) Unit Coolers, Model UC 720		
		(2) Cooling Tower Pumps, Model A 9		
		Second Proforma dated 9-8-77		
		(2) Air Cooled Condenser, Model C010 SCFS with Evaporator (Unit Cooler) Model UC720		

SPARE PARTS LIST

CONTRACTOR ON-SITE INSPECTION	DUNHAM-BUSH INVOICE # EA10062	COMMENTS
No spare parts on-site	References Spare parts on Proforma	No spare parts are referenced in Contract. Spare Parts listed in Proforma dated 9-8-77 are: 8 GA 1774 Comp. Mtg. Spacer 2 CNT 22 Dual press. CNT. 2 CNT 106 OIL FAIL. CNT. 4 650B395 BRACKET, CONTROL 2 GA 467 GASKET, R- OUT VALVE 2 PLU 135 FUSABLE PLUG 1 BODY COOLING FAN 2 CRANKCASE HEATER 2 VAL 685T2 RELIEF VALVE 2 RECEIVER HEATER 2 CNT 229 REC. HEATER THERMOSTAT 2 VAL 389 CHECK VALVE-HTD. RCVR. 1 SPARE COMPRESSOR MOTOR SET WITH STARTER MODEL NO. 101 PELF5 1 SPARE COMPRESSOR MOTOR SET WITH STARTER MODEL 111 PHF5

22

SER/COM #3

DATE 2-2-81

IMPORTER: Coop. Assn. for Chicken Farmers

DIB L/C# 20040

LOCATION: Cairo

U.S. L/C 620915

SERVICE: Cold Storage Plant

AMOUNT USD $80,300.00

EQUIPMENT IDENTIFICATION

	TYPE	MODEL	SERIAL
#1	Remote Condensing Unit w/Compressor	No name plate *	
#2	Remote Condensing Unit w/Compressor	SC101PELF5	781010168
#3	Remote Condensing Unit w/Compressor	SC101PELF5	781010169
#4	Remote Condensing Unit w/Compressor	SCD11PC5	781010162

STATUS: Operational

REMARKS: * All four units are physically identical.

DATE _____

IMPORTER: _____ DIB L/C# _____

LOCATION: _____ U.S. L/C _____

SERVICE: _____ AMOUNT _____

EQUIPMENT IDENTIFICATION

#1	TYPE Product Cooler (4 Fan)	MODEL "D"	SERIAL OCU-720
#2	Product Cooler (4Fan)	No name plate *	
#3	Product Cooler (4 Fan)	No name plate *	
#4	Product Cooler (4 Fan)	No name plate *	

STATUS: Operational

REMARKS: * All four units are physically identical.

EQUIPMENT VALUE

Equipment value will be considered in two parts. PART #1 will determine if the net sale value of the equipment as indicated by Mr. Matava and Mr. Stillson of Dunham-Bush appear to reflect reasonable pricing. Pricing consistency with competitive pricing quotations will also be considered. PART #2 will determine if the net sale price established in PART #1 is consistent with the final invoice. As stated by AID funding regulations the final invoice amount must reflect reasonable pricing.

PART #1

Competitive quotations were not obtainable on this specific project from the Egyptian Bank, D.I.B. Therefore, the contractor does not have specific competitive pricing information available on this project for evaluation. It is strongly recommended that competitive bids be obtained prior to issuing a letter of credit and kept on file by the lending institution.

As stated in the equipment identification section, four air cooled condensing units with four unit coolers were installed on this project. The sales value for this equipment is stated in three documents:

Dunham-Bush Production Order	Order No. EA10062	$21,766.00
Coolair Letter to Dunham-Bush International	Dated 11-2-78	$21,767.00
Interview report from Mr. Matava and Mr. Stillson of Dunham-Bush		$21,766.00

With the consistency of the above documentation and the previous project experience of the contractor the conclusion has been made that $21,766.00 does appear to reflect a reasonable market value for the equipment F.O.B. factory.

PART #2

Consistency between the Invoice Amount and the "NET SALE VALUE" was established as follows:

Dunham-Bush Invoice No. EA 10062	$80,300.00
Less "NET SALE VALUE" of equipment	($21,766.00)
	$58,534.00

Therefore, $58,534.00 was retained for packaging, freight, insurance and additional profit. This dollar amount represents a mark-up of 269% of the "NET SALES VALUE". A mark-up of this magnitude appears to be a violation of the "Price Provisions" regulation for the use of AID funds. The regulation states, "No funds made available under this Act shall be used for the purchase in bulk of any commodities at prices higher than the market price prevailing in the United States at the time of purchase, adjusted for differences in the cost of transportation to destination, quality, and terms of payment".

Two invoices for insulation, solder and freon from Sillcox Air Conditioning indicate purchases were made by Cool Air Corporation and C.A.C. in the name of this importer (Chicken Farm Co-Operative). The invoices are:

Sillcox Invoice No. 9251-0	(4-2-79)	$27,011.69
Sillcox Invoice No. 991800-S	(8-23-79)	$23,428.42
Total		$50,440.11

However, these invoices are not included in the "NET SALE VALUE" of equipment because:

1) These items do not appear on the proforma invoice for this project.
2) These items were not included in the bank's appraisal of this project.
3) No evidence of large quantities of freon, insulation, or solder was found during the contractor's on-site inspection.
4) The importer stated these items were not delivered.
5) The contractor could not justify the need for the large quantities of freon, insulation and solder indicated by the above referenced invoices.

If these items were purchased for this project the necessity for these items and the quantity of these accessories should be explained by C.A.C. Corporation.

Spare parts are also excluded from the "NET SALE VALUE". The parts listed on the proforma invoice and referenced in the final invoice EA 10062 were not delivered to the job site, according to the importer. Also no evidence of spare parts was found at the job site location by the contractor. When these parts are delivered to the importer the reasonable charge for these parts would, of course, be a legitimate additional charge against the letter of credit.

EQUIPMENT CAPABILITY

The expected equipment performance capability is stated by two project documents: the Bank's Appraisal Report (D.I.B.) and by the project contract.

D.I.B. APPRAISAL REPORT - The Development Industrial Bank's appraisal was based on 310 tons total produce storage. The total was to be divided into the following three types of storage: 1) 270 tons of vegetable storage, 2) 30 tons frozen meat storage and 3) 10 tons of low temp "quick freeze" meat storage.

PROJECT CONTRACT - The contract for this project is dated Wednesday, November 1, 1978. According to the contract, Dunham-Bush equipment is needed for cooling storage constructed by the Chicken Farmers Association for storing potatoes, vegetables, fruits and milk products; totaling 400 tons wih temperatures between 2°C. and 8°C. Also a freezing storage of 40 tons capacity at a temperature of -20°C. in addition to a freezing ward with a capacity of 1,000 kgs. fresh meat/daily.

The overall variation in the expected storage capacity is 130 tons or 40%. Therefore, information obtained during the interview and on-site inspection provides the best source to establish expected performance criteria. The importer stated that two large areas were used for produce storage and a temperature of 2°C. to 4°C. could be maintained. Two small areas are used for freezing storage and quick freeze with respective temperatures of -20°C. and -30°C which the importer felt was adequate. These temperatures are consistant with the contract. Based on this information the contractor concludes that the equipment capability is satisfactory for this installation and the expected performance criteria is being met without the need for purchase of additional major equipment.

SERVICE AND MAINTENANCE

As stated in the introduction both parts and labor are necessary for equipment operation and future maintenance.

PARTS - Parts will be considered by two classifications. Major system components and maintenance or operational parts and supplies.

**System components necessary for equipment overhaul or repair were listed by Dunham-Bush on the proforma invoice dated 9-8-77 and referenced in the final customer invoice. Specifically two spare compressor motor sets with starters are listed. Other items are listed in the equipment identification section of this report. As indicated the list does not agree with the on-site inspection. No evidence of any spare part delivery was found at the job site. The importer states that his efforts to obtain these parts have been unsuccessful. Identification numbers given to each part are developed by the manufacturer. Since there is not a universal parts numbering system Dunham-Bush must be relied upon to provide parts identification information. Parts lists with the associated identification numbers are included at the end of this report section. The packaged refrigeration (Air Cooled Condensers) parts list is Exhibit C-1, Compressor replacement parts is Exhibit C-2 and the Unit Cooler parts list is Exhibit C-3.

**Maintenance parts and supplies consist of parts that are used in the normal operation of equipment. Obviously the quantity and type of parts to keep at the job site depends on the availability of parts from a local source. A list of maintenance parts was developed in the proforma invoice dated 9-8-77. None of these spare

259

parts or the two compressor sets referenced above have arrived at the job site. If additional spare parts are desired price lists are included for the compressor parts (Exhibit C-4).

LABOR - Labor may also be considered by the same two classifications as parts, major system component labor and maintenance labor.

**Service work for major overhauls or replacement of major system components was not found to be available locally. According to the regional sales office for Dunham-Bush, in Athens, start-up and major system repair labor would be supplied from the United States.

**Maintenance or operational labor must be supplied locally. The operating engineer will keep operating data and check equipment on a regular basis. Maintenance labor such as controls repair or replacement will be more difficult since the importer has expressed a reluctance to enter into any further contracts with the local Dunham-Bush agent. The contractor would recommend that maintenance labor be performed by an agency or individual familiar with Dunham-Bush equipment, such as Mr. Salah Botros used by Badi El Hanafy in Aiat. The initial step toward operation and maintenance is obtaining and following O & M manuals. The appropriate Product Cooler operating and maintenance manual (Exhibit C-5) is included at the conclusion of this report section.

(Chicken Farms
SER/COM #3 Cold Storage)
DUNHAM-BUSH LITERATURE
EXHIBIT INDEX

EQUIPMENT	REPLACEMENT PARTS LIST	PARTS PRICES	OPERATIONAL & MAINTENANCE MANUALS	RECOMMENDED SPARE PARTS LIST		
SC101PELF5 Air Cooled Condenser	C-1 C-2	C-4				
SCD11PC5 Air Cooled Condenser	C-1 C-2	C-4				
Model D OUC-720 Product Coolers	C-3		C-5			

Exhibit C-1

DUNHAM-BUSH

REPAIR PARTS

SMALL COWL, COWL & ACE SYSTEMS PACKAGED REFRIGERATION

TERMS OF SHIPMENT: F.O.B. SHIPPING POINT

ALL PRICES SUBJECT TO CHANGE WITHOUT NOTICE

PARTS WILL BE INVOICED AT PRICES IN EFFECT AT THE TIME OF SHIPMENT

ORDERING INSTRUCTIONS

1. Complete part number and its description is required when ordering.
2. When a part number is not known or shown in the parts catalog, complete model and serial number of the unit on which the part is to be used should be given.
3. Send all orders to: Dunham-Bush, Inc., Parts Department Harrisonburg, Virginia
   Unless Otherwise Designated
4. All prices are for one each part or kit as applicable.
5. Federal, state, local or other taxes are not included in the prices.
6. All prices are subject to change without notice and parts will be invoiced at prices in effect at the time of shipment.
7. We reserve the right to ship substitute parts or alternate parts when interchangeable with the part ordered. The invoice will cover the price of the actual part shipped.
8. All orders requiring SPECIAL HANDLING for delivery to either the local bus station or the airport, will have a $25 additional charge invoiced or actual cost whichever is higher.
9. Minimum billing is $25.00 Net.
10. Refer to latest revision of Form 1278 for terms of sale.
11. Refer to latest revision of Form 6692 for pricing.

262

ENCLOSURE PARTS - ALL MODELS		MODEL NUMBER							
PART #	DESCRIPTION	SC005	SC008 SC009	SC010 SC011	SC015 SC020	SC030 SC032 SC050 SC052	CO10SC CO10SCF CO10SLF SC075 SC100 SC104 SC154	CO17SC CO15SC CO15TLF CO15SCF CO15SLF CO20SCF CO20SC CO20SLF CO20TLF	CO25SCF SC25SLF CO25TLF CO30SC CO30SCF CO30SLF CO25SC
BAS115	Base, Unit	1	1	1	1				
BAS117	Base, Unit					1			
BAS119	Base, Unit						1		
BAS196AT10	Base, Unit							3	4
BAS200	Base, Cond.							3	4
SUP517T1	Support, Enclosure	1	1	1	1				
SUP517T2	Support, Enclosure					1			
SUP517T3	Support, Enclosure						1		
SUP518WT1	Support, Enclosure							1	
SUP518WT2	Support, Enclosure								1
SUP516WT1	Support, Panel							1	2
LEG77	Leg	2	2	2	2	2	2		
BAF128	Baffle	1	1	1	1				
BAF126	Baffle					1			
BAF282	Baffle						1		
PAD37	Pad, Unisorb							8	12
CMT2	Pad, Cement Unisorb							1/4 oz.	1/4 oz.
PNL582T1	Panel, L.H. Side			1	1				
PNL582T2	Panel, R.H. Side	1	1	1	1				
PNL582T3	Panel, L.H. Side					1			
PNL582T4	Panel, R.H. Side					1			
PNL582T5	Panel, L.H. Side						1		
PNL582T6	Panel, R.H. Side						1		
PNL582T7	Panel L.H. Side	1	1						
PNL587WT1	Panel, L. - Hand							1	1
PNL587WT2	Panel, R - Hand							1	1
PNL589T1	Panel, Front								
PNL589T2	Panel, Front	1	1	1	1	1			
PNL589T3	Panel, Front						1		
PNL589T4	Panel, Front							2	2
PNL592T1	Panel, Top	1	1	1	1				
PNL592T2	Panel, Top					1			
PNL592T3	Panel, Top						1		
PNL584T1	Panel, Top Left							1	1
PNL588T1	Panel, Top Center								1
PNL591T1	Panel, Top Right							1	1
PNL593T1	Panel, Blank Off							1	2
PNL593T3	Panel, Blank Off		2						
PNL594T3	Panel, Blank Off		1						
PNL594T4	Panel, Blank Off								
PNL594T1	Panel, Bottom							2	3
A393632001	Panel, Blank Off	1							
PNL585WT3	Panel, Front Louver							2	2
PNL600	Panel, Valve Access						1	1	1
E620569	Screw, Access	6	6	6	6	6	6		
H606002	Retainer	6	6	6	6	6	6		
H543002	Clip	6	6	6	6	6	6		
PLT943	Plate, Rating	1	1	1	1	1	1		
HI-14-210	#10 x 5/8 Tek Screw	40	40	40	40	40	40		
354052029	Gasket 4"	6	6	6	6	6	6		
A444013001	Gasket	20'	20'	20'	20'	20'	20'		
H302020	1/4-20 x 1 1/4 Screw	2	2	2	2	2	2		
ENC65A001	3/8 x .032 x 3/4 Spacer	2	2	2	2	2	2		
H520 005	1/4-20 Lock Nut	2	2	2	2	2	2		
B471006002	D/B Nameplate (8")	1	1	1	1	1	1		
0737P08	1/4-20 x 1 1/4 Screw							4	6
STU18	Stud, Wing Head							12	18
RTR40	Retainer, Stud							12	18
RCP2	Receptacle, Clip-On							12	18
SCR43	Screw, Self-Tap							62	85
016P19	5/8-11 x 2 Screw							6	8
0348P00	Nut							6	8
016P01	Washer, Lock							6	8
012P17	3/8-16 x 1 3/4 Screw							8	12
012P03	Washer							8	12
012P01	Washer, Lock							8	12
012P00	Nut							8	12
028P09	Screw, Round Head							4	6
010P00	Nut, 1/4							12	15
010P01	Washer, Lock 1/4							12	15
COP006 .035 x 012	Spacer							4	6
010P23C	1/4-20 x 2 1/2 Screw							4	6
GKT358	Gasket							25'	25'
STR26	Strip							2	2
010P13	1/4-20 x 1 1/4 Screw							2	2

STANDARD PARTS SMALL COWL				COMP. SPRING MTG. STUD		CONDENSER			RECEIVER			FAN MOTORS				FAN		FAN MOTOR MTG.	SHROUD			DUAL PRESS. CNT.	BRACKET, CONTROL	VALVE, R-OUT	GASKET, R-OUT VALVE	HEAD PRESS. CONT. VAL.
				PUMP END	MOTOR END							115-1-60	208-1-60	230-1-60	460-1-60											
Nominal HP	Refrigerant	Unit Model # SCO	Compressor #	GB94	GB119	GC238	GC167	GC104	GB115	GB116	GB90	MTR901	MTR904	MTR803	MTR805	GB163	GC162	BRK264	GC241	GC170	GC106	CNT22	650B395	VAL435	GA467	VAL591T1
½	R-12	05CL	5CL	2	1	1			1			1	1	1	1	1		1	1			1	1	1	1	1
¾	R-12	08CL	8CL	2	1		1			1		1	1	1	1		1	1		1		1	1	1	1	1
¾	R-12	09CL	9CL	2	1		1			1		1	1	1	1		1	1		1		1	1	1	1	1
1	R-12	10CL	10CL	2	1			1			1	1	1	1	1	1		1			1	1	1	1	1	1
1	R-12	11L	11L	2	1			1			1	1	1	1	1	1		1			1	1	1	1	1	1

STANDARD PARTS SMALL COWL				COMP. MTG. SPACERS	CONDENSER		RECEIVER	FAN MOTORS		FAN	FAN MOTOR MOUNTING	SHROUD	DUAL PRESS. CNT.	BRACKET	VAL R-OUT	GASKET, R-OUT VALVE	FUSIBLE PLUG	LIQUID INJECTION KIT		HEAD PRESSURE CONTROL VALVE	
								FOR 208-230-1-60	FOR 230-460-3-60												
Nominal HP	Refrigerant	Unit Model # SCO -	Compressor #	GA500	CDS332	CDS333	REC77	MTR1081	MTR1083	GC1085	MTG45	SHR14	CNT22	650B 395	VAL435	GA467	PLU135	KIT195-2	KIT195-3	VAL591T1	
1½	R-12	15H	15H/CF/LF	4	1		1	1	1	1	1	1	1	1	1	1	1			1	
1½	R-12	15C	15C/ELF	4	1		1	1	1	1	1	1	1	1	1	1	1			1	
1½	R-12	15L	15L	4	1		1	1	1	1	1	1	1	1	1	1	1			1	
1½	R-22	15CF	15H/CF/LF	4	1		1	1	1	1	1	1	1	1	1	1	1			1	1
1½	R-22	15LF	15H/CF/LF	4	1		1	1	1	1	1	1	1	1	1	1	1	1			1
1½	R-502	15LF	15H/CF/LF	4	1		1	1	1	1	1	1	1	1	1	1	1				1
1½	R-502	15ELF	15C/ELF	4	1		1	1	1	1	1	1	1	1	1	1	1				1
2	R-12	20H	20H/CF/LF	4		1	1	1	1	1	1	1	1	1	1	1	1			1	
2	R-12	20C	20C/ELF	4		1	1	1	1	1	1	1	1	1	1	1	1			1	
2	R-12	20L	20L	4		1	1	1	1	1	1	1	1	1	1	1	1			1	
2	R-22	20HF	20HF	4		1	1	1	1	1	1	1	1	1	1	1	1				1
2	R-22	20CF	20H/CF/LF	4		1	1	1	1	1	1	1	1	1	1	1	1				1
2	R-22	20LF	20H/CF/LF	4		1	1	1	1	1	1	1	1	1	1	1	1		1		1
2	R-22	20ELF	20C/ELF	4		1	1	1	1	1	1	1	1	1	1	1	1				1
2	R-502	20LF	20H/CF/LF	4		1	1	1	1	1	1	1	1	1	1	1	1				1
2	R-502	20ELF	20C/ELF	4		1	1	1	1	1	1	1	1	1	1	1	1				1

264

STANDARD PARTS SMALL COWL				COMPRESSOR	MOUNTING SPACER	CONDENSER		RECEIVER		FAN MOTORS FOR 208-230-1-60	FAN MOTORS FOR 440-1-60	FAN	FAN MOTOR MOUNTING	SHROUD	DUAL PRESS. CONT.	BRACKET CONTROL	VALVE R-OUT		GASKET, R-OUT VALVE	FUSIBLE PLUG	LIQUID	INJECTION	KIT	HEAD PRESSURE CONTROL VALVE			
Nominal HP	Refrigerant	Unit Model # SCO	Compressor #	GA500	GA1774	CDS334	CDS335	REC67	REC68	MTR1084	MTR1085	FAN5	MTG46	SHR15	CNT22	650B 395	VAL332	VAL331	GA467	PLU135	KIT1954	KIT1956	KIT1957	VAL591T1	E219 014	VAL592T1	354 498002
3	R-12	30H	30H/LF	4		1		1		1	1	1	1	1	1	1	1		1	1				1			
3	R-12	32C	32C/ELF	4		1		1		1	1	1	1	1	1	1	1		1	1				1			
3	R-12	30C	30C/ELF		4	1		1		1	1	1	1	1	1	1	1		1	1				1			
3	R-12	30L	30L		4	1		1		1	1	1	1	1	1	1	1		1	1				1			
3	R-22	30HF	30HF	4		1		1		1	1	1	1	1	1	1	1		1	1						1	
3	R-22	30CF	30CF	4		1		1		1	1	1	1	1	1	1	1		1	1						1	
3	R-22	30LF	30H/LF	4		1		1		1	1	1	1	1	1	1	1		1	1	1					1	
3	R-22	32ELF	32C/ELF	4		1		1		1	1	1	1	1	1	1	1		1	1		1				1	
3	R-22	30ELF	30C/ELF		4	1		1		1	1	1	1	1	1	1	1		1	1		1				1	
3	R-502	30LF	30H/LF	4		1		1		1	1	1	1	1	1	1	1		1	1						1	
3	R-502	32ELF	32C/ELF	4		1		1		1	1	1	1	1	1	1	1		1	1						1	
3	R-502	30ELF	30C/ELF		4	1		1		1	1	1	1	1	1	1	1		1	1						1	
5	R-12	50H	50H/LF		4		1		1	1	1	1	1	1	1	1		1	1	1					1		
5	R-12	50C	50C/ELF		4		1		1	1	1	1	1	1	1	1		1	1	1					1		
5	R-12	50L	51L		4		1		1	1	1	1	1	1	1	1		1	1	1					1		
5	R-22	52HF	52HF		4		1		1	1	1	1	1	1	1	1		1	1	1							1
5	R-22	50CF	50CF		4		1		1	1	1	1	1	1	1	1		1	1	1							1
5	R-22	50LF	50H/LF		4		1		1	1	1	1	1	1	1	1		1	1	1			1				
5	R-22	50ELF	50C/ELF		4		1		1	1	1	1	1	1	1	1		1	1	1			1				
5	R-502	50LF	50H/LF		4		1		1	1	1	1	1	1	1	1		1	1	1							1
5	R-502	50ELF	50C/ELF		4		1		1	1	1	1	1	1	1	1		1	1	1							1

STANDARD PARTS SMALL COWL				COMP. MOUNTING SPACER	CONDENSER		RECEIVER	FAN MOTORS FOR 208-230-1-60	FAN MOTORS FOR 460-1-50	FAN MOTORS FOR 200-230-1-60	FOR 460-1-60	FANS		FAN MOTOR MOUNTING	SHROUD	DUAL PRESSURE CONTROL	OIL FAILURE CONTROL	BRACKET CONTROL	VALVE R-OUT	GASKET, R-OUT VALVE	FUSIBLE PLUG	LIQUID	INJECTION	KIT	HEAD PRESSURE CONTROL VALVE			
Nominal HP	Refrigerant	Unit Model # SCO	Compressor #	GA1774	CDS336	CDS337	REC68	MTR1084	MTR1085	MTR1086	MTR1087	FAN45	FAN49	MTG47	SHR16	CNT22	CNT106	650B 395	VAL331	GA467	PLU135	KIT195T9	KIT195T10	KIT195T12	E219 014	VAL679T2	354 49800D	A5795 01073
7½	R-12	75H	76PH/C/LF	4	1		1	1	1			1		1	1	1		1	1	1	1				1			
7½	R-12	75PL	76PL	4	1		1	1	1			1		1	1	1	1	2	1	1	1				1			
7½	R-12	75PC	77PC/ELF	4	1		1	1	1			1		1	1	1	1	2	1	1	1				1			
7½	R-22	75HF	75HF	4	1		1	1	1			1		1	1	1		1	1	1	1						1	
7½	R-22	75CF	75CF	4	1		1	1	1			1		1	1	1		1	1	1	1						1	
7½	R-22	75PLF	76PH/C/LF	4	1		1	1	1			1		1	1	1		1	1	1	1	1					1	
7½	R-22	75PELF	77PC/ELF	4	1		1	1	1			1		1	1	1	1	2	1	1	1	1					1	
7½	R-502	75PLF	76PH/C/LF	4	1		1	1	1			1		1	1	1		1	1	1	1						1	
7½	R-502	75PELF	77PC/ELF	4	1		1	1	1			1		1	1	1	1	2	1	1	1						1	
10	R-12	100PH	101PH/C/ELF	4		1	2			1	1		1	1	1	1	1	2	1	1	1				1			
10	R-12	100PC	101PH/C/ELF	4	1		1			1	1		1	1	1	1	1	2	1	1	1				1			
10	R-12	104PL	104PL	4	1		1			1	1		1	1	1	1	1	2	1	1	1						1	
10	R-22	100PHF	100PHF	4		1	2			1	1		1	1	1	1	1	2	1	1	1						1	
10	R-22	100PCF	111PHF/CF	4	1		1			1	1		1	1	1	1	1	2	1	1	1						1	
10	R-22	100PELF	101PH/C/ELF	4	1		1			1	1		1	1	1	1	1	2	1	1	1		1				1	
10	R-502	100PELF	101PH/C/ELF	4	1		1			1	1		1	1	1	1	1	2	1	1	1						1	
15	R-12	154PC	154PH/C/ELF	4		1	2	1	1			1		1	1	1	1	2	1	1	1					1		
15	R-22	154PELF	154PH/C/ELF	4		1	2	1	1			1		1	1	1	1	2	1	1	1			1				1
15	R-502	154PELF	154PH/C/ELF	4		1	2	1	1			1		1	1	1	1	2	1	1	1							1

OPTIONAL PARTS SMALL COWL				CRANKCASE HEATER		OVERSIZE RECEIVER	RECEIVER	INLET VALVE	OVERSIZE COND.	OVERSIZE BASE	LIQ. LINE DRIER & MOISTURE IND. SIGHT GLASS	RELIEF VALVE 3/8 (REC. INLET)	SUC. ACCUM.	SUCTION LINE	VIBRATION ELIM.	DIS. LINE VIB. ELIM.
				120V	240V											
Nominal HP	Refrigerant	Unit Model # SCO	Compressor #	E218 073	E218 072	REC77	VAL458	VAL629	CDS333	BAS117	LLA1	0608P65	ACC12	0802G03	0802G04	0802G02
½	R-12	05CL	5CL	1	1	1	1	1	1	1	1	1	1	1		1
¾	R-12	08CL	8CL	1	1	1	1	1	1	1	1	1	1		1	1
¾	R-12	09CL	9CL	1	1	1	1	1	1	1	1	1	1		1	1
1	R-12	10CL	10CL	1	1	1	1	1	1	1	1	1	1		1	1
1	R-12	11L	11CL	1	1	1	1	1	1	1	1	1	1		1	1

OPTIONAL PARTS SMALL COWL				CRANKCASE HEATER		COMPRESSOR SPRING MOUNTS		RELIEF VALVE	HEATED RECEIVER		RECEIVER HTR.		RECEIVER HEATER THTST.	CHECK VALVE HEATED RCVR.	OVERSIZE RECEIVER	HEATED RECEIVER W/INSL.	RECEIVER INLET VALVE	RELIEF VALVE 1/8 NPT*	OIL SEPARATOR	OVERSIZE CONDENSER	OVERSIZE CONDENSER	OVERSIZE BASE	LIQ. LINE DRIER & SIGHT GLASS	RELEIF VALVE 3/8 NPT	SUCTION ACCUMULATOR		SUCT. LINE VIB. ELIM.	DISCH. LINE VIB. ELIM.	SUCTION ACCUM. KIT	COMPRESSOR BODY COOLING FAN ASSEMBLY			LIQ. INJ. KIT	
				120V	240V	PUMP END	MOTOR END				120V	230V																		208-1-60	230-1-60	440-1-60		
Nominal HP	Refrigerant	Unit Model # SCO	Compressor #	E218 073	E218 072	KIT393T3	KIT393T4	VAL685T2	REC83	HTR94T6	HTR94T5		CNT229	VAL387	REC67	REC83	GA1953	VAL685T2	SEP24	CDS333	CDS334	BAS117	LLA1	0608P65	ACC12	ACC4	0802G07	0802G04	OPT15	FAN11A	FAN10A	FAN12A	KIT195T2	KIT195T3
1½	R-12	15H	15H/CF/LF	1	1	2	2	1	1	1	1		1	1	1		1	1	1	1		1	1	1	1		1	1	1	1	1	1		
1½	R-12	15C	15C/ELF	1	1	2	2	1	1	1	1		1	1	1		1	1	1	1		1	1	1	1		1	1	1	1	1	1		
1½	R-12	15L	15L	1	1	2	2	1	1	1	1		1	1	1		1	1	1	1		1	1	1	1		1	1	1	1	1	1		
1½	R-22	15CF	15H/CF/LF	1	1	2	2	1	1	1	1		1	1	1	1	1	1	1	1		1	1	1	1		1	1	1	1	1	1	1	
1½	R-22	15LF	15H/CF/LF	1	1	2	2	1	1	1	1		1	1	1	1	1	1	1	1		1	1	1	1		1	1	1	1	1	1	1	
1½	R-502	15LF	15H/CF/LF	1	1	2	2	1	1	1	1		1	1	1	1	1	1	1	1		1	1	1	1		1	1	1	1	1	1	1	
1½	R-502	15ELF	15C/ELF	1	1	2	2	1	1	1	1		1	1	1	1	1	1	1	1		1	1	1	1		1	1	1	1	1	1	1	
2	R-15	20H	20H/CF/LF	1	1	2	2	1	1	1	1		1	1	1	1	1	1	1		1	1	1	1		1	1	1	1	1	1	1		
2	R-12	20C	20C/ELF	1	1	2	2	1	1	1	1		1	1	1	1	1	1	1		1	1	1	1		1	1	1	1	1	1	1		
2	R-12	20L	20L	1	1	2	2	1	1	1	1		1	1	1	1	1	1	1		1	1	1	1		1	1	1	1	1	1	1		
2	R-22	20HF	20HF	1	1	2	2	1	1	1	1		1	1	1	1	1	1	1		1	1	1	1	1		1	1	1	1	1	1		1
2	R-22	20CF	20H/CF/LF	1	1	2	2	1	1	1	1		1	1	1	1	1	1	1		1	1	1	1	1		1	1	1	1	1	1		1
2	R-22	20LF	20H/CF/LF	1	1	2	2	1	1	1	1		1	1	1	1	1	1	1		1	1	1	1	1		1	1	1	1	1	1		1
2	R-22	20ELF	20C/ELF	1	1	2	2	1	1	1	1		1	1	1	1	1	1	1		1	1	1	1	1		1	1	1	1	1	1		1
2	R-502	20LF	20H/CF/LF	1	1	2	2	1	1	1	1		1	1	1	1	1	1	1		1	1	1	1	1		1	1	1	1	1	1		1
2	R-502	20ELF	20C/ELF	1	1	2	2	1	1	1	1		1	1	1	1	1	1	1		1	1	1	1	1		1	1	1	1	1	1		1

* In place of fusible plug

766

OPTIONAL PARTS SMALL COWL				CRANKCASE HTR.		COMPRESSOR SPRING MOUNT				RELEIF VALVE	HEATED RECEIVER		RECEIVER HTR.		RECEIVER HEATER THTST.	CHECK VALVE HTD. RCV'R.	OVERSIZE RECEIVER	HEATED RECEIVER w/INSULATION		RECEIVER INLET VALVE	RELIEF VALVE 1/8 NPT*	OIL SEPARATOR		OVERSIZE CONDENSER		OVERSIZE BASE	LIQUID LINE DRIER & MOISTURE IND.		SUCTION ACCUM.		SUCTION ACCUM. RETURN KIT	SUCTION LINE VIBRATION ELIM.		DISCH. LINE VIBRATION ELIM.		COMP. BODY COOLING FAN ASSEMBLY		
				120V	240V	PUMP END	MOTOR END	PUMP END	MOTOR END				120V	230V																							208-1-60	230-1-60	440-1-60
Nominal HP	Refrigerant	Unit Model # SCO	Compressor #	E218 073	E218 072	KIT393T5	KIT393T5	KIT393T6	KIT393T7	VAL685T2	REC81	REC82	HTR94T6	HTR94T5	CNT229	VAL389	REC68	REC81	REC82	VAL367	VAL685T2	SEP24	SEP25	CDS335	CDS336	BAS119	LLA2	LLA3	ACC4	A379 651001	OPT15	0802G08	0802G10	0802G04	0802G07	FAN11A	FAN10A	FAN12A
3	R-12	30H	30H/LF	1	1					1	1		1	1	1	1	1	1		1	1	1		1		1	1			1	1	1		1		1	1	1
3	R-12	32C	32C/ELF	1	1					1	1		1	1	1	1	1	1		1	1	1		1		1	1			1	1	1		1		1	1	1
3	R-12	30C	30C/ELF	1	1			2	2	1	1		1	1	1	1	1	1		1	1	1		1		1	1			1	1	1		1		1	1	1
3	R-12	30L	30L	1	1			2	2	1	1		1	1	1	1	1	1		1	1	1		1		1	1		1	1	1	1		1		1	1	1
3	R-22	30HF	30HF	1	1	2	2			1	1		1	1	1	1	1	1		1	1	1		1		1	1		1		1	1		1		1	1	1
3	R-22	30CF	30CF	1	1	2	2			1	1		1	1	1	1	1	1		1	1	1		1		1	1		1		1	1		1		1	1	1
3	R-22	30LF	30H/LF	1	1					1	1		1	1	1	1	1	1		1	1	1		1		1	1		1		1	1		1		1	1	1
3	R-22	32ELF	32C/ELF	1	1	2	2			1	1		1	1	1	1	1	1		1	1	1		1		1	1		1		1	1		1		1	1	1
3	R-22	30ELF	30C/ELF	1	1			2	2	1	1		1	1	1	1	1	1		1	1	1		1		1	1		1		1	1		1		1	1	1
3	R-502	30LF	30H/LF	1	1					1	1		1	1	1	1	1	1		1	1	1		1		1	1		1		1	1		1		1	1	1
3	R-502	32ELF	32C/ELF	1	1	2	2			1	1		1	1	1	1	1	1		1	1	1		1		1	1		1		1	1		1		1	1	1
3	R-502	30ELF	30C/ELF	1	1			2	2	1	1		1	1	1	1	1	1		1	1	1		1		1	1		1		1	1		1		1	1	1
5	R-12	50H	50H/LF	1	1					1		1	1	1	1	1	2		1	1	1		1		1	1		1		1	1		1		1	1	1	1
5	R-12	50C	50C/ELF	1	1					1		1	1	1	1	1	2		1	1	1		1		1	1		1		1	1		1		1	1	1	1
5	R-12	50L	51L	1	1					1		1	1	1	1	2		1	1	1		1		1	1		1		1	1		1		1	1	1	1	
5	R-22	52HF	52HF	1	1			2	2	1		1	1	1	1	1	2		1	1	1		1		1	1		1		1	1		1		1	1	1	1
5	R-22	50CF	50CF	1	1			2	2	1		1	1	1	1	1	2		1	1	1		1		1	1		1		1	1		1		1	1	1	1
5	R-22	50LF	50H/LF	1	1			2	2	1		1	1	1	1	1	2		1	1	1		1		1	1		1		1	1		1		1	1	1	1
5	R-22	50ELF	50C/ELF	1	1			2	2	1		1	1	1	1	1	2		1	1	1		1		1	1		1		1	1		1		1	1	1	1
5	R-502	50LF	50H/LF	1	1			2	2	1		1	1	1	1	1	2		1	1	1		1		1	1		1		1	1		1		1	1	1	1
5	R-502	50ELF	50C/ELF	1	1			2	2	1		1	1	1	1	1	2		1	1	1		1		1	1		1		1	1		1		1	1	1	1

* In place of fusible plug

OPTIONAL PARTS SMALL COWL

Nominal HP	Refrigerant	Unit Model # SCO	Compressor #	CRANKCASE HTR. 120V	CRANKCASE HTR. 240V	COMPRESSOR SPRING MOUNTS PUMP END	COMPRESSOR SPRING MOUNTS MOTOR END	COMPRESSOR SPRING MOUNTS PUMP END	COMPRESSOR SPRING MOUNTS MOTOR END	COMPRESSOR SPRING MOUNTS MOTOR END	RELIEF VALVE	HEATED RECEIVER	RECEIVER HTR. 120V	RECEIVER HTR. 230V	RECEIVER HTR. THTST.	CHECK VALVE-HTD. REC.	OVERSIZE RECEIVER	HTD. REC W/INSULATION	REC. INLET VALVE	RELIEF VALVE 1/8 NPT*	OIL SEPARATOR	OIL SEPARATOR	OIL SEPARATOR	OIL SEPARATOR	OVERSIZE COND.	LIQ. LINE DRIER & MOISTURE INDICATING SIGHT GLASS	LIQ. LINE DRIER & MOISTURE INDICATING SIGHT GLASS	RELIEF VALVE 3/8 NPT	SUCTION ACCUM.	SUCTION ACCUM.	HTD. SUCTION ACCUM.	HTD. SUCTION ACCUM.	SUCTION ACCUM. RETURN KIT	SUCTION LINE VIBRATION ELIM.	SUCTION LINE VIBRATION ELIM.	DISCHARGE LINE VIBRATION ELIM.	DISCHARGE LINE VIBRATION ELIM.	COMPRESSOR BODY COOLING FAN ASSEMBLY 208-1-60	COMPRESSOR BODY COOLING FAN ASSEMBLY 230-1-60	COMPRESSOR BODY COOLING FAN ASSEMBLY 440-1-60
				E218 073	E218 072	KIT3937T6	KIT3937T7	KIT3937T7	KIT3937T8	KIT3937T9	VAL685T2	REC82	HTR94T6	HTR94T5	CNT229	VAL389	REC68	REC82	VAL367	VAL685T2	SEP25	SEP26	SEP27	SEP48	CDS337	LLA3	LLA4	0809P65	ACC3	ACC5T1	ACC5T2	OPT15	0802G12	0802G10	0802G08	0802G07	FAN11A	FAN10A	FAN12A
7½	R-12	75H	76PH/C/LF	1	1			2	2		1	1	1	1	1	1	2	1	1	1			1		1	1		1		1	1	1	1		1		1	1	1
7½	R-12	75PL	76PL	1	1			2	2		1	1	1	1	1	1	2	1	1	1		1			1	1		1		1	1	1	1		1		1	1	1
7½	R-12	75PC	77PC/ELF	1	1			2	2		1	1	1	1	1	1	2	1	1	1		1			1	1		1		1	1	1	1		1		1	1	1
7½	R-22	75HF	75HF	1	1	2	2				1	1	1	1	1	1	2	1	1	1	1				1	1		1	1			1	1	1		1	1	1	1	1
7½	R-22	75CF	75CF	1	1	2	2				1	1	1	1	1	1	2	1	1	1	1				1	1		1	1			1		1		1	1	1	1	1
7½	R-22	75PLF	76PH/C/LF	1	1			2	2		1	1	1	1	1	1	2	1	1	1		1			1	1		1	1			1	1		1		1	1	1
7½	R-22	75PELF	77PC/ELF	1	1			2	2		1	1	1	1	1	1	2	1	1	1		1			1	1		1	1			1	1		1		1	1	1
7½	R-502	75PLF	76PH/C/LF	1	1			2	2		1	1	1	1	1	1	2	1	1	1		1			1	1		1	1			1	1		1		1	1	1
7½	R-502	75PELF	77PC/ELF	1	1			2	2		1	1	1	1	1	1	2	1	1	1		1			1	1		1	1			1	1		1		1	1	1
10	R-12	100PH	101PH/C/ELF	1	1			2		2	1	1	1	1	1	1		2	1	1				1			1	1		1	1	1	1		1		1	1	1
10	R-12	100PC	101PH/C/ELF	1	1			2		2	1	1	1	1	1	1	2	1	1	1				1	1		1	1		1	1	1	1		1		1	1	1
10	R-12	104PL	104PL	1	1			2		2	1	1	1	1	1	1	2	1	1	1				1	1		1	1		1	1	1	1		1		1	1	1
10	R-22	100PHF	100PHF	1	1	2	2				1	1	1	1	1	1		2	1	1		1					1	1		1	1	1		1		1	1	1	1
10	R-22	100PCF	111PHF/CF	1	1			2		2	1	1	1	1	1	1	2	1	1	1		1			1		1	1		1	1	1	1		1		1	1	1
10	R-22	100PELF	101PH/C/ELF	1	1			2		2	1	1	1	1	1	1	2	1	1	1		1			1		1	1		1	1	1	1		1		1	1	1
10	R-502	100PELF	101PH/C/ELF	1	1			2		2	1	1	1	1	1	1	2	1	1	1		1			1		1	1		1	1	1	1		1		1	1	1
15	R-12	154PC	154PH/C/ELF	1	1			2		2	1	1	1	1	1	1		2	1	1				1			1	1		1	1	1	1		1		1	1	1
15	R-12	154PELF	154PH/C/ELF	1	1			2		2	1	1	1	1	1	1		2	1	1				1			1	1		1	1	1	1		1		1	1	1
15	R-502	154PELF	154PH/C/ELF	1	1			2		2	1	1	1	1	1	1		2	1	1				1			1	1		1	1	1	1		1		1	1	1

* In place of fusible plug.

SINGLE COMPRESSOR
SINGLE CONDENSER FAN
STANDARD PARTS
COWL

Nominal HP	Refrigerant	Unit Model # CO-	Compressor #	CONDENSER CDS337	FAN FAN45	PAD, UNISORB GA1590	MOUNTING 26 IN. MTG47	RECEIVER REC82	SHROUD SHR16	STRIP STR26	VALVE VAL331	VALVE VAL426	VALVE VAL401	VALVE, PRES. REG. VAL676T1	VALVE, PRES. REG. VAL592T4	TEE 2-1/8 x 2-1/8 0362P23	ELBOW 90 2-1/8x2 0450P02	ELBOW 90 LONG RAD 0450P54	ELBOW 90 1-1/8 LR 0450P55	ELBOW 90x1-3/8 0450P00	ELBOW 5/8x90 0450P52	TEE, FLARE 0362P25	CAP 7/8 MUELLER 0644P06	CAP 1-1/8 MUELLER 0644P07	CAP 2-1/8 TUBE 0644P10	CAP TUBE 0644P04	CAP COPPER 0644P08	BUSHING, BRASS REDUCING 073P018	VALVE 25P135	N TERM. BOX ASSY. BOX2521	BOX ASSY. BOX3014	ELECTRIC BOX3020	CONTROL BOX2992	DIAGRAM, WIRING DGM1478	ENG. CHG. EC5000043	CRANKCASE HEATER GA1521	CRANKCASE HEATER HTR94T5	I & O MANUAL ISR30	INSTALLATION, CHRG. VAL. IST4	LAYOUT, PANEL LYO1397	MOTOR MTR1086	PIPING SCHEMATIC SCH21
10	R-12	10SC	Herm. 6 Cyl. - 2500 CFH 230/3/60 100PHC	1	1	2	1	1	1	1	1	1	1	1		1	1	1	1				1	1	1			1	2	1	1			1	1	1	1	1	1	1	1	1
10	R-22	10SCF	Com. Herm. 4 Cyl. - 1356 CFH 230/3/60 100PHF	1	1	2	1	1	1	1	1	1	1		1	1			1	1	1	1		1		1	1	1	2	1		1		1	1	1	1	1	1	1	1	1
10	R-502	10SLF	Com. Herm. 6 Cyl. - 2500 CFH 230/3/60 100PELF	1	1	2	1	1	1	1	1	1	1		1	1			1	1	1	1		1		1	1	1	2	1			1	1	1	1	1	1	1	1	1	1

SINGLE COMPRESSOR
TWO CONDENSER FANS
STANDARD PARTS
COWL

Nominal HP	Refrigerant	Unit Model # CO-	Compressor #	CAP 2-1/8 TUBE 0644P10	CAP 7/8 MEULLER 0644P06	CAP COPPER 0644P08	CAP 1-1/8 MUELLER 0644P07	CAP 2-5/8 0644P11	CAP 1-5/8 0644P09	REDUCING BUSHING BRASS 073P018	VALVE 25P135	BOARD, TERMINAL BRD24	BOX, ASSY-ELEC. CONTROL BOX3016	BOX3015	BOX2993	BOX2995	BOX2997	BOX3017	BOX2999	CONTROL MOTOR PROTECTION CNT138T2	BLOCK, CUTOUT FUSE CT08	DIAGRAM, WIRING DGM1398	ENG. CHG. 9-9-74 EC500-0043	FUSE FUS4	HEATER HTR59T1	CRANKCASE HEATER HTR94T1	IEO MANUAL ISR31	INSTALLATION CHG. VALVE IST4	LAYOUT PANEL LYO1398	MOTOR MTR1086	MTR1084	PIPING SCHEMATIC SCH17	N TERM. BOX ASSY. BOX2521	CC HEATER GA1521	IEO MANUAL ISR30
15	R-502	15SLF	Com. - Herm. 3845 CFH 230/460-3-60 206LFN	1	2					1	2	1				1				1	1	1	1	1	1	1	1	1	1		1	1			
15	R-22	15SCF	Com. - Herm. 4 Cyl. 200 CFM 230-3-60 151PHFC		2	1				1	2				1							1	1			1		1	1		1	1	1	1	1
15	R-12	15SC	Com. - Herm 3000 CFH 230-3-60 154PHCELF	1	2					1	2			1								1	1			1		1	1		1	1	1	1	1
17	R-12	17SC	Com. - Herm. 4428 CFH 230/460-3-60 157CN	1			2			1	2	1	1							1	1	1	1	1	1	1	1	1	1	1		1			
20	R-12	20SC	Com. - Herm. 5127 CFH 230/460-3-60 208CN			1	1	1		1	2	1						1		1	1	1	1	1	1	1	1	1	1			1			
20	R-502	20SLF	Com. - Herm. 5127 CFH 230/460-3-60 308LFN	1	2					1	2	1							1	1	1	1	1	1	1	1	1	1	1			1			
20	R-22	20SCF	Com. - Herm. 6 Cyl. - 3000 CFH 230-3-60 204PHFCF		1		1		1	1	2						1					1	1			1		1	1	2		1	1	1	1

266

SINGLE COMPRESSOR TWO CONDENSER FANS STANDARD PARTS COWL				CONDENSER		BUSHING	WIRE WAY 2-1/2x4	ENG. CHG. 2-13-76	FAN		MOUNTING 26 IN.	RECEIVER-SUPPORT ASSY.	SHROUD	STRIP	VALVE	VALVE, PRES. REG 7/8	VALVE, PRES. REG 7/8	VALVE, ANGLE 1-1/8	TEE 7/8x5/8x5/8	TEE 1-3/8x1-1/8x7/8	TEE 1-1/8	TEE2-1/8x2-1/8	TEE 1-3/8x1-3/8	TEE 1-5/8x1-1/8	TEE 1-1/8x7/8	TEE 1-3/8x1-1/8	TEE 7/8x7/8	TEE 1-5/8x1-3/8x1-3/8	ELBOW 90x1-5/8	ELBOW 5/8x90	ELBOW 90 LONG RAD.	ELBOW 90x1-1/8 LR	ELBOW 90x2-5/8	ELBOW 90x1-3/8	ELBOW 90x2-1/8x2	VALVE PRESSURE
Nominal HP	Refrigerant	Unit Model # CO-	Compressor #	CDS337	CDS336	BUS29	DUC3	EC56000471	FAN45	FAN49	MTG47	R89521	SHR16	STR26	VAL426	VAL677T1	VAL678T1	VAL784	0362P19	0362P114	0362P22	0362P23	0362P36	0362P44	0362P28	0362P53	0362P15	0362P56	0450P05	0460P52	0450P54	0450P56	0450P22	0450P00	0450P02	0608P65
15	R-502	15SLF	Com. - Herm. 3845 CFH 230/460-3-60 208LFN		2		1	1	2		2	1	2	2	1	1		2	1	1			1		1					1	1			1	1	1
15	R-22	15SCF	Com. - Herm. 4 Cyl. 200 CFM 230-3-60 151PHFC		2		1	1	2		2	1	2	2	1	1		2	1			1			1		1			1	1	1		1		1
15	R-12	15SC	Com. - Herm 3000 CFH 230-3-60 154PHCELF		2		1	1	2		2	1	2	2	1		1	1	1	1			1		1					1	1			1	1	1
17	R-12	17SC	Com. - Herm. 4428 CFH 230/460-3-60 157CN	2			1	1		2	2	1	2	2	1		1	2	1		1		1			1				1	1			1	1	1
20	R-12	20SC	Com. - Herm. 5127 CFH 230/460-3-60 208CN	2		1	1	1		2	2	1	2	2	1		1	2	1				1	1				1	1	1	1		1			1
20	R-502	20SLF	Com. - Herm. 5127 CFH 230/460-3-60 308LFN	2			1	1		2	2	1	2	2	1	1		2	1	1			1		1					1	1			1	1	1
20	R-22	20SCF	Com. - Herm. 6 Cyl. 3000 CFH 230-3-60 204PHFCF	2			1	1		2	2	1	2	2	1	1		2	1		2	1							1	1	1	1	1			1

TWO COMPRESSOR TWO CONDENSER FANS STANDARD PARTS COWL				CONDENSER		COUPLING	WIRE WAY	ENG. CHG. 9-9-74	FAN		GASKET, SIGHT GLASS	RETAINER, SIGHT GLASS	LIQUID LEVEL IND.	MANIFOLD, SUCTION			MOUNTING 26 IN.	RECEIVER/SUPPORT ASSY.		SHROUD	STRIP	VALVE							ELBOW, 90	ELBOW 90x1-3/8	ELBOW 90x1-5/8	ELBOW 5/8x90	ELBOW 90x1-1/8	ELBOW 90 LONG RAD.	VALVE PRESSURE
Nominal HP	Refrigerant	Unit Model # CO-	Compressor #	CDS336	CDS337	CPL39	DUC3	EC500-0043	FAN45	FAN49	GA1233	GB1091	IDR7	MFD82WT2	MFD82WT1	MFD82WT3	MTG47	R89622	R813922	SHR16	STR26	TUB2717W	VAL426	VAL427	VAL429	VAL430	VAL677T1	VAL677T2	VAL784	0396P20	0450P00	0450P05	0450P52	0450P56	0450P54	0608P65
15	R-502	15TLF	Com. - Herm. 4 Cyl. - 2000 CFM 230-3-60 (2) 75PELF	2		2	1	1	2		2	2	1		1		2	1		2	2	2	1		2		1		2	2	3		1		1	1
20	R-502	20TLF	Com. - Herm. 6 Cyl. - 2500 CFM 230-3-60 (2) 100PELF		2	2	1	1		2	2	2	1	1			2	1		2	2	2	1			2	1		2	2	3		1		1	1
TWO COMPRESSOR THREE CONDENSER FANS STANDARD PARTS																																				
25	R-502	25TLF	Com. - Herm 6 Cyl. - 3000 CFH 230-3-60 (2) 154PHCELF		3	2	1	1	3		2	2	1			1	3		1	3	3	2		1		2		1	1	2	1	2	1	1		1

SINGLE COMPRESSOR
THREE CONDENSER FANS
STANDARD PARTS
COWL

Nominal HP	Refrigerant	Unit Model # CO-	Compressor #	CONDENSER CDS337	WIREWAY DUC3	ENG. CHG. 9-9-74 EC500-0043	FAN FAN49	MOUNTING 26 IN. MTG47	REC/SUPPORT ASSY. R8139Z1	SHROUD SHR16	STRIP STR26	VALVE VAL427	PRESSURE VALVE VAL677T2	PRESSURE VALVE VAL676T2	VALVE VAL794	TEE 1-3/8x1-1/8x7/8 0362P114	TEE 7/8x5/8x5/8 0362P19	TEE1-1/8 0362P22	TEE7/8x1-1/8x5/8 0362P29	TEE1-5/8 0362P43	TEE1-5/8x1-3/8x1-3/8 0362P55	TEE 2-1/8x2-1/8 0362P23	TEE 0362P35	BUSHING FLUSH 1-3/8 0395P04	ELBOW 90x1-5/8 0450P05	ELBOW 90x2-5/8 0450P22	ELBOW 5/8x90 0450P52	ELBOW 90 x1-1/8 0450P55	ELBOW 90x1-3/8 0450P00	ELBOW 90x2-1/8x2 0450P02	VALVE, PRESSURE 0608P35
25	R-502	25SLF	Com. - Herm. 5760 CFH 230/460-3-60 409LFN	3	1	1	2	2	1	2	2	1	1		1	1	1	1	1	1	1			1	1	1	1	1			1
25	R-22	25SCF	Com. - Herm. 3321 CFH 230/460-3-60 255HFN	3	1	1	2	2	1	2	2	1	1		1	1	1	1	1			1	1				1	1	1	1	1
25	R-12	25SC	Com. - Herm. 5760 CFH 230/460-3-60 259CN	3	1	1	2	2	1	2	2	1		1	1	1	1	1	1	1	1			1	1	1	1	1			1
30	R-502	30SLF	Com. - Herm 6660 CFH 230/460-3-60 411LFN	3	1	1	3	3	1	3	3	1	1		1	1	1	1	1	1	1			1	1	1	1	1			1
30	R-22	30SCF	Com. - Herm. 3645 CFH 230/460-3-60 306HFN	3	1	1	3	3	1	3	3	1	1		1	1	1	1	1			1	1				1	1	1	1	1
30	R-12	30SC	Com. - Herm. 6660 CFH 230/460-3-60 311CN	3	1	1	3	3	1	3	3	1		1	1	1	1	1	1	1	1			1	1	1	1	1			1

TWO COMPRESSOR
TWO CONDENSER FANS
STANDARD PARTS
COWL

Nominal HP	Refrigerant	Unit Model # CO-	Compressor #	VALVE 25P135	BUSHING, REDUCING 073P01B	CAP 1-1/8 0644P07	CAP 2-1/8 0644P10	CAP 7/8 0644P06	CAP 1-5/8 0644P09	TEE 1-3/8x1-1/8x7/8 0362P114	TEE 7/8x5/8x5/8 0362P19	TEE1-1/8 0362P22	TEE2-1/8x2-1/8 0362P23	TEE 7/8x1-1/8x5/8 0362P29	TEE1-3/8x1-1/8 0362P53	TEE 1-1/8x7/8 0362P28	ENG. CHG. 2-13-76 EC5500047-1	BOX ASSY. BOX2996	ELECTRICAL BOX3000	CONTROL BOX3004	DIAGRAM, WIRING DGM1401	DGM1402	FUSE FUS4	HEATER, CRANKCASE HTR94T1	HEATER, CRANKCASE HTR94T2	I & O MANUAL ISR30	INSTALLATION, CHG. VAL IST4	LAYOUT, PANEL LYO1401	LYO1402	MOTOR MTR1084	MTR1086	SCHEMATIC, PIPING SCH19	SCH20	HEATER, CC GA1521	N. TERM. BOX ASSY. BOX2521
15	R-502	15TLF	Com. - Herm. 4 Cyl. - 2000 CFM 230-3-60 (2) 75PELF	2	1			2	1	2	1	1				1	1	1			1			1		1	1	1		1		1		1	1
20	R-502	20TLF	Com. - Herm. 6 Cyl. - 2500 CFM 230-3-60 (2) 100PELF	2	1		1	2		2	1	1				1	1		1		1			1		1	1	1			1	1		1	1
TWO COMPRESSOR THREE CONDENSER FANS STANDARD PARTS																																			
25	R-502	25TLF	Com. - Herm 6 Cyl. - 3000 CFM 230-3-60 (2) 154PHCELF	2	1	2	1			1	1	2	1	1	1					1		1	2	1		1	1		1		2		1	1	1

271

SINGLE COMPRESSOR THREE CONDENSER FANS STANDARD PARTS COWL				CAP 1-1/8	CAP2-5/8	CAP2-1/3	BUSHING, REDUCING BRASS	VALVE	BOARD TERMINAL	ELECTRIC CONTROL ASSEMBLY BOX						CONTROL MOTOR PROTECT.	BLOCK, CUTOUT FUSE	DIAGRAM WIRING		ENG. CHG. 9-9-74	FUSE	HEATER	HEATER, CRANKCASE	HEATER, CRANKCASE	I & O MANUAL	INSTALLATION, C.V.	LAYOUT, PANEL		MOTOR	SCHEMATIC, PIPING
Nominal HP	Refrigerant	Unit Model # CO-	Compressor #	0644P07	0644P11	0644P10	073P018	25P135	BRD24	BOX3019	BOX3005	BOX3007	BOX3018	BOX3001	BOX3003	CNT138T2	CT08	DGM1399	DGM1400	EC500-0043	FUS4	HTR59T1	HTR94T1	HTR94T2	ISR31	IST4	LYO1399	LYO1400	MTR1086	SCH18
25	R-502	25SLF	Com. - Herm. 5760 CFH 230/460-3-60 409LFN	2	1		1	2	1						1	1	1		1	1	2	1	2	1	1	1		1	3	1
25	R-22	25SCF	Com. - Herm. 3321 CFH 230/460-3-60 255HFN	2		1	1	2	1					1		1	1	1		1	2	1	2	1	1	1	1		3	1
25	R-12	25SC	Com. - Herm. 5760 CFH 230/460-3-60 259CN	2	1		1	2	1				1			1	1	1		2	1	2	1	1	1	1	1		3	1
30	R-502	30SLF	Com. - Herm 6660 CFH 230/460-3-60 411LFN	2	1		1	2	1			1				1	1		1	1	2	1	2	1	1	1		1	3	1
30	R-22	30SCF	Com. - Herm. 3845 CFH 230/460-3-60 308HFN	2	1		1	2	1		1					1	1	1		1	2	1	2	1	1	1	1		3	1
30	R-12	30SC	Com. - Herm. 6660 CFH 230/460-3-60 311CN	2	1		1	2	1	1						1	1	1		1	2	1	2	1	1	1	1		3	1

COWL OPTIONAL PARTS			FILTER, DRIER		CORE, FLTR. DR.	IND., MOISTURE & LIQUID		VALVE, SHUT-OFF		SWITCH, DISCONNECT 240V, 200A			SWITCH DISCONNECT 100A 480-600V			CLOCK DEF.	REC. OVERSIZE			ELIMINATOR, VIBRATION DISCHARGE				ELIMINATOR, VIBRATION LIQUID			VALVE SOLENOID LIQUID			COIL SOLENOID	FILTER SUCTION			
Nominal HP	Refrigerant	Unit Model # CO-	FLR18	FLR12	0824G00	IDR49	IDR50	VAL403	VAL402	SWT92	SWT95	SWT97	SWT93	SWT94	SWT96	TMR34T1	R12139Z1	R1295Z1	R1295Z2	0802G08	0802G10	0802G12	0802G13	0802G04	0802G07	0802G08	VAL648	VAL652	VAL653	COL119	FL94AT1	FL94AT2	FL94AT3	FL94AT4
10	R-22	10SCF										1	1			1				1				1			1			1	1			
10	R-502	10SLF							1			1	1			1				1				1			1			1	1			
10	R-12	10SC		1	1	1			1			1	1			1					1				1			1		1			1	
15	R-12	15SC		1	1	1			1	1				1		1		1				1			1			1		1			1	
15	R-22	15SCF		1	1	1			1			1	1			1		1		1					1			1		1	1			
15	R-502	15SLF		1	1	1			1			1	1			1		1			1				1			1		1			1	
15	R-502	15TLF		1	1	1			1			1	1			1		1			1				1			1		1		1		
17	R-12	17SC	1		1		1	1		1				1		1		1				1				1			1	1			1	
20	R-502	20SLF		1	1	1			1	1				1		1		1			1				1			1		1			1	
20	R-12	20SC	1		1		1	1		1				1		1		1					1			1			1	1			1	
20	R-502	20TLF		1	1	1			1	1				1		1			1		1				1			1		1			1	
20	R-22	20SCF		1	1	1			1	1				1		1		1		1					1			1		1		1		
25	R-12	25SC	1		1		1	1		1				1		1	1					1				1			1	1				1
25	R-22	25SCF	1		1		1	1		1				1		1	1				1					1			1	1			1	
25	R-502	25SLF	1		1		1	1			1				1	1	1					1				1			1	1				1
25	R-502	25TLF	1		1		1	1		1				1		1					1					1			1	1			1	
30	R-502	30SLF	1		1		1	1			1				1	1	1					1				1			1	1				1
30	R-22	30SCF	1		1		1	1		1				1		1	1				1					1			1	1			1	
30	R-12	30SC	1		1					1				1		1	1						1			1			1	1				1

COWL OPTIONAL PARTS			PANEL VT. DISC.	VIB. ISOLATOR MOUNTS		SEPARATOR, OIL				VALVE, CHECK			ACCUMULATORS NON-HEATED			ACCUMULATORS HEATED			HEATER		HEATED T'STAT	CHG. VALVE	ELIMINATOR VIB. (SUCTION)				LIQ. LINE ASSY.	VLAVE, RELIEF	VALVE, SHUT-OFF	REC. OVERSIZE
Nominal HP	Refrigerant	Unit Model # CO-	CAN3T3	ISO104T1	ISO105T1	SEP26	SEP27	SEP28	SEP48	VAL427	VAL428	VAL429	ACC5T1	ACC6T1	ACC7T1	ACC5T2	ACC6T2	ADC7T2	HTR94T1	HTR94T2	CNT229	25P135	0802G10	0802G12	0802G13	0802G14	LLA3	0608P65	VAL794	R1213922
10	R-22	10SCF	1	1		1				1			1			1			1		1	1	1				1	1		
10	R-502	10SLF	1	1		1				1			1			1			1		1	1	1				1	1		
10	R-12	10SC	1	1			1			1				1			1		1		1	1			1			1		
15	R-12	15SC	1	1					1		1			1			1			1	1	1			1					
15	R-22	15SCF	1	1		1				1			1			1				1	1	1	1							
15	R-502	15SLF	1	1			1				1		1				1			1	1	1			1					
15	R-502	15TLF	1		1		1			1				1			1			1	1	1		1						
17	R-12	17SC	1	1					1		1			1			1			1	1	1			1					
20	R-502	20SLF	1		1		1				1			1			1			1	1	1			1					
20	R-12	20SC	1		1			1				1		1			1			1	1	1			1					
20	R-502	20TLF	1		1		1			1				1			1			1	1	1			1					
20	R-22	20SCF	1		1	1				1				1			1			1	1	1		1						
25	R-12	25SC	1		1			1				1			1			1		1	1	1				1				
25	R-22	25SCF	1		1		1				1			1			1			1	1	1			1					
25	R-502	25SLF	1		1				1			1			1			1		1	1	1				1				
25	R-502	25TLF	1		1		1			1					1			1		1	1	1			1					1
30	R-502	30SLF	1		1				1			1			1			1		1	1	1				1				
30	R-22	30SCF	1		1		1				1				1			1		1	1	1			1					
30	R-12	30SC	1		1			1				1			1			1		1	1	1				1			1	

273

Exhibit C-2

FORM NO. 4032F

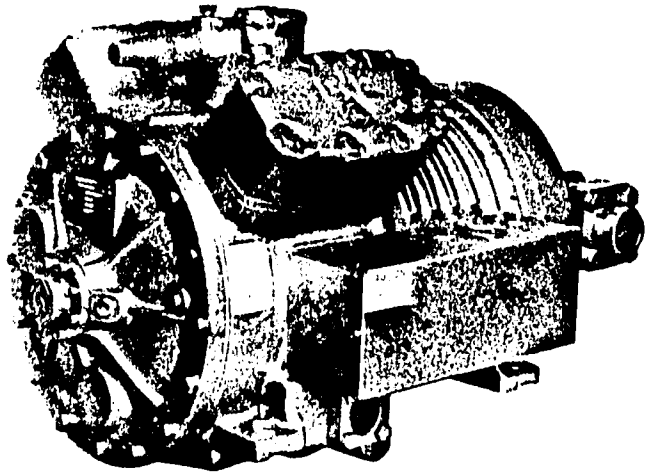

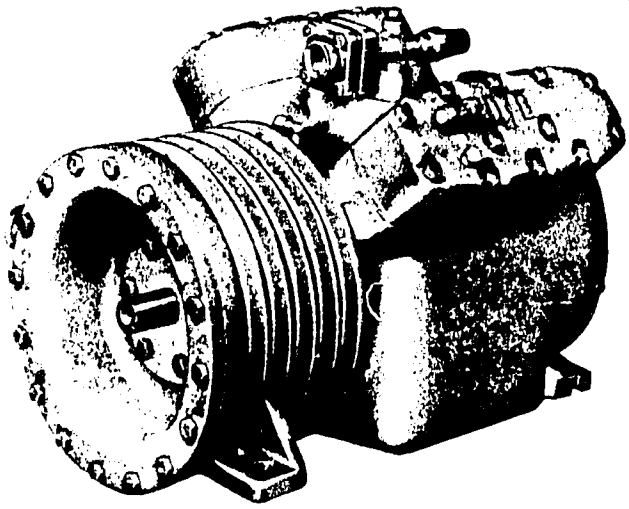

DUNHAM-BUSH

D/B METIC AND D-LINE COMPRESSOR REPLACEMENT PARTS CATALOG

1/2 THRU 20 H.P.

FOR 60 HZ AND 50 HZ UNITS

274

INTRODUCTION

DUNHAM-BUSH RESERVES THE RIGHT TO MAKE CHANGES IN SPECIFICATIONS AND DESIGN WITHOUT NOTICE.

1. When ordering specify compressor model, serial no. and type letter.
2. Give exact part no. and part description.
3. Parts specifications are subject to change without notice.
4. We recommend the purchase of complete valve plate assemblies and terminal stud kits.
5. Minimum order $25.00 net.
6. For terms of sale refer to latest revision of form 1278.
7. Claims—In the event of loss or damage in transit, the sales outlet should immediately place a claim against the delivering transportation co. Dunham Bush, Inc. cannot assume responsibility for such items when damage or loss is incurred during transit.
8. For prices consult latest revision of form 4632.
9. Current and out of production models are subject to change without notice.

COMPRESSOR NOMENCLATURE

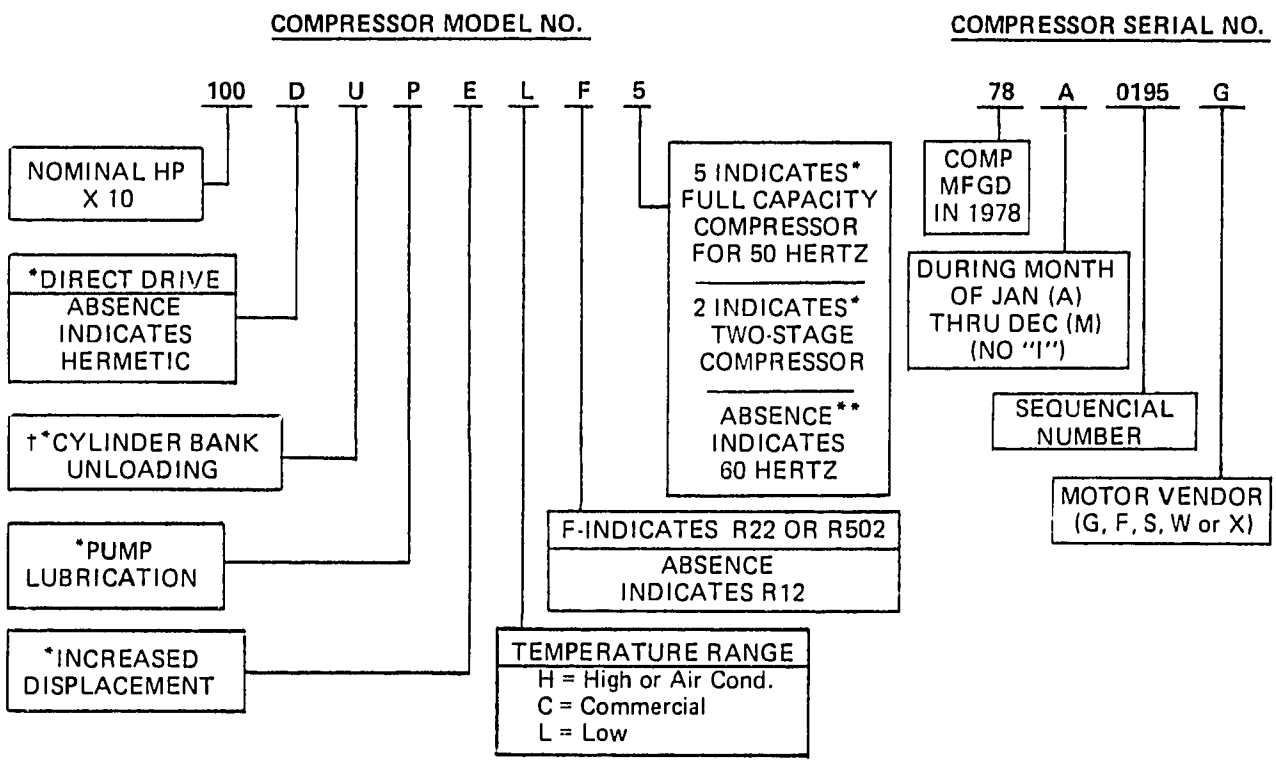

COMPRESSOR TYPE

The "type" letter which is stamped on the nameplate of the compressor changes whenever there is a major modification in the design of the compressor. The type letter must be indicated, as well as model number and serial number, when ordering parts.

NOTE:

Some D/B metic compressors can be used for different applications. These models use one of the following multi-designations: H/LF, H/CF/LF, C/ELF and H/C/ELF.

*IF FEATURE IS NOT USED NO LETTER OR NUMBER IS ADDED TO MODEL NO.

**50 Hz. compressor capacities may be determined by multiplying 60 Hz. compressor capacity by 0.833.

†UNLOADING COMPRESSORS ARE NOT LISTED. FOR INFORMATION CONCERNING THESE COMPRESSORS CONSULT PAGE 48 FOR CORRECT VALVE PLATES AND HEADS.

TABLE OF CONTENTS

DESCRIPTION	PAGE
Introduction	1
Unit Nomenclature	1
Compressor Model Index	2
D/B Metic Compressors	3
D-Line Compressors	4
Early Model Compressors	5
Comparable D-Line Displacements	6
SEMI-HERMETIC COMPRESSOR MODELS	
• D/B Metic 2 cylinder fractionels Current Production	7-8
• D/B Metic 2 cylinder Integrals Current Production	9-12
• D/B Metic 3/4 Cylinder Current Production	13-16
• D/B Metic 3/4 Cylinder Out of Production	17-18
• D/B Metic 6 Cylinder Current Production	19-22
• D/B Metic 6 Cylinder Out of Production	23-26

DESCRIPTION	PAGE
DIRECT DRIVE COMPRESSOR MODELS	
• D-Line 2 Cylinder Integral Current Production	27-30
• D-Line 3 Cylinder Current and out of Production	31-32
• D-Line 4 Cylinder Current Production	33-36
• D-Line 6 Cylinder Current Production	37-40
• D-Line 6 Cylinder Out of Production	41-44
KITS, ASSEMBLIES AND ACCESSORIES	
• D/B Metic & D-Line Standard & Unloader Valve Plate Assemblies	45
• D/B Metic & D-Line Gaskets - All Models	46
• D/B Metic Hermetic Compressors Electrical Accessories	47
• Unloader Kit Assemblies	48
• D/B Metic & D-Line Compressor Parts Kits	49
• D/B Metic & D-Line Compressor Mounting Assemblies	50

COMPRESSOR MODEL INDEX

D/B METIC SEMI-HERMETIC

60 HZ. MODELS	PAGE
5HCL	7-8
8HCL	7-8
9HCL	7-8
10HCL	7-8
11HCL	7-8
15H/CF/LF	9-12
15C/ELF	9-12
15L	9-12
20HF	9-12
20H/CF/LF	9-12
20C/ELF	9-12
20L	9-12
30HF	9-12
30H/LF	9-12
30CF	9-12
30C/ELF	13-16
30L	13-16
30EL	17-18
32C/ELF	9-12
50H/LF	13-16
50CF	13-16
50C/ELF	13-16
50L	23-26
50PEL	23-26
51PL	13-16
52HF	13-16
75HF	13-16
75CF	13-16
75H/LF	23-26
75PC/ELF	23-26
75PL	23-26
76PH/C/LF	13-16
76PL	19-22
77PC/ELF	13-16
100PHF	13-16
100PH/C/ELF	23-26
100PCF	23-26
101PH/C/ELF	19-22
104PL	19-22
111PHF/CF	13-16
150PHF	23-26
150PCF	23-26
151PHF/CF	13-16
154PH/C/ELF	19-22
174PCF	23-26
200PHF	23-26
201PHF/CF	19-22
204PHF/CF	19-22

50 HZ. MODELS	PAGE
15HF5	9-12
15H5/CF5/LF5	9-12
15C5/ELF5	9-12
15L5	9-12
20HF5	9-12
20H5/CF5/LF5	9-12
20C5/ELF5	9-12
20L5	17-18
22L5	9-12
30HF5	9-12
30H5/LF5	17-18
30CF5	9-12
30C5/ELF5	13-16
30L5	13-16
30EL5	23-26
32H5/LF5	9-12
41PL5	13-16
50H5/LF5	13-16
50CF5	13-16
50C5/ELF5	23-26
50PL5	23-26
50PEL5	23-26
51PH5/C5/LF5	13-16
52HF5	13-16
61PL5	19-22
62PC5/ELF5	13-16
75HF5	13-16
75PH5/LF5	23-26
75CF5	23-26
75PL5	19-22
75PL5/ELF5	23-26
77PH5/C5/ELF5	19-22
100PHF5	23-26
100PH5/C5/ELF5	23-26
100PCF5	23-26
101PHF5/CF5	19-22
101PH5/C5/ELF5	19-22
111PH5/CF5	19-22
150PHF5	23-26
151PH5/CF5	19-22
200PH5	23-26
201PHF5/CF5	19-22

D-LINE DIRECT DRIVE

60 HZ. MODELS	PAGE
15DH/CF/LF	27-30
15DC/ELF	27-30
15DL	27-30
20DHF	27-30
20DH/CF/LF	27-30
20DC/ELF	27-30
20DL	27-30
30DHF	27-30
30DH/LF	27-30
30DCF	27-30
30DC/ELF	33-36
30DL	33-36
30DEL	33-36
50DH/LF	33-36
50DCF	33-36
50DC/ELF	33-36
50DL	41-44
50DPEL	41-44
51DPL	33-36
51DPEL	33-36
52DHF	31-32
75DHF	33-36
75DCF	33-36
75DH/LF	41-44
75DPC/ELF	41-44
75DPL	41-44
76DPH/C/ELF	33-36
76DPL	41-44
77DPH/C/ELF	33-36
100DPHF	33-36
100DPCF	41-44
100DPH/ELF	41-44
101DPCF	33-36
101DPH/C/ELF	37-40
101DPL	37-40
111DPHF/CF	33-36
150DPHF	41-44
150DPCF	41-44
151DPHF/CF (4 Cyl.)	33-36
151DPCF (6 Cyl.)	37-40
154DPH/C/ELF	37-40
200DPHF	41-44
201DPHF	37-40
204DPHF/CF	37-40

50 HZ. MODELS	PAGE
15DHF5	27-30
15DH5/CF5/LF5	27-30
15DC5/ELF5	27-30
15DL5	27-30
20DHF5	27-30
20DH5/CF5/LF5	27-30
20DC5/ELF5	27-30
20DL5	31-32
30DHF5	27-30
30DCF5	27-30
30DH5/LF5	31-32
30DC5/ELF5	33-36
30DL5	33-36
30DEL5	41-44
31DPEL5	33-36
50DCF5	33-36
50DHF/LF5	33-36
50DC5/ELF5	41-44
50DPL5	41-44
50DPEL5	41-44
51DPH5/C5/ELF5	33-36
51DPL5	33-36
51DPEL5	37-40
52DHF5	31-32
75DHF5	33-36
75DCF5	41-44
75DPH5/LF5	41-44
75DPL5/ELF5	41-44
76DPCF5	33-36
76DPH5/C5/ELF5	33-36
76DPL5	37-40
77DPH5/C5/ELF5	37-40
100DPHF5	41-44
100DPCF5	41-44
101DPHF5/CF5	33-36
101DPCF5	33-36
101DPH5/C5/ELF5	37-40
111DPH5/CF5	33-36
150DPHF5	41-44
151DPHF5/CF5	37-40
201DPHF5/CF5	37-40

D/B METIC HERMETIC COMPRESSORS—CURRENT PRODUCTION

TYPICAL 2 CYLINDER FRACTIONAL HERMETIC COMPRESSOR

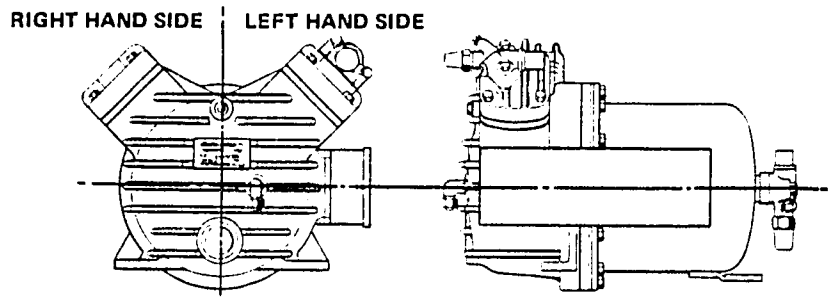

END VIEW

LEFT HAND SIDE VIEW

TYPICAL 2 CYLINDER INTEGRAL HERMETIC COMPRESSOR

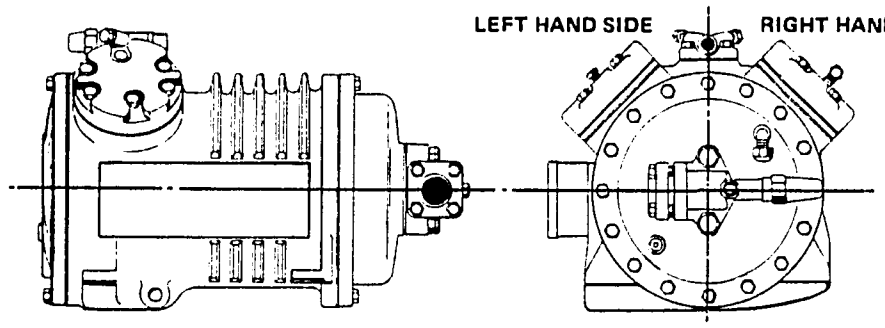

LEFT HAND SIDE VIEW

MOTOR END VIEW

TYPICAL 3 AND 4 CYLINDER HERMETIC COMPRESSORS

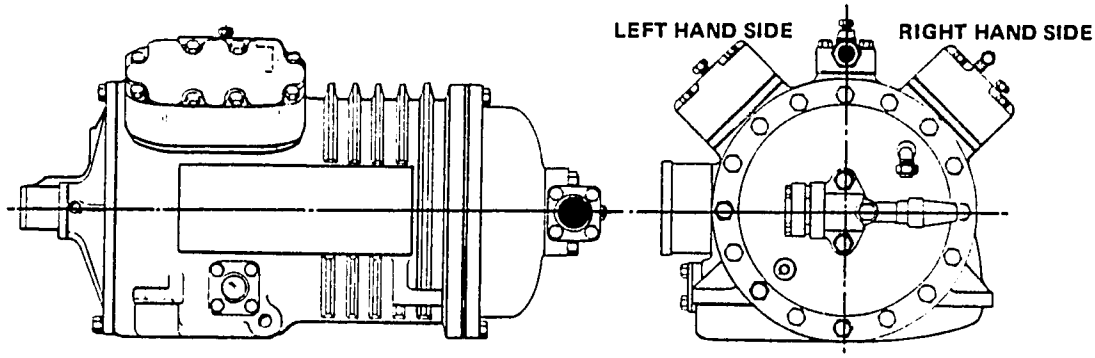

LEFT HAND SIDE VIEW

MOTOR END VIEW

TYPICAL 6 CYLINDER HERMETIC COMPRESSOR

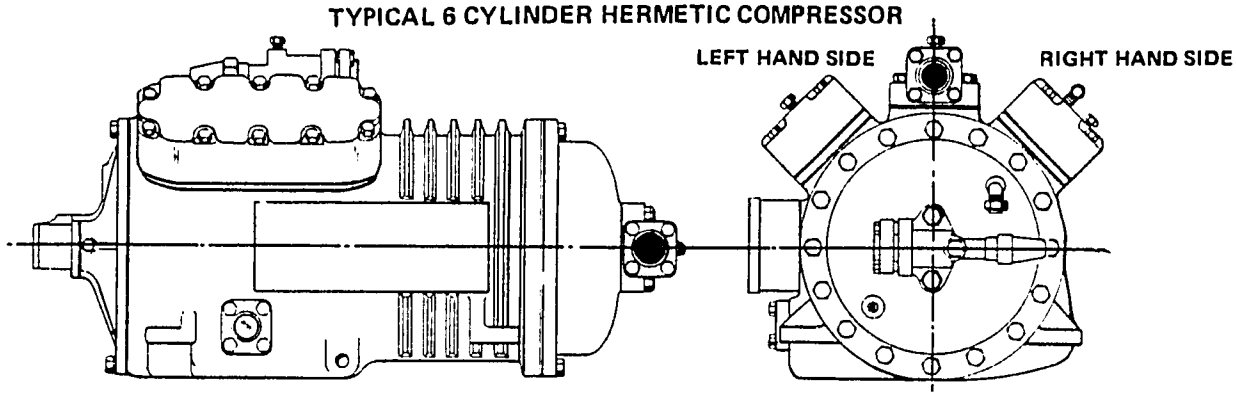

LEFT HAND SIDE VIEW

MOTOR END VIEW

D-LINE DIRECT DRIVE COMPRESSORS—CURRENT PRODUCTION

TYPICAL 2 CYLINDER D-LINE DIRECT DRIVE COMPRESSOR

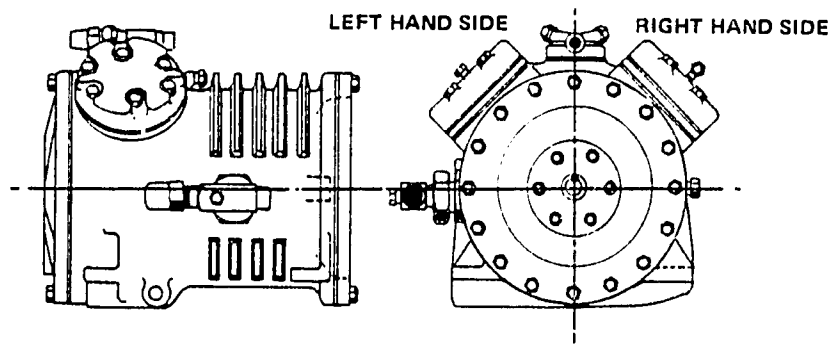

LEFT HAND SIDE VIEW DRIVE END VIEW

TYPICAL 3 AND 4 CYLINDER D-LINE DIRECT DRIVE COMPRESSORS

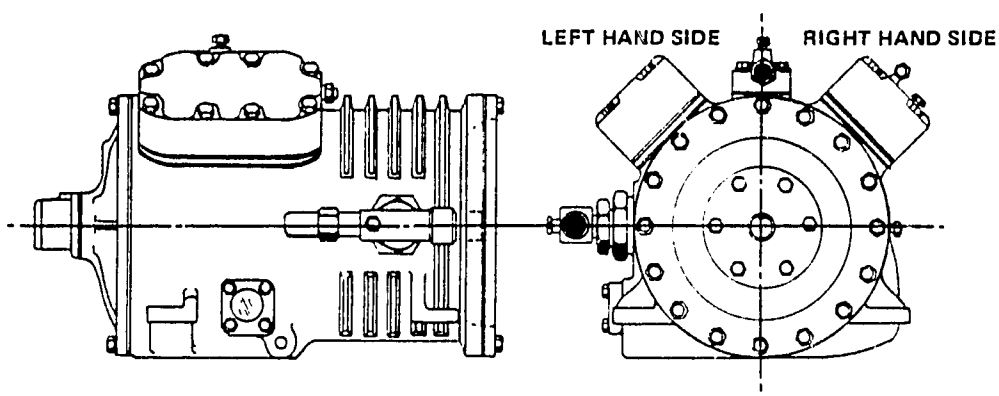

LEFT HAND SIDE VIEW DRIVE END VIEW

TYPICAL 6 CYLINDER D-LINE DIRECT DRIVE COMPRESSOR

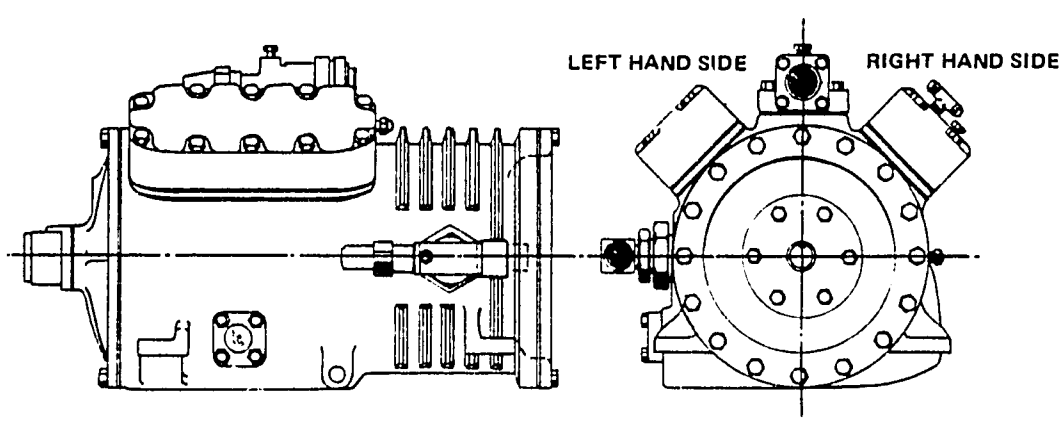

LEFT HAND SIDE VIEW DRIVE END VIEW

EARLY MODEL COMPRESSORS

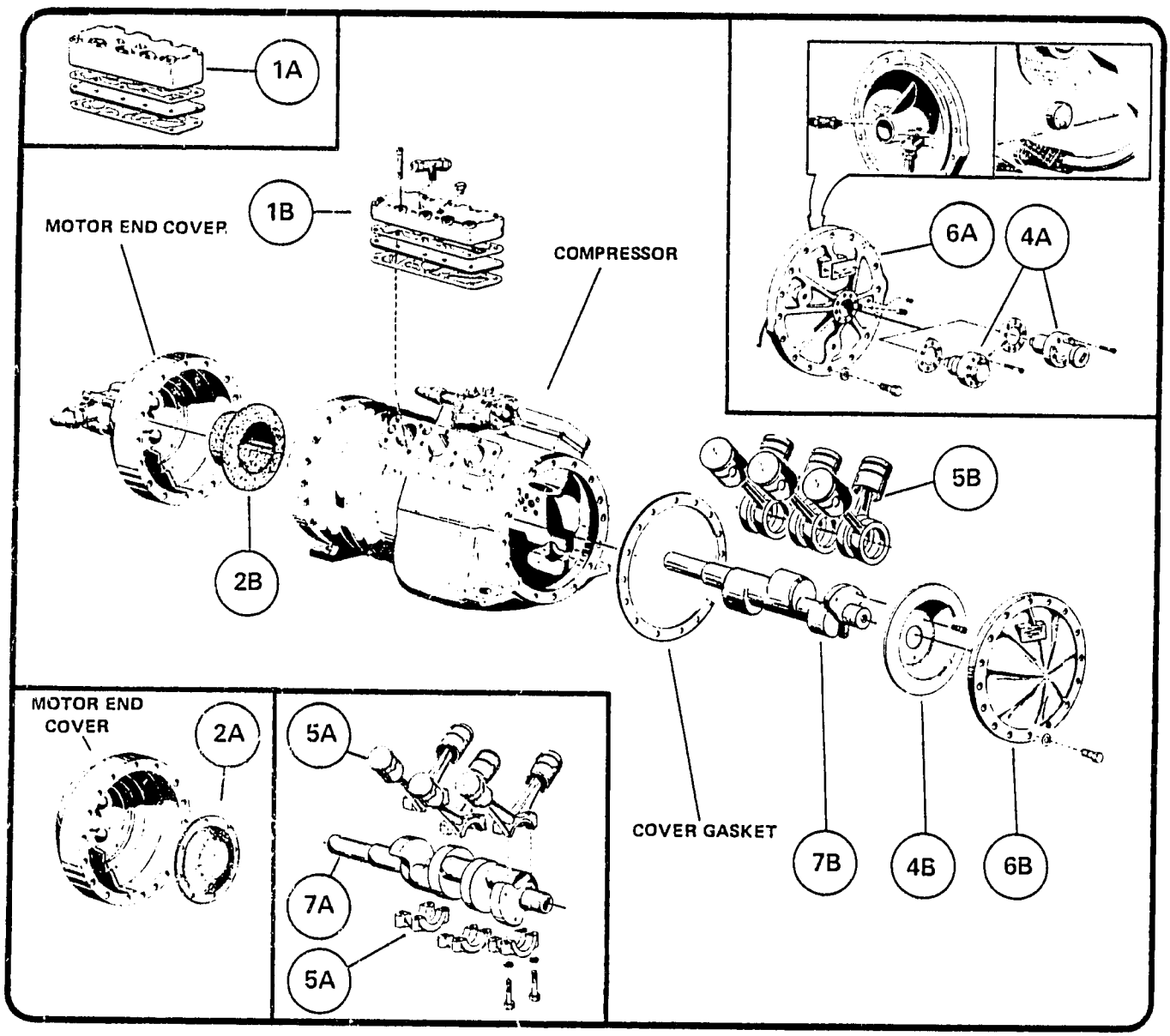

EARLY MODEL DUNHAM-BUSH COMPRESSORS BUILT PRIOR TO 1965 MAY BE UPDATED TO CURRENT DESIGN STANDARDS. REFER TO THE ILLUSTRATION ABOVE AND TEXT BELOW FOR CHANGES ON 3 CYLINDER, 4 CYLINDER AND 6 CYLINDER MODELS.

MUFFLER HEADS – New style muffler heads (1A) may be used to replace the low silhouette heads (1B). When ordering the new heads be sure to order screws to fit. (D/B part No. 012P27-3" long 3/8-16 grade 5 capscrews).

SUCTION FILTER – A derby shaped suction filter (2B) is available to replace old style suction screens found in compressors built prior to 1965. Installation of these filters require some surfaces of the housing to be remachined. Present filter, item (2A), cannot fit pre-1965 compressors. Consult factory.

OIL PUMPS – Oil pumps were not available for compressors built prior to 1965. To update these compressors to current design standards it is necessary to replace housing (6B) and slinger (4B) with motor cover (6A) and pump (4A). These items may be ordered as a kit. (See section IV, Parts Kit)

PISTONS AND CRANKSHAFTS – Pre-1965 4/6 cylinder compressors used strap-type rods (5B) and an eccentric crankshaft (7B). Straps are available, crankshafts are not. However, current design crankshafts (7A) and 2 piece rods (5A) fit pre-1965 crank cases. Orders for parts should be taken from the appropriate listings in this catalog.

COMPARABLE DISPLACEMENTS OF NEW VS. OLD D-LINE MODELS

NOTE: COMPRESSORS WITHIN THE SAME CODE GROUP ARE PHYSICALLY IDENTICAL. MOUNTING DIMENSIONS WILL VARY FROM OLD AND NEW MODELS. ALL MODELS NOT FOUND ON CHART MAY BE DIRECTLY REPLACED WITH THE SAME MODEL, EXCEPT THE MODELS NOTED IN EXHIBIT "A". TO ORDER A REPLACEMENT BE SURE TO SPECIFY MODEL PLUS CODE AS SHOWN IN TABLE BELOW. LIST PRICES CAN BE FOUND IN THE LATEST EDITION OF FORM 4650-2.

4 AND 6 CYLINDER 60 HZ

OLD MODELS			APPLICATION		NEW MODELS		
CODE†	DISPLACEMENT (CFH)	OLD MODEL	←	→	NEW MODEL	DISPLACEMENT (CFH)	CODE†
6E	2412	200 DPHF	R-22 R-502	HF	201 DPHF	2500	6MP
		150 DPCF		CF	201 DPCF		
		–		LF	–		
		100 DPELF		ELF	101 DPELF		
		100 DPH	R-12	H	101 DPH		
		–		C	101 DPC		
		75 DPL		L	76 DPL		
		–		EL	–		
6D	2034	150 DPHF	R-22 R 502	HF	151 DPHF	2000	4FP
		–		CF	151 DPCF		
		–		LF	–		
		75 DPELF		ELF	77 DPELF		
		–	R-12	H	–		
		75 DPC		C	77 DPC		
		–		L	–		
		50 DPEL		EL	51 DPEL*		
6C	1698	–	R-22 R-502	HF	111 DPHF	1680	4MP
		100 DPCF		CF	111 DPCF		
		75 DLF		LF	–		
		–		ELF	76 DPLF		
		75 DH	R-12	H	76 DPH		
		–		C	76 DPC		
		50 DL		L	51 DPL		
		–		EL	–		

4 AND 6 CYLINDER 50 HZ

OLD MODELS			APPLICATION		NEW MODELS		
CODE†	DISPLACEMENT (CFH)	OLD MODEL	←	→	NEW MODEL	DISPLACEMENT (CFH)	CODE†
6E	2010	150 DPHF5	R-22 R-502	HF	151 DPHF5	2083	6MP
		–		CF	151 DPCF5		
		–		LF	–		
		75 DPELF5		ELF	77 DPELF5		
		–	R-12	H	77 DPH5		
		–		C	77 DPC5		
		75 DPL5		L	–		
		50 DPEL5		EL	61 DPL5		
6D	1698	–	R-22 R-502	HF	111 DPHF5	1667	4FP
		100 DPCF5		CF	111 DPCF5		
		75 DPLF5		LF	–		
		–		ELF	62 DPELF5		
		75 DPH5	R-12	H	76 DPH5*		
		–		C	62 DPC5		
		50 DPL5		L	51 DPL5*		
		–		EL	–		
6C	1410	100 DPHF5	R-22 R-502	HF	101 DPHF5	1400	4MP
		75 DCF5		CF	101 DPCF5		
		–		LF	–		
		50 DELF5		ELF	51 DPLF5		
		–	R-12	H	51 DPH5		
		50 DC5		C	51 DPC5		
		–		L	–		
		30 DEL5		EL	41 DPL5		

*Order as indicated in Exhibit 'A'

EXHIBIT "A"

NOTE: Refer to the latest edition of list price sheet Form 4650-2 for replacement compressors for these models.

60 HZ.	COMPRESSOR BODY CODE †
30DEL	4D**
51DPEL	4FP**
76DPELF	4MP††
101DPCF	4MP††
50 HZ.	
20DL5	3C**
30DH5	3C**
30DL5	4D**
31DPEL5	4MP**
51DPH5	4MP**
51DPL5	4FP**
51DPELF5	4MP††
51DPEL5	6MP**
76DPCF5	4MP††
76DPH5	4FP**
76DPC5	4FP**
76DPELF5	4FP††

NOTE: ** = R-12 and †† = R-22 or R-502

NOTE: † = Code Explanation

The numeral represents the number of cylinders and the letter designates the bore and stroke of the compressor. The "P" indicates pump lubrication.

BORE X STROKE CODE

LETTER =	BORE X STROKE ↓	↓
A	1 13/16	1 1/8
B	1 13/16	1 1/2
C	2	1 1/2
D	2 3/16	1 1/2
E	2 3/16	1 49/64
F	2 3/16	2 3/16
G	1 1/2	7/8
H	1 5/8	7/8
J	1 1/2	1 1/4
K	1 5/8	1 1/4
L	1 5/8	1 9/16
M	2	2 3/16

D/B METIC 2 CYLINDER FRACTIONAL COMPRESSORS
CURRENT PRODUCTION MODELS

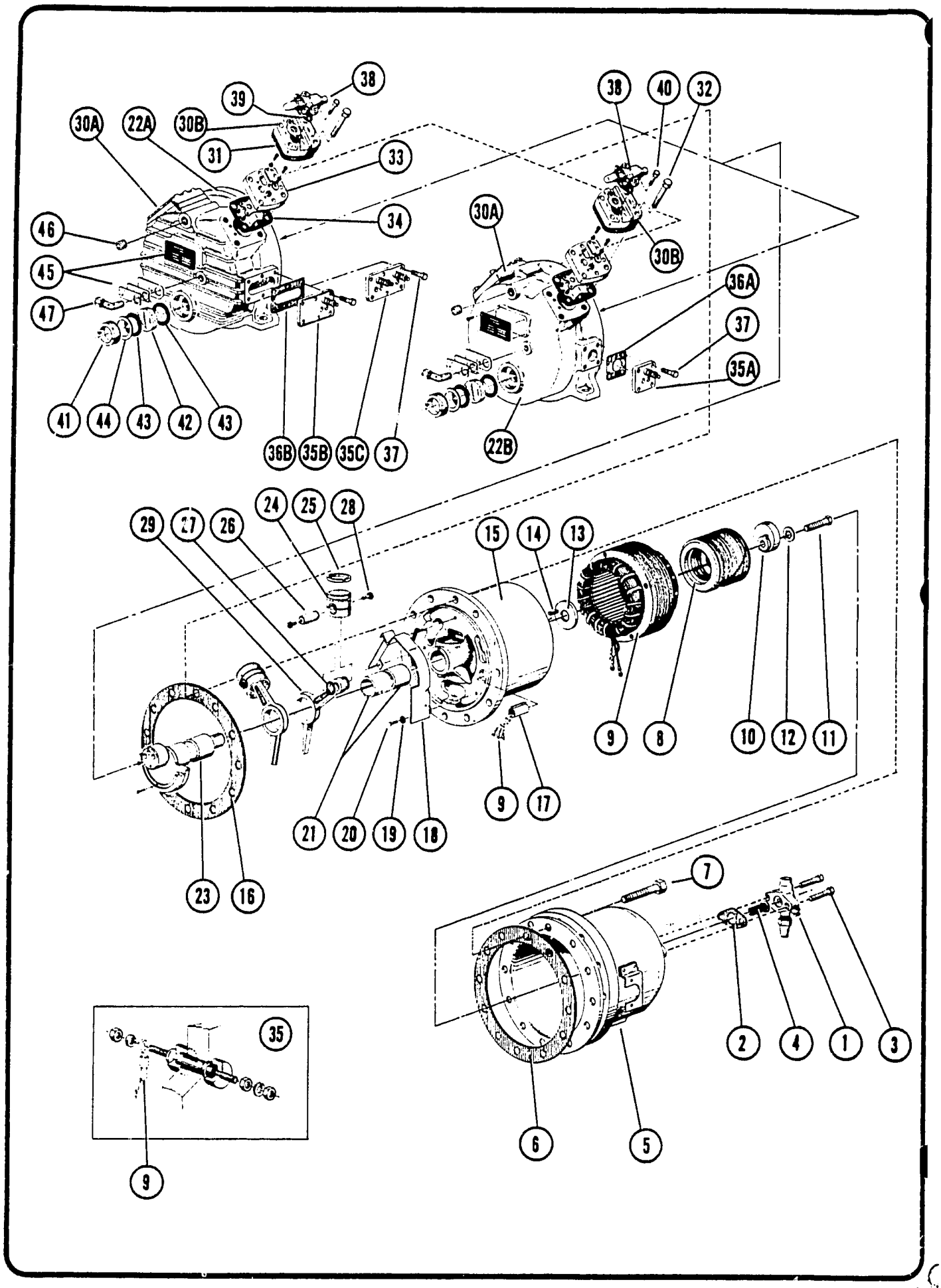

D/B METIC 2 CYLINDER FRACTIONAL COMPRESSORS
CURRENT PRODUCTION MODELS

				60 HZ.				
			SPECIFICATIONS DISPL. (CFH)	188	217	264	311	393
			BORE X STROKE (IN)	1 1/2 x 7/8	1 5/8 x 7/8	1 1/2 x 1 1/4	1 5/8 x 1 1/4	1 5/8 x 1 9/16
			COMP. MODEL	5 HCL	8 HCL ††	9 HCL	10 HCL ††	11 HCL
DESCRIPTION			PART NO.	QUANTITY				
1	Valve, Suction		VAL362	1				
	Service		VAL363		1	1	1	1
2	Gasket, Suction Valve		GKT398	1	1	1	1	1
3	Screw, Suction Valve		011P17	2	2	2	2	2
4	Strainer, Suction		GA109	1	1	1	1	1
5	Housing Assembly, Motor		NC20	1	1	1	1	1
6	Gasket, Housing		NC4	1	1	1	1	1
7	Screw, Housing		011P13	12	12	12	12	12
8	Rotor		–	Consult Factory				
9	Stator		–	Consult Factory				
10	Counterweight, Rotor		GA264	1	1			
			GA179T1			1	1	
			GA179T2					1
11	Screw, Counterweight		012P13	1	1	1	1	1
12	Lockwasher, weight		061P04	1	1	1	1	1
13	Washer, Thrust		GA171	1	1	1	1	1
14	Key, Shaft		NA76	1	1	1	1	1
15	Bearing, Spider		ND4	1	1	1	1	
			GD103					1
16	Gasket, Spider		NC5	1	1	1	1	1
17	Protector, Lead		NA74	1	1	1	1	1
18	Plate, Oil Collector		NC75	1	1	1	1	1
19	Washer, Collector		028P04	3	3	3	3	3
20	Screw, Collector		028P11	3	3	3	3	3
21	Bushing, Spider **		GA166	2	2	2	2	
			GA367					2
22	Crankcase *	A	GD54T3	1				
			GD54T4		1			
		B	GE72T1			1		
			GE72T4				1	
			GE72T5					1
23	Crankshaft		GC268	1				
			GC294		1			
			GC388					1
			GC270			1	1	

				60 HZ.				
			SPECIFICATIONS DISPL. (CFH)	188	217	264	311	393
			BORE X STROKE (IN)	1 1/2 x 7/8	1 5/8 x 7/8	1 1/2 x 1 1/4	1 5/8 x 1 1/4	1 5/8 x 1 9/16
			COMP. MODEL	5 HCL	8 HCL ††	9 HCL	10 HCL ††	11 HCL
DESCRIPTION			PART NO.	QUANTITY				
24	Piston & Pin †		NB11	1		1		
			GB284		1		1	1
25	Ring, Piston		NA27		1		1	1
			GA112	1		1		
26	Pin, Piston *		GA150	1		1		
			GA151		1		1	1
27	Washer, Pin		GA170	4	4	4	4	4
28	Rivet, Pin		0110G05	4		4		
			0110G10		4		4	4
29	Rod, Connecting		GC177	2	2			
			GC178			2	2	
			GC385					2
30	Head, Valve RH	A	HD34	1	1	1	1	1
	Head, Valve LH	B	GB280	1	1	1	1	1
31	Gasket, Head		NB3	2	2	2	2	2
32	Screw, Head		011P15	8	8	8	8	8
33	Valve Plate Assembly		GB160	2	2	2	2	2
34	Gasket, Valve Plate		NB4	2	2	2	2	2
35	Terminal Plate Assembly	A	NB15	Qty. Will Vary With Voltage and Ø See Pg.49 for Information				
		B	GB282					
		C	GB283					
36	Gasket, Term. Plate	A	NA8	1	1			
		B	GA369			1	1	1
37	Screw Term. Plate		011P10	4	4	6	6	6
38	Valve, Discharge Serv.		VAL361	1	1	1	1	1
39	Gasket, Disch. Valve		GA1370	1	1	1	1	1
40	Screw, Disch. Valve		011P13	2	2	2	2	2
41	Retainer, Sight Glass		GA211	1	1	1	1	1
42	Sight Glass		GA210	1	1	1	1	1
43	Gasket, Sight Glass		GA213	2	2	2	2	2
44	Ring, Friction		GA212	1	1	1	1	1
45	Identification Tags		—	4	4	4	4	4
46	Plug		055P71	1	1	1	1	1
47	Elbow		072P02	1	1	1	1	1

**Field replacement of bearings require line boring. Refer to National Service Bulletin SR116.
*Not available as separate item.
Note: Single phase models are designated "CL"
† Includes Piston, Piston Pin and Pin Rivets
†† Deleted from current production at time of publication.

D/B METIC 2 CYLINDER INTEGRAL HERMETIC COMPRESSORS
CURRENT PRODUCTION MODELS

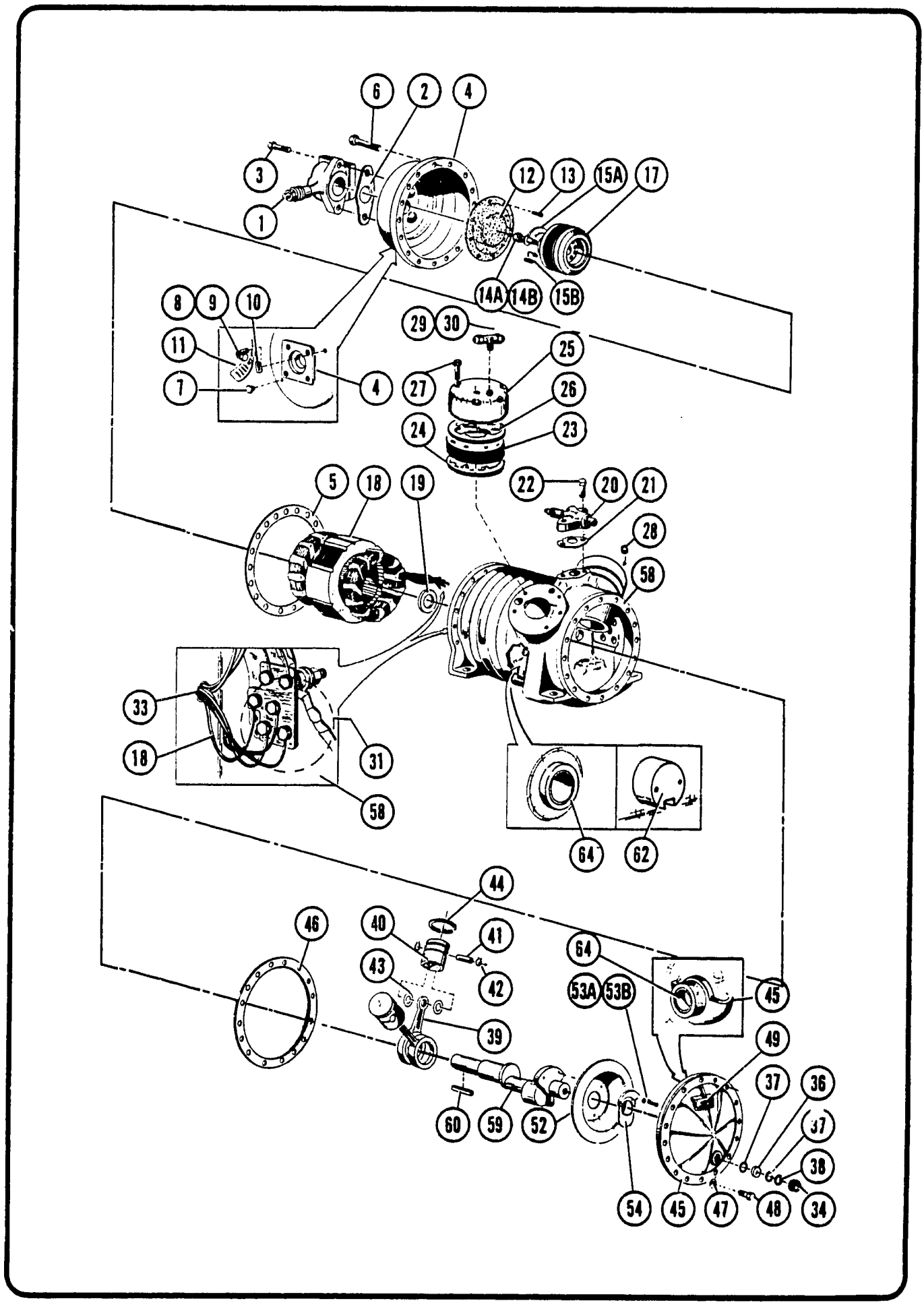

D/B METIC 2 CYLINDER INTEGRAL HERMETIC COMPRESSORS
CURRENT PRODUCTION MODELS

				60 HZ.											50 HZ.										
			SPECIFICATIONS DISPL. (CFH)	348		465			566			677		806	290		388		472			564			673	
			BORE X STROKE (IN)	$1\frac{13}{16} \times 1\frac{1}{8}$		$1\frac{13}{16} \times 1\frac{1}{2}$			$2 \times 1\frac{1}{2}$			$2\frac{3}{16} \times 1\frac{1}{2}$		$2\frac{3}{16} \times 1\frac{49}{64}$	$1\frac{13}{16} \times 1\frac{1}{8}$		$1\frac{13}{16} \times 1\frac{1}{2}$		$2 \times 1\frac{1}{2}$			$2\frac{3}{16} \times 1\frac{1}{2}$			$2\frac{3}{16} \times 1\frac{49}{64}$	
			COMPRESSOR MODEL	15H/CF/LF	20HF	15C/ELF	20H/CF/LF	30HF	15L	20C/ELF	30CF	20L	30H/LF	32C/ELF	15HF5	15H5/CF5/LF5	20HF5	15C5/ELF5	20H5/CF5/LF5	30HF5	15L5	20C5/ELF5	30CF5	22L5	32H5/LF5
	DESCRIPTION		PART NO	QUANTITY PER MODEL																					
1	Valve, Suction Service		VAL373					1			1		1	1			1		1			1		1	1
			VAL615	1	1	1	1		1	1		1			1	1		1		1	1		1		
2	Gasket, Suction Service Valve		GKT340					1			1		1	1			1		1	1		1		1	1
			GKT398	1	1	1	1		1	1		1			1	1		1			1		1		
3	Screw, Suction Service Valve		011P17	2	2	2	2		2	2		2			2	2		2			2		2		
			014P17					2			2		2	2			2		2	2		2		2	2
4	Cover, Motor End		COV56	1	1	1	1		1	1		1			1	1		1			1		1		
			COV58					1			1		1	1			1		1	1		1		1	1
5	Gasket, End Cover		GA1011	1	1	1	1	1	1	1	1	1	1	1	1	1	1	1	1	1	1	1	1	1	1
6	Screw, End Cover		011P13	16	16	16	16	16	16	16	16	16	16	16	16	16	16	16	16	16	16	16	16	16	16
7	Plug, End Cover		055P71	1	1	1	1	1	1	1	1	1	1	1	1	1	1	1	1	1	1	1	1	1	1
8	Elbow, End Cover		072P01	1	1	1	1	1	1	1	1	1	1	1	1	1	1	1	1	1	1	1	1	1	1
9	Cap, Elbow		0212P02	2	2	2	2	2	2	2	2	2	2	2	2	2	2	2	2	2	2	2	2	2	2
10	Tag I.D.		—	1	1	1	1	1	1	1	1	1	1	1	1	1	1	1	1	1	1	1	1	1	1
11	Tag I.D.		—	1	1	1	1	1	1	1	1	1	1	1	1	1	1	1	1	1	1	1	1	1	1
12	Filter, Suction		FLR16	1	1	1	1	1	1	1	1	1	1	1	1	1	1	1	1	1	1	1	1	1	1
13	Screw, Filter		SCR69	4	4	4	4	4	4	4	4	4	4	4	4	4	4	4	4	4	4	4	4	4	4
14	Lockwasher	A	012P215	1	1	1	1	1	1	1	1	1	1	1	1	1	1	1	1	1	1	1	1	1	1
	Screw	B	012P19	1	1	1	1	1	1	1	1	1	1	1	1	1	1	1	1	1	1	1	1	1	1
15	Counterweight, Rotor	A	GA1021								1		1						1	1		1			
			GA1049	1	1										1										
			GA1050			1	1	1	1	1		1				1	1	1			1		1		
			GA1289											1										1	1
	Counterweight Pin	B	0102G27	1	1	1	1	1	1	1	1	1	1	1	1	1	1	1	1	1	1	1	1	1	1
17	Rotor		—	CONSULT FACTORY																					
18	Stator		—	CONSULT FACTORY																					
19	Washer, Outer Thrust		GA1017	1	1	1	1	1	1	1	1	1	1	1	1	1	1	1	1	1	1	1	1	1	1
20	Valve, Discharge Service		VAL363	1	1	1	1	1	1	1	1	1	1	1	1	1	1	1	1	1	1	1	1	1	1
21	Gasket, Discharge Valve		GKT398	1	1	1	1	1	1	1	1	1	1	1	1	1	1	1	1	1	1	1	1	1	1
22	Screw, Discharge Valve		011P17	2	2	2	2	2	2	2	2	2	2	2	2	2	2	2	2	2	2	2	2	2	2
23	Valve Plate Assembly		GB1042	(2) ALL MODELS - SEE PAGE 45																					
24	Gasket Valve Plate (See Page 46)		GKT370	2	2	2	2	2							2	2	2								
			GKT371						2	2	2							2	2	2					
			GKT372									2	2	2							2	2	2	2	2
25	Head, Valve RH		GC1003	1	1	1	1	1	1	1	1	1	1	1	1	1	1	1	1	1	1	1	1	1	1
	Head, Valve LH		GC1007	1	1	1	1	1	1	1	1	1	1	1	1	1	1	1	1	1	1	1	1	1	1
26	Gasket, Head		GKT343	2	2	2	2	2	2	2	2	2	2	2	2	2	2	2	2	2	2	2	2	2	2
27	Screw, Head		011P17	12	12	12	12	12	12	12	12	12	12	12	12	12	12	12	12	12	12	12	12	12	12
28	Plug, Head		055P80	1	1	1	1	1	1	1	1	1	1	1	1	1	1	1	1	1	1	1	1	1	1
29*	Tee, Head		GA1612	1	1	1	1	1	1	1	1	1	1	1	1	1	1	1	1	1	1	1	1	1	1
30	Cap, Tee		0212P02	2	2	2	2	2	2	2	2	2	2	2	2	2	2	2	2	2	2	2	2	2	2
31	Terminal Post Assembly		—	QUANTITIES WILL VARY WITH 1ϕ, 3ϕ 230/208/460/575 MOTORS FOR KIT INFORMATION SEE PAGE 49																					

D/B METIC 2 CYLINDER INTEGRAL HERMETIC COMPRESSORS
CURRENT PRODUCTION MODELS CONTINUED

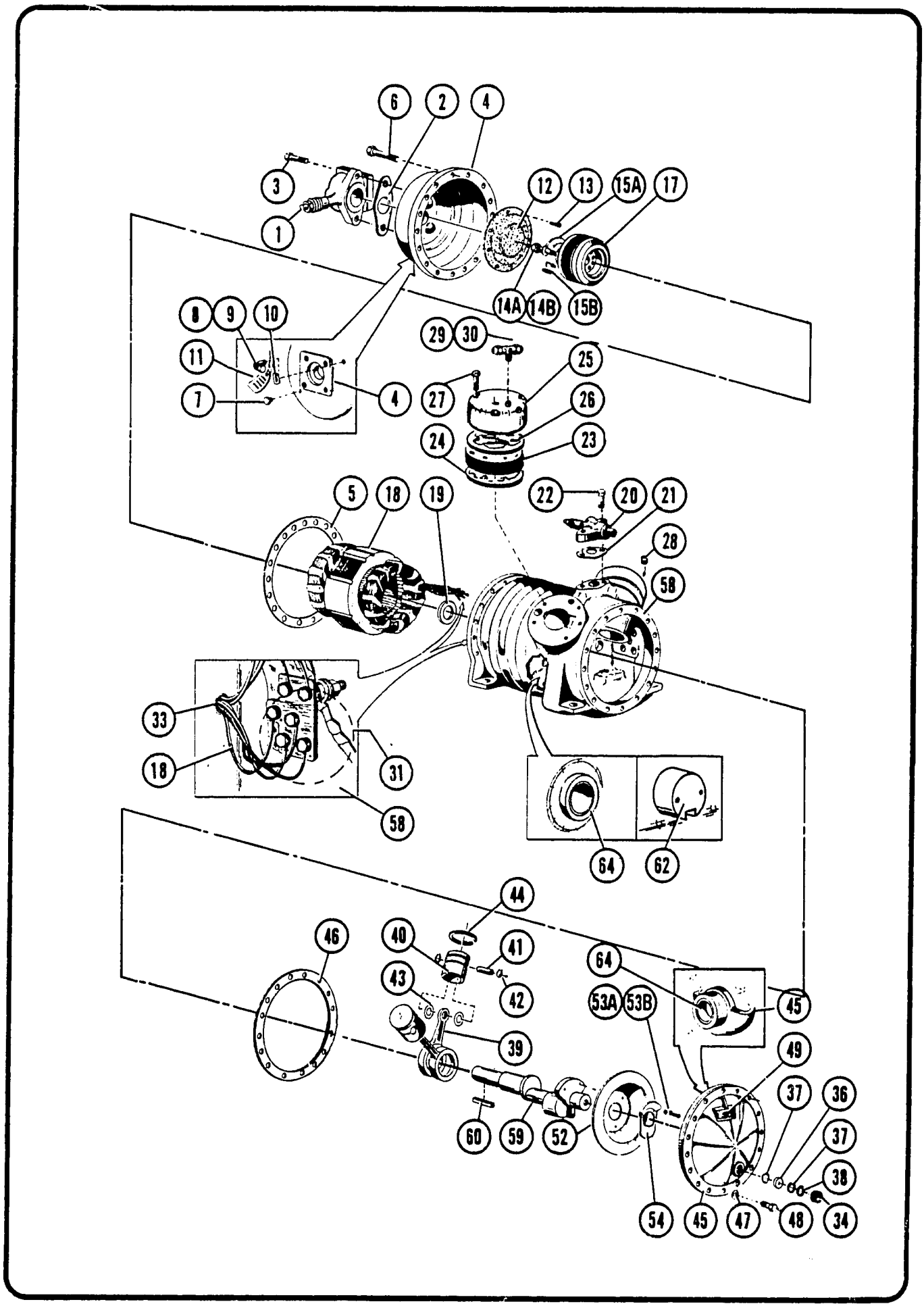

D/B METIC 2 CYLINDER INTEGRAL HERMETIC COMPRESSORS
CURRENT PRODUCTION MODELS CONTINUED

				60 HZ.											50 HZ.										
			SPECIFICATIONS DISPL. (CFH)	348		465			566			677		806	290		388	472			564			673	
			BORE X STROKE (IN)	$1\frac{13}{16} \times 1\frac{1}{8}$		$1\frac{13}{16} \times 1\frac{1}{2}$			$2 \times 1\frac{1}{2}$			$2\frac{3}{16} \times 1\frac{1}{2}$		$2\frac{3}{16} \times 1\frac{49}{64}$	$1\frac{13}{16} \times 1\frac{1}{8}$		$1\frac{13}{16} \times 1\frac{1}{2}$	$2 \times 1\frac{1}{2}$			$2\frac{3}{16} \times 1\frac{1}{2}$			$2\frac{3}{16} \times 1\frac{49}{64}$	
			COMPRESSOR MODEL	15H/CF/LF	20HF	15C/ELF	20H/CF/LF	30HF	15L	20C/ELF	30CF	20L	30H/LF	32C/ELF	15HF5	15H5/CF5/LF5	20HF5	15C5/ELF5	20H5/CF5/LF5	30HF5	15L5	20C5/ELF5	30CF5	22L5	32H5/LF5
	DESCRIPTION		PART NO.	QUANTITY PER MODEL																					
33	Bushing		BUS39	1	1	1	1	1	1	1	1	1	1	1	1	1	1	1	1	1	1	1	1	1	1
34	Retainer, Sight Glass		GA211	1	1	1	1	1	1	1	1	1	1	1	1	1	1	1	1	1	1	1	1	1	1
36	Sight Glass		GA210	1	1	1	1	1	1	1	1	1	1	1	1	1	1	1	1	1	1	1	1	1	1
37	Gasket, Sight Glass		GA213	2	2	2	2	2	2	2	2	2	2	2	2	2	2	2	2	2	2	2	2	2	2
38	Ring, Friction		GA212	1	1	1	1	1	1	1	1	1	1	1	1	1	1	1	1	1	1	1	1	1	1
39	Rod Connecting		GA1000	2	2	2	2	2	2	2	2	2	2		2	2	2	2	2	2	2	2	2		
			ROD50											2										2	2
40	Piston & Pin		GB1001									2	2	2							2	2	2	2	2
			GB1002	2	2	2	2	2							2	2	2								
			GB1003						2	2	2							2	2	2					
41	Pin, Piston **		PIN39	2	2	2	2	2							2	2	2								
			PIN40						2	2	2							2	2	2					
			PIN41									2	2	2							2	2	2	2	2
42	Retainer, Pin		0580P11	4	4	4	4	4	4	4	4	4	4	4	4	4	4	4	4	4	4	4	4	4	4
43	Washer, Piston		GA1013	4	4	4	4	4	4	4	4	4	4	4	4	4	4	4	4	4	4	4	4	4	4
44	Ring, Piston		GA1014									2	2	2							2	2	2	2	2
			GA1026						2	2	2							2	2	2					
			GA1027	2	2	2	2	2							2	2	2								
45	Cover, End		GD1001	1	1	1	1	1	1	1	1	1	1	1	1	1	1	1	1	1	1	1	1	1	1
46	Gasket, End Cover		GA1011	1	1	1	1	1	1	1	1	1	1	1	1	1	1	1	1	1	1	1	1	1	1
47	Seal		GKT341	1	1	1	1	1	1	1	1	1	1	1	1	1	1	1	1	1	1	1	1	1	1
48	Screw, End Cover		011P13	16	16	16	16	16	16	16	16	16	16	16	16	16	16	16	16	16	16	16	16	16	16
49	I.D. Tag		—	1	1	1	1	1	1	1	1	1	1	1	1	1	1	1	1	1	1	1	1	1	1
52	Slinger, Oil		FWH16											1										1	1
			GB1000	1	1	1	1	1	1	1	1	1	1		1	1	1	1	1	1	1	1	1		
53	Slinger, Screw	A	SCR30	1	1	1	1	1	1	1	1	1	1	1	1	1	1	1	1	1	1	1	1	1	1
			SCR31	2	2	2	2	2	2	2	2	2	2	2	2	2	2	2	2	2	2	2	2	2	2
	Lock Washer	B	010P01	3	3	3	3	3	3	3	3	3	3	3	3	3	3	3	3	3	3	3	3	3	3
54	Counterweight, Slinger		GA1177	1	1										1										
			GA1178			1	1	1								1	1								
			GA1179						1	1	1	1	1					1	1	1	1	1	1		
58	Crankcase **		CCS42T1	1	1										1										
			CCS42T2			1	1									1									
			CCS42T3						1	1								1					1		
			CCS42T4									1									1				
			CCS43T1					1									1								
			CCS43T2								1								1	1		1		1	1
			CCS43T3										1	1											
59	Crankshaft		CKS52											1										1	1
			GC1000			1	1	1	1	1	1	1	1			1	1	1	1	1	1	1	1		
			GC1001	1	1										1										
60	Key, Shaft		GA1029	1	1	1	1	1	1	1	1	1	1	1	1	1	1	1	1	1	1	1	1	1	1
62	Valve, Foam Control		VAL496	1	1	1	1	1	1	1	1	1	1		1	1	1	1	1	1	1	1	1	1	1
64	Bearing *		GA1037	1	1	1	1	1	1	1	1	1	1	1	1	1	1	1	1	1	1	1	1	1	1
			GA1038	1	1	1	1	1	1	1	1	1	1	1	1	1	1	1	1	1	1	1	1	1	1

* Field replacement of bearings require line boring. Refer to National Service Bulletin SR116.
** Not available as separate item.

D/B METIC 3 AND 4 CYLINDER HERMETIC COMPRESSORS
CURRENT PRODUCTION MODELS

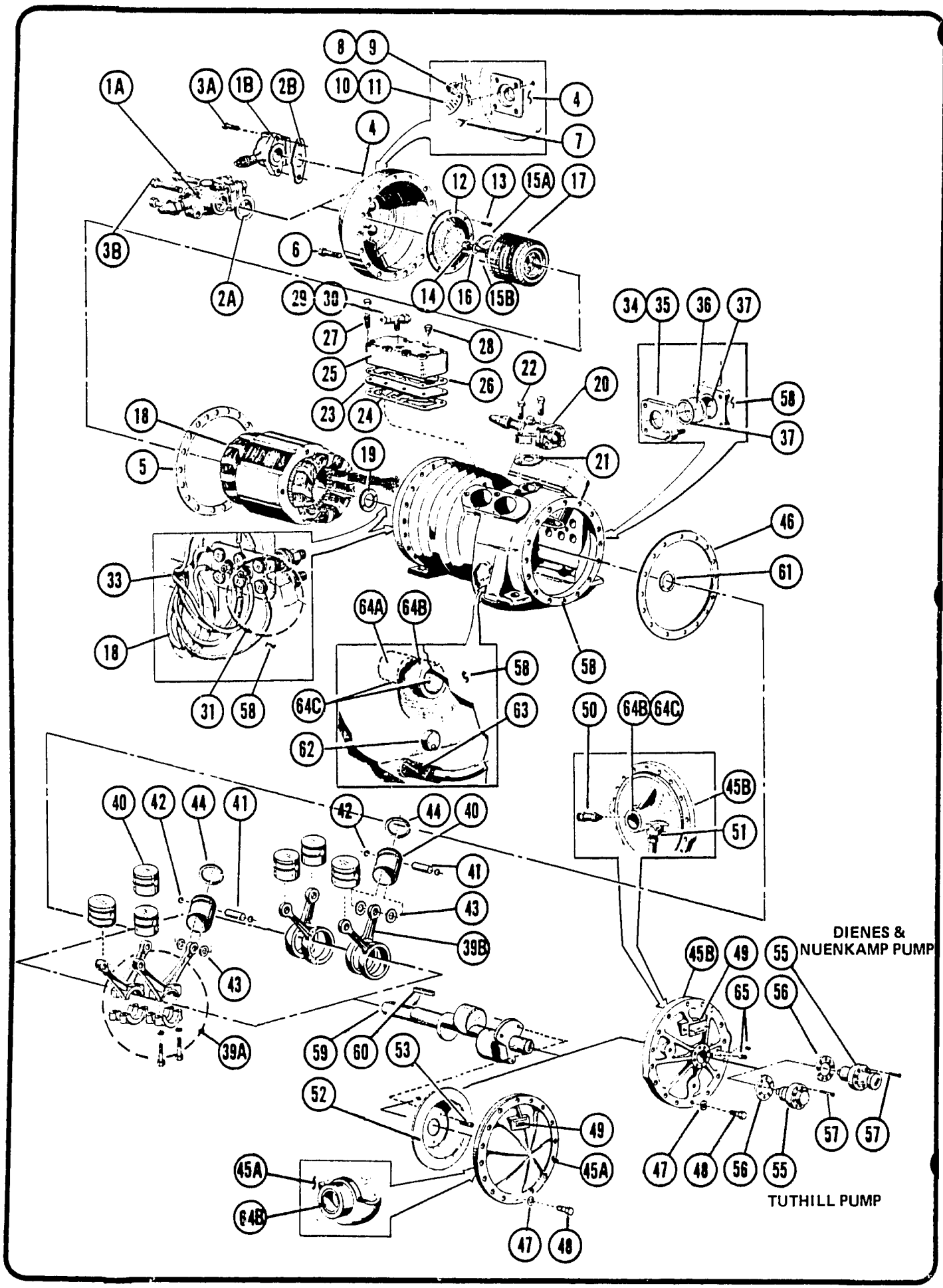

D/B METIC 3 AND 4 CYLINDER HERMETIC COMPRESSORS
CURRENT PRODUCTION MODELS

				60 HZ.															50 HZ.										
			SPECIFICATIONS DISPL. (CFH)	846	930		1128			1356			1680			2000			846	940		1128			1400			1667	
			BORE X STROKE (IN)	2 x 1 1/2	1 13/16 x 1 1/2		2 x 1 1/2			2 3/16 x 1 1/2			2 x 2 3/16			2 3/16 x 2 3/16			2 3/16 x 1 1/2	2 x 1 1/2		2 3/16 x 1 1/2			2 x 2 3/16				2 3/16 x 2 3/16	
			COMP. MODEL	52HF †	30C/ELF	50CF	30L	50H/LF	75HF	50C/ELF	75CF	100PHF	51PL	76PH/C/LF	111PHF/CF	77PC/ELF	151PHF/CF	52HF5 †	30C5/ELF5	50CF5	30L5	50H5/LF5	75HF5	41PL5	51PH5/C5/LF5	101PHF5/CF5	62PC5/ELF5	111PH5/CF5
DESCRIPTION			PART NO.	QUANTITY PER MODEL																									
1	Valve, Suction Service	A	VAL59											1	1	1	1								1	1	1	1
		B	VAL373		1		1																					
			VAL374	1		1		1	1	1	1	1	1					1	1	1	1	1	1	1				
2	Gasket, Suction Service Valve	A	GKT62											1	1	1	1								1	1	1	1
		B	GKT340	1	1	1	1	1	1	1	1	1	1					1	1	1	1	1	1	1				
3	Screw, Suction Service Valve	A	014P17	2	2	2	2	2	2	2	2	2	2					2	2	2	2	2	2	2				
		B	014P29											4	4	4	4								4	4	4	4
4	Cover, Motor End		COV59		1		1																					
			COV60	1		1		1	1	1	1	1	1					1	1	1	1	1	1	1				
			COV61											1		1									1		1	
			COV62												1		1									1		1
5	Gasket, End Cover		GA1209	1	1	1	1	1	1	1	1	1	1	1	1	1	1	1	1	1	1	1	1	1	1	1	1	1
6	Screw, End Cover		012P13	16	16	16	16	16	16	16	16	16	16	16		16		16	16	16	16	16	16	16	16		16	
			012P27												16		16									16		16
7	Plug, End Cover		055P61	1	1	1	1	1	1	1	1	1	1	1	1	1	1	1	1	1	1	1	1	1		1	1	1
8	Elbow, End Cover		072P01	1	1	1	1	1	1	1	1	1	1	1	1	1	1	1	1	1	1	1	1	1	1	1	1	1
9	Cap, Elbow		0212P02	1	1	1	1	1	1	1	1	1	1	1	1	1	1	1	1	1	1	1	1	1	1	1	1	1
10	Tag I.D.		—	1	1	1	1	1	1	1	1	1	1	1	1	1	1	1	1	1	1	1	1	1	1	1	1	1
11	Tag I.D.		—	2	2	2	2	2	2	2	2	2	2	2	2	2	2	2	2	2	2	2	2	2	2	2	2	2
12	Filter, Suction		FLR16	1	1	1	1	1	1	1	1	1	1	1	1	1	1	1	1	1	1	1	1	1	1	1	1	1
13	Screw, Filter		SCR69	4	4	4	4	4	4	4	4	4	4	8	8	8	8	4	4	4	4	4	4	4	8	8	8	8
14	Lockwasher& Screw		—	1	1	1	1	1	1	1	1	1	1	1	1	1	1	1	1	1	1	1	1	1	1	1	1	1
15	Counterweight	A	GA1289	1	1	1	1	1	1	1	1	1						1	1	1	1	1	1					
	Pin, Rotor Ctw.	B	PIN80T4	1	1	1	1	1	1	1	1	1	1	1	1	1	1	1	1	1	1	1	1	1	1	1	1	1
16	Retainer, Rotor		RTR25										1	1	1	1	1							1	1	1	1	1
17	Rotor		—	CONSULT FACTORY																								
18	Stator		—	CONSULT FACTORY																								
19	Washer, Outer Thrust		GA1968	1	1	1	1	1	1	1	1	1	1	1	1	1	1	1	1	1	1	1	1	1	1	1	1	1
20	Valve, Discharge Service		VAL363		1		1																					
			VAL372										1												1	1	1	1
			VAL373											1	1	1	1							1				
			VAL615	1		1		1	1	1	1	1						1	1	1	1	1	1					
21	Gasket, Discharge Service		GKT340										1	1	1	1	1							1	1	1	1	1
			GKT398	1	1	1	1	1	1	1	1	1						1	1	1	1	1	1					
22	Screw Discharge Valve		011P17										2	2	2	2	2							2	2	2	2	2
			014P17	2	2	2	2	2	2	2	2	2						2	2	2	2	2	2					
23	Valve Plate Assembly		GC1162	(2) ALL MODELS - SEE PAGE 45																								
24	Gasket, Valve Plate See Page 46		GKT373		2	2																						
			GKT374	2			2	2	2				2	2	2				2	2				2	2	2		
			GKT375							2	2	2				2	2	2			2	2	2				2	2
25	Head, Valve - RH Head, Valve - LH		GD1191	1	1	1	1	1	1	1	1	1	1	1	1	1	1	1	1	1	1	1	1	1	1	1	1	1
			GD1192	1	1	1	1	1	1	1	1	1	1	1	1	1	1	1	1	1	1	1	1	1	1	1	1	1
26	Gasket, Head		GB1089	(2) ALL MODELS - SEE PAGE 47																								
27	Screw, Head		012P27	20	20	20	20	20	20	20	20	20	20	20	20	20	20	20	20	20	20	20	20	20	20	20	20	20
28	Plug		055P61	2	2	2	2	2	2	2	2	2	2	2	2	2	2	2	2	2	2	2	2	2	2	2	2	2
29	Tee		GA1612	1	1	1	1	1	1	1	1	1	1	1	1	1	1	1	1	1	1	1	1	1	1	1	1	1
30	Cap		0212P02	2	2	2	2	2	2	2	2	2	2	2	2	2	2	2	2	2	2	2	2	2	2	2	2	2
31	Terminal Post Assembly		—	QUANTITIES WILL VARY WITH 1ϕ, 3ϕ 230/208/460/575V MOTORS FOR KIT INFORMATION SEE PAGE 49																								

† = 3 Cylinder Models

D/B METIC 3 AND 4 CYLINDER HERMETIC COMPRESSORS
CURRENT PRODUCTION MODELS CONTINUED

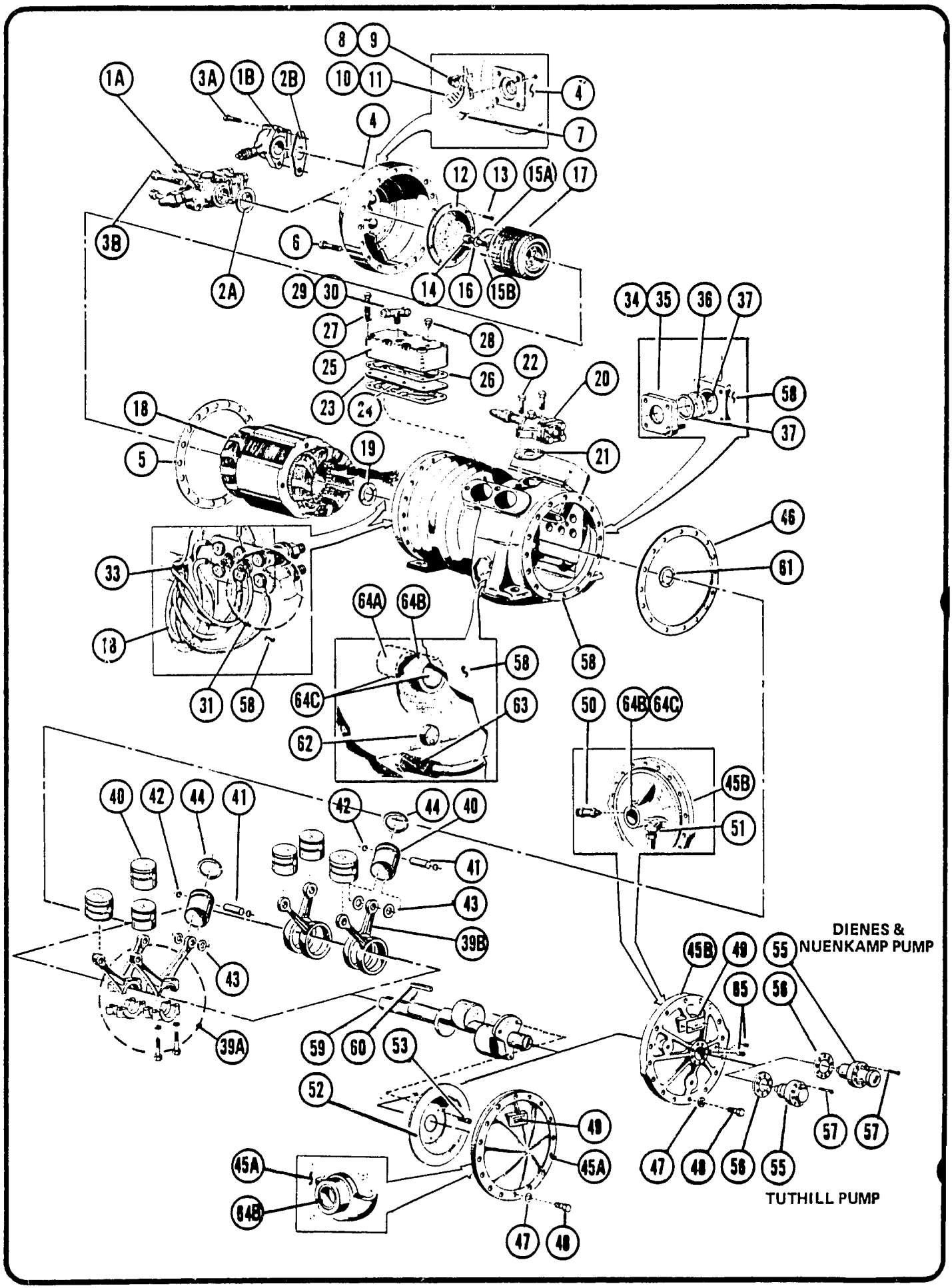

D/B METIC 3 AND 4 CYLINDER HERMETIC COMPRESSORS
CURRENT PRODUCTION MODELS CONTINUED

				60 HZ.														50 HZ.										
			SPECIFICATIONS DISPL. (CFH)	846	930		1128			1356			1680			2000		846	940		1128			1400			1667	
			BORE X STROKE (IN)	2 x 1 1/2	1 13/16 x 1 1/2		2 x 1 1/2			2 3/16 x 1 1/2			2 x 2 3/16			2 3/16 x 2 3/16		2 3/16 x 1 1/2	2 x 1 1/2		2 3/16 x 1 1/2			2 x 2 3/16			2 3/16 x 2 3/16	
			COMP. MODEL	52HF†	30C/ELF	50CF	30L	50H/LF	75HF	50C/ELF	75CF	100PHF	51PL	76PH/C/LF	111PHF/CF	77PC/ELF	151PHF/CF	52HF5†	30C5/ELF5	50CF5	30L5	50H5/LF5	75HF5	41PL5	51PH5/C5/LF5	101PHF5/CF5	62PC5/ELF5	111PH5/CF5
	DESCRIPTION		PART NO.	QUANTITY PER MODEL																								
33	Bushing		BUS39	1	1	1	1	1	1	1	1	1	1	1	1	1	1	1	1	1	1	1	1	1	1	1	1	1
34	Retainer, Sight Glass		GB1091	1	1	1	1	1	1	1	1	1	1	1	1	1	1	1	1	1	1	1	1	1	1	1	1	1
35	Screw, Retainer		011P11	4	4	4	4	4	4	4	4	4	4	4	4	4	4	4	4	4	4	4	4	4	4	4	4	4
36	Sight Glass		GA1228	1	1	1	1	1	1	1	1	1	1	1	1	1	1	1	1	1	1	1	1	1	1	1	1	1
37	Gasket, Sight Glass		GA1233	2	2	2	2	2	2	2	2	2	2	2	2	2	2	2	2	2	2	2	2	2	2	2	2	2
39	Rod, Connecting	A	RUD79										4	4	4	4	4							4	4	4	4	4
		B	GC1156	4	4	4	4	4	4	4	4	4						4	4	4	4	4	4					
40	Piston & Pin		GB1001							4	4	4				4	4	3			4	4	4				4	4
			GB1002		4	4																						
			GB1003	3			4	4	4				4	4	4				4	4				4	4	4		
			GB1368	1																								
			GB1369															1										
41	Pin, Piston**		PIN39		4	4																						
			PIN40	4			4	4	4				4	4	4				4	4				4	4	4		
			PIN41							4	4	4				4	4	4			4	4	4				4	4
42	Retainer, Piston Pin		0580P11	8	8	8	8	8	8	8	8	8	8	8	8	8	8	8	8	8	8	8	8	8	8	8	8	8
43	Washer, Piston		GA1013	8	8	8	8	8	8	8	8	8	8	8	8	8	8	8	8	8	8	8	8	8	8	8	8	8
44	Ring, Piston		GA1014							4	4	4				4	4	4										
			GA1026	4			4	4	4				4	4	4				4	4				4	4	4		
			GA1027		4	4															4	4	4				4	4
45	Cover, End	A	GD1047T1	1	1	1	1	1	1	1	1							1	1	1	1	1						
		B	GD1218T1										1	1	1	1	1							1	1	1	1	1
			GD1218T2									1											1					
46	Gasket, End Cover		GA1209	1	1	1	1	1	1	1	1	1	1	1	1	1	1	1	1	1	1	1	1	1	1	1	1	1
47	Seal, Bolt		GKT342	1	1	1	1	1	1	1	1	1	1	1	1	1	1	1	1	1	1	1	1	1	1	1	1	1
48	Screw, End Cover		012P13	16	16	16	16	16	16	16	16	16	16	16	16	16	16	16	16	16	16	16	16	16	16	16	16	16
49	Tag, I.D.		—	1	1	1	1	1	1	1	1	1	1	1	1	1	1	1	1	1	1	1	1	1	1	1	1	1
50	Valve, Pressure Relief		GA1581									1	1	1	1	1	1							1	1	1	1	1
51	Elbow, Connecting		051P36									1	1	1	1	1	1							1	1	1	1	1
			051P52	1	1	1	1	1	1	1	1							1	1	1	1	1	1					
52	Slinger, Oil		GC1146T1	1	1	1	1	1	1	1	1							1	1	1	1	1	1					
53	Screw, Slinger		SCR30	3	3	3	3	3	3	3	3							3	3	3	3	3	3					
55	Pump, Oil		PMP85A									1	1	1	1	1	1							1	1	1	1	1
56	Gasket, Oil Pump		GKT312									1	1	1	1	1	1							1	1	1	1	1
57	Screw, Oil Pump		034P10									8	8	8	8	8	8							8	8	8	8	8
58	Crankcase**		CCS45T1		1	1																						
			CCS45T2	1			1	1	1										1	1								
			CCS45T4							1	1	1						1			1	1	1					
			CCS45T7													1	1										1	1
			CCS45T8										1	1	1									1	1	1		
59	Crankshaft		CKS56T1										1	1	1	1	1							1	1	1	1	1
			GD1117	1	1	1	1	1	1	1	1	1						1	1	1	1	1	1					
60	Key, Shaft		GA1028										1											1				
			GA1030	1	1	1	1	1	1	1	1	1		1	1	1	1	1	1	1	1	1	1		1	1	1	1
61	Washer, Inner Thrust		GA1966	1	1	1	1	1	1	1	1	1						1	1	1	1	1	1					
			GA1969										1	1	1	1	1							1	1	1	1	1
62	Valve, Foam Control		VAL496	1	1	1	1	1	1	1	1	1	1	1	1	1	1	1	1	1	1	1	1	1	1	1	1	1
63	Strainer, Oil Assem.		GB1381									1	1	1	1	1	1							1	1	1	1	1
64	Bearing*	A	BRG123										1	1	1	1	1							1	1	1	1	1
		B	GA1530										2	2	2	2	2							2	2	2	2	2
		C	GA1554	3	3	3	3	3	3	3	3	3						3	3	3	3	3	3					
65	Plug, End Cover		055P71	2	2	2	2	2	2	2	2	2	2	2	2	2	2	2	2	2	2	2	2	2	2	2	2	2

*Field replacement of bearings require line boring. Refer to National Service Bulletin SR116.
**Not available as separate item.
† = 3 cylinder models

D/B METIC 3 AND 4 CYLINDER HERMETIC COMPRESSORS

OUT OF PRODUCTION MODELS

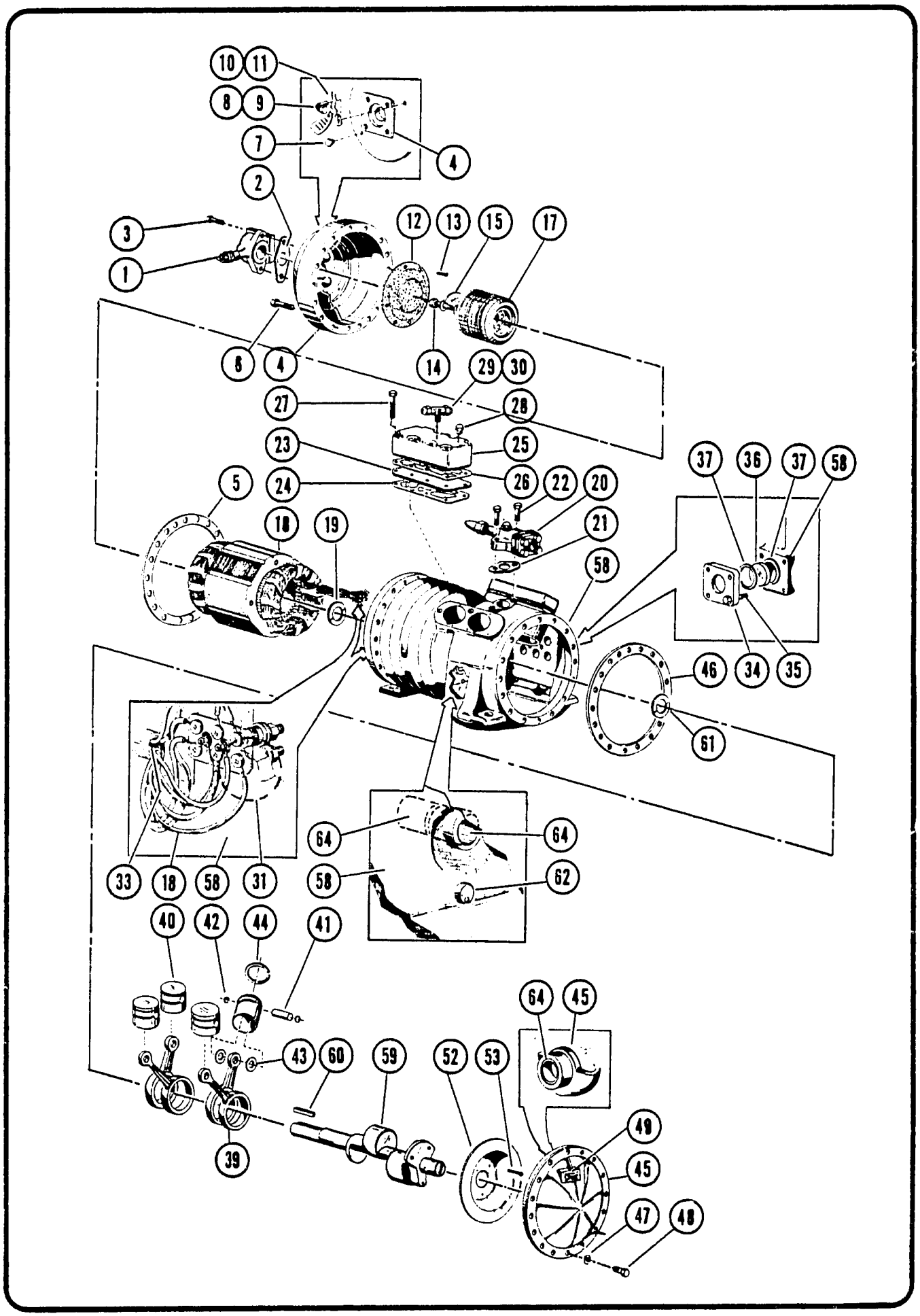

D/B METIC 3 AND 4 CYLINDER HERMETIC COMPRESSORS
OUT OF PRODUCTION MODELS

			60 HZ.		50 HZ.	
		SPECIFICATIONS: DISPL. (CFH)	1356		673	
		SPECIFICATIONS: BORE X STROKE (IN)	$2^3/_{16}$ x $1^1/_2$		2 x $1^1/_2$	
		SPECIFICATIONS: COMP. MODEL	30 EL		20 L5	30 H/LF5
DESCRIPTION		PART NO.	4Cyl		3Cyl	
1	Valve, Suction Service	VAL373	1		1	1
2	Gasket, Suction Valve	GKT340	1		1	1
3	Screw, Suction Valve	014P17	2		2	2
4	Cover, Motor End	COV59	1		1	1
5	Gasket, End Cover	GA1209	1		1	1
6	Screw, End Cover	012P13	16		16	16
7	Plug, End Cover	055P61	1		1	1
8	Elbow, End Cover	072P01	1		1	1
9	Cap, Elbow	0212P02	2		2	2
10	Tag Identification	—	1		1	1
11	Tag Identification	—	1		1	1
12	Filter, Suction	FLR16	1		1	1
13	Screw, Filter	SCR69	4		4	4
14	Lockwasher & Screw	—	1		1	1
15	Counterweight	GA1289	1		1	1
17	Rotor	—	CONSULT FACTORY			
18	Stator	—	CONSULT FACTORY			
19	Washer, Outer Thrust	GA1968	1		1	1
20	Valve, Discharge Service	VAL363	1		1	1
21	Gasket Discharge Valve	GKT398	1		1	1
22	Screw, Discharge Valve	011P17	2		2	2
23	Valve Plate Assembly	GC1162	2		2	2
24	Gasket, Valve Plate	GKT374			2	2
		GKT375	2			
25	Head, Valve RH	GD1191	1		1	1
	Head, Valve LH	GD1192	1		1	1
26	Gasket, Head	GB1089	2		2	2
27	Screw, Head	012P27	20		20	20
28	Plug	055P61	1		1	1
29	Tee	GA1612	1		1	1
30	Cap	0212P02	2		2	2
31	Post, Terminal Assembly	—	Quantities will vary with ϕ and voltage See page 49 for kit information			

			60 HZ.		50 HZ.	
		SPECIFICATIONS: DISPL. (CFH)	1356		673	
		SPECIFICATIONS: BORE X STROKE (IN)	$2^3/_{16}$ x $1^1/_2$		2 x $1^1/_2$	
		SPECIFICATIONS: COMP. MODEL	30 EL		20 L5	30 H/LF5
DESCRIPTION		PART NO.	4Cyl		3Cyl	
33	Bushing	BUS39	1		1	1
34	Retainer, Sight Glass	GB1091	1		1	1
35	Screw, Retainer	011P11	4		4	4
36	Sight Glass	GA1228				
37	Gasket, Sight Glass	GA1233	2		2	2
39	Rod, Connecting	GC1156	4		4	4
40	Piston & Pin	GB1001	4			
		GB1003			3	3
		GB1368			1	1
41	Pin, Piston **	PIN40			4	4
		PIN41	4			
42	Retainer, Piston Pin	0580P11	8		8	8
43	Washer, Piston	GA1013	8		8	8
44	Ring, Piston	GA1014	4			
		GA1026			4	4
45	Cover, End	GD1047T1	1		1	1
46	Gasket, End Cover	GA1209	1		1	1
47	Seal, Bolt	GKT342	1		1	1
48	Screw, End Cover	012P13	16		16	16
49	Identification Tag	—	1		1	1
52	Slinger, Oil	GC1146T1	1		1	1
53	Screw, Slinger	SCR30	3		3	3
58	Crankcase **	CCS45T2			1	1
		CCS45T3	1			
59	Crankshaft	GD1117	1		1	1
60	Key Shaft	KIT369	1		1	1
61	Washer, Inner Thrust	GA1966	1		1	1
62	Valve Foam Control	VAL496	1		1	1
64	Bearing *	GA1554	3		3	3

*Field replacement of bearings require line boring. Refer to National Service Bulletin SR116.
**Not available as separate item.

D/B METIC 6 CYLINDER HERMETIC COMPRESSORS
CURRENT PRODUCTION MODELS

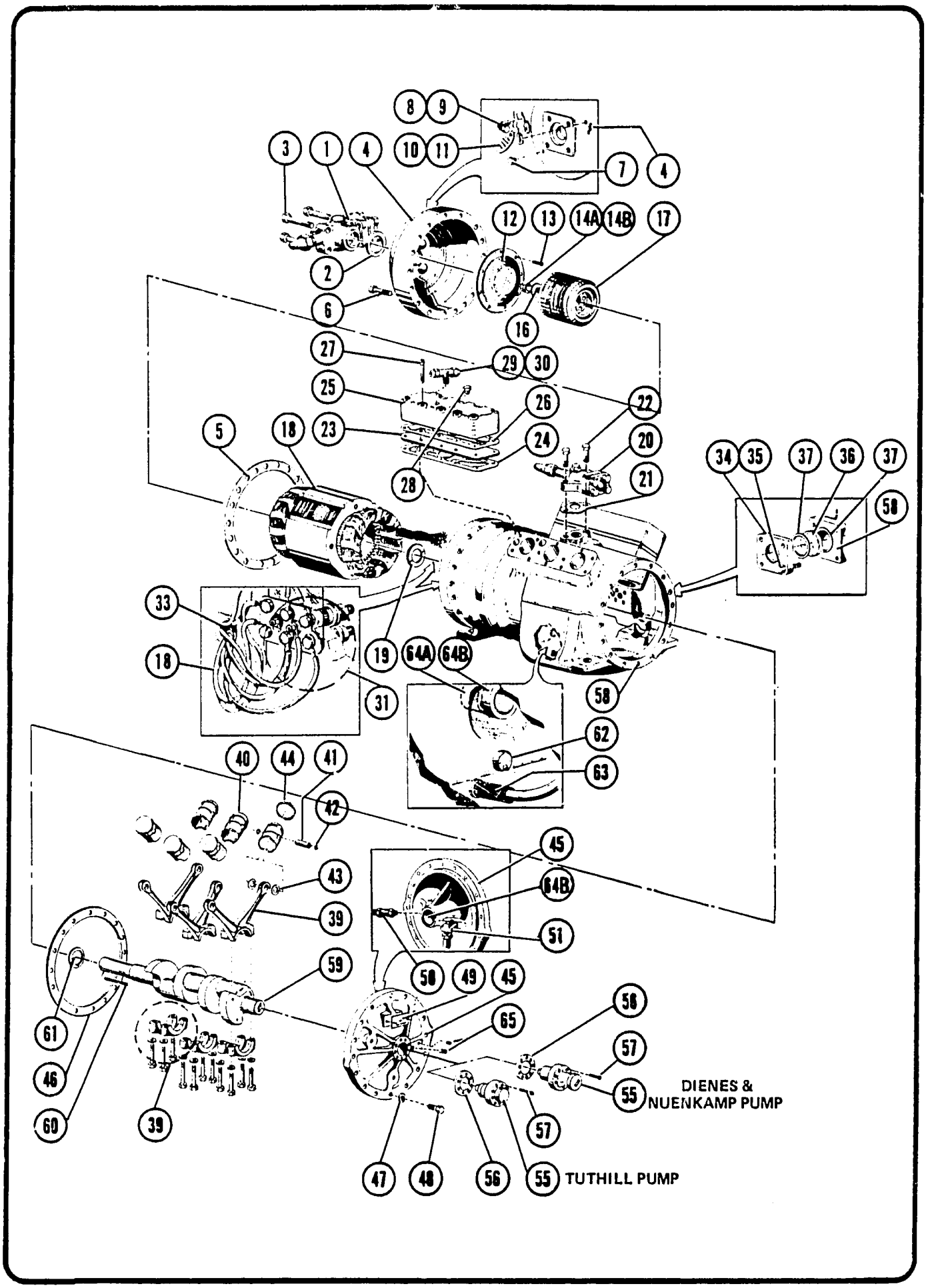

D/B METIC 6 CYLINDER HERMETIC COMPRESSORS
CURRENT PRODUCTION MODELS

				60 HZ.						50 HZ.					
			SPECIFICATIONS DISPL. (CFH)	2500			2997			2083			2500		
			BORE X STROKE	2 x 2 3/16			2 3/16 x 2 3/16			2 x 2 3/16			2 3/16 x 2 3/16		
			COMP. MODEL	76PL	101PH/C/ELF	201PHF/CF	104PL	154PH/C/ELF	204PHF/CF	61PL5	77PH5/C5/ELF5	151PH5/CF5	75PL5	101PH5/C5/ELF5	201PHF5/CF5
	DESCRIPTION		PART NO.	QUANTITY PER MODEL											
1	Valve, Suction Service		VAL59	1	1	1	1	1	1	1	1	1	1	1	1
2	Gasket, Suction Valve		GKT62	1	1	1	1	1	1	1	1	1	1	1	1
3	Screw, Suction Valve		014P29	4	4	4	4	4	4	4	4	4	4	4	4
4	Cover, Motor End		COV61	1						1					
			COV62		1	1	1	1			1	1	1	1	
			COV112						1						1
5	Gasket, End Cover		GA1209	1	1	1	1	1	1	1	1	1	1	1	1
6	Screw, End Cover		012P13	16						16					
			012P23		16	16	16	16			16	16	16	16	
			012P27						16						16
7	Plug, End Cover		055P61	1	1	1	1	1	1	1	1	1	1	1	1
8	Elbow, End Cover		072P01	1	1	1	1	1	1	1	1	1	1	1	1
9	Cap, Elbow		0212P02	2	2	2	2	2	2	2	2	2	2	2	2
10	Tag Identification		—	1	1	1	1	1	1	1	1	1	1	1	1
11	Tag Identification		—	2	2	2	2	2	2	2	2	2	2	2	2
12	Filter, Suction		FLR16	1	1	1	1	1	1	1	1	1	1	1	1
13	Screw, Filter		SCR69	8	8	8	8	8	8	8	8	8	8	8	8
14	Lockwasher	A	012P215	1	1	1	1	1	1	1	1	1	1	1	1
	Screw	B	012P23	1	1	1	1	1	1	1	1	1	1	1	1
16	Retainer, Rotor		RTR25	1	1	1	1	1	1	1	1	1	1	1	1
17	Rotor		—	CONSULT FACTORY											
18	Stator		—	CONSULT FACTORY											
19	Washer, Outer Thrust		GA1968	1	1	1	1	1	1	1	1	1	1	1	1
20	Valve, Discharge Service		VAL373	1	1	1	1	1		1	1	1	1	1	
			VAL374						1						1
21	Gasket, Discharge Valve		GKT340	1	1	1	1	1	1	1	1	1	1	1	1
22	Screw, Discharge Valve		014P17	2	2	2	2	2	2	2	2	2	2	2	2
23	Valve Plate Assembly		PLT2001A	(2) ALL MODELS – SEE PAGE 45											
24	Gasket, Valve Plate		GKT376	(2) ALL MODELS – SEE PAGE 46											
			GKT377												
25	Head, Valve RH		GD1189	1	1	1	1	1	1	1	1	1	1	1	1
	Head, Valve LH		GD1190	1	1	1	1	1	1	1	1	1	1	1	1
26	Gasket, Head		GC1150	(2) ALL MODELS – SEE PAGE 46											
27	Screw, Valve Head		012P27	20	20	20	20	20	20	20	20	20	20	20	20
28	Plug		055P61	1	1	1	1	1	1	1	1	1	1	1	1
29	Tee		GA1612	1	1	1	1	1	1	1	1	1	1	1	1
30	Cap		0212P02	2	2	2	2	2	2	2	2	2	2	2	2
31	Terminal Post Assembly		—	QUANTITIES WILL VARY WITH 1φ, 3φ, 575, 230/208V MOTORS SEE PAGE 49 FOR KIT INFORMATION											

D/B METIC 6 CYLINDER HERMETIC COMPRESSORS
CURRENT PRODUCTION MODELS CONTINUED

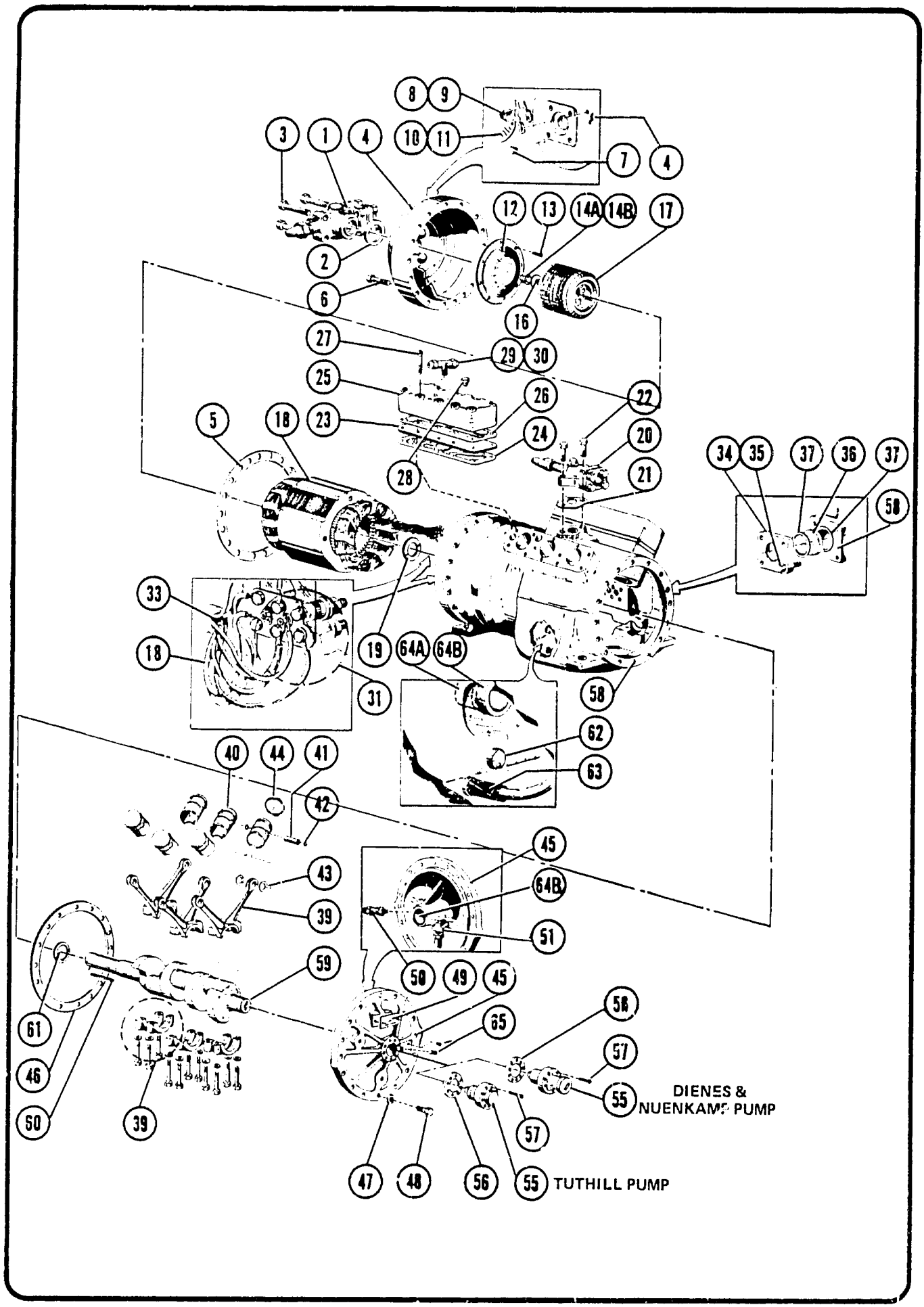

D/B METIC 6 CYLINDER HERMETIC COMPRESSORS
CURRENT PRODUCTION MODELS CONTINUED

			SPECIFICATIONS	60 HZ.						50 HZ.					
			DISPL. (CFH)	2500			2997			2083			2500		
			BORE X STROKE (IN.)	2 x 2 3/16			2 3/16 x 2 3/16			2 x 2 3/16			2 3/16 x 2 3/16		
			COMP. MODEL	76PL	101PH/C/ELF	201PHF/CF	104PL	154PH/C/ELF	204PHF/CF	61PL5	77PH5/C5/ELF5	151PH5/CF5	75PL5	101PH5/C5/ELF5	201PHF5/CF5
	DESCRIPTION		PART NO.	QUANTITY PER MODEL											
33	Bushing		BUS39	1	1	1	1	1	1	1	1	1	1	1	1
34	Retainer, Sight Glass		GB1091	1	1	1	1	1	1	1	1	1	1	1	1
35	Screw, Retainer		011P11	4	4	4	4	4	4	4	4	4	4	4	4
36	Sight Glass		GA1228	1	1	1	1	1	1	1	1	1	1	1	1
37	Gasket, Sight Glass		GA1233	2	2	2	2	2	2	2	2	2	2	2	2
39	Rod, Connecting Assembly		ROD79	6	6	6	6	6	6	6	6	6	6	6	6
40	Piston & Pin		GB1001				6	6	6				6	6	6
			GB1003	6	6	6				6	6	6			
41	Pin, Piston **		PIN40	6	6	6				6	6	6			
			PIN41				6	6	6				6	6	6
42	Retainer, Piston Pin		0580P11	12	12	12	12	12	12	12	12	12	12	12	12
43	Washer, Piston		GA1013	12	12	12	12	12	12	12	12	12	12	12	12
44	Ring, Piston		GA1014				6	6	6				6	6	6
			GA1026	6	6	6				6	6	6			
45	Cover, End		GD1218T1	1	1	1	1	1	1	1	1	1	1	1	1
46	Gasket, End Cover		GA1209	1	1	1	1	1	1	1	1	1	1	1	1
47	Seal, Bolt		GKT342	1	1	1	1	1	1	1	1	1	1	1	1
48	Screw, End Cover		012P13	16	16	16	16	16	16	16	16	16	16	16	16
49	Identification Tag		–	1	1	1	1	1	1	1	1	1	1	1	1
50	Valve, Pressure Relief		GA1581	1	1	1	1	1	1	1	1	1	1	1	1
51	Elbow, Connecting		051P36	1	1	1	1	1	1	1	1	1	1	1	1
55	Pump, Oil		PMP85A	1	1	1	1	1	1	1	1	1	1	1	1
56	Gasket, Oil Pump		GKT312	1	1	1	1	1	1	1	1	1	1	1	1
57	Screw, Oil Pump		034P10	8	8	8	8	8	8	8	8	8	8	8	8
58	Crankcase **		CCS75AT1				1	1	1				1	1	1
			CCS75AT2	1	1	1				1	1	1			
59	Crankshaft		CKS53T1	1	1	1	1	1	1	1	1	1	1	1	1
60	Key, Shaft		GA1028	1	1	1	1	1		1	1	1	1	1	
			KEY10						1						1
61	Washer, Inner Thrust		GA1969	1	1	1	1	1	1	1	1	1	1	1	1
62	Valve, Foam Control		VAL496	1	1	1	1	1	1	1	1	1	1	1	1
63	Strainer, Oil Assem.		GB1381	1	1	1	1	1	1	1	1	1	1	1	1
64	Bearings *	A	BRG123	1	1	1	1	1	1	1	1	1	1	1	1
		B	GA1550	2	2	2	2	2	2	2	2	2	2	2	2
65	End Cover Plug		055P71	2	2	2	2	2	2	2	2	2	2	2	2

* Field replacement of bearings require line boring. Refer to National Service Bulletin SR116.
** Not available as separate item.

D/B METIC 6 CYLINDER HERMETIC COMPRESSORS
OUT OF PRODUCTION MODELS

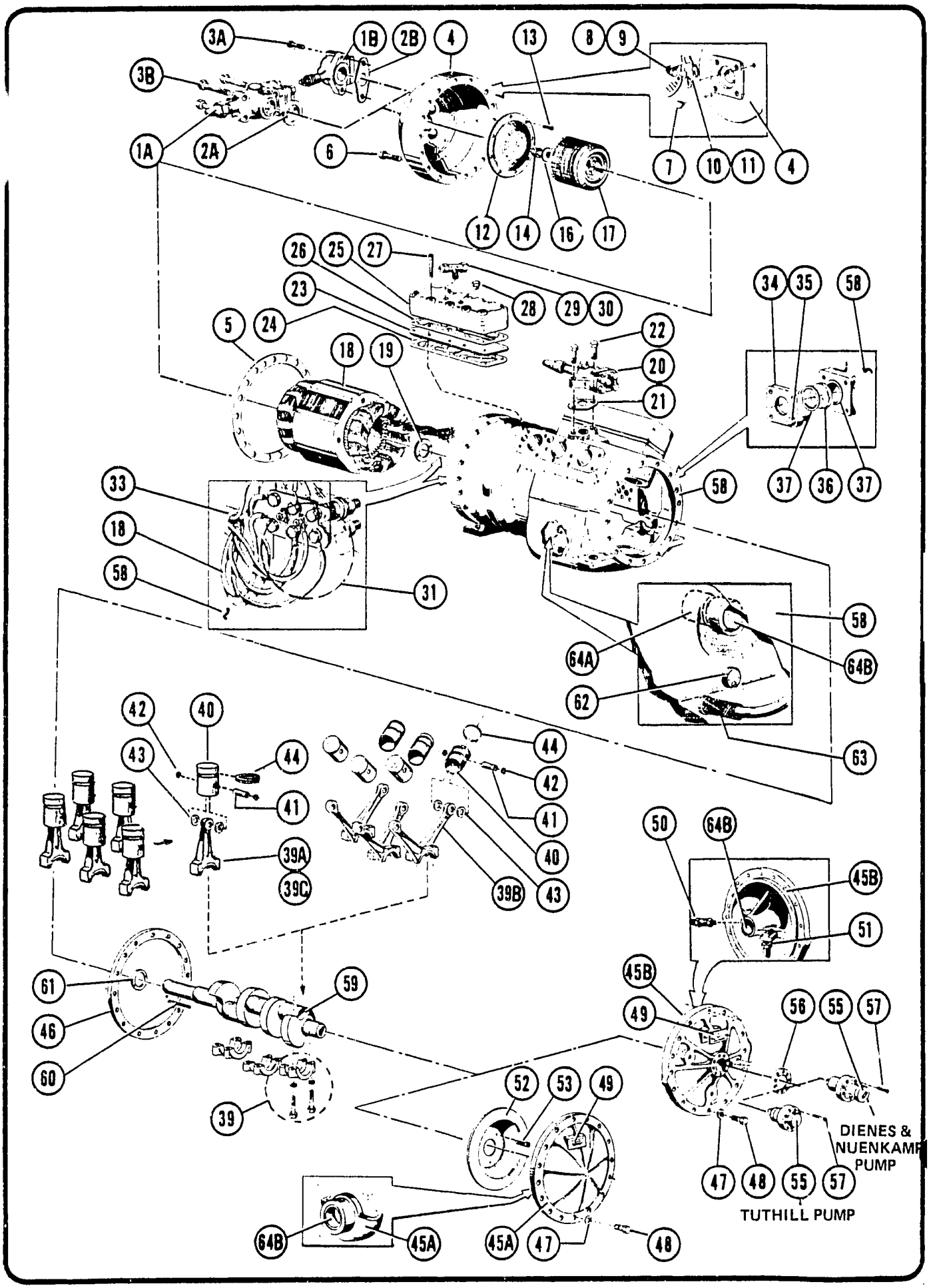

D/B METIC 6 CYLINDER HERMETIC COMPRESSORS
OUT OF PRODUCTION MODELS

				60 HERTZ												50 HERTZ											
			SPECIFICATIONS: DISPL. (CFH)	1698			2034			2412				2997		1410				1698			2010			2487	
			SPECIFICATIONS: BORE X STROKE (IN)	2 x 1 1/2			2 3/16 x 1 1/2			2 3/16 x 1 49/64				2 3/16 x 2 3/16		2 x 1 1/2				2 3/16 x 1 1/2			2 3/16 x 1 49/64			2 3/16 x 2 3/16	
			COMP. MODEL	50L	75H/LF	100PCF	50PEL	75PC/ELF	150PHF	75PL	100PH/C/ELF	150PCF	200PHF	174PCF	30EL5	50C/ELF5	75CF5	100PCF5	50PL5	75PH/LF5	100PHF5	50PEL5	75PC/ELF5	150PHF5	100PH/C/ELF5	200PHF5
	DESCRIPTION		PART NO.	QUANTITY PER MODEL																							
1	Valve, Suction Service	A	VAL59		1	1		1	1	1	1	1	1	1				1		1	1		1	1	1	1
			VAL83														1									
		B	VAL374	1			1								1	1			1			1				
2	Gasket Suction Valve	A	GKT62		1	1		1	1	1	1	1	1	1			1	1		1	1		1	1	1	1
		B	GKT340	1			1								1	1			1			1				
3	Screw, Suction Valve	A	014P17	2			2								2	2			2			2				
		B	014P29		4	4		4	4	4	4	4	4	4			4	4		4	4		4	4	4	4
4	Cover Motor End		COV112																							1
			COV60	1			1								1	1		1	1							
			COV61		1			1		1							1			1		1	1			
			COV62			1			1		1	1	1	1							1			1	1	
5	Gasket, End Cover		GA1209	1	1	1	1	1	1	1	1	1	1	1	1	1	1	1	1	1	1	1	1	1	1	1
6	Screw, End Cover		012P13	16	16	16	16	16		16					16	16	16	16	16	16		16	16			
			012P23						16		16	16	16	16							16			16	16	
			012P27																							16
7	Plug, End Cover		055P61	1	1	1	1	1	1	1	1	1	1	1	1	1	1	1	1	1	1	1	1	1	1	1
8	Elbow, End Cover		072P01	1	1	1	1	1	1	1	1	1	1	1	1	1	1	1	1	1	1	1	1	1	1	1
9	Cap, Elbow		0212P02	2	2	2	2	2	2	2	2	2	2	2	2	2	2	2	2	2	2	2	2	2	2	2
10	Tag, Identification		—	1	1	1	1	1	1	1	1	1	1	1	1	1	1	1	1	1	1	1	1	1	1	1
11	Tag, Identification		—	1	1	1	1	1	1	1	1	1	1	1	1	1	1	1	1	1	1	1	1	1	1	1
12	Filter, Suction		FLR16	1	1	1	1	1	1	1	1	1	1	1	1	1	1	1	1	1	1	1	1	1	1	1
13	Screw, Filter		SCR69	4	3	4	4	8	8	8	8	8	8	8	4	4	8	4	4	8	8	8	8	8	8	8
14	Lockwasher & Screw		—	1	1	1	1	1	1	1	1	1	1	1	1	1	1	1	1	1	1	1	1	1	1	1
16	Retainer, Rotor		RTR25	1	1	1	1	1	1	1	1	1	1	1	1	1	1	1	1	1	1	1	1	1	1	1
17	Rotor		—	CONSULT FACTORY																							
18	Stator		—	CONSULT FACTORY																							
19	Washer, Outer Thrust		GA1968	1	1	1	1	1	1	1	1	1	1	1	1	1	1	1	1	1	1	1	1	1	1	1
20	Valve, Discharge Service		VAL372	1			1								1	1	1		1			1				
			VAL373		1	1		1	1	1	1	1	1	1				1		1	1		1	1	1	1
21	Gasket, Discharge Valve		GKT340	1	1	1	1	1	1	1	1	1	1	1	1	1	1	1	1	1	1	1	1	1	1	1
22	Screw, Discharge valve		014P17	2	2	2	2	2	2	2	2	2	2	2	2	2	2	2	2	2	2	2	2	2	2	2
23	Valve Plate Assembly		PLT2001A	(2) ALL MODELS SEE PAGE 45																							
24	Gasket, Valve Plate		GKT376	2	2	2									2	2	2	2								
			GKT377				2	2	2	2	2	2	2	2					2	2	2	2	2	2	2	2
25	Head, Valve RH		GD1189	1	1	1	1	1	1	1	1	1	1	1	1	1	1	1	1	1	1	1	1	1	1	1
	Head, Valve LH		GD1190	1	1	1	1	1	1	1	1	1	1	1	1	1	1	1	1	1	1	1	1	1	1	1
26	Gasket, Head		GC1150	(2) ALL MODELS SEE PAGE 46																							
27	Screw, Valve Head		012P27	20	20	20	20	20	20	20	20	20	20	20	20	20	20	20	20	20	20	20	20	20	20	20
28	Plug		055P61	1	1	1	1	1	1	1	1	1	1	1	1	1	1	1	1	1	1	1	1	1	1	1
29	Tee		GA1612	1	1	1	1	1	1	1	1	1	1	1	1	1	1	1	1	1	1	1	1	1	1	1
30	Cap		0212P02	2	2	2	2	2	2	2	2	2	2	2	2	2	2	2	2	2	2	2	2	2	2	2
31	Terminal Post Assembly		—	QUANTITIES WILL VARY WITH ϕ AND VOLTAGE FOR KIT INFORMATION SEE PAGE 49																							

D/B METIC 6 CYLINDER HERMETIC COMPRESSORS
OUT OF PRODUCTION MODELS CONTINUED

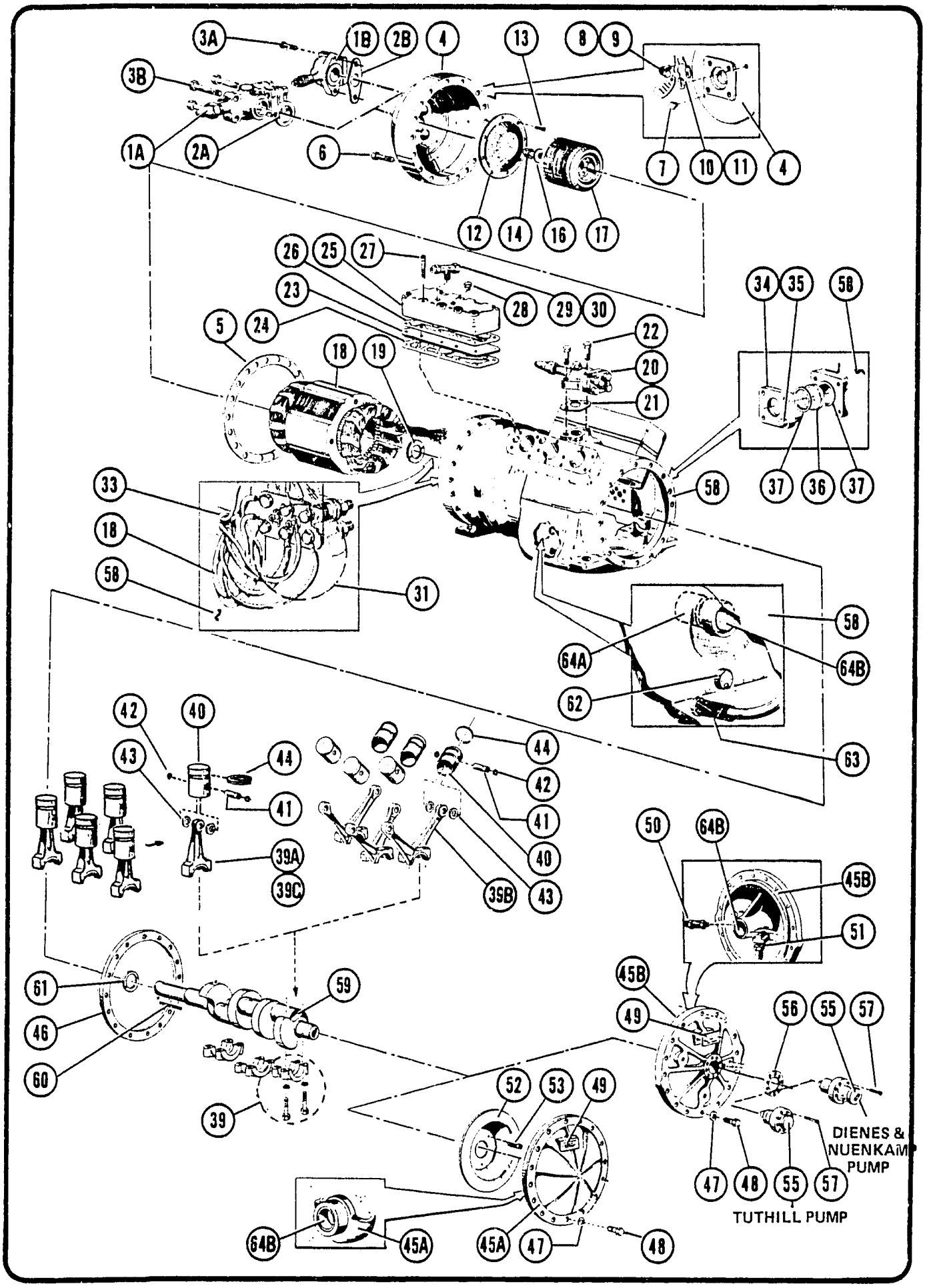

D/B METIC 6 CYLINDER HERMETIC COMPRESSORS
OUT OF PRODUCTION MODELS CONTINUED

			60 HZ.											50 HZ.											
SPECIFICATIONS		DISPL. (CFH)	1698			2034			2412				2997	1410				1698			2010				2487
		BORE X STROKE (IN)	2 x 1 1/2			2 3/16 x 1 1/2			2 3/16 x 1 49/64				2 3/16 x 2 3/16	2 x 1 1/2				2 3/16 x 1 1/2			2 3/16 x 1 49/64				2 3/16 x 2 3/16
		COMP. MODEL	50L	75H/LF	100PCF	50PEL	75PC/ELF	150PHF	75PL	100PH/C/ELF	150PCF	200PHF	174PCF	30EL5	50C/ELF5	75CF5	100PCF5	50PL5	75PH/LF5	100PHF5	50PEL5	75PC/ELF5	150PHF5	100PH/C/ELF5	200PHF5
DESCRIPTION		PART NO.	QUANTITY PER MODEL																						
33	Bushing	BUS39	1	1	1	1	1	1	1	1	1	1	1	1	1	1	1	1	1	1	1	1	1	1	1
34	Retainer, Sight Glass	GB1091	1	1	1	1	1	1	1	1	1	1	1	1	1	1	1	1	1	1	1	1	1	1	1
35	Screw, Retainer	011P11	4	4	4	4	4	4	4	4	4	4	4	4	4	4	4	4	4	4	4	4	4	4	4
36	Sight Glass	GA1228	1	1	1	1	1	1	1	1	1	1	1	1	1	1	1	1	1	1	1	1	1	1	1
37	Gasket, Sight Glass	GA1233	1	1	1	1	1	1	1	1	1	1	1	1	1	1	1	1	1	1	1	1	1	1	1
39	Rod, Connecting A	ROD43	6	6	6	6	6	6						6	6	6	6	6	6	6					
	B	ROD79											6											6	6
	C	GD1225							6	6	6	6									6	6	6		
40	Piston & Pin	GB1001				6	6	6	6	6	6	6	6					6	6	6	6	6	6	6	6
		GB1003	6	6	6									6	6	6	6								
41	Pin, Piston **	PIN40	6	6	6									6	6	6	6								
		PIN41				6	6	6	6	6	6	6	6					6	6	6	6	6	6	6	6
42	Retainer, Piston Pin	0580P11	12	12	12	12	12	12	12	12	12	12	12	12	12	12	12	12	12	12	12	12	12	12	12
43	Washer, Piston	GA1013	12	12	12	12	12	12	12	12	12	12	12	12	12	12	12	12	12	12	12	12	12	12	12
44	Ring, Piston	GA1014				6	6	6	6	6	6	6	6												
		GA1026	6	6	6																				
45	Cover, End A	GD1047T3	1	1										1	1	1									
	B	GD1218T1			1	1	1	1	1	1	1	1	1				1	1	1	1	1	1	1	1	1
46	Gasket, End Cover	GA1209	1	1	1	1	1	1	1	1	1	1	1	1	1	1	1	1	1	1	1	1	1	1	1
47	Seal, Bolt	GKT342	1	1	1	1	1	1	1	1	1	1	1	1	1	1	1	1	1	1	1	1	1	1	1
48	Screw, End Cover	012P13	16	16	16	16	16	16	16	16	16	16	16	16	16	16	16	16	16	16	16	16	16	16	16
49	Identification Tag	—	1	1	1	1	1	1	1	1	1	1	1	1	1	1	1	1	1	1	1	1	1	1	1
50	Valve, Pressure Relief	GA1581			1	1	1	1	1	1	1	1	1	1	1	1	1	1	1	1	1	1	1	1	1
51	Elbow, Connecting	051P36	1	1	1	1	1	1	1	1	1	1	1	1	1	1	1	1	1	1	1	1	1	1	1
52	Slinger, Oil	GC1146T2	1	1										1	1	1									
53	Screw, Slinger	SCR30	3	3										3	3	3									
55	Pump, Oil	PMP85A			1	1	1	1	1	1	1	1	1				1	1	1	1	1	1	1	1	1
56	Gasket, Oil Pump	GKTJ12			1	1	1	1	1	1	1	1	1				1	1	1	1	1	1	1	1	1
57	Screw, Oil Pump	034P10			8	8	8	8	8	8	8	8	8				8	8	8	8	8	8	8	8	8
58	Crankcase **	CCS47T1												1	1										
		CCS47T2				1	1	1										1							
		CCS47T3	1	1	1											1	1			1					
		CCS47T4																	1						
		CCS75AT1	1										1											1	1
		GE1077							1	1	1	1									1	1	1		
59	Crankshaft	CKS34		1	1		1	1								1	1		1	1					
		CKS35	1			1								1	1			1							
		CKS53											1											1	1
		GD1227							1	1	1	1									1	1	1		
60	Key, Shaft	KIT369	1	1	1	1	1	1	1	1	1	1	1	1	1	1	1	1	1	1	1	1	1	1	1
61	Washer, Inner Thrust	GA1969	1	1	1	1	1	1	1	1	1	1	1	1	1	1	1	1	1	1	1	1	1	1	1
62	Valve, Foam Control	VAL496	1	1	1	1	1	1	1	1	1	1	1	1	1	1	1	1	1	1	1	1	1	1	1
63	Strainer, Oil Assem.	GB1381			1	1	1	1	1	1							1	1	1	1	1	1	1	1	1
64	Bearings * A	BRG123	1	1	1	1	1	1	1	1	1	1	1	1	1	1	1	1	1	1	1	1	1	1	1
	B	GA1550	2	2	2	2	2	2	2	2	2	2	2	2	2	2	2	2	2	2	2	2	2	2	2

* Field replacement of bearings require line boring. Refer to National Service Bulletin SR116.
** Not available as separate item.

D-LINE 2 CYLINDER INTEGRAL DIRECT DRIVE COMPRESSORS
CURRENT PRODUCTION MODELS

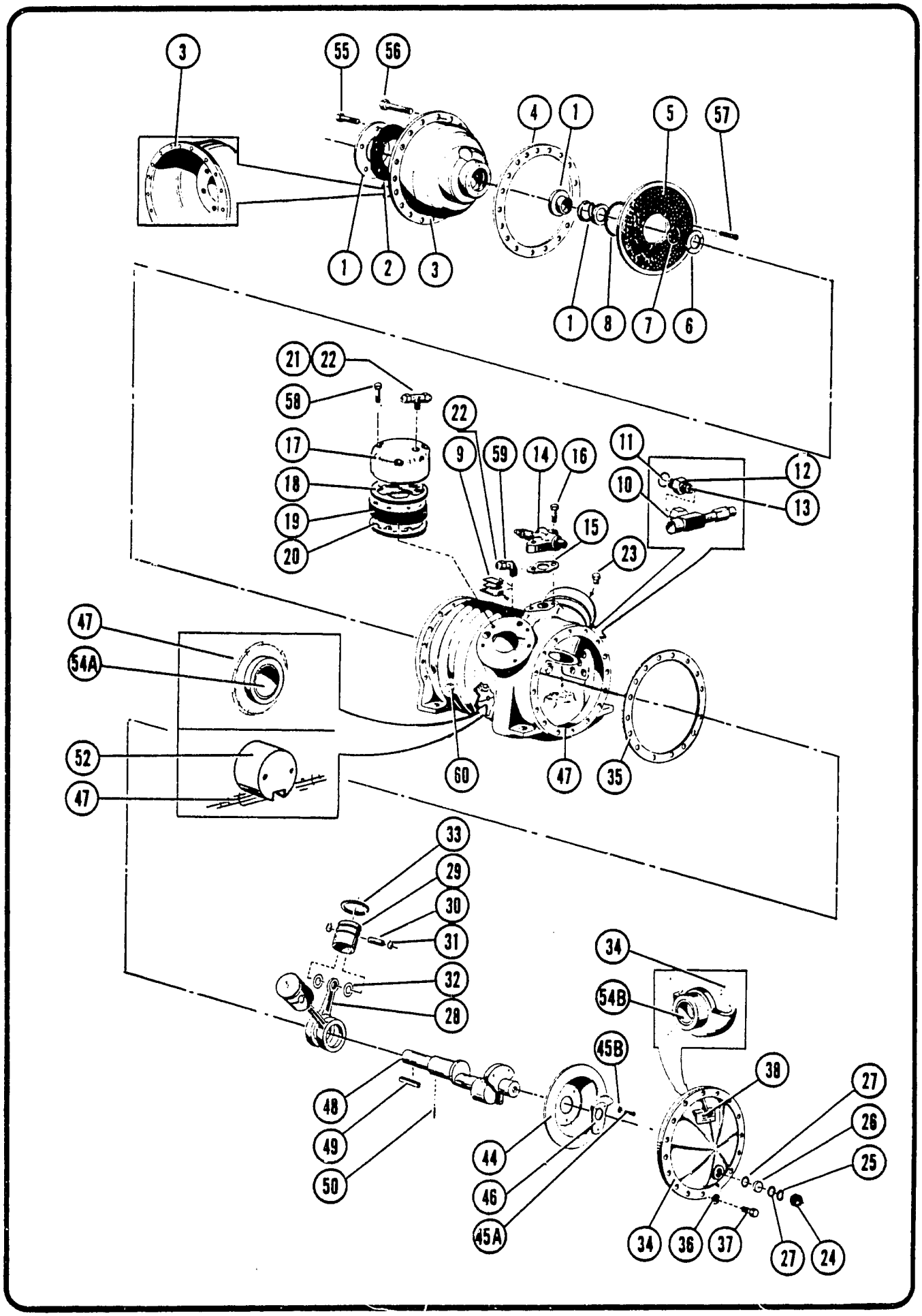

D-LINE 2 CYLINDER INTEGRAL DIRECT DRIVE COMPRESSORS
CURRENT PRODUCTION MODELS

			60 HZ.										50 HZ.								
		SPECIFICATIONS: DISPL. (CFH)	348		465			566			677		290			388			472		
		BORE X STROKE (IN)	$1^{13}/_{16} \times 1^{1}/_{8}$		$1^{13}/_{16} \times 1^{1}/_{2}$			$2 \times 1^{1}/_{2}$			$2^{3}/_{16} \times 1^{1}/_{2}$		$1^{13}/_{16} \times 1^{1}/_{8}$			$1^{13}/_{16} \times 1^{1}/_{2}$			$2 \times 1^{1}/_{2}$		
		COMP. MODEL	15DH/CF/LF	20DHF	15DC/ELF	20DH/CF/LF	30DHF	15DL	20DC/ELF	30DCF	20DL	30DH/LF	15DHF5	15DH5/CF5/LF5	20DHF5	15DC5/ELF5	20DH5/CF5/LF5	30DHF5	15DL5	20DC5/ELF5	30DCF5
	DESCRIPTION	PART NO.	QUANTITY PER MODEL																		
1	Seal Assembly	GA1731	1	1	1	1	1	1	1	1	1	1	1	1	1	1	1	1	1	1	1
2	Gasket	GA1693	1	1	1	1	1	1	1	1	1	1	1	1	1	1	1	1	1	1	1
3	Seal, Housing	GD1200	1	1	1	1	1	1	1	1	1	1	1	1	1	1	1	1	1	1	1
4	Gasket, Seal Housing	GA1011	1	1	1	1	1	1	1	1	1	1	1	1	1	1	1	1	1	1	1
5	Filter, Suction	FLR31	1	1	1	1	1	1	1	1	1	1	1	1	1	1	1	1	1	1	1
6	Washer, Outer Thrust	GA1967	1	1	1	1	1	1	1	1	1	1	1	1	1	1	1	1	1	1	1
7	Retainer, Thrust Washer	0693P00	1	1	1	1	1	1	1	1	1	1	1	1	1	1	1	1	1	1	1
8	O-Ring	0458P35	1	1	1	1	1	1	1	1	1	1	1	1	1	1	1	1	1	1	1
9	Tag, I.D.		3	3	3	3	3	3	3	3	3	3	3	3	3	3	3	3	3	3	3
10	Valve, Suction Service	GA422	1	1	1	1	1	1	1	1	1	1	1	1	1	1	1	1	1	1	1
11	Gasket, Suction Valve	GA430	1	1	1	1	1	1	1	1	1	1	1	1	1	1	1	1	1	1	1
12	Adapter, Valve	GA461T2	1	1	1	1	1	1	1	1	1	1	1	1	1	1	1	1	1	1	1
13	Adaptor, O-Ring	RNG120	1	1	1	1	1	1	1	1	1	1	1	1	1	1	1	1	1	1	1
14	Valve, Discharge Service	VAL363	1	1	1	1	1	1	1	1	1	1	1	1	1	1	1	1	1	1	1
15	Gasket, Discharge Valve	GKT398	1	1	1	1	1	1	1	1	1	1	1	1	1	1	1	1	1	1	1
16	Screw, Discharge Valve	011P17	2	2	2	2	2	2	2	2	2	2	2	2	2	2	2	2	2	2	2
17	Head, Valve RH	GC1003	1	1	1	1	1	1	1	1	1	1	1	1	1	1	1	1	1	1	1
	Head, Valve LH	GC1007	1	1	1	1	1	1	1	1	1	1	1	1	1	1	1	1	1	1	1
18	Gasket, Head	GKT343	2	2	2	2	2	2	2	2	2	2	2	2	2	2	2	2	2	2	2
19	Valve Plate Assembly	GB1042	2	2	2	2	2	2	2	2	2	2	2	2	2	2	2	2	2	2	2
20	Gasket, Valve Plate	GKT370	2	2	2	2	2						2	2	2						
		GKT371						2	2	2						2	2	2			
		GKT372									2	2							2	2	2
21	Tee	GA1612	1	1	1	1	1	1	1	1	1	1	1	1	1	1	1	1	1	1	1
22	Cap	0212P02	2	2	2	2	2	2	2	2	2	2	2	2	2	2	2	2	2	2	2
23	Plug	055P61	1	1	1	1	1	1	1	1	1	1	1	1	1	1	1	1	1	1	1
24	Retainer, Sight Glass	GA211	1	1	1	1	1	1	1	1	1	1	1	1	1	1	1	1	1	1	1
25	Ring, Friction	GA212	1	1	1	1	1	1	1	1	1	1	1	1	1	1	1	1	1	1	1
26	Sight Glass	GA210	1	1	1	1	1	1	1	1	1	1	1	1	1	1	1	1	1	1	1
27	Gasket, Sight Glass	GA213	2	2	2	2	2	2	2	2	2	2	2	2	2	2	2	2	2	2	2
28	Rod, Connecting	GA1000	2	2	2	2	2	2	2	2	2	2	2	2	2	2	2	2	2	2	2
29	Piston & Pin	GB1001	2	2	2	2	2						2	2	2						
		GB1002						2	2	2						2	2	2			
		GB1003									2	2							2	2	2

D-LINE 2 CYLINDER INTEGRAL DIRECT DRIVE COMPRESSORS
CURRENT PRODUCTION MODELS CONTINUED

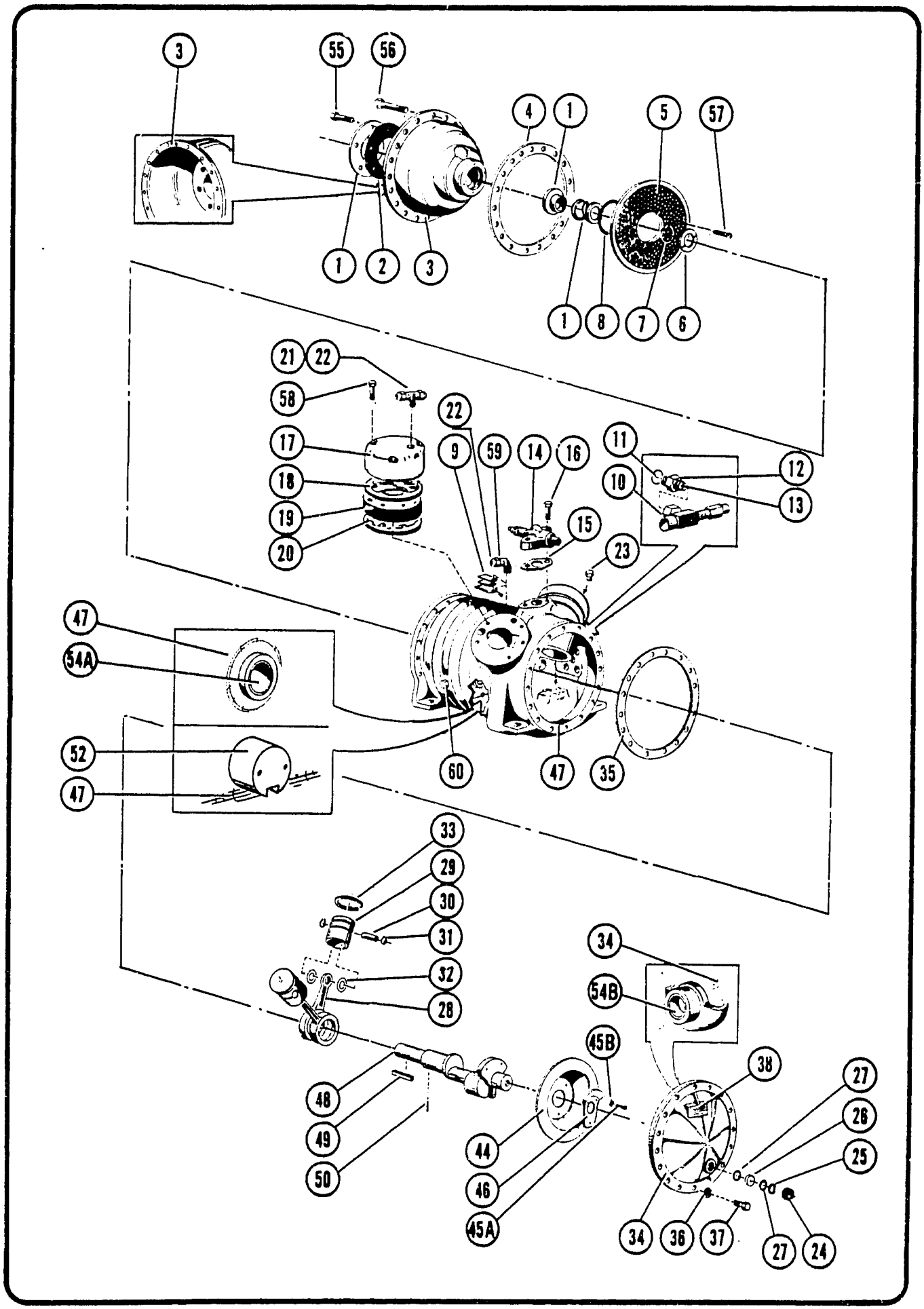

D-LINE 2 CYLINDER INTEGRAL DIRECT DRIVE COMPRESSORS
CURRENT PRODUCTION MODELS CONTINUED

				60 HZ.										50 HZ.								
			SPECIFICATIONS: DISPL. (CFH)	348		465			566			677		290		388	472			564		
			SPECIFICATIONS: BORE X STROKE (IN)	$1^{13}/_{16} \times 1^{1}/_{8}$		$1^{13}/_{16} \times 1^{1}/_{2}$			$2 \times 1^{1}/_{2}$			$2^{3}/_{16} \times 1^{1}/_{2}$		$1^{13}/_{16} \times 1^{1}/_{8}$		$1^{13}/_{16} \times 1^{1}/_{2}$	$2 \times 1^{1}/_{2}$			$2^{3}/_{16} \times 1^{1}/_{2}$		
			SPECIFICATIONS: COMP. MODEL	15DH/CF/LF	20DHF	15DC/ELF	20DH/CF/LF	30DHF	15DL	20DC/ELF	30DCF	20DL	30DH/LF	15DHF5	15DH5/CF5/LF5	20DHF5	15DC5/ELF5	20DH5/CF5/LF5	30DHF5	15DL5	20DC5/ELF5	30DCF5
	DESCRIPTION		PART NO.	QUANTITY PER MODEL																		
30	Pin Piston *		PIN39	2	2	2	2	2						2	2	2						
			PIN40						2	2	2						2	2	2			
			PIN41									2	2							2	2	2
31	Retainer, Piston Pin		0580P11	4	4	4	4	4	4	4	4	4	4	4	4	4	4	4	4	4	4	4
32	Washer, Piston		GA1013	4	4	4	4	4	4	4	4	4	4	4	4	4	4	4	4	4	4	4
33	Ring, Piston		GA1014									2	2							2	2	2
			GA1026						2	2	2						2	2	2			
			GA1027	2	2	2	2	2						2	2	2						
34	Cover,		GD1001	1	1	1	1	1	1	1	1	1	1	1	1	1	1	1	1	1	1	1
35	Gasket, End Cover		GA1011	1	1	1	1	1	1	1	1	1	1	1	1	1	1	1	1	1	1	1
36	Seal, Screw		GKT341	1	1	1	1	1	1	1	1	1	1	1	1	1	1	1	1	1	1	1
37	Screw, End Cover		011P13	16	16	16	16	16	16	16	16	16	16	16	16	16	16	16	16	16	16	16
38	I.D. Tag		—	1	1	1	1	1	1	1	1	1	1	1	1	1	1	1	1	1	1	1
44	Slinger, Oil		GB1000	1	1	1	1	1	1	1	1	1	1	1	1	1	1	1	1	1	1	1
45	Screw, Slinger	A	SCR30	1	1	1	1	1	1	1	1	1	1	1	1	1	1	1	1	1	1	1
			SCR31	2	2	2	2	2	2	2	2	2	2	2	2	2	2	2	2	2	2	2
	Lockwasher	B	010P01	3	3	3	3	3	3	3	3	3	3	3	3	3	3	3	3	3	3	3
46	Counterweight, Slinger		GA1177	1	1																	
			GA1178			1	1	1							1	1						
			GA1179						1	1	1	1	1					1	1	1	1	1
47	Crankcase *		CCS44T1	1	1									1								
			CCS44T2		1	1	1								1	1						
			CCS44T3					1	1	1							1	1	1			
			CCS44T4								1	1								1	1	1
48	Crankshaft		GC1392			1	1	1	1	1	1	1	1		1	1	1	1	1	1	1	1
			GC1458	1	1									1								
49	Key, Shaft		KIT369	1	1	1	1	1	1	1	1	1	1	1	1	1	1	1	1	1	1	1
50	Pin, Spring		PIN80T3	1	1	1	1	1	1	1	1	1	1	1	1	1	1	1	1	1	1	1
52	Valve, Foam Control		VAL496	1	1	1	1	1	1	1	1	1	1	1	1	1	1	1	1	1	1	1
54	Bearing **	A	GA1037	1	1	1	1	1	1	1	1	1	1	1	1	1	1	1	1	1	1	1
		B	GA1038	1	1	1	1	1	1	1	1	1	1	1	1	1	1	1	1	1	1	1
55	Bolt, Seal Plate		034P09	6	6	6	6	6	6	6	6	6	6	6	6	6	6	6	6	6	6	6
56	Bolt, Seal Housing		012P13	16	16	16	16	16	16	16	16	16	16	16	16	16	16	16	16	16	16	16
57	Screw, Filter		0533P09	4	4	4	4	4	4	4	4	4	4	4	4	4	4	4	4	4	4	4
58	Screw, Head		011P17	12	12	12	12	12	12	12	12	12	12	12	12	12	12	12	12	12	12	12
59	Elbow, Crankcase		072P01	1	1	1	1	1	1	1	1	1	1	1	1	1	1	1	1	1	1	1
60	Plug, Crankcase		055P62	1	1	1	1	1	1	1	1	1	1	1	1	1	1	1	1	1	1	1

*Not available as separate item.

**Field replacement of bearings require line boring. Refer to National Service Bulletin SR116.

D-LINE 3 CYLINDER DIRECT DRIVE COMPRESSORS
CURRENT PRODUCTION MODELS

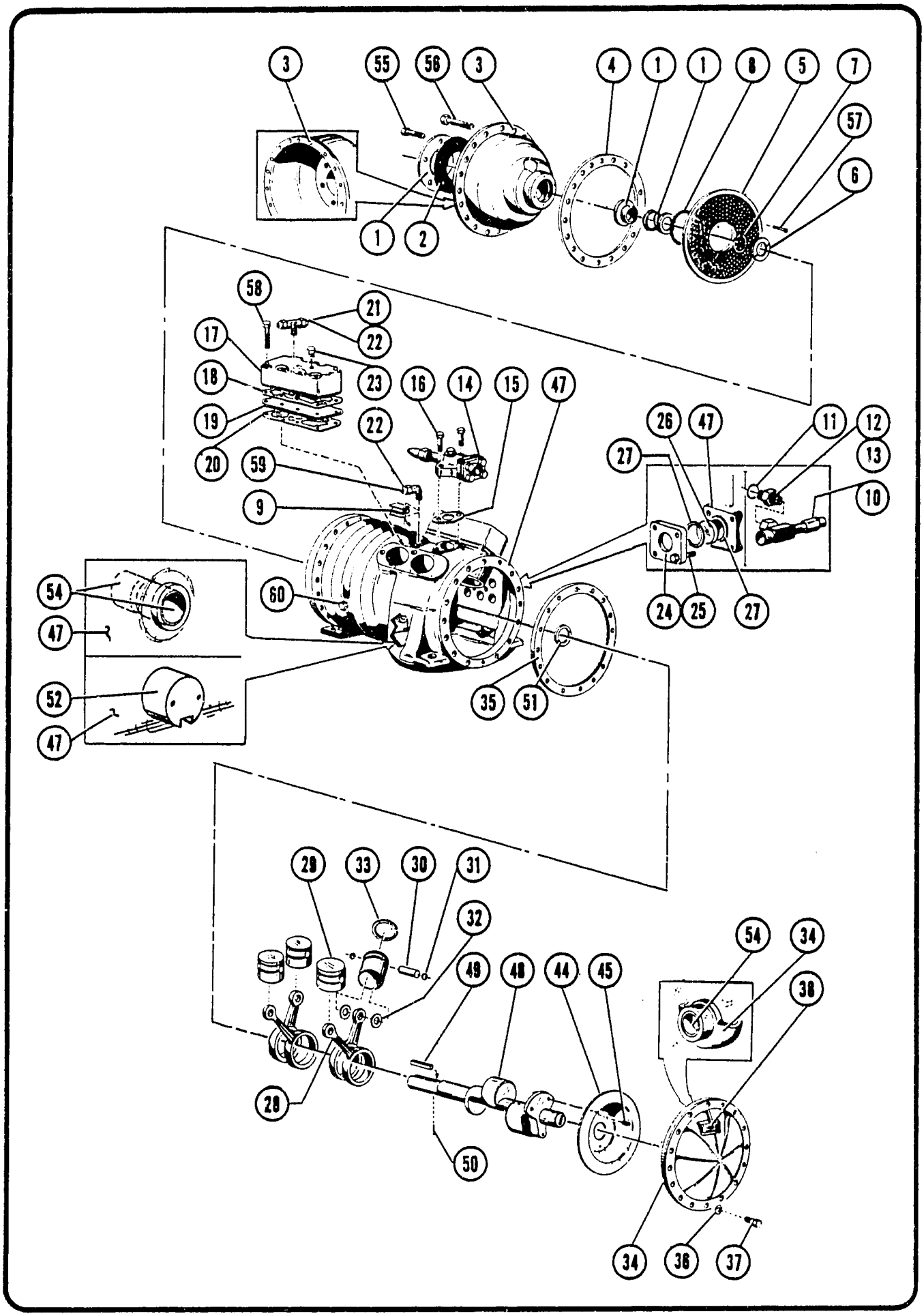

D-LINE 3 CYLINDER DIRECT DRIVE COMPRESSORS
CURRENT PRODUCTION MODELS

SPECIFICATIONS	60 HZ.		50 HZ.		
DISPL. (CFH)	846		705		846
BORE X STROKE (IN)	2 x 1 1/2		2 x 1 1/2		2 3/16 x 1 1/2
COMP MODEL	52DHF	20DL5 †	30DH5/LF5†		52DHF5

	DESCRIPTION	PART NO.	QUANTITY			
1	Seal Assembly	GB1203	1	1	1	1
2	Gasket	GA1478	1	1	1	1
3	Seal, Housing	GD1200	1	1	1	1
4	Gasket, Seal Housing	GA1209	2	2	2	2
5	Filter, Suction	FLR32	1	1	1	1
6	Washer, Outer Thrust	GA1968	1	1	1	1
7	Retainer, Thrust Washer	0693P01	1	1	1	1
8	O Ring	RNG292	1	1	1	1
9	Tag I.D.	—	3	3	3	3
10	Valve, Suction Service	GA424	1			1
		GA422		1	1	
11	Gasket, Suction Valve	GA431	1	1	1	1
12	Adapter, Valve	GA461T1	1			1
		GA461T3		1	1	
13	Adaptor, O-Ring	RNG112	1	1	1	1
14	Valve, Discharge	VAL363		1	1	
	Service	VAL615	1			1
15	Gasket, Discharge Valve	GKT398	1	1	1	1
16	Screw, Discharge Valve	011P17	2	2	2	2
17	Head, Valve RH	GD1191	1	1	1	1
	Head, Valve LH	GD1192	1	1	1	1
18	Gasket Head	GB1089	2	2	2	2
19	Valve Plate Assembly	GC1162	2	2	2	2
20	Gasket, Valve Plate	GKT374	2	2	2	
		GKT375				2
21	Tee	GA1612	1	1	1	1
22	Cap	0212P02	2	2	2	2
23	Plug	055P61	1	1	1	1
24	Retainer, Sight Glass	GB1091	1	1	1	1
25	Screw, Retainer	011P11	4	4	4	4
26	Sight Glass	GA1228	1	1	1	1
27	Gasket, Sight Glass	GA1233	2	2	2	2

SPECIFICATIONS	60 HZ.		50 HZ.		
DISPL. (CFH)	846		705		846
BORE X STROKE (IN)	2 x 1 1/2		2 x 1 1/2		2 3/16 x 1 1/2
COMP MODEL	52DHF	20DL5 †	30DH5/LF5†		52DHF5

	DESCRIPTION	PART NO.	QUANTITY			
28	Rod Connecting	GC1156	4	4	4	4
29	Piston & Pin	GB1001				3
		GB1003	3	3	3	
		GB1368	1	1	1	
		GB1369				1
30	Pin, Piston*	PIN40	4	4	4	
		PIN41				4
31	Retainer, Pin	0580P11	8	8	8	8
32	Washer, Piston	GA1013	8	8	8	8
33	Ring, Piston	GA1026	4	4	4	
		GA1027				4
34	Cover	GD1047T1	1	1	1	1
35	Gasket, End Cover	GA1209	1	1	1	1
36	Seal, Screw	GKT342	1	1	1	1
37	Screw, End Cover	012P13	16	16	16	16
38	I.D. Tag	—	1	1	1	1
44	Slinger, Oil	GC1146T1	1	1	1	1
45	Screw, Slinger	SCR30	3	3	3	3
47	Crankcase*	CCS46T2	1	1	1	
		CCS46T3				1
48	Crankshaft	GD1117	1	1	1	
49	Key, Shaft	KIT369	1	1	1	1
50	Pin, Spring	PIN80T3	1	1	1	1
51	Washer, Inner Thrust	GA1966	1	1	1	1
52	Valve, Foam Control	VAL496	1	1	1	1
54	Bearing**	GA1554	3	3	3	3
55	Bolt, Seal Plate	012P11	6	6	6	6
56	Bolt, Seal Housing	012P13	16	16	16	16
57	Screw, Filter	0533P09	4	4	4	4
58	Screw, Head	012P27	18	18	18	18
59	Elbow, Crankcase	072P01	1	1	1	1
60	Plug, Crankcase	055P02	1	1	1	1

†Deleted from current production. See page 6 for comparable replacement compressor.
**Field replacement of bearings require line boring. Refer to National Service Bulletin SR116.
*Not available as separate item.

D-LINE 4 CYLINDER DIRECT DRIVE COMPRESSORS
CURRENT PRODUCTION MODELS

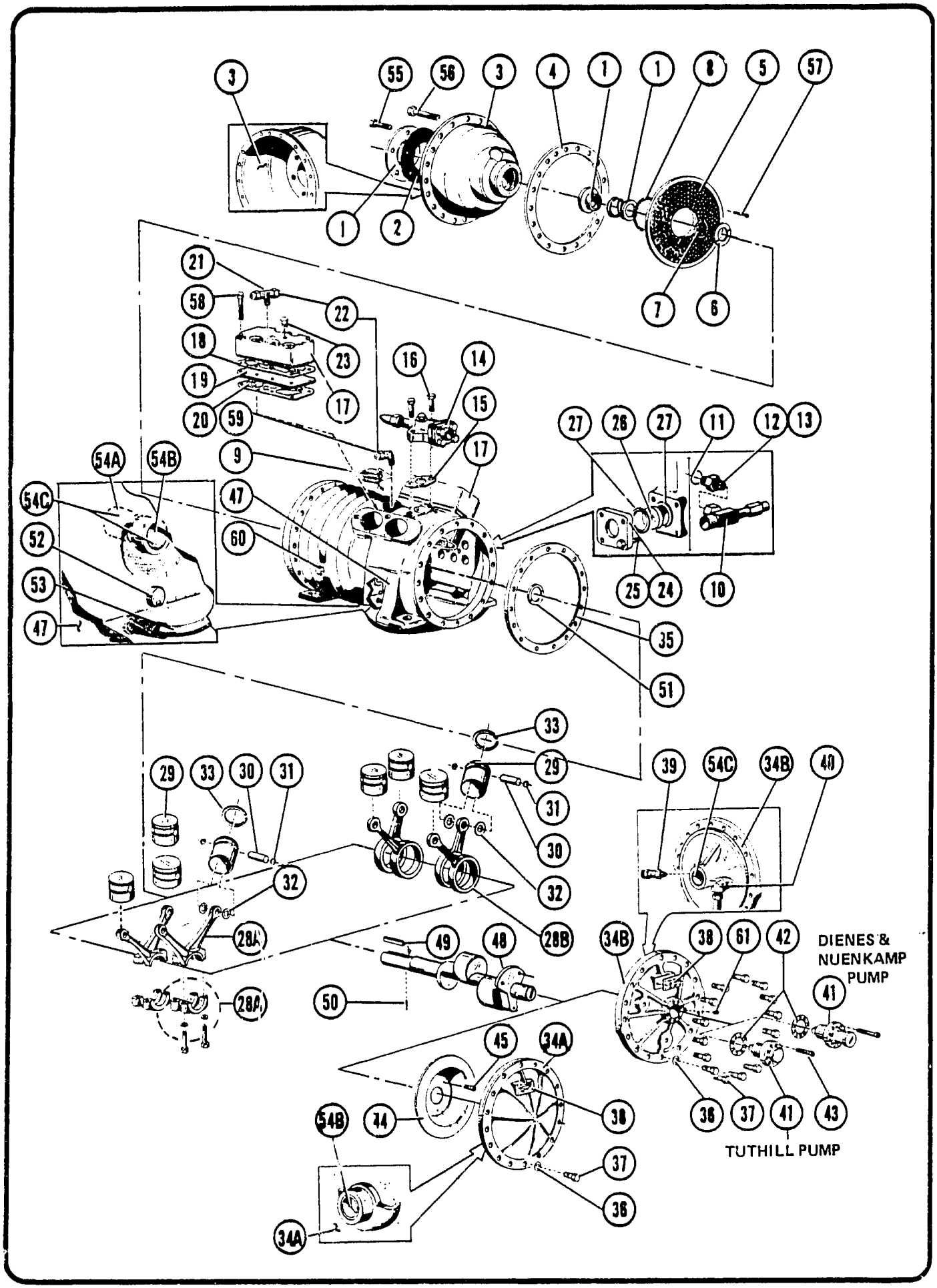

CURRENT PRODUCTION MODELS

60 HZ.

No.	Description	Part No.	30DC/ELF	50DCF	30DL	50DH/LF	75DHF	30DEL †	50DC/ELF	75DCF	100DPHF	51DPL	76DPH/C/ELF †	101DPCF †	111DPHF/CF	51DPEL †	77DPH/C/ELF	151DPHF/CF
	SPECIFICATIONS: DISPL. (CFH)		930		1128			1356				1680				2000		
	SPECIFICATIONS: BORE X STROKE (IN)		1 3/16 x 1 1/2		2 x 1 1/2			2 3/16 x 1 1/2				2 x 2 3/16				2 3/16 x 2 3/16		
			QUANTITY PER MODEL															
1	Seal Assembly	GB1203	1	1	1	1	1	1	1	1	1	1	1	1	1	1	1	1
2	Gasket	GA1478	1	1	1	1	1	1	1	1	1	1	1	1	1	1	1	1
3	Seal, Housing	GD1200	1	1	1	1	1	1	1	1	1	1	1	1	1	1	1	1
4	Gasket, Seal Housing	GA1209	2	2	2	2	2	2	2	2	2	2	2	2	2	2	2	2
5	Filter, Suction	FLR32	1	1	1	1	1	1	1	1	1	1	1	1	1	1	1	1
6	Washer, Outer Thrust	GA1968	1	1	1	1	1	1	1	1	1	1	1	1	1	1	1	1
7	Retainer, Thrust Washer	0693P01	1	1	1	1	1	1	1	1	1	1	1	1	1	1	1	1
8	O Ring	RNG292	1	1	1	1	1	1	1	1	1	1	1	1	1	1	1	1
9	I. D. Tags	—	3	3	3	3	3	3	3	3	3	3	3	3	3	3	3	3
10	Valve, Suction Service	GA424	1	1	1	1	1	1	1	1	1	1	1	1	1	1	1	1
11	Gasket, Suction Valve	GA431	1	1	1	1	1	1	1	1	1	1	1	1	1	1	1	1
12	Adapter, Valve	GA461T1	1	1	1	1	1	1	1	1	1	1	1	1	1	1	1	1
13	Adaptor, O-Ring	RNG112	1	1	1	1	1	1	1	1	1	1	1	1	1	1	1	1
14	Valve, Discharge Service	VAL363	1		1													
		VAL372																
		VAL373												1	1	1	1	1
		VAL615		1		1	1	1	1	1	1	1	1					
15	Gasket, Discharge Valve	GKT340										1	1	1	1	1	1	1
		GKT398	1	1	1	1	1	1	1	1	1							
16	Screw, Discharge Valve	011P17										2	2	2	2	2	2	2
		014P17	2	2	2	2	2	2	2	2	2							
17	Head, Valve RH	GD1191	1	1	1	1	1	1	1	1	1	1	1	1	1	1	1	1
	Head, Valve LH	GD1192	1	1	1	1	1	1	1	1	1	1	1	1	1	1	1	1
18	Gasket, Head	GB1089	2	2	2	2	2	2	2	2	2	2	2	2	2	2	2	2
19	Valve Plate Assembly	GC1162		2	2	2	2	2	2	2	2	2	2	2	2	2	2	2
20	Garket, Valve Plate	GKT373	2	2														
		GKT374			2	2	2					2	2	2	2			
		GKT375						2	2	2	2					2	2	2
21	Tee	GA1612	1	1	1	1	1	1	1	1	1	1	1	1	1	1	1	1
22	Cap	0212P02	3	3	3	3	3	3	3	3	3	3	3	3	3	3	3	3
23	Plug	055P61	2	2	2	2	2	2	2	2	2	2	2	2	2	2	2	2
24	Retainer, Sight Glass	GB1091	1	1	1	1	1	1	1	1	1	1	1	1	1	1	1	1
25	Screw, Retainer	011P11	4	4	4	4	4	4	4	4	4	4	4	4	4	4	4	4
26	Sight Glass	GA1228	1	1	1	1	1	1	1	1	1	1	1	1	1	1	1	1
27	Gasket, Sight Glass	GA1233	2	2	2	2	2	2	2	2	2	2	2	2	2	2	2	2
28	Rod, Connecting A	ROD79										4	4	4	4	4	4	4
	Rod, Connecting B	GC1156	4	4	4	4	4	4	4	4	4							
29	Piston	GB1001						4	4	4	4					4	4	4
		GB1002	4	4														
		GB1003			4	4	4					4	4	4	4			

50 HZ.

No.	Description	Part No.	30DC5/ELF5	50DCF5	30DL5	50DHF/LF5	75DHF5	31DPEL5 †	51DPH5/C5/ELF5 †	76DPCF5 †	101DPHF5/CF5	51DPL5 †	76DPH5/C5/ELF5 †	101DPCF5	111DPHF5/CF5
	SPECIFICATIONS: DISPL. (CFH)		940		1128			1400				1667			
	SPECIFICATIONS: BORE X STROKE (IN)		2 x 1 1/2		2 3/16 x 1 1/2			2 x 2 3/16				2 3/16 x 2 3/16			
			QUANTITY PER MODEL												
1	Seal Assembly	GB1203	1	1	1	1	1	1	1	1	1	1	1	1	1
2	Gasket	GA1478	1	1	1	1	1	[illegible]	1	1	1	1	1	1	1
3	Seal, Housing	GD1200	1	1	1	1	1	1	1	1	1	1	1	1	1
4	Gasket, Seal Housing	GA1209	2	2	2	2	2	2	2	2	2	2	2	2	2
5	Filter, Suction	FLR32	1	1	1	1	1	1	1	1	1	1	1	1	1
6	Washer, Outer Thrust	GA1968	1	1	1	1	1	1	1	1	1	1	1	1	1
7	Retainer, Thrust Washer	0693P01	1	1	1	1	1	1	1	1	1	1	1	1	1
8	O Ring	RNG292	1	1	1	1	1	1	1	1	1	1	1	1	1
9	I. D. Tags	—	3	3	3	3	3	3	3	3	3	3	3	3	3
10	Valve, Suction Service	GA424	1	1	1	1	1	1	1	1	1	1	1	1	1
11	Gasket, Suction Valve	GA431	1	1	1	1	1	1	1	1	1	1	1	1	1
12	Adapter, Valve	GA461T1	1	1	1	1	1	1	1	1	1	1	1	1	1
13	Adaptor, O-Ring	RNG112	1	1	1	1	1	1	1	1	1	1	1	1	1
14	Valve, Discharge Service	VAL363													
		VAL372							1	1	1	1	1	1	1
		VAL373	1					1							
		VAL615		1	1	1	1								
15	Gasket, Discharge Valve	GKT340						1	1	1	1	1	1	1	1
		GKT398	1	1	1	1	1								
16	Screw, Discharge Valve	011P17						2	2	2	2	2	2	2	2
		014P17	2	2	2	2	2								
17	Head, Valve RH	GD1191	1	1	1	1	1	1	1	1	1	1	1	1	1
	Head, Valve LH	GD1192	1	1	1	1	1	1	1	1	1	1	1	1	1
18	Gasket, Head	GB1089	2	2	2	2	2	2	2	2	2	2	2	2	2
19	Valve Plate Assembly	GC1162	2	2	2	2	2	2	2	2	2	2	2	2	2
20	Garket, Valve Plate	GKT373													
		GKT374	2	2				2	2	2	2				
		GKT375			2	2	2					2	2	2	2
21	Tee	GA1612	1	1	1	1	1	1	1	1	1	1	1	1	1
22	Cap	0212P02	3	3	3	3	3	3	3	3	3	3	3	3	3
23	Plug	055P61	2	2	2	2	2	2	2	2	2	2	2	2	2
24	Retainer, Sight Glass	GB1091	1	1	1	1	1	1	1	1	1	1	1	1	1
25	Screw, Retainer	011P11	4	4	4	4	4	4	4	4	4	4	4	4	4
26	Sight Glass	GA1228	1	1	1	1	1	1	1	1	1	1	1	1	1
27	Gasket, Sight Glass	GA1233	2	2	2	2	2	2	2	2	2	2	2	2	2
28	Rod, Connecting A	ROD79						4	4	4	4	4	4	4	4
	Rod, Connecting B	GC1156	4	4	4	4	4								
29	Piston	GB1001			4	4	4					4	4	4	4
		GB1002													
		GB1003	4	4				4	4	4	4				

†Deleted from current production. See page 6 for comparable replacement compressor.

**Field replacement of bearings require line boring. Refer to National Service Bulletin SR116.

*Not available as separate item.

D-LINE 4 CYLINDER DIRECT DRIVE COMPRESSORS
CURRENT PRODUCTION MODELS CONTINUED

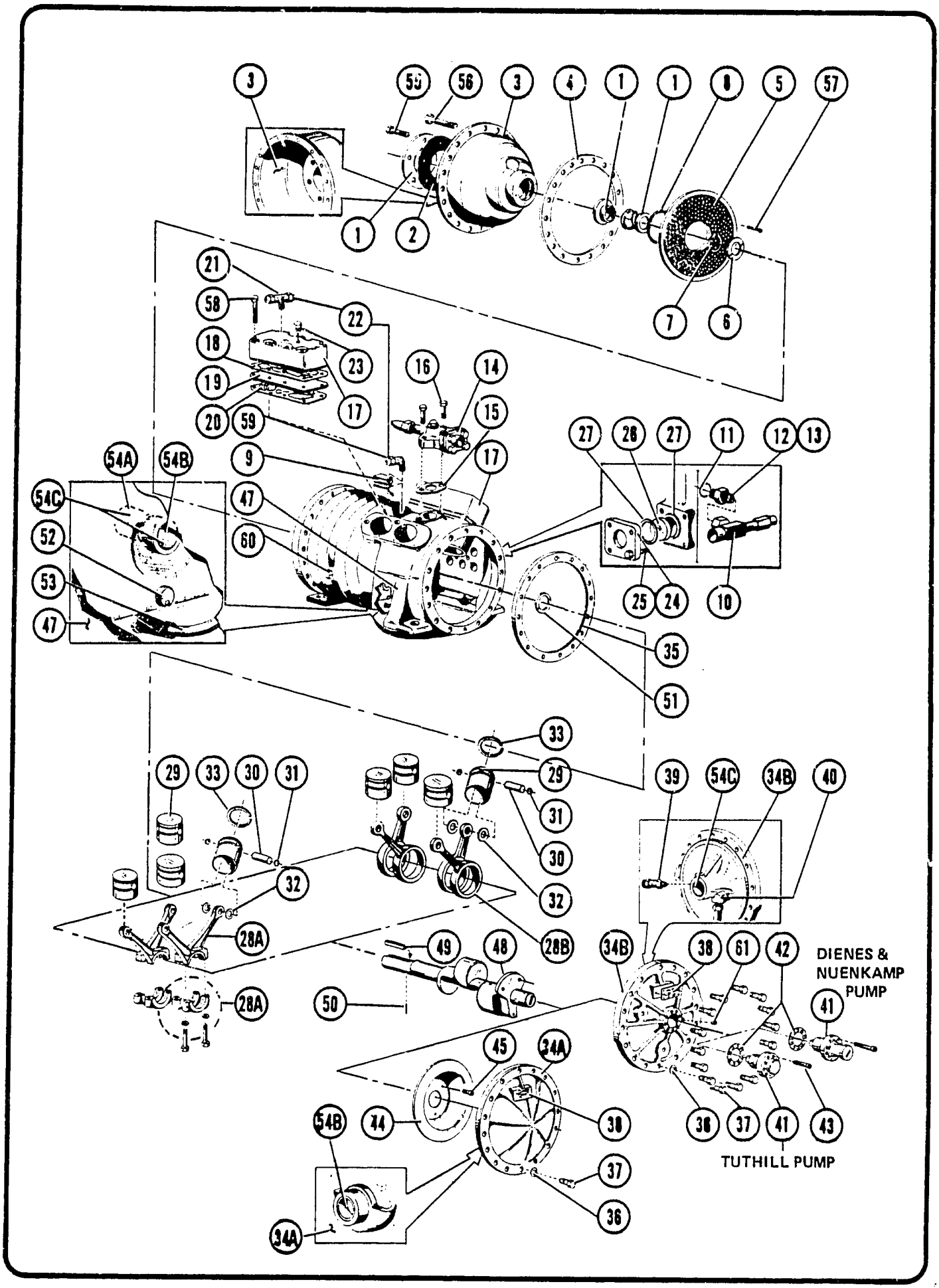

D-LINE 4 CYLINDER DIRECT DRIVE COMPRESSORS
CURRENT PRODUCTION MODELS CONTINUED

			60 HZ.																	50 HZ.													
		SPECIFICATIONS: DISPL. (CFH)	930		1128			1356				1680				2000				940		1128			1400				1667				
		BORE X STROKE (IN)	$1\frac{13}{16} \times 1\frac{1}{2}$		$2 \times 1\frac{1}{2}$			$2\frac{3}{16} \times 1\frac{1}{2}$				$2 \times 2\frac{3}{16}$				$2\frac{3}{16} \times 2\frac{3}{16}$				$2 \times 1\frac{1}{2}$		$2\frac{3}{16} \times 1\frac{1}{2}$			$2 \times 2\frac{3}{16}$				$2\frac{3}{16} \times 2\frac{3}{16}$				
		COMP. MODEL	30DC/ELF	50DCF	30DL	50DH/LF	75DHF	30DEL †	50DC/ELF	75DCF	100DPHF	51DPL	76DPH/C/ELF †	101DPCF †	111DPHF/CF	51DPEL†	77DPH/C/ELF	151DPHF/CF	30DC5/ELF5	50DCF5	30DL5	50DHF/LF5	75DHF5	31DPEL5 †	51DPH5/C5/ELF5†	76DPCF5 †	101DPHF5/CF5	51DPL5†	76DPH5/C5/ELF5†	101DPCF5	111DPHF5/CF5	
	DESCRIPTION	PART NO.	QUANTITY PER MODEL																														
30	Piston, Pin*	PIN39	4	4																													
		PIN40			4	4	4					4	4	4	4				4	4				4	4	4	4					
		PIN41						4	4	4	4					4	4	4			4	4	4					4	4	4	4	
31	Retainer, Piston Pin	0580P11	8	8	8	8	8	8	8	8	8	8	8	8	8	8	8	8	8	8	8	8	8	8	8	8	8	8	8	8	8	
32	Washer, Piston	GA1013	8	3	8	8	8	8	8	8	8	8	8	8	8	8	8	8	8	8	8	8	8	8	8	8	8	8	8	8	8	
33	Ring, Piston	GA1014						4	4	4	4					4	4	4			4	4	4					4	4	4	4	
		GA1026			4	4	4					4	4	4	4				4	4				4	4	4	4					
		GA1027	4	4																												
34	Cover, End A	GD1047T1	1	1	1	1	1	1	1	1									1	1	1	1	1									
	Cover, End B	GD1218T1										1	1	1	1	1	1	1						1	1	1	1	1	1	1	1	
		GD1218T2									1																					
35	Gasket, End Cover	GA1209	1	1	1	1	1	1	1	1	1	1	1	1	1	1	1	1	1	1	1	1	1	1	1	1	1	1	1	1	1	
36	Seal, Screw	GKT342	1	1	1	1	1	1	1	1	1	1	1	1	1	1	1	1	1	1	1	1	1	1	1	1	1	1	1	1	1	
37	Screw, End Cover	012P13	16	16	16	16	16	16	16	16	16	16	16	16	16	16	16	16	16	16	16	16	16	16	16	16	16	16	16	16	16	
38	I.D. Tag	—	1	1	1	1	1	1	1	1	1	1	1	1	1	1	1	1	1	1	1	1	1	1	1	1	1	1	1	1	1	
39	Valve, Pressure Relief	GA1581									1	1	1	1	1	1	1	1					1	1	1	1	1	1	1	1	1	
40	Elbow, Connecting	051P36									1	1	1	1	1	1	1	1					1	1	1	1	1	1	1	1	1	
		051P52	1	1	1	1	1	1	1	1									1	1	1	1	1									
41	Pump, Oil	PMP85A									1	1	1	1	1	1	1	1						1	1	1	1	1	1	1	1	
42	Gasket, Oil Pump	GKT312									1	1	1	1	1	1	1	1						1	1	1	1	1	1	1	1	
43	Screw, Oil Pump	034P10									8	8	8	8	8	8	8	8						8	8	8	8	8	8	8		
44	Slinger, Oil	GC1146T1	1	1	1	1	1	1	1	1									1	1	1	1	1									
45	Screw, Slinger	SCR30	3	3	3	3	3	3	3	3									3	3	3	3	3									
47	Crankcase*	CCS46T1	1	1																												
		CCS46T2			1	1	1												1	1												
		CCS46T3						1	1	1	1										1	1	1									
		CCS46T4										1	1	1	1									1	1	1						
		CCS46T5														1	1	1									1	1	1	1	1	
48	Crankshaft	CKS56T2										1	1	1	1	1	1	1						1	1	1	1	1	1	1	1	
		GD1151	1	1	1	1	1	1	1	1	1								1	1	1	1	1									
49	Key, Shaft	KIT369	1	1	1	1	1	1	1	1	1	1	1	1	1	1	1	1	1	1	1	1	1	1	1	1	1	1	1	1	1	
50	Pin, Spring	PIN80T3	1	1	1	1	1	1	1	1	1	1	1	1	1	1	1	1	1	1	1	1	1	1	1	1	1	1	1	1	1	
51	Washer, Inner Thrust	GA1966	1	1	1	1	1	1	1	1	1								1	1	1	1	1									
		GA1969										1	1	1	1	1	1	1						1	1	1	1	1	1	1	1	
52	Valve, Foam Control	VAL496	1	1	1	1	1	1	1	1	1	1	1	1	1	1	1	1	1	1	1	1	1	1	1	1	1	1	1	1	1	
53	Strainer, Oil Assem.	GB1381									1	1	1	1	1	1	1	1						1	1	1	1	1	1	1	1	
54	Bearing** A	BRG123										1	1	1	1	1	1	1						1	1	1	1	1	1	1	1	
	Bearing** B	GA1550										2	2	2	2	2	2	2						2	2	2	2	2	2	2	2	
	Bearing** C	GA1554	3	3	3	3	3	3	3	3	3								3	3	3	3	3									
55	Bolt, Seal Plate	012P11	6	6	6	6	6	6	6	6	6	6	6	6	6	6	6	6	6	6	6	6	6	6	6	6	6	6	6	6	6	
56	Bolt, Seal Housing	012P13	16	16	16	16	16	16	16	16	16	16	16	16	16	16	16	16	16	16	16	16	16	16	16	16	16	16	16	16	16	
57	Screw, Filter	0533P09	4	4	4	4	4	4	4	4	4	4	4	4	4	4	4	4	4	4	4	4	4	4	4	4	4	4	4	4	4	
58	Screw, Head	012P27	18	18	18	18	18	18	18	18	18	18	18	18	18	18	18	18	18	18	18	18	18	18	18	18	18	18	18	18	18	
59	Elbow, Crankcase	072P01	1	1	1	1	1	1	1	1	1	1	1	1	1	1	1	1	1	1	1	1	1	1	1	1	1	1	1	1	1	
60	Plug, Crankcase	055P62	1	1	1	1	1	1	1	1	1	1	1	1	1	1	1	1	1	1	1	1	1	1	1	1	1	1	1	1	1	
61	Plug, End Cover	055P71	2	2	2	2	2	2	2	2	2	2	2	2	2	2	2	2	2	2	2	2	2	2	2	2	2	2	2	2	2	

†Deleted from current production. See page 6 for comparable replacement compressor.
**Field replacement of bearings require line boring. Refer to National Service Bulletin SR116.
*Not available as separate item.

310

D-LINE 6 CYLINDER DIRECT DRIVE COMPRESSORS
CURRENT PRODUCTION MODELS

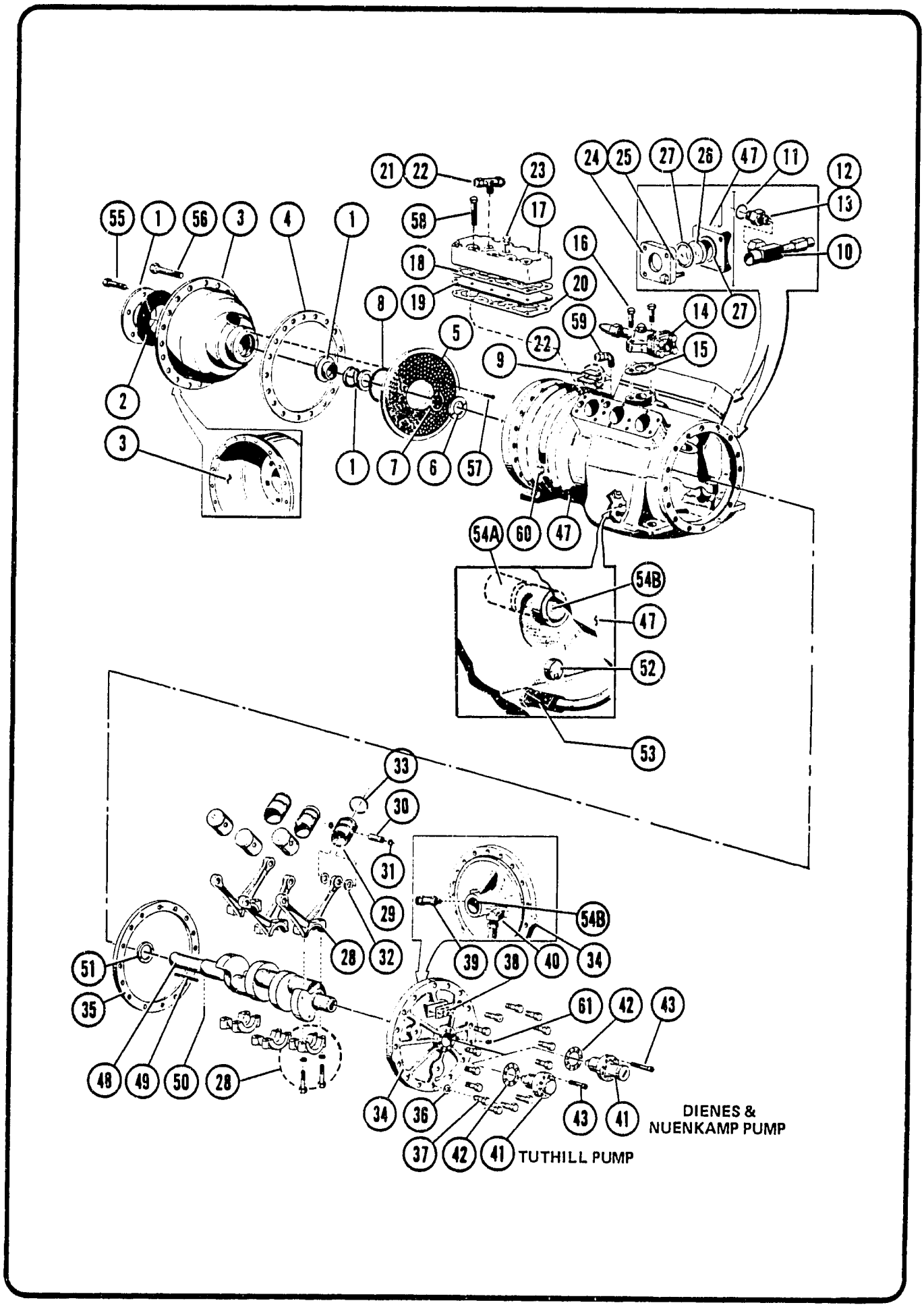

D-LINE 6 CYLINDER DIRECT DRIVE COMPRESSORS
CURRENT PRODUCTION MODELS

			60 HZ.							50 HZ.					
		SPECIFICATIONS: DISPL. (CFH)	2500				2997			2083			2500		
		SPECIFICATIONS: BORE X STROKE (IN)	2 x 2 3/16				2 3/16 x 2 3/16			2 x 2 3/16			2 3/16 x 2 3/16		
		SPECIFICATIONS: COMP. MODEL	201DPHF/CF	151DPCF	101DPH/C/ELF	76DPL	204DPHF/CF	154DPH/C/ELF	101DPL †	151DPHF5/CF5	77DPH5/C5/ELF5	51DPEL5 †	201DPHF5/CF5	101DPH5/C5/ELF5	76DPL5 †
	DESCRIPTION	PART NO.	QUANTITY PER MODEL												
1	Seal Assembly	GB1203	1	1	1	1	1	1	1	1	1	1	1	1	1
2	Gasket	GA1478	1	1	1	1	1	1	1	1	1	1	1	1	1
3	Seal, Housing	GD1200	1	1	1	1	1	1	1	1	1	1	1	1	1
4	Gasket, Seal Housing	GA1209	2	2	2	2	2	2	2	2	2	2	2	2	2
5	Filter, Suction	FLR32	1	1	1	1	1	1	1	1	1	1	1	1	1
6	Washer, Outer Thrust	GA1968	1	1	1	1	1	1	1	1	1	1	1	1	1
7	Retainer, Thrust Washer	0693P01	1	1	1	1	1	1	1	1	1	1	1	1	1
8	O Ring	RNG292	1	1	1	1	1	1	1	1	1	1	1	1	1
9	Tag, I.D.		1	1	1	1	1	1	1	1	1	1	1	1	1
10	Valve, Suction Service	GA424	1	1	1	1	1	1	1	1	1	1	1	1	1
11	Gasket, Suction Valve	GA431	1	1	1	1	1	1	1	1	1	1	1	1	1
12	Adapter, Valve	GA461T1	1	1	1	1	1	1	1	1	1	1	1	1	1
13	Adaptor, O-Ring	RNG112	1	1	1	1	1	1	1	1	1	1	1	1	1
14	Valve, Discharge Service	VAL373	1	1	1	1	1	1	1	1	1	1	1	1	1
15	Gasket, Discharge Valve	GKT340	1	1	1	1	1	1	1	1	1	1	1	1	1
16	Screw, Discharge Valve	014P17	2	2	2	2	2	2	2	2	2	2	2	2	2
17	Head, Valve RH	GD1189	1	1	1	1	1	1	1	1	1	1	1	1	1
	Head, Valve LH	GD1190	1	1	1	1	1	1	1	1	1	1	1	1	1
18	Gasket, Head	GC1150	(2) ALL MODELS SEE PAGE 45 & 46												
19	Valve Plate Assembly	PLT2001A													
20	Gasket, Valve Plate	GKT376	2	2	2	2				2	2	2			
		GKT377					2	2	2				2	2	2
21	Tee	GA1612	1	1	1	1	1	1	1	1	1	1	1	1	1
22	Cap	0212P02	2	2	2	2	2	2	2	2	2	2	2	2	2
23	Plug	055P61	1	1	1	1	1	1	1	1	1	1	1	1	1
24	Retainer, Sight Glass	GB1091	1	1	1	1	1	1	1	1	1	1	1	1	1
25	Screw, Retainer	011P11	4	4	4	4	4	4	4	4	4	4	4	4	4

†Deleted from current production. See page 6 for comparable replacement compressor.

D-LINE 6 CYLINDER DIRECT DRIVE COMPRESSORS
CURRENT PRODUCTION MODELS CONTINUED

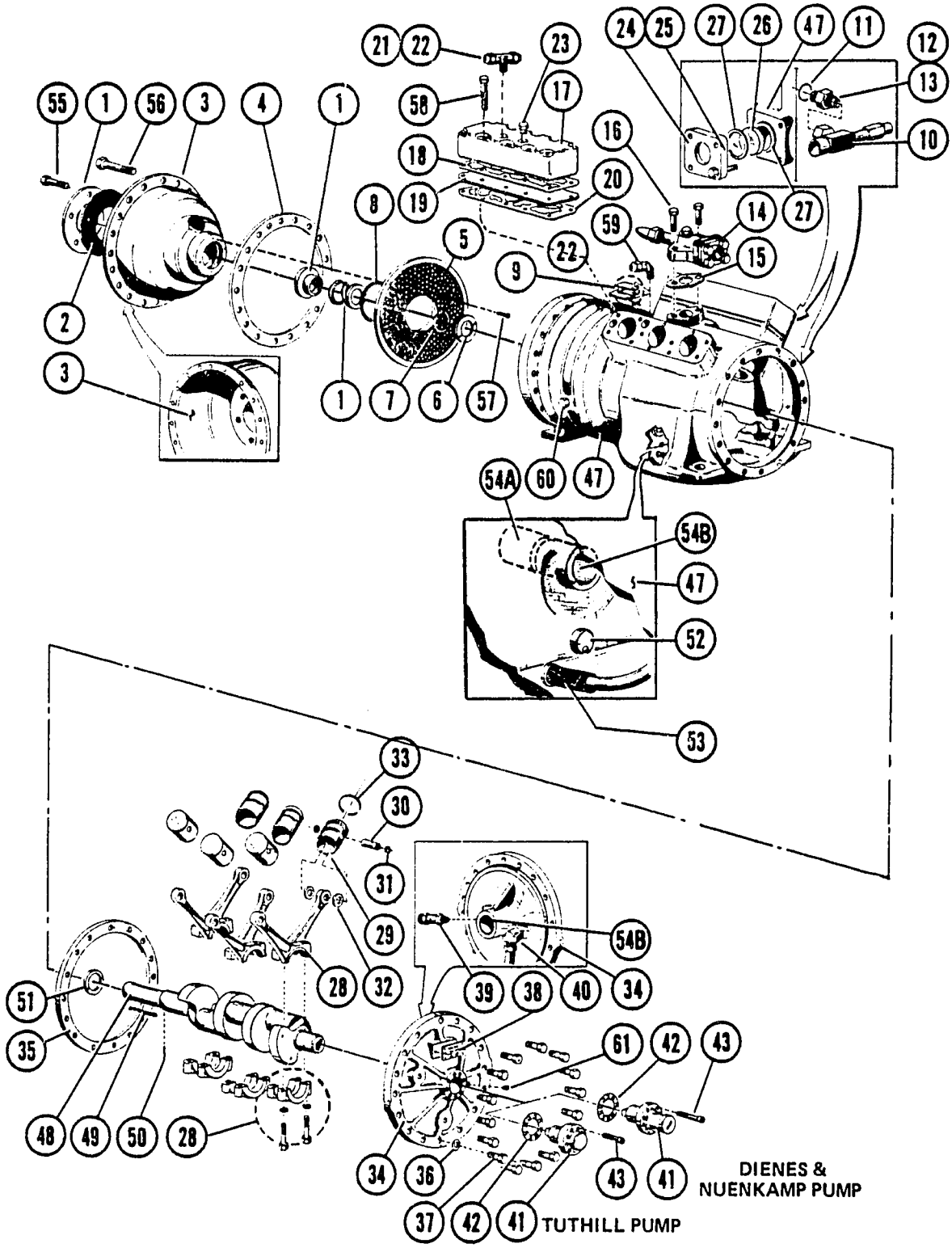

D-LINE 6 CYLINDER DIRECT DRIVE COMPRESSORS
CURRENT PRODUCTION MODELS CONTINUED

			60 HZ.							50 HZ.					
		SPECIFICATIONS: DISPL. (CFH)	2500				2997			2083			2500		
		SPECIFICATIONS: BORE X STROKE (IN)	2 x 2 3/16				2 3/16 x 2 3/16			2 x 2 3/16			2 3/16 x 2 3/16		
		SPECIFICATIONS: COMP. MODEL	201DPHF/CF	151DPCF	101DPH/C/ELF	76DPL	204DPHF/CF	154DPH/C/ELF	101DPL †	151DPHF6/CF5	77DPH5/C5/ELF5	51DPEL5 †	201DPHF5/CF5	101DPH5/C5/ELF5	76DPL5 †
	DESCRIPTION	PART NO.	QUANTITY PER MODEL												
26	Sight Glass	GA1228	1	1	1	1	1	1	1	1	1	1	1	1	1
27	Gasket, Sight Glass	GA1233	2	2	2	2	2	2	2	2	2	2	2	2	2
28	Rod, Connecting	ROD79	6	6	6	6	6	6	6	6	6	6	6	6	6
29	Piston	GB1001				6	6	6	6				6	6	6
		GB1003	6	6	6					6	6	6			
30	Piston, Pin *	PIN40	6	6	6					6	6	6			
		PIN41				6	6	6	6				6	6	6
31	Retainer, Piston Pin	0580P11	12	12	12	12	12	12	12	12	12	12	12	12	12
32	Washer, Piston	GA1013	12	12	12	12	12	12	12	12	12	12	12	12	12
33	Ring, Piston	GA1014				6	6	6	6				6	6	6
		GA1026	6	6	6					6	6	6			
34	Cover, Pump End	GD1218T1	1	1	1	1	1	1	1	1	1	1	1	1	1
35	Gasket, End Cover	GA1209	1	1	1	1	1	1	1	1	1	1	1	1	1
36	Seal, Screw	GKT342	1	1	1	1	1	1	1	1	1	1	1	1	1
37	Screw, End Cover	012P13	16	16	16	16	16	16	16	16	16	16	16	16	16
38	I.D. Tag	—	1	1	1	1	1	1	1	1	1	1	1	1	1
39	Valve, Pressure Relief	GA1581	1	1	1	1	1	1	1	1	1	1	1	1	1
40	Elbow, Connecting	051P36	1	1	1	1	1	1	1	1	1	1	1	1	1
41	Pump, Oil	PMP85A	1	1	1	1	1	1	1	1	1	1	1	1	1
42	Gasket, Oil Pump	GKT312	1	1	1	1	1	1	1	1	1	1	1	1	1
43	Screw, Oil Pump	034P10	8	8	8	8	8	8	8	8	8	8	8	8	8
47	Crankcase *	CCS75AT3	1	1	1					1	1	1			
		CCS75AT4				1	1	1	1				1	1	1
48	Crankshaft	CKS53T2	1	1	1	1	1	1	1	1	1	1	1	1	1
49	Key, Shaft	KIT369	1	1	1	1	1	1	1	1	1	1	1	1	1
50	Pin, Spring	PIN80T3	1	1	1	1	1	1	1	1	1	1	1	1	1
51	Washer, Inner Thrust	GA1969	1	1	1	1	1	1	1	1	1	1	1	1	1
52	Valve, Foam Control	VAL496	1	1	1	1	1	1	1	1	1	1	1	1	1
53	Strainer, Oil Assem.	GB1381	1	1	1	1	1	1	1	1	1	1	1	1	1
54	Bearing ** A	BRG123	1	1	1	1	1	1	1	1	1	1	1	1	1
		B GA1550	2	2	2	2	2	2	2	2	2	2	2	2	2
55	Bolt, Seal Plate	012P11	6	6	6	6	6	6	6	6	6	6	6	6	6
56	Bolt, Seal Housing	012P13	16	16	16	16	16	16	16	16	16	16	16	16	16
57	Filter Screw	0533P09	4	4	4	4	4	4	4	4	4	4	4	4	4
58	Screw, Head	012P27	20	20	20	20	20	20	20	20	20	20	20	20	20
59	Elbow, Crankcase	072P01	1	1	1	1	1	1	1	1	1	1	1	1	1
60	Plug, Crankcase	055P62	1	1	1	1	1	1	1	1	1	1	1	1	1
61	Plug End Cover	055P71	2	2	2	2	2	2	2	2	2	2	2	2	2

†Deleted from current production. See page 6 for comparable replacement compressor.
**Field replacement of bearings require line boring. Refer to National Service Bulletin SR116.
*Not available as separate item.

D-LINE 6 CYLINDER DIRECT DRIVE COMPRESSORS
OUT OF PRODUCTION MODELS

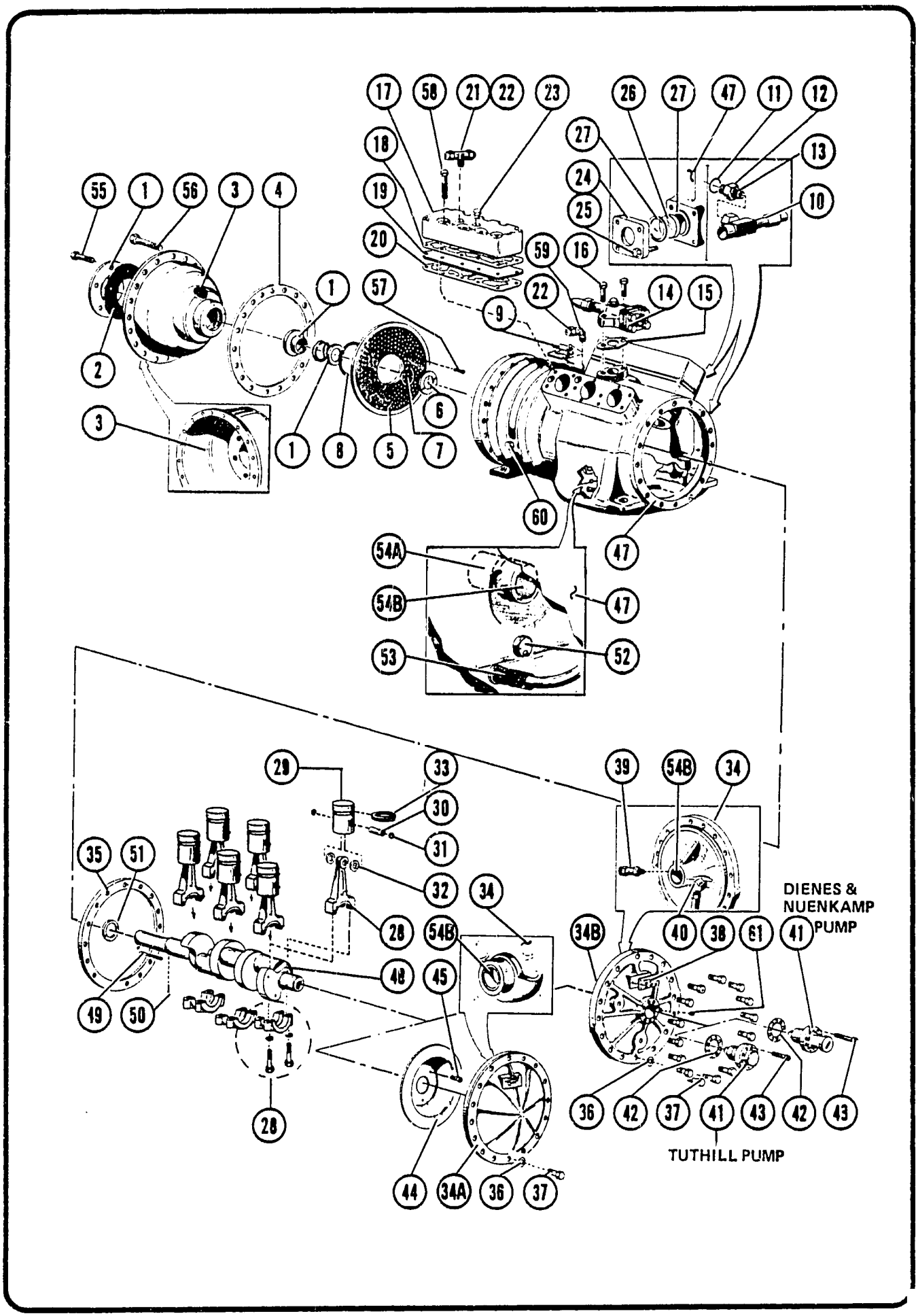

D-LINE 6 CYLINDER DIRECT DRIVE COMPRESSORS
OUT OF PRODUCTION MODELS

			60 HZ.										50 HZ.									
		SPECIFICATIONS: DISPL. (CFM)	1698			2034			2412				1410				1698				2010	
		SPECIFICATIONS: BORE X STROKE (IN)	2 x 1 1/2			2 3/16 x 1 1/2			2 3/16 x 1 49/64				2 x 1 1/2				2 3/16 x 1 1/2				2 3/16 x 1 49/64	
		SPECIFICATIONS: COMP. MODEL	50DL	75DH/LF	100DPCF	50DPEL	75DPC/ELF	150DPHF	75DPL	100DPH/ELF	150DPCF	200DPHF	30DEL5	50DC5/ELF5	75DCF5	100DPHF5	50DPL5	75DPH5/LF5	100DPCF5	50DPEL5	75DPL5/ELF5	150DPHF5
	DESCRIPTION	PART NO.	QUANTITY PER MODEL																			
1	Seal Assembly	GB1203	1	1	1	1	1	1	1	1	1	1	1	1	1	1	1	1	1	1	1	1
2	Gasket	GA1478	1	1	1	1	1	1	1	1	1	1	1	1	1	1	1	1	1	1	1	1
3	Seal, Housing	GD1200	1	1	1	1	1	1	1	1	1	1	1	1	1	1	1	1	1	1	1	1
4	Gasket, Seal Housing	GA1209	2	2	2	2	2	2	2	2	2	2	2	2	2	2	2	2	2	2	2	2
5	Filter, Suction	FLR32	1	1	1	1	1	1	1	1	1	1	1	1	1	1	1	1	1	1	1	1
6	Washer, Outer Thrust	GA1968	1	1	1	1	1	1	1	1	1	1	1	1	1	1	1	1	1	1	1	1
7	Retainer, Thrust Washer	0693P01	1	1	1	1	1	1	1	1	1	1	1	1	1	1	1	1	1	1	1	1
8	O Ring	RNG292	1	1	1	1	1	1	1	1	1	1	1	1	1	1	1	1	1	1	1	1
9	Tag, I.D.	—	1	1	1	1	1	1	1	1	1	1	1	1	1	1	1	1	1	1	1	1
10	Valve, Suction Service	GA424	1	1	1	1	1	1	1	1	1	1	1	1	1	1	1	1	1	1	1	1
11	Gasket, Suction Valve	GA431	1	1	1	1	1	1	1	1	1	1	1	1	1	1	1	1	1	1	1	1
12	Adapter, Valve	GA461T1	1	1	1	1	1	1	1	1	1	1	1	1	1	1	1	1	1	1	1	1
13	Adaptor, O-Ring	RNG112	1	1	1	1	1	1	1	1	1	1	1	1	1	1	1	1	1	1	1	1
14	Valve, Discharge Service	VAL373	1	1	1	1	1	1	1	1	1	1	1	1	1	1	1	1	1	1	1	1
15	Gasket, Discharge Valve	GKT340	1	1	1	1	1	1	1	1	1	1	1	1	1	1	1	1	1	1	1	1
16	Screw, Discharge Valve	014P17	2	2	2	2	2	2	2	2	2	2	2	2	2	2	2	2	2	2	2	2
17	Head, Valve RH	GD1189	1	1	1	1	1	1	1	1	1	1	1	1	1	1	1	1	1	1	1	1
	Head, Valve LH	GD1190	1	1	1	1	1	1	1	1	1	1	1	1	1	1	1	1	1	1	1	1
18	Gasket, Head	GC1150	2	2	2	2	2	2	2	2	2	2	2	2	2	2	2	2	2	2	2	2
19	Valve Plate Assembly	PLT2001A	2	2	2	2	2	2	2	2	2	2	2	2	2	2	2	2	2	2	2	2
20	Gasket, Valve Plate	GKT376	2	2	2								2	2	2	2						
		GKT377				2	2	2	2	2	2	2					2	2	2	2	2	2
21	Tee	GA1612	1	1	1	1	1	1	1	1	1	1	1	1	1	1	1	1	1	1	1	1
22	Cap	0212P02	2	2	2	2	2	2	2	2	2	2	2	2	2	2	2	2	2	2	2	2
23	Plug	055P61	1	1	1	1	1	1	1	1	1	1	1	1	1	1	1	1	1	1	1	1
24	Retainer, Sight Glass	GB1091	1	1	1	1	1	1	1	1	1	1	1	1	1	1	1	1	1	1	1	1
25	Screw, Retainer	011P11	4	4	4	4	4	4	4	4	4	4	4	4	4	4	4	4	4	4	4	4
26	Sight Glass	GA1228	1	1	1	1	1	1	1	1	1	1	1	1	1	1	1	1	1	1	1	1
27	Gasket, Sight Glass	GA1233	2	2	2	2	2	2	2	2	2	2	2	2	2	2	2	2	2	2	2	2
28	Rod, Connecting	ROD43	6	6	6	6	6	6					6	6	6	6	6	6	6			
		GD1226							6	6	6	6								6	6	6

D-LINE 6 CYLINDER DIRECT DRIVE COMPRESSORS
OUT OF PRODUCTION MODELS CONTINUED

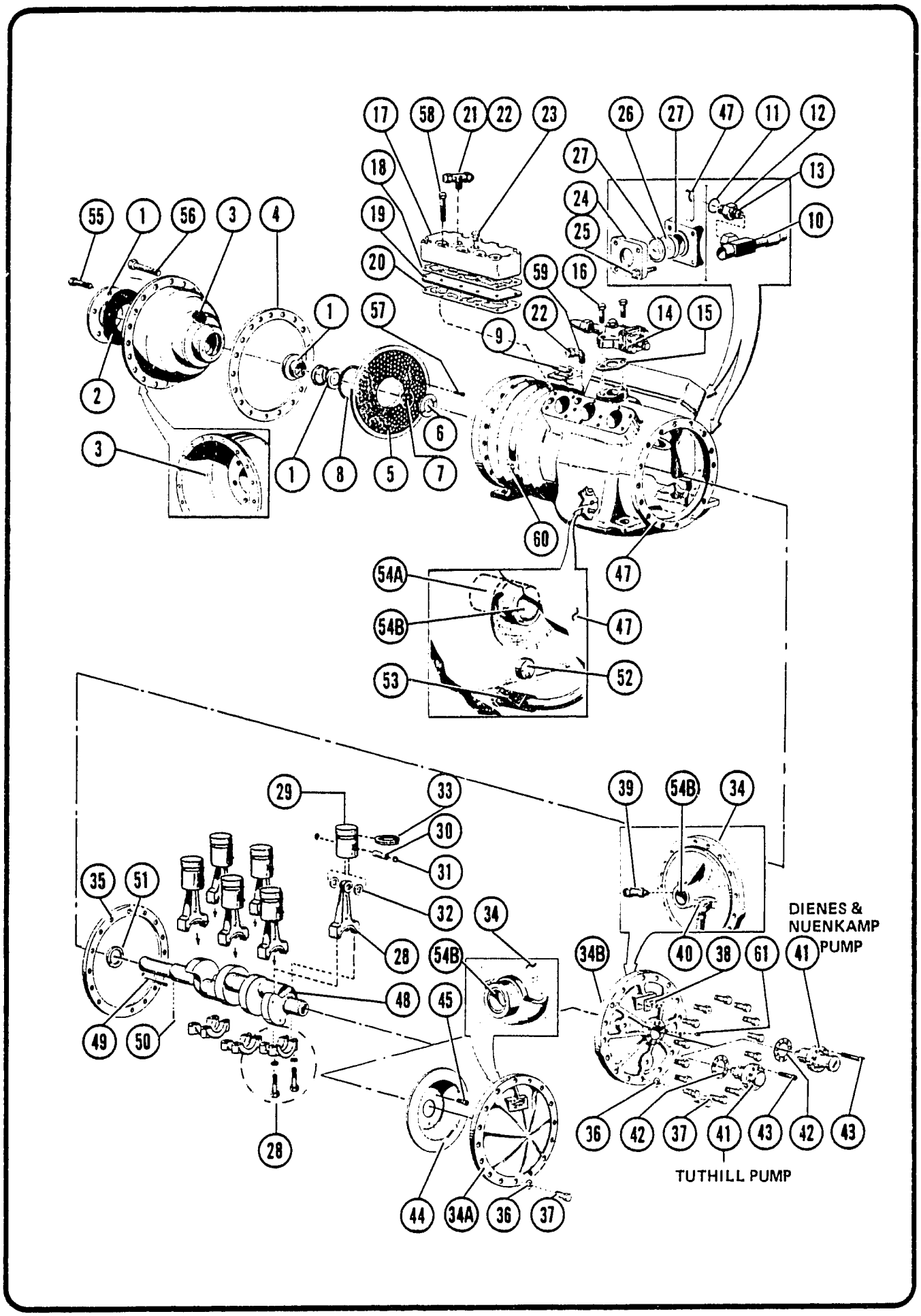

D-LINE 6 CYLINDER DIRECT DRIVE COMPRESSORS
OUT OF PRODUCTION MODELS CONTINUED

				60 HZ.										50 HZ.									
			SPECIFICATIONS: DISPL. (CFM)	1698			2034			2412				1410				1698			2010		
			SPECIFICATIONS: BORE X STROKE (IN)	2 x 1 1/2			2 3/16 x 1 1/2			2 3/16 x 1 49/64				2 x 1 1/2				2 3/16 x 1 1/2			2 3/16 x 1 49/64		
			SPECIFICATIONS: COMP. MODEL	50DL	75DH/LF	100DPCF	50DPEL	75DPC/ELF	150DPHF	75DPL	100DPH/ELF	150DPCF	200DPHF	30DEL5	50DC5/ELF5	75DCF5	100DPHF5	50DPL5	75DPH5/LF5	100DPCF5	50 DPEL5	75DPL5/ELF5	150DPHF5
	DESCRIPTION		PART NO.	QUANTITY PER MODEL																			
29	Piston		GB1001				6	6	6	6	6	6	6					6	6	6	6	6	6
			GB1003	6	6	6								6	6	6	6						
30	Piston, Pin *		PIN40	6	6	6								6	6	6	6						
			PIN41				6	6	6	6	6	6	6					6	6	6	6	6	6
31	Retainer, Piston Pin		0580P11	12	12	12	12	12	12	12	12	12	12	12	12	12	12	12	12	12	12	12	12
32	Washer, Piston		GA1013	12	12	12	12	12	12	12	12	12	12	12	12	12	12	12	12	12	12	12	12
33	Ring, Piston		GA1014				6	6	6	6	6	6	6					6	6	6	6	6	6
			GA1026	6	6	6								6	6	6	6						
34	Cover, Pump End	A	GD1047T3	1	1									1	1	1							
		B	GD1218T1			1	1	1	1	1	1	1	1				1	1	1	1	1	1	1
35	Gasket, End Cover		GA1209	1	1	1	1	1	1	1	1	1	1	1	1	1	1	1	1	1	1	1	1
36	Seal, Screw		GKT342	1	1	1	1	1	1	1	1	1	1	1	1	1	1	1	1	1	1	1	1
37	Screw, End Cover		012P13	16	16	16	16	16	16	16	16	16	16	16	16	16	16	16	16	16	16	16	16
38	I.D. Tag		—	1	1	1	1	1	1	1	1	1	1	1	1	1	1	1	1	1	1	1	1
39	Valve, Pressure Relief		GA1581			1	1	1	1	1	1	1	1				1	1	1	1	1	1	1
40	Elbow, Connecting		051P36			1	1	1	1	1	1	1	1				1	1	1	1	1	1	1
41	Pump, Oil		PMP85A			1	1	1	1	1	1	1	1				1	1	1	1	1	1	1
42	Gasket, Oil Pump		GKT312			1	1	1	1	1	1	1	1				1	1	1	1	1	1	1
43	Screw, Oil Pump		034P10			8	8	8	8	8	8	8	8				8	8	8	8	8	8	8
44	Slinger, Oil		GC1146T2	1	1									1	1	1							
45	Screw, Slinger		SCR30	3	3									3	3	3							
47	Crankcase *		CCS47T1	1	1	1								1	1	1	1						
			CCS47T2				1	1	1									1	1	1			
			GE1083							1	1	1	1								1	1	1
48	Crankshaft		CKS34	1	1	1	1	1	1					1	1	1	1	1	1	1			
			GD1227							1	1	1	1								1	1	1
49	Key, Shaft		KIT369	1	1	1	1	1	1	1	1	1	1	1	1	1	1	1	1	1	1	1	1
50	Pin, Spring		PIN80T3	1	1	1	1	1	1	1	1	1	1	1	1	1	1	1	1	1	1	1	1
51	Washer, Inner Thrust		GA1969	1	1	1	1	1	1	1	1	1	1	1	1	1	1	1	1	1	1	1	1
52	Valve, Foam Control		VAL496	1	1	1	1	1	1	1	1	1	1	1	1	1	1	1	1	1	1	1	1
53	Strainer, Oil Assem.		GB1381	1	1	1	1	1	1	1	1	1	1	1	1	1	1	1	1	1	1	1	1
54	Bearing **	A	BRG123	1	1	1	1	1	1	1	1	1	1	1	1	1	1	1	1	1	1	1	1
		B	GA1550	2	2	2	2	2	2	2	2	2	2	2	2	2	2	2	2	2	2	2	2
55	Bolt, Seal Plate		012P11	6	6	6	6	6	6	6	6	6	6	6	6	6	6	6	6	6	6	6	6
56	Bolt, Seal Housing		012P13	16	16	16	16	16	16	16	16	16	16	16	16	16	16	16	16	16	16	16	16
57	Filter, Screw		SCR69	8	8	8	8	8	8	8	8	8	8	8	8	8	8	8	8	8	8	8	8
58	Screw, Head		012P27	20	20	20	20	20	20	20	20	20	20	20	20	20	20	20	20	20	20	20	20
59	Elbow, Crankcase		072P01	1	1	1	1	1	1	1	1	1	1	1	1	1	1	1	1	1	1	1	1
60	Plug, Crankcase		055P62	1	1	1	1	1	1	1	1	1	1	1	1	1	1	1	1	1	1	1	1
61	Plug, End Cover		055P71	2	2	2	2	2	2	2	2	2	2	2	2	2	2	2	2	2	2	2	2

**Field replacement of bearings require line boring. Refer to National Service Bulletin SR116.
*Not available as separate item.

D/B METIC AND D-LINE VALVE PLATE ASSEMBLIES
2, 3, 4 AND 6 CYLINDER MODELS

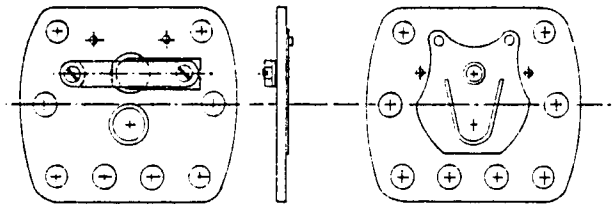

GB 160 - All 2 cylinder fractional compressors
Valve plate assembly 2 cylinder models.

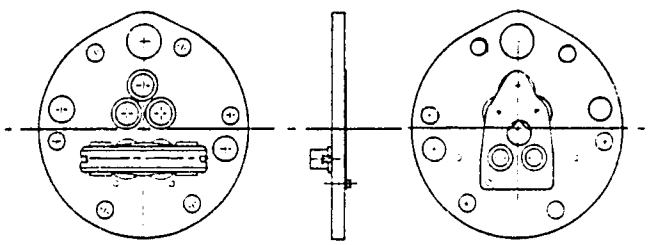

GB 1042 - All 2 cylinder integral compressors
Valve plate assembly 2 cylinder integral models.

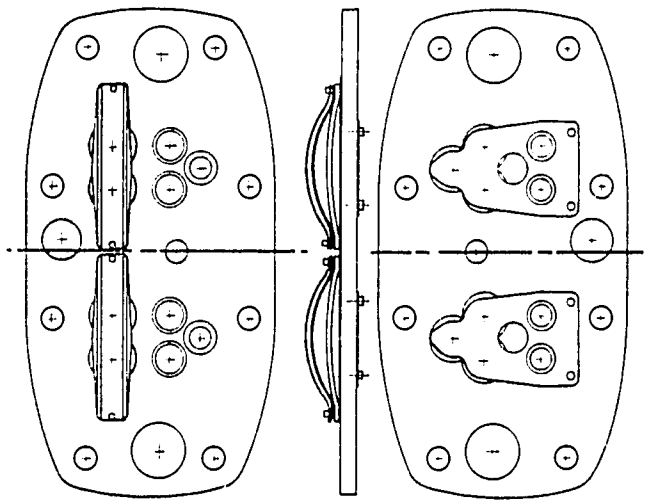

GC 1162 - Non-unloading compressor
Valve plate assembly for 3 and 4 cylinder models without unloading.

Unloading compressors
Valve plate is required as a right hand valve plate (facing motor) for all 3 and 4 cylinder models.

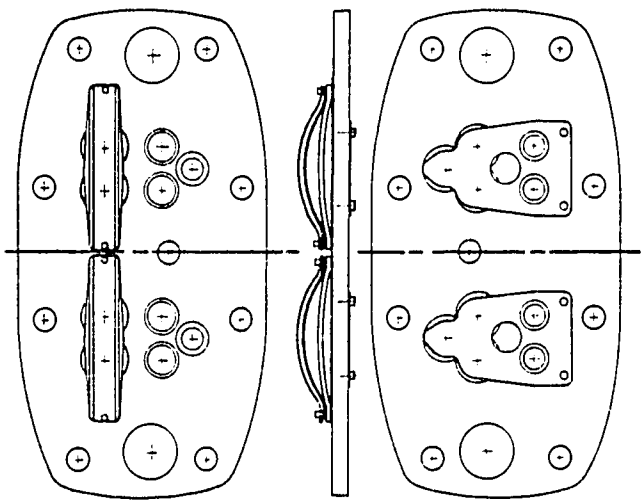

PLT 317A - Unloading plate
Valve plate assembly for all 3 and 4 cylinder models equipped with unloading. (1) per compressor on left hand side.

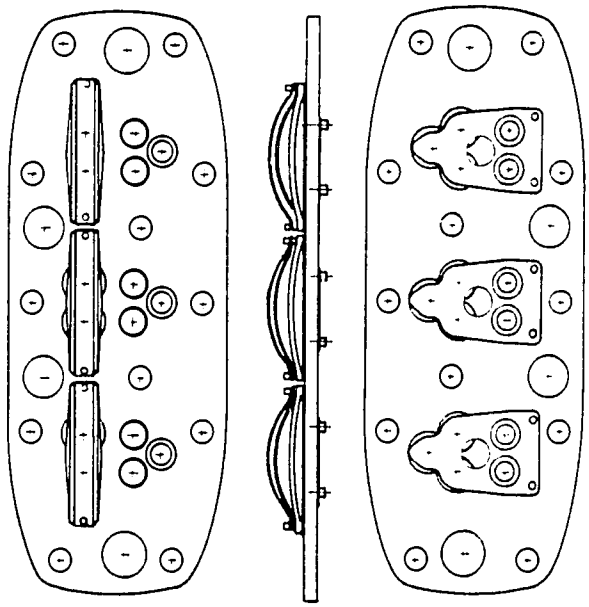

PLT 2001A - Non-unloading compressors
Valve plate required for all 6 cylinder compressors.

Unloading compressors
Valve plate required as a left hand valve plate (facing motor) for all 6 cylinder models.

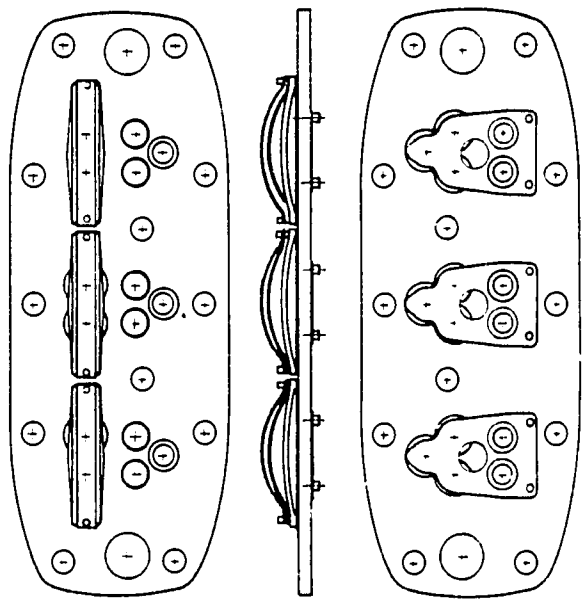

PLT 2002A - Unloading plate
Valve plate assembly for all 6 cylinder models equipped with unloading (1) per compressor located on right hand side of the compressor.

Note: See page 48 for unloader kit information;

D/B METIC AND D-LINE GASKETS—ALL MODELS

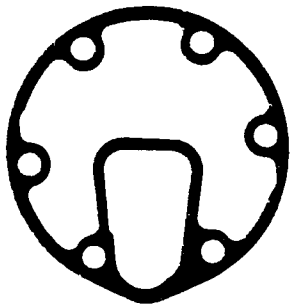

GKT 343
Head to plate, all 2 cylinder integral models.

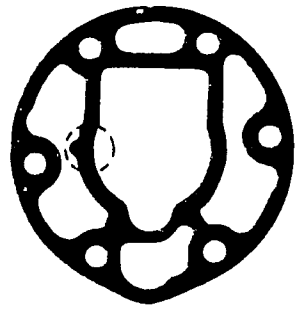

GKT 370
Deck to plate, all 2 cylinder integral models with $1^{13}/_{16}$" bore.

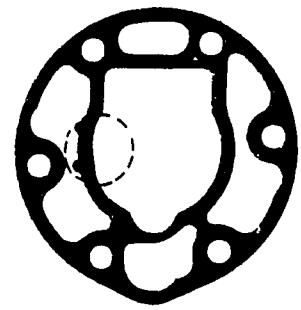

GKT 371
Deck to plate, all 2 cylinder integral models with 2" bore.

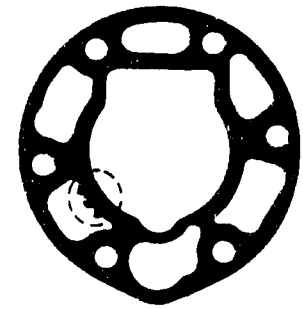

GKT 372
Deck to plate, all 2 cylinder integral models with $2^{3}/_{16}$" bore.

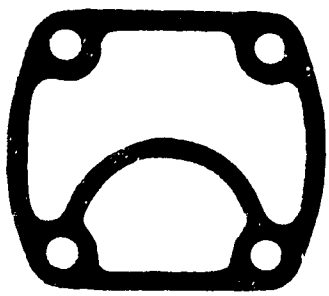

NB 3. Head to plate, all 2 cylinder fractional models.

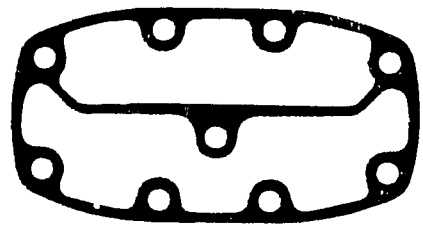

GB 1089. Head to plate, all 3 & 4 cylinder models.

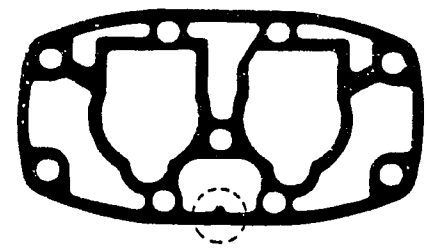

GKT 373. Deck to plate, all 3 & 4 cylinder models with $1^{13}/_{16}$" bore.

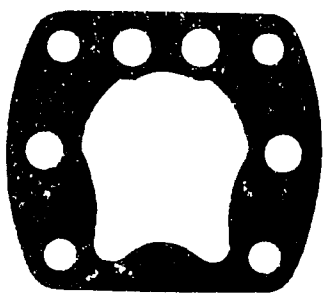

NB 4. Deck to plate, all 2 cylinder fractional models.

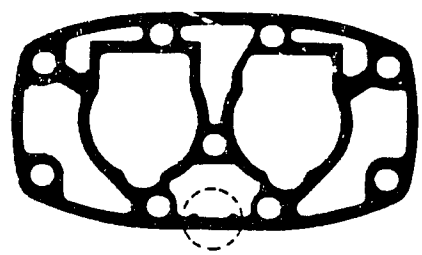

GKT 374. Deck to plate, all 3 & 4 cylinder models with 2" bore.

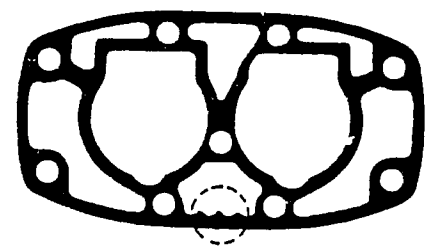

GKT 375. Deck to plate, all 3 & 4 cylinder models with $2^{3}/_{16}$" bore.

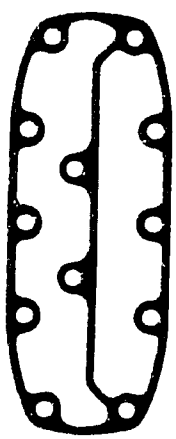

GC 1150
Head to plate, all 6 cylinder models.

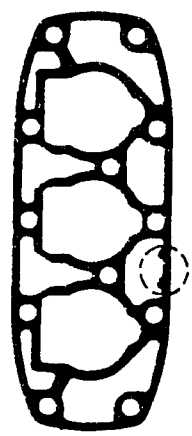

GKT 376
Deck to plate, all 6 cylinder models with 2" bore.

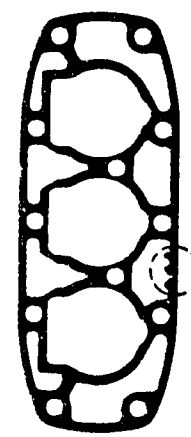

GKT 377
Deck to plate, all 6 cylinder models with $2^{3}/_{16}$" bore.

NOTE: Circled areas designate identifying tabs on gaskets.

D/B METIC HERMETIC COMPRESSORS ELECTRICAL ACCESSORIES

CYL.	HP	ELECTRICAL SERVICE	BOX ASSEMBLY NUMBER *	COVER	TERMINAL BOX	TERMINAL BLOCK	START RELAY	CAPACITORS START (QTY) RUN	KLIXON PART NUMBER	FRAME SIZE
2**	½	115-1-60 208/230-1-60 208/230-3-60	BOX4310A BOX4311A GB118	NB31 NB31 NB31	NC44 NC44 NC44	GB93 GB93 GB93	GB191T1 GB191T3 N/R	(1)NC54T11 (1)NB50T1(1)NC54T11 N/R	CONSULT ††† FACTORY	
	¾	115-1-60 208/230-1-60 208/230-3-60	BOX4309A BOX4311A GB285† GB304 GB286†	GB277 GB277 GB277	GC386 GC386 GC386	GB93 GB93 GB93	GB191T1 GB191T3 N/R	(1)NC54T11 (1)NB50T1(1)NC54T11 N/R	CONSULT ††† FACTORY	
	1	208/230-1-60 208/230-3-60	GB285 GB286	GB277 GB277	GC386 GC386	GB93 GB93	GB191T3 N/R	(1)NB50T1(1)NC54T11 N/R	CONSULT ††† FACTORY	
2	1½	208-1-60 230-1-60 208/230-3-60 460-3-60 575-3-60	BOX2511 BOX2511 BOX2512 BOX2513 BOX2510	COV110 COV110 COV110 COV110 COV110	BOX2867 BOX2867 BOX2867 BOX2867 BOX2867	GB93 GB93 GB93 GB93 GB93	GB126T4 GB126T4 N/R N/R N/R	(1)CPR18(1)CPR22 (1)CPR18(1)CPR22 N/R N/R N/R	GB1018T1 GB1018T1 GB1127T4 GB1127T5 N/R	6.29
	2	208-1-60 230-1-60 208/230-3-60 460-3-60 575-3-60	BOX2501 BOX2502 BOX2508 BOX2509 BOX2510	COV110 COV110 COV110 COV110 COV110	BOX2867 BOX2867 BOX2867 BOX2867 BOX2867	GB93 GB93 GB93 GB93 GB93	GB126T4 GB126T4 N/R N/R N/R	(1)CPR19(1)CPR23 (1)CPR19(1)CPR23 N/R N/R N/R	GB1018T3 GB1018T3 GB1127T4 GB1127T5 N/R	
	3	208-1-60 230-1-60 208/230-3-60 460-3-60 575-3-60	BOX2528 BOX2529 BOX2530 BOX2531 BOX2510	COV110 COV110 COV110 COV110 COV110	BOX2867 BOX2867 BOX2867 BOX2867 BOX2867	GB93 GB93 GB93 GB93 GB93	GB126T4 GB126T4 N/R N/R N/R	(2)CPR20(2)CPR22 (2)CPR20(2)CPR22 N/R N/R N/R	GB1019T2 GB1019T1 GB1127T1 GB1127T2 N/R	7.48
4	3	208-1-60 230-1-60 208/230-3-60 460-3-60 575-3-60	BOX2523 BOX2524 BOX2525 BOX2526 BOX2520	COV111 COV111 COV111 COV111 COV111	BOX2870 BOX2870 BOX2869 BOX2869 BOX2869	GA1207 GA1207 GA1207 GA1207 GA1207	GB126T4 GB126T4 N/R N/R N/R	(2)CPR20(2)CPR22 (2)CPR20(2)CPR22 N/R N/R N/R	GB1117T2 GB1117T1 GB1127T1 GB1127T2 N/R	8.77
3,4 6	5	208-1-60 230-1-60 208/230-3-60 460-3-60 575-3-60	BOX2514 BOX2564†† BOX2515 BOX2565†† BOX2566 BOX2567 BOX2520	COV111 COV111 COV111 COV111 COV111	BOX2871 BOX2871 BOX2870 BOX2870 BOX2870	GA1207 GA1207 GA1207 GA1207 GA1207	GB126T5 GB126T5 N/R N/R N/R	(2)CPR18(3)CPR22 (2)CPR18(3)CPR22 N/R N/R N/R	GB1128T2 GB1473T1†† GB1128T1 GB1473T2†† GB1126T5 GB1126T6 N/R	8.77
	7½	208/230-3-60 460-3-60 575-3-60	BOX2518 BOX2519 BOX2520	COV111 COV111 COV111	BOX2870 BOX2870 BOX2870	GA1207 GA1207 GA1207	N/R N/R N/R	N/R N/R N/R	GB1126T2 GB1126T4 N/R	
	10-22	208/230-3-60 460-3-60 575-3-60	BOX2521 BOX2521 BOX2521	COV111 COV111 COV111	BOX2872 BOX2872 BOX2872	GA1207 GA1207 GA1207	N/R N/R N/R	N/R N/R N/R	N/R N/R N/R	

†9HCL ONLY ††52HF ONLY N/R = NOT REQUIRED *INCLUDES TERMINAL BOX AND ALL COMPONENTS
**Valid for 5HCL, 8HCL, 9HCL, 10HCL, 11HCL only.

NOTES:
The above chart defines the correct Klixon selection for all new and rebuilt D/B-Metic compressors. The voltages listed reflect the current production designations, as used in West Hartford New Production. Some rebuilt machines may carry different voltage data, in accordance with the particular vintage motor design core used in the machine, but Klixon selection will remain the same.

i.e. 208/230-3-60 Same Klixon As 208/220, 240-3-60
460-3-60 Same Klixon As 440, 480-3-60

All replacement machines require a new Klixon. Due to possible Klixon usage changes, since original machine was put into service, and the possibility of damage to the Klixon during machine failure, it is **MANDATORY** that a new protector be installed on all replacement compressors. Failure to do this will result in compressor warranty being declared void.

††† Parts Department

UNLOADER KIT ACCESSORIES

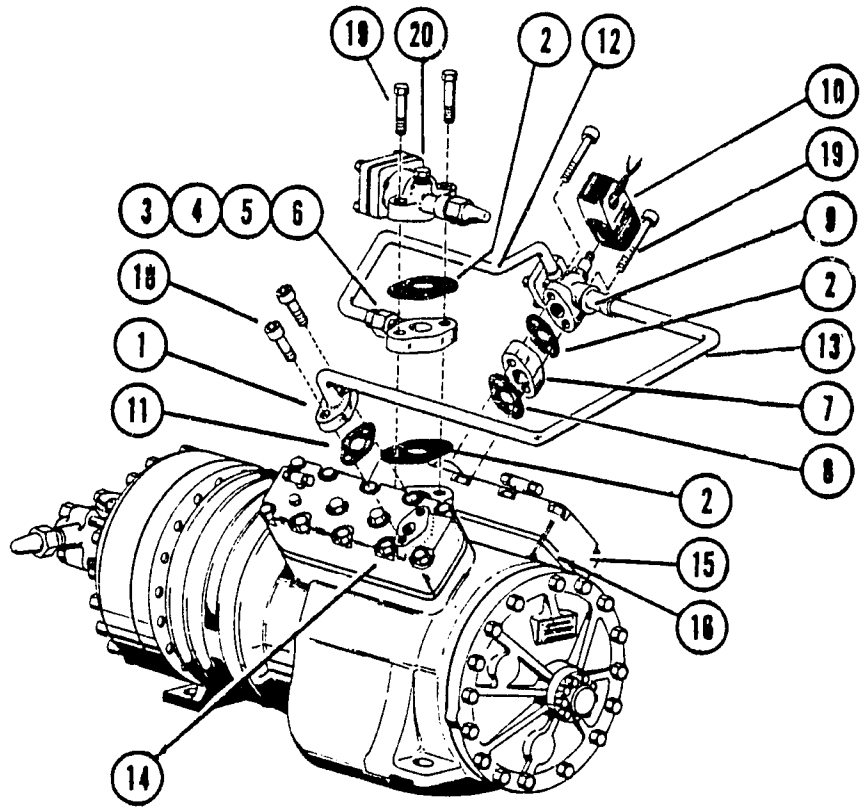

NOTE: RIGHT HAND (RH) AND LEFT HAND (LH) IS DESIGNATED BY VIEWING FROM MOTOR END OF COMPRESSOR.

QTY.		3 & 4 Cyl. with 1 1/2 In. Stroke		6 Cyl. with 1 1/2 In. Stroke		4 Cyl. with 2 3/16 In. Stroke		6 Cyl with 1 49/64 In. Stroke or 2 3/16 In. Stroke	
		KIT 167		KIT 168		KIT 394		KIT 374	
REF. NO.	PART DESCRIPTION	PART NO.	QTY.	PART NO.	QTY.	PART NO.	QTY.	PART NO.	QTY.
1	Flange	FLG8	1	FLG8	1	FLG8	1	FLG8	1
2	Gasket	GKT340	3	GKT340	3	GKT340	3	GKT340	3
3	Adapter Block	ADP65	1	ADP64	1	ADP64	1	ADP64	1
4	Adapter Fitting	ADP71	1	ADP71	1	ADP71	1	ADP71	1
5	Gasket	GA430	1	GA430	1	GA430	1	GA430	1
6	Adapter Fitting	ADP77	1	ADP77	1	ADP77	1	ADP77	1
7	Adapter Fitting	ADP66	1	ADP66	1	ADP66	1	ADP66	1
8	Gasket	GKT159	1	GKT159	1	GKT159	1	GKT159	1
9	Valve	VAL357	1	VAL357	1	VAL357	1	VAL357	1
10	Coil (24V)	COL117T1	*	COL117T1	*	COL117T1	*	COL117T1	*
	Coil (115V)	COL117T2	*	COL117T2	*	COL117T2	*	COL117T2	*
	Coil (208/230V)	COL117T4	*	COL117T4	*	COL117T4	*	COL117T4	*
11	Gasket	GKT398	1	GKT398	1	GKT398	1	GKT398	1
12	Tubing	TUB2057T1	1	TUB2059	1	TUB2057T2	1	TUB2061	1
13	Tubing	TUB2058T1	1	TUB2060	1	TUB2058T2	1	TUB2062	1
14	Cyl. Head RH	HD94	1	HD98	1	HD94	1	HD98	1
15	Cyl. Head LH	HD93	1	HD97	1	HD93	1	HD97	1
16	Valve Plt. Assy.	PLT317A	1	PLT2002A	1	PLT317A	1	PLT2002A	1
17	Screw - Valve	0346P19	2	0346P19	2	0346P19	2	0346P19	2
18	Screw -Flange	0341P13	2	0341P13	2	0341P13	2	0341P13	2
19	Bolt - Valve	011P29	2	014P29	2	014P29	2	014P29	2
20	Discharge Valve	—	**	—	**	—	**	—	**

*Specify (1) one only.
**Discharge Valves are NOT INCLUDED with Unloader Kits.

Kits valid for 60 Hz. and 50 Hz., direct drive, hermetic machines high temperature applications. Refer to parts listing on pages 9 thru 44 for stroke specifications (example: 204PHF non-unloading specifications identical to 204UPHF).

D/B METIC AND D-LINE COMPRESSOR PARTS KITS

TERMINAL STUD KITS FOR D/B METIC FRACTIONAL COMPRESSORS

MODEL	ELECTRICAL SERVICE	(QTY) TERMINAL POST	TERMINAL* PLATE ASSEMBLY	GASKET
5HCL	115/208/230/460-1-60	3	NB15	NA8
8HCL	115/208/230/460-3-60	3	NB15	
9HCL 10HCL 11HCL	115/208/230/460-1-60	3	GB283	GA369
	115/208/230/460-3-60	6	GB282	

* Includes Terminal Posts and Plate, Assembled.

TERMINAL STUD KITS FOR D/B METIC INTEGRAL COMPRESSORS

CYL.	HP RANGE	ELECTRICAL SERVICE	QTY. OF ACTIVE TERM. POSTS	KIT NO.*
2	1½ → 3	208/230-1-60	3	KIT 161
		575-3-60	3	KIT 162
		208/230/460-3-60	6	KIT 163
3, 4 6	3 → 5	208/230-1-60	3	KIT 164
	3 → 7½	575-3-60	3	KIT 165
		208/230/460-3-60	6	KIT 166†
		208/230/460-3-60	6 Active Plus 2 Inactive Motor Protector Terminals.	KIT 335
	10 → 20	208/230/460-3-60	6 Active Plus 2 Active Internal Thermostat Terminals.	KIT 334
		575-3-60	3 Active Plus 2 Active Internal Thermostat Terminals	KIT 336

* Includes All Nuts, Washers, Insulators, Terminals, Spacers, Plate, Dummy Terminals
† No Motor Protector Terminal Holes Drilled in Crankcase

GASKET KITS FOR D/B METIC AND D-LINE

COMPRESSOR	KIT NO.
2 Cylinder Fractional (5HCL, 8HCL, 9HCL, 10HCL, 11HCL)	GA111
2 Cylinder Integral	KIT 353
3 & 4 Cylinder Integral	KIT 354
6 Cylinder Integral	KIT 355

VALVE ASSEMBLY REBUILDING KITS* FOR NON-UNLOADING D/B METIC AND D-LINE

COMPRESSOR	KIT NO.†
2 Cylinder Fractional	††
2, 3, 4, 6 Cylinder Integral	KIT 373**

† Order Qty. Kits (1) For Each Cylinder.
†† Sold as Complete Valve Plate Assembly Only.
* See Page 45 For Illustration.
** See Page 45 For Unloading Valve Assemblies.

OIL SYSTEM KITS

COMPRESSOR	KIT DESCRIPTION	KIT NO.
3, 4 and 6 Cylinder	Converting Old Style of No Oil Pump To Latest Oil Pump For Machines With 1-3/8" Main Bearing I.D.	Kit 357
	Converting Old Style Or No Oil Pump To Latest Oil Pump For Machines With 1-1/2" Main Bearing I.D.	Kit 358
All	Oil Equalization (Multiple Compressor System)	Kit 333

HEATER KITS

NOMINAL CONTROL VOLTAGE	CRANKCASE HEATERS DESCRIPTION	PART #
120V †	100W Element, Single Phase with Flexible Conduit & Leads	GA1522
240V *		GA1521

†Optional
*Standard

D/B METIC AND D-LINE VALVE PLATE ASSEMBLIES 2, 3, 4 AND 6 CYLINDER MODELS

ADDENDUM NO. 1 TO 4032F
REPLACES PAGE 45

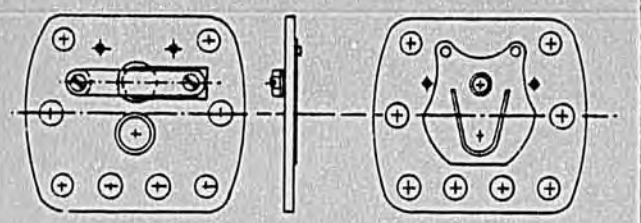

GB 160 - All 2 cylinder fractional compressors
Valve plate assembly 2 cylinder models.

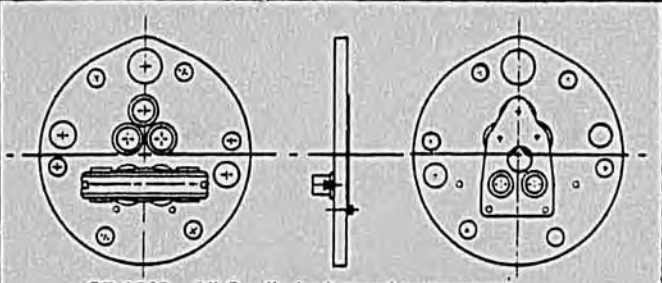

GB 1042 - All 2 cylinder integral compressors
Valve plate assembly 2 cylinder integral models.

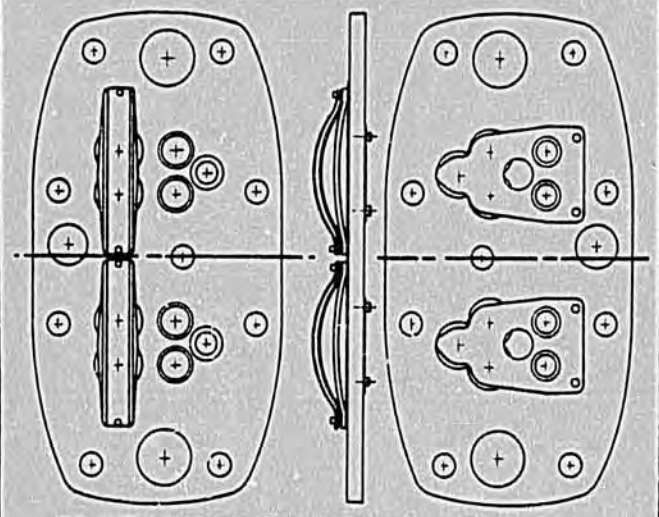

GC 1162 - Non-unloading compressor
Valve plate assembly for 3 and 4 cylinder models without unloading.

Unloading compressors
Valve plate is required as a right hand valve plate (facing motor) for all 3 and 4 cylinder models.

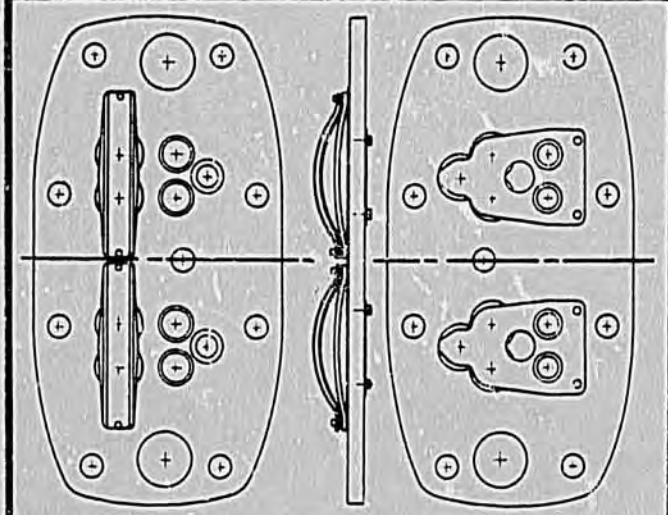

PLT 317A - Unloading plate
Valve plate assembly for all 3 and 4 cylinder models equipped with unloading. (1) per compressor on left hand side.

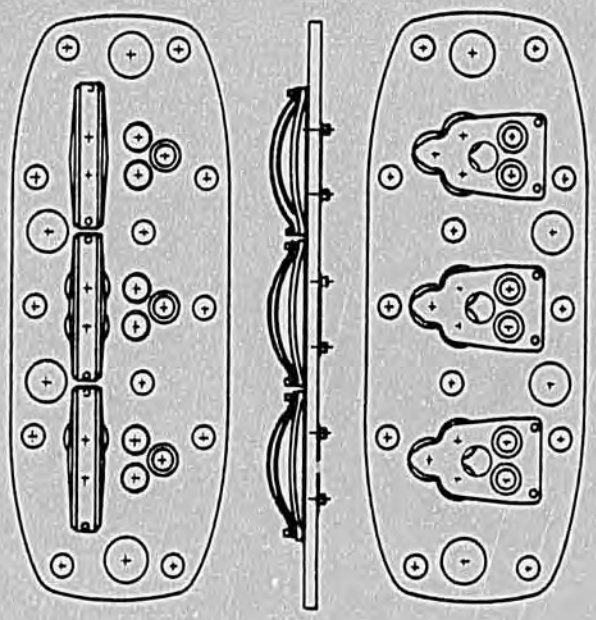

PLT 2001A - Non-unloading compressors
Valve plate required for all 6 cylinder compressors.

Unloading Compressors
Valve plate required as a right hand valve plate (facing motor) for all 6 cylinder models.

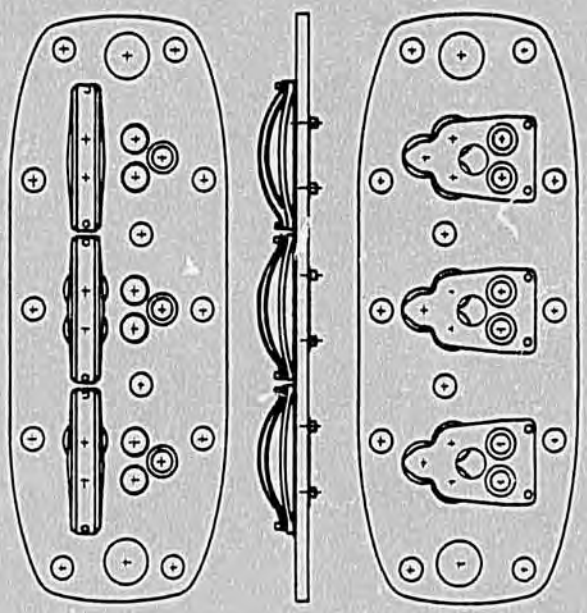

PLT2002A - Unloading plate
Valve plate assembly for all 6 cylinder models equipped with unloading (1) per compressor located on left hand side of the compressor.

Note: See page 48 for unloader kit information.

324

D/B METIC AND D-LINE MOUNT ASSEMBLIES

D/B METIC SPRING MOUNT ASSEMBLIES

CYL.	HP	60 HERTZ COMPRESSOR MODELS	60 HERTZ SPRING ASSEMBLY KIT NUMBER PUMP END	60 HERTZ SPRING ASSEMBLY KIT NUMBER MOTOR END	50 HERTZ COMPRESSOR MODELS	50 HERTZ SPRING ASSEMBLY KIT NUMBER PUMP END	50 HERTZ SPRING ASSEMBLY KIT NUMBER MOTOR END
2	½	5HCL	G894	G8119			
	¾	8HCL					
		9HCL					
	1	10HCL					
		11HCL					
	1½	15H/CF/LF	KIT393T3	KIT393T4	15HF5	KIT393T3	KIT393T4
		15C/ELF			15H5/CF5/LF5		
		15L			15C5/ELF5		
		-			15L5		
	2	20HF	KIT393T3	KIT393T4	20HF5	KIT393T3	KIT393T5
		20H/CF/LF			20H5/CF5/LF5		
		20C/ELF			20C5/ELF5		
		20L			22L5		
	3	30HF	KIT393T5	KIT393T5	30CF5	KIT393T5	KIT303T5
		30CF			30HF5		
		30H/LF			32H5/LF5		
		32C/ELF			-		
3	5	52HF	KIT393T6	KIT393T7	52HF5	KIT393T6	KIT393T7
4	3	30C/ELF	KIT393T6	KIT393T7	30C5/ELF5	KIT393T6	KIT393T7
		30L			30L5		
		-			41PL		
	5	50CF	KIT393T6	KIT393T7	50CF5	KIT393T6	KIT393T7
		50H/LF			50H5/LF5		
		50C/ELF			51PH5/C5/LF5		
		51PL			62PC5/ELF5		
	7½	75HF	KIT393T6	KIT393T7	75HF5	KIT393T6	KIT393T7
		75CF			-		
		76PH/C/LF			-		
		77PC/ELF			-		
	10	100PHF	KIT393T6	KIT393T7	101PHF5/CF5	KIT393T6	KIT393T6
		111PHF/CF			111PHF5/CF5		
	15	151PHF/CF	KIT393T6	KIT393T9	-	-	-
6	5	-	-	-	61PL5	KIT393T7	KIT393T9
	7½	76PL	KIT396T7	KIT393T8	75PL5	KIT393T7	KIT393T9
		-	-	-	77PH5/C5/ELF5		
	10	101PH/C/ELF	KIT393T7	KIT393T9	101PH5/C5/ELF5	KIT393T7	KIT393T9
		104PL			-	-	-
	15	154PH/C/ELF	KIT393T7	KIT393T9	151PHF5/CF5	KIT393T7	KIT393T9
	17½	201PHF/CF			201PHF5/CF5		
	20	204PHF/CF			-	-	-

D/B METIC SPRING MOUNT ASSEMBLIES – OLD MODELS

CYL.	HP	60 HERTZ COMPRESSOR MODELS	60 HERTZ SPRING ASSEMBLY KIT NUMBER PUMP END	60 HERTZ SPRING ASSEMBLY KIT NUMBER MOTOR END	50 HERTZ COMPRESSOR MODELS	50 HERTZ SPRING ASSEMBLY KIT NUMBER PUMP END	50 HERTZ SPRING ASSEMBLY KIT NUMBER MOTOR END
3	2	-	-	-	20L5	KIT393T6	KIT393T7
		-	-	-	30H/LF5	KIT393T6	KIT393T7
4	3	30EL	KIT393T6	KIT393T7	-	-	-
6		-	-	-	30EL5	KIT393T7	KIT393T9
	5	50L	KIT393T7	KIT393T8	50 PL5	KIT393T7	KIT393T9
		50PEL			50PEL5		
		-	-	-	50C5/ELF5		
	7½	75PL	KIT393T7	KIT393T8	75PH5/LF5	KIT393T7	KIT393T9
		76PC/ELF			75PC5/ELF5		
		75H/LF			75CF5		
	10	100PHC/ELF	KIT393T7	KIT393T9	100PH/C/ELF5	KIT393T7	KIT393T9
		100PCF			100PCF5		
		-	-	-	100PHF5		
	15	150PHF	KIT393T7	KIT393T9	150PHF5	KIT393T7	KIT393T9
		150PCF			-	-	-
	17½	174PCF	KIT393T7	KIT393T9	200PHF5	KIT393T7	KIT393T9
		200PHF					

HERMETIC COMPRESSORS

Install as illustrated, place compressor on spring mounts and allow springs to deflect their maximum under the compressor weight. Run locknut down to flat washer, then back off 2 full turns.

Running the compressor with the locknut torqued down on the outer washer will destroy the effectiveness of the spring mount.

NOTE: DO NOT USE this type of mounting on D-Line Direct Drive Compressors.

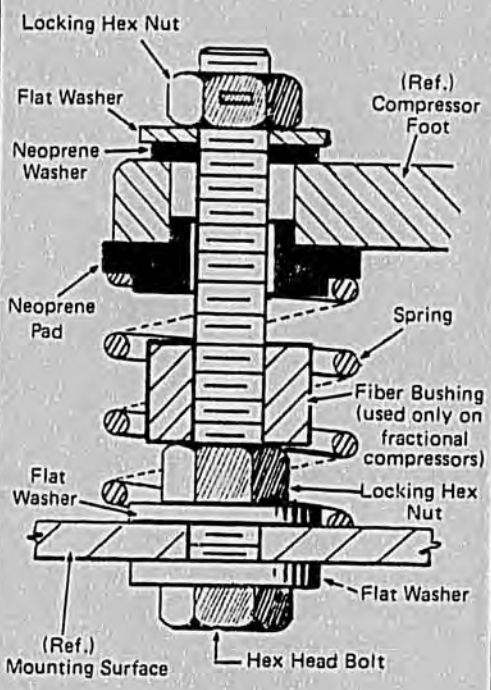

NOTE: One (1) spring mount assembly is required for each mounting foot, i.e. fractional compressors · 3 legs = 3 kits.

D-LINE SOLID MOUNT ASSEMBLIES

USEAGE MANDATORY ON DIRECT DRIVE COMPRESSORS, BUT MAY BE USED ON SEMI-HERMETIC COMPRESSORS.

KIT 160, 1 set per D-Line compressor. NOTE: This type of mount is used for all Direct Drive Compressors.

NOTE: Kit 160 has four (4) solid mount assemblies per kit.

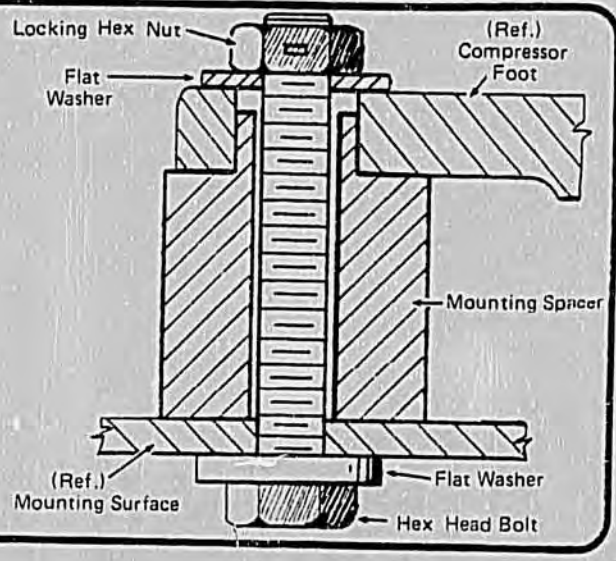

DUNHAM-BUSH

AIR CONDITIONING, REFRIGERATION, HEATING PRODUCTS AND ACCESSORIES

MAIN OFFICES

175 SOUTH STREET WEST HARTFORD, CONNECTICUT 06110

FACTORIES

WEST HARTFORD DIVISION
179 South Street
West Hartford, Connecticut
06110

HARRISONBURG DIVISION
101 Burgess Road
Harrisonburg, Virginia
22801

MARSHALLTOWN DIVISION
811 East Main Street
Marshalltown, Iowa
50158

RIVERSIDE DIVISION
1850 Massachusetts Ave.
Riverside, California
92507

SUBSIDIARIES

DUNHAM-BUSH of Canada Limited
140 Wendell Avenue
Weston, Ontario

DUNHAM-BUSH, LTD.
Fitzherbert Road, Farlington
Portsmouth, Hampshire, England

DUNHAM-BUSH INTERNATIONAL: 175 South Street, West Hartford, Connecticut 06110, U.S.A.
CABLE: DUNBUSH or TELEX: 994469

SALES OFFICES

ALABAMA
Birmingham
Mobile

ARIZONA
Phoenix

ARKANSAS
Little Rock

CALIFORNIA
Arcadia
Los Angeles
San Diego
San Francisco

COLORADO
Denver

CONNECTICUT
Hartford
New Haven

FLORIDA
Jacksonville
Miami
Orlando
Tampa

GEORGIA
Atlanta

HAWAII
Honolulu

ILLINOIS
Chicago
Peoria
Rockford

INDIANA
Indianapolis
Michigan City

IOWA
Des Moines

KANSAS
Lenexa

KENTUCKY
Louisville

LOUISIANA
New Orleans
Shreveport

MAINE
Lewiston

MARYLAND
Baltimore
Silver Spring

MASSACHUSETTS
Boston
Springfield

MICHIGAN
Detroit
Grand Rapids
Kalamazoo

MINNESOTA
Minneapolis

MISSISSIPPI
Jackson

MISSOURI
Kansas City
St. Louis

MONTANA
Billings
Great Falls

NEBRASKA
Omaha

NEW JERSEY
Little Falls
South Amboy
Union

NEW MEXICO
Albuquerque

NEW YORK
Albany
Buffalo
New York City
Rochester
Syracuse

NORTH CAROLINA
Charlotte
Greensboro

OHIO
Akron
Cincinnati
Cleveland
Columbus
Dayton
Delaware
Toledo

OKLAHOMA
Oklahoma City
Tulsa

OREGON
Portland

PENNSYLVANIA
Harrisburg
Philadelphia
Pittsburgh
Pittston

RHODE ISLAND
Providence

SOUTH CAROLINA
Columbia
Greenville

TENNESSEE
Chattanooga
Memphis
Knoxville
Nashville

TEXAS
Austin
Corpus Christie
Dallas
El Paso
Fort Worth
Houston
Lubbock
San Antonio

UTAH
Salt Lake City

VIRGINIA
Alexandria
Richmond

WASHINGTON
Seattle
Spokane

WEST VIRGINIA
Barboursville

WISCONSIN
Milwaukee

DUNHAM-BUSH, INC. • West Hartford, Connecticut 06110, U.S.A.
4032F-2M-980F-678E
one of The Signal Companies

Exhibit C-3

DUNHAM-BUSH

FORM NO. 5220
NEW
EFFECTIVE
JULY 1980
SUPERSEDES 5620M

UNIT COOLER PARTS SELECTION LIST

INSTRUCTIONS FOR ORDERING

Due to redesign changes on the unit cooler line, of which the model designation has not been changed, it is not possible to compile a parts listing of all part changes. Therefore, for that reason it is always necessary that serial numbers be furnished for correct parts selection.

This revised form has important footnotes. It is of the utmost importance when ordering to read all footnotes under the parts column of the part being selected.

WHEN ORDERING - SPECIFY COMPLETE PART NUMBER AND PART DESCRIPTION. This expedites your order, and assures the shipment of the correct part.

Specify on your order, method of shipment, i.e., parcel post, express, truck, etc. If not specified, shipment will be made best way as determined by our Shipping Department.

All 50 Hertz valves, controls, etc. have been removed from the price list. However, they can still be ordered thru the factory, but only on a quotation basis. This quotation can be obtained simply by furnishing the factory with a description, model number and voltage of the item to be ordered. These parts shall be subject to the same terms applicable to other replacement parts.

All shipments are F.O.B. Harrisonburg, Va., collect. Prepaid and add charges should be specified on your order. Clearly indicate on order, complete shipping information.

TERMS of shipment will be governed by Credit Department of Dunham-Bush, Inc. When sight draft shipment is involved, specify bank against which draft is to be drawn, and sent.

Specify correct parts required. We are not responsible for errors in ordering. Parts ordered in error must have our approval before returning. Any parts so returned are returned at customer's expense.

CLAIMS for in-transit damage are not the responsibility of Dunham-Bush. Such claims are to be sole responsibility of the consignee and should be filed against the carrier by consignee.

1. **Send all orders to:** **Dunham-Bush, Inc., Parts Department Harrisonburg, Virginia**
   Unless Otherwise Designated
2. **We reserve the right to ship substitute parts or alternate parts when interchangeable with the part ordered. The invoice will cover the price of the actual part shipped.**
3. **All orders requiring SPECIAL HANDLING for delivery to either the local bus station or the airport, will have a $25 additional charge invoiced or actual cost whichever is higher.**
4. **Refer to latest revision of Form 1278 for terms of sale.**
5. **Refer to latest revision of Form 6690 for pricing.**

IMPORTANT! INCLUDE ORIGINAL UNIT SERIAL NUMBER WITH ORDER.

DEFROST ELEMENTS
(COIL)

230V ECE SERIES 'C' 230V

PART NUMBER	MODEL 45	65	85	120	180	240	360	480	720
E210411	2								
E210412		2							
E210413			2						
E210414				2					
E210415					2				
E210416						3			
E210614							3		
E210478								6	
E210480									6

ECLS SERIES 'A' (Prior to S/N 72091001)

PART NUMBER	MODEL 45	85	130	170	210	270
E210648	2					
E210649		2				
E210650			2			
E210651				2		
E210652					2	
E210669						2

230V ECLS SERIES 'B-C-D' (After S/N 72091002) 230V

PART NUMBER	MODEL 45	65	85	130	170	210	270
B413004001	2						
B413004002		2					
B413004003			2				
B413004004				2			
B413004005					2		
B413004006						2	
B413004007							2

460V ECLS SERIES 'B-C-D' (After S/N 720091002) 460V

PART NUMBER	MODEL 45	65	85	130	170	210	270
B413005001	2						
B413005002		2					
B413005003			2				
B413005004				2			
B413005005					2		
B413005006						2	
B413005007							2

230V NDE SERIES 'D' 230V

PART NUMBER	MODEL 45	65	85	105	120	150	180	280
B413007001	2							
B413007002		2						
B413007003			2					
B413007004				2				
B4130C7005					2			
B413007006						2		
B413008001*							4	
B413008002*								4

*These are 120V Heaters. Two are required in series for 230V

460V ECE SERIES 'C' 460V

PART NUMBER	MODEL 45	65	85	120	180	240	360
E210520	2						
E210521		2					
E210522			2				
E210523				2			
E210524					2		
E210525						3	
E210526							3

EDA SERIES 'B-C' (STEEL)

PART NUMBER	MODEL 65	85	120	180	240	360
E210139	6					
E210148		6				
E210030			12			
E210034				16		
E210142					18	
E210053						22

EDE SERIES 'B-C' (COPPER)

PART NUMBER	MODEL 45	65	85	120	180	240	360
E210055	6						
E210058		6					
E210059			6				
E210054				12			
E210055					16		
E210056						18	
E210049							22

230V NDE SERIES 'B-C' 230V

PART NUMBER	MODEL 45	65	85	105	120	180	280
E210595	2						
E210596		2					
E210597			2				
E210598				2			
E210599					2		
E210600						6	
E210601							6

If replacement of Defrost Termination Thermostat is required, specify thermostat #210716. This thermostat has a 30°F "Fan-On" setting to restart fans after completion of defrost.

WJE SERIES 'A-B-C

PART NUMBER	MODEL 35 & 45	65	85 & 105	120	180	240	LENGTH (INCHES)
E210374	1						49½
E210375	1						55½
E210376	1						60 1/8
E210377		1					66 1/8
E210378		1					72 1/8
E210379		1					76¾
E210380			1				82 1/8
E210381			1				88 1/8
E210382			1				92¾
E210383				1			85¼
E210384				1			91¼
E210385				1			95 7/8
E210386					1	2	123¼
E210388					1	2	134 3/8

230V ECE SERIES 'A THRU D' 230V

PART NUMBER	MODEL								
	45	65	85	120	180	240	360	480	720
E210418	1								
E210419		1							
E210420			1						
E210421				1					
E210422					1				
E210423						1			
E210424							1		
E210479								2	
E210481									2

460V ECE SERIES 'A THRU D' 230V

PART NUMBER	MODEL								
	45	65	85	120	180	240	360	480	720
E210527	1								
E210528		1							
E210529			1						
E210530				1					
E210531					1				
E210532						1			
E210533							1		
E210534								2	
E210535									2

115V EDE SERIES 'A-B-C' * 115V

PART NUMBER	MODEL						
	45	65	85	120	180	240	360
E210341	4						
E210342		4					
E210343			4				
E210344				4			
E210345					4		
E210346						4	
E210347							4

*Elements shipped in straight lengths for field bending.

NOTE: Drain pan replacement heater elements are applicable for units with Serial No. MCA-31701 and later.

230V ECLS SERIES 'A' PRIOR TO S/N 72091001

PART NUMBER	MODEL					
	45	85	130	170	210	250
E210654	1					
E210655		1				
E210656			1			
E210657				1		
E210658					1	
E210679(128")						1
E210680(132")						1

230V ECLS SERIES 'B-C-D' AFTER S/N 72091002

PART NUMBER	MODEL						
	45	65	85	130	170	210	270
B413004008	1						
B413004009		1					
B413004010			1				
B413004011				1			
B413004012					1		
B413004013						1	
B413004014							1

460V ECLS SERIES 'B-C-D' AFTER S/N72091002

PART NUMBER	MODEL						
	45	65	85	130	170	210	270
B413005008	1						
B413005009		1					
B413005010			1				
B413005011				1			
B413005012					1		
B413005013						1	
B413005014							1

DRAIN PANS
(LESS HEATERS)

CJ SERIES 'A'

PART NUMBER	MODEL			
	45	65	85	105
L86816	1	1	1	1

ECA AND ECE SERIES 'A-B-C'

PART NUMBER	MODEL								
	45	65	85	120	180	240	360	480	720
B110747GO1	1								
B110747GO2		1							
B110747GO3			1						
B110747GO4				1					
B110747GO5					1				
B110747GO6						1			
B110747GO7							1		
B111127GO1								1	
B111116GO2									1

ECE SERIES 'D'

PART NUMBER	MODEL					
	120	180	240	360	480	720
B110747GO4	1					
B110747GO5		1				
B110747GO6			1			
B110747GO7				1		
B111116GO1					1	
B111116GO2						1

EDA AND EDE SERIES 'C' *

PART NUMBER	MODEL						
	45	65	85	120	180	240	360
C15066	1						
C15067		1					
C15063			1				
C15068				1			
C15069					1		
C15064						1	
C15070							1

*Contact Parts Dept. when updating old style units with pads.

ECLS SERIES 'A' (PRIOR TO S/N 72091001)

PART NUMBER	MODEL			
	45	85	130	170
B113017GO1	1			
B113017GO2		1		
B113017GO3			1	
B13017GO4				1

ECLS SERIES 'B-C' (AFTER S/N 72091002) *

PART NUMBER	MODEL						
	45	65	85	130	170	210	270
B116957GO1	1						
B116957GO2		1					
B116957GO3			1				
B116957GO4				1			
B116957GO5					1		
B116957GO6						1	
B116957GO7							1

*Can also use Replacement Drain Pan Kit listed at end of this section.

ECLS SERIES 'D'

PART NUMBER	MODEL						
	45	65	85	130	170	210	270
000524A1	1						
000524A2		1					
000524A3			1				
000524A4				1			
000524A5					1		
000524A6						1	
000524A7							1

HCE SERIES 'D'

PART NUMBER	MODEL					
	120	180	240	360	480	720
B110960GO1	1					
B110871GO1		1				
B110961GO1			1			
B110963GO1				1		
B111116GO3					1	
B111116GO4						1

ND AND NDE SERIES 'B-C'

PART NUMBER	MODEL						
	45	65	85	105	120	180	280
B115031GO1	1						
B115031GO2		1					
B115031GO3			1				
B115031GO4				1			
B115031GO5					1		
B115031GO6						1	
B115031GO7							1

ND, NDE AND NDH SERIES 'D'

PART NUMBER	MODEL								
	35	45	65	85	105	120	150	180	280
C111449GO1	1	1	1	1	1	1	1	1	1

UC AND UCA SERIES 'D'

PART NUMBER	MODEL					
	120	180	240	360	480	720
B110747G11	1					
B110747G12		1				
B110747G13			1			
B110747G14				1		
B111116GO3					1	
B111116GO4						1

UCH SERIES 'D'

PART NUMBER	MODEL					
	120	180	240	360	480	720
B110960GO1	1					
B110871GO1		1				
B110961GO1			1			
B110963GO1				1		
B111122GO1					1	
B111123GO1						1

DRAIN PANS
(LESS HEATERS)
(Cont'd)

UCLS SERIES 'A'

PART NUMBER	MODEL					
	52	104	156	208	260	312
B112578GO1	1					
B112578GO2		1				
B112578GO3			1			
B112578GO4				1		
B112578GO5					1	
B112578GO6						1

WJ AND WJE OLD STYLE-PRIOR 1958

PART NUMBER	MODEL				
	35	45	65	85	105
C40298	1				
C41088		1			
C40275			1		
C43973				1	1

Must supply Serial Number when ordering.

UCLS SERIES 'B-C' *

PART NUMBER	MODEL						
	52	78	104	156	208	260	312
B116957GO1	1						
B116957GO2		1					
B116957GO3			1				
B116957GO4				1			
B116957GO5					1		
B116957GO6						1	
B116957GO7							1

*Can also use Replacement Drain Pan Kit listed at end of this section.

WJ AND WJE SERIES 'A-B-C' AFTER 1958

PART NUMBER	MODEL							
	35	45	65	85	105	120	180	240
D104645001	1	1						
D104645002			1					
D104645003				1	1			
B18063001						1		
B18272001							1	1

UCLS SERIES 'D'

PART NUMBER	MODEL						
	52	78	104	156	208	260	312
000524A1	1						
000524A2		1					
000524A3			1				
000524A4				1			
000524A5					1		
000524A6						1	
000524A7							1

WJ SERIES 'D'

PART NUMBER	MODEL								
	35	45	65	85	105	120	150	180	240
C111227001	1	1	1	1	1	1	1	1	1

ECLS, UCLS REPLACEMENT DRAIN PAN KIT SERIES 'B-C'

PART NUMBER	MODEL													
	45	65	85	130	170	210	270	52	78	104	156	208	260	312
001182A1	1							1						
001182A2		1							1					
001182A3			1							1				
001182A4				1							1			
001182A5					1							1		
001182A6						1							1	
001182A7							1							1

FANS

CJ SERIES 'A'

PART NUMBER	FAN SIZE	45 45	65 65	85 85	105 105
E210328	N1427-3½	1			
E201311	N1627-3½		1		
E210333	N1820-4½			1	2

CU SERIES 'A'

PART NUMBER	10	13	17	23	30
See Motor-Fan is sold only with motor					

EDA AND EDE SERIES 'A'

PART NUMBER	FAN SIZE	45	65	85	120	180	240	360
E210328	N1429-3½B	1	1					
E210311	N1627-3½B			1				
E210329	N1622-3½B				2			
-	-					NA	NA	NA

ECE SERIES 'A-D'

PART NUMBER	FAN SIZE	45	65	85	120	180	240	360	480	720
E210425	N1228-4½	1								
E210426	N-1234-4½		1							
E210427	N1224-5 5/16			2						
E210428	N-1422-4½				2					
E210556	N1632-3½					2				
E210557	N1832-3½						2			
E210558	N2220-4 5/8							2		
E210559	N2416-4 5/8								3	4

ECU SERIES 'A'

PART NUMBER	10	15	19	28	35
See Motor – Fan is sold only with motor					

ECLS SERIES 'A' (PRIOR TO S/N 72091001)

PART NUMBER	FAN SIZE	45	85	130	170	210	250
DEV1816	1040-6	1	2	3	4	5	6

ECLS SERIES 'B-C-D" (AFTER S/N 72091002)

PART NUMBER	FAN SIZE	45	65	85	130	170	210	270
00565A1	1040-5	1	2	2	3	4	5	6

NOTE: This fan **CANNOT** be used with motors MM2847 (FASCO#7163-2692) and MM2848 (FASCO #7163-2737). Use DEV1816 fan on these two motors.

GCLS SERIES 'A'

PART NUMBER	FAN SIZE	45	85	130	170	210	250
DEV1816	1040-6	1	2	3	4	5	6

HCE SERIES 'D' S/N A50815-UP

PART NUMBER	FAN SIZE	45	65	85	120	180	240	360	480	720
E210328	N1429-3½	1								
E210425	N1228-4½	1								
E210426	N1234-4½		1							
E210311	N1627-3½			2						
E210427	N1224-4 5/16			2						
E210329	N1622-3½				2					
E210428	N1422-4½				2					
E210556	N1632-3½					2				
E210557	N1832-3½						2			
E210558	N2220-4 5/8							2		
E210559	N2416-4 5/8								3	4

NOTE: Check size of old fan with above listing before ordering.

HCLS SERIES 'D'

PART NUMBER	FAN SIZE	85	130	170	210	270
000565A1	1040-5	2	3	4	5	6

JF SERIES 'A'

PART NUMBER	FAN SIZE	19	12	18	25
E210077	OUH-813-5¼B	1	1		
-	-			NA	
E210080	01031-5 5/16B				1

LUC, LUCE ALL SERIES

PART NUMBER	FAN SIZE	1200	1500	1800	2200	3000
E211195	3028-4	1	1	1	1	
E211199	4238-4					1

ND AND NDE SERIES 'B-C' (S/N YF1E & UP)

PART NUMBER	FAN SIZE	45	65	85	105	120	180	280
E230336	N1024-4½	2						
E230337	N1034-4½		2					
-	N1040-4½			NA				
E230339	N1234-4½				2			
E230340	N1433-4½					2		
E230341	N1440-4½						2	2

NOTE: Fans for Series 'A' units are not longer available.

ND, NDE AND NDH SERIES 'D'

PART NUMBER	FAN SIZE	45	65	85	105	120	180	280
000565A1	1040-5	1	1	1	1	1	1	1

UC AND UCA SERIES 'B-C'

PART NUMBER	FAN SIZE	35	45	65	85	105	120	180	240	320	480	720
-	-	NA	NA			NA						
E210311	N1627-3½			1	1			2				
E210328	N1429-3½						2					
E210484	N1418-4½						2					
E210553	N1618-3½							2				
E210554	N1820-3½								2			
E210555	N2215-4½									2		
E210620	S24164½										3	4

NOTE: Check size of old fan with above listings before ordering.

UCH SERIES 'D'

PART NUMBER	FAN SIZE	120	180	240	360	480	720
E210464	N1418-4½	2					
E210556	N1632-3½		2				
E210557	N1832-3½			2			
E210558	N2220-4½				2		
E210559	N2416-4 5/8					2	3

FANS (Cont'd)

UCLS SERIES 'A' (PRIOR S/N 72091001)

PART NUMBER	FAN SIZE	52	104	156	208	260	312
DEV1816	1040-6	1	2	3	4	5	6

UCLS SERIES 'B-C-D' (AFTER S/N 72091002

PART NUMBER	FAN SIZE	52	78	104	156	208	260	312
000565A1	1040-5	1	2	2	3	4	5	6

NOTE: This fan **CANNOT** be used with motors MM2847 (FASCO#7163-2692) and MM2848 (FASCO #7163-2737. Use DEV1816 Fan on these two motors.

WJ & WJE SERIES 'A' S/N BEGINNING WITH UC-A-YF)

PART NUMBER	FAN SIZE	35	45	65	85	105	120	180	240
E210327	N1223-3½B	1	1						
E210320	N1429-3½			1					
E210328	N1427-3½			1					
E210311	N1627-3½				1				
E210329	N1622-3½					1			
E210333	N1820-4½						1		2
E210332	N1816-4½							2	

NOTE: Check size of old fan with above listings before ordering.

WJ SERIES 'B' (1973 - PRESENT) PART

PART NUMBER	FAN SIZE	35	45	65	85	105	120	150	180	240
E230095	1038-5½B	1	1							
A455026001	1236-4½B			1	1					
A455027001	1436-4½B					1	1			
E230296	6122-4½B							1	2	
A455028001	1640-4½B									2

FAN GUARDS

EC SERIES 'A' THRU D'

PART NUMBER	MODEL								
	45	65	85	120	180	240	360	480	720
E210442	1	1	2						
E210100				2					
E210101					2				
E210102						2			
E210103							2		
E210104								3	4

ED & HG SERIES 'B-C'

PART NUMBER	MODEL						
	45	65	85	120	180	240	360
E210100	1	1					
E210101			1	2			
E210102					2		
E210103						2	
E210104							2

ND, NDE & NDH SERIES 'D' (1973 TO PRESENT)

PART NUMBER	ALL SERIES
000707A1	As Required

ECLS, UCLS SERIES 'B THRU D'

PART NUMBER	ALL SERIES
000939A1	As Required

UC & UCH SERIES 'D'

PART NUMBER	MODEL					
	120	180	240	360	470	720
E210100	2					
E210101		2				
E210102			2			
E210103				2		
E210104					3	4

HC SERIES 'D'

PART NUMBER	MODEL								
	45	65	85	120	180	240	360	480	720
E210442	1	1	2						
E210100				2					
E210101					2				
E210102						2			
E210103							2		
E210104								3	4

KIT PARTS

CONTACTORS

PART NUMBER	DESCRIPTION	EC KIT SERIES A	ED KIT SERIES B	ED KIT SERIES C	HC KIT SERIES B-C
CTRD3N1E	3P 30 amp 115V	1			1
CTRD3N2E	3P 30 amp 230V	1			1
CTRD4N1E	4P 40 amp 115V	1			1
CTRD4N2E	4P 40 amp 230V	1	1	1	1
E210326	CR 153C003-BMA-230V			1	
E210265	CR 153D003-AAA-230V		1	1	
E210496	CR 153D103-ABA-230V	1			

HEAT EXCHANG

PART NUMBER	DESCRIPTION	ALL HOT GAS SYSTEM
E210251	HCX 212	1
E210252	HCX 218	1
E210253	HCX 318	1
E210254	HCX330	1
E210255	HCX 418	1
E210256	HCX 430	1
E210257	HCX 524	1
E210258	HCX 536	1
E210514	HCX 636	1
E210515	HCX 736	1

HC UNIT LINE AND THROTTLING VALVE

PART NUMBER	SIZE	45	65	85	120	180	240	360
E210315	3/8"	1	1	1				
E210316	1/2"				1	1	1	1

RELAY

PART NUMBER	DESCRIPTION	ED KIT SERIES C	HC KIT SERIES D
A388058002	PR11AY-115V	1	1
RLY106	-230V	1	1

STRAINERS

PART NUMBER	DESCRIPTION	ALL HOT GAS SYSTEM
E210190	911 x 5/8	1
E210191	914 x 7/8	1
E210192	922 x 1 1/8	1
E210193	922 x 1 3/8	1

THERMOSTATS

PART NUMBER	DESCRIPTION	EC KIT SERIES A	ECLS KIT SERIES A	ECLS, UCLS SERIES B-C-D HCLX	ED KIT SERIES B	HC KIT SERIES A	HC KIT SERIES D	LUCE ALL SERIES	NDH-UCH ALL SERIES
E210031	Penn 29OT-115V				1		1		
E210716	Ranco F25-115	1	1			1		1	1
A414009001	Ranco F25-115			1					

TIMERS

TIMERS PART NUMBER	DESCRIPTION	EC KIT SERIES A	ED KIT SERIES A	ED KIT SERIES B	ED KIT SERIES C	GCLS	HG KIT SERIES A	HC KIT SERIES B	HC KIT SERIES D	LUCE ALL SERIES
E210233	AUX-230V			1					1	
A410055002	A119-0-115V				1					
TMR38T1	A119-0-230V				1				1	
E210686	B633-0-115V					1				
E210689	B633-0-230V					1				
E210157	TD1254-0-115V		1				1			
E210158	TD1254-0-230V		1				1			
E210447	3990-0-230V	1							1	1
E210230	8102-115V			1				1	1	
E210232	8102-230V			1				1	1	
E210446	8145-0-115V								1	1

MOTORS

115/1/60 CJ SERIES 'A' 115/1/60

PART NUMBER	MODEL			
	45	65	85	105
E310025	1	1	1	1

115/1/60 CU SERIES 'A' 115/1/60

PART NUMBER	MODEL				
	10	13	17	23	30
E330131	1	1	2	2	3

230/1/60 CU SERIES 'A' 230/1/60

PART NUMBER	MODEL				
	10	13	17	23	30
E330132	1	1	2	3	3

115/1/60 ECLS SERIES 'A' 115/1/60
PRIOR TO S/N72091001

PART NUMBER	MODEL					
	45	85	130	170	210	250
E310185	1	2	3	4	5	6

230/1/60 ECLS SERIES 'A' 230/1/60
(PRIOR TO S/N 82091001

PART NUMBER	MODEL					
	45	85	130	170	210	250
E310186	1	2	3	4	5	6

115/1/60 ECLS & HCLS SERIES 'B THRU D' 115/1/60
(AFTER S/N 72091002)

PART NUMBER	MODEL						
	45	65	85	130	170	210	270
000514A1	1	2	2	3	4	5	6

NOTE: This motor replaces MM2847 (FASCO #7163-2692).
Must also replace fan with 000565A1.

208/230/1/60 ECLS & HCLS SERIES 'B THRU D' 208/230/1/60
(AFTER S/N 72091002)

PART NUMBER	MODEL						
	45	65	85	130	170	210	270
00051481	1	2	2	3	4	5	6

NOTE: This motor replaces MM2848 (FASCO#7163-2737).
Must also replace Fan with 000565A1.

208/230/1/60 EC & ECE SERIES 'A THRU D' 208/230/1/60

PART NUMBER	MODEL								
	45	65	85	120	180	240	360	480	720
E310096	1								
E310094		1		2					
E310095			2						
E310034					2				
MM2895001*						2	2	3	4

*NOTE: 001001 Spacer Kit is required when installing motor.

208/230/1/60 EDE & EDA SERIES 'A THRU D' 208/230/1/60

PART NUMBER	MODEL						
	45	65	85	120	180	240	360
E310019	1	1	1	2			
E310034					2	2	
MM895001*							2

*NOTE: 001001 Spacer Kit is required when installing motor.

115/1/60 ECU SERIES 'A' 115/1/60

PART NUMBER	MODEL				
	10	15	19	28	35
E330131	1	2	2	3	4

230/1/60 ECU SERIES 'A' 230/1/60

PART NUMBER	MODEL				
	10	15	19	28	35
E330132	1	2	2	3	4

115/1/60 GCLS SERIES 'A' 115/1/60

PART NUMBER	MODEL					
	45	85	130	170	210	250
E310185	1	2	3	4	5	6

230/1/60 GCLS SERIES 'A' 230/1/60

PART NUMBER	MODEL					
	45	85	130	170	210	250
E310186	1	2	3	4	5	6

115/1/60 HCE SERIES 'C' 115/1/60
(PRIOR TO S/N A50845)

PART NUMBER	MODEL						
	45	65	85	120	180	240	360
E310174	1	1	1				
E310030				2	2	2	
MM2894001*							2

*NOTE: 001001 Spacer Kit is required when installing motor.

230/1/60 HCE SERIES 'C' 230/1/60
(PRIOR TO S/N A50845)

PART NUMBER	MODEL						
	45	65	85	120	179	249	360
E310175	1	1	1				
-				NA			
MM2895001*					2	2	2

*NOTE: 001001 Spacer Kit is required when installing motor.

115/1/60 HCE SERIES 'D' 115/1/60
(S/N A50845-UP)

PART NUMBER	MODEL								
	45	65	85	120	180	240	360	480	720
E310080	1								
-		NA		NA					
E310079			2						
E310030					2				
MM289400*						2			
E310082							2	3	4

*NOTE: 001001 Spacer Kit is required when installing motor.

230/1/60 HCE SERIES 'D' 230/1/60
(S/N A50845-UP)

PART NUMBER	MODEL								
	45	65	85	120	180	240	360	480	720
E310096	1								
E310094		1		2					
E310095			2		2				
E310034						2			
MM2895001*							2	3	4

*NOTE: Supply 001001 Spacer Kit

MOTORS
(Cont.'d)

MISC. HCE MOTORS SERIES 'D'

PART NUMBER	VOLT VOLT	MODEL 45	65	85	120	180	240	360	480	720
E310184*	115	1	1	1	2					
E310183*	230	1	1	1	2					
E310181*	115					2				
E310109	208/230/3/60					2				
E310111	208/230/3/60						2	2	3	4

*NOTE: These motors are explosion proof.

115/1/60 JF SERIES 'A' 115/1/60

PART NUMBER	MODEL 9	12	16	25
-	NA	NA		
E310003			1	
E310005				1

230/1/60 JF SERIES 'A' 230/1/60

PART NUMBER	MODEL 9	12	16	25
E310002	1	1		
E310004			1	
E310006				1

230/460/3/60 LUC, LUCE ALL SERIES 230/460/3/60

PART NUMBER	MODEL 1200	1500	1800	2200	3000	HP
E313166	1	1	1	1		1
MM2014301					1	5

115/1/60 ND & NDE SERIES 'A' 115/1/60 (PRIOR 1964)

PART NUMBER	MODEL 45	65	85	180
E310071	2	2	2	
-				NA

115/1/60 ND & NDE SERIES 'B-C' 115/1/60 (S/N YF1E-UP)

PART NUMBER	MODEL 45	65	85	105	120	180	280
E310112	2	2	2	2	2		
E310174						2	
E310173							2

230/1/60 ND & NDE SERIES 'B-C' 230/1/60 (S/N YF1E-UP)

PART NUMBER	MODEL 45	65	85	105	120	180	280
E310113	2	2	2	2	2		
E310175						2	
E310176							2

115/1/60 ND, NDE & NDH SERIES D 115/1/60 (PRESENT)

PART NUMBER	MODEL 45	65	85	105	120	180	280
000514A1	1	1	1	1	1	1	1

230/1/60 ND, NDE & NDH SERIES 'D' 230/1/60 (PRESENT)

PART NUMBER	MODEL 45	65	85	105	120	180	280
000514B1	1	1	1	1	1	1	1

MOTORS
(Cont'd)

115/1/60 UC & UCA SERIES 'D' 115/1/60
(S/N YF12D-UP)

PART NUMBER	MODEL										
	35	45	65	85	105	120	180	240	360	480	720
-	NA										
E310080		1				2					
E310030				1			2	2			
-			NA		NA						
MM2894001*									2	3	4

*NOTE: 001001 Spacer Kit is required when installing motors.

230/1/60 UC & UCA SERIES 'D' 230/1/60
(S/N YF12D-UP)

PART NUMBER	MODEL										
	35	45	65	85	105	120	180	240	360	480	720
-	NA										
E310096		1				1					
E310034				1			2	2			
-			NA		NA						
MM2895001*									2	3	4

*NOTE: 001001 Spacer Kit is required when installing motors.

115/1/60 UC & UCH SERIES 'D' 115/1/60

PART NUMBER	MODEL					
	120	180	240	360	380	720
001982A1	2					
MM2894001		2	2	2	2	2

230/1/60 UC & UCH SERIES 'D' 230/1/60

PART NUMBER	MODEL					
	120	180	240	360	480	720
E310094	2					
MM2895001		2	2	2	2	3

115/1/60 UCLS SERIES 'A' 115/1/60
(PRIOR S/N 72091001)

PART NUMBER	MODEL					
	52	104	156	208	260	312
E310185	1	2	3	4	5	6

230/1/60 UCLS SERIES 'A' 230/1/60
(PRIOR S/N 72091001

PART NUMBER	MODEL					
	52	104	156	108	260	312
E310186	1	2	3	4	5	6

115/1/60 UCLS SERIES 'B-C-D' 115/1/60
(AFTER S/N 72091002)

PART NUMBER	MODEL						
	52	78	104	156	208	260	312
00514A1	1	2	2	3	4	5	6

NOTE: This motor replaces MM2847 (FASCO #7163-2693).
Must also replace fan with 000565A1.

230/1/60 UCLS SERIES 'B-C-D' 230/1/60
(AFTER S/N 72091002)

PART NUMBER	MODEL						
	52	78	104	156	208	260	312
00051481	1	2	2	3	4	5	6

NOTE: This motor replaces MM2848 (FASCO #7163-2737). Must also replace fan with 000565A1.

115/1/60 WJ AND WJE SERIES 'A' 115/1/60
(S/N BEGIN WITH UC AND A AND ENDING YF12D)

PART NUMBER	MODEL							
	35	45	65	85	105	120	180	240
-	NA	NA						
E310020			1	1				
E310031					1			
MM1136						1	2	2

230/1/60 WJ & WJE SERIES 'A' 230/1/60
(S/N BEGIN WITH UC AND A AND ENDING YF12D)

PART NUMBER	MODEL							
	35	45	65	85	105	120	180	240
E310046	1	1						
-			NA	NA	NA	NA	NA	NA

115/1/60 WJ SERIES 'A' & WJE SERIES 'B' 115/1/60
(STARTING WITH S/N YF12D)

PART NUMBER	MODEL							
	35	45	65	85	105	120	180	240
E310149	1	1						
-			NA	NA				
E310151					1			
MM1136						1	2	2

230/1/60 WJ SERIES A & WJE SERIES B 230/1/60
(STARTING WITH S/N YF12D)

PART NUMBER	MODEL							
	35	45	65	85	105	120	180	240
-	NA	NA						
E310154			1	1				
-					NA			
E310156						1	2	2

115/1/60 WJ SERIES B 115/1/60
(1973 -- PRESENT)

PART NUMBER	MODEL								
	35	45	65	85	105	120	150	180	240
0005140	1	1							
MM1008			1	1					
MM1136					1	1	1	2	
MM1469									2

Exhibit 3-4

DUNHAM-BUSH

RECIPROCATING COMPRESSOR CONSOLIDATED PARTS PRICE LIST

COMPRESSOR LINE	FOR SELECTION REFER TO: (LATEST REVISION)
D/B-Metic & D-Line	Form No. 4032
Big-4 Compressors (a) semi-hermetic (b) direct-drive	Form No. 4056 , 4056-1 4056-2
Belt-Drive Compressors	Form No. 4004
Multi-Drive Compressors (a) semi-hermetic (b) direct-drive	Form No. 4022

TERMS OF SHIPMENT: F.O.B. SHIPPING POINT.

ALL PRICES SUBJECT TO CHANGE WITHOUT NOTICE.

PARTS WILL BE INVOICED AT PRICES IN EFFECT AT THE TIME OF SHIPMENT.

ORDERING INSTRUCTIONS

1. Complete part number and its description is required when ordering.
2. When a part number is not known or shown in the parts catalog, complete model and serial number of the compressor on which the part is to be used should be given.
3. Send all orders to: Dunham-Bush, Inc. Service Parts Dept.
   179 South Street, West Hartford, Connecticut 06110
4. All prices are for one each part or kit as applicable.
5. Federal, state, local or other taxes are not included in the attached prices.
6. We reserve the right to ship substitute parts or alternate parts when interchangeable with the part ordered. The invoice will cover the price of the actual part shipped.
7. All orders requiring SPECIAL HANDLING, will have $50 net additional charge invoiced or actual cost whichever is higher. This includes delivery to the airport, bus station, etc.
8. Minimum billing is $25.00
9. Refer to latest revision of Form 1278 for terms of sale.

PART NUMBER	DESCRIPTION	LIST PRICE
*ASY136A	UNLOADER CONT ASSY	1,521.26
ADP15	ADAPTER	54.81
ADP64	ADAPTER BLOCK	50.46
ADP65	ADAPTER BLOCK	44.73
ADP66	ADAPT FITTING	17.62
ADP71	ADAPTER FITTING	17.07
ADP77	EQUAL VALVE ADAPT	13.97
ASY161A	ELEC CONT ASSY	443.20
ASY162A	CAP CONT ASSY	155.04
ASY230	SEE 050148A1	.00
ASY265A	THERMOSTAT	41.02
ASY268A	UNLOADER CONT ASSY	1,525.45
ASY859	OIL COOLER ASSY	105.36
ASY860	OIL COOLER ASSY	105.36
ASY862	PISTON ASSY PST51A	137.11
ASY864	PISTON ASSY PST38A	85.23
A650B16	GASKET 65016	5.34
BFRK1	115V CONTROL KIT	206.76
BFRK2	230V CONTROL KIT	207.92
BLK28	TERM SEP BLOCK	13.23
BRG123	BEARING	14.60
BRG31	BEARING OIL PUMP	99.69
BRG47	BEARING	73.01
BRG53	PUMP HSG BEARING	26.43
BRG54	CRNKCASE MAIN BEAR	18.76
BUS39	BUSHING	3.05
BUS78	BUSHING	1.75
BOX2261	TERM BOX W/COV	48.97
BOX2501	B/M BOX ASSY NO	174.52
BOX2502	B/M BOX ASSY NO	174.52
BOX2508	B/M BOX ASSY NO	154.62
BOX2509	B/M BOX ASSY NO	115.74
BOX2510	B/M BOX ASSY NO	55.12
BOX2511	B/M BOX ASSY NO	154.62
BOX2512	B/M BOX ASSY NO	145.45
BOX2513	B/M BOX ASSY NO	137.16
BOX2514	B/M BOX ASSY NO	276.69
BOX2515	B/M BOX ASSY NO	87.98
BOX2518	B/M BOX ASSY NO	172.67
BOX2519	B/M BOX ASSY NO	144.69
BOX2520	B/M BOX ASSY NO	69.54
BOX2521	B/M BOX ASSY NO	66.37
BOX2523	B/M BOX ASSY NO	176.28
BOX2524	B/M BOX ASSY NO	170.87
BOX2525	B/M BOX ASSY NO	192.40
BOX2526	B/M BOX ASSY NO	134.58
BOX2528	B/M BOX ASSY NO	162.03
BOX2529	B/M BOX ASSY NO	204.74
BOX2530	B/M BOX ASSY NO	145.45
BOX2531	B/M BOX ASSY NO	124.87
BOX2564	B/M BOX ASSY NO	280.48
BOX2565	B/M BOX ASSY NO	260.23
BOX2566	B/M BOX ASSY NO	174.48
BOX2567	B/M BOX ASSY NO	156.35
BOX2867	TERMINAL BOX	30.14
BOX2868	TERMINAL BOX	33.70
BOX2869	TERMINAL BOX	94.75
BOX2870	TERMINAL BOX	31.69
BOX2871	TERMINAL BOX	68.73
BOX2872	TERMINAL BOX	28.81
CBL4	COUNTER WEIGHT	25.52
CBL5	COUNTER BALANCE	32.85
CKS12	CRANKSHAFT	FACTORY
CKS13	CRANKSHAFT	FACTORY
CKS14	CRANKSHAFT	FACTORY
CKS15	CRANKSHAFT	FACTORY
CKS29	CRANKSHAFT	FACTORY
CKS30	CRANKSHAFT	FACTORY
CKS31	CRANKSHAFT	FACTORY
CKS32	CRANKSHAFT	FACTORY

PART NUMBER	DESCRIPTION	LIST PRICE
CKS33	CRANKSHAFT	FACTORY
CKS34	CRANKSHAFT	FACTORY
CKS35	CRANKSHAFT	FACTORY
CKS52	CRANKSHAFT	FACTORY
CKS53T1	CRANKSHAFT	FACTORY
CKS53T2	CRANKSHAFT	FACTORY
CKS56T1	CRANKSHAFT	FACTORY
CKS57	CRANKSHAFT	FACTORY
CNT104	UNL PRESS SWITCH	39.20
CNT106	CONTROL	165.39
CNT138T1	CNT-SEE BFRK1 115V	.00
CNT138T2	CNT-SEE BFRK2 230V	.00
CNT24	CONTROL	134.51
CPL102TA	COUPLING	658.29
CPL103TA	COUPLING	691.65
CPL129TA	COUPLING	594.93
CPL148T1	COUPLING	184.76
CPL34TA	COUPLING	973.88
CPL35TA	COUPLING	862.68
CPL36TA	COUPLING	1,036.68
CPL59TA	COUPLING	569.27
CPR18	CAPACITOR	30.28
CPR19	CAPACITOR	32.33
CPR20	CAPACITOR	29.07
CPR22	CAPACITOR	49.57
CPR23	CAPACITOR	77.58
COL117T1	COIL 24V	41.15
COL117T2	COIL 115V	41.15
COL117T3	COIL 208V	41.15
COL117T4	COIL 230V	39.17
COL118T1	USE COL141T1	.00
COL118T9	USE COL141T2	.00
COL141T1	COIL	33.16
COL141T2	COIL 230V	33.18
CON36	OIL COOLER CONNECTOR	12.54
COV10	HAND HOLE COVER	53.93
COV110	COVER	9.36
COV111	COVER	13.58
COV112	MOTOR END COVER	221.84
DFR1	FOAM DIFFUSER	53.37
DIS14	RETAIN DISC	6.11
ECC15	ECCENTRIC	234.73
FLG8	FLANGE	28.86
FLR16	SUCTION FILTER	8.58
FLR28	SUCTION FILTER	33.47
FLR29	FILTER	15.93
FLR31	SUCT FILTER	22.13
FLR32	SUCT FILTER	20.02
FLR34	FILTER	15.75
FLR35	FILTER	22.65
FLR38	FILTER	51.56
FLR39	FILTER	25.73
FLR40	FILTER	44.10
FUS4	FUSE 1 1/4 AMP	3.63
GA1000	CONN ROD	39.22
GA1006	SEAL	1.40
GA1010	SEE GKT379	.00
GA1011	GASKET	4.41
GA1013	PISTON WASH	.64
GA1014	PISTON RING	2.54
GA1017	OUTER THRUST WASH	2.07
GA1021	ROTOR COUNTERWEIGHT	24.07
GA1026	PISTON RING	2.07
GA1027	PISTON RING	2.07
GA1028	KEY SHAFT	1.51
GA1029	KEY SHAFT	.93
GA1030	KEY SHAFT	.80
GA1033	SEE GKT343	.00
GA1037	BEARING	20.67
GA1038	BEARING	6.53

*$100.00 NET EXCHANGE CREDIT ALLOWED UPON RETURN IF HOUSING IS SALVAGEABLE.

PART NUMBER	DESCRIPTION	LIST PRICE
GA1039	GASKET	.68
GA106	GASKET	9.35
GA109	STRAINER	4.89
GA111	GASKET KIT	9.53
GA112	O RING	2.63
GA1207	TERMINAL BLOCK	6.94
GA1209	COVER GASKET	6.44
GA1210	SEE GKT340	.00
GA1228	SIGHT GLASS	3.90
GA1233	SIGHT GLASS GASKET	.71
GA1235	USE KIT334	.00
GA1289	ROTOR COUNTERWEIGHT	22.90
GA1366	SEE GKT329	.00
GA1376	TERM STRIP	4.38
GA1378	BUSHING	.71
GA1380	WASHER	.71
GA1478	GASKET	3.63
GA1518	VORTEX ELIM	11.13
GA1521	C C HEATER-240V	59.08
GA1522	C C HEATER-120V	59.08
GA1550	BEARING	6.28
GA1554	BEARING	8.14
GA1581	OIL PRESSURE REL VAL	10.39
GA1612	TEE	4.93
GA1683	RING .010	2.55
GA1693	GASKET	2.55
GA1731	SEAL ASSY	70.81
GA1966	INN THRUST WASHER	11.45
GA1967	THRUST WASHER	25.19
GA1968	OUTER THRUST WASH	13.75
GA1969	INN THRUST WASHER	10.60
GA210	SIGHT GLASS	4.59
GA211	RETAINER	4.82
GA212	FRICTION RING	.93
GA213	SIGHT GLASS GASKET	.71
GA369	GASKET	1.40
GA422	SUCT SERV VALVE	34.79
GA423	SUCT SERV VALVE	39.20
GA424	SUCT SERV VALVE	106.23
GA429	KEY SHAFT	1.78
GA430	GASKET	1.40
GA431	TEFLON GASKET	1.92
GA461T1	VALVE ADAPTER	106.85
GA461T2	SUCT VALVE ADAP	122.96
GA461T3	ADAPTER	65.24
GA462	GASKET	2.59
GA463	GASKET	2.76
GA466	ADAPTER	77.80
GA467	GASKET	.71
GB1000	SLINGER	21.12
GB1001	PISTON & PIN ASSY	28.66
GB1002	PISTON & PIN ASSY	22.81
GB1003	PISTON & PIN ASSY	26.45
GB1018T1	KLIXON	12.01
GB1018T2	KLIXON	12.01
GB1018T3	KLIXON	14.60
GB1019T1	KLIXON	42.08
GB1019T2	KLIXON	36.47
GB1042	VALVE PLATE ASSY	54.10
GB1089	HEAD GASKET	2.59
GB1090	SEE GKT375	.00
GB1091	SIGHT GLASS RET	19.00
GB1117T1	KLIXON	45.20
GB1117T2	KLIXON	43.14
GB1126T2	KLIXON	54.95
GB1126T3	KLIXON	54.95
GB1126T4	KLIXON	54.95
GB1126T5	KLIXON	54.95
GB1126T6	KLIXON	54.95
GB1127T1	KLIXON	44.71

PART NUMBER	DESCRIPTION	LIST PRICE
GB1127T2	KLIXON	44.71
GB1127T3	KLIXON	44.71
GB1127T4	KLIXON	44.71
GB1127T5	KLIXON	48.92
GB1127T6	KLIXON	59.73
GB1127T7	KLIXON	54.95
GB1127T8	PROTECTOR	51.98
GB1127T9	KLIXON	54.95
GB1128T1	KLIXON	54.95
GB1128T2	KLIXON	65.61
GB1203	SEAL ASSY	73.68
GB126T1	RELAY	20.02
GB126T3	RELAY	26.61
GB126T4	START RELAY	22.74
GB126T5	START RELAY	39.64
GB1368	PISTON & PIN ASSY	78.10
GB1369	PISTON & PIN ASSY	96.67
GB1381	OIL STRAINER	33.10
GB1473T1	KLIXON	75.87
GB1473T2	KLIXON	75.87
GB1528	PISTON	33.18
GB158	GASKET	5.34
GB1[illegible]	VALVE PLATE ASY	42.19
GB171	VALVE PLATE ASY	43.32
GB191T1	RELAY	29.32
GB191T3	RELAY	40.84
GB277	COVER	5.43
GB280	CYLINDER HEAD	25.08
GB282	TERM PLATE	31.62
GB283	TERM PLATE	40.07
GB284	PISTON	63.53
GB285	TERM BOX	455.33
GB286	TERMINAL BOX	156.07
GB87	TERM ASSY	3.56
GB93	TERMINAL BLOCK	2.59
GC1000	CRANKSHAFT	403.44
GC1001	CRANKSHAFT	442.44
GC1003	HEAD RH	29.26
GC1007	HEAD LH	29.79
GC1150	HEAD GASKET	3.63
GC1151	SEE GKT377	.00
GC1156	CONN ROD	33.18
GC1162	VALVE PLATE ASSY	112.93
GC1163	SEE PLT2001A	.00
GC1344	GASKET	5.28
GC1347	GASKET	6.61
GC1348	ROD CONN	35.46
GC386	TERMINAL BOX	75.73
GD1001	BEARING HOUSING	125.58
GD1047T1	END COVER	137.67
GD1053	SEE BOX2870	.00
GD1084	SEE PLT960A	.00
GD1085	SEE PLT959A	.00
GD1086	SEE PLT963A	.00
GD1087	SEE PLT964A	.00
GD1117	CRANKSHAFT	597.31
GD1151	CRANK SHAFT	647.98
GD1189	HEAD RH	88.93
GD1190	HEAD LH	90.74
GD1191	HEAD RH	68.33
GD1192	HEAD LH	68.95
GD1194	HOUSING SEAL	266.91
GD1200	HOUSING SEAL	308.25
GD1218T1	END PLATE	243.42
GD1218T2	END COVER	254.14
GD1226	CONN ROD	86.16
GD1227	CRANKSHAFT	818.53
GKT100	GASKET	2.44
GKT105	CONDUIT COVER	4.93
GKT106	VALVE PLATE	1.40

PART NUMBER	DESCRIPTION	LIST PRICE
GKT113	OIL PUMP GASKET	5.26
GKT121	HOUSING GASKET	5.68
GKT122	TERM PLATE GASKET	3.48
GKT123	HEAD GASKET RH	6.16
GKT124	VALV PLATE GASKET	7.18
GKT125	HEAD GASKET LH	7.18
GKT127	SPACER PLATE GASKET	8.27
GKT157	SPACER PLATE GASKET	8.05
GKT158	VALVE PLATE GASKET	8.05
GKT159	GASKET	1.94
GKT215	UNL VAL GASKET	2.42
GKT23	GASKET	3.14
GKT24	GASKET	5.78
GKT28	GASKET	6.14
GKT30	GASKET	6.19
GKT301	VALV PLATE GASKET	6.19
GKT309	ADAPTER GASKET	8.13
GKT312	GASKET	1.75
GKT32	SEAL GASKET	1.61
GKT327	U V GKT KIT-KS30026	36.63
GKT328	USE KIT339 KS30031	.00
GKT340	VALV GASKET	1.75
GKT341	SEAL	1.40
GKT342	BOLT SEAL WASHER	.91
GKT343	HEAD GASKET	1.75
GKT370	VALVE PLATE GASKET	1.75
GKT371	VALVE PLATE GASKET	1.75
GKT372	VALVE PLATE GASKET	1.75
GKT373	VALVE GASKET	2.44
GKT374	VALVE GASKET	1.95
GKT375	VALVE GASKET	1.87
GKT376	VALVE PLATE GASKET	3.29
GKT377	VALVE PLATE GASKET	2.59
GKT398	VALVE GASKET	1.61
GKT50	HEAD	3.20
GKT51	HEAD	3.22
GKT52	HAND HOLE COVER	5.20
GKT53	HAND HOLE COVER	7.21
GKT54	HAND HOLE COVER	5.60
GKT55	CONDUIT COVER	9.75
GKT57	STRAINER COVER PLATE	8.89
GKT58	STRAINER COVER PLATE	2.53
GKT59	STRAINER COVER PLATE	4.82
GKT60	SUCTION LINE VALVE	1.61
GKT61	SUCTION LINE VALVE	3.38
GKT62	DISC LINE VALVE	1.61
GKT63	SUCTION LINE VALVE	3.46
GKT64	SUCTION LINE VALVE	3.46
GKT65	MOTOR COVER	7.47
GKT66	MOTOR COVER	16.37
GKT67	MOTOR COVER	19.97
GKT68	BEARING HOUSING	5.16
GKT69	BEARING HOUSING	5.80
GKT70	PUMP HOUSING	4.82
GKT71	PUMP HOUSING	4.82
GKT73	VALVE PLATE	1.44
GKT74	LINER TO CRANKCASE	2.42
GKT75	LINER TO CRANKCASE	2.63
GKT76	SEAL	6.89
GKT77	SEAL	2.98
GKT79	GASKET	8.40
GKT80	UNLOADER BODY	1.40
GKT81	GASKET	.93
GKT90	GASKET	1.44
GLS2	SIGHT GLASS	50.88
GLS3	OIL SIGHT GLASS	22.05
GLS4	SIGHT GLASS	27.73
GLS6	SIGHT GLASS	45.37
HD204	CYLINDER HEAD RH	358.49
HD205	CYLINDER HEAD LH	263.09

PART NUMBER	DESCRIPTION	LIST PRICE
HD206	CYLINDER HEAD RH	263.09
HD35	CYLINDER HEAD RH	183.26
HD36	CYLINDER HEAD LH	183.26
HD37	CYLINDER HEAD RH	183.26
HD38	HEAD	277.67
HD39	CYLINDER HEAD LH	222.78
HD40	CYLINDER HEAD LH	212.13
HD93	CYL HEAD R H	106.53
HD94	CYL HEAD L H	98.68
HD97	CYL HEAD RH	137.40
HD98	CYL HEAD L H	137.40
HSG12	SEAL HOUSING DIRECT	767.02
HSG13	SEAL HOUSING DIRECT	710.41
HSG31	SEAL HOUSING	580.99
HSG328	PUMP HSG W/BEARING	592.69
HSG6A	BEARING HOUSING W/B	546.39
HTR19	CRANKCASE HEATER 220	321.99
HTR59T1	CRANKCASE HEATER 230	59.12
HTR59T2	CRANKCASE HEATER 115	59.12
HTR60	CRANKCASE HEATER	69.68
HTR61	CRANKCASE HEATER	69.68
INN8	TERM INSULATOR	1.40
INN9	TERM INSULATOR	1.40
JMP10	TERM JUMPER	2.59
JMP9	TERM JUMPER	7.73
KEY10	KEY	.98
KIT161	TERM STUD	72.15
KIT162	TERM STUD	72.15
KIT163	TERM STUD	75.97
KIT164	TERM STUD	73.78
KIT165	TERM STUD	73.78
KIT166	TERM STUD	75.97
KIT167	UNL MANIFOLD	1,152.03
KIT168	UNL MANIFOLD	1,188.46
KIT169	UNL MANIFOLD	1,092.13
KIT180	GASKET SET	154.25
KIT190	UNL CONT KIT	394.32
KIT259	VALV REPL KIT	50.46
KIT260	VALV REPL KIT	85.19
KIT261	MOTOR KIT	FACTORY
KIT262	MOTOR KIT	FACTORY
KIT269	UNL HOLD DOWN KIT	18.23
KIT277	PROT TERM ASSY	17.55
KIT278	PWR TERM ASSY	9.56
KIT307	OIL COOL KIT R12	436.64
KIT308	OIL COOL KIT R22/502	488.87
KIT309	OIL EQUAL KIT	115.83
KIT314	KIT	63.60
KIT330	KIT OIL RETURN	145.32
KIT333	OIL EQUALIZATION	79.68
KIT334	TERM STUD	98.75
KIT335	TERM STUD	101.08
KIT336	TERM STUD	90.73
KIT337	INT UNL CONV KIT	FACTORY
KIT339	ENCL TUBE ASSY	70.65
KIT342	GASKET SET	85.43
KIT344	SEAL ASSY SEL1A	104.81
KIT346	SEE KIT260	.00
KIT353	GASKETS	22.73
KIT354	GASKETS	33.33
KIT355	GASKETS	37.08
KIT356	SUCT & DISCH VALVE K	46.15
KIT357	CONV OLD STYLE OR NO	425.60
KIT358	CONV OLD STYLE OR NO	413.35
KIT367	KIT GASKET	115.30
KIT369	KEY	3.73
KIT370	UNL CLOS P&SP	56.30
KIT372	KIT UNLOADER PST	89.72
KIT373	SUCT & DISCH VALVE K	48.55
KIT374	UNL MANIFOLD	1,046.50

PART NUMBER	DESCRIPTION	LIST PRICE
LNR12	LINER NON-UNLOADED	168.75
LNR13	LINER NON-UNLOADED	278.10
LNR16	LINER UNLOADED	278.10
LNR4	LINER UNLOADED	208.96
MUF23	MUFFLER	266.36
NA8	GASKET	.68
NB3	GASKET	.85
NB4	GASKET	.85
NB45T1	PROTECTOR	15.30
NB45T2	PROTECTOR	15.57
NB45T3	PROTECTOR	15.72
NB45T4	KLIXON	16.65
NB45T5	PROTECTOR	18.76
NB45T6	KLIXON	15.04
NB45T7	KLIXON	18.75
NC54T10	CAPACITOR	27.66
NC54T11	SEE CPR17	.00
NC54T4	CAPACITOR	18.97
NUT6	SIGHT GLASS RET NUT	15.57
PAT10T1	BLUE SPRAY PAINT	12.90
PAT21T1	BEIGE SPRAY PAINT	.00
PIN21	PIN	9.41
PIN40	PIN PISTON	17.55
PIN41	PIN PISTON	14.42
PIN80	CRANK SHAFT PIN	1.40
PIN82T1	THRUST WASH ROLL PIN	1.40
PIN83T5	VALVE PLATE PIN	4.14
PIN84	UNL PIN 010 OS	8.23
PLT104A	VALVE PLATE ASSY	232.70
PLT178	ORIFICE PLATE	6.13
PLT180	ORIFICE PLATE	14.73
PLT2001A	VALVE PLATE ASSY	144.83
PLT2002A	VALVE PLT ASSY	211.27
PLT222A	TERM PLATE ASSY	297.36
PLT232	BAFFLE PLATE	33.04
PLT233	BAFFLE PLATE	33.61
PLT265	SPACER PLATE	297.38
PLT267	SPACER PLATE	362.66
PLT301A	VALV PLATE ASSY RH	356.72
PLT302A	VALV PLATE ASSY RH	339.73
PLT304A	VALV PLATE ASSY LH	330.83
PLT305A	VALVE PLATE ASSY LH	242.04
PLT310A	VALVE PLATE ASSY LH	333.48
PLT311A	VALVE PLATE ASSY LH	328.06
PLT312A	VALV PLATE ASSY LH	256.63
PLT313A	VALV PLATE ASSY LH	251.54
PLT317A	VALVE PLATE ASSY	115.62
PLT318A	SEE PLT2002A	.00
PLT322	SPACER PLATE LH	264.86
PLT503A	VALVE PLATE ASSY	375.09
PLT507A	VALV PLATE ASSY RH	599.11
PLT508A	VALV PLATE ASSY RH	566.45
PLT509A	VALV PLATE ASSY LH	404.39
PLT585A	VALV PLATE ASSY LH	480.08
PLT586A	VALV PLATE ASSY RH	488.87
PLT64A	VALVE PLATE ASY	251.94
PLT85A	VALVE PLATE ASSY	93.80
PLT959A	VALVE PLATE ASSY	128.91
PLT960A	VALVE PLATE ASSY	159.53
PLT963A	VALVE PLATE ASSY	216.88
PLT964A	VALVE PLATE ASSY	160.62
PLU23	ORIFICE PLUG	5.78
PLU5	MAGNET PIPE PLUG	3.68
PLU9	PLUG CAP CONT	46.95
PMP5A	OIL PUMP ASSY	276.90
PMP6A	OIL PUMP ASSY	439.52
PMP85A	OIL PUMP	166.22
PST100A	UNL PISTON ASSY	98.06
PST106AT1	PISTON W/PIN/RNGS	77.68
PST106T1	PISTON W/PIN	61.60

PART NUMBER	DESCRIPTION	LIST PRICE
PST16A	PISTON ASSY	54.10
PST19A	PISTON ASSY	48.73
PST21A	PISTON ASSY	62.51
PST22A	PISTON ASSY	89.86
PST25A	PISTON ASSY	38.11
PST38A	SEE ASY864	.00
PST51A	SEE ASY862	.00
PST54A	PISTON ASSY	68.41
PST57AT1	PISTON W/PIN/RNGS	80.80
PST57T1	PISTON W/PIN	44.00
PST58AT1	PISTON ASSY/PIN/RNG	65.64
PST58T1	PISTON W/PIN	62.84
PST63T1	PISTON W/PIN	81.07
PST63AT1	PISTON ASSY	93.76
PST64	SEE PST106T1	.00
PST64A	SEE PST106AT1	.00
PST65AT1	PISTON W/PIN/RNGS	159.04
PST65T1	PISTON W/PIN	122.16
PST68	PISTON	27.25
POS15	TERM POST SEE GA1377	FACTORY
RF2MB42	SEE 2MB42	.00
RF330B42	GASKET	1.55
RF500P95	SEE RF50095	.00
RF50095	VAL PLT ASY RF500P95	168.39
RF65042	SEE 650B42	.00
RF650P95	SEE RF65095	.00
RF65095	VAL PLT ASY RF650P95	178.27
RNG101T1	OIL SCRAPER RING	4.83
RNG102T1	COMPRESSION RING	2.54
RNG112	RING	2.05
RNG116	RING	2.41
RNG120	RING	2.05
RNG15	PISTON RING	5.52
RNG16	PISTON RING	5.52
RNG17	PISTON RING	5.52
RNG18	PISTON RING	3.56
RNG19	PISTON RING	5.52
RNG195A	UNL PISTON RING	39.40
RNG20	PISTON RING	5.52
RNG201A	UNL PISTON RING	39.40
RNG21	PISTON RING	5.52
RNG22	PISTON RING	5.52
RNG220	O RING 0458P37	2.29
RNG23	PISTON RING	5.52
RNG24	PISTON RING	6.28
RNG25	PISTON RING	5.52
RNG26	PISTON RING	5.52
RNG27	PISTON RING	5.52
RNG28	PISTON RING	5.52
RNG29	PISTON RING	5.52
RNG292	O RING	2.20
RNG31	RING	4.59
RNG37	COMP RING	2.37
RNG39	OIL RING	4.24
RNG45	COMP RING	3.56
RNG46	OIL RING	2.96
RNG66	OIL RETAIN RING	43.14
RNG67	OIL RETAINING RING	169.67
RNG72T1	COMPRESSION RING	2.20
RNG73T1	OIL SCRAPER RING	3.31
RNG89	RING	1.70
RNG92	RING	1.87
RTR15A	DISC RETAINER ASSY	244.34
RTR22	PISTON PIN RETAINER	4.89
RTR25	RETAINER	1.23
ROD10	PISTON ROD	72.41
ROD14	ROD UNLDR	38.96
ROD21A	CONN ROD ASSY	128.60
ROD24A	CONN ROD ASSY	200.95
ROD42A	CONN ROD ASSY	123.35

PART NUMBER	DESCRIPTION	LIST PRICE
ROD43	CONN ROD	113.58
ROD48A	CONN ROD ASSY	170.60
ROD50	CONN ROD	41.65
ROD72	CONNECTING ROD	108.37
ROD73	CONNECTING ROD	107.95
ROD74	CONNECTING ROD	122.11
ROD75	CONNECTING ROD	121.60
ROD79	CONN ROD	56.66
R2002P970	GASKET SET	20.01
R5002P970	GASKET SET	31.08
SCR121	COV SCR & NO	1.40
SCR18	SOCKET HD CAP	1.40
SCR30	SCREW	.42
SCR31	SCREW	.42
SCR69	SCREW 0533P09	.42
SEL1A	SEE KIT344	.00
SEL3A	SHAFT SEAL ASSY	140.21
SEL4A	SEAL ASSY	174.53
SEL6	SEAL OIL CONT	55.52
SET1	GASKETS COMP SET	152.81
SET10	RING SET COMP	30.25
SET11	RING SET COMP	40.46
SET12	RING SET COMP	50.37
SET13	RING SET COMP	26.80
SET14	RING SET COMP	35.70
SET16	RING SET COMP	53.51
SET17	RING SET COMP	71.40
SET18	RING SET COMP	89.21
SET19A3	HEAD GASKET SET	31.95
SET19A4	HEAD GASKET SET	37.06
SET19A5	HEAD GASKET SET	54.06
SET2	GASKETS COMP SET	183.17
SET20B3	HEAD GASKET SET	32.14
SET20B4	HEAD GASKET SET	23.28
SET20B5	HEAD GASKET SET	46.13
SET21B10	HEAD GASKET SET	71.66
SET21B6	HEAD GASKET SET	52.46
SET21B8	HEAD GASKET SET	63.95
SET3	GASKETS COMP SET	131.97
SET4	GASKETS COMP SET	85.39
SET44	GASKETS COMP SET	93.11
SET45	GASKETS COMP SET	102.15
SET46	GASKETS COMP SET	115.86
SET47	GASKETS COMP SET	120.76
SET5	GASKETS COMP SET	94.64
SET53	PISTON RING SET	7.72
SET54	PISTON RING SET	8.73
SET6	GASKETS COMP SET	106.25
SET7	GASKETS COMP SET	110.07
SET8	GASKETS COMP SET	114.48
SET9	GASKETS COMP SET	125.93
SE61742	GASKET	2.76
SE81142	GASKET	5.28
SHF11	SHAFT	273.14
SPC14	CRANKSHAFT SPACER	14.67
SPC15	CRANKSHAFT SPACER	30.95
SPG31	UNLOADER SPRING LNR	.82
SRA10	OIL CONTROL SCREEN	.60
SRA18	OIL STRAINER	75.87
SRA19C	OIL STRAINER	63.30
SRA20	SUCTION STRAINER	144.24
SRA21	SUCTION STRAINER	245.76
SRA22	SUCTION STRAINER	242.02
SRA27	SUCTION STRAINER	51.65
SRA29	USE FLR29	.00
SRA32	OIL STRAINER	46.95
SRP2	PISTON ROD	68.24
SRP3	PISTON ROD	74.14
SRP4	PISTON ROD	69.70
SRP5	PISTON CONNECT ROD	160.75

PART NUMBER	DESCRIPTION	LIST PRICE
THT3	THERMOSTAT	18.95
TMR65	TIMER	68.69
TMR66	TIMER	62.81
TUB2057T1	TUBING	20.08
TUB2058T1	TUBING	25.93
TUB2059	TUBING	18.59
TUB2060	TUBING	26.27
TUB2061	TUBING	19.71
TUB2062	TUBING	26.27
TUB2433	OIL EQUALL TUBE	25.57
VAL161	VALVE	102.31
VAL258	OIL RELIEF VALVE	14.47
VAL260	VALVE DISC	4.32
VAL357	UNL SHUTTLE VALVE	328.85
VAL361	DISC SERVICE VALVE	25.09
VAL362	DISC SERVICE VALVE	33.44
VAL363	SUCT SERVICE VALVE	28.39
VAL365	VALVE SUCT	1.40
VAL372	DISC SERVICE VALVE	77.85
VAL373	DISC SERVICE VALVE	49.80
VAL374	SUCT SERVICE VALVE	50.18
VAL381	DESUPERHEAT VALVE	236.17
VAL438	UNL SOLENOID VALVE	113.10
VAL496	FOAM CONT VALVE	10.83
VAL53	SUCTION LINE VALVE	209.52
VAL54	SUCTION LINE VAL	198.55
VAL557	DESUPERHEAT VALV R12	119.09
VAL559	DESUPERHTG VALV R220	116.65
VAL56	SUCTION LINE VALVE	448.46
VAL57	SUCTION LINE VALVE	295.63
VAL58	SUCTION LINE VALVE	424.16
VAL59	DISC LINE VALVE	132.38
VAL615	SUCT SERV VALV	38.52
VAL616	SUCT SERV VALV	40.66
VAL71	PRESSURE RELIEF VAL	37.45
VAL72	PRESSURE RELIEF VAL	67.88
VAL83	DISCH SERV VALVE	133.71
WAS20	THRUST WASHER	24.01
WAS21	THRUST WASHER	48.17
WAS22	WASHER MOTOR	20.10
WAS23	WASHER MOTOR	4.82
WAS30	SPLINE WASHER	6.83
WAS34	WAVY WASHER	1.78
WAS35	WAVY WASHER	3.56
WAS36	THRUST WASHER	17.55
WAS37	ROTOR LOCK WASHER	5.61
WAS75	WASHER	.88
WAS88	ROTOR LOCK WASHER	7.12
010P01	LOCKWASHER	.42
010P203	BRASS NUT	.53
0102G27	PIN	.42
011P09	BOLT	.53
011P10	BOLT	.53
011P11	SCREW	.42
011P13	BOLT	.53
011P17	BOLT	.53
011P19	BOLT	.53
011P29	BOLT	.53
012P11	BOLT CYL TO CRNK	.53
012P13	SCREW	.42
012P15	CAP SCR 3/8 16X1 1/2	.53
012P19	SCREW	.42
012P216	LOCKWASHER	.68
012P23	CAP SCR 3/8 16X2 1/2	.53
012P27	SCREW	.42
012P31	BOLT	.68
012P33	BOLT 3/8 16X3 3/4 LG	.85
012P37	BOLT 3/8 16X4 1/4 LG	1.47
012P43	CAP SCR 3/8 16X5	1.16
014P01	WASHER	.53

PART NUMBER	DESCRIPTION	LIST PRICE
014P17	CAP SCR 1/2 13X1 3/4	.68
014P29	SCR ADP 1/2 X 3 1/2	1.14
014P31	CAP SCR 1/2 13X3 1/2	1.40
016P04	LOCKWASHER	.53
016P15	BOLT 5/8 11X1 1/2 LG	.98
016P35	CAP SCR	1.27
016P47	CAP SCREW 5/8 11X5 1	2.59
0161P210	NUT LOCK SCREW	.68
0162P00	NUT	.63
017P04	WASHER	.68
0212P02	CAP-ELBOW	.63
028P07	BOX SCR & NU	.53
028P17	BOX SCR & NO	.53
034P10	SCREW-OIL PMP	.42
0341P13	SCR FLG 5/16 X 1/2	.68
0346P19	SCR VAL 1/2 X 2	1.40
035P24	OIL PLUG	.68
0386P03	TEE	4.01
0413G03	SEE CPR18	.00
0413G04	SEE CPR19	.00
0413G05	SEE CPR20	.00
0413G06	SEE CPR18	.00
0414G03	SEE CPR22	.00
0414G06	SEE CPR23	.00
0458P16	O RING SEAL HOUSING	2.59
0458P17	O RING SEAL HOUSING	2.63
0458P20	O RING-USE RNG 292	.00
0458P29	O RING	2.59
0458P34	USE 0458P35	.00
0458P35	RING	2.68
0458P37	SEE RNG220	.00
050148A1	OIL CONT ASSY ASY230	26.36
051P36	CONNECTOR	4.03
051P52	CONNECTOR	2.59
0533P09	SEE SCR69	.00
055P02	PLUG	.42
055P61	PLUG	.42
055P62	PLUG	1.40
055P70	PIPE PLUG	.68
055P71	PLUG	1.75
055P80	PLUG	1.92
0580P11	RETAINER RING	.53
0580P15	RETAINER RING	.53
0580P21	RETAINER RING	.53
0580P23	RETAINER RING	.68
0581P16	RETAINER RING	.65
0581P21	RETAINER RING	5.20
0562A05	SCREW	5.20
0609P45	VALVE	36.74
0609P55	PRES RELIEF VALVE	54.54
0609P75	DISCH PRESS REL VAL	64.66
065P05	SCREW OIL SCREEN	.68
065P29	DRIVE SCREW	.53
065016	SEE A650B16	.00
066P03	KEY LOCK SHAFT	2.04
066P03	KEY	2.04
066P18	KEY	2.12
066P29	KEY	1.36
066P30	KEY	1.53
066P58	KEY LOCK	.63
0693P00	RETAINER	.45
0693P01	RETAINER	.56
0694P00	OIL DRAIN VALV ADAP	3.73
072P01	ELBOW	2.59
072P02	ELBOW	2.66
1-10MP968	RING SET	39.77
10MA66	PIN	28.62
10MB510	BODY	4.19
10M437	SEAL	126.60
100P135	OIL DRAIN VALVE	13.06
12MP968	RING SET	56.99
125P006	THRUST BALL	1.40
1250B16	GASKET	2.15
135A75	BEARING PLUG	6.75
135A77	THRUST DIS	6.22
13579	GASKET	1.60
140A185	OIL CONT FLAPPER	4.64
140A333	OIL CHAMB PLATE	2.63
140B21	ECCENTRIC	101.59
140B22	PISTON ROD	40.87
140B42	GASKET	2.31
140C394	CYLINDER	186.78
140P06	THRUST BALL	.53
140P192	SEE VAL361	.00
140P968	RING SET	32.57
140P970	GASKET SET	10.17
2MA185	OIL CONT FLAPP	2.59
2MA195	SEE 2000195	.00
2MB150	BEAR PLUG END	26.25
2MB151	BEAR SEAL END	28.33

PART NUMBER	DESCRIPTION	LIST PRICE
2MB42	GASKET RF2MB42	1.88
2MB48	SEE 200048	.00
2MB53	NUT	29.81
2MB75	BEARING PLUG	11.60
2MB93	SEE WAS30	.00
2MB94	NUT LOCKING	6.75
2MC762	CYLINDER	419.93
2MD169	HEAD	128.83
2MP968	RING SET	42.92
2M966	BRGSET 2MB150/2MB151	57.58
20MA728	SIGHTGLASS COV PLATE	3.12
20MB87	GASKET	2.59
20M691	SEE 20000A691	.00
200P135	VALVE	16.99
2000B445	END PLATE GASKET	1.40
20000A691	SIGHTGLASS GKT20M691	.53
2000195	PLATE COVER 2MA195	11.11
2000437	SEAL	83.53
200048	GASKET 2MB48	1.62
200079	GASKET	1.78
2001A428	GASKET OIL SCREEN	.68
2001A612	SIGHTGLASS	7.84
2001A613	SIGHTGLASS	2.88
2002P971	BEARING PLUG	20.06
25P135	VALVE	10.76
330A16	GASKET CRNK TO CYL	2.62
330B437	SEAL ASSY	81.92
330B458	SHAFT	173.50
330B48	GASKET	.59
330B50	HEAD	36.73
330B82	GASKET	.84
330C394	CYLINDER	269.44
330P192	SEE VAL362	.00
330P874	OIL RING	4.59
330P876	RING	3.63
330P968	RING SET	23.56
330P970	GASKET SET	11.70
330445	GASKET	1.40
40MA613	GASKET	2.29
40MA691	GASKET	2.44
40MA78	GASKET	6.83
40MC16	GASKET	7.34
40M437	SEAL ASY	225.05
40M48	GASKET	8.75
40M966	BRSET40MA150/40MA151	391.86
40M970	GASKET SET	96.69
500A75	BEARING PLUG	15.12
500B16	GASKET	1.75
500B437	SEAL ASSY	75.05
500B458	SHAFT	68.38
500B48	GASKET	2.76
500C394M	CYLINDER	183.51
500P875	RING	6.36
500P968	RING SET	34.90
500P970	GASKET SET	20.06
5000B445	GASKET SEAL ASSY	3.14
500082	GASKET	.85
500187	SUCTION SCREEN	5.26
5002A397	SUCTION SCREEN	15.82
5002A488	PLATE COVER	17.46
5002A66	PIN	11.11
5002P874	RING	7.75
5002P875	RING	7.75
5002P876	RING	7.75
50079	GASKET	5.34
5301B48	GASKET	3.22
650B150	BEARING	35.45
650B151	BEAR SEAL END	15.08
650B42	GKT CYL/VLPL RF65042	1.55
650B48	GASKET	3.82
650B53	LOCK NUT ECCENTRICP	13.91
650B93	SPLINE WASHER	4.72
650B94	LOCK NUT ECCENTRIC	6.11
650C04	SHAFT	281.58
650C21	ECCENTRIC	142.90
650C50	HEAD	93.33
650P875	RING	3.29
650P966	BRSET650B150/650B151	68.77
650P968	RING SET	31.08
650P970	GASKET SET	12.64
650437	SEAL ASSY	72.50

548

Exhibit C-5

FORM NO. 5140B

Supersedes Form No. 5140A

DUNHAM-BUSH

INSTALLATION INSTRUCTIONS

LOW SILHOUETTE ELECTRIC DEFROST UNIT COOLERS ECLS SERIES 'C'

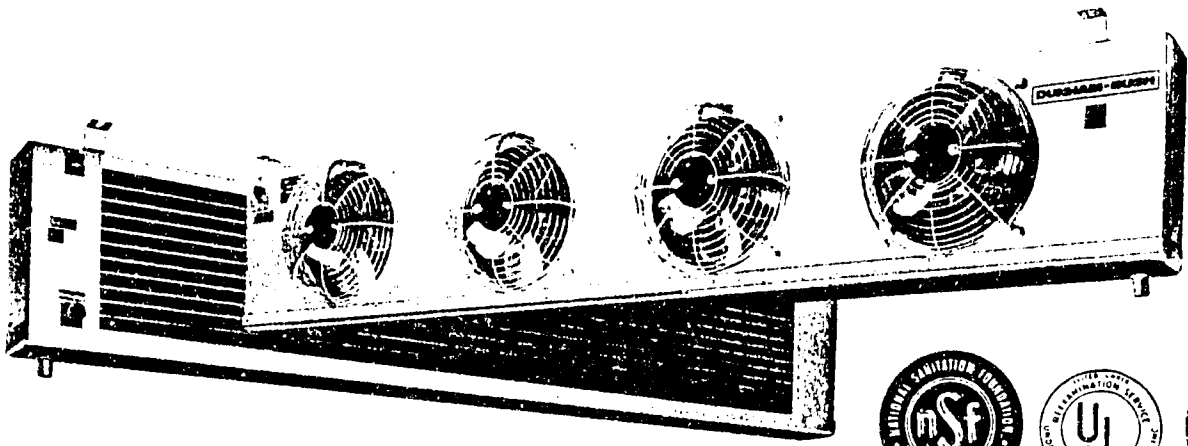

Dunham-Bush ECLS units are suitable for installation in room temperature from 32° to -30°. They can be used with R-12, R-22, or R-502.

INSTALLATION OF UNIT

The ECLS unit should be hung from the ceiling of the refrigerated space using the mounting channels provided on the unit. Since these channels establish the proper pitch of the drain pan, care should be taken to be sure that the ceiling is level. Units should be hung with the back of the unit a **minimum of one foot away from the wall.** Installations near or over the refrigerator door should be avoided as this will have an adverse effect on proper defrosting.

REFRIGERATION CYCLE

Refrigerant piping should be installed in accordance with good practice. A liquid line solenoid valve (230 volt coil) **must** be used. All ECLS unit coolers require externally-equalized expansion valves.

Refrigerant connections are made all at one end of the unit. Suction and liquid connections are brought out the back of the unit for easy field connection. An auxiliary drip pan is provided with the unit for field installation under the expansion valve. The bulb of the expansion valve should be strapped to the suction line. **Expansion valves are not furnished with the unit.**

ECLS(C) ELECTRIC DEFROST UNIT COOLERS & SYSTEMS

Model	Fans		Motor Watts @ 240V†	Connections			Electrical Defrost Data @ 240 Volt**		Def Kit No.	Approx. Shipping Weight
	Qty.	Size		Liquid FL	Suction OD	Drain OD	Amps	Watts		
ECLS 45	1	10"	105	1/2"	5/8"	1⅛"	4.38	1,050	1D	19
ECLS 65	2	10"	210	1/2"	5/8"	1⅛"	6.25	1,500	1D	28
ECLS 85	2	10"	230	1/2"	5/8"	1⅛"	8.13	1,950	1D	33
ECLS 130	3	10"	315	1/2"	5/8"	1⅛"	11.88	2,850	1D	48
ECLS 170	4	10"	420	1/2"	1⅛"	1⅛"	15.63	3,750	1D	64
ECLS 210	5	10"	525	1/2"	1⅛"	1⅛"	19.38	4,650	1D	77
ECLS 270	6	10"	630	5/8"	1⅛"	1⅛"	23.13	5,550	1D	92
ECLS 300 DUAL (1-ECLS 130 & 1-ECLS 170)	3	10"	315	1/2"	5/8"	1⅛"	27.51	6,600	1DR	112
	4	10"	420	1/2"	1⅛"	1⅛"				
ECLS 340 DUAL (2-ECLS 170)	4	10"	420	1/2"	1⅛"	1⅛"	31.26	7,500	1DR	123
	4	10"	420	1/2"	1⅛"	1⅛"				
ECLS 380 DUAL (1-ECLS 170 & 1-ECLS 210)	4	10"	420	1/2"	1⅛"	1⅛"	35.01	8,400	2DR	141
	5	10"	525	1/2"	1⅛"	1⅛"				
ECLS 420 DUAL (2-ECLS 210)	5	10"	525	1/2"	1⅛"	1⅛"	38.76	9,300	2DR	154
	5	10"	525	1/2"	1⅛"	1⅛"				
ECLS 480 DUAL (1-ECLS 210 & 1-ECLS 270)	5	10"	525	1/2"	1⅛"	1⅛"	42.51	10,200	2DR	169
	6	10"	630	5/8"	1⅛"	1⅛"				
ECLS 540 DUAL (2-ECLS 270)	6	10"	630	5/8"	1⅛"	1⅛"	46.25	11,100	2DR	184
	6	10"	630	5/8"	1⅛"	1⅛"				

† Optional 120/1/60 fan motors are available on special order.

** Optional 480 volt single phase defrost heaters are available on special order. 480 volt heater amps will be 50% of 240 volt data given above. Defrost heaters may be field changed for three phase operation, 240 volt standard unit or 480 volt special.

DIMENSIONS AND CONNECTIONS

MODEL	DIMENSIONS A	B	C
ECLS 45	27 13/16	18½	–
ECLS 65	36 9/16	27¼	–
ECLS 85	45 5/16	36	–
ECLS 130	62 13/16	53½	–
ECLS 170	80 9/16	71	–
ECLS 210	97 13/16	88½	44¼
ECLS 270	115 5/16	106	53

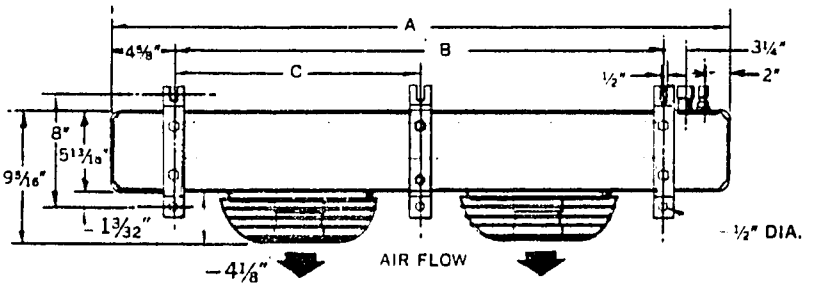

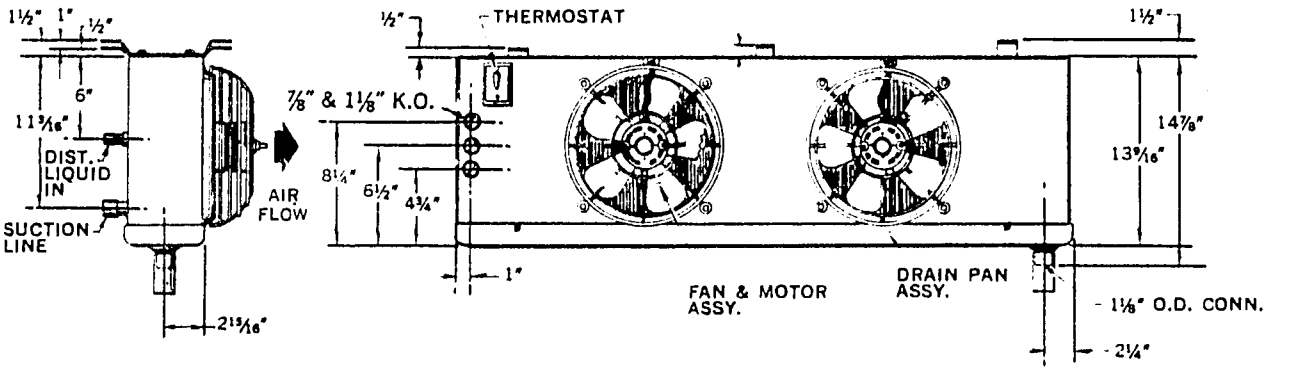

DRAIN LINE

The drain line should be run with 7/8" O.D. minimum tubing and should be suitably pitched. The drain line should be trapped at the warm end to prevent entry of warm air into the refrigerated area.

DRAIN LINE HEATER SELECTION

240 Volt			
Part No.	Length (Ft.)	Watts	Amps
210042	12	72	.3
210039	17	102	.4
210035	30	180	.7
210037	40	240	1.0
210040	80	480	2.0

Where the nature of the installation makes it impossible to pitch the drain line properly, an electrical drain line heater is recommended.

For the correct length of drain line heater cable, use approximately 5 feet of cable for each running foot of drain line in the refrigerated area. In order to minimize the possibility of cable burnouts, do not "criss cross", "overwrap", or insulate the drain line heater. Wiring for drain line heaters is shown on the attached wiring diagrams.

ELECTRIC DEFROST

ECLS units are constructed to defrost with 208/230/1/60 electrical supply. Field wiring should be installed in accordance with local and National Electrical Codes.

Kit components are shipped each in its own NEMA enclosure for field installation.

ECLS ELECTRIC DEFROST COMBINATIONS

ECLS SYSTEM	EVAPORATOR	208/230/1/60	
ECLS – 45	ECLS – 45	KIT 1D	Dia. A1–35348
ECLS – 65	ECLS – 65	KIT 1D	Dia. A1–35348
ECLS – 85	ECLS – 85	KIT 1D	Dia. A1–35348
ECLS – 130	ECLS – 130	KIT 1D	Dia. A1–35348
ECLS – 170	ECLS – 170	KIT 1D	Dia. A1–35348
ECLS – 210	ECLS – 210	KIT 1D	Dia. A1–35348
ECLS – 270	ECLS – 270	KIT 1D	Dia. A1–35348
ECLS – 300	ECLS – 130 ECLS – 170	KIT 1DR	Dia. A1–35196
ECLS – 340	(2) ECLS – 170	KIT 1DR	Dia. A1–35196
ECLS – 380	ECLS – 170 ECLS – 210	KIT 2DR	Dia. A1–35343
ECLS – 420	(2) ECLS – 210	KIT 2DR	Dia. A1–35343
ECLS – 480	ECLS – 210 ECLS – 270	KIT 2DR	Dia. A1–35343
ECLS – 540	(2) ECLS – 270	KIT 2DR	Dia. A1–35343

SEQUENCE OF OPERATION

The wiring diagram shows the unit in the normal refrigeration position. Switch "A" in the time clock is closed and provides power to the fan motors and to the liquid line solenoid.

1. When the time clock calls for a defrost, switch "A" opens and switch "B" closes.
2. When switch "A" opens, the fan motors stop and the liquid line solenoid closes, causing the compressor to pump down and stop on its own low pressure cut-out switch.
3. When switch "B" closes, electrical current is supplied to the defrost heaters which warm the metal of the coil causing the ice to melt.
4. When the ice is melted, the temperature of the metal rises above 32°F. The "limit thermostat" installed in the evaporator senses this rising temperature. When the thermostat setting is reached, the switch on the thermostat leading to the motors opens and the switch leading to the "reset solenoid" (terminal strip position 4) closes. This terminates the defrost.
5. When the thermostat energizes the circuit through terminal strip position 4 to the "reset solenoid", the clock switches return to their original position with "A" closed and "B" open.
6. The solenoid valve is now energized and opens, permitting the compressor to run and cool down the metal in the coil.
7. The fans cannot run because the "limit thermostat" is in the terminating position, holding the motor circuit open.
8. When the coil temperature is below freezing, the "limit thermostat" returns to its original position, permitting the fan motors to run. The unit is now back on normal cycle.
9. On multiple evaporator installations, the sequence is the same except that each evaporator will shut off its own defrost current supply when it is defrosted **independent of the other evaporator** and will then sit idle until the defrost sequence is completed by the other evaporator. This prevents overheating of the individual evaporators.

FIELD ADJUSTMENT

After the unit has operated long enough to settle down and the refrigerated space has pulled down to the approximate operating temperature, the expansion valve should be carefully adjusted for proper distribution and feed. This is essential to assure uniform frost formation on the coil.

The number of defrosts per day and the time at which they occur is controlled by small pins which screw into holes provided on the outer dial of the time clock. It is suggested that an initial setting for two or three defrosts per 24 hours be used. If ice build up is heavy, additional defrost per 24 hour period may be necessary.

Defrost is terminated by a factory installed switch which has an adjustment knob on the back side of the unit. This control carries the legend "Duration – Shorter Longer". For initial start up, it is recommended that the defrost control be set towards the word "Shorter" as far as it will go. If this does not provide a long enough defrost to completely clear the coil of frost, a slightly longer defrost can be used. It is essential that all frost be clear from the coil during each defrost period.

A normal defrost requires from 15 to 30 minutes and is terminated by the temperature sensing defrost control. For protection of the refrigerator and its contents, a "Fail Safe" control is provided on the time clock which will terminate the defrost at a pre-set time limit, regardless of the function of the defrost control. This "Fail Safe" is adjusted with a small pointer on the dial of the time clock. A setting of 35 minutes is suggested.

SPECIFICATIONS FOR CONTROL KITS

KIT NO.	CURRENT	COMPONENTS	DUNHAM-BUSH PART NUMBER
1–D	208/230/1/60	(1) Timer	210447
1–DR	108/230/1/60	(1) Timer (2) DPDT Relay (3) Relay Case	210447 210324 210627
2–DR	208/230/1/60	(1) Timer (2) DPDT Relay (2) Relay Case (1) 2 Pole 40 AMP Contactor	210447 210324 210627 210425

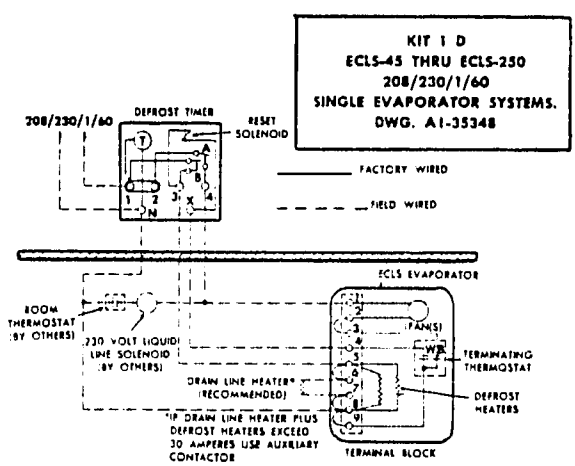

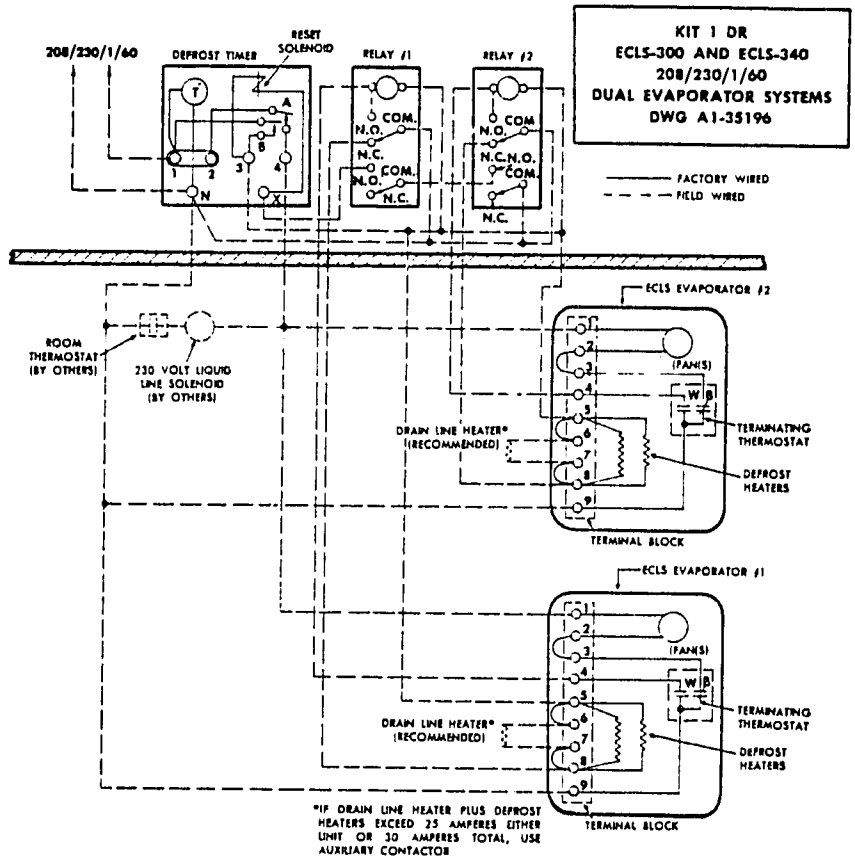
KIT 1 DR
ECLS-300 AND ECLS-340
208/230/1/60
DUAL EVAPORATOR SYSTEMS
DWG A1-35196
208/230/1/60
DEFROST TIMER
RESET SOLENOID
RELAY #1
RELAY #2
FACTORY WIRED
FIELD WIRED
ECLS EVAPORATOR #2
ECLS EVAPORATOR #1
ROOM THERMOSTAT (BY OTHERS)
230 VOLT LIQUID LINE SOLENOID (BY OTHERS)
DRAIN LINE HEATER* (RECOMMENDED)
TERMINATING THERMOSTAT
DEFROST HEATERS
TERMINAL BLOCK
*IF DRAIN LINE HEATER PLUS DEFROST HEATERS EXCEED 25 AMPERES EITHER UNIT OR 30 AMPERES TOTAL, USE AUXRIARY CONTACTOR

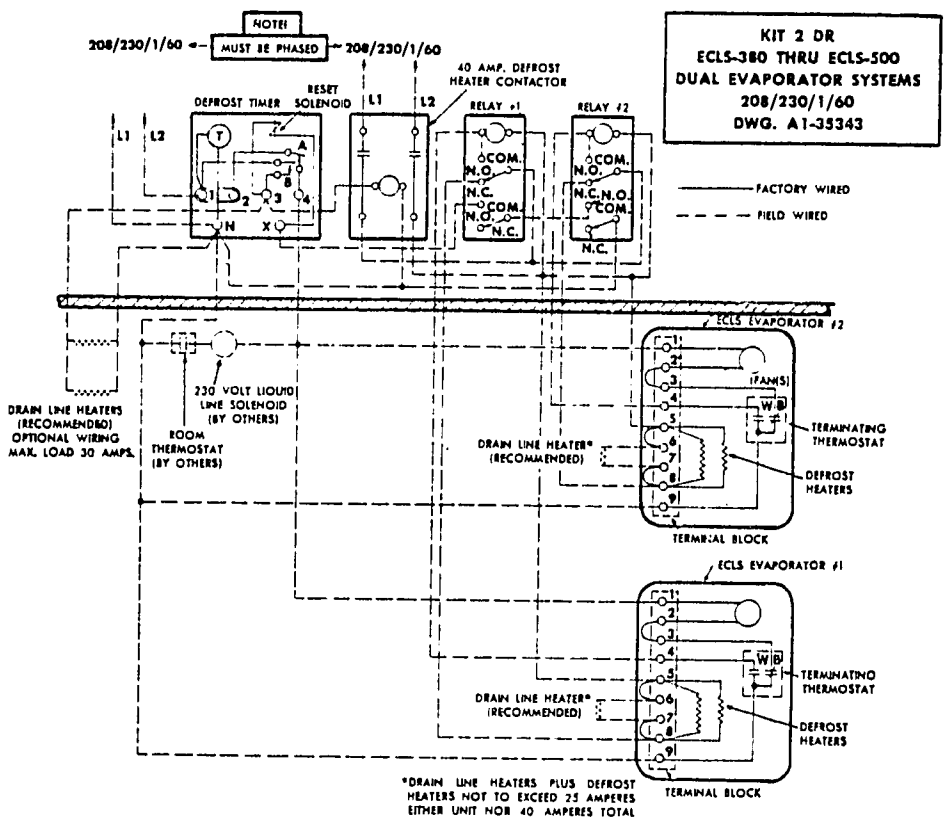
KIT 2 DR
ECLS-380 THRU ECLS-500
DUAL EVAPORATOR SYSTEMS
208/230/1/60
DWG. A1-35343
NOTE!
MUST BE PHASED
208/230/1/60
40 AMP. DEFROST HEATER CONTACTOR
DEFROST TIMER
RESET SOLENOID
RELAY #1
RELAY #2
FACTORY WIRED
FIELD WIRED
ECLS EVAPORATOR #2
ECLS EVAPORATOR #1
DRAIN LINE HEATERS (RECOMMENDED) OPTIONAL WIRING MAX. LOAD 30 AMPS.
230 VOLT LIQUID LINE SOLENOID (BY OTHERS)
ROOM THERMOSTAT (BY OTHERS)
DRAIN LINE HEATER* (RECOMMENDED)
TERMINATING THERMOSTAT
DEFROST HEATERS
TERMINAL BLOCK
*DRAIN LINE HEATERS PLUS DEFROST HEATERS NOT TO EXCEED 25 AMPERES EITHER UNIT NOR 40 AMPERES TOTAL

CONTRACT NO. AID/OTR-C-1629
PIO/T NO. 263-026-3-90315
WBEC PROJECT NO. 4631
PROCUREMENT AND TECHNICAL REVIEW
FOR USAID CAIRO, EGYPT

This report section pertains to the following project:

Importer:	Kishk
Order No:	EA 10063 (Partial)
L/C Bank:	National Bank of Egypt
U.S. Bank L/C No:	68966
L/C Amount:	$119,800.00
Egypt L/C No.:	9527
SER/COM:	#4A

EQUIPMENT IDENTIFICATION

The equipment and spare parts lists from the suppliers final invoice and the equipment list from the contractor's on-site inspection are itemized in tabular form.

Consistency of the two parts lists may be easily established. This form also indicates compliance with the proforma invoice, contract and bank appraisal report.

Equipment details, such as catalog and serial numbers are shown on the contractor's on-site Equipment Identification form following the Equipment and Spare Parts Lists.

EQUIPMENT LIST

CONTRACTOR ON-SITE INSPECTION 2-8-81	DUNHAM-BUSH INVOICE # EA10063 Dated 8-29-79	DOCUMENT VERIFICATION		
		PROFORMA INVOICE	CONTRACT LOCAL	BANK MISR, CAIRO REPORT
(4) Air Cooled Condenser w/compressor Model CE50C-1-ECLS210-1-Q (5) Evaporator Coolers Model ECLS-210 (1) Chiller Pkg. w/screw compressor Model IPCX 230-05Q (3) Brine Pumps Model A9D90S-1A	Cooling equipment, controls and accessories as per proforma invoice no. DB/79-7, dated 4/26/79	Dated 4/26/79 (1) PCX Pkg. Chiller no specific model number	None available for review	No appraisal report available for review.

SPARE PARTS LIST

CONTRACTOR ON-SITE INSPECTION 2-8-81			DUNHAM-BUSH INVOICE # EA10063 Dated 2-6-80			COMMENTS
1	BKR 75	BREAKER	2	BKR 75	BREAKER	No spare parts listed on Proforma 4-26-79
2	BKR 74	BREAKER	2	BKR 74	BREAKER	No Contract available for review
4	RLY 126	RELAY	4	RLY 126	RELAY	
2	RLY 129	RELAY	2	RLY 129	RELAY	
4	RLY 135	RELAY	4	RLY 135	RELAY	
2	TMR 114	TIMER	2	TMR 114	TIMER	
4	TMR 83	TIMER	4	TMR 83	TIMER	
2	TMR 86	TIMER	2	TMR 86	TIMER	
2	CNT 175	CONTROL	2	CNT 175	CONTROL	
2	CNT 249	CONTROL	2	CNT 249	CONTROL	
2	SWT 80	SWITCH	2	SWT 80	SWITCH	
2	CNT 232	CONTROL	2	CNT 232	CONTROL	
2	CNT 55	CONTROL	2	CNT 55	CONTROL	
0	CNT 231	CONTROL	2	CNT 231	CONTROL	
2	SWT 82	SWITCH	2	SWT 82	SWITCH	
8	LMP 10	LAMP RED	8	LMP 10	LAMP RED	
4	LMP 11	LAMP AMBER	4	LMP 11	LAMP AMBER	
2	TSF 26	TRANSFORMER	2	TSF 26	TRANSFORMER	
2	GKT 394	GASKET	2	GKT 394	GASKET	
2	GKT 395	GASKET	2	GKT 395	GASKET	
2	VAL 902T2	VALVE	2	VAL 902T2	VALVE	
4	COL 126T1	COIL	4	COL 126T1	COIL	
4	VAL 743T2	VALVE	4	VAL 734T2	VALVE	
2	GKT 259	GASKET	2	GKT 259	GASKET	
0	GKT 143	GASKET	2	GKT 143	GASKET	
0	GKT 62	GASKET	2	GKT 62	GASKET	
4	HTR 71	HEATER	4	HTR 71	HEATER	

SPARE PARTS LIST

CONTRACTOR ON-SITE INSPECTION 2-8-81			DUNHAM-BUSH INVOICE #EA10063 Dated 2-6-80			COMMENTS
2	PMP 93AT9	OIL PUMP	2	PMP 93AT9	OIL PUMP	No spare parts listed on Proforma 4-26-79
36	FLR 125	LILTER	36	FLR 125	FILTER	
4	COL 122T 41	COIL	4	COL 122T 41	COIL	No Contract available for review
2	COL 122T 40	COIL	2	COL 122t 40	COIL	
2	VAL 488	VALVE	2	VAL 488	VALVE	
2	VAL 547	VALVE	2	VAL 547	VALVE	
2	SWT 71	SWITCH	2	SWT 71	SWITCH	
2	SRTD 3A3A10	STARTER	2	SRTD 3A3A10	STARTER	
4	GAG 40	GAUGE	4	GAG 40	GAUGE	
4	GAG 41	GAUGE	4	GAG 41	GAUGE	
6	GAG 47	GAUGE	4	GAG 47	GAUGE	
0	GKT 252	GASKET	2	GKT 252	GASKET	
4	GKT 257	GASKET	4	GKT 257	GASKET	
0	IDR 56A	INDICATOR	2	IDR 56A	INDICATOR	
1	CPL 172	COUPLING	2	CPL 172	COUPLING	
2	GKT 229	GASKET	2	GKT 229	GASKET	
2	SWT 119	SWITCH	2	SWT 119	SWITCH	
2	VAL 734T1	VALVE	2	VAL 734T1	VALVE	
1	VAL 454	VALVE	4	VAL 454	VALVE	
2	VAL 539	VALVE	2	VAL 539	VALVE	
2	VAL 786	VALVE	2	VAL 786	VALVE	
0	RNG 127T1	RING	4	RNG 127T1	RING	
30	BLK 42	BLOCK	48	BLK 42	BLOCK	
0	CNT 233T3	CONTROL	2	CNT 233T3	CONTROL	
2	VAL 449	VALVE	2	VAL 449	VALVE	
0*	A9D1	PUMPS	8	A9D1	PUMPS	

* (3) A9D Pumps were listed previously on the Equipment List.

SPARE PARTS LIST

CONTRACTOR ON-SITE INSPECTION	DUNHAM-BUSH INVOICE # EA10063 Dated 2-6-80	COMMENTS
2 FLR	No reference on Invoice	No spare parts listed on Proforma 4-26-79
1 5 H.P. Motor 380/3/50	No reference on Invoice	No Contract available for review
2 Control T3	No reference on Invoice	
2 Temperature Control SPDT 25/225° F. A19AAF-47	No reference on Invoice	

SER/COM #4A

DATE 2-8-81

IMPORTER: Kishk Ice Factory

MISR BANK 9527

LOCATION: Zifta, Egypt

U.S. L/C 68966

SERVICE: Ice Plant

AMOUNT USD $119,800.00

EQUIPMENT IDENTIFICATION

TYPE Chiller	MODEL IPCX 230-05Q 380/3/50	SERIAL	DPW 2010C79X-2723
Compressor	2010DLF1LOD		79B-009D
Oil Reservoir	27237X20	Natl. Bd.	54182
Condenser	X2723X18	Natl. Bd.	54180
Evaporator	X2723X06	Natl. Bd.	54181
Compressor Motor	(FR.) 444TS 380/3/50		IMA485841-G1-NE

STATUS: Equipment being installed at time of site visit.

REMARKS: No oil pump - shipped seperately

2 Control Panels

1 Breaker Panel

Refrigerant charge is 450# of R-22

SER/COM #4A

DATE _____

IMPORTER: _____ DIB L/C# _____

LOCATION: _____ U.S. L/C _____

SERVICE: _____ AMOUNT _____

EQUIPMENT IDENTIFICATION

	TYPE	MODEL	SERIAL
#1	Brine Pump	A9D90S-1A	300 GPM
	Motor	(FR.) S213JM	6-333002-2
#2	Brine Pump	A9D905-1A	300 GPM
	Motor	(FR.) S213JM	6-333002-2
#3	Brine Pump	A9D90S-1A	300 GPM
	Motor	(FR.) S213JM	6-333002-02

STATUS: Equipment being installed at time of site visit.

REMARKS: _____

SER/COM #4A

DATE _____

IMPORTER: _____ DIB L/C# _____

LOCATION: _____ U.S. L/C _____

SERVICE: _____ AMOUNT _____

EQUIPMENT IDENTIFICATION

	TYPE	MODEL	SERIAL
#1	Air Cooled Condenser	CE50C-1-ECLS210-1-Q	790810124
#2	Air Cooled Condenser	CE50C-1-ECLS210-1-Q	790810125
#3	Air Cooled Condenser	CE50C-1-ECLS210-1-Q	790810127
#4	Air Cooled Condenser	CE50C-1-ECLS210-1-Q	790810126

STATUS: _____

REMARKS: Each of the above equipped with:

1 Compressor Motor

2 Condenser Fan Motors

5 Evaporator Motors

361

SER/COM #4A

DATE _____

IMPORTER: _____ DIB L/C# _____

LOCATION: _____ U.S. L/C _____

SERVICE: _____ AMOUNT _____

EQUIPMENT IDENTIFICATION

	TYPE	MODEL	SERIAL
#1	Evaporator Coolers	ECLS-210	790751-147
#2	Evaporator Coolers	ECLS-210	790751-148
#3	Evaporator Coolers	ECLS-210	790751-144
#4	Evaporator Coolers	ECLS-210	790751-145
#5	Evaporator Coolers	ECLS-210	790751-146

STATUS: _____

REMARKS: _____

EQUIPMENT VALUE

Equipment value will be considered in two parts. PART #1 will determine if the net sale value of the equipment as indicated by Mr. Matava and Mr. Stillson of Dunham-Bush appear to reflect reasonable pricing. Pricing consistancy with competitive pricing quotations will also be considered. PART #2 will determine if the net sale price established in PART #1 is consistant with the final invoice. As stated by AID funding regulations the final invoice amount must reflect reasonable pricing.

PART #1

Competitive quotations were not obtainable on this specific project from the Egyptian Bank. Therefore, the contractor does not have specific competitive pricing information available on this project for evaluation. It is strongly recommended that competitive bids be obtained prior to issuing a letter of credit and kept on file by the lending institution. However, based on previous project experience the "NET SALE PRICE" indicated by Mr. Matava and Mr. Stillson appear to be reasonable, for the equipment and quantity of parts delivered to the job site. However, the contractor does feel that the quantity of spare parts delivered to the job site could be excessive.

The "NET SALE VALUE" of equipment for this project according to Mr. Matava and Mr. Stillson is $84,101.62. An analysis performed by the contractor indicates a reduction of this amount to $65,528.16 is possible by exchanging the spare parts delivered to the job site for the list of spare parts as recommended by the Dunham-Bush factory.

The new figure was arrived at by using equipment costs from the "Kishk Ice Factory Cost Breakdown" presented in a letter from Coolair to Dunham-Bush International dated May 15, 1979. Prices for spare parts are "list" prices quoted from Dunham-Bush's "PCX/DBX Consolidated Parts Price List" form no. 4693A effective March 1981.

1-Chiller (letter from Coolair to D&B dated 5-15-79	$43,640.00
5-Condensing Units w/5 Evaporator Coils Model CE50 C (1) Model ECLS 20	16,230.00
(NOTE: only 4 condensing units were received at the job site at the time of the on site inspection)	
3-Pumps X853	2,559.00
(NOTE: 8 pumps are shown on Cost Breakdown only 3 arrived at job site)	

Spare Parts Recommended by Factory

	* Unit Price	Total
(1) BKR 75	$ 28.62	$ 28.62
(1) BKR 74	28.62	28.62
(3) RLY 126	140.77	422.31
(1) TMR 114	160.80	160.80
(4) TMR 83	351.92	1,407.68
** (1) CNT 232T2	963.31	963.31
(1) CNT 231	87.82	87.82
		$3,099.16

	3,099.16
	$65,528.16

* Prices from Dunham-Bush PCX/DBX Consolidated Parts Price List effective March 1981

** Contractor recommends price verification

To summarize PART #1 of the EQUIPMENT VALUE for this importer:

1) $84,101.62 may be considered a reasonable amount for the equipment and spare parts delivered to the project job site.
2) However, the contractor recommends reduction in the quantity of spare parts to correspond with the factory list of 1 year spare parts (see Exhibit D-3). According to the Coolair cost breakdown figures and the factory spare parts pricing the cost of such a reduced list of parts and equipment would be $65,528.16.

PART #2

EQUIPMENT VALUE PART #2 will analyze the consistency bewteen the amount invoiced and the "NET SALE VALUE" for equipment and parts that were delivered to the job site. Reduction of spare parts and the associated savings will be discussed in more detail in the SERVICE AND MAINTENANCE report section.

Dunham-Bush Invoice No. EA 10063 (8-29-79) covering: cooling, equipment, controls and accessories	$ 61,328.66
Dunham-Bush Invoice EA 10063 (2-6-80) covering: equipment, controls and itemized spare parts	58,471.34
Total Invoiced	$119,800.00
Less "NET SALE VALUE" of equipment and parts F.O.B. Factory	(80,300.00)
	$ 39,500.00

Therefore, $39,500.00 was retained for packaging, freight, insurance and additional profit. This dollar amount represents a mark-up of 49% of the "NET SALE VALUE".

A mark-up of this magnitude appears to be a violation of the "Price Provisions" regulation for the use of AID funds. The regulation states, "No funds made available under this Act shall be used for the purchase in bulk of any commodities at prices higher than the market price prevailing in the United States at the time of purchase, adjusted for differences in the cost of transportation to destination, quality, and terms of payment".

The letter (Coolair to Dunham-Bush International 5-15-79) referenced in PART #1 of this section, indicates a cost breakdown for items not covered by this letter of credit. Specifically, $29,558.00 was itemized for "system accessories purchased by Sillcox and Muller". If these items were purchased for this project, they should be itemized and either deducted from the invoice amount or the relevance of these items to the original letter of credit should be established.

EQUIPMENT CAPABILITY

The contractor attempted to establish the expected equipment performance capability from two sources: the Bank's Appraisal Report and by the Project Contract.

BANK MISR, Cairo - The Egyptian bank indicated in a telephone conversation with Mr. Rolf Hong, A.I.D. I.I.S. investigator, that:

1) The bank did not know what pieces of equipment were expected for this project. The bank did acknowledge a proforma invoice, but they indicated equipment identification was the importer's responsibility.
2) The bank did not perform an appraisal report.

366

3) The bank did not secure or have records of any competitive bids.

4) The bank did not know what the expected production (how many tons or blocks of ice) should be.

PROJECT CONTRACT - No contract was available for the contractor's review.

In documentation available to the contractor, equipment was referenced only by Model number. No information was available pertaining to expected tons or blocks of ice produced per day.

Therefore, the contractor cannot establish if additional equipment is necessary to meet the expected performance criteria.

SERVICE AND MAINTENANCE

As stated in the introduction both parts and labor are necessary for equipment operation and future maintenance.

PARTS - Parts will be considered by two classifications. Major system components and maintenance or operational parts and supplies.

**System Components such as rings, shafts or compressor components are not included on this project. All parts itemized for this project are maintenance parts or supplies (see next paragraph). Considering that service labor to perform a major overhaul would come from the United States, the contractor agrees that no parts of this type need to be inventoried at the job site.

267

**Maintenance parts and supplies consist of parts that are used in the normal operation of equipment. Since there is not a universal parts numbering system Dunham-Bush must be relied upon to provide parts identification information. Parts lists with the associated identification number are included in the first four exhibits at the end of this report section. Identification of repair parts for the packaged refrigeration equipment are in Exhibit D-1. The "Unit Cooler Parts Selection List" is Exhibit D-2. Replacement parts lists for the IPCX packaged chiller and centrifugal pumps are included as Exhibit D-3 and D-4, respectively.

Two maintenance parts lists have been developed for the IPCX packaged chiller, which is the major piece of equipment on this project. The first parts list was recommended by Coolair. Itemized listing of the parts was not included in the proforma (4-26-79) but did appear on the final invoice dated 2-6-80.

The contractor was unable to identify all parts on the Coolair list. Many items appeared to have excess quantities.

A second list of recommended replacement parts was compiled by Dunham-Bush in Hartford, Connecticut. The spare parts on this list are denoted by an asterisk preceeding the part identification number in Exhibit D-3. The quantities on the Hartford list and the associated savings, estimated to be in excess of $18,000.00 are recommended by the contractor. The following parts price lists were used to estimate potential savings:

D & B Reciprocating Compressor Consolidated Parts Price List (March 1981)	Exhibit D-5
D & B PCX/DBX Consolidated Parts Price List (March 1981)	Exhibit D-6
D & B PCX/DBX Hermetic Oil Pump Replacement Parts Price List (March 1981)	Exhibit D-7
D & B A5, A7, PM7 and A9 Centrifugal Pump Repair Parts Price List	Exhibit D-8

However, if the importer feels that down time is critical enough to justify the expense (in excess of $18,000.00) of parts listed on the invoice, the contractor would recommend consideration of purchase of a complete second chiller for stand-by use.

LABOR - Labor may also be considered by the same two classificatons as parts, major system component labor and maintenance labor.

**Service work for major overhauls or replacement of major system components was not found to be available locally. According to the regional sales office for Dunham-Bush, in Athens, start-up and major systems repair labor would be supplied from the United States.

**Maintenance or operational labor must be supplied locally. The operating engineer will keep operating data and check equipment on a regular basis. Maintenance labor such as controls repair or replacement will be more difficult since the importer has expressed a reluctance to enter into any further contracts with the local Dunham-Bush agent. The contractor would recommend that maintenance labor be performed by an agency or individual familiar with Dunham-Bush equipment, such as Mr. Salah Botros used by Badi El Hanafy in Aiat.

364

The initial step toward proper operation and maintenance is obtaining and following the manufacturer's O & M manuals. The following appropriate operating and maintenance manuals are included:

Dunham-Bush 'ACE' ECON-O-TROL 'CE' Refrigeration Systems Installation, Operating and Maintenance Instructions	Exhibit D-9
Dunham-Bush Unit Coolers ECLS SERIES 'C' Installation Instructions	Exhibit D-10
Dunham-Bush 'IPCX' Packaged Chillers Operation and Maintenance Instructions	Exhibit D-11
Dunham-Bush Centrifugal Pumps Type A9 Operation and Maintenance Instructions	Exhibit D-12

7,10

SER/COM #4A (Kishk)
DUNHAM-BUSH LITERATURE
EXHIBIT INDEX

EQUIPMENT	REPLACEMENT PARTS LIST	PARTS PRICES	OPERATIONAL & MAINTENANCE MANUALS	RECOMMENDED SPARE PARTS LIST		
CE50 C-1-ECLS210-1-Q Air Cooled Condenser	D-1	D-5	D-9			
Model ECLS-210 Evaporator Coolers	D-2		D-10			
Model IPCX230-05Q Pkg. Chiller	D-3	D-6 D-7	D-11	D-3		
Model A9 Pumps	D-4	D-8	D-12			

371

EXHIBIT C-1

DUNHAM-BUSH

REPAIR PARTS

SMALL COWL, COWL & ACE SYSTEMS PACKAGED REFRIGERATION

TERMS OF SHIPMENT: F.O.B. SHIPPING POINT

ALL PRICES SUBJECT TO CHANGE WITHOUT NOTICE

PARTS WILL BE INVOICED AT PRICES IN EFFECT AT THE TIME OF SHIPMENT

ORDERING INSTRUCTIONS

1. Complete part number and its description is required when ordering.
2. When a part number is not known or shown in the parts catalog, complete model and serial number of the unit on which the part is to be used should be given.
3. Send all orders to: Dunham-Bush, Inc., Parts Department Harrisonburg, Virginia
   Unless Otherwise Designated
4. All prices are for one each part or kit as applicable.
5. Federal, state, local or other taxes are not included in the prices.
6. All prices are subject to change without notice and parts will be invoiced at prices in effect at the time of shipment.
7. We reserve the right to ship substitute parts or alternate parts when interchangeable with the part ordered. The invoice will cover the price of the actual part shipped.
8. All orders requiring SPECIAL HANDLING for delivery to either the local bus station or the airport, will have a $25 additional charge invoiced or actual cost whichever is higher.
9. Minimum billing is $25.00 Net.
10. Refer to latest revision of Form 1278 for terms of sale.
11. Refer to latest revision of Form 6692 for pricing.

37

ENCLOSURE PARTS - ALL MODELS		MODEL NUMBER							
PART #	DESCRIPTION	SC005	SC008 SC009	SC010 SC011	SC015 SC020	SC030 SC032 SC050 SC052	CO10SC CO10SCF CO10SLF SC075 SC100 SC104 SC154	CO17SC CO15SC CO15TLF CO15SCF CO15SLF CO20SCF CO20SC CO20SLF CO20TLF	CO25SCF SC25SLF CO25TLF CO30SC CO30SCF CO30SLF CO25SC
BAS115	Base, Unit	1	1	1	1				
BAS117	Base, Unit					1			
BAS119	Base, Unit						1		
BAS196AT10	Base, Unit							3	4
BAS200	Base, Cond.							3	4
SUP517T1	Support, Enclosure	1	1	1	1				
SUP517T2	Support, Enclosure					1			
SUP517T3	Support, Enclosure						1		
SUP518WT1	Support, Enclosure							1	
SUP518WT2	Support, Enclosure								1
SUP516WT1	Support, Panel							1	2
LEG77	Leg	2	2	2	2	2	2		
BAF128	Baffle	1	1	1	1				
BAF126	Baffle					1			
BAF282	Baffle						1		
PAD37	Pad, Unisorb							8	12
CMT2	Pad, Cement Unisorb							1/4 oz.	1/4 oz.
PNL582T1	Panel, L.H. Side			1	1				
PNL582T2	Panel, R.H. Side	1	1	1	1				
PNL582T3	Panel, L.H. Side					1			
PNL582T4	Panel, R.H. Side					1			
PNL582T5	Panel, L.H. Side						1		
PNL582T6	Panel, R.H. Side						1		
PNL582T7	Panel L.H. Side	1	1						
PNL587WT1	Panel, L. - Hand							1	1
PNL587WT2	Panel, R - Hand							1	1
PNL589T1	Panel, Front								
PNL589T2	Panel, Front	1	1	1	1	1			
PNL589T3	Panel, Front						1		
PNL589T4	Panel, Front							2	2
PNL592T1	Panel, Top	1	1	1	1				
PNL592T2	Panel, Top					1			
PNL592T3	Panel, Top						1		
PNL584T1	Panel, Top Left							1	1
PNL588T1	Panel, Top Center								1
PNL591T1	Panel, Top Right							1	1
PNL593T1	Panel, Blank Off							1	2
PNL593T3	Panel, Blank Off		2						
PNL594T3	Panel, Blank Off		1						
PNL594T4	Panel, Blank Off								
PNL594T1	Panel, Bottom							2	3
A393632001	Panel, Blank Off	1							
PNL585WT3	Panel, Front Louver							2	2
PNL600	Panel, Valve Access						1	1	1
E620589	Screw, Access	6	6	6	6	6	6		
H606002	Retainer	6	6	6	6	6	6		
H543002	Clip	6	6	6	6	6	6		
PLT943	Plate, Rating	1	1	1	1	1	1		
HI-14-210	#10 x 5/8 Tek Screw	40	40	40	40	40	40		
354052029	Gasket 4"	6	6	6	6	6	6		
A444013001	Gasket	20'	20'	20'	20'	20'	20'		
H302020	1/4-20 x 1 1/4 Screw	2	2	2	2	2	2		
ENC65A001	3/8 x .032 x 3/4 Spacer	2	2	2	2	2	2		
H520 005	1/4-20 Lock Nut	2	2	2	2	2	2		
B471006002	D/B Nameplate (8")	1	1	1	1	1	1		
0737P08	1/4-20 x 1 1/4 Screw							4	6
STU18	Stud, Wing Head							12	18
RTR40	Retainer, Stud							12	18
RCP2	Receptacle, Clip-On							12	18
SCR43	Screw, Self-Tap							62	85
016P19	5/8-11 x 2 Screw							6	8
0348P00	Nut							6	8
016P01	Washer, Lock							6	8
012P17	3/8-16 x 1 3/4 Screw							8	12
012P03	Washer							8	12
012P01	Washer, Lock							8	12
012P00	Nut							8	12
028P09	Screw, Round Head							4	6
010P00	Nut, 1/4							12	15
010P01	Washer, Lock 1/4							12	15
COP006 .035 x 012	Spacer							4	6
010P23C	1/4-20 x 2 1/2 Screw							4	6
GKT358	Gasket							25'	25'
STR28	Strip							2	2
010P13	1/4-20 x 1 1/4 Screw							2	2

STANDARD PARTS SMALL COWL				COMP. SPRING MTG. STUD		CONDENSER			RECEIVER			FAN MOTORS				FAN		FAN MOTOR MTG.	SHROUD			DUAL PRESS. CNT.	BRACKET, CONTROL	VALVE, R-OUT	GASKET, R-OUT VALVE	HEAD PRESS. CONT. VAL.
				PUMP END	MOTOR END							115-1-60	208-1-60	230-1-60	460-1-60											
Nominal HP	Refrigerant	Unit Model # SCO	Compressor #	GB94	GB119	GC238	GC167	GC104	GB115	GB116	GB90	MTR801	MTR804	MTR803	MTR805	GB163	GC162	BRK264	GC241	GC170	GC105	CNT22	650B395	VAL435	GA467	VAL591T1
½	R-12	05CL	5CL	2	1	1			1			1	1	1	1	1		1	1			1	1	1	1	1
¾	R-12	08CL	8CL	2	1		1			1		1	1	1	1		1	1		1		1	1	1	1	1
¾	R-12	09CL	9CL	2	1		1			1		1	1	1	1		1	1		1		1	1	1	1	1
1	R-12	10CL	10CL	2	1			1			1	1	1	1	1	1		1			1	1	1	1	1	1
1	R-12	11L	11L	2	1			1			1	1	1	1	1	1		1			1	1	1	1	1	1

STANDARD PARTS SMALL COWL				COMP. MTG. SPACER	CONDENSER		RECEIVER	FAN MOTORS		FAN	FAN MOTOR MOUNTING	SHROUD	DUAL PRESS. CNT.	BRACKET	VAL R-OUT	GASKET, R-OUT VALVE	FUSIBLE PLUG	LIQUID INJECTION KIT		HEAD PRESSURE CONTROL VALVE	
								FOR 208-230-1-60	FOR 230-460-3-60												
Nominal HP	Refrigerant	Unit Model # SCO -	Compressor #	GA500	CDS332	CDS333	REC77	MTR1081	MTR1083	GC1085	MTG45	SHR14	CNT22	650B 395	VAL435	GA467	PLU135	KIT195-2	KIT195-3	VAL591T1	
1½	R-12	15H	15H/CF/LF	4	1		1	1	1	1	1	1	1	1	1	1	1			1	
1½	R-12	15C	15C/ELF	4	1		1	1	1	1	1	1	1	1	1	1	1			1	
1½	R-12	15L	15L	4	1		1	1	1	1	1	1	1	1	1	1	1			1	
1½	R-22	15CF	15H/CF/LF	4	1		1	1	1	1	1	1	1	1	1	1	1			1	1
1½	R-22	15LF	15H/CF/LF	4	1		1	1	1	1	1	1	1	1	1	1	1	1			1
1½	R-502	15LF	15H/CF/LF	4	1		1	1	1	1	1	1	1	1	1	1	1				1
1½	R-502	15ELF	15C/ELF	4	1		1	1	1	1	1	1	1	1	1	1	1				1
2	R-12	20H	20H/CF/LF	4		1	1	1	1	1	1	1	1	1	1	1	1			1	
2	R-12	20C	20C/ELF	4		1	1	1	1	1	1	1	1	1	1	1	1			1	
2	R-12	20L	20L	4		1	1	1	1	1	1	1	1	1	1	1	1			1	
2	R-22	20HF	20HF	4		1	1	1	1	1	1	1	1	1	1	1	1				1
2	R-22	20CF	20H/CF/LF	4		1	1	1	1	1	1	1	1	1	1	1	1				1
2	R-22	20LF	20H/CF/LF	4		1	1	1	1	1	1	1	1	1	1	1	1		1		1
2	R-22	20ELF	20C/ELF	4		1	1	1	1	1	1	1	1	1	1	1	1				1
2	R-502	20LF	20H/CF/LF	4		1	1	1	1	1	1	1	1	1	1	1	1				1
2	R-502	20ELF	20C/ELF	4		1	1	1	1	1	1	1	1	1	1	1	1				1

STANDARD PARTS SMALL COWL				COMPRESSOR	MOUNTING SPACER	CONDENSER		RECEIVER		FAN MOTORS FOR 208-230-1-60	FAN MOTORS FOR 440-1-60	FAN	FAN MOTOR MOUNTING	SHROUD	DUAL PRESS. CONT.	BRACKET CONTROL	VALVE R-OUT		GASKET, R-OUT VALVE	FUSIBLE PLUG	LIQUID	INJECTION	KIT	HEAD PRESSURE CONTROL VALVE			
Nominal HP	Refrigerant	Unit Model # SCO	Compressor #	GA500	GA1774	CDS334	CDS335	REC67	REC68	MTR1084	MTR1085	FAN5	MTG46	SHR15	CNT22	6508 395	VAL332	VAL331	GA467	PLU135	KIT1954	KIT1956	KIT1957	VAL591T1	E219 014	VAL592T1	354 498002
3	R-12	30H	30H/LF	4		1		1		1	1	1	1	1	1	1	1		1	1				1			
3	R-12	32C	32C/ELF	4		1		1		1	1	1	1	1	1	1	1		1	1				1			
3	R-12	30C	30C/ELF		4	1		1		1	1	1	1	1	1	1	1		1	1				1			
3	R-12	30L	30L		4	1		1		1	1	1	1	1	1	1	1		1	1				1			
3	R-22	30HF	30HF	4		1		1		1	1	1	1	1	1	1	1		1	1						1	
3	R-22	30CF	30CF	4		1		1		1	1	1	1	1	1	1	1		1	1						1	
3	R-22	30LF	30H/LF	4		1		1		1	1	1	1	1	1	1	1		1	1	1					1	
3	R-22	32ELF	32C/ELF	4		1		1		1	1	1	1	1	1	1	1		1	1		1				1	
3	R-22	30ELF	30C/ELF		4	1		1		1	1	1	1	1	1	1	1		1	1		1				1	
3	R-502	30LF	30H/LF	4		1		1		1	1	1	1	1	1	1	1		1	1						1	
3	R-502	32ELF	32C/ELF	4		1		1		1	1	1	1	1	1	1	1		1	1						1	
3	R-502	30ELF	30C/ELF		4	1		1		1	1	1	1	1	1	1	1		1	1						1	
5	R-12	50H	50H/LF		4		1		1	1	1	1	1	1	1	1		1	1	1					1		
5	R-12	50C	50C/ELF		4		1		1	1	1	1	1	1	1	1		1	1	1					1		
5	R-12	50L	51L		4		1		1	1	1	1	1	1	1	1		1	1	1					1		
5	R-22	52HF	52HF		4		1		1	1	1	1	1	1	1	1		1	1	1							1
5	R-22	50CF	50CF		4		1		1	1	1	1	1	1	1	1		1	1	1							1
5	R-22	50LF	50H/LF		4		1		1	1	1	1	1	1	1	1		1	1	1			1				
5	R-22	50ELF	50C/ELF		4		1		1	1	1	1	1	1	1	1		1	1	1			1				
5	R-502	50LF	50H/LF		4		1		1	1	1	1	1	1	1	1		1	1	1							1
5	R-502	50ELF	50C/ELF		4		1		1	1	1	1	1	1	1	1		1	1	1							1

STANDARD PARTS SMALL COWL				COMP. MOUNTING SPACER	CONDENSER		RECEIVER	FAN MOTORS FOR 208-230-1-60	FAN MOTORS FOR 460-1-50	FAN MOTORS FOR 200-230-1-60	FAN MOTORS FOR 460-1-60	FANS		FAN MOTOR MOUNTING	SHROUD	DUAL PRESSURE CONTROL	OIL FAILURE CONTROL	BRACKET CONTROL	VALVE R-OUT	GASKET, R-OUT VALVE	FUSIBLE PLUG	LIQUID	INJECTION	KIT	HEAD PRESSURE CONTROL VALVE			
Nominal HP	Refrigerant	Unit Model # SCO	Compressor #	GA1774	CDS336	CDS337	REC68	MTR1084	MTR1085	MTR1086	MTR1087	FAN45	FAN49	MTG47	SHR16	CNT22	CNT106	6508 395	VAL331	GA467	PLU135	KIT1957T9	KIT1957T10	KIT1957T12	E219 014	VAL676T2	354 498000	A3795 01073
7½	R-12	75H	76PH/C/LF	4	1		1	1	1			1		1	1	1		1	1	1	1				1			
7½	R-12	75PL	76PL	4	1		1	1	1			1		1	1	1	1	2	1	1	1				1			
7½	R-12	75PC	77PC/ELF	4	1		1	1	1			1		1	1	1	1	2	1	1	1				1			
7½	R-22	75HF	75HF	4	1		1	1	1			1		1	1	1		1	1	1	1						1	
7½	R-22	75CF	75CF	4	1		1	1	1			1		1	1	1		1	1	1	1						1	
7½	R-22	75PLF	76PH/C/LF	4	1		1	1	1			1		1	1	1		1	1	1	1	1					1	
7½	R-22	75PELF	77PC/ELF	4	1		1	1	1			1		1	1	1	1	2	1	1	1	1					1	
7½	R-502	75PLF	76PH/C/LF	4	1		1	1	1			1		1	1	[illegible]		1	1	1	1						1	
7½	R-502	75PELF	77PC/ELF	4	1		1	1	1			1		1	1	1	1	2	1	1	1						1	
10	R-12	100PH	101PH/C/ELF	4		1	2			1	1		1	1	1	1	1	2	1	1	1				1			
10	R-12	100PC	101PH/C/ELF	4	1		1			1	1		1	1	1	1	1	2	1	1	1				1			
10	R-12	104PL	104PL	4	1		1			1	1		1	1	1	1	1	2	1	1	1						1	
10	R-22	100PHF	100PHF	4		1	2			1	1		1	1	1	1	1	2	1	1	1						1	
10	R-22	100PCF	111PHF/CF	4	1		1			1	1		1	1	1	1	1	2	1	1	1						1	
10	R-22	100PELF	101PH/C/ELF	4	1		1			1	1		1	1	1	1	1	2	1	1	1		1				1	
10	R-502	100PELF	101PH/C/ELF	4	1		1			1	1		1	1	1	1	1	2	1	1	1						1	
15	R-12	154PC	154PH/C/ELF	4		1	2	1	1			1		1	1	1	1	2	1	1	1					1		
15	R-22	154PELF	154PH/C/ELF	4		1	2	1	1			1		1	1	1	1	2	1	1	1			1				1
15	R-502	154PELF	154PH/C/ELF	4		1	2	1	1			1		1	1	1	1	2	1	1	1							1

OPTIONAL PARTS SMALL COWL				CRANKCASE HEATER													
				120V	240V												
Nominal HP	Refrigerant	Unit Model # SCO	Compressor #	E218 073	E218 072	REC77	VAL458	VAL629	CDS333	BAS117	LLA1	0608P65	ACC12	0802G03	0802G04	0802G02
½	R-12	05CL	5CL	1	1	1	1	1	1	1	1	1	1	1		1
¾	R-12	08CL	8CL	1	1	1	1	1	1	1	1	1	1		1	1
¾	R-12	09CL	9CL	1	1	1	1	1	1	1	1	1	1		1	1
1	R-12	10CL	10CL	1	1	1	1	1	1	1	1	1	1		1	1
1	R-12	11L	11CL	1	1	1	1	1	1	1	1	1	1		1	1

OPTIONAL PARTS SMALL COWL				CRANKCASE HEATER		COMPRESSOR SPRING MOUNTS				RECEIVER HTR.																							
				120V	240V	PUMP END	MOTOR END	RELIEF VALVE	HEATED RECEIVER	120V	230V	RECEIVER HEATER THTST.	CHECK VALVE HEATED RCVR.	OVERSIZE RECEIVER	HEATED RECEIVER W/INSL.	RECEIVER INLET VALVE	RELIEF VALVE 1/8 NPT*	OIL SEPARATOR	OVERSIZE CONDENSER	OVERSIZE CONDENSER	OVERSIZE BASE	LIQ. LINE DRIER & SIGHT GLASS	RELEIF VALVE 3/8 NPT	SUCTION ACCUMULATOR		SUCT. LINE VIB. ELIM.	DISCH. LINE VIB. ELIM.	SUCTION ACCUM. KIT	COMPRESSOR BODY COOLING FAN ASSEMBLY			LIQ. INJ. KIT	
Nominal HP	Refrigerant	Unit Model # SCO	Compressor #	E218 073	E218 072	KIT393T3	KIT393T4	VAL685T2	REC83	HTR94T6	HTR94T5	CNT229	VAL387	REC67	REC83	GA1953	VAL685T2	SEP24	CDS333	CDS334	BAS117	LLA1	0608P65	ACC12	ACC4	0802G07	0802G04	OPT15	FAN11A	FAN10A	FAN12A	KIT195T2	KIT195T3
1½	R-12	15H	15H/CF/LF	1	1	2	2	1	1	1	1	1	1	1		1	1	1	1		1	1	1	1		1	1	1	1	1	1		
1½	R-12	15C	15C/ELF	1	1	2	2	1	1	1	1	1	1	1		1	1	1	1		1	1	1	1		1	1	1	1	1	1		
1½	R-12	15L	15L	1	1	2	2	1	1	1	1	1	1	1		1	1	1	1		1	1	1	1		1	1	1	1	1	1		
1½	R-22	15CF	15H/CF/LF	1	1	2	2	1	1	1	1	1	1	1	1	1	1	1	1		1	1	1	1		1	1	1	1	1	1	1	
1½	R-22	15LF	15H/CF/LF	1	1	2	2	1	1	1	1	1	1	1	1	1	1	1	1		1	1	1	1		1	1	1	1	1	1	1	
1½	R-502	15LF	15H/CF/LF	1	1	2	2	1	1	1	1	1	1	1	1	1	1	1	1		1	1	1	1		1	1	1	1	1	1	1	
1½	R-502	15ELF	15C/ELF	1	1	2	2	1	1	1	1	1	1	1	1	1	1	1	1		1	1	1	1		1	1	1	1	1	1	1	
2	R-15	20H	20H/CF/LF	1	1	2	2	1	1	1	1	1	1	1	1	1	1	1		1	1	1	1		1	1	1	1	1	1	1		
2	R-12	20C	20C/ELF	1	1	2	2	1	1	1	1	1	1	1	1	1	1	1		1	1	1	1		1	1	1	1	1	1	1		
2	R-12	20L	20L	1	1	2	2	1	1	1	1	1	1	1	1	1	1	1		1	1	1	1		1	1	1	1	1	1	1		
2	R-22	20HF	20HF	1	1	2	2	1	1	1	1	1	1	1	1	1	1	1		1	1	1	1	1		1	1	1	1	1	1		1
2	R-22	20CF	20H/CF/LF	1	1	2	2	1	1	1	1	1	1	1	1	1	1	1		1	1	1	1	1		1	1	1	1	1	1		1
2	R-22	20LF	20H/CF/LF	1	1	2	2	1	1	1	1	1	1	1	1	1	1	1		1	1	1	1	1		1	1	1	1	1	1		1
2	R-22	20ELF	20C/ELF	1	1	2	2	1	1	1	1	1	1	1	1	1	1	1		1	1	1	1	1		1	1	1	1	1	1		1
2	R-502	20LF	20H/CF/LF	1	1	2	2	1	1	1	1	1	1	1	1	1	1	1		1	1	1	1	1		1	1	1	1	1	1		1
2	R-502	20ELF	20C/ELF	1	1	2	2	1	1	1	1	1	1	1	1	1	1	1		1	1	1	1	1		1	1	1	1	1	1		1

* In place of fusible plug

376

OPTIONAL PARTS SMALL COWL				CRANKCASE HTR.		COMPRESSOR SPRING MOUNT				RELEIF VALVE	HEATED RECEIVER		RECEIVER HTR.		RECEIVER HEATER THTST.	CHECK VALVE HTD. RCV'R.	OVERSIZE RECEIVER	HEATED RECEIVER w/INSULATION		RECEIVER INLET VALVE	RELIEF VALVE 1/8 NPT*	OIL SEPARATOR		OVERSIZE CONDENSER		OVERSIZE BASE	LIQUID LINE DRIER & MOISTURE IND.		SUCTION ACCUM.		SUCTION ACCUM. RETURN KIT	SUCTION LINE VIBRATION ELIM.		DISCH. LINE VIBRATION ELIM.		COMP. BODY COOLING FAN ASSEMBLY		
				120V	240V	PUMP END	MOTOR END	PUMP END	MOTOR END				120V	230V																							208-1-60	230-1-60	440-1-60
Nominal HP	Refrigerant	Unit Model # SCO	Compressor #	E218 073	E218 072	KIT393T5	KIT393T5	KIT393T6	KIT393T7	VAL685T2	REC81	REC82	HTR94T6	HTR94T5	CNT229	VAL389	REC68	REC81	REC82	VAL367	VAL685T2	SEP24	SEP25	CDS335	CDS336	BAS119	LLA2	LLA3	ACC4	A379 651001	OPT16	0802G03	0802G10	0802G04	0802G07	FAN11A	FAN10A	FAN12A
3	R-12	30H	30H/LF	1	1					1	1		1	1	1	1	1	1		1	1	1		1		1	1			1	1	1		1		1	1	1
3	R-12	32C	32C/ELF	1	1					1	1		1	1	1	1	1	1		1	1	1		1		1	1			1	1	1		1		1	1	1
3	R-12	30C	30C/ELF	1	1			2	2	1	1		1	1	1	1	1	1		1	1	1		1		1	1			1	1	1		1		1	1	1
3	R-12	30L	30L	1	1			2	2	1	1		1	1	1	1	1	1		1	1	1		1		1	1		1	1	1	1		1		1	1	1
3	R-22	30HF	30HF	1	1	2	2			1	1		1	1	1	1	1	1		1	1	1		1		1	1		1		1	1		1		1	1	1
3	R-22	30CF	30CF	1	1	2	2			1	1		1	1	1	1	1	1		1	1	1		1		1	1		1		1	1		1		1	1	1
3	R-22	30LF	30H/LF	1	1					1	1		1	1	1	1	1	1		1	1	1		1		1	1		1		1	1		1		1	1	1
3	R-22	32ELF	32C/ELF	1	1	2	2			1	1		1	1	1	1	1	1		1	1	1		1		1	1		1		1	1		1		1	1	1
3	R-22	30ELF	30C/ELF	1	1			2	2	1	1		1	1	1	1	1	1		1	1	1		1		1	1		1		1	1		1		1	1	1
3	R-502	30LF	30H/LF	1	1					1	1		1	1	1	1	1	1		1	1	1		1		1	1		1		1	1		1		1	1	1
3	R-502	32ELF	32C/ELF	1	1	2	2			1	1		1	1	1	1	1	1		1	1	1		1		1	1		1		1	1		1		1	1	1
3	R-502	30ELF	30C/ELF	1	1			2	2	1	1		1	1	1	1	1	1		1	1	1		1		1	1		1		1	1		1		1	1	1
5	R-12	50H	50H/LF	1	1					1		1	1	1	1	1	2		1	1	1		1		1	1		1		1	1		1		1	1	1	1
5	R-12	50C	50C/ELF	1	1					1		1	1	1	1	1	2		1	1	1		1		1	1		1		1	1		1		1	1	1	1
5	R-12	50L	51L	1	1					1		1	1	1	1	2		1	1	1		1		1	1		1		1	1		1		1	1	1	1	
5	R-22	52HF	52HF	1	1			2	2	1		1	1	1	1	1	2		1	1	1		1		1	1		1		1	1		1		1	1	1	1
5	R-22	50CF	50CF	1	1			2	2	1		1	1	1	1	1	2		1	1	1		1		1	1		1		1	1		1		1	1	1	1
5	R-22	50LF	50H/LF	1	1			2	2	1		1	1	1	1	1	2		1	1	1		1		1	1		1		1	1		1		1	1	1	1
5	R-22	50ELF	50C/ELF	1	1			2	2	1		1	1	1	1	1	2		1	1	1		1		1	1		1		1	1		1		1	1	1	1
5	R-502	50LF	50H/LF	1	1			2	2	1		1	1	1	1	1	2		1	1	1		1		1	1		1		1	1		1		1	1	1	1
5	R-502	50ELF	50C/ELF	1	1			2	2	1		1	1	1	1	1	2		1	1	1		1		1	1		1		1	1		1		1	1	1	1

* In place of fusible plug

OPTIONAL PARTS SMALL COWL				CRANKCASE HTR.		COMPRESSOR SPRING MOUNTS							RECEIVER HTR.																																			
				120V	240V	PUMP END	MOTOR END	PUMP END	MOTOR END	MOTOR END	RELIEF VALVE	HEATED RECEIVER	120V	230V	RECEIVER HTR. THTS'T.	CHECK VALVE-HTD. REC.	OVERSIZE RECEIVER	HTD. REC W/INSULATION	REC. INLET VALVE	RELIEF VALVE 1/8 NPT*	OIL SEPARATOR				OVERSIZE COND.	LIQ. LINE DRIER & MOISTURE INDICATING SIGHT GLASS		RELIEF VALVE 3/8 NPT	SUCTION ACCUM.		HTD. SUCTION ACCUM.	SUCTION ACCUM. RETURN KIT	SUCTION LINE VIBRATION ELIM.		DISCHARGE LINE VIBRATION ELIM.		COMPRESSOR BODY COOLING FAN ASSEMBLY		
Nominal HP	Refrigerant	Unit Model # SCO	Compressor #	E218 073	E218 072	KIT393T6	KIT393T7	KIT393T7	KIT393T8	KIT393T9	VAL685T2	REC82	HTR94T6	HTR94T5	CNT229	VAL389	REC68	REC82	VAL367	VAL685T2	SEP25	SEP26	SEP27	SEP48	CDS337	LLA3	LLA4	0608P65	ACC3	ACC5T1	ACC5T2	OPT15	0802G12	0802G10	0802G08	0802G07	208-1-60 FAN11A	230-1-60 FAN10A	440-1-60 FAN12A
7½	R-12	75H	76PH/C/LF	1	1			2	2		1	1	1	1	1	1	2	1	1	1			1		1	1		1		1	1	1	1		1		1	1	1
7½	R-12	75PL	76PL	1	1			2	2		1	1	1	1	1	1	2	1	1	1		1			1	1		1		1	1	1	1		1		1	1	1
7½	R-12	75PC	77PC/ELF	1	1			2	2		1	1	1	1	1	1	2	1	1	1		1			1	1		1		1	1	1	1		1		1	1	1
7½	R-22	75HF	75HF	1	1	2	2				1	1	1	1	1	1	2	1	1	1	1				1	1		1	1			1	1	1		1	1	1	1
7½	R-22	75CF	75CF	1	1	2	2				1	1	1	1	1	1	2	1	1	1	1				1	1		1	1			1		1		1	1	1	1
7½	R-22	75PLF	76PH/C/LF	1	1			2	2		1	1	1	1	1	1	2	1	1	1		1			1	1		1	1			1	1		1		1	1	1
7½	R-22	75PELF	77PC/ELF	1	1			2	2		1	1	1	1	1	1	2	1	1	1		1			1	1		1	1			1	1		1		1	1	1
7½	R-502	75PLF	76PH/C/LF	1	1			2	2		1	1	1	1	1	1	2	1	1	1		1			1	1		1	1			1	1		1		1	1	1
7½	R-502	75PELF	77PC/ELF	1	1			2	2		1	1	1	1	1	1	2	1	1	1		1			1	1		1	1			1	1		1		1	1	1
10	R-12	100PH	101PH/C/ELF	1	1			2		2	1	1	1	1	1	1		2	1	1				1			1	1		1	1	1	1		1		1	1	1
10	R-12	100PC	101PH/C/ELF	1	1			2		2	1	1	1	1	1	1	2	1	1	1				1	1	1		1	1	1	1	1	1		1		1	1	1
10	R-12	104PL	104PL	1	1			2		2	1	1	1	1	1	1	2	1	1	1				1	1	1		1	1	1	1	1	1		1		1	1	1
10	R-22	100PHF	100PHF	1	1	2	2				1	1	1	1	1	1		2	1	1		1				1	1		1	1	1		1		1		1	1	1
10	R-22	100PCF	111PHF/CF	1	1			2		2	1	1	1	1	1	1	2	1	1	1		1			1		1	1		1	1	1	1		1		1	1	1
10	R-22	100PELF	101PH/C/ELF	1	1			2		2	1	1	1	1	1	1	2	1	1	1		1			1		1	1		1	1	1	1		1		1	1	1
10	R-502	100PELF	101PH/C/ELF	1	1			2		2	1	1	1	1	1	1	2	1	1	1		1			1		1	1		1	1	1	1		1		1	1	1
15	R-12	154PC	154PH/C/ELF	1	1			2		2	1	1	1	1	1	1		2	1	1				1			1	1		1	1	1	1		1		1	1	1
15	R-12	154PELF	154PH/C/ELF	1	1			2		2	1	1	1	1	1	1		2	1	1				1			1	1		1	1	1	1		1		1	1	1
15	R-502	154PELF	154PH/C/ELF	1	1			2		2	1	1	1	1	1	1		2	1	1				1			1	1		1	1	1	1		1		1	1	1

* In place of fusible plug.

378

SINGLE COMPRESSOR
SINGLE CONDENSER FAN
STANDARD PARTS
COWL

Nominal HP	Refrigerant	Unit Model # CO-	Compressor #	CONDENSER CDS337	FAN FAN45	PAD, UNISORB GA1590	MOUNTING 26 IN. MTG47	RECEIVER REC82	SHROUD SHR16	STRIP STR26	VALVE VAL331	VALVE VAL426	VALVE VAL401	VALVE, PRES. REG. VAL676T1	VALVE, PRES. REG. VAL592T4	TEE 2-1/8 x 2-1/8 0362P23	ELBOW 90 2-1/8x2 0450P02	ELBOW 90 LONG RAD 0450P54	ELBOW 90 1-1/8 LR 0450P55	ELBOW 90x1-3/8 0450P00	ELBOW 5/8x90 0450P52	TEE, FLARE 0362P25	CAP 7/8 MUELLER 0644P06	CAP 1-1/8 MUELLER 0644P07	CAP 2-1/8 TUBE 0644P10	CAP TUBE 0644P04	CAP COPPER 0644P08	BUSHING, BRASS REDUCING 073P01B	VALVE 25P135	N TERM. BOX ASSY. BOX2521	BOX ASSY. BOX3014	ELECTRIC BOX3020	CONTROL BOX2992	DIAGRAM, WIRING DGM1478	ENG. CHG. EC5000043	CRANKCASE HEATER GA1521	CRANKCASE HEATER HTR94T5	I & O MANUAL ISR30	INSTALLATION, CHRG. VAL. IST4	LAYOUT, PANEL LYO1397	MOTOR MTR1086	PIPING SCHEMATIC SCH21
10	R-12	10SC	Herm. 6 Cyl. - 2500 CFH 230/3/60 100PHC	1	1	2	1	1	1	1	1	1	1	1		1	1	1	1				1	1	1			1	2	1	1		1	1	1	1	1	1	1	1	1	1
10	R-22	10SCF	Com. Herm. 4 Cyl. - 1356 CFH 230/3/60 100PHF	1	1	2	1	1	1	1	1	1	1		1	1			1	1	1	1		1		1	1	1	2	1		1		1	1	1	1	1	1	1	1	1
10	R-502	10SLF	Com. Herm. 6 Cyl. - 2500 CFH 230/3/60 100PELF	1	1	2	1	1	1	1	1	1	1		1	1			1	1	1	1		1		1	1	1	2	1			1	1	1	1	1	1	1	1	1	1

SINGLE COMPRESSOR
TWO CONDENSER FANS
STANDARD PARTS
COWL

Nominal HP	Refrigerant	Unit Model # CO-	Compressor #	CAP 2-1/8 TUBE 0644P10	CAP 7/8 MEULLER 0644P06	CAP COPPER 0644P08	CAP 1-1/8 MUELLER 0644P07	CAP 2-5/8 0644P11	CAP 1-5/8 0644P09	REDUCING BUSHING BRASS 073P018	VALVE 25P135	BOARD, TERMINAL BRD24	BOX, ASSY-ELEC. CONTROL BOX3016	BOX3015	BOX2993	BOX2995	BOX2997	BOX3017	BOX2999	CONTROL MOTOR PROTECTION CNT138T2	BLOCK, CUTOUT FUSE CT08	DIAGRAM, WIRING DGM1398	ENG. CHG. 9-9-74 EC500-0043	FUSE FUS4	HEATER HTR59T1	CRANKCASE HEATER HTR94T1	IEO MANUAL ISR31	INSTALLATION CHG. VALVE IST4	LAYOUT PANEL LYO1398	MOTOR MTR1086	MOTOR MTR1084	PIPING SCHEMATIC SCH17	N TERM. BOX ASSY. BOX2521	CC HEATER GA1521	IEO MANUAL ISR30
15	R-502	15SLF	Com. - Herm. 3845 CFH 230/460-3-60 206LFN	1	2					1	2	1				1				1	1	1	1	1	1	1	1	1	1		1	1			
15	R-22	15SCF	Com. - Herm. 4 Cyl. 200 CFM 230-3-60 151PHFC		2	1				1	2				1							1	1			1		1	1		1	1	1	1	1
15	R-12	15SC	Com. - Herm 3000 CFH 230-3-60 154PHCELF	1	2					1	2			1								1	1			1		1	1		1	1	1	1	1
17	R-12	17SC	Com. - Herm. 4428 CFH 230/460-3-60 157CN	1			2			1	2	1	1							1	1	1	1	1	1	1	1	1	1	1		1			
20	R-12	20SC	Com. - Herm. 5127 CFH 230/460-3-60 208CN			1	1	1		1	2	1						1		1	1	1	1	1	1	1	1	1	1			1			
20	R-502	20SLF	Com. - Herm. 5127 CFH 230/460-3-60 308LFN	1	2					1	2	1							1	1	1	1	1	1	1	1	1	1	1			1			
20	R-22	20SCF	Com. - Herm. 6 Cyl. - 3000 CFH 230-3-60 204PHFCF		1		1		1	1	2						1					1	1			1		1	1	2		1	1	1	1

SINGLE COMPRESSOR TWO CONDENSER FANS STANDARD PARTS COWL

Nominal HP	Refrigerant	Unit Model # CD-	Compressor #	CONDENSER CDS337	CONDENSER CDS336	BUSHING BUS29	WIRE WAY 2-1/2x4 DUC3	ENG. CHG. 2-13-76 EC55000471	FAN FAN45	FAN FAN49	MOUNTING 26 IN. MTG47	RECEIVER-SUPPORT ASSY. R89521	SHROUD SHR16	STRIP STR26	VALVE VAL426	VALVE, PRES. REG 7/8 VAL677T1	VALVE, PRES. REG 7/8 VAL676T1	VALVE, ANGLE 1-1/8 VAL794	TEE 7/8x5/8x5/8 0362P19	TEE 1-3/8x1-1/8x7/8 0362P114	TEE 1-1/8 0362P22	TEE2-1/8x2-1/8 0362P23	TEE1-3/8x1-3/8 0362P36	TEE 1-5/8x1-1/8 0362P44	TEE 1-1/8x7/8 0362P28	TEE 1-3/8x1-1/8 0362P53	TEE 7/8x7/8 0362P16	TEE 1-5/8x1 3/8x1-3/8 0362P55	ELBOW 90x1-5/8 0450P05	ELBOW 5/8x 90 0450P52	ELBOW 90 LONG RAD. 0450P54	ELBOW 90x1-1/8 LR 0450P55	ELBOW 90x2-5/8 0450P22	ELBOW 90x1-3/8 0450P00	ELBOW 90x2-1/8x2 0450P02	VALVE PRESSURE 0608P65
15	R-502	15SLF	Com. - Herm. 3845 CFH 230/460-3-60 206LFN		2		1	1	2		2	1	2	2	1	1		2	1	1			1		1					1	1			1	1	1
15	R-22	15SCF	Com. - Herm. 4 Cyl. 200 CFM 230-3-60 151PHFC		2		1	1	2		2	1	2	2	1	1		2	1			1			1		1			1	1	1		1		1
15	R-12	15SC	Com. - Herm 3000 CFH 230-3-60 154PHCELF		2		1	1	2		2	1	2	2	1		1	1	1	1			1		1					1	1			1	1	1
17	R-12	17SC	Com. - Herm. 4428 CFH 230/460-3-60 157CN	2			1	1		2	2	1	2	2	1		1	2	1		1		1			1				1	1			1	1	1
20	R-12	20SC	Com. - Herm. 5127 CFH 230/460-3-60 208CN	2		1	1	1		2	2	1	2	2	1		1	2	1					1				1	1	1	1		1			1
20	R-502	20SLF	Com. - Herm. 5127 CFH 230/460-3-60 308LFN	2			1	1		2	2	1	2	2	1	1		2	1	1			1		1					1	1			1	1	1
20	R-22	20SCF	Com. - Herm. 6 Cyl. - 3000 CFH 230-3-60 204PHFCF	2			1	1		2	2	1	2	2	1	1		2	1		2	1							1	1	1	1				1

TWO COMPRESSOR TWO CONDENSER FANS STANDARD PARTS COWL

Nominal HP	Refrigerant	Unit Model # CO-	Compressor #	CONDENSER CDS336	CONDENSER CDS337	COUPLING CPL39	WIRE WAY DUC3	ENG. CHG. 9-9-74 EC500-0043	FAN FAN45	FAN FAN49	GASKET, SIGHT GLASS GA1253	RETAINER, SIGHT GLASS GB1091	LIQUID LEVEL IND. IDR7	MANIFOLD, SUCTION MFD82WT2	MANIFOLD, SUCTION MFD82WT1	MANIFOLD, SUCTION MFD82WT3	MOUNTING 26 IN. MTG47	RECEIVER/SUPPORT ASSY. R89522	RECEIVER/SUPPORT ASSY. R81392 2	SHROUD SHR16	STRIP STR26	VALVE TUB2717W	VALVE VAL426	VALVE VAL427	VALVE VAL429	VALVE VAL430	VALVE VAL677T1	VALVE VAL677T2	VALVE VAL794	ELBOW, 90 0396P20	ELBOW 90x1-3/8 0450P00	ELBOW 90x1-5/8 0450P05	ELBOW 5/8x90 0450P52	ELBOW 90x1-1/8 0450P55	ELBOW 90 LONG RAD. 0450P54	VALVE PRESSURE 0608P65
15	R-502	15TLF	Com. - Herm. 4 Cyl. - 2000 CFM 230-3-60 (2) 75PELF	2		2	1	1	2		2	2	1		1		2	1		2	2	2	1		2		1		2	2	3		1		1	1
20	R-502	20TLF	Com. - Herm. 6 Cyl. - 2500 CFM 230-3-60 (2) 100PELF		2	2	1	1		2	2	2	1	1			2	1		2	2	2	1			2	1		2	2	3		1		1	1
TWO COMPRESSOR THREE CONDENSER FANS STANDARD PARTS																																				
25	R-502	25TLF	Com. - Herm 6 Cyl. - 3000 CFH 230-3-60 (2) 154PHCELF		3	2	1	1	3		2	2	1			1	3		1	3	3	2		1		2		1	1	2	1	2	1	1		1

SINGLE COMPRESSOR THREE CONDENSER FANS STANDARD PARTS COWL				CONDENSER	WIREWAY	ENG. CHG. 8-9-74	FAN	MOUNTING 26 IN.	REC/SUPPORT ASSY.	SHROUD	STRIP	VALVE	PRESSURE VALVE		VALVE	TEE 1-3/8x1-1/8x7/8	TEE 7/8x5/8x5/8	TEE1-1/8	TEE7/8x1-1/8x5/8	TEE1-5/8	TEE1-5/8x1-3/8x1-3/8	TEE 2-1/8x2-1/8	TEE	BUSHING FLUSH 1-3/8	ELBOW 90x1-5/8	ELBOW 90x2-5/8	ELBOW 5/8x90	ELBOW 90 x1-1/8	ELBOW 90x1-3/8	ELBOW 90x2-1/8x2	VALVE, PRESSURE
Nominal HP	Refrigerant	Unit Model # CO-	Compressor #	CDS337	DUC3	EC500-0043	FAN49	MTG47	R8139Z1	SHR16	STR26	VAL427	VAL677T2	VAL676T2	VAL794	0362P114	0362P19	0362P22	0362P29	0362P43	0362P55	0362P23	0362P35	0395P04	0450P05	0450P22	0450P52	0450P55	0450P00	0450P02	0608P65
25	R-502	25SLF	Com. - Herm. 5760 CFH 230/460-3-60 409LFN	3	1	1	2	2	1	2	2	1	1		1	1	1	1	1	1	1			1	1	1	1	1			1
25	R-22	25SCF	Com. - Herm. 3321 CFH 230/460-3-60 255HFN	3	1	1	2	2	1	2	2	1	1		1	1	1	1	1			1	1				1	1	1	1	1
25	R-12	25SC	Com. - Herm. 5760 CFH 230/460-3-60 259CN	3	1	1	2	2	1	2	2	1		1	1	1	1	1	1	1	1			1	1	1	1	1			1
30	R-502	30SLF	Com. - Herm 6660 CFH 230/460-3-60 411LFN	3	1	1	3	3	1	3	3	1	1		1	1	1	1	1	1	1			1	1	1	1	1			1
30	R-22	30SCF	Com. - Herm. 3845 CFH 230/460-3-60 306HFN	3	1	1	3	3	1	3	3	1	1		1	1	1	1	1			1	1				1	1	1	1	1
30	R-12	30SC	Com. - Herm. 6660 CFH 230/460-3-60 311CN	3	1	1	3	3	1	3	3	1		1	1	1	1	1	1	1	1			1	1	1	1	1			1

TWO COMPRESSOR TWO CONDENSER FANS STANDARD PARTS COWL				VALVE	BUSHING, REDUCING	CAP 1-1/8	CAP 2-1/8	CAP 7/8	CAP 1-5/8	TEE 1-3/8x1-1/8x7/8	TEE 7/8x5/8x5/8	TEE1-1/8	TEE2-1/8x2-1/8	TEE 7/8x1-1/8x5/8	TEE1-3/8x1-1/8	TEE 1-1/8x7/8	ENG. CHG. 2-13-76	BOX ASSY.	ELECTRICAL	CONTROL	DIAGRAM, WIRING		FUSE	HEATER, CRANKCASE	HEATER, CRANKCASE	I & O MANUAL	INSTALLATION, CHG. VAL	LAYOUT, PANEL		MOTOR		SCHEMATIC, PIPING		HEATER, CC	N. TERM. BOX ASSY.
Nominal HP	Refrigerant	Unit Model # CO-	Compressor #	25P135	073P01B	0644P07	0644P10	0644P06	0644P09	0362P114	0362P15	0362P22	0362P23	0362P29	0362P53	0362P28	EC5500047-1	BOX2996	BOX3000	BOX3004	DGM1401	DGM1402	FUS4	HTR94T1	HTR94T2	ISR30	IST4	LYO1401	LYO1402	MTR1084	MTR1086	SCH19	SCH20	GA1521	BOX2521
15	R-502	15TLF	Com. - Herm. 4 Cyl. - 2000 CFM 230-3-60 (2) 75PELF	2	1			2	1	2	1	1				1	1	1			1			1		1	1	1		1		1		1	1
20	R-502	20TLF	Com. - Herm. 6 Cyl. - 2500 CFM 230-3-60 (2) 100PELF	2	1		1	2		2	1	1				1	1		1		1			1		1	1	1			1	1		1	1
TWO COMPRESSOR THREE CONDENSER FANS STANDARD PARTS																																			
25	R-502	25TLF	Com. - Herm 6 Cyl. - 3000 CFM 230-3-60 (2) 154PHCELF	2	1	2	1			1	1	2	1	1	1					1		1	2	1		1	1		1		2		1	1	1

331

SINGLE COMPRESSOR THREE CONDENSER FANS STANDARD PARTS COWL				CAP 1-1/8	CAP2-5/8	CAP2-1/8	BUSHING, REDUCING BRASS	VALVE	BOARD TERMINAL	ELECTRIC CONTROL ASSEMBLY BOX						CONTROL MOTOR PROTECT.	BLOCK, CUTOUT FUSE	DIAGRAM WIRING		ENG. CHG. 9-9-74	FUSE	HEATER	HEATER, CRANKCASE	HEATER, CRANKCASE	I & O MANUAL	INSTALLATION, C.V.	LAYOUT, PANEL		MOTOR	SCHEMATIC, PIPING
Nominal HP	Refrigerant	Unit Model # CO-	Compressor #	0644P07	0644P11	0644P10	073P01B	25P135	BRD24	BOX3019	BOX3005	BOX3007	BOX3018	BOX3001	BOX3003	CNT138T2	CT08	DGM1399	DGM1400	EC500-0043	FUS4	HTR59T1	HTR94T1	HTR94T2	ISR31	IST4	LYO1399	LYO1400	MTR1086	SCH18
25	R-502	25SLF	Com. - Herm. 5760 CFH 230/460-3-60 409LFN	2	1		1	2	1						1	1	1		1	1	2	1	2	1	1	1		1	3	1
25	R-22	25SCF	Com. - Herm. 3321 CFH 230/460-3-60 255HFN	2		1	1	2	1					1		1	1	1		1	2	1	2	1	1	1	1		3	1
25	R-12	25SC	Com. - Herm. 5760 CFH 230/460-3-60 259CN	2	1		1	2	1				1			1	1	1		2	1	2	1	1	1	1	1		3	1
30	R-502	30SLF	Com. - Herm 6660 CFH 230/460-3-60 411LFN	2	1		1	2	1			1				1	1		1	1	2	1	2	1	1	1		1	3	1
30	R-22	30SCF	Com. - Herm. 3845 CFH 230/460-3-60 306HFN	2	1		1	2	1		1					1	1	1		1	2	1	2	1	1	1	1		3	1
30	R-12	30SC	Com. - Herm. 6660 CFH 230/460-3-60 311CN	2	1		1	2	1	1						1	1	1		1	2	1	2	1	1	1	1		3	1

COWL OPTIONAL PARTS			FILTER, DRIER		CORE, FLTR. DR.	IND., MOISTURE & LIQUID		VALVE, SHUT-OFF		SWITCH, DISCONNECT 240V, 200A			SWITCH DISCONNECT 100A 480-600V			CLOCK DEF.	REC. OVERSIZE			ELIMINATOR, VIBRATION DISCHARGE				ELIMINATOR, VIBRATION LIQUID			VALVE SOLENOID LIQUID			COIL SOLENOID	FILTER SUCTION			
Nominal HP	Refrigerant	Unit Model # CO-	FLR18	FLR12	0824G00	IDR49	IDR50	VAL403	VAL402	SWT92	SWT95	SWT97	SWT93	SWT94	SWT96	TMR34T1	R12139Z1	R1295Z1	R1295Z2	0802G08	0802G10	0802G12	0802G13	0802G04	0802G07	0802G08	VAL648	VAL652	VAL653	COL119	FL94AT1	FL94AT2	FL94AT3	FL94AT4
10	R-22	10SCF										1	1			1				1				1			1			1	1			
10	R-502	10SLF							1			1	1			1				1				1			1			1	1			
10	R-12	10SC		1	1	1			1			1	1			1					1				1			1		1			1	
15	R-12	15SC		1	1	1			1	1				1		1		1				1			1			1		1			1	
15	R-22	15SCF		1	1	1			1			1	1			1		1		1					1			1		1	1			
15	R-502	15SLF		1	1	1			1			1	1			1		1			1				1			1		1			1	
15	R-502	15TLF		1	1	1			1			1	1			1		1			1				1			1		1		1		
17	R-12	17SC	1		1		1	1		1				1		1		1				1				1			1	1			1	
20	R-502	20SLF		1	1	1			1	1				1		1		1			1				1			1		1			1	
20	R-12	20SC	1		1		1	1		1				1		1		1					1			1			1	1			1	
20	R-502	20TLF		1	1	1			1	1				1		1			1		1				1			1		1			1	
20	R-22	20SCF		1	1	1			1	1				1		1		1		1					1			1		1		1		
25	R-12	25SC	1		1		1	1		1				1		1	1					1				1			1	1				1
25	R-22	25SCF	1		1		1	1		1				1		1	1				1					1			1	1			1	
25	R-502	25SLF	1		1		1	1			1				1	1	1					1				1			1	1				1
25	R-502	25TLF	1		1		1	1		1				1		1					1					1			1	1			1	
30	R-502	30SLF	1		1		1	1			1				1	1	1					1				1			1	1				1
30	R-22	30SCF	1		1		1	1		1				1		1	1				1					1			1	1			1	
30	R-12	30SC	1		1					1				1		1	1						1			1			1	1				1

COWL OPTIONAL PARTS			PANEL VT. DISC.	VIB. ISOLATOR MOUNTS		SEPARATOR, OIL				VALVE, CHECK			ACCUMULATORS NON-HEATED			ACCUMULATORS HEATED			HEATER		HEATED T'STAT	CHG. VALVE	ELIMINATOR VIB. (SUCTION)				LIQ. LINE ASSY.	VLAVE, RELIEF	VALVE, SHUT-OFF	REC. OVERSIZE
Nominal HP	Refrigerant	Unit Model # CO-	CAN3T3	ISO104T1	ISO105T1	SEP26	SEP27	SEP28	SEP48	VAL427	VAL428	VAL429	ACC5T1	ACC6T1	ACC7T1	ACC5T2	ACC6T2	ADC7T2	HTR94T1	HTR94T2	CNT229	25P135	0802G10	0802G12	0802G13	0802G14	LLA3	0608P65	VAL794	R1213922
10	R-22	10SCF	1	1		1				1			1			1			1		1	1	1				1	1		
10	R-502	10SLF	1	1		1				1			1			1			1		1	1	1				1	1		
10	R-12	10SC	1	1			1			1				1			1		1		1	1			1			1		
15	R-12	15SC	1	1					1		1			1			1			1	1	1			1					
15	R-22	15SCF	1	1		1				1			1			1				1	1	1	1							
15	R-502	15SLF	1	1			1				1		1				1			1	1	1			1					
15	R-502	15TLF	1		1		1			1				1			1			1	1	1		1						
17	R-12	17SC	1	1					1		1			1			1			1	1	1			1					
20	R-502	20SLF	1		1		1				1			1			1			1	1	1			1					
20	R-12	20SC	1		1			1				1		1			1			1	1	1			1					
20	R-502	20TLF	1		1		1			1				1			1			1	1	1			1					
20	R-22	20SCF	1		1	1				1				1			1			1	1	1		1						
25	R-12	25SC	1		1			1				1			1			1		1	1	1				1				
25	R-22	25SCF	1		1		1				1			1			1			1	1	1			1					
25	R-502	25SLF	1		1				1			1			1			1		1	1	1				1				
25	R-502	25TLF	1		1		1			1					1			1		1	1	1			1					1
30	R-502	30SLF	1		1				1			1			1			1		1	1	1				1				
30	R-22	30SCF	1		1		.1				1				1			1		1	1	1			1					
30	R-12	30SC	1		1			1				1			1			1		1	1	1				1			1	

Exhibit C-2

DUNHAM-BUSH

FORM NO. 5220
NEW
EFFECTIVE
JULY 1980
SUPERSEDES 5620M

UNIT COOLER
PARTS SELECTION LIST

INSTRUCTIONS FOR ORDERING

Due to redesign changes on the unit cooler line, of which the model designation has not been changed, it is not possible to compile a parts listing of all part changes. Therefore, for that reason it is always necessary that serial numbers be furnished for correct parts selection.

This revised form has important footnotes. It is of the utmost importance when ordering to read all footnotes under the parts column of the part being selected.

WHEN ORDERING - SPECIFY COMPLETE PART NUMBER AND PART DESCRIPTION. This expedites your order, and assures the shipment of the correct part.

Specify on your order, method of shipment, i.e., parcel post, express, truck, etc. If not specified, shipment will be made best way as determined by our Shipping Department.

All 50 Hertz valves, controls, etc. have been removed from the price list. However, they can still be ordered thru the factory, but only on a quotation basis. This quotation can be obtained simply by furnishing the factory with a description, model number and voltage of the item to be ordered. These parts shall be subject to the same terms applicable to other replacement parts.

All shipments are F.O.B. Harrisonburg, Va., collect. Prepaid and add charges should be specified on your order. Clearly indicate on order, complete shipping information.

TERMS of shipment will be governed by Credit Department of Dunham-Bush, Inc. When sight draft shipment is involved, specify bank against which draft is to be drawn, and sent.

Specify correct parts required. We are not responsible for errors in ordering. Parts ordered in error must have our approval before returning. Any parts so returned are returned at customer's expense.

CLAIMS for in-transit damage are not the responsibility of Dunham-Bush. Such claims are to be sole responsibility of the consignee and should be filed against the carrier by consignee.

1. **Send all orders to:** **Dunham-Bush, Inc., Parts Department Harrisonburg, Virginia**
   Unless Otherwise Designated
2. **We reserve the right to ship substitute parts or alternate parts when interchangeable with the part ordered. The invoice will cover the price of the actual part shipped.**
3. **All orders requiring SPECIAL HANDLING for delivery to either the local bus station or the airport, will have a $25 additional charge invoiced or actual cost whichever is higher.**
4. **Refer to latest revision of Form 1278 for terms of sale.**
5. **Refer to latest revision of Form 6690 for pricing.**

IMPORTANT! INCLUDE ORIGINAL UNIT SERIAL NUMBER WITH ORDER.

DEFROST ELEMENTS
(COIL)

230V ECE SERIES 'C' 230V

PART NUMBER	MODEL								
	45	65	85	120	180	240	360	480	720
E210411	2								
E210412		2							
E210413			2						
E210414				2					
E210415					2				
E210416						3			
E210614							3		
E210478								6	
E210480									6

ECLS SERIES 'A' (Prior to S/N 72091001)

PART NUMBER	MODEL					
	45	85	130	170	210	270
E210648	2					
E210649		2				
E210650			2			
E210651				2		
E210652					2	
E210669						2

230V ECLS SERIES 'B-C-D' (After S/N 72091002) 230V

PART NUMBER	MODEL						
	45	65	85	130	170	210	270
B413004001	2						
B413004002		2					
B413004003			2				
B413004004				2			
B413004005					2		
B413004006						2	
B413004007							2

460V ECLS SERIES 'B-C-D' (After S/N 720091002) 460V

PART NUMBER	MODEL						
	45	65	85	130	170	210	270
B413005001	2						
B413005002		2					
B413005003			2				
B413005004				2			
B413005005					2		
B413005006						2	
B413005007							2

230V NDE SERIES 'D' 230V

PART NUMBER	MODEL							
	45	65	85	105	120	150	180	280
B413007001	2							
B413007002		2						
B413007003			2					
B413007004				2				
B413007005					2			
B413007006						2		
B413008001*							4	
B413008002*								4

*These are 120V Heaters. Two are required in series for 230V

460V ECE SERIES 'C' 460V

PART NUMBER	MODEL						
	45	65	85	120	180	240	360
E210520	2						
E210521		2					
E210522			2				
E210523				2			
E210524					2		
E210525						3	
E210526							3

EDA SERIES 'B-C' (STEEL)

PART NUMBER	MODEL					
	65	85	120	180	240	360
E210139	6					
E210148		6				
E210030			12			
E210034				16		
E210142					18	
E210053						22

EDE SERIES 'B-C' (COPPER)

PART NUMBER	MODEL						
	45	65	85	120	180	240	360
E210055	6						
E210058		6					
E210059			6				
E210054				12			
E210055					16		
E210056						18	
E210049							22

230V NDE SERIES 'B-C' 230V

PART NUMBER	MODEL						
	45	65	85	105	120	180	280
E210595	2						
E210596		2					
E210597			2				
E210598				2			
E210599					2		
E210600						6	
E210601							6

If replacement of Defrost Termination Thermostat is required, specify thermostat #210716. This thermostat has a 30°F "Fan-On" setting to restart fans after completion of defrost.

WJE SERIES 'A-B-C

PART NUMBER	MODEL						LENGTH (INCHES)
	35 & 45	65	85 & 105	120	180	240	
E210374	1						49½
E210375	1						55½
E210376	1						60 1/8
E210377		1					66 1/8
E210378		1					72 1/8
E210379		1					76¾
E210380			1				82 1/8
E210381			1				88 1/8
E210382			1				92¾
E210383				1			85¼
E210384				1			91¼
E210385				1			95 7/8
E210386					1	2	123¼
E210388					1	2	134 3/8

230V ECE SERIES 'A THRU D' 230V

PART NUMBER	MODEL								
	45	65	85	120	180	240	360	480	720
E210418	1								
E210419		1							
E210420			1						
E210421				1					
E210422					1				
E210423						1			
E210424							1		
E210479								2	
E210481									2

460V ECE SERIES 'A THRU D' 230V

PART NUMBER	MODEL								
	45	65	85	120	180	240	360	480	720
E210527	1								
E210528		1							
E210529			1						
E210530				1					
E210531					1				
E210532						1			
E210533							1		
E210534								2	
E210535									2

115V EDE SERIES 'A-B-C' * 115V

PART NUMBER	MODEL						
	45	65	85	120	180	240	360
E210341	4						
E210342		4					
E210343			4				
E210344				4			
E210345					4		
E210346						4	
E210347							4

*Elements shipped in straight lengths for field bending.

NOTE: Drain pan replacement heater elements are applicable for units with Serial No. MCA-31701 and later.

230V ECLS SERIES 'A' PRIOR TO S/N 72091001

PART NUMBER	MODEL					
	45	85	130	170	210	250
E210654	1					
E210655		1				
E210656			1			
E210657				1		
E210658					1	
E210679(128")						1
E210680(132")						1

230V ECLS SERIES 'B-C-D' AFTER S/N 72091002

PART NUMBER	MODEL						
	45	65	85	130	170	210	270
B413004008	1						
B413004009		1					
B413004010			1				
B413004011				1			
B413004012					1		
B413004013						1	
B413004014							1

460V ECLS SERIES 'B-C-D' AFTER S/N72091002

PART NUMBER	MODEL						
	45	65	85	130	170	210	270
B413005008	1						
B413005009		1					
B413005010			1				
B413005011				1			
B413005012					1		
B413005013						1	
B413005014							1

DRAIN PANS
(LESS HEATERS)

CJ SERIES 'A'

PART NUMBER	MODEL			
	45	65	85	105
L86816	1	1	1	1

ECA AND ECE SERIES 'A-B-C'

PART NUMBER	MODEL								
	45	65	85	120	180	240	360	480	720
B110747GO1	1								
B110747GO2		1							
B110747GO3			1						
B110747GO4				1					
B110747GO5					1				
B110747GO6						1			
B110747GO7							1		
B111127GO1								1	
B111116GO2									1

ECE SERIES 'D'

PART NUMBER	MODEL					
	120	180	240	360	480	720
B110747GO4	1					
B110747GO5		1				
B110747GO6			1			
B110747GO7				1		
B111116GO1					1	
B111116GO2						1

EDA AND EDE SERIES 'C' *

PART NUMBER	MODEL						
	45	65	85	120	180	240	360
C15066	1						
C15067		1					
C15063			1				
C15068				1			
C15069					1		
C15064						1	
C15070							1

*Contact Parts Dept. when updating old style units with pads.

ECLS SERIES 'A' (PRIOR TO S/N 72091001)

PART NUMBER	MODEL			
	45	85	130	170
B113017GO1	1			
B113017GO2		1		
B113017GO3			1	
B13017GO4				1

ECLS SERIES 'B-C' (AFTER S/N 72091002) *

PART NUMBER	MODEL						
	45	65	85	130	170	210	270
B116957GO1	1						
B116957GO2		1					
B116957GO3			1				
B116957GO4				1			
B116957GO5					1		
B116957GO6						1	
B116957GO7							1

*Can also use Replacement Drain Pan Kit listed at end of this section.

ECLS SERIES 'D'

PART NUMBER	MODEL						
	45	65	85	130	170	210	270
000524A1	1						
000524A2		1					
000524A3			1				
000524A4				1			
000524A5					1		
000524A6						1	
000524A7							1

HCE SERIES 'D'

PART NUMBER	MODEL					
	120	180	240	360	480	720
B110960GO1	1					
B110871GO1		1				
B110961GO1			1			
B110963GO1				1		
B111116GO3					1	
B111116GO4						1

ND AND NDE SERIES 'B-C'

PART NUMBER	MODEL						
	45	65	85	105	120	180	280
B115031GO1	1						
B115031GO2		1					
B115031GO3			1				
B115031GO4				1			
B115031GO5					1		
B115031GO6						1	
B115031GO7							1

ND, NDE AND NDH SERIES 'D'

PART NUMBER	MODEL								
	35	45	65	85	105	120	150	180	280
C111449GO1	1	1	1	1	1	1	1	1	1

UC AND UCA SERIES 'D'

PART NUMBER	MODEL					
	120	180	240	360	480	720
B110747G11	1					
B110747G12		1				
B110747G13			1			
B110747G14				1		
B111116GO3					1	
B111116GO4						1

UCH SERIES 'D'

PART NUMBER	MODEL					
	120	180	240	360	480	720
B110960GO1	1					
B110871GO1		1				
B110961GO1			1			
B110963GO1				1		
B111122GO1					1	
B111123GO1						1

DRAIN PANS
(LESS HEATERS)
(Cont'd)

UCLS SERIES 'A'

PART NUMBER	MODEL					
	52	104	156	208	260	312
B112578GO1	1					
B112578GO2		1				
B112578GO3			1			
B112578GO4				1		
B112578GO5					1	
B112578GO6						1

WJ AND WJE OLD STYLE-PRIOR 1958

PART NUMBER	MODEL				
	35	45	65	85	105
C40298	1				
C41088		1			
C40275			1		
C43973				1	1

Must supply Serial Number when ordering.

UCLS SERIES 'B-C' *

PART NUMBER	MODEL						
	52	78	104	156	208	260	312
B116957GO1	1						
B116957GO2		1					
B116957GO3			1				
B116957GO4				1			
B116957GO5					1		
B116957GO6						1	
B116957GO7							1

*Can also use Replacement Drain Pan Kit listed at end of this section.

WJ AND WJE SERIES 'A-B-C' AFTER 1958

PART NUMBER	MODEL							
	35	45	65	85	105	120	180	240
D104645001	1	1						
D104645002			1					
D104645003				1	1			
B18063001						1		
B18272001							1	1

UCLS SERIES 'D'

PART NUMBER	MODEL						
	52	78	104	156	208	260	312
000524A1	1						
000524A2		1					
000524A3			1				
000524A4				1			
000524A5					1		
000524A6						1	
000524A7							1

WJ SERIES 'D'

PART NUMBER	MODEL								
	35	45	65	85	105	120	150	180	240
C111227001	1	1	1	1	1	1	1	1	1

ECLS, UCLS REPLACEMENT DRAIN PAN KIT SERIES 'B-C'

PART NUMBER	MODEL													
	45	65	85	130	170	210	270	52	78	104	156	208	260	312
001182A1	1							1						
001182A2		1							1					
001182A3			1							1				
001182A4				1							1			
001182A5					1							1		
001182A6						1							1	
001182A7							1							1

FANS

CJ SERIES 'A'

PART NUMBER	FAN SIZE	45 45	65 65	85 85	105 105
E210328	N1427-3½	1			
E201311	N1627-3½		1		
E210333	N1820-4½			1	2

CU SERIES 'A'

PART NUMBER	10	13	17	23	30
See Motor-Fan is sold only with motor					

EDA AND EDE SERIES 'A'

PART NUMBER	FAN SIZE	45	65	85	120	180	240	360
E210328	N1429-3½D	1	1					
E210311	N1627-3½B			1				
E210329	N1622-3½B				2			
-	-					NA	NA	NA

ECE SERIES 'A-D'

PART NUMBER	FAN SIZE	45	65	85	120	180	240	360	480	720
E210425	N1228-4½	1								
E210426	N-1234-4½		1							
E210427	N1224-5 5/16			2						
E210428	N-1422-4½				2					
E210556	N1632-3½					2				
E210557	N1832-3½						2			
E210558	N2220-4 5/8							2		
E210559	N2416-4 5/8								3	4

ECU SERIES 'A'

PART NUMBER	10	15	19	28	35
See Motor - Fan is sold only with motor					

ECLS SERIES 'A' (PRIOR TO S/N 72091001)

PART NUMBER	FAN SIZE	45	85	130	170	210	250
DEV1816	1040-6	1	2	3	4	5	6

ECLS SERIES 'B-C-D" (AFTER S/N 72091002)

PART NUMBER	FAN SIZE	45	65	85	130	170	210	270
00565A1	1040-5	1	2	2	3	4	5	6

NOTE: This fan **CANNOT** be used with motors MM2847 (FASCO#7163-2692) and MM2848 (FASCO #7163-2737). Use DEV1816 fan on these two motors.

GCLS SERIES 'A'

PART NUMBER	FAN SIZE	45	85	130	170	210	250
DEV1816	1040-6	1	2	3	4	5	6

HCE SERIES 'D' S/N A50815-UP

PART NUMBER	FAN SIZE	45	65	85	120	180	240	360	480	720
E210328	N1429-3½	1								
E210425	N1228-4½	1								
E210426	N1234-4½		1							
E210311	N1627-3½			2						
E210427	N1224-4 5/16			2						
E210329	N1622-3½				2					
E210428	N1422-4½				2					
E210556	N1632-3½					2				
E210557	N1832-3½						2			
E210558	N2220-4 5/8							2		
E210559	N2416-4 5/8								3	4

NOTE: Check size of old fan with above listing before ordering.

381

HCLS SERIES 'D'

PART NUMBER	FAN SIZE	85	130	170	210	270
000565A1	1040-5	2	3	4	5	6

JF SERIES 'A'

PART NUMBER	FAN SIZE	19	12	16	25
E210077	OUH-813-5¼B	1	1		
-	-			NA	
E210080	01031-5 5/16 B				1

LUC, LUCE ALL SERIES

PART NUMBER	FAN SIZE	1200	1500	1800	2200	3000
E211195	3028-4	1	1	1	1	
E211199	4238-4					1

ND AND NDE SERIES 'B-C' (S/N YF1E & UP)

PART NUMBER	FAN SIZE	45	65	85	105	120	180	280
E230336	N1024-4½	2						
E230337	N1034-4½		2					
-	N1040-4½			NA				
E230339	N1234-4½				2			
E230340	N1433-4½					2		
E230341	N1440-4½						2	2

NOTE: Fans for Series 'A' units are not longer available.

ND, NDE AND NDH SERIES 'D'

PART NUMBER	FAN SIZE	45	65	85	105	120	180	280
000565A1	1040-5	1	1	1	1	1	1	1

UC AND UCA SERIES 'B-C'

PART NUMBER	FAN SIZE	35	45	65	85	105	120	180	240	320	480	720
-	-	NA	NA			NA						
E210311	N1627-3½			1	1			2				
E210328	N1429-3½						2					
E210464	N1418-4½						2					
E210553	N1618-3½							2				
E210554	N1820-3½								2			
E210555	N2215-4½									2		
E210620	S24164½										3	4

NOTE: Check size of old fan with above listings before ordering.

UCH SERIES 'D'

PART NUMBER	FAN SIZE	120	180	240	360	480	720
E210464	N1418-4½	2					
E210556	N1632-3½		2				
E210557	N1832-3½			2			
E210558	N2220-4½				2		
E210559	N2416-4 5/8					2	3

FANS (Cont'd)

UCLS SERIES 'A' (PRIOR S/N 72091001)

PART NUMBER	FAN SIZE	52	104	156	208	260	312
DEV1816	1040-6	1	2	3	4	5	6

UCLS SERIES 'B-C-D' (AFTER S/N 72091002

PART NUMBER	FAN SIZE	52	78	104	156	208	260	312
000565A1	1040-5	1	2	2	3	4	5	6

NOTE: This fan **CANNOT** be used with motors MM2847 (FASCO#7163-2692) and MM2848 (FASCO #7163-2737. Use DEV1816 Fan on these two motors.

WJ & WJE SERIES 'A' S/N BEGINNING WITH UC-A-YF)

PART NUMBER	FAN SIZE	35	45	65	85	105	120	180	240
E210327	N1223-3½B	1	1						
E210320	N1429-3½			1					
E210328	N1427-3½			1					
E210311	N1627-3½				1				
E210329	N1622-3½					1			
E210333	N1820-4½						1		2
E210332	N1816-4½							2	

NOTE: Check size of old fan with above listings before ordering.

WJ SERIES 'B' (1973 - PRESENT) PART

PART NUMBER	FAN SIZE	35	45	65	85	105	120	150	180	240
E230095	1038-5½B	1	1							
A455026001	1236-4½B			1	1					
A455027001	1436-4½B					1	1			
E230296	6122-4½B							1	2	
A455028001	1640-4½B									2

FAN GUARDS

EC SERIES 'A' THRU D'

PART NUMBER	MODEL								
	45	65	85	120	180	240	360	480	720
E210442	1	1	2						
E210100				2					
E210101					2				
E210102						2			
E210103							2		
E210104								3	4

ED & HG SERIES 'B-C'

PART NUMBER	MODEL						
	45	65	85	120	180	240	360
E210100	1	1					
E210101			1	2			
E210102					2		
E210103						2	
E210104							2

ND, NDE & NDH SERIES 'D' (1973 TO PRESENT)

PART NUMBER	ALL SERIES
000707A1	As Required

ECLS, UCLS SERIES 'B THRU D'

PART NUMBER	ALL SERIES
000939A1	As Required

UC & UCH SERIES 'D'

PART NUMBER	MODEL					
	120	180	240	360	470	720
E210100	2					
E210101		2				
E210102			2			
E210103				2		
E210104					3	4

HC SERIES 'D'

PART NUMBER	MODEL								
	45	65	85	120	180	240	360	480	720
E210442	1	1	2						
E210100				2					
E210101					2				
E210102						2			
E210103							2		
E210104								3	4

KIT PARTS

CONTACTORS

PART NUMBER	DESCRIPTION	EC KIT SERIES A	ED KIT SERIES B	ED KIT SERIES C	HC KIT SERIES B-C
CTRD3N1E	3P 30 amp 115V	1			1
CTRD3N2E	3P 30 amp 230V	1			1
CTRD4N1E	4P 40 amp 115V	1			1
CTRD4N2E	4P 40 amp 230V	1	1	1	1
E210326	CR 153C003-BMA-230V			1	
E210265	CR 153D003-AAA-230V		1	1	
E210496	CR 153D103-ARA-230V	1			

HEAT EXCHANGERS

PART NUMBER	DESCRIPTION	ALL HOT GAS SYSTEM
E210251	HCX 212	1
E210252	HCX 218	1
E210253	HCX 318	1
E210254	HCX330	1
E210255	HCX 418	1
E210256	HCX 430	1
E210257	HCX 524	1
E210258	HCX 536	1
E210514	HCX 636	1
E210515	HCX 736	1

HC UNIT LINE AND THROTTLING VALVE

PART NUMBER	SIZE	45	65	85	120	180	240	360
E210315	3/8"	1	1	1				
E210316	1/2"				1	1	1	1

RELAY

PART NUMBER	DESCRIPTION	ED KIT SERIES C	HC KIT SERIES D
A388058002	PR11AY-115V	1	1
RLY106	-230V	1	1

STRAINERS

PART NUMBER	DESCRIPTION	ALL HOT GAS SYSTEM
E210190	911 x 5/8	1
E210191	914 x 7/8	1
E210192	922 x 1 1/8	1
E210193	922 x 1 3/8	1

THERMOSTATS

PART NUMBER	DESCRIPTION	EC KIT SERIES A	ECLS KIT SERIES A	ECLS, UCLS SERIES B-C-D HCLX	ED KIT SERIES B	HC KIT SERIES A	HC KIT SERIES D	LUCE ALL SERIES	NDH-UCH ALL SERIES
E210031	Penn 29OT-115V				1		1		
E210716	Ranco F25-115	1	1			1		1	1
A414009001	Ranco F25-115			1					

TIMERS

TIMERS PART NUMBER	DESCRIPTION	EC KIT SERIES A	ED KIT SERIES A	ED KIT SERIES B	ED KIT SERIES C	GCLS	HG KIT SERIES A	HC KIT SERIES B	HC KIT SERIES D	LUCE ALL SERIES
E210233	AUX-230V			1					1	
A410055002	A119-0-115V				1					
TMR38T1	A119-0-230V				1				1	
E210686	B633-0-115V					1				
E210689	B633-0-230V					1				
E210157	TD1254-0-115V		1				1			
E210158	TD1254-0-230V		1				1			
E210447	3990-0-230V	1							1	1
E210230	8102-115V			1				1	1	
E210232	8102-230V			1				1	1	
E210446	8145-0-115V								1	1

394

MOTORS

115/1/60 CJ SERIES 'A' 115/1/60

PART NUMBER	MODEL			
	45	65	85	105
E310025	1	1	1	1

115/1/60 CU SERIES 'A' 115/1/60

PART NUMBER	MODEL				
	10	13	17	23	30
E330131	1	1	2	2	3

230/1/60 CU SERIES 'A' 230/1/60

PART NUMBER	MODEL				
	10	13	17	23	30
E330132	1	1	2	3	3

115/1/60 ECLS SERIES 'A' 115/1/60
PRIOR TO S/N72091001

PART NUMBER	MODEL					
	45	85	130	170	210	250
E310185	1	2	3	4	5	6

230/1/60 ECLS SERIES 'A' 230/1/60
(PRIOR TO S/N 82091001

PART NUMBER	MODEL					
	45	85	130	170	210	250
E310186	1	2	3	4	5	6

115/1/60 ECLS & HCLS SERIES 'B THRU D' 115/1/60
(AFTER S/N 72091002)

PART NUMBER	MODEL						
	45	65	85	130	170	210	270
000514A1	1	2	2	3	4	5	6

NOTE: This motor replaces MM2847 (FASCO #7163-2692).
Must also replace fan with 000565A1.

208/230/1/60 ECLS & HCLS SERIES 'B THRU D' 208/230/1/60
(AFTER S/N 72091002)

PART NUMBER	MODEL						
	45	65	85	130	170	210	270
00051481	1	2	2	3	4	5	6

NOTE: This motor replaces MM2848 (FASCO#7163-2737).
Must also replace Fan with 000565A1.

208/230/1/60 EC & ECE SERIES 'A THRU D' 208/230/1/60

PART NUMBER	MODEL								
	45	65	85	120	180	240	360	480	720
E310096	1								
E310094		1		2					
E310095			2						
E310034					2				
MM2895001*						2	2	3	4

*NOTE: 001001 Spacer Kit is required when installing motor.

208/230/1/60 EDE & EDA SERIES 'A THRU D' 208/230/1/60

PART NUMBER	MODEL						
	45	65	85	120	180	240	360
E310019	1	1	1	2			
E310034					2	2	
MM895001*							2

*NOTE: 001001 Spacer Kit is required when installing motor.

115/1/60 ECU SERIES 'A' 115/1/60

PART NUMBER	MODEL				
	10	15	19	28	35
E330131	1	2	2	3	4

230/1/60 ECU SERIES 'A' 230/1/60

PART NUMBER	MODEL				
	10	15	19	28	35
E330132	1	2	2	3	4

115/1/60 GCLS SERIES 'A' 115/1/60

PART NUMBER	MODEL					
	45	85	130	170	210	250
E310185	1	2	3	4	5	6

230/1/60 GCLS SERIES 'A' 230/1/60

PART NUMBER	MODEL					
	45	85	130	170	210	250
E310186	1	2	3	4	5	6

115/1/60 HCE SERIES 'C' 115/1/60
(PRIOR TO S/N A50845)

PART NUMBER	MODEL						
	45	65	85	120	180	240	360
E310174	1	1	1				
E310030				2	2	2	
MM2894001*							2

*NOTE: 001001 Spacer Kit is required when installing motor.

230/1/60 HCE SERIES 'C' 230/1/60
(PRIOR TO S/N A50845)

PART NUMBER	MODEL						
	45	65	85	120	179	249	360
E310175	1	1	1				
-				NA			
MM2895001*					2	2	2

*NOTE: 001001 Spacer Kit is required when installing motor.

115/1/60 HCE SERIES 'D' 115/1/60
(S/N A50845-UP)

PART NUMBER	MODEL								
	45	65	85	120	180	240	360	480	720
E310080	1								
-		NA		NA					
E310079			2						
E310030					2				
MM289400*						2			
E310082							2	3	4

*NOTE: 001001 Spacer Kit is required when installing motor.

230/1/60 HCE SERIES 'D' 230/1/60
(S/N A50845-UP)

PART NUMBER	MODEL								
	45	65	85	120	180	240	360	480	720
E310096	1								
E310094		1		2					
E310095			2		2				
E310034						2			
MM2895001*							2	3	4

*NOTE: Supply 001001 Spacer Kit

MOTORS
(Cont.'d)

MISC. HCE MOTORS SERIES 'D'

PART NUMBER	VOLT VOLT	MODEL 45	65	85	120	180	240	360	480	720
E310184*	115	1	1	1	2					
E310183*	230	1	1	1	2					
E310181*	115					2				
E310109	208/230/3/60					2				
E310111	208/230/3/60						2	2	3	4

*NOTE: These motors are explosion proof.

115/1/60 JF SERIES 'A' 115/1/60

PART NUMBER	MODEL 9	12	16	25
-	NA	NA		
E310003			1	
E310005				1

230/1/60 JF SERIES 'A' 230/1/60

PART NUMBER	MODEL 9	12	16	25
E310002	1	1		
E310004			1	
E310006				1

230/460/3/60 LUC, LUCE ALL SERIES 230/460/3/60

PART NUMBER	MODEL 1200	1500	1800	2200	3000	HP
E313166	1	1	1	1		1
MM2014301					1	5

115/1/60 ND & NDE SERIES 'A' 115/1/60 (PRIOR 1964)

PART NUMBER	MODEL 45	65	85	180
E310071	2	2	2	
-				NA

115/1/60 ND & NDE SERIES 'B-C' 115/1/60 (S/N YF1E-UP)

PART NUMBER	MODEL 45	65	85	105	120	180	280
E310112	2	2	2	2	2		
E310174						2	
E310173							2

230/1/60 ND & NDE SERIES 'B-C' 230/1/60 (S/N YF1E-UP)

PART NUMBER	MODEL 45	65	85	105	120	180	280
E310113	2	2	2	2	2		
E310175						2	
E310176							2

115/1/60 ND, NDE & NDH SERIES D 115/1/60 (PRESENT)

PART NUMBER	MODEL 45	65	85	105	120	180	280
000514A1	1	1	1	1	1	1	1

230/1/60 ND, NDE & NDH SERIES 'D' 230/1/60 (PRESENT)

PART NUMBER	MODEL 45	65	85	105	120	180	280
000514B1	1	1	1	1	1	1	1

MOTORS
(Cont'd)

115/1/60 UC & UCA SERIES 'D' 115/1/60
(S/N YF12D-UP)

PART NUMBER	MODEL										
	35	45	65	85	105	120	180	240	360	480	720
-	NA										
E310080		1				2					
E310030				1			2	2			
-			NA		NA						
MM2894001*									2	3	4

*NOTE: 001001 Spacer Kit is required when installing motors.

230/1/60 UC & UCA SERIES 'D' 230/1/60
(S/N YF12D-UP)

PART NUMBER	MODEL										
	35	45	65	85	105	120	180	240	360	480	720
-	NA										
E310096		1				1					
E310034				1			2	2			
-			NA		NA						
MM2895001*									2	3	4

*NOTE: 001001 Spacer Kit is required when installing motors.

115/1/60 UC & UCH SERIES 'D' 115/1/60

PART NUMBER	MODEL					
	120	180	240	360	380	720
001982A1	2					
MM2894001		2	2	2	2	2

230/1/60 UC & UCH SERIES 'D' 230/1/60

PART NUMBER	MODEL					
	120	180	240	360	480	720
E310094	2					
MM2895001		2	2	2	2	3

115/1/60 UCLS SERIES 'A' 115/1/60
(PRIOR S/N 72091001)

PART NUMBER	MODEL					
	52	104	156	208	260	312
E310185	1	2	3	4	5	6

230/1/60 UCLS SERIES 'A' 230/1/60
(PRIOR S/N 72091001

PART NUMBER	MODEL					
	52	104	156	108	260	312
E310186	1	2	3	4	5	6

115/1/60 UCLS SERIES 'B-C-D' 115/1/60
(AFTER S/N 72091002)

PART NUMBER	MODEL						
	52	78	104	156	208	260	312
00514A1	1	2	2	3	4	5	6

NOTE: This motor replaces MM2847 (FASCO #7163-2693).
Must also replace fan with 000565A1.

397

230/1/60 UCLS SERIES 'B-C-D' 230/1/60
(AFTER S/N 72091002)

PART NUMBER	MODEL						
	52	78	104	156	208	260	312
000514B1	1	2	2	3	4	5	6

NOTE: This motor replaces MM2848 (FASCO #7163-2737). Must also replace fan with 000565A1.

115/1/60 WJ AND WJE SERIES 'A' 115/1/60
(S/N BEGIN WITH UC AND A AND ENDING YF12D)

PART NUMBER	MODEL							
	35	45	65	85	105	120	180	240
-	NA	NA						
E310020			1	1				
E310031					1			
MM1136						1	2	2

230/1/60 WJ & WJE SERIES 'A' 230/1/60
(S/N BEGIN WITH UC AND A AND ENDING YF12D)

PART NUMBER	MODEL							
	35	45	65	85	105	120	180	240
E310046	1	1						
-			NA	NA	NA	NA	NA	NA

115/1/60 WJ SERIES 'A' & WJE SERIES 'B' 115/1/60
(STARTING WITH S/N YF12D)

PART NUMBER	MODEL							
	35	45	65	85	105	120	180	240
E310149	1	1						
-			NA	NA				
E310151					1			
MM1136						1	2	2

230/1/60 WJ SERIES A & WJE SERIES B 230/1/60
(STARTING WITH S/N YF12D)

PART NUMBER	MODEL							
	35	45	65	85	105	120	180	240
-	NA	NA						
E310154			1	1				
-					NA			
E310156						1	2	2

115/1/60 WJ SERIES B 115/1/60
(1973 - PRESENT)

PART NUMBER	MODEL								
	35	45	65	85	105	120	150	180	240
0005140	1	1							
MM1008			1	1					
MM1138					1	1	1	2	
MM1469									2

398

Exhibit D-3

DESCRIPTION		D/B PA NO. STANDARD	D/B PA NO. ALTERNATE	QTY
380/3/50				
CONTROL BOX 115-1-50		X2723X 25		
CONTROL CIRCUIT BREAKER (1CB)	*	BKR 75		1
OIL HTR CIRCUIT BREAKER (2CB)	*	BKR 74		1
MASTER CONTROL RELAY (1CR)	*	RLY 126		1
TRANSFER RELAY (2CR)	*	RLY 126		1
LOCK IN RELAY (4CR)		RLY 129		1
HOLDING RELAY (8CR)		RLY 135		1
COMPRESSOR CONTROL RELAY (3CR)	*	RLY 126		1
ANTI-RECYCLE TIMER (1TR)	*	TMR 114		1
OIL PRESS. FAILURE TIMER (2TR)	*	TMR 83		1
OIL PUMP SHUTDOWN TIMER (3TR)	*	TMR 83		2
START-UP TIME DELAY TIMER (4TR)(7TR)	*	TMR 83		1
ELAPSED TIME INDICATOR (6TR)		TMR 86		1
HI/LO PRESS. CONTROL (1PS)		CNT 175		1
LOW SUCTION PRESSURE PUMP-DOWN AND UNLOAD CONTROL (2PS)		CNT 167		1
OIL FAILURE CONTROL (3PS)		SWT 80		1
TEMPERATURE LOAD CONTROL (TLC)	*	CNT 232T2		1
TEMPERATURE CONTROL 12TAS,	*	CNT 231		1
CHILLED WATER THERMOSTAT (2TAS)		CNT 55		1
ON/OFF SWITCH WITH LIGHT (RED) (1SS)		SWT 82		1
POWER ON (1LT)				
LAMP (RED, SAFETY SWITCHES, OIL FAILURE)(2LT, 3LT)		LMP 10		3
LAMP (AMBER, ANTI-RECYCLE TIMER, START UP DELAY) (4LT, 5LT)		LMP 11	**	2
OIL PUMP STARTER (1M)		SRTD3A3D10		1
TRANSFORMER (24V SEC) (2T)		TSF 26		1
PUMP STARTER AUX CONTACT (AUX)		SWT 71		1
SUCTION PRESSURE GAGE		GAG 40		1
DISCHARGE, OIL PRESSURE GAGES		GAG 41		2
GUAGE - TEMP		GAG 46		1

* 1 YEAR PARTS

1	600-0193	12/13/77 UPDATED
2	600-0204	7/24/78 UPDATED

This drawing contains designs and other information which are the property of DUNHAM-BUSH, INC. This drawing may not, in whole or in part, be duplicated or disclosed or used for manufacture of part disclosed herein, without the prior written permission of DUNHAM-BUSH, INC.

DUNHAM-BUSH, INC.
WEST HARTFORD CONN 06110 U.S.A.
WEST HARTFORD DIVISION

PART NAME: REPLACEMENT PARTS LIST FOR ~~APCX~~ LPCX 230-05 PKG CHILLER

MAT'L: ENGINEERING FILE NO. X-2723

SCALE	DRAWN BY	CHECKED	UNLESS OTHERWISE SPECIFIED TOLERANCE
—	NAME EJC	NAME	FRACTIONAL DIMENSIONS ±
	DATE 4-1-76	DATE	DECIMAL DIMENSIONS ±
			ANGLES ±

SUPERSEDES

A5-RPL 37 Sheet 1 of 3

* 391

DESCRIPTION	D/B PART NO. STANDARD	D/B PART NO. ALTERNATE	QTY
COMPRESSOR ASSEMBLY	2010DLF1LOD		
MAIN INJECTION GASKET	GKT 383		1
SUCTION GASKET (5")	GKT 229		1
DISCHARGE GASKET (4")	GKT 257		1
INDICATOR ASSEMBLY (SLIDE VALVE)	IDR 56A		1
SUCTION FILTER HEAD GASKET	GKT 380		1
MOTOR COUPLING	CPL 171		1
CHILLER ASSEMBLY	X2723X6		
SUCTION HEAD FILTER	FLR 47A		1
FLOW SWITCH	SWT 119		1
CHILLER RELIEF VALVE	VAL 734T1		1
CHILLER RELIEF VALVE GASKET	GA 430		1
PILOT EXPANSION VALVE	VAL 919		1
EXPANSION VALVE WITH COIL POS 75H1	VAL 460		1
CHILLER INLET HEAD GASKET	GKT 350T3		2
CHILLER OUTLET HEAD GASKET	RNG 162		1
CHILLER OUTLET CHECK VALVE	VAL 723		1
CHECK VALVE GASKET	GKT 386		2
SIGHT GLASS (MOISTURE INDICATOR)	0817G10		1
FILTER DRIER GASKET	GKT 334		1
FILTER DRIER BLOCK	BLK 41		3
FILTER DRIER VALVE GASKET (OUTLET)	GKT 60		1
TEMPERATURE SENSOR CONTROL	~~CNT~~ 233T4		1
HOT GAS CAP CONTROL	OPT 25T3		
VALVE - SOLENOID	VAL 902T5		1
COIL - SOLENOID	COL 123T1		1
UNLOAD START	OPT 24T2		
VALVE - SOLENOID	VAL 902T2		1
COIL - SOLENOID	COL 126T1		1

3	600-0204	7/24/78
2	600-0193	12/13/77
1	600-0180	7-7-77

UPDAT
UPDAT
UPDATED

This drawing contains designs and other inf[illegible]on which are the property of DUNHAM-BUSH, I[illegible] This drawing may not, in whole or in part, be duplicated or disclosed or used for manufacture of part disclosed herein, without the prior written permission of DUNHAM-BUSH, INC.

DUNHAM-BUSH, INC.
WEST HARTFORD, CONN 06110, U.S.A.
WEST HARTFORD DIVISION

PART NAME: REPLACEMENT PARTS LIST FOR IPCX 230-05 PKG CHILLER

MAT'L: ENGINEERING FILE NO. X-2723

SCALE	DRAWN BY	CHECKED	UNLESS OTHERWISE SPECIFIED TOLERANCE
—	NAME EJC	NAME	FRACTIONAL DIMENSIONS ±
	DATE 4-1-76	DATE	DECIMAL DIMENSIONS ±
			ANGLES ±

SUPERSEDES

A5-RPL 37 Sheet 2 of 3 REV 3

DESCRIPTION	D/B PART NO. STANDARD	D/B PART NO. ALTERNATE	QTY
CONDENSER ASSEMBLY	X2723X18		
CONDENSER RELIEF VALVE	VAL 734T2		2
INLET HEAD GASKET	GKT 243		1
RETURN HEAD GASKET	GKT 242		1
REFRIGERANT OUTLET GASKET	GKT 62		1
OIL SUMP ASSEMBLY	X2723X20		
RELIEF VALVE	VAL 735T3		2
RELIEF VALVE GASKET	GA 430		3
*OIL SUMP HEATER	HTR 71		2
*OIL PUMP ASSEMBLY	X2723X27		1
OIL PUMP RELIEF VALVE	VAL 720		1
OIL PUMP STRAINER	SRA 73T2		1
OIL LINE CHECK VALVE	VAL 753		1
OIL SUMP LEVEL SIGHT GLASS	GLS 16A		
GLASS	GA 210		2
RETAINING NUT	GA 211		2
BACK-UP RING	GA 212		2
GASKET	GKT 517		4
SUMP INLET GASKET	GKT 257		1
SUMP DISCHARGE GASKET	GKT 257		1
SUMP DISCHARGE CHECK VALVE GASKET	GKT 250		2
SUMP DISCHARGE CHECK VALVE	VAL 727		1
OIL FILTER ASSEMBLY	FLR 110AT1,	110AT4	
OIL FILTER "O" RING	RNG 294 T1		2
FILTER ELEMENT	FLR 125		3
FILTER ALARM "O" RINGS	RNG 238		2
	RNG 293		
OIL LINE GASKET (2 BOLT FLANGE)	GKT 340		4
ACCESSORIES			
OIL	OIL 4		40 GAL
UNLOAD SOLENOID VALVE ASSEMBLY	VAL 509A		
*24 VOLT COIL	COL 122T41		2
*115 VOLT COIL	COL 122T40		1
SOLENOID VALVE/LESS COIL	VAL 488		3
METERING VALVE	VAL 547		3

This drawing contains designs and other information which are the property of DUNHAM-BUSH. This drawing may not, in whole or in part, be duplicated or disclosed or used for manufacture of part disclosed herein, without the prior written permission of DUNHAM-BUSH, INC.

DUNHAM-BUSH, INC.
WEST HARTFORD CONN 06110 USA
WEST HARTFORD DIVISION

PART NAME: REPLACEMENT PARTS LIST FOR Jtex 230-05RK CHILLER
MAT'L: ENGINEERING FILE NO. X- 2723

SCALE	DRAWN BY	CHECKED	UNLESS OTHERWISE SPECIFIED TOLERANCE
	NAME RJC	NAME	FRACTIONAL DIMENSIONS ±
	DATE 4-1-76	DATE	DECIMAL DIMENSIONS ±
			ANGLES ±

SUPERSEDES

A5-RPL 37 Sheet 3 of 3 REV. 2

Exhibit D-4

FORM NO. 2505B

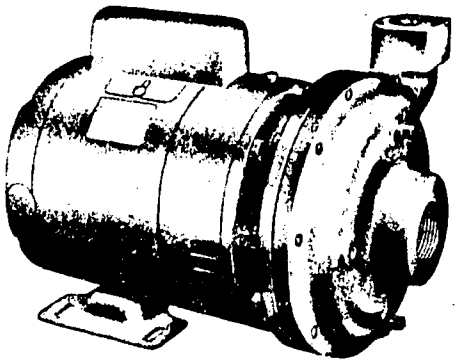

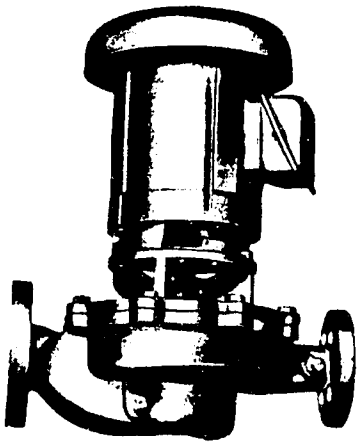

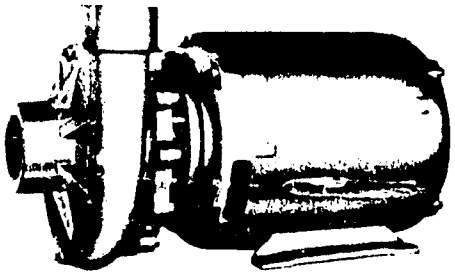

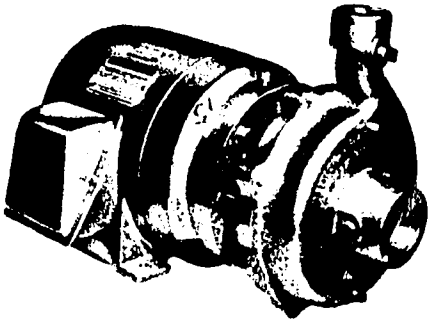

DUNHAM-BUSH

CENTRIFUGAL PUMPS
TYPE A5, A7, A9 AND PM7

PARTS SELECTION LIST

INDEX

	Pg.
NOMENCLATURE	1
ORDERING PROCEDURE	1
A5 PUMPS	
1/3 HP, 1/2 HP AND 3/4 HP	2
1 HP, 1-1/2 HP AND 2 HP	3
A9 PUMPS AND PARTS LIST	
1/2 HP, 3/4 HP AND 1 HP	4
1 1/2 HP	5
2 HP	6–7
3 HP	8
5 HP	9
7 1/2 HP	10
10 HP AND 15 HP	11
SERIES A A9 PUMPS	
1/2 HP, 3/4 HP AND 1 HP	12
1-1/2 HP	13
2 HP	14
3 HP	15
5 HP	16
7-1/2 HP	17
10 AND 15 HP	18
A7 PUMPS	
3/4", 1-1/4" AND 1-1/2" DISCHARGE	19
2" AND 2-1/2" DISCHARGE	20
PM7 PUMPS	
1", 1-1/4" AND 1-1/2" DISCHARGE	21
2" AND 2-1/2" DISCHARGE	22
A7A PUMPS	
3/4", 1-1/4 " AND 1-1/2" DISCHARGE	23
PM7A PUMPS	
1", 1-1/4" AND 1-1/2" DISCHARGE	24

DUNHAM-BUSH RESERVES THE RIGHT TO MAKE CHANGES IN SPECIFICATIONS AND DESIGN WITHOUT NOTICE.

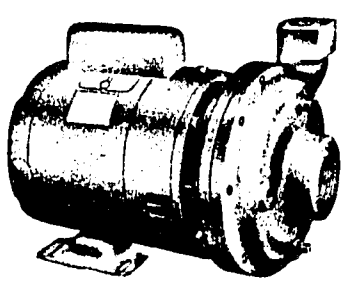

TYPE A5 PUMP

TYPE A7A AND A7 PUMPS

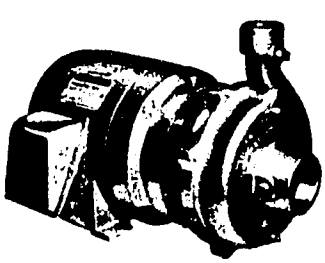

TYPE A9 PUMP

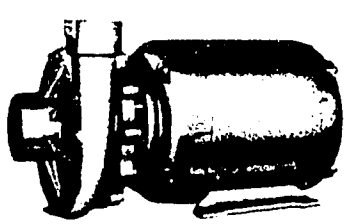

TYPE PM7 AND PM7A PUMPS

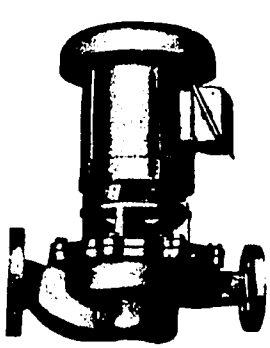

407

NOMENCLATURE

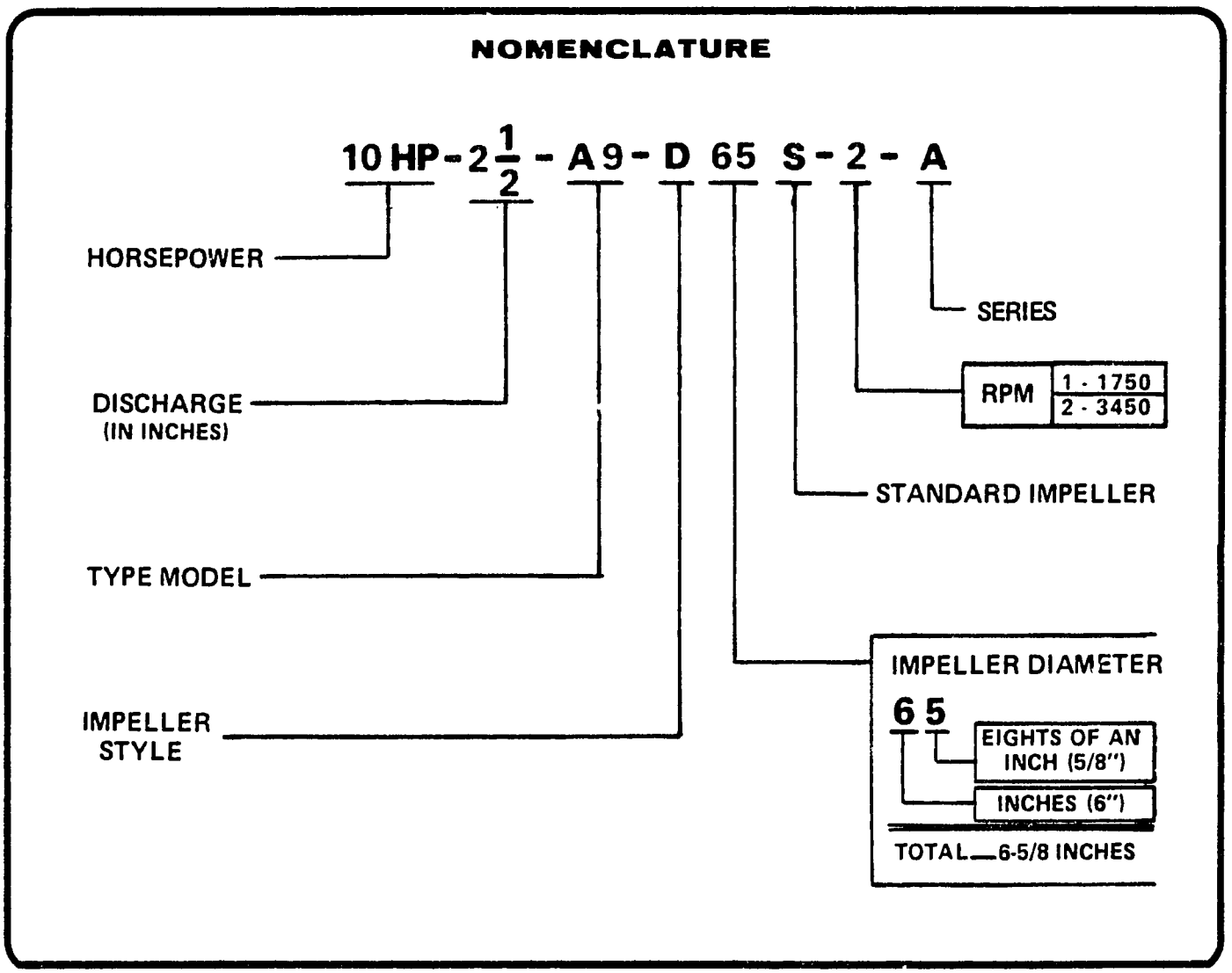

ORDERING PROCEDURE

1. Complete part number and description is required when ordering.
2. When a part number is not known or shown in the parts catalog, the complete model and serial number of the unit on which the part is to be used must be given.
3. Send all orders to:

   DUNHAM-BUSH, INC., PARTS DEPT.
   811 E. MAIN ST.
   MARSHALLTOWN, IOWA, 50158

4. Prices can be found in the latest revision of Form 17448 and are for one item or kit as applicable.
6. All prices are subject to federal, state, local or other taxes which may be applicable.
7. All orders requiring **special handling** will have a surcharge of $25.00 or the actual cost of this requirement whichever is greater.
8. Dunham-Bush reserves the right to substitute parts if they are interchangeable with those ordered. The invoice will reflect the cost of the actual part shipped.

9 Refer to latest revision of Form 17448 for prices.

10 Refer to the latest revision of Form 1278 for terms of sale.

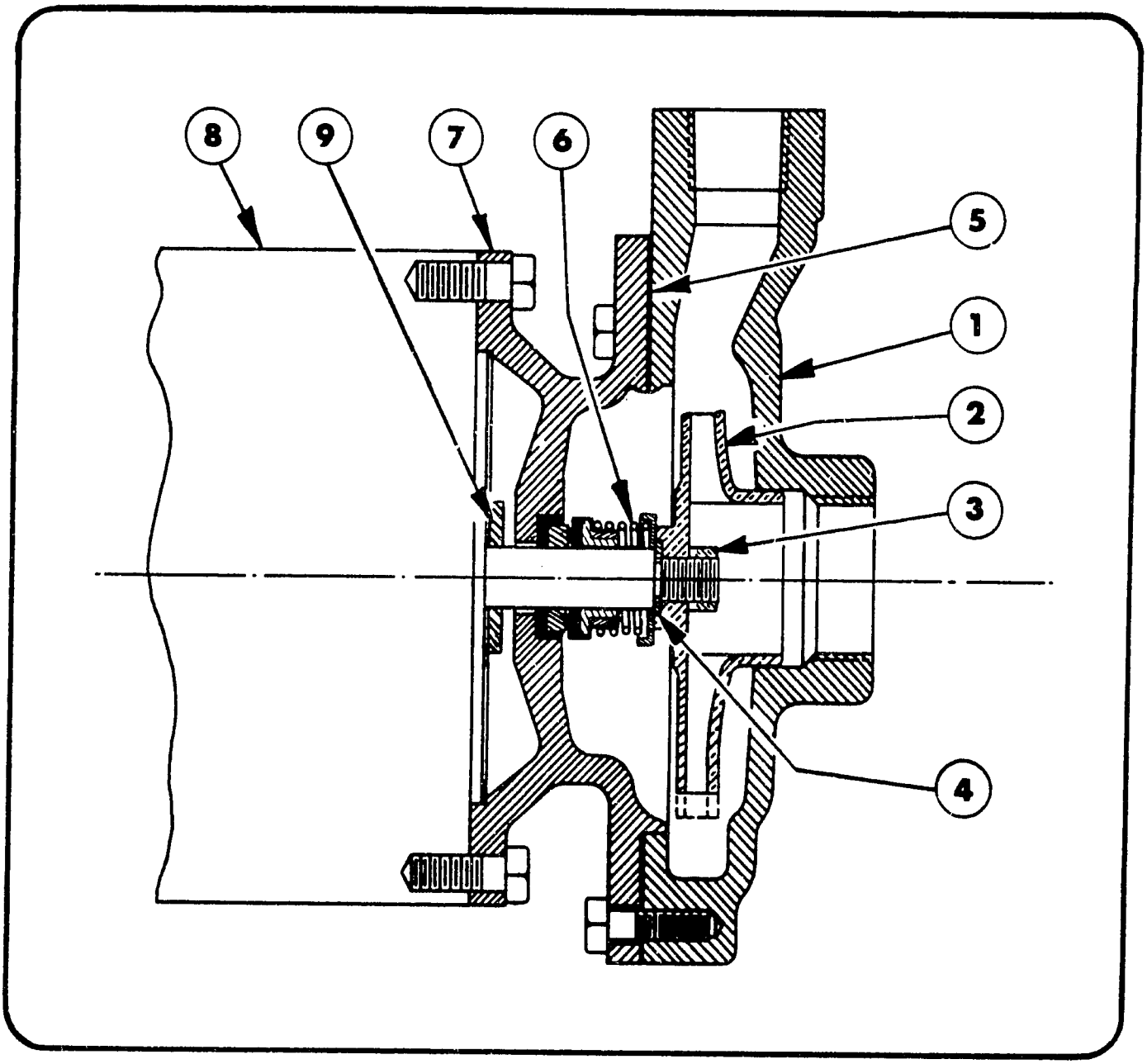

A5 PUMP AND PARTS LIST

1/3 HP, 1/2 HP AND 3/4 HP

PART NUMBER AND DESCRIPTION	1/3 HP 1" 1φ & 3φ A5C2	1/3 HP 1 1/2" 1φ & 3φ A5C2	1/2 HP 1" 1φ & 3φ A5C2	1/2 HP 1 1/2" 1φ & 3φ A5C2	3/4 HP 3/4" 1φ & 3φ A5C2	3/4 HP 1 1/2" 1φ & 3φ A5C2
1 CASE (CAST IRON) CASE (BRONZE)	E6046 E6078	E6048 E6080	E6045 E6078	E6048 E6080	E6041 E6077	E6048 E6080
2 IMPELLER	D5197x 3 15/16"	D5203x 3 1/4"	D5197x 4 5/16"	D5203x 3 5/8"	D5193x 4 5/16"	D5203x 4 3/32"
3 NUT - IMPELLER	P-116	P-116	P-116	P-116	P-116	P-116
4 WASHER	C8709	C8709	C8709	C8709	C8709	C8709
5 GASKET-CASE *	D5352	D5352	D5352	D5352	D5352	D5352
6 SEAL-SHAFT *	472	472	472	472	472	472
7 HEAD (CAST IRON) HEAD (BRONZE)	E6042 E6081	E6042 E6081	E6042 E6081	E6042 E6081	E6042 E6081	E6042 E6081
8 MOTOR	Contact Dunham-Bush, Inc., Marshalltown, Iowa					
9 SLINGER	C8854	C8854	C8854	C8854	C8854	C8854

NOTES: 1. NON-STANDARD pump parts are not shown. When ordering repair parts, refer to page 1 of this catalog.
2. * = These parts are required when replacing shaft seal.

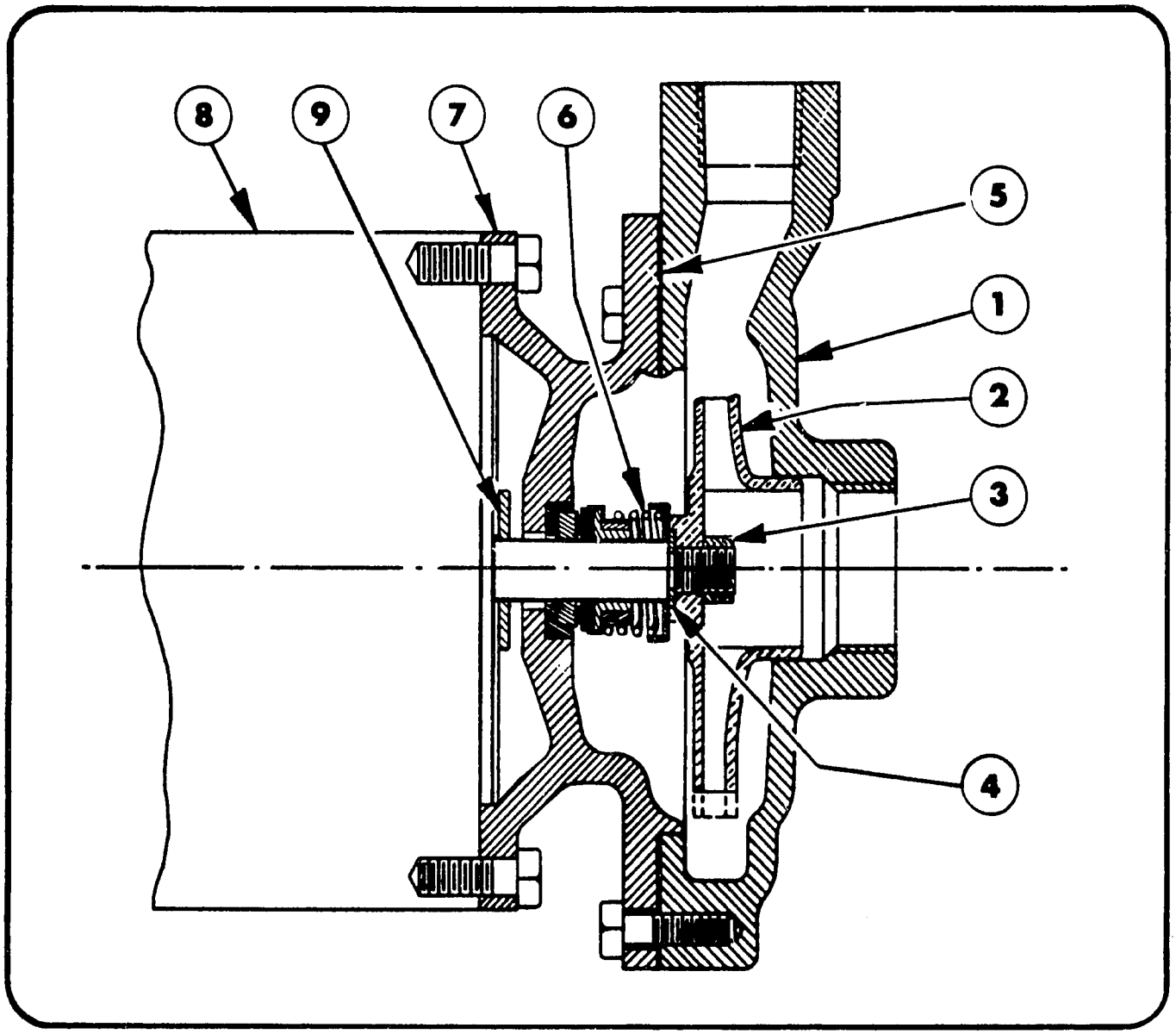

A5 PUMP AND PARTS LIST

1 HP, 1½ HP AND 2 HP

	PART NUMBER AND DESCRIPTION	1 HP ¾" 1φ & 3φ A5A2	1 HP 1½" 1φ & 3φ A5C2	1½ HP ¾" 1φ & 3φ A5A2	1½ HP 1¼" 1φ & 3φ A5B2	2 HP 1" 1φ & 3φ A5A2	2 HP 1¼" 1φ & 3φ A5B2	2 HP 1½" 1φ & 3φ A5B2
1	CASE (CAST IRON) CASE (BRONZE)	E6041 E6077	E6048 E6080	E6041 E6077	E6047 E6079	E6046 E6078	E6047 E6079	E6048 E6080
2	IMPELLER	D5193x 4 9/16"	D5203x 4 5/16"	D5193x 5"	D5199x 4 1/8"	D5195x 4 1/2"	D5199x 4 1/2"	D5202x 4 1/8"
3	NUT–IMPELLER	P-116	P-116	P-116	P-116	P-116	P-116	P-116
4	WASHER	C8709	C8709	C8709	C8709	C8709	C8709	C8709
5	GASKET–CASE *	D5352	D5352	D5352	D5352	D5352	D5352	D5352
6	SEAL–SHAFT *	472	472	472	472	472	472	472
7	HEAD (CAST IRON) HEAD (BRONZE)	E6042 E6081	E6042 E6081	E6042 E6081	E6042 E6081	E6042 E6081	E6042 E6081	E6042 E6081
8	MOTOR	Contact Dunham-Bush, Inc., Marshalltown, Iowa						
9	SLINGER	C8854	C8854	C8854	C8854	C8854	C8854	C8854

NOTES: 1. NON-STANDARD pump parts are not shown. When ordering repair parts, refer to page 1 of this catalog.
2. * = These parts are required when replacing shaft seal.

406

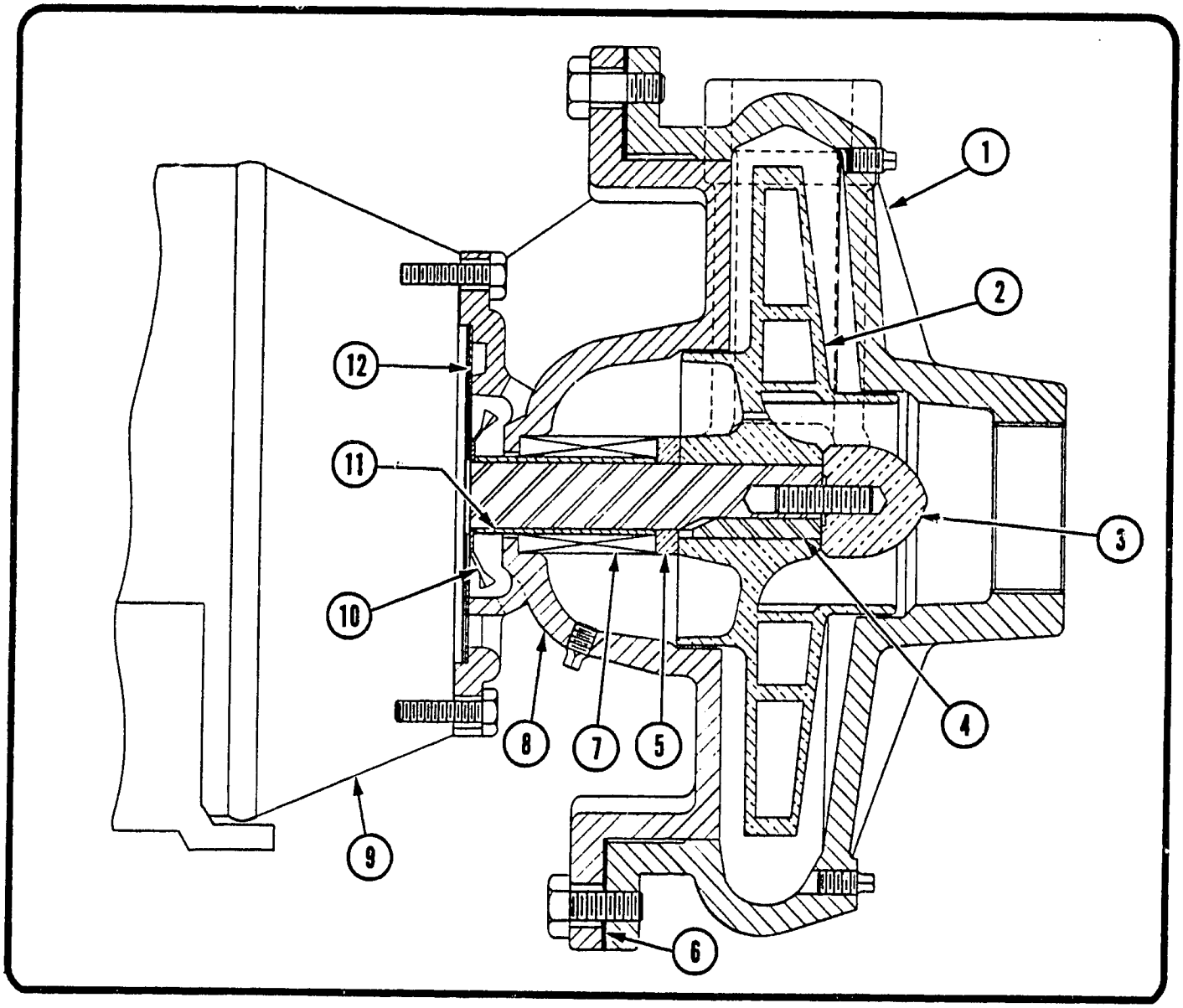

A9 PUMP AND PARTS LIST—½ HP, ¾ HP AND 1 HP

	PART	½ HP 1" 1ϕ & 3ϕ A9C1	¾ HP 1" 1ϕ & 3ϕ A9C1	¾ HP 1¼" 1ϕ & 3ϕ A9D1	1 HP 1" 1ϕ & 3ϕ A9C1	1 HP 1¼" 1ϕ & 3ϕ A9D1	1 HP 2" 1ϕ & 3ϕ A9D1
1	*CASE (CAST IRON) *CASE (BRONZE)	F541 D2-76	F541 D2-76	F540 D2-74	F541 D2-76	F540 D2-74	F544 D2-80
2	IMPELLER	C2-73x 6¼"	C2-73x 6¾"	E6181x 4 15/16"	C2-73x 7⅜"	E6181x 5 15/32"	E6188x 5⅜"
3	STUD & NUT ASSEMBLY	C10035 C8938	C10035 C8938	C10035 C8938	C10035 C8938	C10035 C8938	C10035 C8938
4	KEY	C10025	C10025	C10025	C10025	C10025	C10025
5	SEAL SPACER	C10060	C10060	C10060	C10060	C10060	C10060
6	GASKET	D5450	D5450	D5450	D5450	D5450	D5450
7	SHAFT SEAL	860	860	860	860	860	860
8	*HEAD (CAST IRON) *HEAD (BRONZE)	F539 D2-77	F539 D2-77	F539 D2-77	F539 D2-77	F539 D2-77	F539 D2-77
9	MOTOR	Contact Dunham-Bush, Inc., Marshalltown, Iowa					
10	SLINGER	C10037	C10037	C10037	C10037	C10037	C10037
11	SLEEVE	C10062	C10062	C10062	C10062	C10062	C10062
12	SHIELD	C8958	C8958	C8958	C8958	C8958	C8958

NOTE NON-STANDARD repair parts are not shown, when ordering furnish serial number. Complete ordering instructions are found on Page 1.

* When replacing item No. 8, head, before serial number 6605, item No. 1, case, must also be replaced.

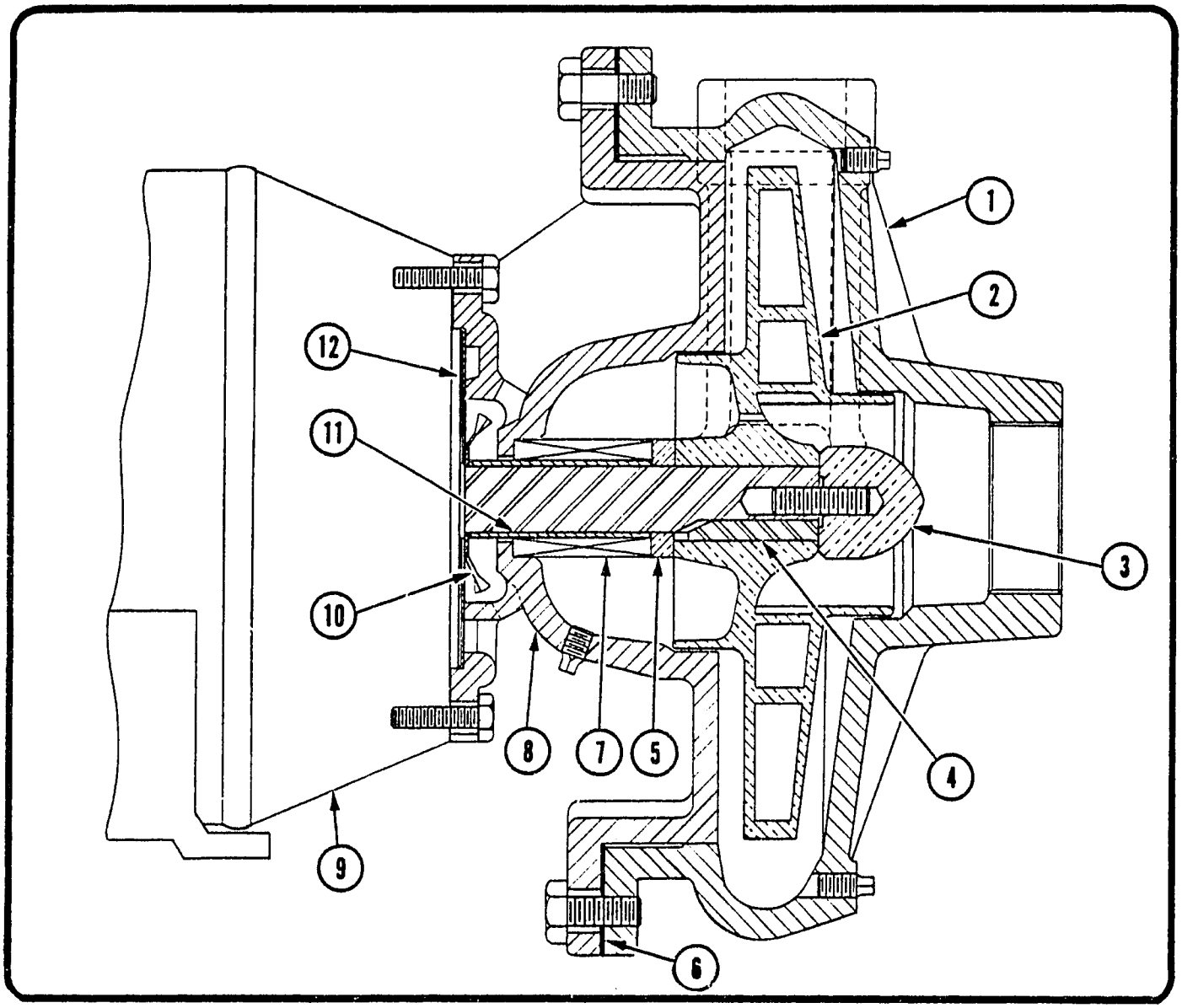

A9 PUMP AND PARTS LIST-1½ HP

	PART	1½ HP 1" 1φ & 3φ A9C1	1½ HP 1¼" 1φ & 3φ A9D1	1½ HP 2" 1φ & 3φ A9D1	1½ HP 2½" 1φ & 3φ A9E2	1½ HP 2½" 1φ & 3φ A9D1
1	*CASE (CAST IRON) *CASE (BRONZE)	F541 D2-76	F540 D2-74	F544 D2-80	F545 D2-79	F545 D2-79
2	IMPELLER	C2-73x 8 7/16"	E6181x 6 3/8"	E6188x 5 29/32"	E6184x 3 15/16"	E6204x 5 21/32"
3	STUD & NUT ASSEMBLY	C10035 C8938	C10035 C8938	C10035 C8938	C10035 C8938	C10035 C8938
4	KEY	C10025	C10025	C10025	C10025	C10025
5	SEAL SPACER	C10060	C10060	C10060	C10060	C10060
6	GASKET	D5450	D5450	D5450	D5450	D5450
7	SHAFT SEAL	860	860	860	860	860
8	*HEAD (CAST IRON) *HEAD (BRONZE)	F539 D2-77	F539 D2-77	F539 D2-77	F539 D2-77	F539 D2-77
9	MOTOR	Contact Dunham-Bush, Inc., Marshalltown, Iowa				
10	SLINGER	C10037	C10037	C10037	C10037	C10037
11	SLEEVE	C10062	C10062	C10062	C10062	C10062
12	SHIELD	C8958	C8958	C8958	C8958	C8958

NOTE: NON-STANDARD repair parts are not shown, when ordering furnish serial number. Complete ordering instructions are found on Page 1.

*When ordering case for 2½" A9E, also show A2-51 Adapter, which must be pressed in the case.

*When replacing item No. 8, head, before serial number 6605, item No. 1, case, must also be replaced.

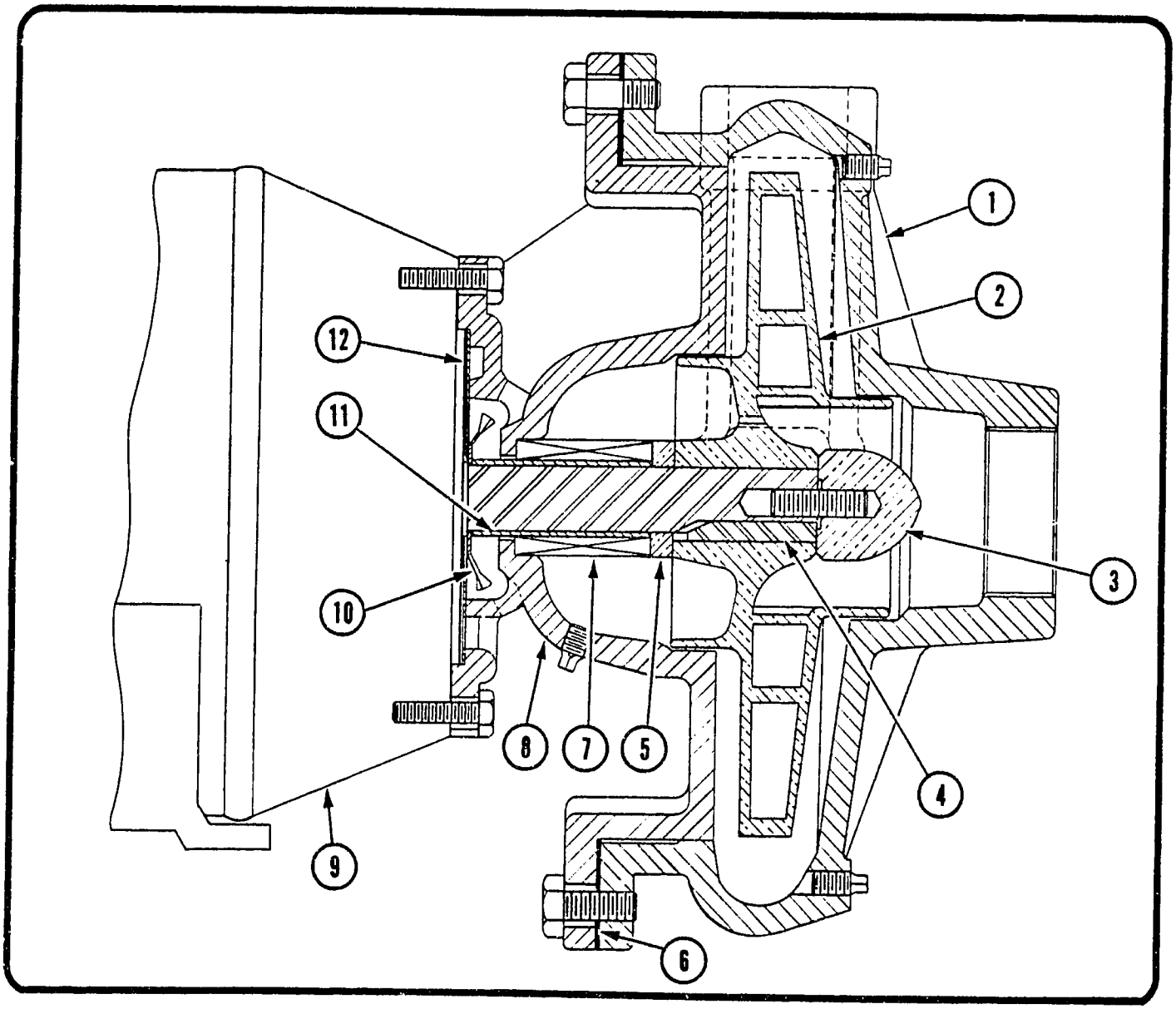

A9 PUMP AND PARTS LIST – 2 HP

PART	2 HP 1" 1ϕ A9C1	2 HP 1" 3ϕ A9C1	2 HP 1¼" 1ϕ A9D1	2 HP 1¼" 3ϕ A9D1
1 *CASE (CAST IRON) *CASE (BRONZE)	F541 D2-76	F541 D2-76	F540 D2-74	F540 D2-74
2 IMPELLER	C2-73x 9"	C2x73x 9"	E6181x 7¾"	E6181x 7¾"
3 STUD & NUT ASSEMBLY	C10035 C8938	C10035 C8938	C10035 C8938	C10035 C8938
4 KEY	C10025	C10025	C10025	C10025
5 SEAL SPACER	C10061	C10060	C10061	C10060
6 GASKET	D5450	D5450	D5450	D5450
7 SHAFT SEAL	861	860	861	860
8 *HEAD (CAST IRON) *HEAD (BRONZE)	F546 D2-77	F539 D2-77	F546 D2-78	F539 D2-77
9 MOTOR	Contact Dunham-Bush, Inc., Marshalltown, Iowa			
10 SLINGER	C10038	C10037	C10038	C10037
11 SLEEVE	C10063	C10062	C10063	C10062
12 SHIELD	D5478	C8958	D5478	C8958

NOTE: NON-STANDARD repair parts are not shown, when ordering furnish serial number. Complete ordering instructions are found on Page 1.

*When replacing Item No. 8, head, before serial number 6605, Item No. 1, case, must also be replaced.

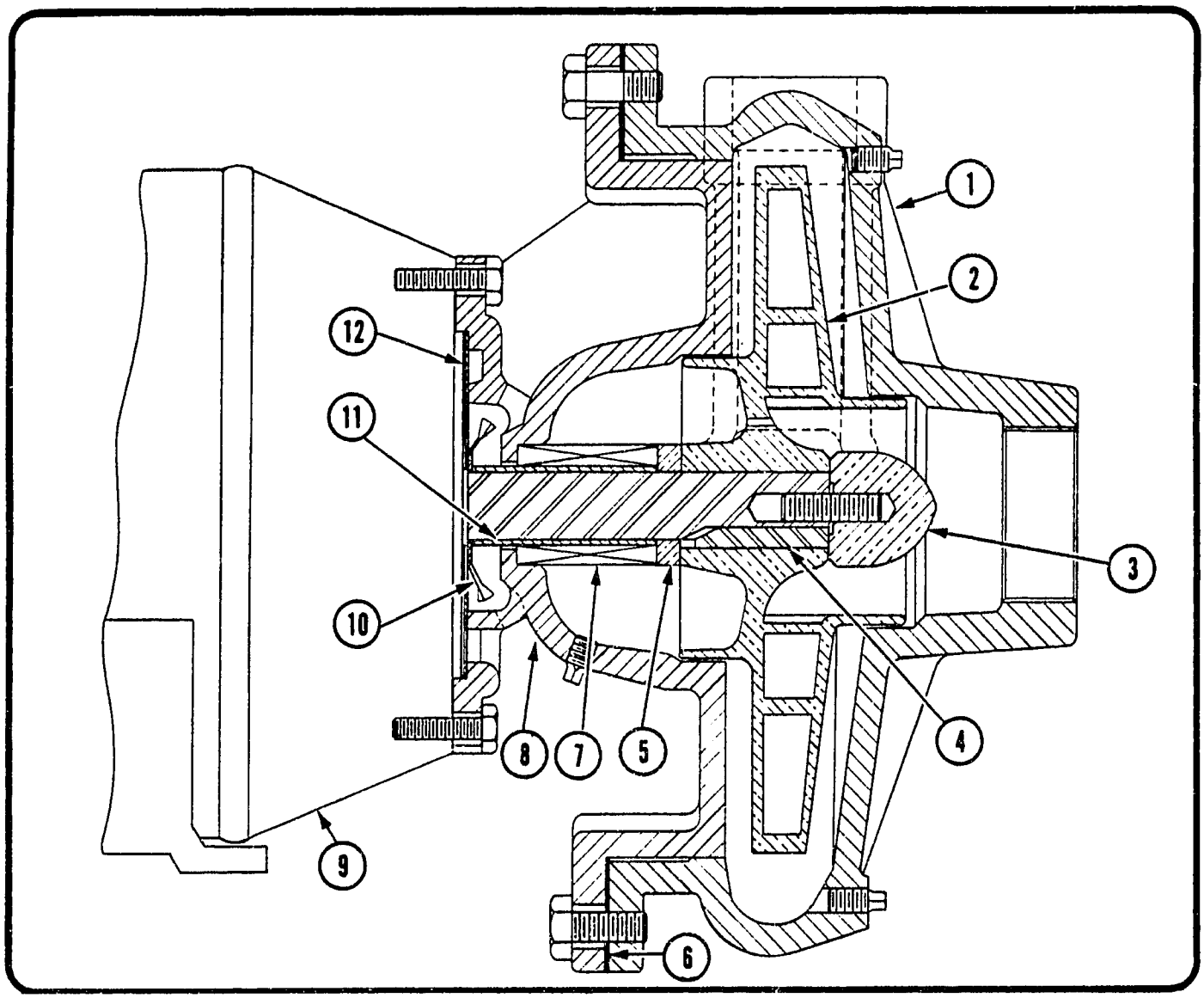

A9 PUMP AND PARTS LIST — 2 HP

	PART	2 HP 2" 1ϕ A9D1	2 HP 2" 3ϕ A9D1	2 HP 2½" 1ϕ A9D1	2 HP 2½" 3ϕ A9D1	2 HP 2½" 1ϕ & 3ϕ A9E2
1	*CASE (CAST IRON) *CASE (BRONZE)	F544 D2-80	F544 D2-80	F545 D2-79	F545 D2-79	F545 D2-79
2	IMPELLER	E6188x 6½"	E6188x 6½"	E6204x 6⅛"	E6204x 6⅛"	E6184x 3 15/16"
3	STUD & NUT ASSEMBLY	C10035 C8938	C10035 C8938	C10035 C8938	C10035 C8938	C10035 C8938
4	KEY	C10025	C10025	C10025	C10025	C10025
5	SEAL SPACER	C10061	C10060	C10061	C10060	C10060
6	GASKET	D5450	D5450	D5450	D5450	D5450
7	SHAFT SEAL	861	860	861	860	860
8	*HEAD (CAST IRON) *HEAD (BRONZE)	F546 D2-78	F539 D2-77	F546 D2-79	F539 D2-79	F539 D2-77
9	MOTOR	Contact Dunham-Bush, Inc., Marshalltown, Iowa				
10	SLINGER	C10038	C10037	C10038	C10037	C10037
11	SLEEVE	C10063	C10062	C10063	C10062	C10062
12	SHIELD	D5478	C8958	D5478	C8958	C8958

NOTE: NON-STANDARD repair parts are not shown, when ordering furnish serial number. Complete ordering instructions are found on Page 1.
*When ordering case for 2½" A9E, also show A2-51 Adapter, which must be pressed in the case.
When replacing item No. 8, head, before serial number 6605, item No. 1, case, must also be replaced.

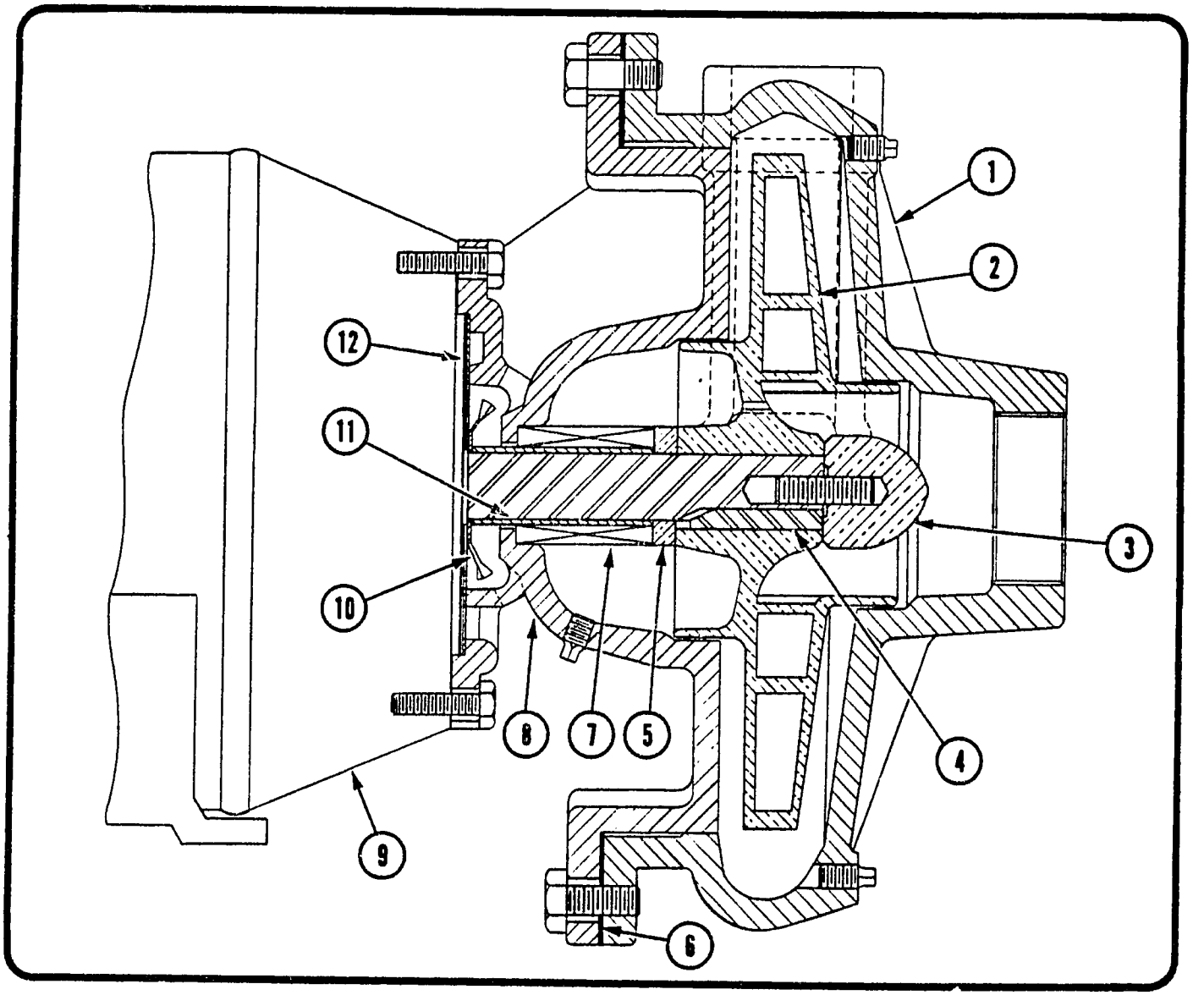

A9 PUMP AND PARTS LIST—3 HP

	PART	3 HP 1" 3ϕ A9D2	3 HP 1" 3ϕ A9C2	3 HP 1¼" 3ϕ A9D1	3 HP 1¼" 3ϕ A9D2	3 HP 2" 3ϕ A9E1	3 HP 2½" 3ϕ A9D1	3 HP 2½" 3ϕ A9E2
1	*CASE (CAST IRON) *CASE (BRONZE)	F541 D2-76	F541 D2-76	F540 D2-74	F540 D2-74	F544 D2-80	F545 D2-79	F545 D2-79
2	IMPELLER	E6141x 5¼"	C2-73x 6 1/16"	E6181x 8¼"	E6181x 4 7/16"	E6188x 7 1/16"	E6204x 6¾"	E6184x 4¼"
3	STUD & NUT ASSEMBLY	C10035 C8938	C10035 C8938	C10035 C8938	C10035 C8938	C10035 C8938	C10035 C8938	C10035 C8938
4	KEY	C10025	C10025	C10025	C10025	C10025	C10025	C10025
5	SEAL SPACER	C10060	C10060	C10061	C10060	C10061	C10061	C10060
6	GASKET	D5450	D5450	D5450	D5450	D5450	D5450	D5450
7	SHAFT SEAL	860	860	861	860	861	861	860
8	*HEAD (CAST IRON) *HEAD (BRONZE)	F539 D2-77	F539 D2-77	F546 D2-78	F539 D2-77	F546 D2-78	F546 D2-78	F539 D2-77
9	MOTOR	Contact Dunham-Bush, Inc., Marshalltown, Iowa						
10	SLINGER	C10037	C10037	C10038	C10037	C10038	C10038	C10037
11	SLEEVE	C10062	C10062	C10063	C10062	C10063	C10063	C10062
12	SHIELD	C8958	C8958	D5478	C8958	D5478	D5478	C8958

NOTE: NON-STANDARD repair parts are not shown, when ordering furnish serial number. Complete ordering instructions are found on Page 1.
*When replacing item No. 8, head, before serial number 6605, item No. 1, case, must also be replaced.

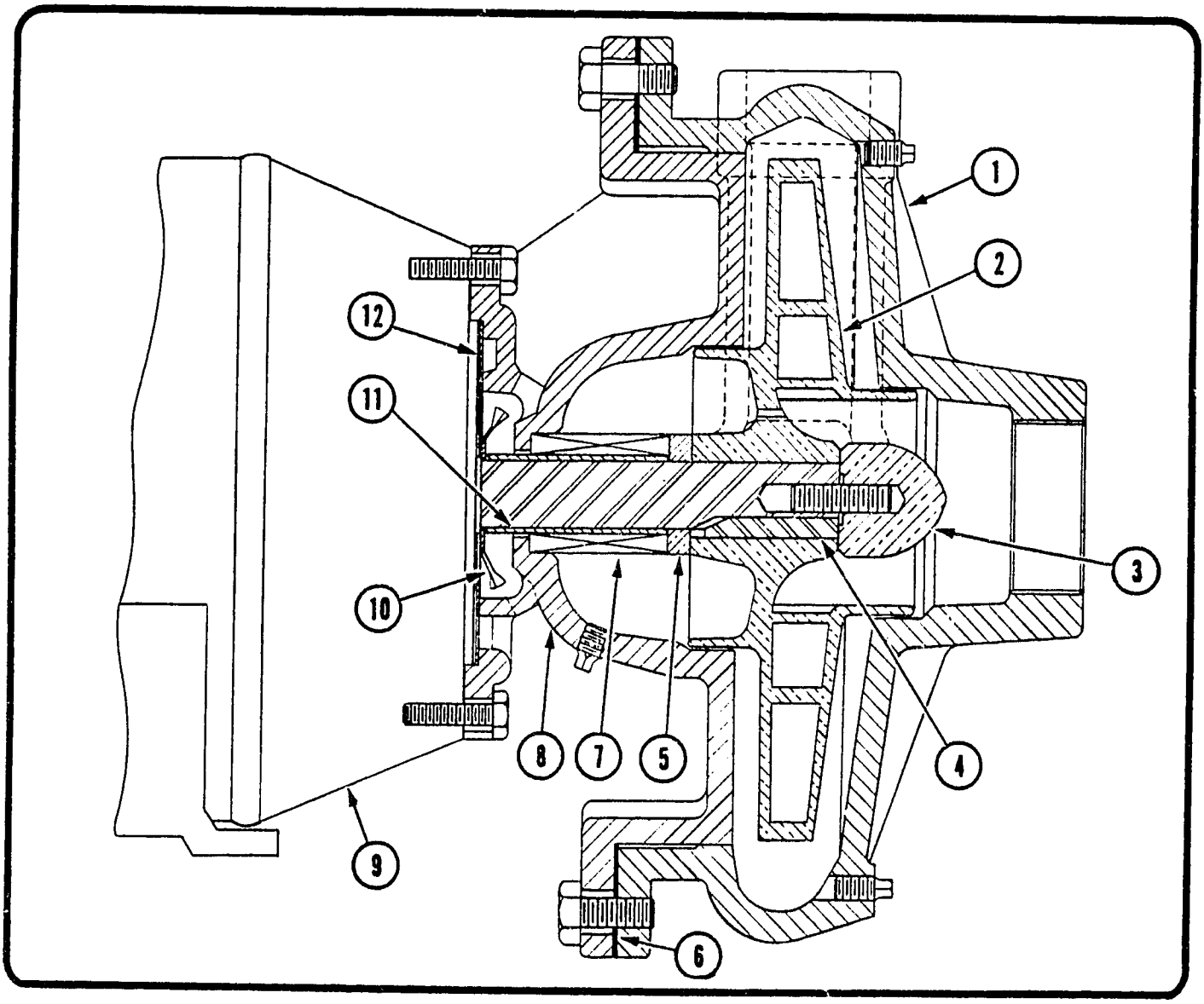

A9 PUMP AND PARTS LIST – 5 HP

PART	5 HP 1" 3ϕ A9C2	5 HP 1" 3ϕ A9D2	5 HP 1¼" 3ϕ A9D2	5 HP 2" 3ϕ A9D1	5 HP 2" 3ϕ A9D2	5 HP 2½" 3ϕ A9D1	5 HP 2½" 3ϕ A9D2
1 *CASE (CAST IRON) *CASE (BRONZE)	F541 D2-76	F541 D2-76	F540 D2-74	F544 D2-80	F544 D2-80	F545 D2-79	F545 D2-79
2 IMPELLER	C2-73x 6⅝"	E6141x 5⅞"	E6181x 5 15/32"	E6188x 8⅞"	E6188x 4 15/16"	E6204x 7 15/16"	E6204x 4¾"
3 STUD & NUT ASSEMBLY	C10035 C8938	C10035 C8938	C10035 C8938	C10035 C8938	C10035 C8938	C10035 C8938	C10035 A2-672
4 KEY	C10025	C10025	C10025	C10025	C10025	C10025	C10025
5 SEAL SPACER	C10061	C10061	C10061	C10061	C10061	C10061	C10061
6 GASKET	D5450	D5450	D5450	D5450	D5450	D5450	D5450
7 SHAFT SEAL	861	861	861	861	861	861	861
8 *HEAD (CAST IRON) *HEAD (BRONZE)	F546 D2-78	F546 D2-78	F546 D2-78	F546 D2-78	F546 D2-78	F546 D2-78	F546 D2-78
9 MOTOR	Contact Dunham-Bush, Inc., Marshalltown, Iowa						
10 SLINGER	C10038	C10038	C10038	C10038	C10038	C10038	C10038
11 SLEEVE	C10063	C10063	C10063	C10063	C10063	C10063	C10063
12 SHIELD	D5478	D5478	D5478	D5478	D5478	D5478	D5478

NOTE: NON-STANDARD repair parts are not shown, when ordering furnish serial number. Complete ordering instructions are found on Page 1.

When replacing item No. 8, head, before serial number 6605, item No. 1, case, must also be replaced.

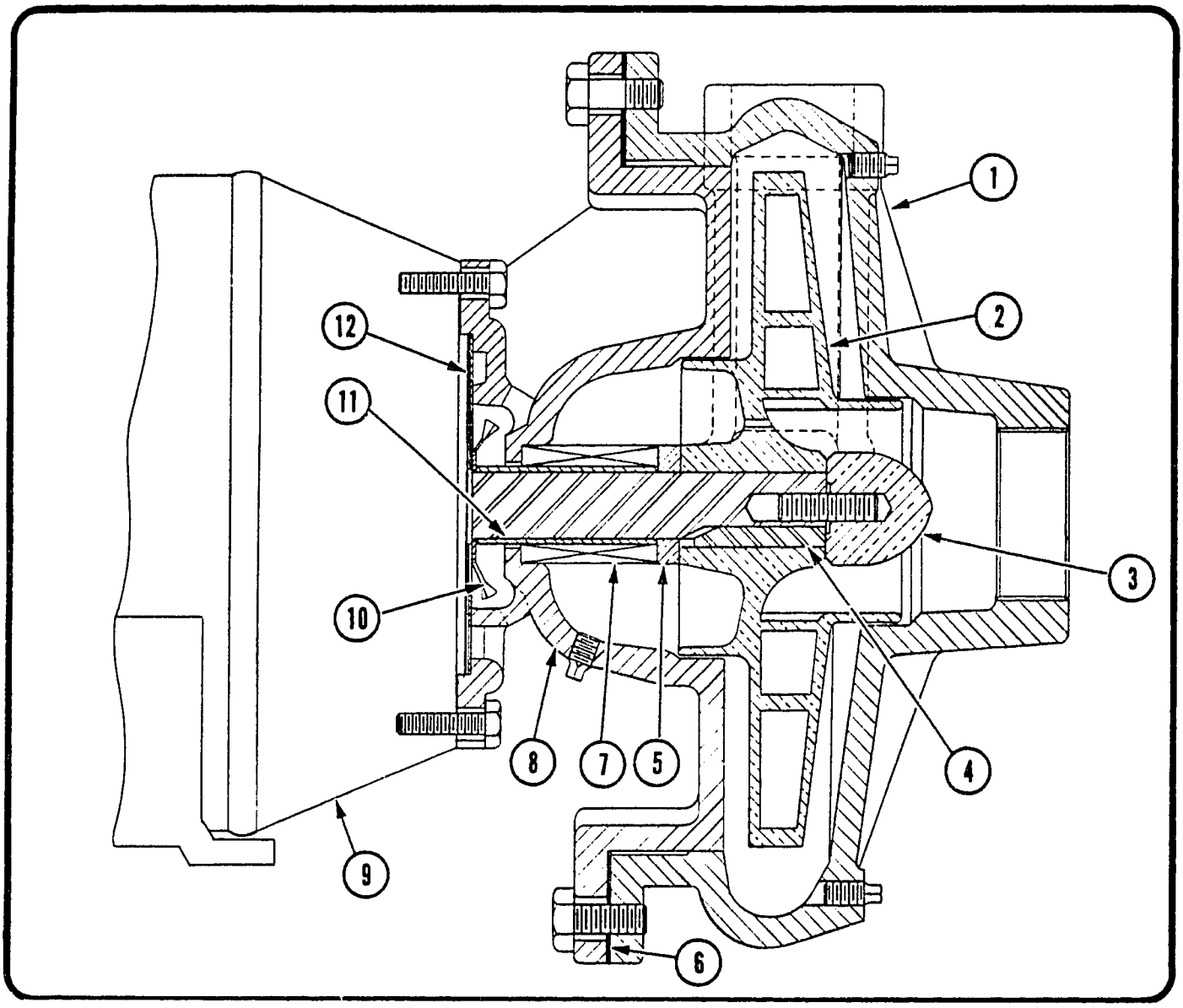

A9 PUMP AND PARTS LIST - 7½ HP

	PART	7½ HP 1¼" 3ϕ A9D2	7½ HP 2" 3ϕ A9D2	7½ HP 2½" 3ϕ A9D1	7½ HP 2½" 3ϕ A9D2
1	*CASE (CAST IRON) *CASE (BRONZE)	F540 D2-74	F544 D2-80	F545 D2-79	F545 D2-79
2	IMPELLER	E6181x 5 15/16"	E6188x 5 9/16"	E6204x 9"	E6204x 5 9/16"
3	STUD & NUT ASSEMBLY	C10035 C8938	C10035 A2-672	C10035 C8938	C10035 A2-672
4	KEY	C10025	C10025	C10025	C10025
5	SEAL SPACER	C10061	C10061	C10061	C10061
6	GASKET	D5450	D5450	D5450	D5450
7	SHAFT SEAL	861	861	861	861
8	*HEAD (CAST IRON) *HEAD (BRONZE)	F546 D2-78	F546 D2-78	F546 D2-78	F546 D2-78
9	MOTOR	Contact Dunham-Bush, Inc., Marshalltown, Iowa			
10	SLINGER	C10038	C10038	C10038	C10038
11	SLEEVE	C10063	C10063	C10063	C10063
12	SHIELD	D5478	D5478	D5478	D5478

NOTE: NON-STANDARD repair parts are not shown, when ordering furnish serial number. Complete ordering instructions are found on Page 1.

*When replacing item No. 8, head, before serial number 6605, item No. 1, case, must also be replaced.

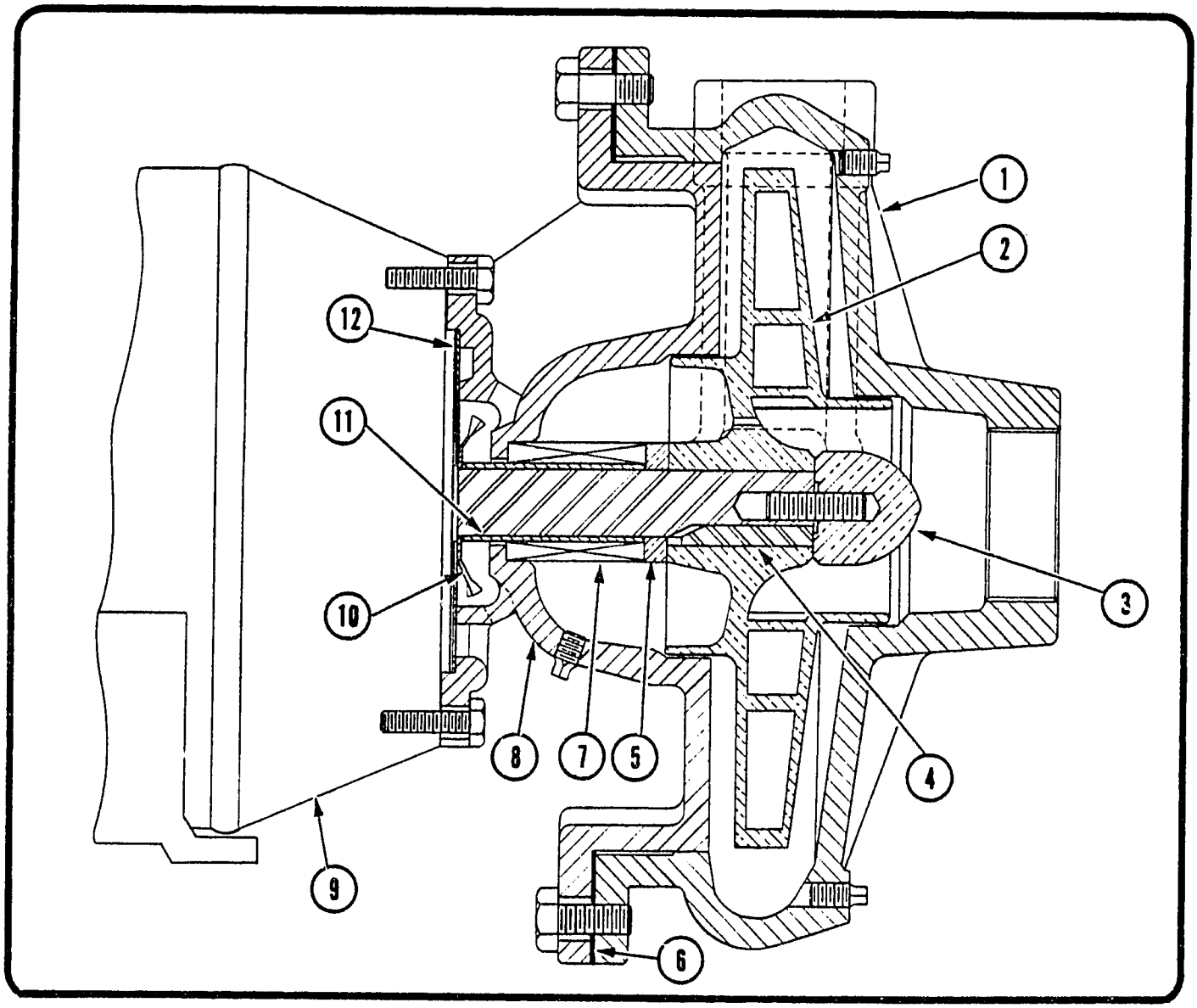

A9 PUMP AND PARTS LIST – 10 HP AND 15 HP

	PART	10 HP 1¼" 3ϕ A9D2	10 HP 2" 3ϕ A9D2	10 HP 2½" 3ϕ A9D2	15 HP 2" 3ϕ A9D2
1	*CASE (CAST IRON) *CASE (BRONZE)	F540 D2-74	F544 D2-80	F545 D2-79	F544 D2-80
2	IMPELLER	E6181x 6⅜"	E6188x 5²⁹⁄₃₂"	E6204x 5²¹⁄₃₂"	E6188x 6⁵⁄₁₆"
3	STUD & NUT ASSEMBLY	C10035 C8938	C10035 A2-672	C10035 A2-672	C10035 A2-672
4	KEY	C10025	C10025	C10025	C10025
5	SEAL SPACER	C10061	C10061	C10061	C10061
6	GASKET	D5450	D5450	D5450	D5450
7	SHAFT SEAL	861	861	861	861
8	*HEAD (CAST IRON) *HEAD (BRONZE)	F546 D2-78	F546 D2-78	F546 D2-78	F546 D2-78
9	MOTOR	Contact Dunham-Bush, Inc., Marshalltown, Iowa			
10	SLINGER	C10038	C10038	C10038	C10038
11	SLEEVE	C10063	C10063	C10063	C10063
12	SHIELD	D5478	D5478	D5478	D5478

NOTE: NON-STANDARD repair parts are not shown, when ordering furnish serial number. Complete ordering instructions are found on Page 1.
*When replacing item No. 8, head, before serial number 6605, item No. 1, case, must also be replaced.

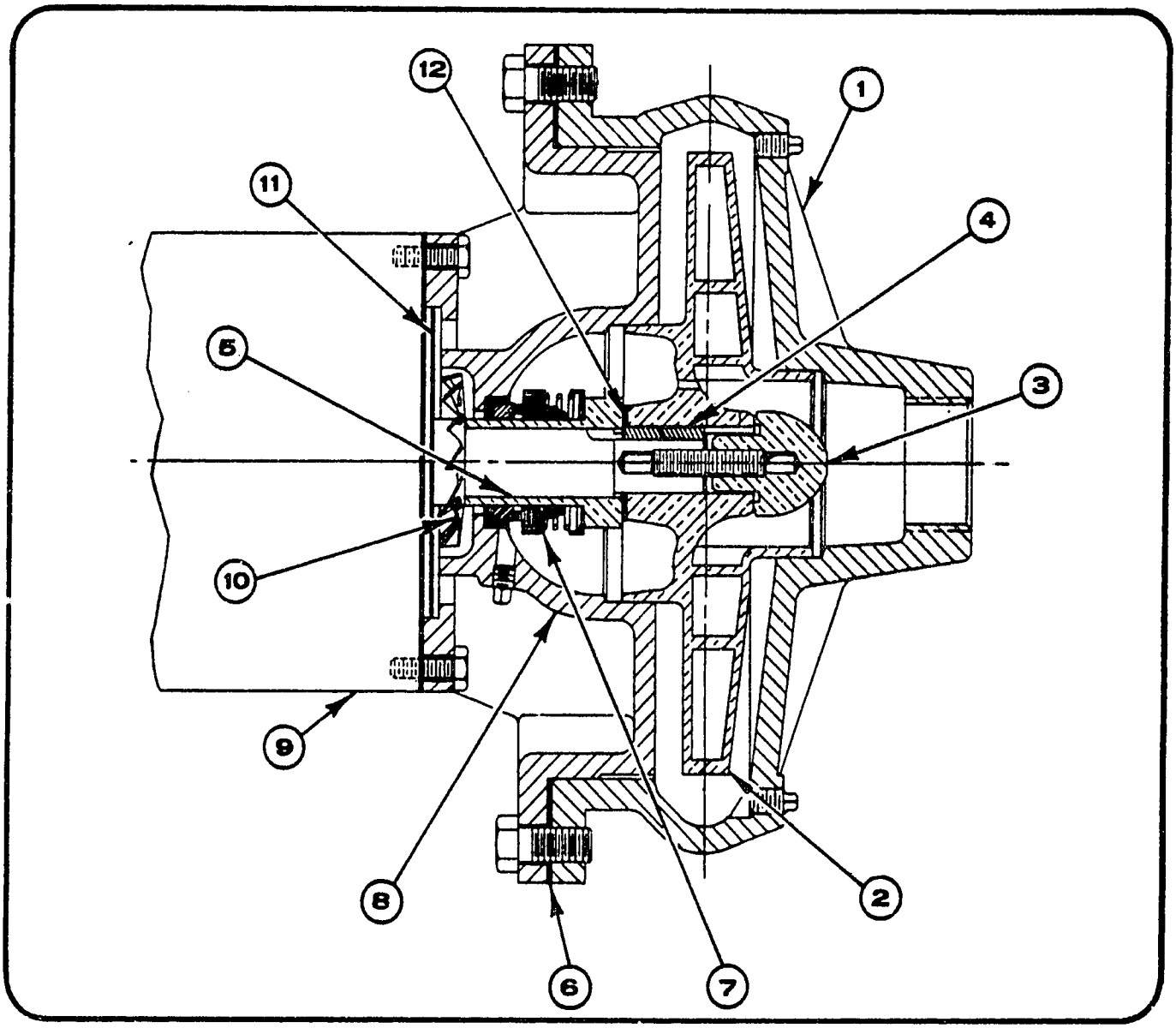

A9 PUMP AND PARTS LIST
SERIES A - ½ HP, ¾ HP AND 1 HP

	PART NUMBER AND DESCRIPTION	½ HP 1" 1ϕ & 3ϕ A9C1A	¾ HP 1" 1ϕ & 3ϕ A9C1A	¾ HP 1¼" 1ϕ & 3ϕ A9D1A	1 HP 1" 1ϕ & 3ϕ A9C1A	1 HP 1¼" 1ϕ & 3ϕ A9D1A	1 HP 2" 1ϕ & 3ϕ A9D1A
1	CASE (CAST IRON) CASE (BRONZE)	F541 D2-76	F541 D2-76	F540 D2-74	F541 D2-76	F540 D2-74	F544 D2-80
2	IMPELLER (BRONZE)	C2-3211X 6 1/16"	C2-3211X 6 3/4"	C2-3213X 4 15/16"	C2-3211X 7 5/16"	C2-3213X 5 15/16"	C2-3214X 5 3/8
3	STUD & NUT ASSEMBLY	C10035 A2-3898	C10035 A2-3898	C10035 A2-3898	C10035 A2-3898	C10035 A2-3898	C10035 A2-3898
4	KEY	C7763	C7763	C7763	C7763	C7763	C7763
5	SLEEVE *	A2-3905	A2-3905	A2-3905	A2-3905	A2-3905	A2-3905
6	GASKET *	D5450	D5450	D5450	D5450	D5450	D5450
7	SHAFT SEAL *	3179	3179	3179	3179	3179	3179
8	HEAD (CAST IRON) HEAD (BRONZE)	D2-1478 D2-1480	D2-1478 D2-1480	D2-1478 D2-1480	D2-1478 D2-1480	D2-1478 D2-1480	D2-1478 D2-1480
9	MOTOR	Contact Dunham-Bush, Inc., Marshalltown, Iowa					
10	SLINGER	C10038	C10038	C10038	C10038	C10038	C10038
11	SHIELD	C8958	C8958	C8958	C8958	C8958	C8958
12	GASKET *	A2-3020	A2-3020	A2-3020	A2-3020	A2-3020	A2-3020

NOTES: 1. NON-STANDARD pump parts are not shown. When ordering repair parts, refer to page 1 of this catalog.
2. * = These parts are required when replacing shaft seal.

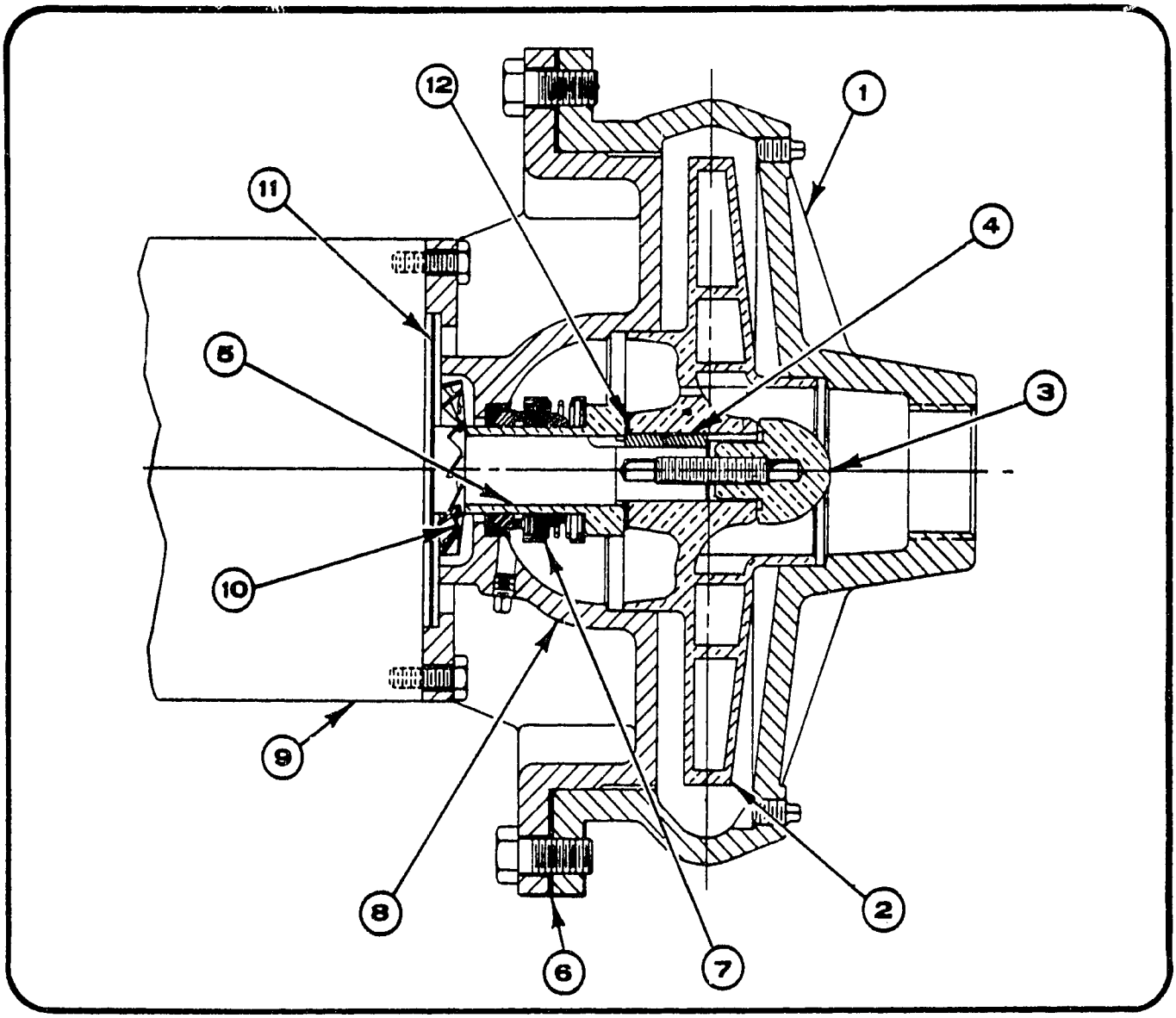

A9 PUMP AND PARTS LIST
SERIES A – 1½ HP

PART NUMBER AND DESCRIPTION	1½ HP 1" 1ϕ & 3ϕ A9C1A	1½ HP 1¼" 1ϕ & 3ϕ A9D1A	1½ HP 2" 1ϕ & 3ϕ A9D1A	1½ HP 2½" 1ϕ & 3ϕ A9D1A
1 CASE (CAST IRON) CASE (BRONZE)	D541 D2-76	F540 D2-74	F544 D2-80	F545 D2-79
2 IMPELLER (BRONZE)	C2-3211X $8^{7}/_{16}$"	C2-3213X $6^{3}/_{8}$"	C2-3214X $5^{29}/_{32}$"	C2-3215X $5^{21}/_{33}$"
3 STUD & NUT ASSEMBLY	C10035 A2-3898	C10035 A2-3898	C10035 A2-3898	C10035 A2-3898
4 KEY	C7763	C7763	C7763	C7763
5 SLEEVE *	A2-3905	A2-3905	A2-3905	A2-3905
6 GASKET *	D5450	D5450	D5450	D5450
7 SHAFT SEAL *	3179	3179	3179	3179
8 HEAD (CAST IRON) HEAD (BRONZE)	D2-1478 D2-1480	D2-1478 D2-1480	D2-1478 D2-1479	D2-1478 D2-1480
9 MOTOR	Contact Dunham-Bush, Inc., Marshalltown, Iowa			
10 SLINGER	C10038	C10038	C10038	C10038
11 SHIELD	C8958	C8958	C8958	C8958
12 GASKET *	A2-3020	A2-3020	A2-3020	A2-3020

NOTES: 1. NON-STANDARD pump parts are not shown. When ordering repair parts, refer to page 1 of this catalog.
2. * = These parts are required when replacing shaft seal.

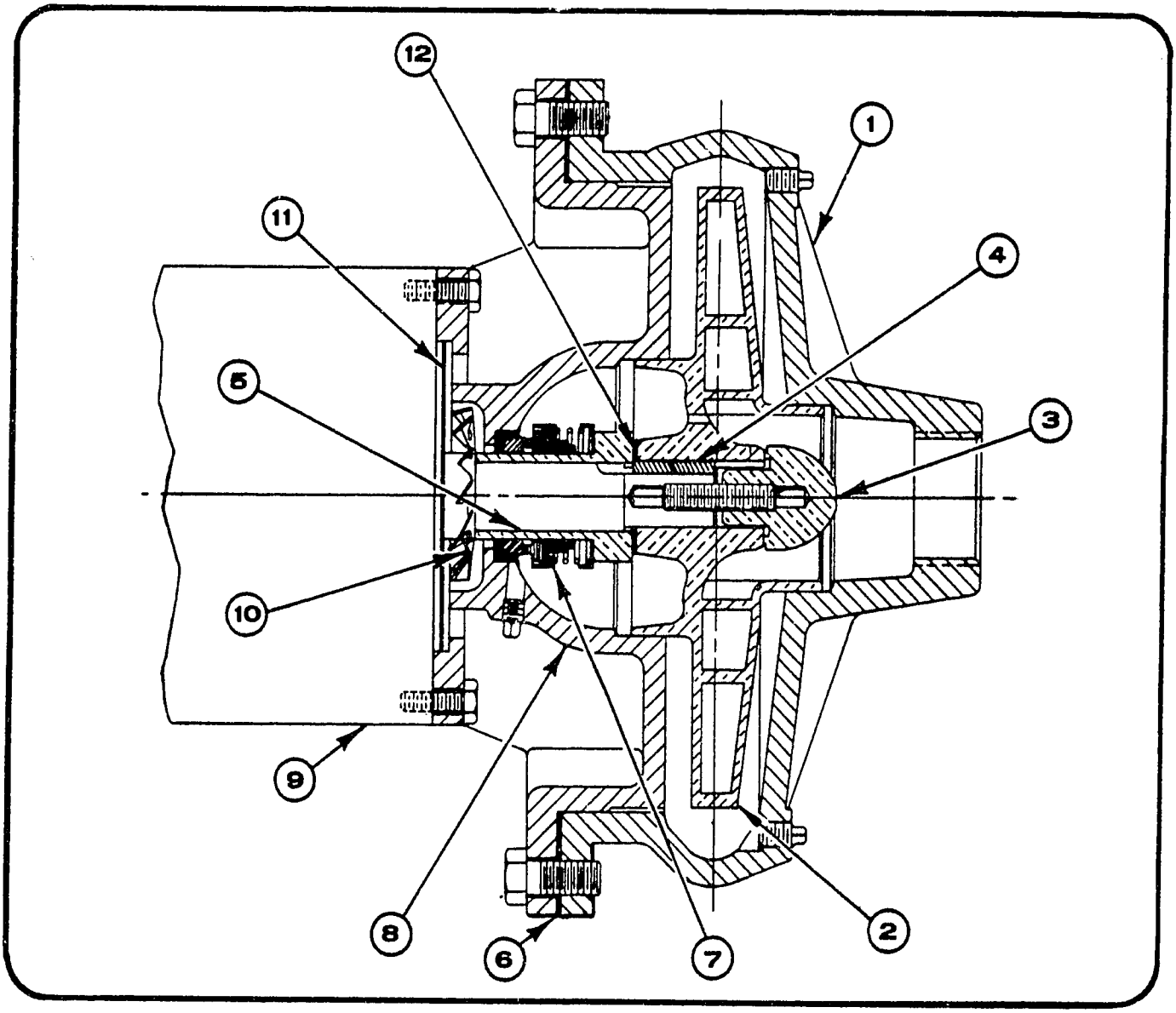

A9 PUMP AND PARTS LIST
SERIES A - 2 HP

PART NUMBER AND DESCRIPTION	2 HP 1" 1ϕ A9C1A	2 HP 1" 3ϕ A9C1A	2 HP 1¼" 1ϕ A9D1A	2 HP 1¼" 3ϕ A9D1A	2 HP 2" 1ϕ D9D1A	2 HP 2" 3ϕ A9D1A	2 HP 2½" 1ϕ A9D1A	2 HP 2½" 3ϕ A9D1A
1 CASE (CAST IRON) CASE (BRONZE)	F541 D2-76	F541 D2-76	F540 D2-74	F540 D2-74	F544 D2-80	F544 D2-80	F545 D2-79	F545 D2-79
2 IMPELLER (BRONZE)	C2-3211X 9"	C2-3211X 9"	C2-3213X $7^3/_{16}$"	C2-3213X $7^3/_{16}$"	C2-3214X $6^1/_2$"	C2-3214X $6^1/_2$"	C2-3215X $6^1/_8$"	C2-3215X $6^1/_8$"
3 STUD & NUT ASSEMBLY	C10035 A2-3898	C10035 A2-3898	C10035 A2-3898	C10035 A2-3898	C10035 A2-3898	C10035 A2-3898	C10035 A2-3898	C10035 A2-3898
4 KEY	C7763	C7763	C7763	C7763	C7763	C7763	C7763	C7763
5 SLEEVE *	A2-3905	A2-3905	A2-3905	A2-3905	A2-3905	A2-3905	A2-3905	A2-3905
6 GASKET *	D5450	D5450	D5450	D5450	D5450	D5450	D5450	D5450
7 SHAFT SEAL *	3179	3179	3179	3179	3179	3179	3179	3179
8 HEAD (CAST IRON) HEAD (BRONZE)	D2-1478 D2-1480	D2-1478 D2-1480	D2-1478 D2-1480	D2-1478 D2-1480	D2-1478 D2-1480	D2-1478 D2-1480	D2-1478 D2-1480	D2-1478 D2-1480
9 MOTOR	Contact Dunham-Bush, Inc., Marshalltown, Iowa							
10 SLINGER	C10038	C10038	C10038	C10038	C10038	C10038	C10038	C10038
11 SHIELD	C8958	C8958	C8958	C8958	C8958	C8958	C8958	C8958
12 GASKET *	A2-3020	A2-3020	A2-3020	A2-3020	A2-3020	A2-3020	A2-3020	A2-3020

NOTES: 1. NON-STANDARD pump parts are not shown. When ordering repair parts, refer to page 1 of this catalog.
2. * = These parts are required when replacing shaft seal.

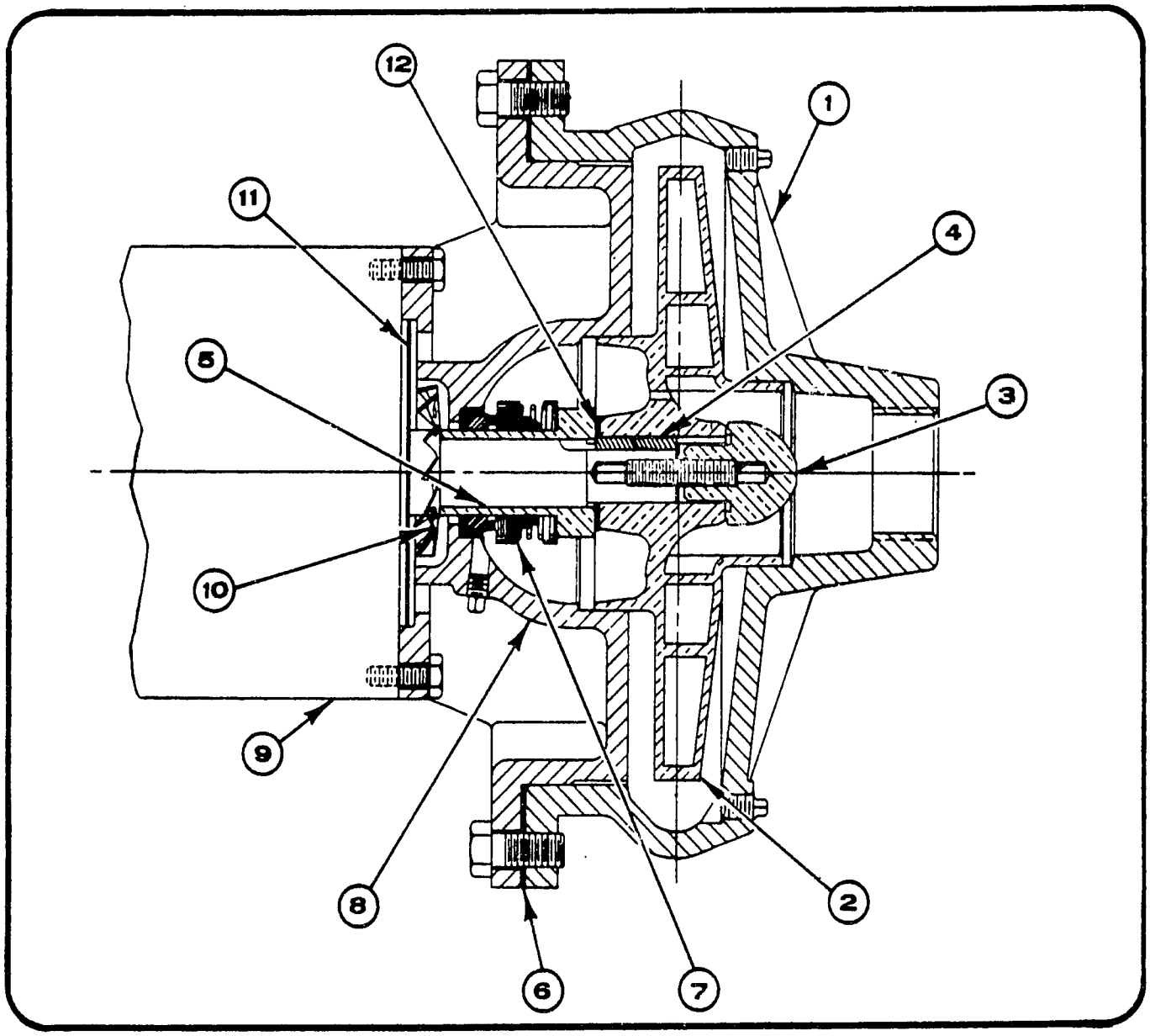

A9 PUMP AND PARTS LIST SERIES A - 3 HP

PART NUMBER AND DESCRIPTION	3 HP 1" 3ϕ A9D2A	3 HP 1" 3ϕ A9C2A	3 HP 1¼" 3ϕ A9D1A	3 HP 1¼" 3ϕ A9D2A	3 HP 2" 3ϕ A9D1A	3 HP 2½" 3ϕ A9D1A
1 CASE (CAST IRON) CASE (BRONZE)	F541 D2-76	F541 D2-76	F540 D2-74	F540 D2-74	F544 D2-80	F545 D2-79
2 IMPELLER (BRONZE)	C2-3212X 5¼"	C2-3211X 6 1/16"	C2-3213X 8¼"	C2-3213X 4 7/16"	C2-3214X 7 1/16"	C2-3215X 6¾"
3 STUD & NUT ASSEMBLY	C10035 A2-3898	C10035 A2-3898	C10035 A2-3898	C10035 A2-3898	C10035 A2-3898	C10035 A2-3898
4 KEY	C7763	C7763	C7763	C7763	C7763	C7763
5 SLEEVE *	A2-3905	A2-3905	A2-3905	A2-3905	A2-3905	A2-3905
6 GASKET *	D5450	D5450	D5450	D5450	D5450	D5450
7 SHAFT SEAL *	3179	3179	3179	3179	3179	3179
8 HEAD (CAST IRON) HEAD (BRONZE)	D2-1478 D2-1480	D2-1478 D2-1480	D2-1478 D2-1480	D2-1478 D2-1480	D2-1478 D2-1480	D2-1478 D2-1480
9 MOTOR	Contact Dunham-Bush, Inc., Marshalltown, Iowa					
10 SLINGER	C10038	C10038	C10038	C10038	C10038	C10038
11 SHIELD	C8958	C8958	C8958	C8958	C8958	C8958
12 GASKET *	A2-3020	A2-3020	A2-3020	A2-3020	A2-3020	A2-3020

NOTES: 1. NON-STANDARD pump parts are not shown. When ordering repair parts, refer to page 1 of this catalog.
2. * = These parts are required when replacing shaft seal.

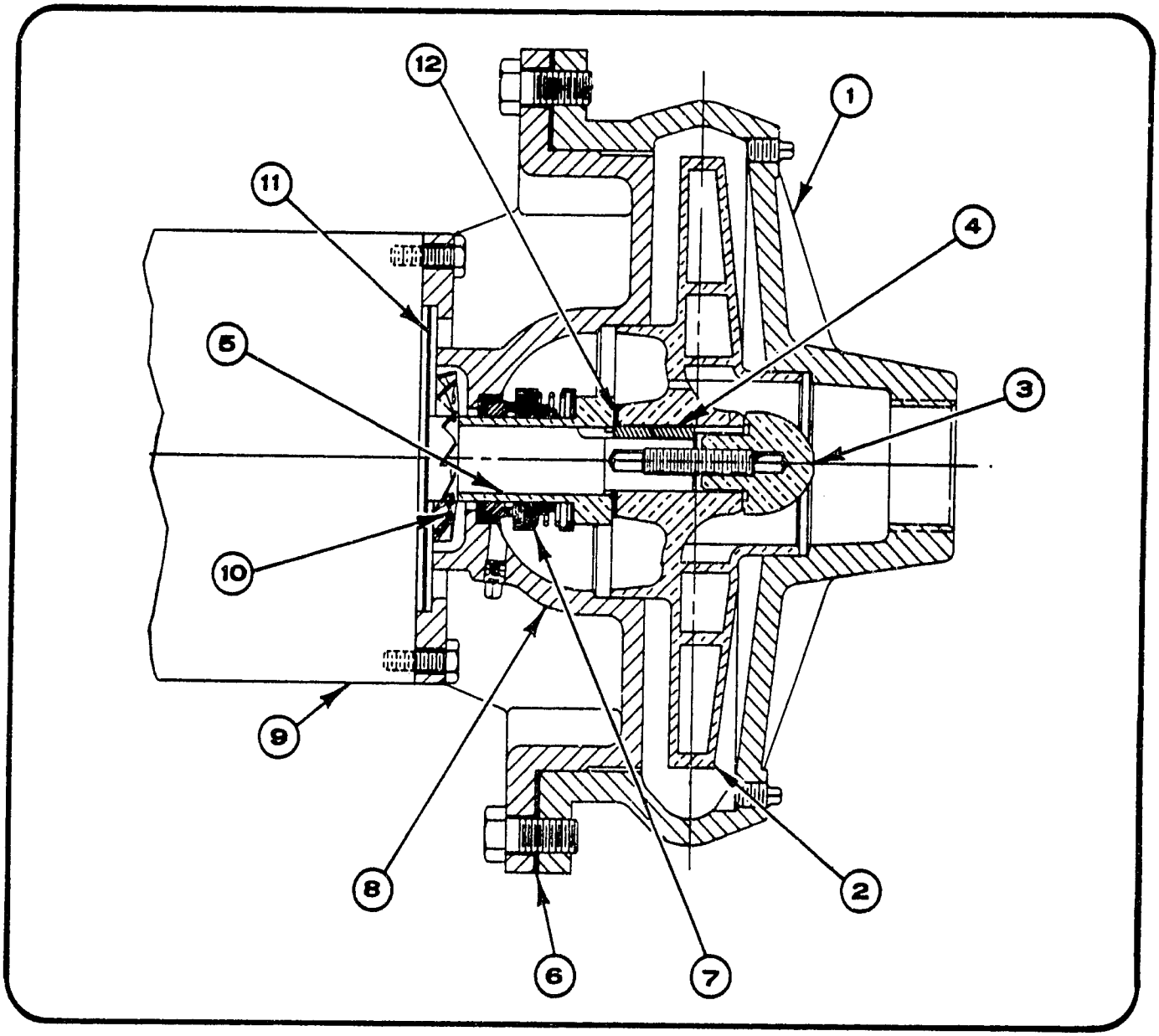

A9 PUMP AND PARTS LIST SERIES A - 5 HP

PART NUMBER AND DESCRIPTION	5 HP 1" 3ϕ A9C2A	5 HP 1" 3ϕ A9D2A	5 HP 1¼" 3ϕ A9D2A	5 HP 2" 3ϕ A9D1A	5 HP 2" 3ϕ A9D2A	5 HP 2½" 3ϕ A9D1A	5 HP 2½" 3ϕ A9D2A
1 CASE (CAST IRON) CASE (BRONZE)	F541 D2-76	F541 D2-76	F540 D2-74	F544 D2-80	F544 D2-80	F545 D2-79	F545 D2-79
2 IMPELLER (BRONZE)	C2-3211X $6^{9}/_{16}$"	C2-3212X $5^{7}/_{8}$"	C2-3213X $5^{15}/_{32}$"	C2-3214X $8^{7}/_{16}$"	C2-3214X $4^{15}/_{16}$"	C2-3215X $7^{15}/_{16}$"	C2-3215X $4^{3}/_{4}$"
3 STUD & NUT ASSEMBLY	C10035 A2-3898	C10035 A2-3898	C10035 A2-3898	C10035 A2-3899	C10035 A2-3899	C10035 A2-3899	C10035 A2-3899
4 KEY	C7763	C7763	C7763	C7763	C7763	C7763	C7763
5 SLEEVE *	A2-3905	A2-3905	A2-3905	A2-3905	A2-3905	A2-3905	A2-3905
6 GASKET *	D5450	D5450	D5450	D5450	D5450	D5450	D5450
7 SHAFT SEAL*	3179	3179	3179	3179	3179	3179	3179
8 HEAD (CAST IRON) HEAD (BRONZE)	D2-1478 D2-1480	D2-1478 D2-1480	D2-1478 D2-1480	D2-1478 D2-1480	D2-1478 D2-1480	D2-1478 D2-1480	D2-1478 D2-1480
9 MOTOR	Contact Dunham-Bush, Inc., Marshalltown, Iowa						
10 SLINGER	C10038	C10038	C10038	C10038	C10038	C10038	C10038
11 SHIELD	C8958	C8958	C8958	C8958	C8958	C8958	C8958
12 GASKET *	A2-3020	A2-3020	A2-3020	A2-3020	A2-3020	A2-3020	A2-3020

NOTES: 1. NON-STANDARD pump parts are not shown. When ordering repair parts, re[illegible] page 1 of this catalog.
2. * = These parts are required when replacing shaft seal.

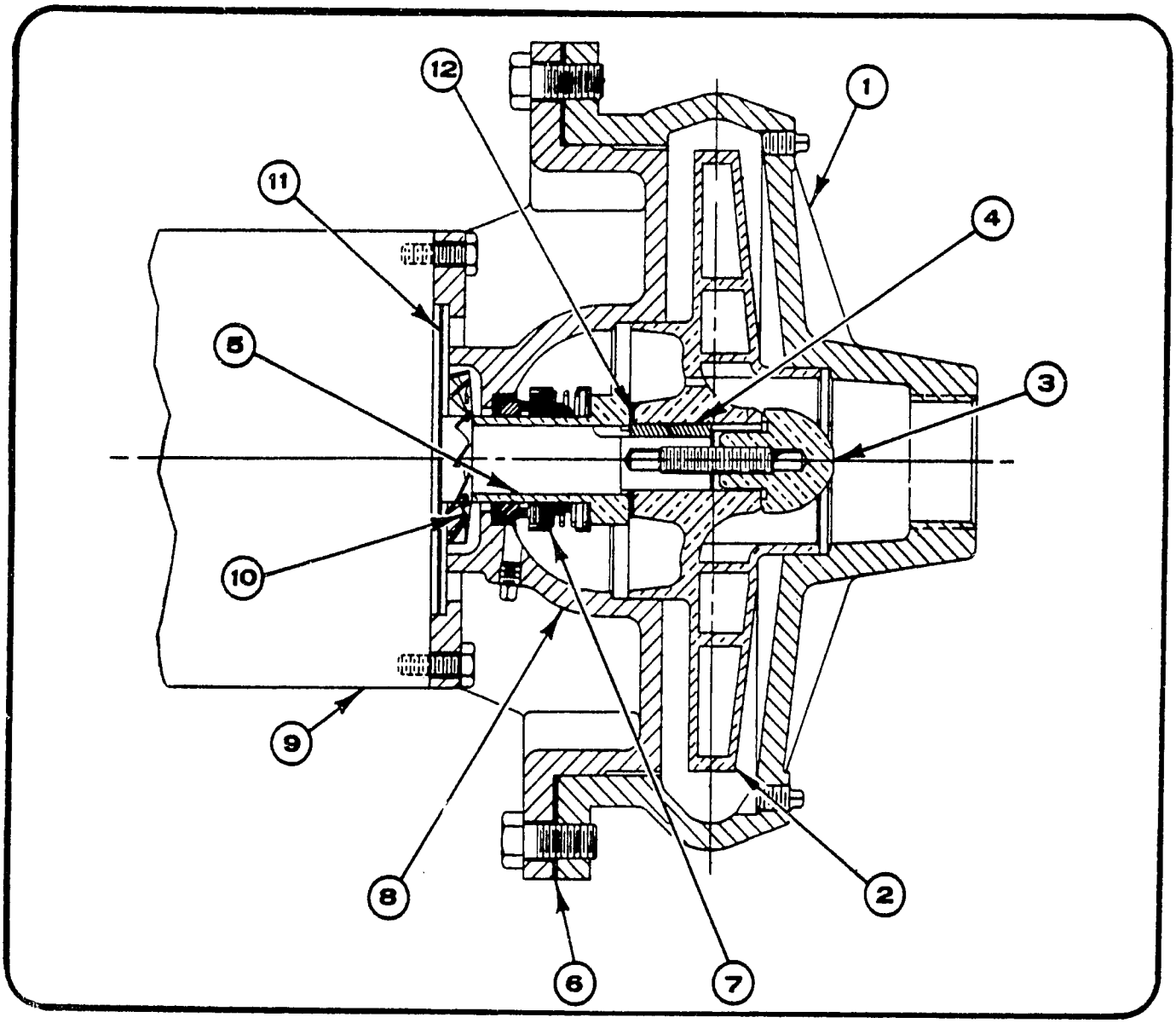

A9 PUMP AND PARTS LIST
SERIES A - 7½ HP

PART NUMBER AND DESCRIPTION		7½ HP 1¼" 3ϕ A9D2A	7½ HP 2" 3ϕ A9D2A	7½ HP 2½" 3ϕ A9D1A	7½ HP 2½" 3ϕ A9D1A
1	CASE (CAST IRON) CASE (BRONZE)	F540 D2-74	F544 D2-80	F545 D2-79	F545 D2-79
2	IMPELLER (BRONZE)	C2-3213X 5 15/16"	C2-3214X 5 9/16"	C2-3215X 9"	C2-3215X 5 5/16"
3	STUD & NUT ASSEMBLY	C10035 A2-3899	C10035 A2-3899	C10035 A2-3899	C10035 A2-3899
4	KEY	C7763	C7763	C7763	C7763
5	SLEEVE *	A2-3905	A2-3905	A2-3905	A2-3905
6	GASKET *	D5450	D5450	D5450	D5450
7	SHAFT SEAL*	3179	3179	3179	3179
3	HEAD (CAST IRON) HEAD (BRONZE)	D2-1478 D2-1480	D2-1478 D2-1480	D2-1481 D2-1483	D2-1478 D2-1480
9	MOTOR	Contact Dunham-Bush, Inc., Marshalltown, Iowa			
10	SLINGER	C1038	C1038	C1038	C1038
11	SHIELD	C8958	C8958	D5478	C8958
12	GASKET *	A2-3020	A2-3020	A2-3020	A2-3020

NOTES:
1. NON-STANDARD pump parts are not shown. When ordering repair parts, refer to page 1 of this catalog.
2. * = These parts are required when replacing shaft seal.

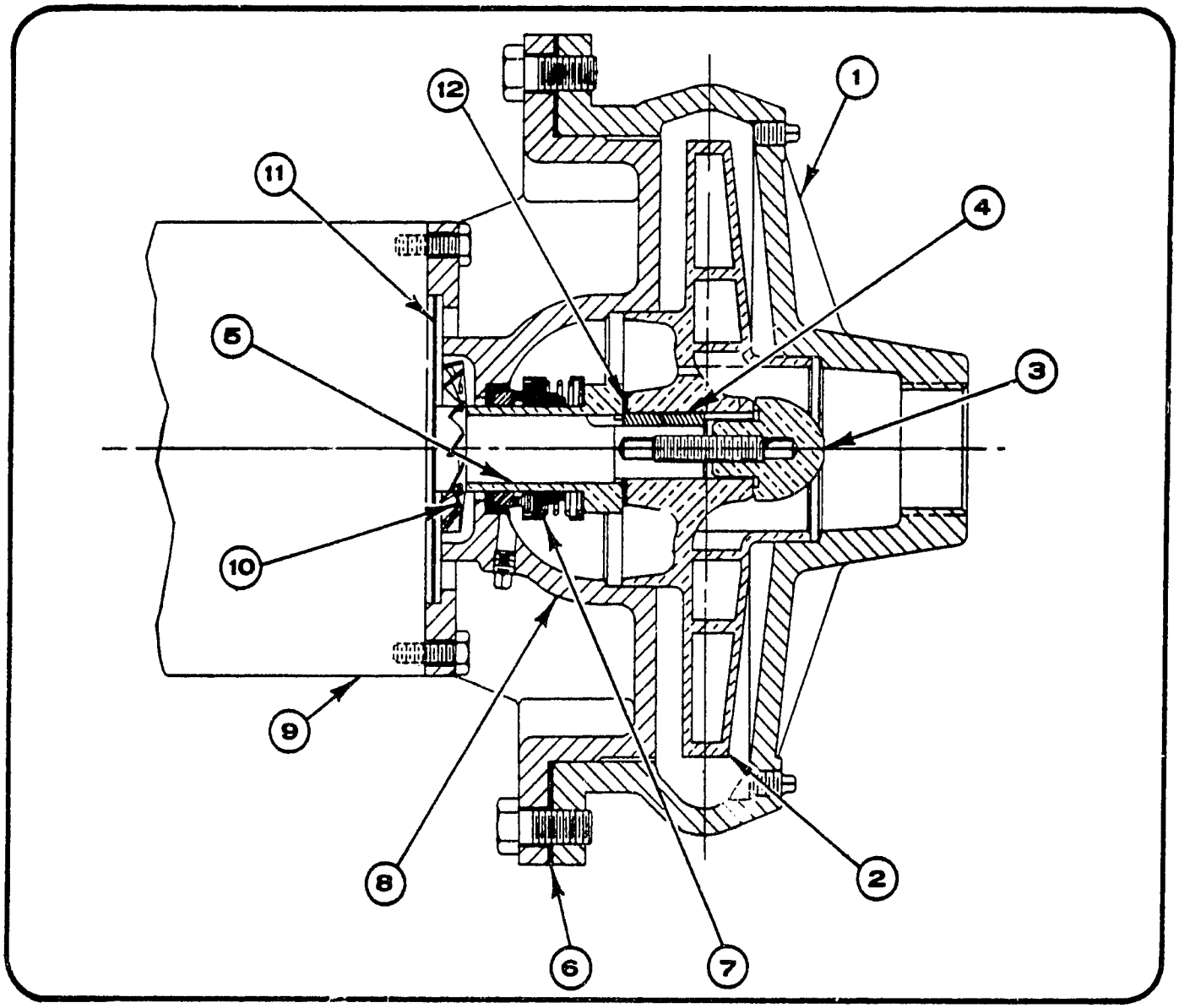

A9 PUMP AND PARTS LIST
SERIES A – 10 HP AND 15 HP

PART NUMBER AND DESCRIPTION	10 HP 1¼" 3ϕ A9D2A	10 HP 2" 3ϕ A9D2A	10 HP 2½" 3ϕ A9D2A	15 HP 2" 3ϕ A9D2A
1 CASE (CAST IRON) CASE (BRONZE)	F540 D2-74	F544 D2-80	F545 D2-79	F544 D2-80
2 IMPELLER (BRONZE)	C2-3213X $6^3/_8$"	C2-3214X $5^{29}/_{32}$"	C2-3215X $5^{21}/_{32}$"	C2-3214X $6^5/_{16}$"
3 STUD & NUT ASSEMBLY	C10035 A2-3899	C10035 A2-3899	C10035 A2-3899	C10035 A2-3899
4 KEY	C7763	C7763	C7763	C7763
5 SLEEVE *	A2-3905	A2-3905	A2-3905	A2-3905
6 GASKET *	D5450	D5450	D5450	D5450
7 SHAFT SEAL *	3179	3179	3179	3179
8 HEAD (CAST IRON) HEAD (BRONZE)	D2-1481 D2-1483	D2-1481 D2-1483	D2-1481 D2-1483	D2-1481 D2-1483
9 MOTOR	Contact Dunham-Bush, Inc., Marshalltown, Iowa			
10 SLINGER	C1038	C1038	C1038	C1038
11 SHIELD	D5478	D5478	D5478	D5478
12 GASKET *	A2-3020	A2-3020	A2-3020	A2-3020

NOTES: 1. NON-STANDARD pump parts are not shown. When ordering repair parts, refer to page 1 of this catalog.
2. * = These parts are required when replacing shaft seal.

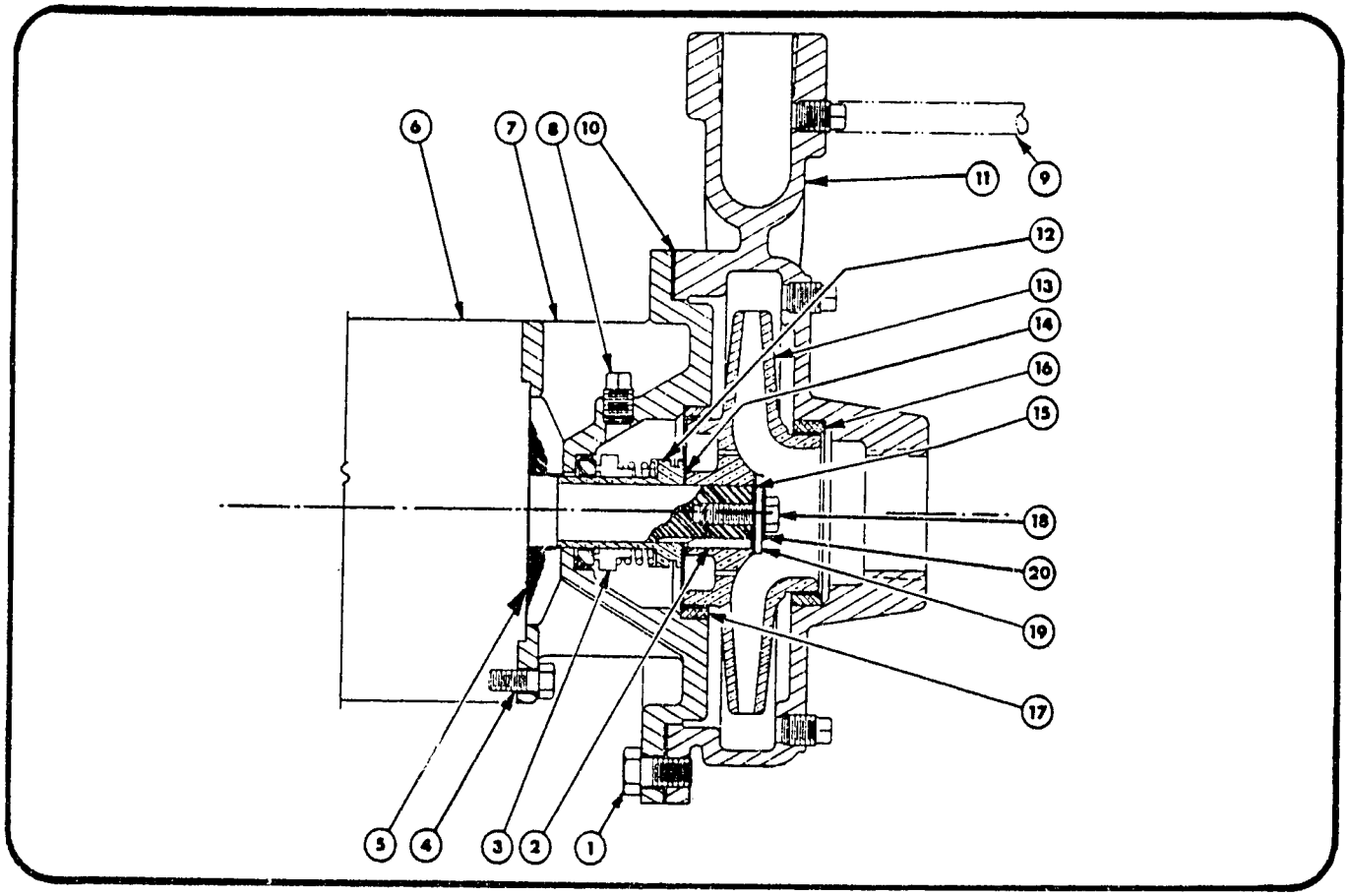

A7 PUMP AND PARTS LIST – ¾", 1¼" AND 1½" DIA. DISCHARGE

PART NUMBER & DESCRIPTION		¾" A7B	1¼" A7B	1¼" A7C	1½" A7B	1½" A7C
1.	Screw – Cap	P - 150				
2.	Key – Impeller	Supplied with Motor				
3.	Seal – Mechanical *	3179	3179	3179	3179	3179
	Seal – 250# Optional	Contact Dunham-Bush, Inc., Marshalltown, Iowa				
4.	Screw – Cap	P-142	P-142	P-150	P-142	P-150
5.	Slinger	Supplied with Motor				
6.	Motor	Contact Dunham-Bush, Inc., Marshalltown, Iowa				
7.	Head, C.I.	C2-2336	C2-2336	C2-2337	C2-2336	C2-2337
	Head, Bronze	C2-2660	C2-2660	C2-2661	C2-2660	C2-2661
	Head, C.I. w/wear Rings	C2-2345	C2-2345	C2-2346	C2-2345	C2-2346
8.	Fitting – Compression Straight	P - 194 (Optional)				
	Fitting – Elbow, Not shown	P - 195 (Optional)				
	Plug – Pipe	(5) P - 196				
9.	Tube	Copper 1/8" OD (Optional)				
10.	Gasket – Case *	C2-2343				
11.	Case, C.I.	C2-2390	C2-2335		C2-2377	
	Case, (Bronze)	C2-2665	C2-2666		C2-2667	
	Case, C.I. w/wear Rings	C2-2389	C2-2347		C2-2376	
	Case, 250# C.I.	Not Available				
	Case, 250# Bronze	Not Available				
	Case, 250# C.I. w/wear Rings	Not Available				
12.	Sleeve *	A2-3018	A2-3018	A2-3018	A2-3018	A2-3018
	Seal – 250# Optional	Contact Dunham-Bush, Inc., Marshalltown, Iowa				
13.	Impeller	C2-2378	C2-2340	C2-2340	C2-2380	C2-2380
14.	Gasket (Impeller – Sleeve) *	A2-3020	A2-3020	A2-3020	A2-3020	A2-3020
15.	Gasket (Impeller – Head) *	A2-3022-1				
16.	Ring – Case Wear Ring	A2-3026	A2-3015		A2-3027	
17.	Ring – Head Wear Ring	A2-3016				
18.	Screw – Impeller	3312	3312	3312	3312	3312
19.	Washer – Impeller	A2-3021-1				
20.	Washer – Sealing	3313	3313	3313	3313	3313

NOTES: 1. NON-STANDARD pump parts are not shown. When ordering repair parts, refer to page 1 of this catalog.
2. * = These parts are required when replacing shaft seal.

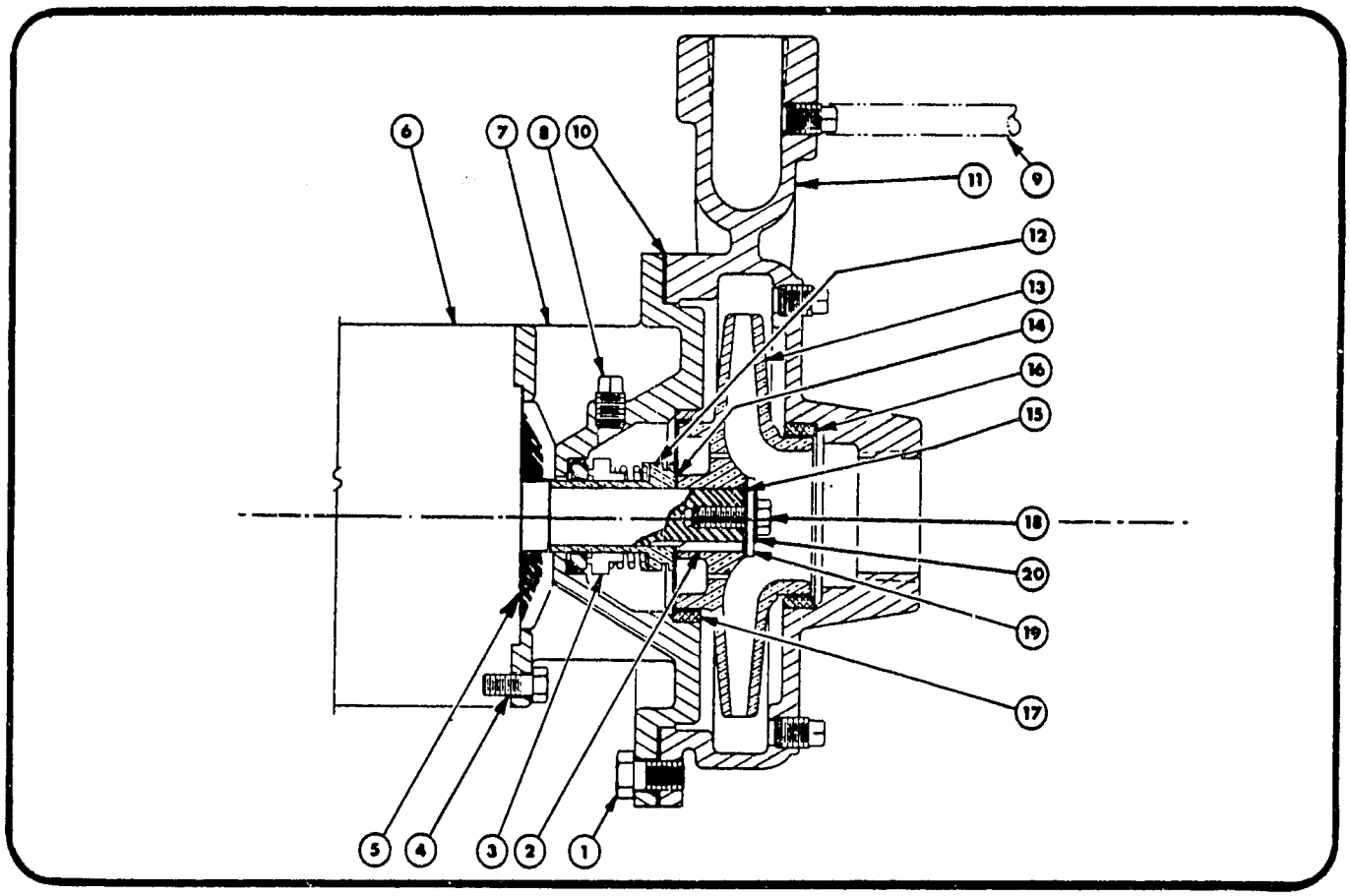

A7 PUMP AND PARTS LIST – 2" AND 2½" DIA. DISCHARGE

PART NUMBER & DESCRIPTION		2" A7D	2" A7E	2" A7F	2½" A7D	2½" A7E	2½" A7E H.C.	2½" A7F
1.	Screw – Cap	P - 150						
2.	Key – Impeller	Supplied with Motor						
3.	Seal – Mechanical *	3179	3179	3291	3179	3179	3179	3291
	Seal – 250# Optional	Contact Dunham-Bush, Inc., Marshalltown, Iowa						
4.	Screw – Cap	P - 142	P - 150	P - 150	P - 142	P - 150	P - 150	P - 150
5.	Slinger	Supplied with Motor						
6.	Motor	Contact Dunham-Bush, Inc., Marshalltown, Iowa						
7.	Head, C.I.	C2-2384	C2-2386	C2-2388	C2-2384	C2-2386	C2-2386	C2-2388
	Head, Bronze	C2-2662	C2-2663	C2-2664	C2-2662	C2-2663	C2-2663	C2-2664
	Head, C.I. w/wear rings	C2-2383	C2-2385	C2-2387	C2-2383	C2-2385	C2-2385	C2-2387
8.	Fitting – Compression Straight	P - 194 (Optional)						
	Fitting – Elbow, Not shown	P - 195 (Optional)						
	Plug – Pipe	(5) P - 196						
9.	Tube	Copper 1/8" OD (Optional)						
10.	Gasket – Case *	C2-2343						
11.	Case, C.I.	D2-1274			D2-1276			
	Case, (Bronze)	D2-1352			D2-1355			
	Case, C.I. w/wear rings	D2-1273			D2-1275			
	Case, 250# C.I.	Not Available						
	Case, 250# Bronze	Not Available						
	Case, 250# C.I. w/wear rings	Not Available						
12.	Sleeve *	A2-3018	A2-3018	A2-3025	A2-3018	A2-3018	A2-3018	A2-3025
	Seal – 250# Optional	Contact Dunham-Bush, Inc., Marshalltown, Iowa						
13.	Impeller	C2-2381	C2-2381	C2-2382	C2-2381	C2-2381	C2-2392	C2-2382
14.	Gasket (Impeller – Sleeve) *	A2-3020	A2-3020	A2-3029	A2-3020	A2-3020	A2-3020	A2-3029
15.	Gasket (Impeller – Head) *	A2-3021-1		A2-3022-2	A2-3022-1			A2-3022-2
16.	Ring – Case Wear Ring	A2-3028						
17.	Ring – Head Wear Ring	A2-3016						
18.	Screw – Impeller	3312	3312	3292	3312	3312	3312	3292
19.	Washer – Impeller	A2-3021-1		A2-3021-2	A2-3021-1			A2-3021-2
20.	Washer – Sealing	3313	3313	3293	3313	3313	3313	3293

NOTES: 1. NON-STANDARD pump parts are not shown. When ordering repair parts, refer to page 1 of this catalog.
2. * = These parts are required when replacing shaft seal.

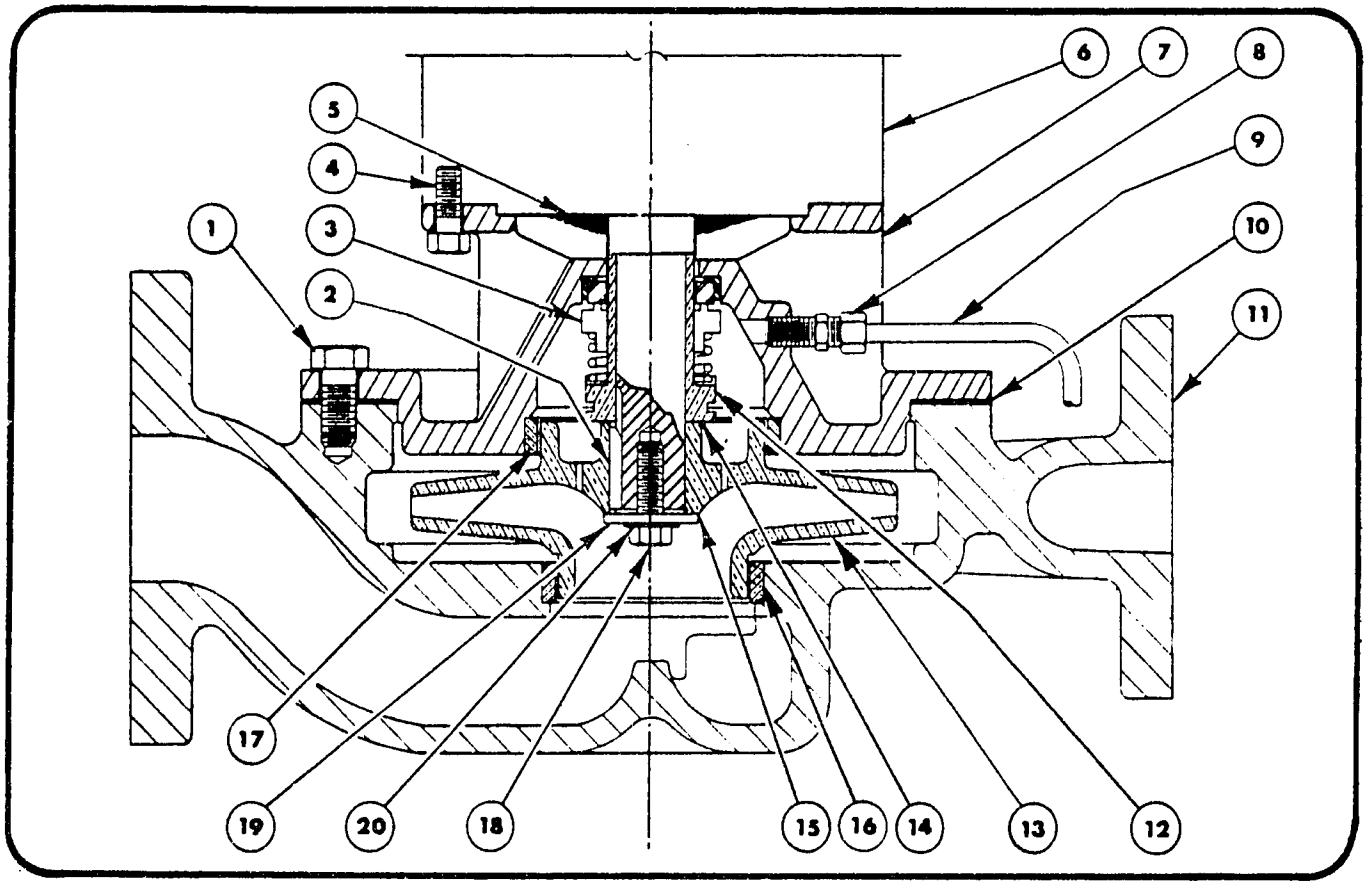

PM7 PUMP AND PARTS LIST – 1", 1¼" AND 1½" DIA. DISCHARGE

PART NUMBER & DESCRIPTION		1" PM7B	1¼" PM7B	1¼" PM7C	1½" PM7B	1½" PM7C
1.	Screw - Cap	P - 150				
2.	Key - Impeller	Supplied with Motor				
3.	Seal - Mechanical *	3179	3179	3179	3179	3179
	Seal 250# Optional	Contact Dunham-Bush, Inc. – Marshalltown, Iowa				
4.	Screw - Cap	P - 142	P - 142	P - 150	P - 142	P - 150
5.	Slinger	Supplied with Motor				
6.	Motor	Contact Dunham-Bush, Inc. – Marshalltown, Iowa				
7.	Head, C.I.	C2-2336	C2-2336	C2-2337	C2-2336	C2-2337
	Head, (Bronze)	C2-2660	C2-2660	C2-2661	C2-2660	C2-2661
	Head, C.I. w/wear rings	C2-2345	C2-2345	C2-2346	C2-2345	C2-2346
8.	Fitting - Compression Straight	P-194				
	Fitting - Elbow – Not shown	P-195				
	Plug - Pipe	(1) P-196				
9.	Tube	Copper 1/8" OD				
10.	Gasket - Case *	C2-2343				
11.	Case, C.I.	D2-1268	D2-1256	D2-1256	D2-1266	D2-1266
	Case, (Bronze)	D2-1346	D2-1348	D2-1348	D2-1350	D2-1350
	Case, C.I. w/wear rings	D2-1267	D2-1255	D2-1255	D2-1265	D2-1265
	Case, 250# C.I.	D2-1299	D2-1301	D2-1301	D2-1303	D2-1303
	Case, 250# Bronze	D2-1347	D2-1349	D2-1349	D2-1351	D2-1351
	Case, 250# C.I. w/wear rings	D2-1300	D2-1302	D2-1302	D2-1304	D2-1304
12.	Sleeve *	A2-3018	A2-3018	A2-3018	A2-3018	A2-3018
	Seal 250# Optional	Contact Dunham-Bush, Inc. – Marshalltown, Iowa				
13.	Impeller	C2-2379	C2-2340	C2-2340	C2-2380	C2-2380
14.	Gasket (Impeller - Sleeve) *	A2-3020	A2-3020	A2-3020	A2-3020	A2-3020
15.	Gasket (Impeller - Head) *	A2-3022-1				
16.	Ring - Case Wear Ring	A2-3026	A2-3015	A2-3015	A2-3027	A2-3027
17.	Ring - Head Wear Ring	A2-3016				
18.	Screw - Impeller	3312				
19.	Washer - Impeller	A2-3021-1				
20.	Washer - Sealing	3313				

NOTES:
1. NON-STANDARD pump parts are not shown. When ordering repair parts, refer to page 1 of this catalog.
2. * = These parts are required when replacing shaft seal.

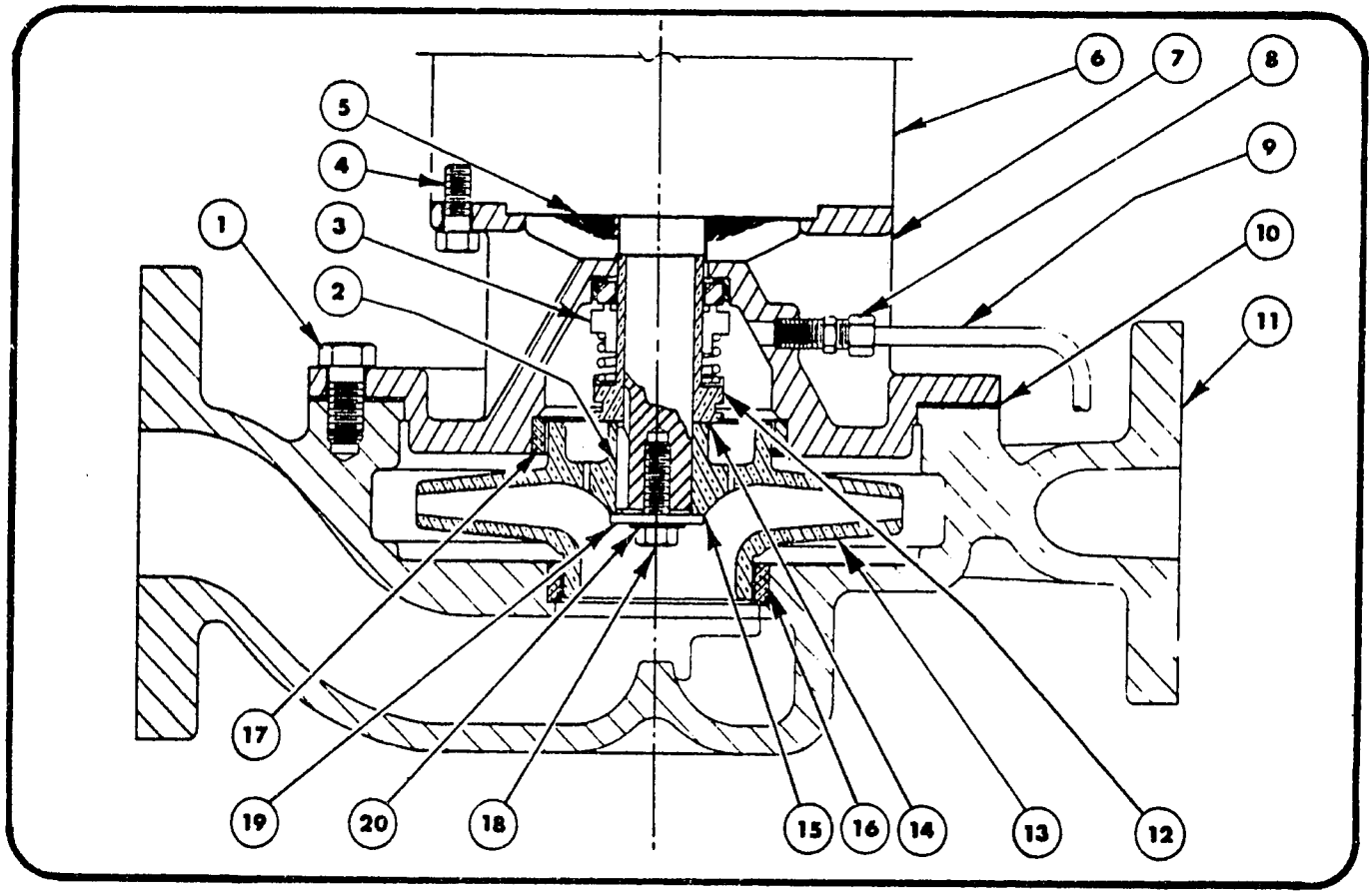

PM7 PUMP AND PARTS LIST – 2" AND 2½" DIA. DISCHARGE

PART NUMBER & DESCRIPTION		2" PM7D	2" PM7E	2" PM7F	2½" PM7D	2½" PM7E	2½" PM7E H.C.	2½" PM7F
1.	Screw - Cap	P - 150						
2.	Key - Impeller	Supplied with Motor						
3.	Seal - Mechanical *	3179	3179	3291	3179	3179	3179	3291
	Seal 250# Optional	Contact Dunham-Bush, Inc. – Marshalltown, Iowa						
4.	Screw - Cap	P - 142	P - 150	P - 150	P - 142	P -150	P - 150	P -150
5.	Slinger	Supplied with Motor						
6.	Motor	Contact Dunham-Bush, Inc. – Marshalltown, Iowa						
7.	Head, C.I.	C2-2384	C2-2386	C2-2388	C2-2384	C2-2386	C2-2386	C2-2388
	Head, (Bronze)	C2-2662	C2-2663	C2-2664	C2-2662	C2-2663	C2-2663	C2-2664
	Head, C.I. w/wear rings	C2-2383	C2-2385	C2-2387	C2-2383	C2-2385	C2-2385	C2-2387
8.	Fitting - Compression Straight	P-194						
	Fitting - Elbow – Not Shown	P-195						
	Plug - Pipe	(1) P-196						
9.	Tube	Copper 1/8" OD						
10.	Gasket - Case *	C2-2343						
11.	Case, C.I.	D2-1270			D2-1272			
	Case, (Bronze)	D2-1269			D2-1356			
	Case, C.I. w/wear rings	D2-1353			D2-1271			
	Case, 250# C.I.	D2-1305			D2-1307			
	Case, 250# Bronze	D2-1354			D2-1357			
	Case, 250# C.I. w/wear rings	D2-1306			D2-1308			
12.	Sleeve *	A2-3018	A2-3018	A2-3025	A2-3018	A2-3018	A2-3018	A2-3025
	Seal 250# Optional	Contact Dunham-Bush, Inc. – Marshalltown, Iowa						
13.	Impeller	C2-2381	C2-2381	C2-2382	C2-2381	C2-2381	C2-2392	C2-2382
14.	Gasket (Impeller - Sleeve) *	A2-3020	A2-3020	A2-3029	A2-3020	A2-3020	A2-3020	A2-3029
15.	Gasket (Impeller - Head)	A2-3022-1		A2-3022-2	A2-3022-1			A2-3022-2
16.	Ring - Case Wear Ring	A2-3028						
17.	Ring - Head Wear Ring	A2-3016						
18.	Screw - Impeller	3312		3292	3312			3292
19.	Washer - Impeller	A2-3021-1		A2-3021-2	A2-3021-1			A2-3021-2
20.	Washer - Sealing	3313		3293	3313			3293

NOTES: 1. NON-STANDARD pump parts are not shown. When ordering repair parts, refer to page 1 of this catalog.
2. * = These parts are required when replacing shaft seal.

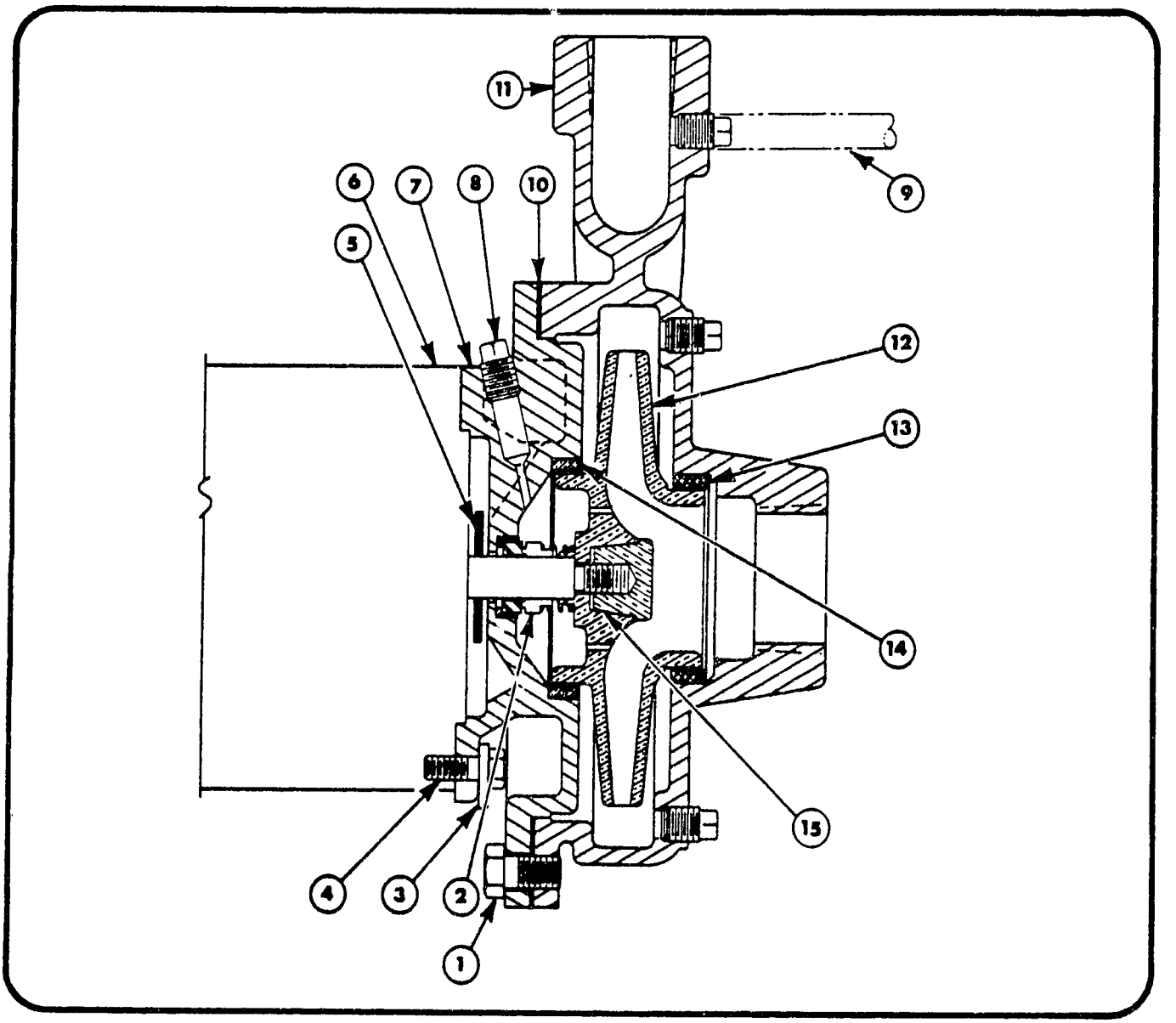

A7A PUMP AND PARTS LIST – ¾", 1¼" AND 1½" DIA. DISCHARGE

	PART NUMBER & DESCRIPTION	¾" A7A	1¼" A7A	1½" A7A
1.	Screw–Cap	P - 150	P - 150	P - 150
2.	Seal–Mechanical *	472	472	472
3.	Retainer–Head	A2-3023	A2-3023	A2-3023
4.	Screw–Cap	P - 142	P - 142	P - 142
5.	Slinger	C8854	C8854	C8854
6.	Motor	Contact Dunham-Bush, Inc. Marshalltown, Iowa		
7.	Head, C.I.	C2-2342	C2-2342	C2-2342
	Head, Bronze	C2-2659	C2-2659	C2-2659
	Head, C.I. w/wear rings	C2-2344	C2-2344	C2-2344
8.	Fitting – Compression Straight	P - 194 (Optional)		
	Fitting – Elbow (Not Shown)	P - 195 (Optional)		
	Plug–Pipe	(5) P - 196		
9.	Tube	Copper 1/8" OD (Optional)		
10.	Gasket–Case *	C2-2343	C2-2343	C2-2343
11.	Case, C.I.	C2-2390	C2-2335	C2-2377
	Case, Bronze	C2-2665	C2-2666	C2-2667
	Case, C.I. w/wear rings	C2-2389	C2-2347	C2-2376
12.	Impeller	C2-2378	C2-2339	C2-2498
13.	Ring – Case Wear Ring	A2-3026	A2-3015	A2-3027
14.	Ring – Head Wear Ring	A2-3016	A2-3016	A2-3016
15.	Screw–Impeller	A2-3691	A2-3691	A2-3691

NOTES:
1. NON-STANDARD pump parts are not shown. When ordering repair parts, refer to page 1 of this catalog.
2. * = These parts are required when replacing shaft seal.

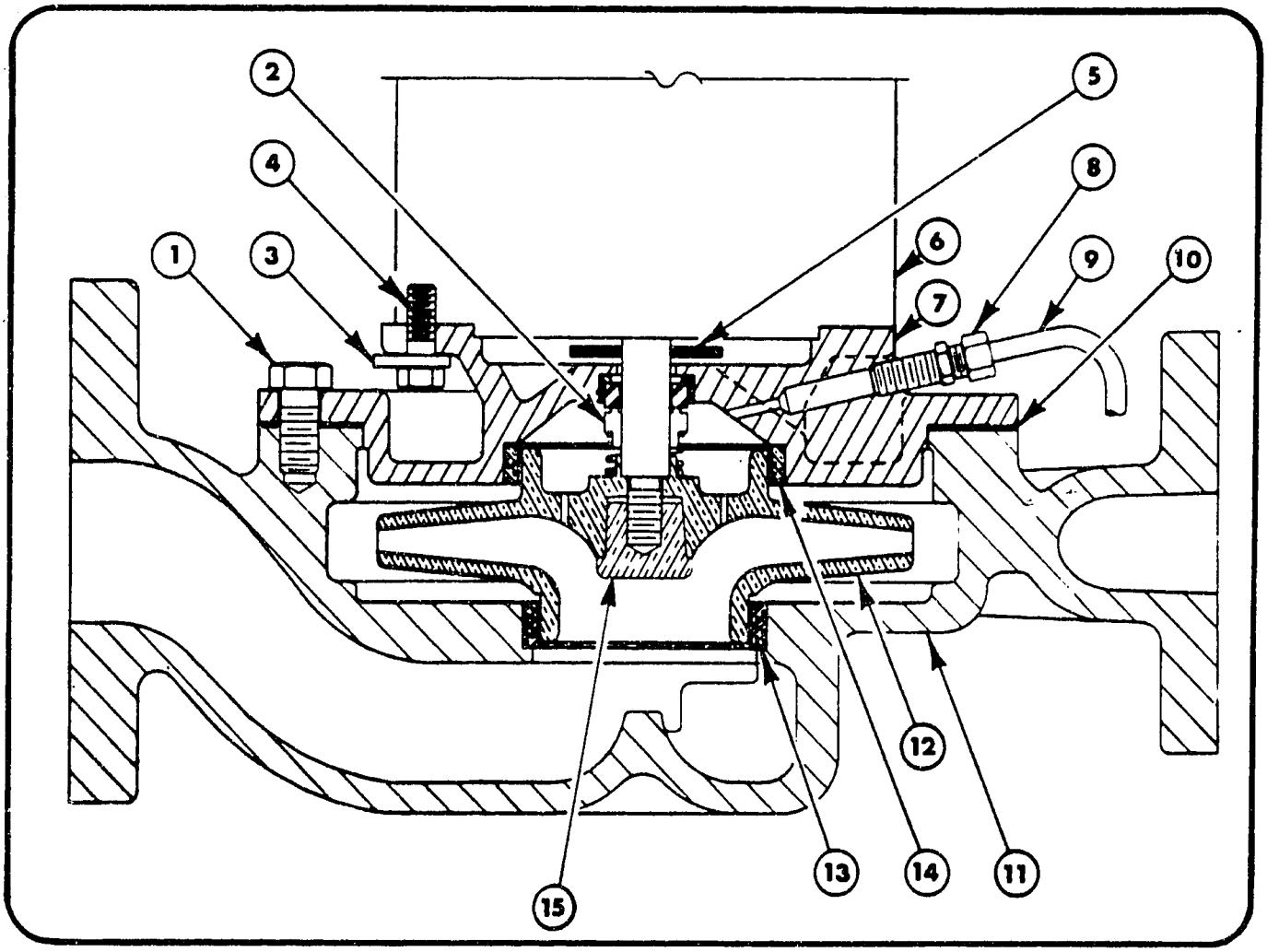

PM7A PUMP AND PARTS LIST
1", 1¼" AND 1½" DIA. DISCHARGE

PART NUMBER & DESCRIPTION		1" PM7A	1¼" PM7A	1½" PM7A
1.	Screw—Cap	P - 150	P - 150	P - 150
2.	Seal—Mechanical *	472	472	472
3.	Retainer—Head	A2-3023	A2-3023	A2-3023
4.	Screw—Cap	P - 142	P - 142	P - 142
5.	Slinger	C8854	C8854	C8854
6.	Motor	Contact Dunham-Bush, Inc., Marshalltown, Iowa		
7.	Head, C.I.	C2-2342	C2-2342	C2-2342
	Head, Bronze	C2-2659	C2-2659	C2-2659
	Head, C.I. w/wear rings	C2-2344	C2-2344	C2-2344
8.	Fitting—Compression Straight	P - 194		
	Fitting—Elbow (Not Shown)	P - 195		
	Plug—Pipe	(1) P - 196		
9.	Tube	Copper 1/8" OD		
10.	Gasket—Case *	C2-2343	C2-2343	C2-2343
11.	Case, C.I.	D2-1268	D2-1256	D2-1266
	Case, Bronze	D2-1346	D2-1348	D2-1350
	Case, C.I. w/wear rings	D2-1267	D2-1255	D2-1265
	Case, 250# C.I.	D2-1299	D2-1301	D2-1303
	Case, 250# Bronze	D2-1347	D2-1349	D2-1351
	Case, 250# C.I. w/wear rings	D2-1300	D2-1302	D2-1304
12.	Impeller	C2-2378	C2-2339	C2-2498
13.	Ring—Case Wear Ring	A2-3026	A2-3015	A2-3027
14.	Ring—Head Wear Ring	A2-3016	A2-3016	A2-3016
15.	Nut—Impeller	A2-3691	A2-3691	A2-3691

NOTES:
1. NON-STANDARD pump parts are not shown. When ordering repair parts, refer to page 1 of this catalog.
2. * = These parts are required when replacing shaft seal.

DUNHAM-BUSH

AIR CONDITIONING, REFRIGERATION, HEATING PRODUCTS AND ACCESSORIES

MAIN OFFICES AND FACTORIES

MAIN OFFICES
175 South Street
West Hartford, Connecticut
06110

WEST HARTFORD DIVISION
179 South Street
West Hartford, Connecticut
06110

HARRISONBURG DIVISION
101 Burgess Road
Harrisonburg, Virginia
22801

MARSHALLTOWN DIVISION
811 East Main Street
Marshalltown, Iowa
50158

SUBSIDIARIES

DUNHAM-BUSH of Canada Limited
140 Wendell Avenue
Weston, Ontario

DUNHAM-BUSH, LTD.
Fitzherbert Road, Farlington
Portsmouth, Hampshire, England

DUNHAM-BUSH INTERNATIONAL: 175 South Street, West Hartford, Connecticut 06110, U.S.A.
CABLE: DUNBUSH or TELEX: 994469

SALES OFFICES

ALABAMA
Birmingham
Mobile

ARIZONA
Phoenix

ARKANSAS
Little Rock

CALIFORNIA
Arcadia
Los Angeles
San Diego
San Francisco

COLORADO
Denver

CONNECTICUT
Hartford
New Haven

FLORIDA
Jacksonville
Miami
Orlando
Tampa

GEORGIA
Atlanta

HAWAII
Honolulu

ILLINOIS
Chicago
Peoria
Rockford

INDIANA
Indianapolis
Michigan City

IOWA
DesMoines

KANSAS
Lenexa

KENTUCKY
Louisville

LOUISIANA
New Orleans
Shreveport

MAINE
Lewiston

MARYLAND
Baltimore
Silver Spring

MASSACHUSETTS
Boston
Springfield

MICHIGAN
Detroit
Grand Rapids
Kalamazoo

MINNESOTA
Minneapolis

MISSISSIPPI
Jackson

MISSOURI
Kansas City
St. Louis

MONTANA
Billings
Great Falls

NEBRASKA
Omaha

NEW JERSEY
Little Falls
South Amboy
Union

NEW MEXICO
Albuquerque

NEW YORK
Albany
Buffalo
New York City
Rochester
Syracuse

NORTH CAROLINA
Charlotte
Greensboro

OHIO
Akron
Cincinnati
Cleveland
Columbus
Dayton
Delaware
Toledo

OKLAHOMA
Oklahoma City
Tulsa

OREGON
Portland

PENNSYLVANIA
Harrisburg
Philadelphia

PENNSYLVANIA (Cond't)
Pittsburgh
Pittston

RHODE ISLAND
Providence

SOUTH CAROLINA
Columbia
Greenville

TENNESSEE
Chattanooga
Memphis
Knoxville
Nashville

TEXAS
Austin
Corpus Christie
Dallas
Fort Worth
El Paso
Houston
Lubbock
San Antonio

UTAH
Salt Lake City

VIRGINIA
Alexandria
Richmond

WASHINGTON
Seattle
Spokane

WEST VIRGINIA
Barboursville

WISCONSIN
Milwaukee

DUNHAM-BUSH, INC. • West Hartford, Connecticut 06110, U.S.A.

2505B-7.5M-567A-1177B

one of The Signal Companies

Exhibit D-5

DUNHAM-BUSH

RECIPROCATING COMPRESSOR CONSOLIDATED PARTS PRICE LIST

COMPRESSOR LINE	FOR SELECTION REFER TO: (LATEST REVISION)
D/B-Metic & D-Line	Form No. 4032
Big-4 Compressors (a) semi-hermetic (b) direct-drive	Form No. 4056 , 4056-1 4056-2
Belt-Drive Compressors	Form No. 4004
Multi-Drive Compressors (a) semi-hermetic (b) direct-drive	Form No. 4022

TERMS OF SHIPMENT: F.O.B. SHIPPING POINT.

ALL PRICES SUBJECT TO CHANGE WITHOUT NOTICE.

PARTS WILL BE INVOICED AT PRICES IN EFFECT AT THE TIME OF SHIPMENT.

ORDERING INSTRUCTIONS

1. Complete part number and its description is required when ordering.
2. When a part number is not known or shown in the parts catalog, complete model and serial number of the compressor on which the part is to be used should be given.
3. Send all orders to: Dunham-Bush, Inc. Service Parts Dept.
   179 South Street, West Hartford, Connecticut 06110
4. All prices are for one each part or kit as applicable.
5. Federal, state, local or other taxes are not included in the attached prices.
6. We reserve the right to ship substitute parts or alternate parts when interchangeable with the part ordered. The invoice will cover the price of the actual part shipped.
7. All orders requiring SPECIAL HANDLING, will have $50 net additional charge invoiced or actual cost whichever is higher. This includes delivery to the airport, bus station, etc.
8. Minimum billing is $25.00
9. Refer to latest revision of Form 1278 for terms of sale.

PART NUMBER	DESCRIPTION	LIST PRICE
*ASY136A	UNLOADER CONT ASSY	1,521.26
ADP15	ADAPTER	54.81
ADP64	ADAPTER BLOCK	50.46
ADP65	ADAPTER BLOCK	44.73
ADP66	ADAPT FITTING	17.62
ADP71	ADAPTER FITTING	17.07
ADP77	EQUAL VALVE ADAPT	13.97
ASY161A	ELEC CONT ASSY	443.20
ASY162A	CAP CONT ASSY	155.04
ASY230	SEE 050148A1	.00
ASY265A	THERMOSTAT	41.02
ASY268A	UNLOADER CONT ASSY	1,525.45
ASY859	OIL COOLER ASSY	105.36
ASY860	OIL COOLER ASSY	105.36
ASY862	PISTON ASSY PST51A	137.11
ASY864	PISTON ASSY PST38A	85.23
A650B16	GASKET 65016	5.34
BFRK1	115V CONTROL KIT	206.76
BFRK2	230V CONTROL KIT	207.92
BLK28	TERM SEP BLOCK	13.23
BRG123	BEARING	14.60
BRG31	BEARING OIL PUMP	99.69
BRG47	BEARING	73.01
BRG53	PUMP HSG BEARING	26.43
BRG54	CRNKCASE MAIN BEAR	18.76
BUS39	BUSHING	3.05
BUS78	BUSHING	1.75
BOX2261	TERM BOX W/CUV	48.97
BOX2501	B/M BOX ASSY NO	174.52
BOX2502	B/M BOX ASSY NO	174.52
BOX2508	B/M BOX ASSY NO	154.62
BOX2509	B/M BOX ASSY NO	115.74
BOX2510	B/M BOX ASSY NO	55.12
BOX2511	B/M BOX ASSY NO	154.62
BOX2512	B/M BOX ASSY NO	145.45
BOX2513	B/M BOX ASSY NO	137.16
BOX2514	B/M BOX ASSY NO	276.69
BOX2515	B/M BOX ASSY NO	87.98
BOX2518	B/M BOX ASSY NO	172.67
BOX2519	B/M BOX ASSY NO	144.69
BOX2520	B/M BOX ASSY NO	69.54
BOX2521	B/M BOX ASSY NO	66.37
BOX2523	B/M BOX ASSY NO	176.28
BOX2524	B/M BOX ASSY NO	170.87
BOX2525	B/M BOX ASSY NO	192.40
BOX2526	B/M BOX ASSY NO	134.58
BOX2528	B/M BOX ASSY NO	162.03
BOX2529	B/M BOX ASSY NO	204.74
BOX2530	B/M BOX ASSY NO	145.45
BOX2531	B/M BOX ASSY NO	124.87
BOX2564	B/M BOX ASSY NO	280.48
BOX2565	B/M BOX ASSY NO	260.23
BOX2566	B/M BOX ASSY NO	174.48
BOX2567	B/M BOX ASSY NO	156.35
BOX2867	TERMINAL BOX	30.14
BOX2868	TERMINAL BOX	33.70
BOX2869	TERMINAL BOX	94.75
BOX2870	TERMINAL BOX	31.69
BOX2871	TERMINAL BOX	68.73
BOX2872	TERMINAL BOX	28.81
CBL4	COUNTER WEIGHT	25.52
CBL5	COUNTER BALANCE	32.85
CKS12	CRANKSHAFT	FACTORY
CKS13	CRANKSHAFT	FACTORY
CKS14	CRANKSHAFT	FACTORY
CKS15	CRANKSHAFT	FACTORY
CKS29	CRANKSHAFT	FACTORY
CKS30	CRANKSHAFT	FACTORY
CKS31	CRANKSHAFT	FACTORY
CKS32	CRANKSHAFT	FACTORY

PART NUMBER	DESCRIPTION	LIST PRICE
CKS33	CRANKSHAFT	FACTORY
CKS34	CRANKSHAFT	FACTORY
CKS35	CRANKSHAFT	FACTORY
CKS52	CRANKSHAFT	FACTORY
CKS53T1	CRANKSHAFT	FACTORY
CKS53T2	CRANKSHAFT	FACTORY
CKS56T1	CRANKSHAFT	FACTORY
CKS57	CRANKSHAFT	FACTORY
CNT104	UNL PRESS SWITCH	39.20
CNT106	CONTROL	165.39
CNT138T1	CNT-SEE BFRK1 115V	.00
CNT138T2	CNT-SEE BFRK2 230V	.00
CNT24	CONTROL	134.51
CPL102TA	COUPLING	658.29
CPL103TA	COUPLING	691.65
CPL129TA	COUPLING	594.93
CPL148T1	COUPLING	184.76
CPL34TA	COUPLING	973.88
CPL35TA	COUPLING	862.68
CPL36TA	COUPLING	1,036.68
CPL59TA	COUPLING	569.27
CPR18	CAPACITOR	30.28
CPR19	CAPACITOR	32.33
CPR20	CAPACITOR	29.07
CPR22	CAPACITOR	49.57
CPR23	CAPACITOR	77.58
COL117T1	COIL 24V	41.15
COL117T2	COIL 115V	41.15
COL117T3	COIL 208V	41.15
COL117T4	COIL 230V	39.17
COL118T1	USE COL141T1	.00
COL118T9	USE COL141T2	.00
COL141T1	COIL	33.18
COL141T2	COIL 230V	33.18
CON36	OIL COOLER CONNECTOR	12.54
COV10	HAND HOLE COVER	53.93
COV110	COVER	9.36
COV111	COVER	13.58
COV112	MOTOR END COVER	221.84
DFR1	FOAM DIFFUSER	53.37
DIS14	RETAIN DISC	6.11
ECC15	ECCENTRIC	234.73
FLG8	FLANGE	28.86
FLR16	SUCTION FILTER	8.58
FLR28	SUCTION FILTER	33.47
FLR29	FILTER	15.93
FLR31	SUCT FILTER	22.13
FLR32	SUCT FILTER	20.02
FLR34	FILTER	15.75
FLR35	FILTER	22.65
FLR38	FILTER	51.56
FLR39	FILTER	25.73
FLR40	FILTER	44.10
FUS4	FUSE 1 1/4 AMP	3.63
GA1000	CONN ROD	39.22
GA1006	SEAL	1.40
GA1010	SEE GKT379	.00
GA1011	GASKET	4.41
GA1013	PISTON WASH	.64
GA1014	PISTON RING	2.54
GA1017	OUTER THRUST WASH	2.07
GA1021	ROTOR COUNTERWEIGHT	24.07
GA1026	PISTON RING	2.07
GA1027	PISTON RING	2.07
GA1028	KEY SHAFT	1.51
GA1029	KEY SHAFT	.93
GA1030	KEY SHAFT	.80
GA1033	SEE GKT343	.00
GA1037	BEARING	20.67
GA1038	BEARING	6.53

$100.00 NET EXCHANGE CREDIT ALLOWED UPON RETURN IF HOUSING IS SALVAGEABLE.

PART NUMBER	DESCRIPTION	LIST PRICE
GA1039	GASKET	.66
GA106	GASKET	9.35
GA109	STRAINER	4.89
GA111	GASKET KIT	9.53
GA112	O RING	2.63
GA1207	TERMINAL BLOCK	6.94
GA1209	COVER GASKET	6.44
GA1210	SEE GKT340	.00
GA1228	SIGHT GLASS	3.90
GA1233	SIGHT GLASS GASKET	.71
GA1235	USE KIT334	.00
GA1289	ROTOR COUNTERWEIGHT	22.90
GA1366	SEE GKT329	.00
GA1376	TERM STRIP	4.38
GA1378	BUSHING	.71
GA1380	WASHER	.71
GA1478	GASKET	3.63
GA1518	VORTEX ELIM	11.13
GA1521	C C HEATER-240V	59.08
GA1522	C C HEATER-120V	59.08
GA1550	BEARING	6.28
GA1554	BEARING	8.14
GA1581	OIL PRESSURE REL VAL	10.39
GA1612	TEE	4.93
GA1683	RING .010	2.55
GA1693	GASKET	2.55
GA1731	SEAL ASSY	70.81
GA1966	INN THRUST WASHER	11.45
GA1967	THRUST WASHER	25.19
GA1968	OUTER THRUST WASH	13.75
GA1969	INN THRUST WASHER	10.60
GA210	SIGHT GLASS	4.59
GA211	RETAINER	4.82
GA212	FRICTION RING	.93
GA213	SIGHT GLASS GASKET	.71
GA369	GASKET	1.40
GA422	SUCT SERV VALVE	34.79
GA423	SUCT SERV VALVE	39.20
GA424	SUCT SERV VALVE	106.23
GA429	KEY SHAFT	1.78
GA430	GASKET	1.40
GA431	TEFLON GASKET	1.92
GA461T1	VALVE ADAPTER	106.85
GA461T2	SUCT VALVE ADAP	122.96
GA461T3	ADAPTER	65.24
GA462	GASKET	2.59
GA463	GASKET	2.76
GA466	ADAPTER	77.80
GA467	GASKET	.71
GB1000	SLINGER	21.12
GB1001	PISTON & PIN ASSY	28.86
GB1002	PISTON & PIN ASSY	22.81
GB1003	PISTON & PIN ASSY	26.45
GB1018T1	KLIXON	12.01
GB1018T2	KLIXON	12.01
GB1018T3	KLIXON	14.60
GB1019T1	KLIXON	42.08
GB1019T2	KLIXON	36.47
GB1042	VALVE PLATE ASSY	54.10
GB1089	HEAD GASKET	2.59
GB1090	SEE GKT375	.00
GB1091	SIGHT GLASS RET	19.00
GB1117T1	KLIXON	45.20
GB1117T2	KLIXON	43.14
GB1126T2	KLIXON	54.95
GB1126T3	KLIXON	54.95
GB1126T4	KLIXON	54.95
GB1126T5	KLIXON	54.95
GB1126T6	KLIXON	54.95
GB1127T1	KLIXON	44.71
GB1127T2	KLIXON	44.71
GB1127T3	KLIXON	44.71
GB1127T4	KLIXON	44.71
GB1127T5	KLIXON	48.92
GB1127T6	KLIXON	59.73
GB1127T7	KLIXON	54.95
GB1127T8	PROTECTOR	51.98
GB1127T9	KLIXON	54.95
GB1128T1	KLIXON	54.95
GB1128T2	KLIXON	65.61
GB1203	SEAL ASSY	73.68
GB126T1	RELAY	20.02
GB126T3	RELAY	26.61
GB126T4	START RELAY	22.74
GB126T5	START RELAY	39.64
GB1368	PISTON & PIN ASSY	78.10
GB1369	PISTON & PIN ASSY	96.67
GB1381	OIL STRAINER	33.10
GB1473T1	KLIXON	75.87
GB1473T2	KLIXON	75.87
GB1528	PISTON	33.18
GB158	GASKET	5.34
GB160	VALVE PLATE ASY	42.19
GB171	VALVE PLATE ASY	43.32
GB191T1	RELAY	29.32
GB191T3	RELAY	40.84
GB277	COVER	5.43
GB280	CYLINDER HEAD	25.08
GB282	TERM PLATE	31.62
GB283	TERM PLATE	40.07
GB284	PISTON	63.53
GB285	TERM BOX	455.33
GB286	TERMINAL BOX	156.07
GB87	TERM ASSY	3.56
GB93	TERMINAL BLOCK	2.59
GC1000	CRANKSHAFT	403.44
GC1001	CRANKSHAFT	442.44
GC1003	HEAD RH	29.26
GC1007	HEAD LH	29.79
GC1150	HEAD GASKET	3.63
GC1151	SEE GKT377	.00
GC1156	CONN ROD	33.18
GC1162	VALVE PLATE ASSY	112.93
GC1163	SEE PLT2001A	.00
GC1344	GASKET	5.28
GC1347	GASKET	6.61
GC1348	ROD CONN	35.46
GC386	TERMINAL BOX	75.73
GD1001	BEARING HOUSING	125.58
GD1047T1	END COVER	137.67
GD1053	SEE BOX2870	.00
GD1084	SEE PLT960A	.00
GD1085	SEE PLT959A	.00
GD1086	SEE PLT963A	.00
GD1087	SEE PLT964A	.00
GD1117	CRANKSHAFT	597.31
GD1151	CRANK SHAFT	647.98
GD1189	HEAD RH	88.93
GD1190	HEAD LH	90.74
GD1191	HEAD RH	68.33
GD1192	HEAD LH	68.95
GD1194	HOUSING SEAL	266.91
GD1200	HOUSING SEAL	308.25
GD1218T1	END PLATE	243.42
GD1218T2	END COVER	254.14
GD1226	CONN ROD	86.16
GD1227	CRANKSHAFT	818.53
GKT100	GASKET	2.44
GKT105	CONDUIT COVER	4.93
GKT106	VALVE PLATE	1.40

PART NUMBER	DESCRIPTION	LIST PRICE
GKT113	OIL PUMP GASKET	5.28
GKT121	HOUSING GASKET	5.68
GKT122	TERM PLATE GASKET	3.48
GKT123	HEAD GASKET RH	6.16
GKT124	VALV PLATE GASKET	7.18
GKT125	HEAD GASKET LH	7.18
GKT127	SPACER PLATE GASKET	8.27
GKT157	SPACER PLATE GASKET	8.05
GKT158	VALVE PLATE GASKET	8.05
GKT159	GASKET	1.94
GKT215	UNL VAL GASKET	2.42
GKT23	GASKET	3.14
GKT24	GASKET	5.78
GKT28	GASKET	6.14
GKT30	GASKET	6.19
GKT301	VALV PLATE GASKET	6.19
GKT309	ADAPTER GASKET	8.13
GKT312	GASKET	1.75
GKT32	SEAL GASKET	1.61
GKT327	U V GKT KIT-KS30026	36.63
GKT328	USE KIT339 KS30031	.00
GKT340	VALV GASKET	1.75
GKT341	SEAL	1.40
GKT342	BOLT SEAL WASHER	.91
GKT343	HEAD GASKET	1.75
GKT370	VALVE PLATE GASKET	1.75
GKT371	VALVE PLATE GASKET	1.75
GKT372	VALVE PLATE GASKET	1.75
GKT373	VALVE GASKET	2.44
GKT374	VALVE GASKET	1.95
GKT375	VALVE GASKET	1.87
GKT376	VALVE PLATE GASKET	3.29
GKT377	VALVE PLATE GASKET	2.59
GKT398	VALVE GASKET	1.61
GKT50	HEAD	3.20
GKT51	HEAD	3.22
GKT52	HAND HOLE COVER	5.20
GKT53	HAND HOLE COVER	7.21
GKT54	HAND HOLE COVER	5.60
GKT55	CONDUIT COVER	9.75
GKT57	STRAINER COVER PLATE	8.89
GKT58	STRAINER COVER PLATE	2.53
GKT59	STRAINER COVER PLATE	4.82
GKT60	SUCTION LINE VALVE	1.61
GKT61	SUCTION LINE VALVE	3.38
GKT62	DISC LINE VALVE	1.61
GKT63	SUCTION LINE VALVE	3.46
GKT64	SUCTION LINE VALVE	3.46
GKT65	MOTOR COVER	7.47
GKT66	MOTOR COVER	16.37
GKT67	MOTOR COVER	19.97
GKT68	BEARING HOUSING	5.16
GKT69	BEARING HOUSING	5.80
GKT70	PUMP HOUSING	4.82
GKT71	PUMP HOUSING	4.82
GKT73	VALVE PLATE	1.44
GKT74	LINER TO CRANKCASE	2.42
GKT75	LINER TO CRANKCASE	2.63
GKT76	SEAL	6.89
GKT77	SEAL	2.98
GKT79	GASKET	8.40
GKT80	UNLOADER BODY	1.40
GKT81	GASKET	.93
GKT90	GASKET	1.44
GLS2	SIGHT GLASS	50.88
GLS3	OIL SIGHT GLASS	22.05
GLS4	SIGHT GLASS	27.73
GLS6	SIGHT GLASS	45.37
HD204	CYLINDER HEAD RH	358.49
HD205	CYLINDER HEAD LH	263.09

PART NUMBER	DESCRIPTION	LIST PRICE
HD206	CYLINDER HEAD RH	263.09
HD35	CYLINDER HEAD RH	183.26
HD36	CYLINDER HEAD LH	183.26
HD37	CYLINDER HEAD RH	183.26
HD38	HEAD	277.67
HD39	CYLINDER HEAD LH	222.78
HD40	CYLINDER HEAD LH	212.13
HD93	CYL HEAD R H	108.53
HD94	CYL HEAD L H	98.68
HD97	CYL HEAD RH	137.40
HD98	CYL HEAD L H	137.40
HSG12	SEAL HOUSING DIRECT	767.02
HSG13	SEAL HOUSING DIRECT	710.41
HSG31	SEAL HOUSING	580.99
HSG32B	PUMP HSG W/BEARING	592.69
HSG6A	BEARING HOUSING W/B	546.39
HTR19	CRANKCASE HEATER 220	321.99
HTR59T1	CRANKCASE HEATER 230	59.12
HTR59T2	CRANKCASE HEATER 115	59.12
HTR60	CRANKCASE HEATER	69.88
HTR61	CRANKCASE HEATER	69.88
INN8	TERM INSULATOR	1.40
INN9	TERM INSULATOR	1.40
JMP10	TERM JUMPER	2.59
JMP9	TERM JUMPER	7.73
KEY10	KEY	.98
KIT161	TERM STUD	72.15
KIT162	TERM STUD	72.15
KIT163	TERM STUD	75.97
KIT164	TERM STUD	73.78
KIT165	TERM STUD	73.78
KIT166	TERM STUD	75.97
KIT167	UNL MANIFOLD	1,152.03
KIT168	UNL MANIFOLD	1,188.46
KIT169	UNL MANIFOLD	1,092.13
KIT180	GASKET SET	154.25
KIT190	UNL CONT KIT	394.32
KIT259	VALV REPL KIT	50.46
KIT260	VALV REPL KIT	85.19
KIT261	MOTOR KIT	FACTORY
KIT262	MOTOR KIT	FACTORY
KIT269	UNL HOLD DOWN KIT	18.23
KIT277	PROT TERM ASSY	17.55
KIT278	PWR TERM ASSY	9.56
KIT307	OIL COOL KIT R12	436.64
KIT308	OIL COOL KIT R22/502	488.87
KIT309	OIL EQUAL KIT	115.83
KIT314	KIT	63.60
KIT330	KIT OIL RETURN	145.32
KIT333	OIL EQUALIZATION	79.68
KIT334	TERM STUD	98.75
KIT335	TERM STUD	101.08
KIT336	TERM STUD	90.73
KIT337	INT UNL CONV KIT	FACTORY
KIT339	ENCL TUBE ASSY	70.65
KIT342	GASKET SET	85.43
KIT344	SEAL ASSY SEL1A	104.81
KIT346	SEE KIT260	.00
KIT353	GASKETS	22.73
KIT354	GASKETS	33.33
KIT355	GASKETS	37.08
KIT356	SUCT & DISCH VALVE K	46.15
KIT357	CONV OLD STYLE OR NO	425.60
KIT358	CONV OLD STYLE OR NO	413.[illegible]
KIT367	KIT GASKET	115.30
KIT369	KEY	3.73
KIT370	UNL CLOS P&SP	56.30
KIT372	KIT UNLOADER PST	89.72
KIT373	SUCT & DISCH VALVE K	48.55
KIT374	UNL MANIFOLD	1,046.60

PART NUMBER	DESCRIPTION	LIST PRICE
LNR12	LINER NON-UNLOADED	168.75
LNR13	LINER NON-UNLOADED	278.10
LNR16	LINER UNLOADED	278.10
LNR4	LINER UNLOADED	208.98
MUF23	MUFFLER	266.36
NA8	GASKET	.68
NB3	GASKET	.85
NB4	GASKET	.85
NB45T1	PROTECTOR	15.30
NB45T2	PROTECTOR	15.57
NB45T3	PROTECTOR	15.72
NB45T4	KLIXON	16.65
NB45T5	PROTECTOR	18.76
NB45T6	KLIXON	15.04
NB45T7	KLIXON	18.75
NC54T10	CAPACITOR	27.66
NC54T11	SEE CPR17	.00
NC54T4	CAPACITOR	18.97
NUT6	SIGHT GLASS RET NUT	15.57
PAT10T1	BLUE SPRAY PAINT	12.90
PAT21T1	BEIGE SPRAY PAINT	.00
PIN21	PIN	9.41
PIN40	PIN PISTON	17.55
PIN41	PIN PISTON	14.42
PIN80	CRANK SHAFT PIN	1.40
PIN82T1	THRUST WASH ROLL PIN	1.40
PIN83T5	VALVE PLATE PIN	4.14
PIN84	UNL PIN 010 OS	8.23
PLT104A	VALVE PLATE ASSY	232.70
PLT178	ORIFICE PLATE	6.13
PLT180	ORIFICE PLATE	14.73
PLT2001A	VALVE PLATE ASSY	144.83
PLT2002A	VALVE PLT ASSY	211.27
PLT222A	TERM PLATE ASSY	297.38
PLT232	BAFFLE PLATE	33.04
PLT233	BAFFLE PLATE	33.61
PLT265	SPACER PLATE	297.38
PLT267	SPACER PLATE	362.66
PLT301A	VALV PLATE ASSY RH	356.72
PLT302A	VALV PLATE ASSY RH	339.73
PLT304A	VALV PLATE ASSY LH	330.83
PLT305A	VALVE PLATE ASSY LH	242.04
PLT310A	VALVE PLATE ASSY LH	333.48
PLT311A	VALVE PLATE ASSY LH	328.06
PLT312A	VALV PLATE ASSY LH	256.63
PLT313A	VALV PLATE ASSY LH	251.54
PLT317A	VALVE PLATE ASSY	115.62
PLT318A	SEE PLT2002A	.00
PLT322	SPACER PLATE LH	264.86
PLT503A	VALVE PLATE ASSY	375.09
PLT507A	VALV PLATE ASSY RH	599.11
PLT508A	VALV PLATE ASSY RH	566.45
PLT509A	VALV PLATE ASSY LH	404.39
PLT585A	VALV PLATE ASSY LH	480.08
PLT586A	VALV PLATE ASSY RH	488.87
PLT64A	VALVE PLATE ASY	251.94
PLT85A	VALVE PLATE ASSY	93.80
PLT959A	VALVE PLATE ASSY	128.91
PLT960A	VALVE PLATE ASSY	159.53
PLT963A	VALVE PLATE ASSY	216.68
PLT964A	VALVE PLATE ASSY	160.62
PLU23	ORIFICE PLUG	5.78
PLU5	MAGNET PIPE PLUG	3.66
PLU9	PLUG CAP CONT	46.95
PMP5A	OIL PUMP ASSY	276.90
PMP6A	OIL PUMP ASSY	439.52
PMP85A	OIL PUMP	166.22
PST100A	UNL PISTON ASSY	98.06
PST106AT1	PISTON W/PIN/RNGS	77.68
PST106T1	PISTON W/PIN	61.60

PART NUMBER	DESCRIPTION	LIST PRICE
PST16A	PISTON ASSY	54.10
PST19A	PISTON ASSY	48.73
PST21A	PISTON ASSY	62.51
PST22A	PISTON ASSY	89.86
PST25A	PISTON ASSY	38.11
PST38A	SEE ASY864	.00
PST51A	SEE ASY862	.00
PST54A	PISTON ASSY	68.41
PST57AT1	PISTON W/PIN/RNGS	80.80
PST57T1	PISTON W/PIN	44.00
PST58AT1	PISTON ASSY/PIN/RNG	65.64
PST58T1	PISTON W/PIN	62.84
PST63T1	PISTON W/PIN	81.07
PST63AT1	PISTON ASSY	93.76
PST64	SEE PST106T1	.00
PST64A	SEE PST106AT1	.00
PST65AT1	PISTON W/PIN/RNGS	159.04
PST65T1	PISTON W/PIN	122.16
PST68	PISTON	27.25
PUS15	TERM PUST SEE GA1377	FACTORY
RF2MB42	SEE 2MB42	.00
RF330B42	GASKET	1.55
RF500P95	SEE RF50095	.00
RF50095	VAL PLT ASY RF500P95	168.39
RF65042	SEE 650842	.00
RF650P95	SEE RF65095	.00
RF65095	VAL PLT ASY RF650P95	178.27
RNG101T1	OIL SCRAPER RING	4.83
RNG102T1	COMPRESSION RING	2.54
RNG112	RING	2.05
RNG116	RING	2.41
RNG120	RING	2.05
RNG15	PISTON RING	5.52
RNG16	PISTON RING	5.52
RNG17	PISTON RING	5.52
RNG18	PISTON RING	3.56
RNG19	PISTON RING	5.52
RNG195A	UNL PISTON RING	39.40
RNG20	PISTON RING	5.52
RNG201A	UNL PISTON RING	39.40
RNG21	PISTON RING	5.52
RNG22	PISTON RING	5.52
RNG220	O RING 0458P37	2.29
RNG23	PISTON RING	5.52
RNG24	PISTON RING	6.28
RNG25	PISTON RING	5.52
RNG26	PISTON RING	5.52
RNG27	PISTON RING	5.52
RNG28	PISTON RING	5.52
RNG29	PISTON RING	5.52
RNG292	O RING	2.20
RNG31	RING	4.59
RNG37	COMP RING	2.37
RNG39	OIL RING	4.24
RNG45	COMP RING	3.56
RNG46	OIL RING	2.96
RNG66	OIL RETAIN RING	43.14
RNG67	OIL RETAINING RING	169.67
RNG72T1	COMPRESSION RING	2.20
RNG73T1	OIL SCRAPER RING	3.31
RNG89	RING	1.70
RNG92	RING	1.87
RTR15A	DISC RETAINER ASSY	244.34
RTR22	PISTON PIN RETAINER	4.89
RTR25	RETAINER	1.23
ROD10	PISTON ROD	72.41
ROD14	ROD UNLDR	38.96
ROD21A	CONN ROD ASSY	128.60
ROD24A	CONN ROD ASSY	200.95
ROD42A	CONN ROD ASSY	123.35

PART NUMBER	DESCRIPTION	LIST PRICE
ROD43	CONN ROD	113.58
ROD48A	CONN ROD ASSY	170.60
ROD50	CONN ROD	41.65
ROD72	CONNECTING ROD	108.37
ROD73	CONNECTING ROD	107.95
ROD74	CONNECTING ROD	122.11
ROD75	CONNECTING ROD	121.60
ROD79	CONN ROD	56.66
R2002P970	GASKET SET	20.01
R5002P970	GASKET SET	31.08
SCR121	COV SCR & NO	1.40
SCR18	SOCKET HD CAP	1.40
SCR30	SCREW	.42
SCR31	SCREW	.42
SCR69	SCREW 0533P09	.42
SEL1A	SEE KIT344	.00
SEL3A	SHAFT SEAL ASSY	140.21
SEL4A	SEAL ASSY	174.53
SEL6	SEAL OIL CONT	55.52
SET1	GASKETS COMP SET	152.81
SET10	RING SET COMP	30.25
SET11	RING SET COMP	40.46
SET12	RING SET COMP	50.37
SET13	RING SET COMP	26.80
SET14	RING SET COMP	35.70
SET16	RING SET COMP	53.51
SET17	RING SET COMP	71.40
SET18	RING SET COMP	89.21
SET19A3	HEAD GASKET SET	31.95
SET19A4	HEAD GASKET SET	37.06
SET19A5	HEAD GASKET SET	54.06
SET2	GASKETS COMP SET	183.17
SET20B3	HEAD GASKET SET	32.14
SET20B4	HEAD GASKET SET	23.28
SET20B5	HEAD GASKET SET	46.13
SET21B10	HEAD GASKET SET	71.66
SET21B6	HEAD GASKET SET	52.46
SET21B8	HEAD GASKET SET	63.95
SET3	GASKETS COMP SET	131.97
SET4	GASKETS COMP SET	85.39
SET44	GASKETS COMP SET	93.11
SET45	GASKETS COMP SET	102.15
SET46	GASKETS COMP SET	115.86
SET47	GASKETS COMP SET	120.76
SET5	GASKETS COMP SET	94.64
SET53	PISTON RING SET	7.72
SET54	PISTON RING SET	8.73
SET6	GASKETS COMP SET	106.25
SET7	GASKETS COMP SET	110.07
SET8	GASKETS COMP SET	114.48
SET9	GASKETS COMP SET	125.93
SE61742	GASKET	2.76
SE81142	GASKET	5.28
SHF11	SHAFT	273.14
SPC14	CRANKSHAFT SPACER	14.67
SPC15	CRANKSHAFT SPACER	30.95
SPG31	UNLOADER SPRING LNK	.82
SRA10	OIL CONTROL SCREEN	.60
SRA18	OIL STRAINER	75.87
SRA19C	OIL STRAINER	63.30
SRA20	SUCTION STRAINER	144.24
SRA21	SUCTION STRAINER	245.76
SRA22	SUCTION STRAINER	242.02
SRA27	SUCTION STRAINER	51.65
SRA29	USE FLR29	.00
SRA32	OIL STRAINER	46.95
SRP2	PISTON ROD	68.24
SRP3	PISTON ROD	74.14
SRP4	PISTON ROD	69.70
SRP5	PISTON CONNECT ROD	160.75

PART NUMBER	DESCRIPTION	LIST PRICE
THT3	THERMOSTAT	18.95
TMR65	TIMER	68.69
TMR66	TIMER	62.81
TUB2057T1	TUBING	20.08
TUB2058T1	TUBING	25.93
TUB2059	TUBING	18.59
TUB2060	TUBING	26.27
TUB2061	TUBING	19.71
TUB2062	TUBING	26.27
TUB2433	OIL EQUALL TUBE	25.57
VAL161	VALVE	102.31
VAL258	OIL RELIEF VALVE	14.47
VAL260	VALVE DISC	4.32
VAL357	UNL SHUTTLE VALVE	328.85
VAL361	DISC SERVICE VALVE	25.09
VAL362	DISC SERVICE VALVE	33.44
VAL363	SUCT SERVICE VALVE	28.39
VAL365	VALVE SUCT	1.40
VAL372	DISC SERVICE VALVE	77.85
VAL373	DISC SERVICE VALVE	49.80
VAL374	SUCT SERVICE VALVE	50.18
VAL381	DESUPERHEAT VALVE	236.17
VAL438	UNL SOLENOID VALVE	113.10
VAL496	FUAM CONT VALVE	10.83
VAL53	SUCTION LINE VALVE	209.52
VAL54	SUCTION LINE VAL	198.55
VAL557	DESUPERHEAT VALV R12	119.09
VAL559	DESUPERHTG VALV R220	116.65
VAL56	SUCTION LINE VALVE	448.46
VAL57	SUCTION LINE VALVE	295.03
VAL58	SUCTION LINE VALVE	424.16
VAL59	DISC LINE VALVE	132.38
VAL615	SUCT SERV VALV	38.52
VAL616	SUCT SERV VALV	40.66
VAL71	PRESSURE RELIEF VAL	37.45
VAL72	PRESSURE RELIEF VAL	67.88
VAL83	DISCH SERV VALVE	133.71
WAS20	THRUST WASHER	24.01
WAS21	THRUST WASHER	48.17
WAS22	WASHER MOTOR	20.10
WAS23	WASHER MOTOR	4.82
WAS30	SPLINE WASHER	6.83
WAS34	WAVY WASHER	1.78
WAS35	WAVY WASHER	3.56
WAS36	THRUST WASHER	17.55
WAS37	ROTOR LOCK WASHER	5.61
WAS75	WASHER	.68
WAS88	ROTOR LOCK WASHER	7.12
010P01	LOCKWASHER	.42
010P203	BRASS NUT	.53
0102G27	PIN	.42
011P09	BOLT	.53
011P10	BOLT	.53
011P11	SCREW	.42
011P13	BOLT	.53
011P17	BOLT	.53
011P19	BOLT	.53
011P29	BOLT	.53
012P11	BOLT CYL TO CRNK	.53
012P13	SCREW	.42
012P15	CAP SCR 3/8 16X1 1/2	.53
012P19	SCREW	.42
012P216	LOCKWASHER	.68
012P23	CAP SCR 3/8 16X2 1/2	.53
012P27	SCREW	.42
012P31	BOLT	.68
012P33	BOLT 3/8 16X3 3/4 LG	.85
012P37	BOLT 3/8 16X4 1/4 LG	1.47
012P43	CAP SCR 3/8 16X5	1.16
014P01	WASHER	.53

PART NUMBER	DESCRIPTION	LIST PRICE
014P17	CAP SCR 1/2 13X1 3/4	.68
014P29	SCR ADP 1/2 X 3 1/2	1.14
014P31	CAP SCR 1/2 13X3 1/2	1.40
016P04	LOCKWASHER	.53
016P15	BOLT 5/8 11X1 1/2 LG	.98
016P35	CAP SCR	1.27
016P47	CAP SCREW 5/8 11X5 1	2.59
0161P210	NUT LOCK SCREW	.68
0162P00	NUT	.63
017P04	WASHER	.68
0212P02	CAP-ELBOW	.63
028P07	BOX SCR & NO	.53
028P17	BOX SCR & NO	.53
034P10	SCREW-OIL PMP	.42
0341P13	SCR FLG 5/16 X 1/2	.68
0346P19	SCR VAL 1/2 X 2	1.40
035P24	OIL PLUG	.68
0386P03	TEE	4.01
0413G03	SEE CPR18	.00
0413G04	SEE CPR19	.00
0413G05	SEE CPR20	.00
0413G06	SEE CPR18	.00
0414G03	SEE CPR22	.00
0414G06	SEE CPR23	.00
0458P16	O RING SEAL HOUSING	2.59
0458P17	O RING SEAL HOUSING	2.63
0458P20	O RING-USE RNG 292	.00
0458P29	O RING	2.59
0458P34	USE 0458P35	.00
0458P35	RING	2.88
0458P37	SEE RNG220	.00
050148A1	OIL CONT ASSY ASY230	26.36
051P36	CONNECTOR	4.03
051P52	CONNECTOR	2.59
0533P09	SEE SCR69	.00
055P02	PLUG	.42
055P61	PLUG	.42
055P62	PLUG	1.40
055P70	PIPE PLUG	.68
055P71	PLUG	1.75
055P80	PLUG	1.92
0580P11	RETAINER RING	.53
0580P15	RETAINER RING	.53
0580P21	RETAINER RING	.53
0580P23	RETAINER RING	.68
0581P16	RETAINER RING	.65
0581P21	RETAINER RING	5.20
0582A05	SCREW	5.20
0609P45	VALVE	36.74
0609P55	PRES RELIEF VALVE	54.54
0609P75	DISCH PRESS REL VAL	64.66
065P05	SCREW OIL SCREEN	.68
065P29	DRIVE SCREW	.53
065016	SEE A650816	.00
066P03	KEY LOCK SHAFT	2.04
066P03	KEY	2.04
066P18	KEY	2.12
066P29	KEY	1.36
066P30	KEY	1.53
066P58	KEY LOCK	.63
0693P00	RETAINER	.45
0693P01	RETAINER	.56
0694P00	OIL DRAIN VALV ADAP	3.73
072P01	ELBOW	2.59
072P02	ELBOW	2.68
1-10MP968	RING SET	39.77
10MA66	PIN	28.62
10MB510	BODY	4.19
10M437	SEAL	126.60
100P135	OIL DRAIN VALVE	13.06
12MP968	RING SET	56.99
125P006	THRUST BALL	1.40
1250816	GASKET	2.15
135A75	BEARING PLUG	6.75
135A77	THRUST DIS	6.22
13579	GASKET	1.60
140A185	OIL CONT FLAPPER	4.04
140A333	OIL CHAMB PLATE	2.63
140B21	ECCENTRIC	101.59
140B22	PISTON ROD	40.87
140B42	GASKET	2.31
140C394	CYLINDER	186.78
140P06	THRUST BALL	.53
140P192	SEE VAL361	.00
140P968	RING SET	32.57
140P970	GASKET SET	10.17
2MA185	OIL CONT FLAPP	2.59
2MA195	SEE 2000195	.00
2MB150	BEAR PLUG END	26.25
2MB151	BEAR SEAL END	28.33

PART NUMBER	DESCRIPTION	LIST PRICE
2MB42	GASKET RF2MB42	1.88
2MB48	SEE 200048	.00
2MB53	NUT	29.81
2MB75	BEARING PLUG	11.60
2MB93	SEE WAS30	.00
2MB94	NUT LOCKING	6.75
2MC762	CYLINDER	419.93
2MD169	HEAD	128.83
2MP968	RING SET	42.92
2M966	BRGSET 2MB150/2MB151	57.58
20MA728	SIGHTGLASS COV PLATE	3.12
20MB87	GASKET	2.59
20M691	SEE 20000A691	.00
200P135	VALVE	16.99
2000B445	END PLATE GASKET	1.40
20000A691	SIGHTGLASS GKT20M691	.53
2000195	PLATE COVER 2MA195	11.11
2000437	SEAL	83.53
200048	GASKET 2MB48	1.62
200079	GASKET	1.78
2001A428	GASKET OIL SCREEN	.68
2001A612	SIGHTGLASS	7.84
2001A613	SIGHTGLASS	2.88
2002P971	BEARING PLUG	20.06
25P135	VALVE	10.76
330A16	GASKET CRNK TO CYL	2.62
330B437	SEAL ASSY	81.92
330B458	SHAFT	173.50
330B48	GASKET	.59
330B50	HEAD	36.73
330B82	GASKET	.64
330C394	CYLINDER	269.44
330P192	SEE VAL362	.00
330P874	OIL RING	4.59
330P876	RING	3.63
330P968	RING SET	23.56
330P970	GASKET SET	11.70
330445	GASKET	1.40
40MA613	GASKET	2.29
40MA691	GASKET	2.44
40MA78	GASKET	6.83
40MC16	GASKET	7.34
40M437	SEAL ASY	225.05
40M48	GASKET	8.75
40M966	BRSET40MA150/40MA151	391.86
40M970	GASKET SET	96.69
500A75	BEARING PLUG	15.12
500B16	GASKET	1.75
500B437	SEAL ASSY	75.05
500B458	SHAFT	68.38
500B48	GASKET	2.76
500C394M	CYLINDER	183.51
500P875	RING	6.36
500P968	RING SET	34.90
500P970	GASKET SET	20.06
50008445	GASKET SEAL ASSY	3.14
500082	GASKET	.85
500187	SUCTION SCREEN	5.26
5002A397	SUCTION SCREEN	15.62
5002A488	PLATE COVER	17.46
5002A66	PIN	11.11
5002P874	RING	7.75
5002P875	RING	7.75
5002P876	RING	7.75
50079	GASKET	5.34
5301B48	GASKET	3.22
650B150	BEARING	35.45
650B151	BEAR SEAL END	15.08
650B42	GKT CYL/VLPL RF65042	1.55
650B48	GASKET	3.82
650B53	LOCK NUT ECCENTRICP	13.91
650B93	SPLINE WASHER	4.72
650B94	LOCK NUT ECCENTRIC	6.11
650C04	SHAFT	251.58
650C21	ECCENTRIC	142.90
650C50	HEAD	93.33
650P875	RING	3.29
650P966	BRSET650B150/650B151	68.77
650P968	RING SET	31.08
650P970	GASKET SET	12.04
650437	SEAL ASSY	72.50

427

Exhibit D-6

DUNHAM-BUSH

PCX/DBX CONSOLIDATED PARTS PRICE LIST

Refer to latest revision of Form 1278 for Terms of Sale.

Terms of Shipment: F.O.B. Shipping Point.

All prices subject to change without notice.

Parts will be invoiced at prices in effect at the time of shipment.

All components and controls listed are for standard units only, unless otherwise noted.

Minimum Billing is $25.00.

ORDERING INSTRUCTIONS

1. When ordering, specify Model, Serial No., "X" No., and other pertinent information on the face of the order.
2. Parts selections should be made from the "RPL" furnished with the unit where possible. For convenience, we have included several pages listing field replacement kits with a brief description of each at the back of this form.
3. Send all orders to: Dunham-Bush, Inc., Service Parts Dept.
   179 South St., West Hartford, Conn. 06110
4. All prices are for one each part or kit as applicable.
5. Federal, state, local or other taxes are not included in the attached prices.
6. All orders requiring Special Handling, will have a $50 net additional charge invoiced or actual cost, whichever is higher. This includes delivery to the airport, bus station, etc.

436

PART NO.	DESCRIPTION	LIST PRICE
BKR74	CIRCUIT BREAKER	28.62
BKR75	CIRCUIT BREAKER	28.62
BLK41	DRIER BLOCK	59.57
BLK42	DRIER BLOCK	23.59
CNT55	CONTROL, TEMP	70.18
CNT137T1	CONTROL, MTR PRT	100.17
CNT167	CONTROL, LOW PRESS	69.22
CNT175	CONTROL, DUAL PRESS	88.03
CNT206	CONTROL, TEMP	63.55
CNT208	CONTROL, TEMP	1,020.13
CNT231	CONTROL, TEMP	87.82
CNT232	CONTROL, TLC	963.31
CNT233T1	CONT SENR 35/55DEG	101.28
CNT233T2	CONT SENR 55/75DEG	241.88
CNT233T3	CONT SENR=35/-15DEG	223.71
CNT233T5	CONT SENR=15/10DEG	258.84
CNT233T5	CONT SENSR 10/35DEG	258.84
CNT242	CONTROL, LOW PRESS	64.13
CNT244	CONTROL, TEMP	67.89
CNT249	CONTROL, PRESS-DIFF	514.00
CNT276	CONTROL, PRESS	274.06
CNT277	CONTROL, PRESS	592.60
COL122T1	COIL 120V	28.62
COL122T40	COIL 120V	28.62
COL122T41	COIL 24V	28.62
COL123T1	COIL 120V	33.39
FLR47A	FILTER, SUCTION	87.42
FLR48A	FILTER, SUCTION	125.95
FLR49A	FILTER, SUCTION	102.78
FLR71	FILTER, OIL	22.79
FLR95T1	FILTER, SUCTION 4	243.28
FLR95T2	FILTER, SUCTION 5	307.33
FLR95T3	FILTER, SUCTION 8	390.80
FLR107T1	FILTER, OIL	400.88
FLR107T2	FILTER, OIL	489.70
FLR125	FILTER, OIL	36.06
GAG40	GAUGE	34.19
GAG41	GAUGE	34.19
GAG52	GAUGE	99.38
GKT143	GASKET	15.42
GKT222	GASKET	20.50
GKT223	GASKET	15.70
GKT224	GASKET	6.54
GKT229	GASKET	5.14
GKT238	GASKET	.60
GKT242	GASKET	17.56
GKT243	GASKET	24.38
GKT248	GASKET	5.95
GKT250	GASKET	2.73
GKT252	GASKET	7.02
GKT257	GASKET	4.61
GKT258	GASKET	3.34
GKT259	GASKET	25.05
GKT260	GASKET	27.78
GKT261	GASKET	21.37
GKT265	GASKET	40.07
GKT266	GASKET	16.70
GKT267	GASKET	2.87
GKT269	GASKET	1.34
GKT279	GASKET	52.15
GKT280	GASKET	52.15
GKT313	GASKET	21.43
GKT314	GASKET	5.54
GKT318	GASKET	13.70
GKT329	GASKET	1.40
GKT334	GASKET	3.68
GKT350T1	GASKET	15.62
GKT350T2	GASKET	21.23
GKT350T3	GASKET	40.07
GKT350T4	GASKET	33.59
GKT350T5	GASKET	36.67
GKT380	GASKET	8.15
GKT382	GASKET	18.09
GKT383	GASKET	8.75
GKT387	GASKET	21.71
GKT415	GASKET	10.48
GKT416	GASKET	9.41
GKT417	GASKET	8.75
GKT427	GASKET	30.05
GKT429T1	GASKET	70.12
GKT429T2	GASKET	70.12
GKT431T1	GASKET	55.43
GKT431T2	GASKET	52.43
GKT433T1	GASKET	61.78
GKT433T2	GASKET	61.78
GKT435T1	GASKET	80.80
GKT435T2	GASKET	80.80
GKT446	GASKET	14.09
GKT447	GASKET	14.89
GKT448	GASKET	12.36
GKT466	GASKET	11.35
GKT467	GASKET	11.62
GKT468	GASKET	11.09
GKT503	GASKET	83.48

PART NO.	DESCRIPTION	LIST PRICE
GKT504	GASKET	89.16
GKT505	GASKET	101.84
GKT506	GASKET	111.86
GKT507	GASKET	115.20
GKT508	GASKET	81.20
GKT509	GASKET	86.81
GKT510	GASKET	100.17
GKT511	GASKET	110.19
GKT512	GASKET	113.53
GKT117	GASKET	1.20
GLS16A	SIGHT GLASS ASSY	38.00
HTR71	HEATER, OIL	134.43
IDR48	INDICATOR, LIQ 5/8	21.78
IDR49	INDICATOR, LIQ 7/8	21.78
IDR56A	IND ASSY, LESS SCALE	170.89
IDR57A	IND ASSY, LESS SCALE	183.51
KIT250	KIT, CAM SWITCH	59.96
LMP10	LIGHT, RED	10.60
LMP11	LIGHT, YELLOW	10.60
LMP12	LIGHT, WHITE	10.60
LMP13	LIGHT, WHITE	9.06
LMP14	LIGHT, AMBER	13.04
LMP15	LIGHT, RED	11.50
PMP91T3	PUMP, OIL VIKING	1,444.99
PMP91T4	PUMP, OIL VIKING	1,689.59
PMP91T6	PUMP, OIL VIKING	2,212.64
RLY126	RELAY	140.77
RLY127	RELAY	193.50
RLY129	RELAY	99.22
RLY133	RELAY	19.29
RLY134	RELAY	27.40
RLY135	RELAY FLIP PACK	145.75
RNG104	RING	2.20
RNG129	RING	30.98
RNG130	RING	23.11
RNG13	RING	32.39
RNG132	RING	32.52
RNG135	RING	1.06
RNG136	RING	7.53
RNG144	RING	5.09
RNG145	RING	4.56
RNG146	RING	5.09
RNG147	RING	7.37
RNG148	RING	3.07
RNG162	RING	40.07
RNG164	RING	17.36
RNG165	RING	4.67
RNG166	RING	1.96
RNG167	RING	1.01
RNG170	RING	42.88
RNG173	RING	31.59
RNG181	RING	28.92
RNG182	RING	19.71
RNG202	RING	2.23
RNG203	RING	24.17
RNG204	RING	.21
RNG205	RING	2.44
RNG206	RING	1.86
RNG207	RING	3.23
RNG209	RING	4.45
RNG210	RING	3.02
RNG211	RING	3.66
RNG217T3	RING	7.10
RNG217T4	RING	99.85
RNG217T5	RING	193.34
RNG229	RING	41.18
RNG230	RING	1.27
RNG236	RING	.95
RNG237	RING	.80
RNG238	RING	.95
RNG239	RING	.80
RNG255	RING	1.70
RNG256	RING	.69
RNG275	RING	.42
RNG282T2	RING	3.60
RNG283T3	RING	5.19
RNG283T4	RING	3.98
RNG293	RING	.42
RNG294T1	RING	5.57
SRA46T1	STRAINER, OIL	66.78
SRA52	STRAINER, OIL	43.99
SRA64A	STRAINER ASSY, OIL	FACTORY
SRA79A	STRAINER ASSY, OIL	FACTORY
SRA80A	STRAINER ASSY, OIL	FACTORY
SWT61	SWITCH, FLOW	104.78
SWT71	SWITCH, AUX	6.89
SWT80	SWITCH, PRESS-DIFF	422.30
SWT82	SWITCH	42.98
SWT83	SWITCH	16.96
SWT89	SWITCH, REED	41.27
SWT91	SWITCH	56.94
TMR79	TIMER, ELAPSED	20.78
TMR83	TIMER	351.92
TMR103	TIMER	162.88

PART NO.	DESCRIPTION	LIST PRICE
TMR105	TIMER	58.41
TMR106	TIMER	489.72
TMR110	TIMER	73.60
TMR114	TIMER	160.80
TMR135	TIMER	64.55
TOL1	TOOL,INNER LKNUT 163	298.18
TOL2	TOOL,INNER LKNUT 204	292.17
TOL3	TOOL,INNER LKNUT 255	440.00
TOL4	TOOL,LOCKNUT SPINDLE	170.29
TOL5	TOOL,BEARING LOCKNUT	1,402.38
TOL6	TOOL,OUTER NUT 163	292.17
TOL7	TOOL,OUTER NUT 204	347.26
TOL8	TOOL,OUTER NUT 255	466.00
TOL9	TOOL,SLIPPER SEAL	176.00
TOL10	TOOL,SEAL ASSY	188.00
TOL11T1	TOOL,SEAL ASSY	834.75
TOL11T2	TOOL,SEAL ASSY	1,101.87
TOL11T3	TOOL,SEAL ASSY	1,480.00
TOL11T4	TOOL,SEAL ASSY	1,402.38
TOL12	TOOL,SLIDE VALVE	1,080.00
TOL13	TOOL,BUSHING	26.04
TOL14	TOOL,STATOR PULLER	387.32
TOL15	TOOL,THRUST BRG	357.27
TOL16T1	TOOL,COLLAR ASSY 163	294.23
TOL16T2	TOOL,COLLAR ASSY	227.05
TOL16T3	TOOL,COLLAR ASSY	293.83
TOL17	TOOL,TORQUE WRENCH	1,402.38
TOL18	TOOL,TORQUE WRENCH	1,402.38
TOL19	TOOL,TORQUE WRENCH	645.00
TOL20	TOOL,SPIND GAGE PLUG	380.00
TOL22	TOOL,AIR CYL ADJ	1,035.09
TOL23T1	TOOL,MOTOR HOOK	934.92
TOL23T2	TOOL,MOTOR HOOK	934.92
TOL24	TOOL,SLIPPER SEAL	160.27
TSF26	TRANSFORMER	23.69
VAL388	VALVE,CHECK	32.70
VAL448	VALVE,WATER REGULATR	680.49
VAL449	VALVE,WATER REGULATR	961.10
VAL454	VALVE TX	119.73
VAL456	VALVE,GLOBE	9.12
VAL460	VALVE,TX	588.41
VAL486	VALVE,TX	1,337.56
VAL488	VALVE,SOLENOID	46.64
VAL494	VALVE,TX	622.27
VAL509A	VALVE ASSY, UNLOAD	441.55
VAL537	VALVE,TX	660.86
VAL536	VALVE,TX	887.11
VAL539	VALVE,TX	583.53
VAL547	VALVE,GLOBE	21.71
VAL585	VALVE, TX	887.11
VAL676	VALVE, TX	119.73
VAL691T1	VALVE, TX	307.93
VAL691T2	VALVE, TX	451.96
VAL691T3	VALVE, TX	451.98
VAL691T4	VALVE, TX	470.83
VAL691T5	VALVE,TX	470.83
VAL691T6	VALVE,TX	392.36
VAL720	VALVE,PRESS REG	257.79
VAL726	VALVE,CHECK	691.12
VAL727	VALVE,CHECK	622.80
VAL734T1	VALVE,RELIEF	81.46
VAL734T2	VALVE,RELIEF	81.46
VAL734T3	VALVE,RELIEF	81.46
VAL735T1	VALVE,RELIEF	117.98
VAL735T2	VALVE,RELIEF	111.30
VAL735T3	VALVE,RELIEF	117.98
VAL769	VALVE,PRESS REGULATR	213.86
VAL784	VALVE,PRESS REGULATR	429.94
VAL820	VALVE,TX	1,284.24
VAL833	VALVE,PRESS REGULATR	259.81
VAL902T1	VALVE,SOLENOID	130.06
VAL902T3	VALVE,SOLENOID	193.13
VAL902T10	VALVE,SOLENOID	78.65
VAL919	VALVE,TX	205.64
XFRK4T1	OIL PUMP ASSY 208V	FACTORY
XFRK4T2	OIL PUMP ASSY 230V	FACTORY
XFRK4T3	OIL PUMP ASSY 460V	FACTORY
XFRK5	OIL PUMP CONV KIT	FACTORY
XFRK7T2	FLD REP KIT SHF SEAL	849.06
XFRK7T4	FLD REP KIT SHF SEAL	983.66
XFRK7T6	FLD REP KIT SHF SEAL	973.08
XFRK7T7	FLD REP KIT SHF SEAL	1,013.36
XFRK7T8	FLD REP KIT SHF SEAL	1,131.02
XFRK7T9	FLD REP KIT SHF SEAL	1,719.32
XFRK7T10	FLD REP KIT SHF SEAL	1,631.34
XFRK7T11	FLD REP KIT SHF SEAL	1,933.44
XFRK7T12	FLD REP KIT SHF SEAL	1,335.60
XFRK7T14	FLD REP KIT SHF SEAL	1,425.70
XFRK7T15	FLD REP KIT SHF SEAL	1,219.00
XFRK7T16	FLD REP KIT SHF SEAL	1,257.16
XFRK7T17	FLD REP KIT SHF SEAL	1,232.78
XFRK7T18	FLD REP KIT SHF SEAL	1,587.88
XFRK7T19	FLD REP KIT SHF SEAL	1,219.00
XFRK7T20	FLD REP KIT SHF SEAL	975.20

PART NO.	DESCRIPTION	LIST PRICE
XFRK7T21	FLD REP KIT SHF SEAL	828.92
XFRK7T22	FLD REP KIT SHF SEAL	1,344.08
XFRK7T23	FLD REP KIT SHF SEAL	1,110.88
XFRK7T24	FLD REP KIT SHF SEAL	1,948.28
XFRK7T25	FLD REP KIT SHF SEAL	1,871.96
XFRK7T26	FLD REP KIT SHF SEAL	2,028.84
XFRK7T27	FLD REP KIT SHF SEAL	1,570.92
XFRK7T28	FLD REP KIT SHF SEAL	1,961.00
XFRK8T30	KIT,GASKET 163OD	323.01
XFRK8T31	KIT,GASKET 163HER	324.35
XFRK8T32	KIT,GASKET 204OD	203.54
XFRK8T33	KIT,GASKET 204HER	251.90
XFRK8T34	KIT,GASKET 255OD	309.72
XFRK8T35	KIT,GASKET 255HER	408.49
XFRK10T1	SEE PG 5 FOR DESCRIP	56.56
XFRK10T2	SEE PG 5 FOR DESCRIP	51.95
XFRK10T3	SEE PG 5 FOR DESCRIP	46.01
XFRK10T4	SEE PG 5 FOR DESCRIP	66.58
XFRK10T5	SEE PG 5 FOR DESCRIP	61.90
XFRK10T6	SEE PG 5 FOR DESCRIP	56.03
XFRK10T7	SEE PG 5 FOR DESCRIP	77.44
XFRK10T8	SEE PG 5 FOR DESCRIP	64.91
XFRK10T9	SEE PG 5 FOR DESCRIP	62.11
XFRK10T10*		99.04
XFRK11	FLD REP KIT,OIL F SW	536.85
XFRK19T1	FLDREP KIT,TLC35/55D	939.86
XFRK19T2	FLDREP KIT,TLC10/35D	990.02
XFRK19T3	FLDRP KIT,TLC-15/10D	981.87
XFRK19T4	FLDREPKITTLC-35/-15D	1,044.30
XFRK20T1	FLDREPKIT,TLC 35/55D	1,027.14
XFRK20T2	FLDREPKIT,TLC 10/35D	1,096.59
XFRK10T3	FLDREPKIT,TLC-15/10D	1,088.45
XFRK20T4	FLDREPKIT,TLC-35/-15	1,131.59
XFRK20T5	FLDREPKIT,TLC-55/-35	1,141.61
XFRK24T1	SEE PAGE5 FOR DESCR	1,093.25
XFRK24T2	SEE PAGE5 FOR DESCR	931.05
XFRK24T3	SEE PAGE5 FOR DESCR	1,016.25
XFRK24T4	SEE PAGE5 FOR DESCR	1,028.88
XFRK24T5	SEE PAGE5 FOR DESCR	1,209.39
XFRK24T6	SEE PAGE5 FOR DESCR	1,171.38
XFRK24T7	SEE PAGE5 FOR DESCR	1,021.67
XFRK24T8	SEE PAGE5 FOR DESCR	988.81
XFRK24T9	SEE PAGE5 FOR DESCR	1,090.32
XFRK24T10	SEE PAGE5 FOR DESCR	1,249.66
XFRK24T11	SEE PAGE5 FOR DESCR	1,178.80
XFRK24T12	SEE PAGE5 FOR DESCR	1,261.15
XFRK24T13	SEE PAGE5 FOR DESCR	1,142.34
XFRK25T1	FLDREPLKIT,REED SWIT	254.63
XFRK25T2	FDREPKIT,REEDSWTCAM	497.38
XFRK27T1*	SEE PAGE 5 FOR DESCR	1,332.87
XFRK27T2*	SEE PAGE 5 FOR DESCR	994.15
XFRK27T3	SEE PAGE 5 FOR DESCR	1,677.85
XFRK27T5*	SEE PAGE 5 FOR DESCR	3,057.53
XFRK27T6*	SEE PAGE 5 FOR DESCR	2,364.21
XFRK27T11	SEE PAGE 5 FOR DESCR	1,832.64
XFRK27T12	SEE PAGE 5 FOR DESCR	1,587.42
XFRK27T13	SEE PAGE 5 FOR DESCR	2,349.32
XFRK27T15	SEE PAGE 5 FOR DESCR	3,917.84
XFRK27T16	SEE PAGE 5 FOR DESCR	3,173.06
XFRK28	F R KIT,MTR HTR 255	286.83
XFRK29	F R KIT,MTR HTR 204	205.68
XFRK30	F R KIT,MTR HTR 163	204.21
XFRK31T1	SEE PAGE 5 FOR DESCR	1,066.15
XFRK31T2	SEE PAGE 5 FOR DESCR	4,171.88
XFRK31T3	SEE PAGE 5 FOR DESCR	1,038.77
XFRK31T4	SEE PAGE 5 FOR DESCR	4,163.00
XFRK31T5	SEE PAGE 5 FOR DESCR	1,031.75
XFRK31T6	SEE PAGE 5 FOR DESCR	4,323.60
XFRK31T7	SEE PAGE 5 FOR DESCR	1,128.25
XFRK31T8	SEE PAGE 5 FOR DESCR	4,420.43
XFRK31T9	SEE PAGE 5 FOR DESCR	1,189.09
XFRK31T10	SEE PAGE 5 FOR DESCR	4,472.99
XFRK31T11	SEE PAGE 5 FOR DESCR	1,294.00
XFRK31T12	SEE PAGE 5 FOR DESCR	5,573.46
XFRK31T13	SEE PAGE 5 FOR DESCR	1,201.04
XFRK31T14	SEE PAGE 5 FOR DESCR	5,492.05
XFRK31T15	SEE PAGE 5 FOR DESCR	1,328.66
XFRK31T16	SEE PAGE 5 FOR DESCR	5,619.34
XFRK31T17	SEE PAGE 5 FOR DESCR	1,677.38
XFRK31T18	SEE PAGE 5 FOR DESCR	6,015.54
XFRK31T21	SEE PAGE 5 FOR DESCR	1,046.11
XFRK31T22	SEE PAGE 5 FOR DESCR	3,743.89
XFRK31T23	SEE PAGE 5 FOR DESCR	1,018.73
XFRK31T24	SEE PAGE 5 FOR DESCR	3,734.94
XFRK31T26	SEE PAGE 5 FOR DESCR	3,788.16
XFRK31T28	SEE PAGE 5 FOR DESCR	3,885.00
XFRK31T30	SEE PAGE 5 FOR DESCR	3,937.55
XFRK31T32	SEE PAGE 5 FOR DESCR	4,814.57
XFRK31T34	SEE PAGE 5 FOR DESCR	4,733.10
XFRK31T36	SEE PAGE 5 FOR DESCR	4,860.39
XFRK31T38	SEE PAGE 5 FOR DESCR	5,256.66
XFRK32	SEE PAGE 5 FOR DESCR	222.31
XFRK33T1	SEE PAGE 5 FOR DESCR	153.27
XFRK33T2	SEE PAGE 5 FOR DESCR	341.25

438

PART NO.	DESCRIPTION	LIST PRICE
XFRK33T3	SEE PAGE 5 FOR DESCR	233.33
XFRK33T4	SEE PAGE 5 FOR DESCR	654.04
XFRK42	F R KIT, SLIDE VALVE	27.85
050014A1	IDR CONV 1610A/B	285.01
050014A2	IDR CONV 1615 A/B	270.19
050014A3	IDR CONV 2010	280.07
050014A4	IDR CONV 2013	293.30
050014A5	IDR CONV 2015	290.83
050014A6	IDR CONV 2510	306.19
050014A7	IDR CONV 2515	314.21
050053A1	F R KIT,SEAL 255	1,675.98
050053A2	F R KIT,SEAL 255	1,314.70
050053A3	F R KIT,SEAL 255	1,651.67
050053A4	F R KIT,SEAL 255	1,405.58
050053A5	F R KIT,SEAL 255	1,220.60
050110A2	VALVE,TX	743.53
05011A3	VALVE,TX	701.05
050110A4	VALVE,TX	802.17
050110A5	VALVE,TX	850.25
050110A6	VALVE,TX	1,128.44
050110A7	VALVE,TX	1,146.08
050147A1	LIQ INJ LINE ASSY	1,282.84
050147A2	LIQ INJ LINE ASSY	1,282.84
050155A1	GAUGE	40.74
050156A1	GAUGE	40.74
051066A1	F R KIT,MTR PRUT	105.71
050181A1	RELAY	73.03
050182A1	LAMP	3.66
050182A2	LAMP	3.66
050185A1	LIGHT	12.19
050216A2	VALVE,TX	466.77
050216A4	VALVE,TX	466.77
050266A1	VALVE,TX	166.58
050309A1	CORE, FILTER	22.15
050414A1	VALVE,TX	530.05
050800A1	RELAY,TIME	96.46
0609P65	VALVE RELIEF	38.80
0817610	SIGHT GLASS, LIQUID	24.54
050664A1	SEAL,VIKING PUMP	2.28

Exhibit D-7

DUNHAM-BUSH PRICES

FORM NO. 4632-1F
EFFECTIVE
MARCH 1981
SUPERSEDES 4632-1E

PCX/DBX HERMETIC OIL PUMP REPLACEMENT PARTS PRICE

SELECTION

IF THIS PUMP IS ON THE UNIT	REPLACE IT WITH THIS PUMP & KIT OR KITS	ALSO SEND STRAINER ASSEMBLY
1. PMP 84 (OBSOLETE)	XFRK - 4 XFRK - 5	SELECT PROPER STRAINER FROM TABLE
2. PMP 86T1 (OBSOLETE)		
3. PMP 86T2 (OBSOLETE)		
4. PMP 88A	XFRK - 4	
5. PMP 90T1		
6. PMP 90T2		

PCX-H	120	150	180	230	290	350	400	450	500	580	630	700	750
Strainer	SRA 80A						SRA 79A	SRA 64A					
Oil Sep.	Spool						20"	24"	24"	24"	24"	24"	26"
								SEP – SUMP DIA					
PCX-O	120	150	180	230	290	350	400	450	500	580	630	700	750
Strainer	SRA 79A							SRA 64A					
Oil Sep.	16"	16"	16"	18"	18"	18"	20"	24"	24"	24"	24"	24"	26"
	SEP – SUMP DIA												
DBX	1610	1613	1615	2010	2013	2015							
Strainer	SRA 79A												
Oil Sep.	18"	18"	18"	20"	20"	20"							
	SEP – SUMP DIA												
ARPCX-120													
Strainer	SRA 79A												
Oil Sep.	20"												

PART NUMBER	DESCRIPTION	LIST PRICE See Note (1)
XFRK 4	REPLACEMENT OIL PUMP & GASKETS	$4,090.00
XFRK 5	PIPING CONVERSION KIT	246.00
SRA 64A	STRAINER ASSEMBLY	316.00
SRA 79A	STRAINER ASSEMBLY	274.00
SRA 80A	STRAINER ASSEMBLY	268.00

1. Ordering Instructions: Oil pump order will not be accepted unless it includes the following information:
   a) Oil pump motor voltage, phase, hertz
   b) Complete oil pump nameplate data, including Pump Part No. and Type No.
   c) Complete unit model no.
   d) Complete unit serial no.
   e) Engineering file no. ("X" No.)

2. If out of warranty the following credit will be issued depending on the condition of the returned pump as determined by the West Hartford Quality Control Department.
   a) Current Pump Models

	Credit List Deduct
1) Pump failure (other parts useable)	$1,514.00
2) Motor burnout (other parts useable)	1,293.00
3) Pump and motor failure (Housing and shaft useable)	946.00

   b) Obsolete pump model (No Credit)
   c) Follow RGB Procedure for returning the pump

3. Certain PCX/DBX units may have a special oil pump depending on the application, e.g. an open type pump may be supplied for explosion proof installations, etc. Supply all pump data to West Hartford, Order Service Department. Contact West Hartford Order Service for pricing and delivery.

PRICES AND SPECIFICATIONS SUBJECT TO CHANGE WITHOUT NOTICE.
FOR TERMS OF SALE REFER TO LATEST REVISION OF FORM 1278
PRICES F.O.B. WEST HARTFORD, CONNECTICUT

Exhibit D-8

FORM NO. 17448P
EFFECTIVE
MARCH 1981
SUPERSEDES 17448N

DUNHAM-BUSH

A5, A7, PM7 and A9 CENTRIFUGAL PUMP REPAIR PARTS LIST PRICES

PRICES AND SPECIFICATIONS SUBJECT TO CHANGE WITHOUT NOTICE.
FOR TERMS OF SALE REFER TO LATEST REVISION OF FORM 1278

REFER TO FORM 2505 FOR DESCRIPTION OF PARTS AND NUMBERS

PART NUMBER	LIST PRICE
472	$ 25.05
860	63.10
861	73.40
1112	.70
3179	80.20
3199	103.00
3291	148.00
3292	2.30
3293	2.35
3312	2.30
3313	1.75
A2-51	73.40
A2-672	43.45
A2-3015	45.90
A2-3016	45.90
A2-3018	24.10
A2-3020	1.20
A2-3021-1	5.60
A2-3021-2	16.85
A2-3022-1	1.20
A2-3022-2	5.85
A2-3023	1.20
A2-3025	57.20
A2-3026	45.90
A2-3027	45.90
A2-3028	45.90
A2-3029	5.90
A2-3379	5.45
A2-3691	12.10
A2-3898	32.90
A2-3905	73.90
C2-73 x 6-1/16	276.00
C2-73 x 6-9/16	276.00
C2-73 x 6-3/4	276.00
C2-73 x 7-5/16	276.00
C2-73 x 8-7/16	276.00
C2-73 x 9	276.00
C2-2335	218.00
C2-2336	172.00
C2-2337	183.00
C2-2339	310.00
C2-2340	264.00
[illegible]	[illegible]

PART NUMBER	LIST PRICE
C2-2344	$264.00
C2-2345	310.00
C2-2346	344.00
C2-2347	344.00
C2-2376	495.00
C2-2377	286.00
C2-2378	240.00
C2-2379	255.00
C2-2380	276.00
C2-2381	293.00
C2-2382	293.00
C2-2383	428.00
C2-2384	179.00
C2-2385	436.00
C2-2386	160.00
C2-2387	436.00
C2-2388	160.00
C2-2389	323.00
C2-2390	268.00
C2-2392	339.00
C2-2408	311.00
C2-2659	499.00
C2-2660	504.00
C2-2661	538.00
C2-2662	550.00
C2-2663	550.00
C2-2664	563.00
C2-2665	142.00
C2-2666	756.00
C2-2667	779.00
C-7763	1.50
C8709	1.20
C8854	2.55
C8930	9.20
C8938	7.35
C8958	12.90
C10025	12.20
C10035	3.00
C10037	15.15
C10038	15.15
C10060	15.15
C10061	15.15

PART NUMBER	LIST PRICE
C10062	$ 10.80
C10063	10.80
C10063SS	40.70
D2-74	765.00
D2-76	797.00
D2-77	550.00
D2-78	611.00
D2-79	918.00
D2-80	918.00
D2-1255	424.00
D2-1256	300.00
D2-1265	469.00
D2-1266	368.00
D2-1267	469.00
D2-1268	310.00
D2-1269	469.00
D2-1270	355.00
D2-1271	687.00
D2-1272	344.00
D2-1273	687.00
D2-1274	332.00
D2-1275	883.00
D2-1276	412.00
D221299	310.00
D2-1300	469.00
D2-1301	300.00
D2-1302	469.00
D2-1303	368.00
D2-1304	469.00
D2-1305	412.00
D2-1306	687.00
D2-1307	412.00
D2-1308	1,833.00
D2-1346	861.00
D2-1347	1,148.00
D2-1348	1,148.00
D2-1349	1,148.00
D2-1350	1,261.00
D2-1351	1,261.00
D2-1352	1,147.00
D2-1353	1,147.00

PART NUMBER	LIST PRICE
354	$1,147.00
D2-1355	1,147.00
D2-1356	1,147.00
D2-1357	1,147.00
D5193 x 4-5/16	91.65
D5193 x 4-9/16	91.65
D5193 x 5	91.65
D5195 x 4-1/2	91.65
D5197 x 3-5/16	91.65
D5197 x 4-5/16	91.65
D5199 x 4-1/8	91.65
D5199 x 4-1/4	91.65
D5202 x 4-1/8	91.65
D5203 x 3 1/8	91.65
D5203 x 3-1/2	91.65
D5203 x 3-7/8	91.65
D5203 x 4-3/16	91.65
D5352	2.85
D5450	6.60
D5478	15.15
E6041	79.35
E6042	61.10
E6046 x 1-1/2	79.35
E6047 x 2	79.35

PART NUMBER	LIST PRICE
E6048	$ 79.35
E6077	134.00
E6078	159.00
E6079	153.00
E6080	185.00
E6081	122.00
E6141 x 5-1/4	257.00
E6141 x 5-7/8	257.00
E6181 x 4-7/16	257.00
E6181 x 4-15/16	257.00
E6181 x 5-15/16	257.00
E6181 x 5-15/32	257.00
E6181 x 6-3/8	257.00
E6181 x 7-3/16	276.00
E6181 x 8-1/4	276.00
E6184 x 3-15/16	257.00
E6184 x 4-1/4	257.00
E6188 x 4-15/16	257.00
E6188 x 5-3/8	257.00
E6188 x 5-9/16	257.00
E6188 x 5-29/32	257.00
E6188 x 6-1/2	257.00
E6188 x 6-5/16	257.00
E6188 x 7-1/16	276.00

PART NUMBER	LIST PRICE
E6188 x 8-7/16	$ 276.00
E6204 x 4-3/4	257.00
E6204 x 5-5/16	257.00
E6204 x 5-21/32	257.00
E6204 x 6-1/8	257.00
E6204 x 6-3/4	257.00
E6204 x 7-15/16	276.00
E6204 x 9	276.00
F539	91.65
F540	137.00
F541	122.00
F544	146.00
F545	153.00
F546	107.00
P2	1.15
P6	1.15
P116	2.30
P142	4.10
P150	1.20
P189	4.10
P190	4.55
P192	1.20
P193	1.75
P194	.75
P195	1.25
P196	1.10
1/8" OD Copper Tube	.60

C2-3211 x 6 1/16"	$ 276.00
C2-3211 x 6 7/16"	276.00
C2-3211 x 6 3/4	276.00
C2-3211 x 7 15/16"	276.00
C2-3211 x 8 7/16"	276.00
C2-3211 x 9"	276.00
C2-3212 x 5 1/4"	257.00
C2-3212 x 5 7/8"	257.00
C2-3212 x 6 1/16"	257.00
C2-3213 x 4 7/16"	257.00
C2-3213 x 4 15/16"	257.00
C2-3213 x 5 15/32"	257.00
C2-3213 x 5 9/16"	257.00
C2-3213 x 5 15/16"	257.00
C2-3213 x 6 3/8"	257.00

C2-3213 x 7 3/16"	$276.00
C2-3213 x 8 1/4"	276.00
C2-3214 x 4 15/16"	257.00
C2-3214 x 5 3/8"	257.00
C2-3214 x 5 29/32"	257.00
C2-3214 x 6 5/16"	257.00
C2-3214 x 6 1/2"	257.00
C2-3214 x 7 1/16"	276.00
C2-3214 x 8 7/16"	276.00
C2-3215 x 4 3/4"	257.00

C2-3215 x 5 5/16"	$ 257.00
C2-3215 x 5 21/32"	257.00
C2-3215 x 6 1/8"	257.00
C2-3215 x 7 15/16"	276.00
C2-3215 x 9"	276.00
D2-1478	171.00
D2-1479	458.00
D2-1480	526.00
D2-1481	236.00
D2-1482	596.00
D2-1483	1,078.00

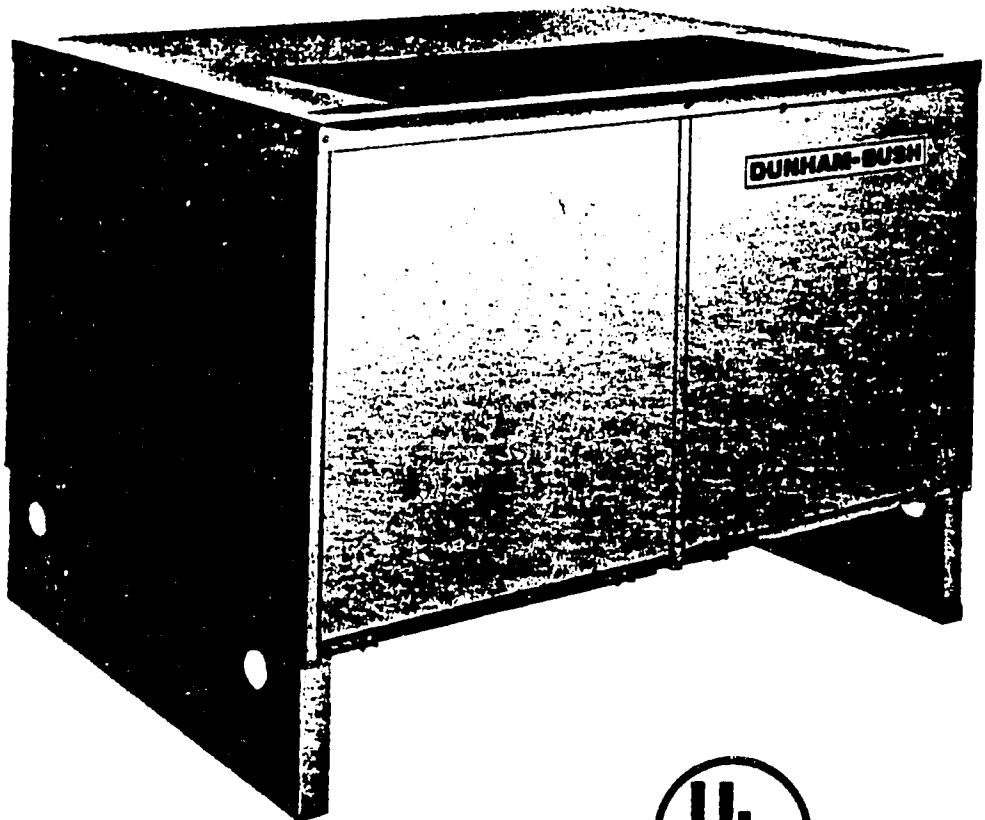

DUNHAM-BUSH

'ACE' ECON-O-TROL® 'CE' REFRIGERATION SYSTEMS

INSTALLATION, OPERATION AND MAINTENANCE INSTRUCTIONS

1½ HP THRU 10 HP

INDEX

DESCRIPTION	PAGE
GENERAL	2
A. Receiving Inspection	2
B. Rigging	2
Rigging/Fork Lift Illustration	2
INSTALLATION	3
A. Space and Location Requirements	3
Installation Drawings	3
B. Foundation	4
C. Refrigerant Piping Connections	4
D. Evacuation	5
E. Charging the System	5
F. Electrical Wiring	5
G. Pumpdown Cycle	5
H. Controls	6
Pressure Switch Chart	6
I. Four Conditions Necessary	6

DESCRIPTION	PAGE
OPERATION	6
A. Controls	6
B. Starting Unit	6-7
TYPICAL ECON-O-TROL SYSTEM	8
SYSTEM SEQUENCE OF OPERATION	8
DIMENSIONAL DATA	8
CONTROLS, FUNCTIONS AND DEVICES	9
ELECTRICAL SCHEMATICS	10-11
ELECTRICAL PANEL	12
MAINTENANCE	13
A. General	13
B. Annual Inspection	13
C. Cleaning Air Cooled Condensers	13
D. Burnouts and System Cleaning	13
SERVICE CHART	14
ELECTRICAL DATA	15-23

REFERENCES

A long, trouble-free life for 'ACE' Econ-O-Trol 'CE' air cooled condensing units can be insured if they are properly applied, installed and maintained. Please consult the latest revision of the following forms for further information.

'ACE' Econ-O-Trol Refrigeration Systems 5029-3
D/B Metic Compressor and Condensing Units 4030
D/B Metic Compressor and Condensing Unit Installation and Operating Instructions 4130
Compressor Installation and Cleaning Instructions 4232

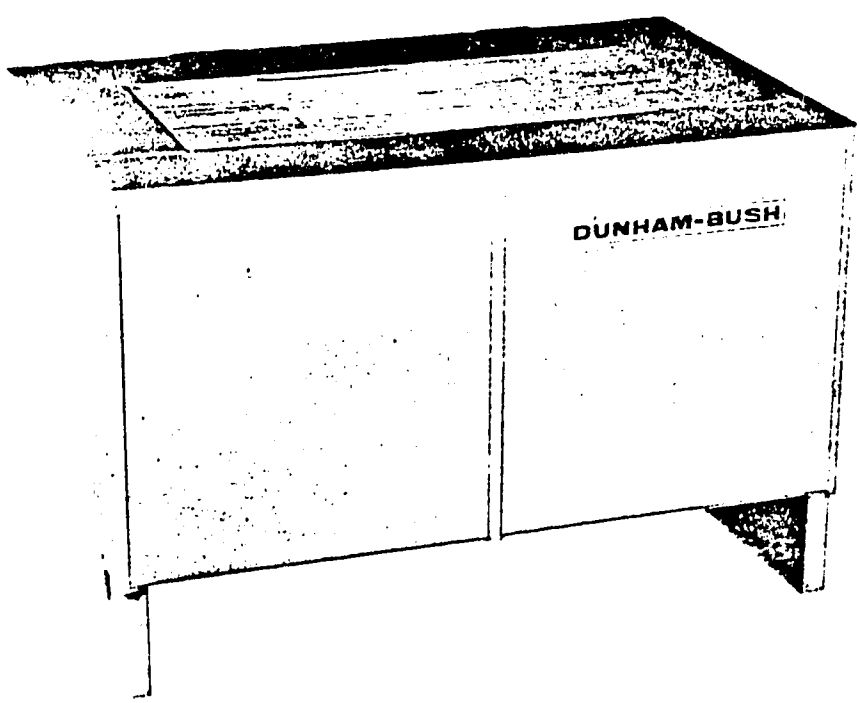

DUNHAM-BUSH RESERVES THE RIGHT TO MAKE CHANGES IN SPECIFICATIONS AND DESIGN WITHOUT NOTICE.

GENERAL

The 'ACE' Econ-O-Trol 'CE' condensing unit is an integral part of an energy saving system complete with a variety of Dunham-Bush unit coolers and special factory selected expansion valves that permit efficient system operation at virtually all temperature applications and outside ambients.

To assure satisfactory operation and to avoid costly damage to the unit, the installation should be made by a licensed refrigeration mechanic.

It is not the intent of these instructions to give complete design procedure, but only to guard against some common misapplications.

These instructions are general in nature and are for standard cataloged units. Non-standard units may vary in some respects from these instructions.

A. RECEIVING INSPECTION

When the unit is delivered, an immediate visual inspection of the unit and its accessories should be made in the presence of the carrier's representative. Be sure to open all cartons to expose any hidden damage. If there is any evidence of rough handling or damage, a notation should be made on the delivery receipt before signing. Shipping damages are the responsibility of the carrier and it is the obligation of the customer to file a claim. If requested, Dunham-Bush will assist in the filing of the claim.

B. RIGGING

Each unit has been carefully tested and inspected at the factory where every precaution was taken to assure that it reaches its destination in perfect condition. It is very important that the installers, movers, and riggers use the same care in handling of the unit. Chains, cables, or other moving equipment should be placed to avoid damage to any part of the unit. Refer to the diagram below for rigging illustration.

UNIT RIGGING AND FORK LIFT APPLICATIONS

NOTES:

1. **Rigging in drawing is representative only.**
2. **Skid must remain in position to prevent damage to unit when utilizing rigging cables or when moving unit with fork lift.**

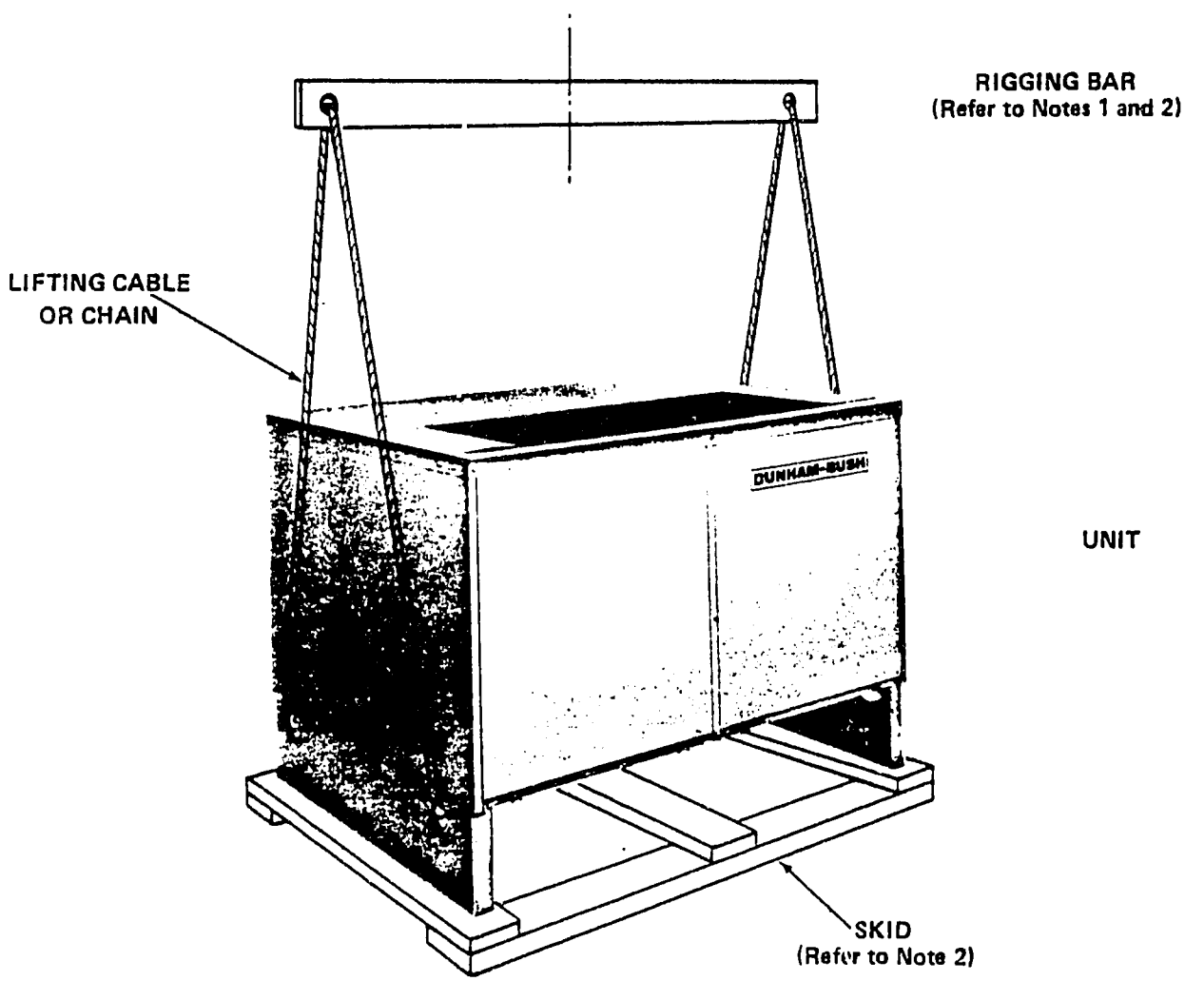

INSTALLATION

A. SPACE AND LOCATION REQUIREMENTS

The most important consideration which must be taken into account when deciding upon the location of air cooled equipment, is the provision for a supply of ambient air to the condenser, and removal of heated air from the condenser area. Where this essential requirement is not adhered to, it will result in higher condensing temperatures, which cause poor operation and possible eventual failure of equipment. Units must not be located in the vicinity of steam, hot air, or fume exhausts.

Another consideration which must be taken is that the unit shoud be mounted away from noise sensitive spaces and must have adequate support and isolation and insulation to avoid vibration and noise transmission into the building. Units should be mounted over corridors, utility areas, rest rooms and other auxiliary areas where sound levels are not an important factor. Sound and structural consultants should be retained for recommendations.

WALLS OR OBSTRUCTIONS *

The unit should be located so that air may circulate freely and not be recirculated. For proper air flow and access all sides of the unit must be a minimum of three feet away from any wall or obstruction. It is preferred that this distance be increased whenever possible. Care should be taken to see that ample room is left for maintenance work through access doors and panels. Overhead obstructions are not permitted. When the unit is in an area where it is enclosed by three walls the unit must be installed as indicated for units in a pit.

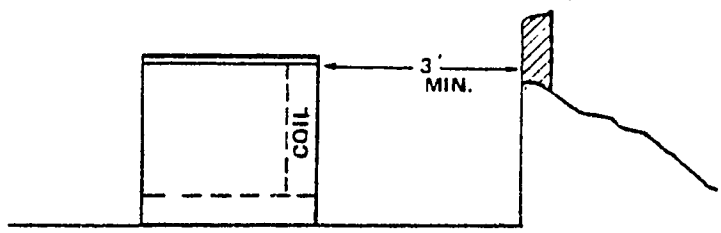

MULTIPLE UNITS *

For units placed side by side, the minimum distance between units is 6 feet. If units are placed end to end, the minimum distance between units is 1 foot.

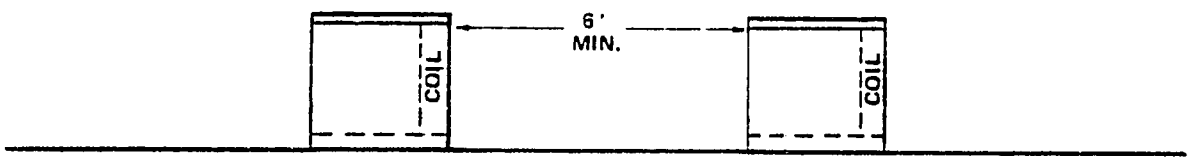

UNITS IN PITS *

The top of the unit must not be lower than the top of the pit. Side distances must be a minimum as shown.

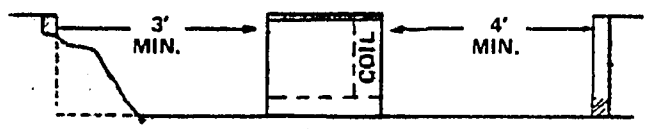

DECORATIVE FENCES *

Fences must have 50% free area, with a 1 foot undercut, a 3 foot minimum clearance, and it must not exceed the top of unit. If these requirements are not met, unit must be installed as indicated for "Units in a Pit".

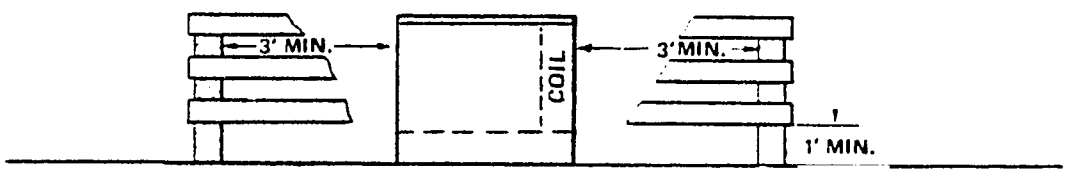

* Contact your local Dunham-Bush representative for approval of any variation from these requirements.

B. FOUNDATION

Foundations for 'CE' condensing units, must be level for proper operation and functioning of controls and provisions must be made to anchor the unit base to prevent movement. Insufficient lubrication of the compressor may result if the unit is not level.

Roof mounted units must be supported on adequate steel structures. If units are located on the ground level, a concrete base is recommended.

C. REFRIGERANT PIPING CONNECTIONS

All refrigeration piping practices when installing these condensing units are to be in accordance with local codes and the latest standards B9 safety code. To insure trouble-free operation the following conditions should be observed.

1. Do not connect this carefully dehydrated unit to tubing and unit coolers which have not been dehydrated. Tubing which may be dirty or moist must be thoroughly cleaned and dried out.

2. When soldering valves, they are to be disassembled or wrapped in wet clothes to prevent damage by heat. To prevent formation of copper oxide on the inside of the copper tubing, nitrogen or inert gas must be passed through the piping continuously while soldering joints.

3. Moisture in a refrigeration system is one of the main causes of trouble, particularly to the compressor, resulting in the formation of acids which attack the motor insulation, the valves and valve plates.

   Extreme precautionary measures are taken at the factory to insure that the condensing unit is clean and properly dehydrated. Equal care should be taken at the time of installation to be sure that the system is as clean and dry as possible. As an additional safeguard, a drier of the proper size is furnished on all units.

4. A moisture indicator is also furnished that allows for quick visible checking of the moisture content of the refrigerant. Indicators are provided with a sight glass that contains a porous filter paper impregnated with a chemical to change color according to the moisture content.

5. Suction lines have a great impact on the ability of a unit to run trouble-free. Improperly piped, they can cause slugging, oil dilution, and lubrication failure which results in the breakdown of the compressor.

   It is usually standard practice to size the suction line to have a pressure drop, due to friction, not any greater than the equivalent of a 2°F change in saturation temperature for halocarbon refrigerants (R-12, R-22, R-502). Where suction risers are necessary, because unit coolers are at a lower level than the condensing unit, a trap should be installed at the bottom of the riser and the lines sized for the minimum system capacity. All

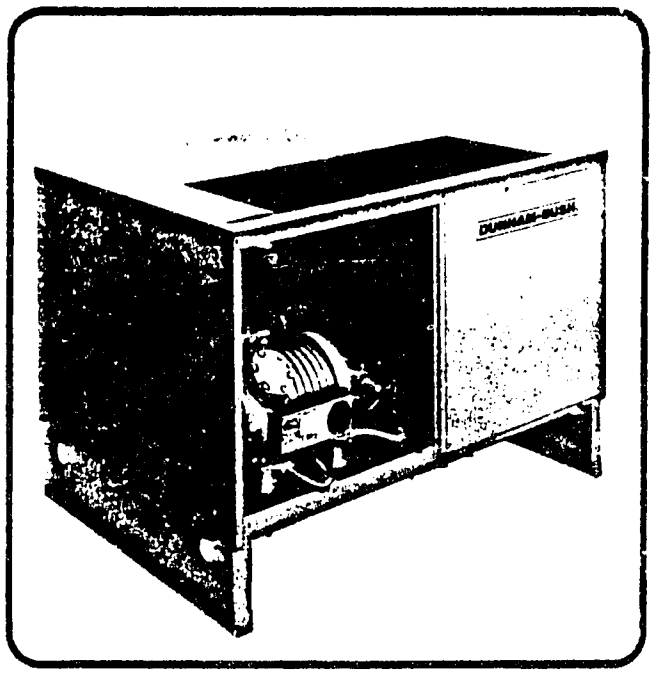

horizontal runs should be level or pitched toward the condensing unit to assure oil return. Suction lines should be insulated when run outside the refrigerated area.

6. Liquid lines should be sized to have a pressure drop, due to friction, not any greater than the equivalent of a 2°F change in saturation temperature for halocarbon refrigerants (R-12, R-22, R-502). Econ-O-Trol 'CE' condensing units are designed to provide subcooled liquid which will insure a solid column of liquid to the expansion valve when liquid lines are sized as noted above.

   During the winter months, the liquid line leaving the Econ-O-Trol 'CE' condensing unit will frost or sweat as it passes through heated areas. The line should be insulated to prevent damage to merchandise stored in these areas and to minimize sub-cooling losses.

7. For proper suction and liquid line sizing, reference should be made to the Dunham-Bush Refrigeration Manual, Form No. 5100A or to the latest edition of the ASHRAE Handbook of Fundamentals.

8. Expansion valves supplied with the Econ-O-Trol 'CE' condensing unit have been carefully selected to match system requirements. Substitutions are not to be made without consulting the Harrisonburg Application Engineering Department. The valves should be installed according to the instructions furnished with each valve.

9. All refrigerant connections should be leak tested before the system is charged with refrigerant. The complete system should be pressurized to 250 psig with a small charge of refrigerant backed up with dry nitrogen. The use of an electronic leak detector is recommended because of its greater sensitivity to small leaks. Leaks should be repaired as found and the test procedure repeated as necessary.

E. EVACUATION

When all refrigeration connections have been made a leak test and evacuation should be performed on the unit by a licensed refrigeration mechanic. A small, portable vacuum pump should be used to evacuate the system (evaporator coil, drier, lines, etc.) after the condensing unit has been installed in the system. Do not use the compressor as a vacuum pump.

Use a vacuum pump that is built for refrigeration evacuation. See your D/B-Metic wholesaler for this equipment. There are many excellent vacuum pumps on the market.

If the system is properly evacuated, using a good vacuum pump which can pull down into the 50 to 100 MICRON RANGE, the noncondensables are eliminated before the system is ever started.

A good vacuum pump with electronic gauge is desirable, and highly recommended for this procedure. Acually a 25" to 28" vacuum is similar to running on a tread mill as no great amount of dehydration or removal of noncondensables results. The gauge may be showing 50 microns at the pump, but if a large system is being evacuated, the vacuum level at the end of the system may be too high. The poorer the vacuum, the poorer the results.

This situation should not be further complicated by using too small a connecting line between the vacuum pump and the system as it will create a high pressure drop which will greatly reduce the efficiency of the vacuum pump. To use the vacuum pump most efficiently a triple evacuation method should be used. This involves pulling the system down to 100 microns and holding it for a period of three to four hours and then breaking the vacuum with dry refrigerant if it is a small system, or with nitrogen if it is a larger system. The vacuum is again pulled for a period of time, again broken with dry nitrogen and a third vacuum again pulled and broken with the type of refrigerant to be used in the system. At this point the system can be charged, and you can be assured that virtually all of the noncondensables have been removed.

Triple evacuation works on the principle of pulling out a high percentage of the noncondensables and/or water on each pull-down. As an example, suppose 90% of the noncondensables are removed on the first pull-down. This would leave 10%, of which 90% is removed on the second pull-down, leaving only 1%, and 90% of the remainder would be removed on the third pull-down leaving only 1/10 of 1% of the original noncondensables in the system. In addition, breaking the vacuum with dry nitrogen or dry refrigerant has a diluting effect on moisture and also prevents recondensation of the moisture which has been vaporized.

Besides being sure that the connecting line between the vacuum pump and the refrigeration system is sufficiently large enough to prevent pressure drop, there are three precautions to be kept in mind.

FIRST - An ordinary compound gauge is worthless on a good vacuum pump. The error in the gauge is greater than the amount of vacuum being measured. It is absolutely necessary to use a true micron gauge. There are several very good electronic gauges on the market which are rugged and have a dial on which microns can be read very similarly to the reading of an ammeter.

SECOND - Be sure the system, including the factory piping of the unit, is good and tight and has been checked for the slightest leak.

A good vacuum pump will stay ahead of a small leak and it simply means pulling air and moisture in one end and pushing it out the other.

THIRD - It also should be remembered that water trapped under layers of oil will stay there regardless of the vacuum pulled and will not be dislodged until the circulating refrigerant takes the oil up and releases the water. If any leaks are found, make repairs. A Halide torch, soap bubble, or electronic detector may be used for leak detection.

E. CHARGING THE SYSTEM

1. As all units are shipped with only a holding charge they must be fully charged with the refrigerant for which they were designed. The type of refrigerant to be used is specified on the nameplate of the unit. When charging a unit you must use a clean and dry refrigerant. This is especially important when charging a low temperature system.
2. Open all discharge, suction, and liquid line valves. Connect the charging hose to the charge port of the liquid line valve. Be sure to purge the hose of all air. Move the valve off its back seat and add liquid refrigerant until the unit pressure equalizes the refrigerant cylinder pressure. Close the charge port of the liquid line valve. Move charging hose to the back seating port of the suction valve and purge hose of all air. Start compressor and continue to add refrigerant gas until the liquid line sight glass is clear and a minimum of 8°F sub-cooling is obtained leaving the condenser sub-cooling section.
3. After the system has been completely charged and the compressor is operating, the system should once again be checked for leaks to make sure that none have occurred during the handling of the equipment.
4. The moisture indicator should be checked and the filter drier changed if necessary.

F. ELECTRICAL WIRING

When installing the unit the following checks and observations should be made:

1. All wiring checked for damage and all terminal connections tested for tightness.
2. Connections to unit should match the unit nameplate in volts, phase and hertz with a maximum voltage variation of 10% of nameplate.
3. A fused disconnect switch must be installed by the customer to protect the system against short circuiting and overload.
4. All field wiring is to be in accordance with the National Electrical Code and must comply with state and local codes.
5. Econ-O-Trol 'CE' Systems with electric defrost unit coolers are supplied with defrost timer and contactor(s), as required, mounted and wired in the electrical control panel. Refer to the system wiring diagram enclosed in the condensing unit for wiring details.

G. PUMPDOWN CYCLE

A pumpdown cycle is required on all Econ-O-Trol 'CE' Systems to prevent migration of refrigerant from the unit cooler to the compressor during long off cycles with low ambients at the compressor. The unit wiring diagram enclosed in the condensing unit shows how the liquid line solenoid valve and room thermostat are to be field wired to initiate the pumpdown cycle.

H. CONTROLS

All controls are factory set, however, operating control settings are not always applicable under all operating conditions. Safety controls must be set to factory recommendations as follows:

PRESSURE SWITCH SETTINGS

Switch	Cut In	Cut Out
R-12 HP Switch R-22 HP Switch R-502 HP Switch	120 psig 300 psig 275 psig	200 psig 375 psig 350 psig
R-12 Fan Cycle Switch R-22 Fan Cycle Switch R-502 Fan Cycle Switch	135 psig 225 psig 245 psig	58 psig 100 psig 115 psig
R-12 LP Switch R-22 LP Switch R-502 LP Switch	4 psig 55 psig 4 psig	5.0 in. hg. 30 psig 0.0 psig

The oil pressure safety control is set to cut in at 12 psi and cut out at 7 psi of oil pressure.

On compressors supplied with oil pumps the oil pressure should be 20 pounds above suction pressure.

I. FOUR CONDITIONS NECESSARY

No matter how detailed one gets in outlining installation procedures, everything that is done to prepare a system before making it operational is really aimed at arriving at four (4) conditions. These four conditions are vitally necessary to start the system out in good shape - free of contaminates, free of noncondensables, dry and in a condition which will assure trouble-free operation:

(1) Clean System
(2) Dry System
(3) Acid Free System
(4) Free of Noncondensables

OPERATION

A. CONTROLS

Switches, thermostats, and liquid solenoid valves to control the operation of these units will be supplied by the contractor. The wiring diagrams supplied with the unit will show a tie-in for these controls. Liquid line solenoid valves must be interlocked with the Dunham-Bush control panel on all applications.

B. STARTING UNIT

1. Caution

   Prior to applying power to the unit, the following items must be checked by a licensed refrigeration mechanic.

   a. Make sure all system valves are in the full open position and the system contains an operating charge of refrigerant.

   b. With the main disconnect in the "off" position, check to see that it is properly sized and contains the proper size fuses.

   c. Make sure the proper voltage, phase, and hertz are present at the main disconnects.

   d. The voltage must not vary more than ± 10% of the rated nameplate voltage.

   e. To aquaint yourself with the nomenclature and function of controls, an explanation can be found on page number 9.

2. Initial Start Up and Operation

   a. Check for proper setting of all operating and safety controls.

   b. With the unit toggle switch in the "off" position, throw the main disconnect switch to the "on" position and check to make sure the proper voltage is applied to all terminals of the unit's main terminal block. Check fan rotation. Rotation can be changed on the main terminal block by interchanging any two of the main line wires at the main disconnect.

   c. Physically inspect compressor crankcase heater to make sure it is operating. In the event the crankcase does not warm up, use the wiring diagram to locate the fuses and check to see that they are not burned out. Allow the crankcase heater to warm up long enough to boil off all liquid refrigerant in the crankcase (a minimum of twenty-four hours is required).

   d. Rotate the timer to the normal refrigeration mode. Turn the unit toggle switch to the "on" position. The unit cooler fan motors should come on and the liquid line solenoid valve should open permitting refrigerant flow to the unit coolers. As soon as the suction pressure increases to the "cut-in" point, the compressor should start.

   e. In the event no action takes place, go through the following steps using the wiring diagram accompanying the unit:

      1. Check starter overload relays and depress push button lock-out on side of control panel. This should start unit if starter overload relays, high pressure switch, low pressure switch, and oil failure switch have reset automatically.

      2. If nothing happens in step 1 above, check control fuses, main disconnect fuses, and compressor motor protection fuses.

      3. Bypass low pressure, high pressure, and oil failure switches with jumper wires (one switch at a time) to see if compressor will start. If compressor starts, condition will have to be corrected that caused safety switch(es) to open.

      4. If no sympton is apparent, a continuity check should be made by tying one lead of the test apparatus to one side of the control circuit, where it connects to the main terminal block, and tracing through the other side of the control circuit until the malfunction is detected.

      5. With compressor operating, the fan cycle switch will turn on condenser fan number 1 as the discharge pressure increases.

      6. After the system has balanced out, and the unit coolers are operating at the approximate design temperature, the superheat setting of the expansion valve should be checked. (A maximum of 6°F is recommended)

         To correct the superheat, remove the adjustment stem cap from the bottom of the valve. Turning the stem clockwise increases the superheat setting and counterclockwise decreases the setting.

OPERATION - CONTINUED
B. STARTING UNIT

2. Initial Operation and Start-Up - Continued

f. On low temperature units it may be necessary to throttle the suction valve during the initial "Pull-down" of the evaporator in order to prevent overloading the motor, particularly under low-voltage or high ambient conditions. This may be accomplished by partially closing the suction service valves until the suction pressure is 15 pounds per square inch.

g. Remove all gauges and retest for leaks with leak detector.

h. Check oil level. Compressors are equipped with a sight glass for checking the oil. Oil level should be near center of sight glass.

j. Replace all seal caps on valves.

k. Check tags attached to mounting bolts for instructions.

FOR COMPRESSORS WITH OIL PUMPS

m. Observe oil during operation to see that oil is being agitated indicating oil pump is functioning properly. If there is any doubt about proper functioning, check oil pressure by installing gauge in the 1/4" pipe tapped opening in the pump cover. Oil pressure differential should be 20 pounds.

n. If there is insufficient oil pressure:

1. Reverse direction of compressor. The pump is a reversing type.

2. If reversing does not produce oil pressure, check the oil strainer to see if it is plugged. If strainer is clean, replace the complete pump end plate assembly, not just the pump.

p. If the oil becomes discolored indicating contamination, the contamination can be eliminated by installing a new drier in the liquid line and changing the oil. The oil can be drained by removing the bottom bolt on the compressor on certain models. This bolt will have a copper washer under its head.

LUBRICATION OILS

WARNING: USE ONLY DUNHAM-BUSH APPROVED REFRIGERATION OIL. WARRANTY WILL BE VOID IF OTHER THAN APPROVED OIL IS USED.

Current production compressors are supplied with either 150 SUS or 300 SUS oil, as follows:

100 PHF, 150 PHF, 200 PHF 204 PHF, 100 PHF5 150 PHF5, 200 PHF5	300 SUS
All other Models	150 SUS

Approved Oils:

150 SUS	SUNISO 3GS CAPELLA "B"
300 SUS	SUNISO 4GS CAPELLA "D"

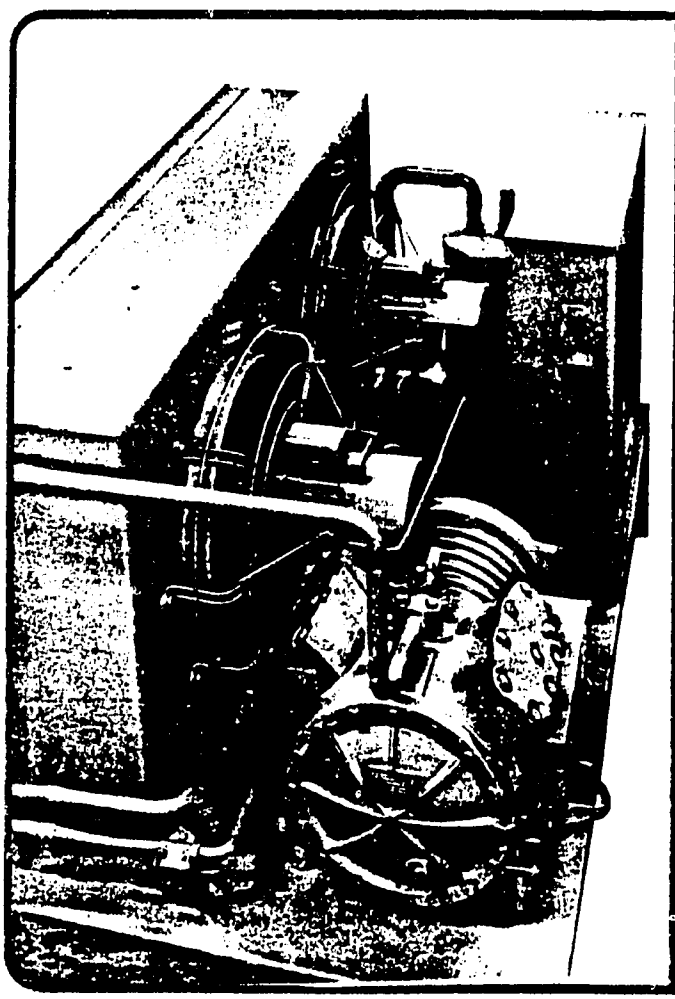

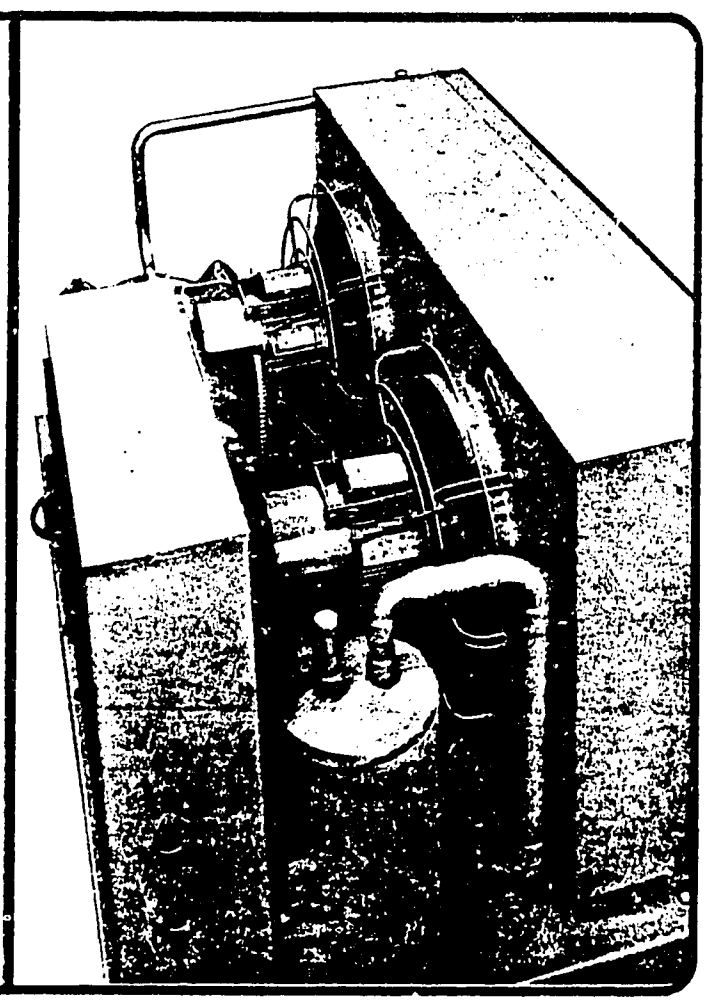

TYPICAL ECON-O-TROL SYSTEM

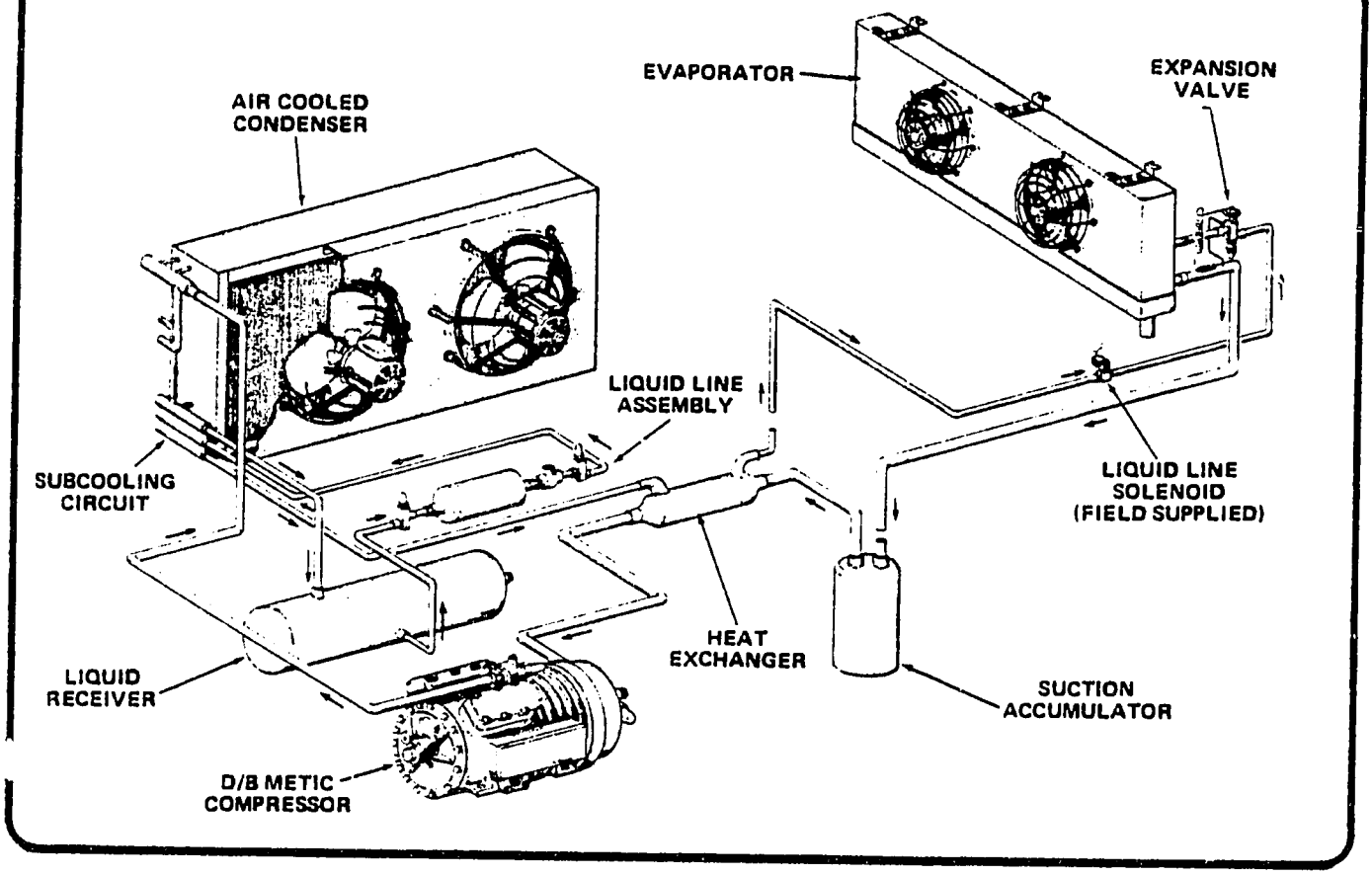

SYSTEM SEQUENCE OF OPERATION

Reviewing the component and system schematic above, the following sequence of operation occurs:

- Hot gas from the discharge side of the compressor enters the condenser and is discharged as a liquid to the receiver for storage and is available as required.
- Upon evaporator demand, the liquid leaves the receiver, passes through the filter drier, sight glass, subcooling coil, heat exchanger and finally to the Econ-O-Trol system's expansion valve for proper metering. The valve's unique design permits control over a wide range of pressures and greatly reduced loads.

The expansion valve is quite versatile, with respect to head pressure variances, and maintains the desired qualities of instant and exact control of suction superheat.

- The metered liquid boiled in the evaporator, leaves as a gas in the suction line and enters the acumulator.
- The suction accumulator will separate any possible liquid or oil carryover and meter it, at a controlled rate, to the suction line.
- Finally, after utilizing the superheating capabilities of the heat exchanger, the suction gas now returns to the suction inlet of the compressor.
- Two valves are located in the liquid line, on either side of the filter drier, to permit its replacement with minimum refrigerant loss.

DIMENSIONAL DATA

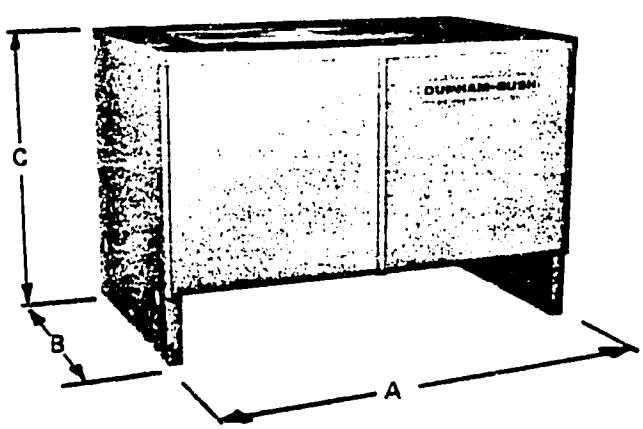

H.P.	A	B	C	APPROX. LBS.
1½, 2, 3, 5	52¼	33½	34¾	750
7½, 10	75¼	39¼	40¾	1125

NOTE: DIMENSIONS ARE FOR ROUGHING IN PURPOSES ONLY. CONSULT FACTORY FOR CERTIFIED DRAWINGS.

CONTROLS , FUNCTIONS AND DEVICES

CONTROLS AND FUNCTIONS

Typical wiring diagrams for ambient and electric defrost systems are shown on pages number 10 and 11. Control circuit operates on 208/230 volts. Transformer supplied on 460 volt systems.

ELECTRIC DEFROST
TYPICAL OPERATING SEQUENCE

REFRIGERATION - Control Switch "1S" is closed after Condensing Unit is energized for 24 hours. With Timer "TMR" preset, Contact "2 - 4" of Timer will be closed. Thermostat "1TAS" closes on a rise in room temperature energizing Liquid Line Solenoid "1SOL" and Time Delay Relay Heater "TD". With "TD" Contacts normally closed Relay "R" is energized and "R" Contacts close. Evaporator Fan Motor(s) are energized direct from Timer Terminal No. 1 through normally closed Fan Relay "2R". With Contacts "R" closed, Compressor Contactor "1C" is energized, Contacts "1C" close, supplying power to both the Compressor and Condenser Fan Motors. At the same time, Compressor Auxiliary Contacts "1CA-1" and "1CA-2" open. Auxiliary Contact "1CA-1" de-energizes the Compressor Crankcase Heater "CCH". Auxiliary Contact "1CA-12" acts as an interlock and prevents the Defrost Heaters from being energized while the Compressor is running. Approximately 90 seconds after the Compressor starts, "TR" Contacts open, de-energizing Relay "R", opening Contacts "R". This Time Delay allows the Compressor sufficient time to start and develop an adequate suction pressure for continuous operation in cold ambients.

DEFROST - When a defrost cycle is initiated by Timer "TMR" Contact "2 - 4" opens and Contact "1 - 3" closes. The opening of Contact "2 - 4" de-energizes the Liquid Line Solenoid "1SOL" and initiates a "pumpdown". The "pumpdown" is terminated when the "LP" Switch opens. Compressor Contactor "1C" is de-energized, Contacts "1C" open, and Compressor is shut down. With "1C" de-energized, both Auxiliary Contacts close, energizing Crankcase Heater "CCH" through "1CA-1" and Defrost Contactor "2C" through "1CA-2". The closing of Timer Contact "1 - 3" energizes Evaporator Fan Relay "2R". Contact "2R" opens and shuts down the Evaporator Fans. Termination of the defrost cycle initiates a repeat of the control sequence.

The control safety circuit incorporates a "lockout" which does not permit the Compressor to run until the "lockout" is terminated by pushing the Reset Button "PB". The "Lockout" is initiated by the opening of any one of the following safeties; "HP" Switch, Compressor Oil Failure Switch "CDF", Compressor Overloads "OL", and Motor Winding Thermostats "MWT" when used.

When any of the above safeties open, the control circuit passes through the Impedance Relay "IR". Its normally open Contact closes, energizing the "IR" Relay Coil. Normally closed "IR" Contact opens and "locks out" the Compressor Contactor "1C". To reset the circuit, Reset Button "PB" is pushed, which will de-energize Relay "IR" and return "IR" Contacts to their de-energized condition.

OPERATING DEVICES

PB - Push button-reset switch that re-energizes the control circuit once it has been interrupted by any of the following safety devices, HP and COP switches and OL compressor overloads.

TMR - Controls system operation and defrost. Initiates pumpdown cycle during defrost by de-energizing the liquid line solenoid valve.

1R - Impedance Relay-locks out the control circuit and prevents short cycling of compressor on safety switches.

TD - Time delay-relay permits by-pass of LP switch on start-up for approximately 90 seconds.

CCH - Crankcase Heaters are energized whenever the compressor is not operating. They must operate for a period of 24 hours prior to initial start-up or if the unit is "down" for any substantial period of time.

1S - Control Switch-manually energizes compressor circuit.

PFS - Pressure Switch-senses discharge pressure and cycles condenser fan No. 1.

TFS - Temperature Switch-senses condenser ambient and cycles condenser fan No. 2.

1C - Motor Contactors-when activated provide power to the compressor and fan motors.

2C - Defrost Contactors-when activated provide power to unit cooler defrost heaters.

2R - Fan Relay-when activated provide power to unit cooler fan motors. Furnished on electric defrost units.

SAFETY DEVICES

OL - Overload-designed to open the control circuit if there is an overload in the power circuit to the motors.

HP - High Pressure Switch-will open the control circuit to the compressor if the discharge pressure rises above its preset limits.

FU - Fuse-to open the circuit if there is a prolonged overload or short circuit.

LP - Low Pressure Switch-will open the control circuit to the compressor if the suction pressure falls below its preset limit.

COF - Compressor Oil Failure Switch-has a "built-in" time delay and if the pressure differential between the low side and high side of the oil pump fails to attain or sustain a predetermined pressure for a period of 90 seconds the compressor will shut down.

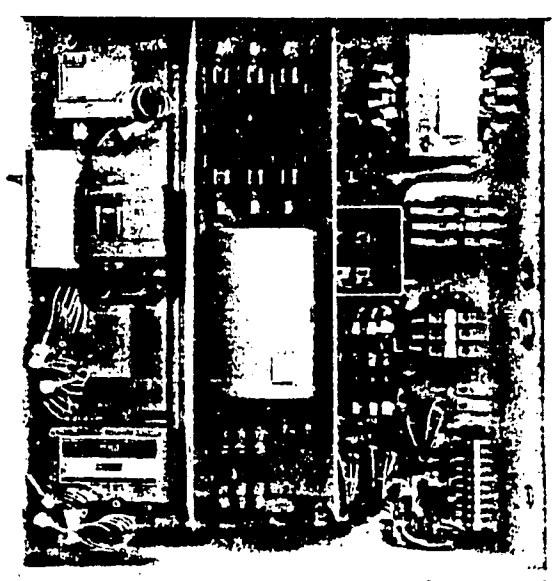

TYPICAL ECON-O-TROL ELECTRICAL SCHEMATIC
AMBIENT DEFROST

LEGEND

OL'S	OVERLOAD RELAYS ON "M"
COF	COMP OIL FAILURE SWITCH
1C	CONTACTOR COMPRESSOR
PR	POTENTIAL RELAY
SC	START CAPACITOR
——	FACTORY WIRING
- - -	FIELD WIRING
○	FACTORY TERMINAL] 2TB
□	FIELD TERMINAL] 2TB
△	OPTION
1 SOL	LIQUID LINE SOLENOID
CCH	CRANKCASE HEATER
RC	RUN CAPACITOR.
1CA	AUX RELAY CONTACT ON "IC"
HP	HIGH PRESSURE SWITCH
LP	LOW PRESSURE SWITCH
PB	PUSH BUTTON SWITCH
1S	TOGGLE SWITCH
FU	FUSE
1 TAS	OPERATING THERMOSTAT
TMR	DEFROST TIMER
1TB	TERMINAL BLOCK, MAIN
IR	RELAY, IMPEDANCE
IP	INHERENT PROTECTION
TD	TIME DELAY RELAY
•	FIELD SUPPLIED
PFS	PRESSURE SWITCH
TFS	TEMPERATURE SWITCH

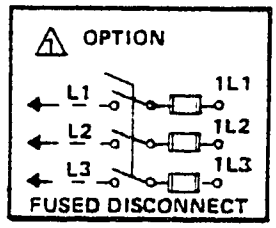

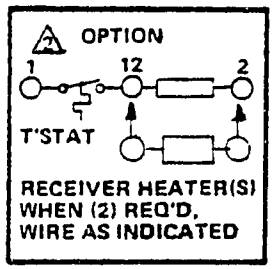

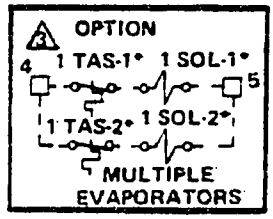

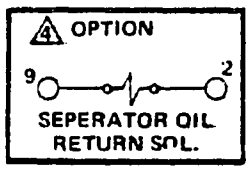

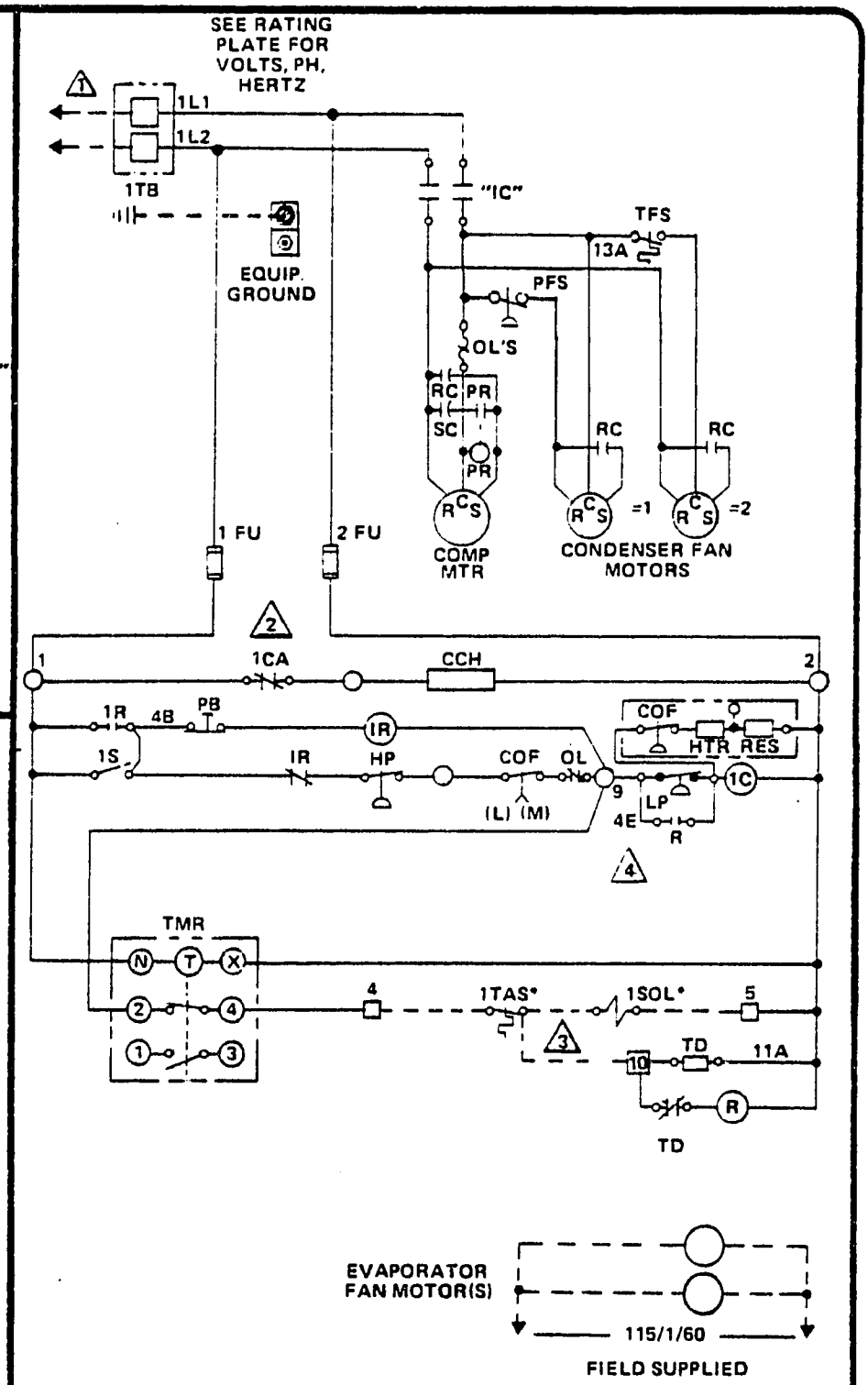

NOTES:

1.) FUSES TO BE DUAL ELEMENT TYPE

2.) ALL FIELD WIRING MUST COMPLY WITH NATIONAL, STATE & LOCAL CODES

3.) CONDENSER FAN MOTORS HAVE INHERENT OVERLOAD PROTECTION

TYPICAL ECON-O-TROL ELECTRICAL SCHEMATIC
ELECTRIC DEFROST

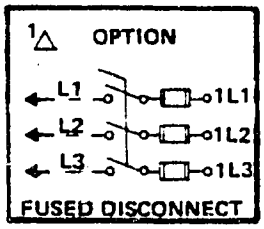

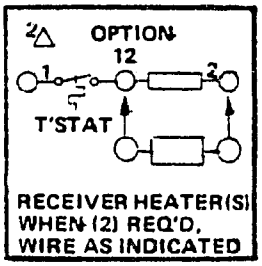

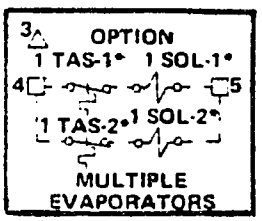

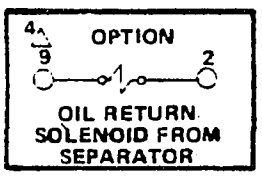

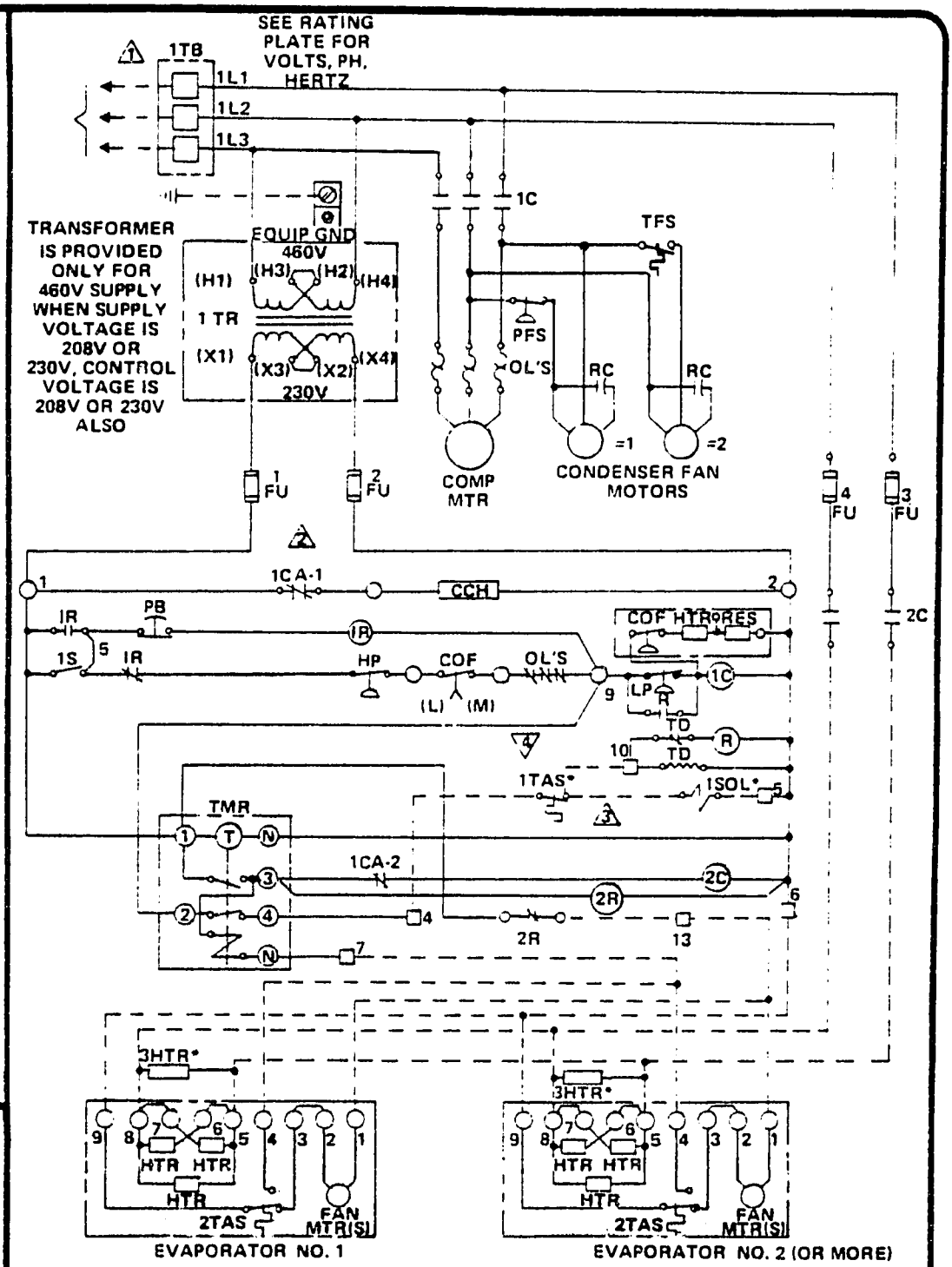

NOTES:

1. FUSES TO BE DUAL ELEMENT TYPE.
2. ALL FIELD WIRING MUST COMPLY WITH NATIONAL, STATE & LOCAL CODES.
3. CONDENSER FAN MOTORS HAVE INHERENT OVERLOAD PROTECTION.

LEGEND

TD	TIME DELAY RELAY	ITR	TRANSFORMER
TFS	TEMPERATURE SWITCH	○	FACTORY TERMINAL
PFS	PRESSURE SWITCH	□	FIELD TERMINAL
CCH	CRANKCASE HEATER	△	OPTION
OLS	OVERLOAD RELAYS	1R	RELAY, IMPEDANCE
FU	FUSE	2R	RELAY, LOWSIDE FAN
RC	RUN CAPACITOR	1C	CONTACTOR, COMPRESSOR
HP	HIGH PRESSURE SWITCH	1CA	AUX. SWITCHES ON "1C" CONT.
LP	LOW PRESSURE SWITCH	2C	DEFROST CONTACTOR
PB	PUSH BUTTON SWITCH	1TAS	OPERATING THERMOSTAT
TMR	DEFROST TIMER	2TAS	DEFROST TERMINAL T'STAT
COF	COMP. OIL FAILURE SWITCH	1SOL	LIQUID LINE SOLENOID
——	FACTORY WIRING	3HTR	DRAIN HEATER(2 AMP MAX.)
- - -	FIELD WIRING	1S	TOGGLE SWITCH
•	FIELD SUPPLIED	1TB	TERMINAL BLOCK, MAIN

'ACE' ECON-O-TROL SYSTEM FEATURES

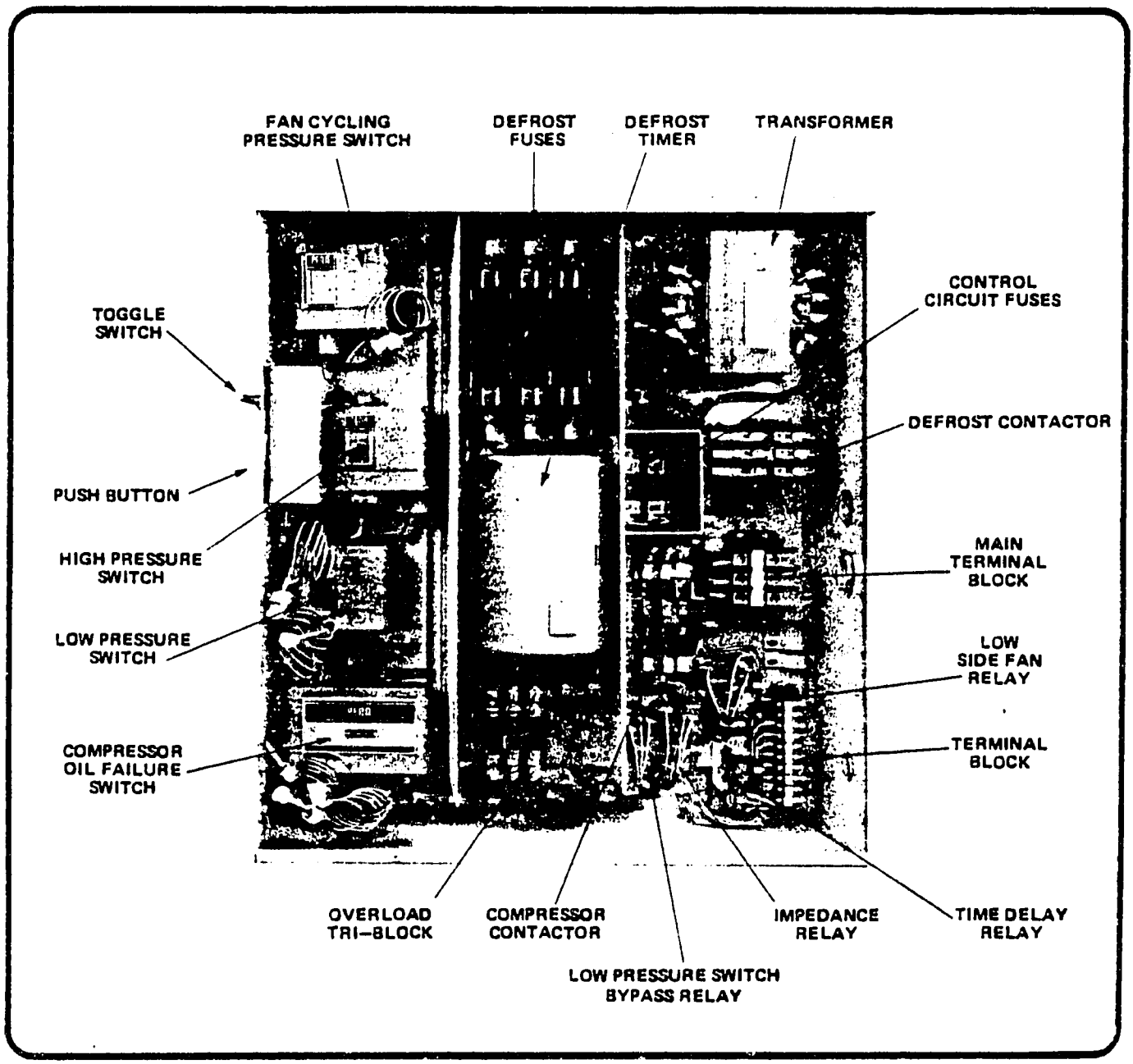

ELECTRICAL CONTROL PANEL - The basic condensing unit control panel includes fused circuit protection, compressor motor starter, high/low pressure switch, oil failure switch on compressors with oil pumps, fan cycling switches, crankcase heater, on/off switch, compressor protection circuit reset button, defrost time clock (8045 for ambient defrost and 8145 for electric defrost) with appropriate defrost contactors where applicable. All models are available for 208-230/3/60 or 460/3/60 as standard. In addition, 1½, 2, 3 and 5 HP models are available in standard 208/1/60 and 230/1/60. Available 460 volt models including a properly sized 460/230 volt transformer. A wide variety of optional controls are available for specific applications.

All units are completely pre-wired at the factory in accordance with NEC.

Data in this catalog is for 60 Hertz operation. For 50 Hertz operation, contact Dunham-Bush International in West Hartford.

MAINTENANCE

A. GENERAL INFORMATION

Like all mechanical equipment, this condensing unit should be checked periodically. Use only the services of a qualified refrigeration service mechanic for inspection and maintenance checks or service operation. If a breakdown should occur check the service chart on the succeeding pages for possible causes and remedies.

Make certain that all controls are set correctly to protect the equipment against improper operation.

B. ANNUAL INSPECTION

1. Unit casing should be checked for evidence of corrosion. These areas should be properly cleaned and retouched.

2. Propeller fan set screws should be tightened. Blades should be inspected for evidence of corrosion and cracks.

3. Condenser coil fin surfaces should be checked to see that they are free of the accumulation of dirt, lint or other foreign matter. If condenser is allowed to get too dirty, the compressor may run inefficiently at high head pressures or stop entirely. Foreign matter should be removed as noted in Paragraph C.

4. Motor and bearings should be checked for evidence of wear. Bearings should be lubricated in accordance with the manufacturer's recommendation or every six months to one year. More frequent lubrication may be necessary depending on local conditions.

C. CLEANING AIR COOLED CONDENSERS

Coil fin surfaces should be washed down with cool water or commercially available coil cleaners at least once a month during operation.

If conditions are bad and condensers pick up dirt more rapidly, it may be necessary to clean them more frequently.

DO NOT USE hot water or steam, as to do so will cause excessive pressure in the system.

D. BURNOUTS AND SYSTEM CLEANING

The burnout of a hermetic compressor motor in the majority of cases is a direct result of impurities in the refrigerant system. These impurities may be in the form of dirt, scale or moisture left in the system at the time of installation. In addition there could be fluorine and chlorine gases, oxygen and acids due to the breakdown of the refrigerant, oil or insulating materials, or any combination of these. The presence of any contaminating substance can start a reaction resulting in the formation of the others. The ultimate result is premature failure of the compressor motor. For specific instructions consult the latest revision of Form 4232.

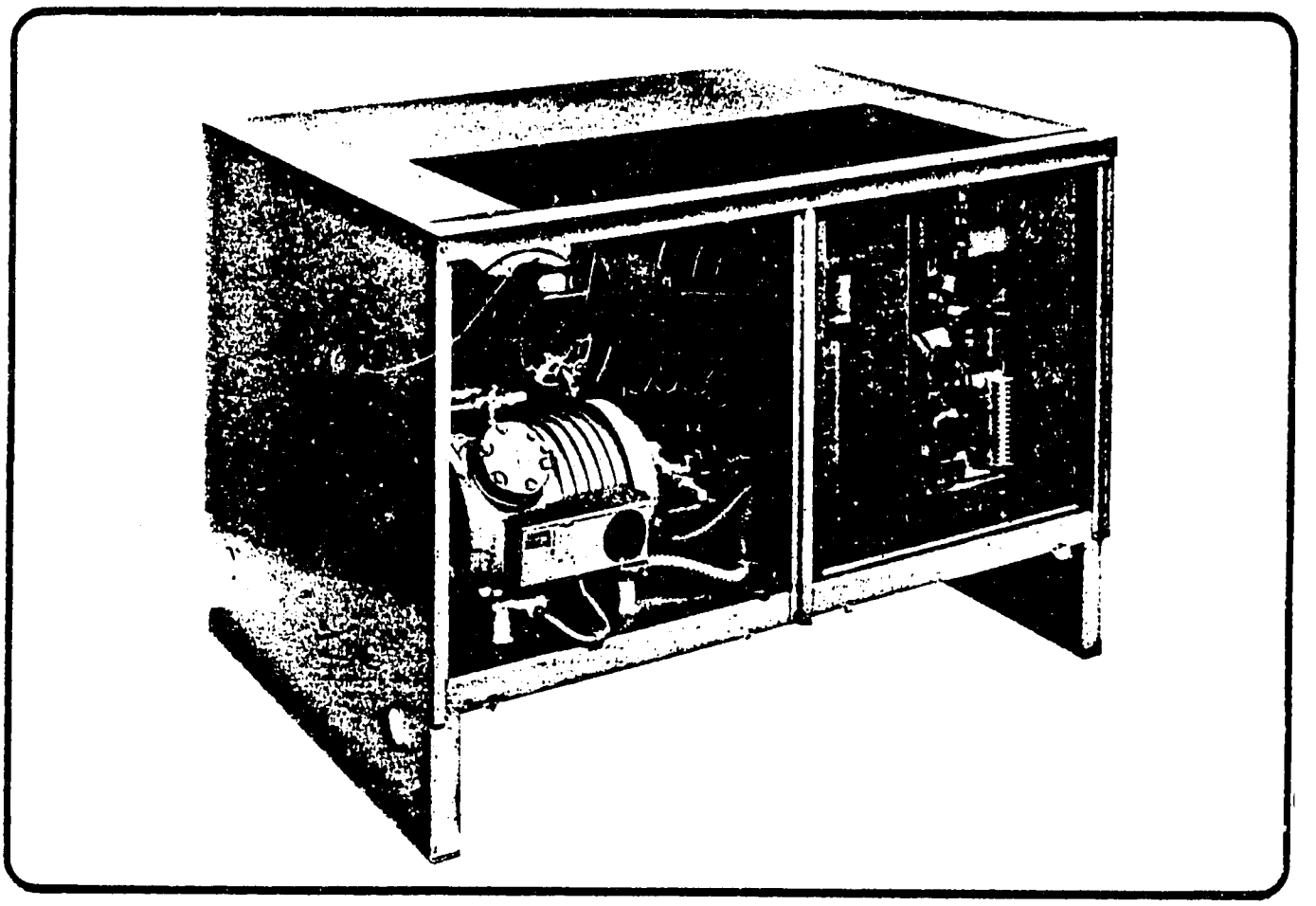

SERVICE CHART

SYMPTOM	POSSIBLE CAUSE	REMEDY
A. Unit will not start.	1. Power off.	Check main disconnect switch.
	2. Main line open.	Check main fuses.
	3. Control Circuit open.	Tighten loose terminals; then, check fuses; starter heater elements, pressure and temperature controls.
	4. Incorrect wiring.	Check wiring diagrams.
B. Compressor hums but does not start.	1. Low voltage.	Check at main entrance and at unit, Consult power company if voltage is low and increase wire size to the unit if voltage is normal at main and low at unit. Voltage at unit starters must be within 10% of motor name plate rating.
	2. No power on one phase of 3 Phase unit.	Check fuses and wiring.
C. Compressor cycles on low pressure control.	1. Refrigerant shortage.	Check for leaks and add refrigerant.
	2. No load.	Check water flow through the chiller.
	3. Restriction in liquid line.	a) Restricted drier. If temperature drop exists across the drier, remove and replace cores. b) Liquid line or suction valve partially closed. Open valves fully and close in one full turn. c) Expansion valve clogged or inoperative. Check superheat setting. Check charge and thermo bulb. d) Liquid line solenoid not opening fully, or leaking during the off cycle.
	4. Head pressure too low.	Reset head pressure control adjustments.
	5. Low pressure differential too close.	Increase to a minimum of 25 pounds.
D. Compressor cycles on high pressure control.	1. Compressor discharge service valve partly closed.	Open valve fully.
	2. Air in system.	If pressure in system exceeds pressure corresponding to ambient air temp., with unit off purge from compressor gauge connection.
	3. Refrigerant overcharge.	Purge system while running, until bubbles show in sight glass. Recharge until glass just clears.
	4. Belts off condenser fan.	Replace belts.
	5. Dirty condenser.	Clean condenser surface with brush and/or vacuum. (Per attached instructions (Page 10).
	6. High pressure control.	Set control per manual. (Page 6).
	7. Fan cycle switches inoperative, or set too high.	Check and readjust.

ACE ECON-O-TROL® ELECTRICAL DATA

UNIT	VOLTS/PHASE	CONDENSING UNIT MIN. CIRCUIT AMPACITY	TOTAL EVAPORATOR MOTOR AMPS	DEFROST AMPS	ECONOTROL SYSTEM MIN. CIRCUIT AMPACITY	ECONOTROL SYSTEM MAX. FUSE SIZE AMPS
R12		2 HORSEPOWER				R12
CE20C (All off-cycle defrost models)	208/1	19.7	*		19.7	30
	230/1	18.4	*		18.4	30
	208-230/3	14.2	*		14.2	20
	460/3	6.8	*		6.8	10
CE20C-NDE120	208/1	19.7	1.5	14.4	21.2	30
	230/1	18.4	1.6	16.6	20.0	30
	208-230/3	14.2	1.6	13.2	15.8	20
	460/3	6.8	1.6	6.2	7.6	10
CE20C-NDE150	208/1	19.7	2.3	17.3	22.0	30
	230/1	18.4	2.5	20.0	20.9	30
	208-230/3	14.2	2.5	15.9	16.7	25
	460/3	6.8	2.5	7.5	8.1	12
CE20C-NDE-180	208/1	19.7	2.3	18.6	22.0	30
	230/1	18.4	2.5	21.5	21.5	30
	208-230/3	14.2	2.5	17.2	17.2	25
	460/3	6.8	2.5	8.6	8.6	12
CE20C-ECLS85	208/1	19.7	1.5	7.0	21.2	30
	230/1	18.4	1.6	8.1	20.0	30
	208-230/3	14.2	1.6	4.5	15.8	20
	460/3	6.8	1.6	2.3	7.6	10
CE20C-ECLS130	208/1	19.7	2.3	10.3	22.0	30
	230/1	18.4	2.5	11.9	20.9	30
	208-230/3	14.2	2.5	6.6	16.7	25
	460/3	6.8	2.5	3.3	8.1	12
CE20C-ECLS170	208/1	19.7	3.0	13.5	22.7	30
	230/1	18.4	3.2	15.6	21.6	30
	208-230/3	14.2	3.2	8.7	17.4	25
	460/3	6.8	3.2	4.4	8.4	12
CE20C-EC120	208/1	19.7	3.6	12.9	23.3	30
	230/1	18.4	4.0	14.3	22.4	30
	208-230/3	14.2	4.0	10.2	18.2	25
	460/3	6.8	4.0	4.7	8.8	12
CE20L-ECLS85	208/1	17.3	1.5	7.0	18.8	30
	230/1	15.9	1.6	8.1	17.5	25
	208-230/3	13.4	1.6	4.5	15.0	20
	460/3	6.4	1.6	2.3	7.2	10
CE20L-ECLS130	208/1	17.3	2.3	10.3	19.6	30
	230/1	15.9	2.5	11.9	18.4	30
	208/230-3	13.4	2.5	6.6	15.9	20
	460/3	6.4	2.5	3.3	7.7	10
CE20L-EC120	208/1	17.3	3.6	12.9	20.9	30
	230/1	15.9	4.0	14.3	19.9	30
	208/230-3	13.4	4.0	10.2	17.4	25
	460/3	6.4	4.0	4.7	8.4	12

NOTES:

1. Evaporator motor amps at 230/1/60 wired, to condensing unit control circuit.

* Evaporator motors wired to separate 115/1/60 power source.

ACE ECON-O-TROL® ELECTRICAL DATA

UNIT	VOLTS/PHASE	CONDENSING UNIT MIN. CIRCUIT AMPACITY	TOTAL EVAPORATOR MOTOR AMPS	DEFROST AMPS	ECONOTROL SYSTEM MIN. CIRCUIT AMPACITY	ECONOTROL SYSTEM MAX. FUSE SIZE AMPS
R22		2 HORSEPOWER				R22
CE20HF (All off-cycle defrost models)	208/1	20.1	*		20.1	30
	230/1	18.4	*		18.4	30
	208/230-3	15.4	*		15.4	25
	460/3	7.4	*		7.4	12
R502		2 HORSEPOWER				R502
CE20LF-EC120	208/1	23.8	3.6	12.9	27.4	40
	230/1	22.8	4.0	14.3	26.8	40
	208/230-3	16.1	4.0	10.2	20.1	30
	460/3	7.7	4.0	4.7	9.7	12
CE20LF-ECLS85	208/1	23.8	1.5	7.0	25.3	40
	230/1	22.8	1.6	8.1	24.4	40
	208-230/3	16.1	1.6	4.5	17.7	25
	460/3	7.7	1.6	2.3	8.5	12
CE20LF-ECLS130	208/1	23.8	2.3	10.3	26.1	40
	230/1	22.8	2.5	11.9	25.3	40
	208-230/3	16.1	2.5	6.6	18.6	25
	460/3	7.7	2.5	3.3	9.0	12
CE20ELF-EC120	208/1	19.7	3.6	12.9	23.3	30
	230/1	18.4	4.0	14.3	22.4	30
	208-230/3	14.2	4.0	10.2	18.2	25
	460/3	6.8	4.0	4.7	8.8	12
CE20ELF-ECLS130	208/1	19.7	2.3	10.3	22.0	30
	230/1	18.4	2.5	11.9	20.9	30
	208-230/3	14.2	2.5	6.6	16.7	25
	460/3	6.8	2.5	3.3	8.1	12
R12		3 HORSEPOWER				R12
CE32C (All off-cycle defrost models)	208/1	28.4	*		28.4	45
	230/1	25.9	*		25.9	40
	208-230/3	18.7	*		18.7	30
	460/3	8.9	*		8.9	12
CE32C-NDE150	208/1	28.4	2.3	17.3	30.7	50
	230/1	25.9	2.5	20.0	28.4	45
	208-230/3	18.7	2.5	15.9	21.2	30
	460/3	8.9	2.5	7.5	10.2	15
CE32C-NDE180	208/1	28.4	2.3	18.6	30.7	50
	230/1	25.9	2.5	21.5	28.4	45
	208-230/3	18.7	2.5	17.2	21.2	30
	460/3	8.9	2.5	8.6	10.2	15
CE32C-NDE280	208/1	28.4	3.0	21.5	31.4	50
	230/1	25.9	3.2	24.8	29.1	45
	208-230/3	18.7	3.2	19.7	21.9	30
	460/3	8.9	3.2	9.9	10.5	15
CE32C-ECLS170	208/1	28.4	3.0	13.5	31.4	50
	230/1	25.9	3.2	15.6	29.1	45
	208-230/3	18.7	3.2	8.7	21.9	30
	460/3	8.9	3.2	4.4	10.5	15

NOTES:

1. Evaporator motor amps at 230/1/60 wired, to condensing unit control circuit.

* Evaporator motors wired to separate 115/1/60 power source.

ACE ECON-O-TROL® ELECTRICAL DATA

UNIT	VOLTS/PHASE	CONDENSING UNIT MIN. CIRCUIT AMPACITY	TOTAL EVAPORATOR MOTOR AMPS	DEFROST AMPS	ECONOTROL SYSTEM MIN. CIRCUIT AMPACITY	ECONOTROL SYSTEM MAX. FUSE SIZE AMPS
R12		3 HORSEPOWER				R12
CE32C-ECLS210	208/1	28.4	3.8	16.8	32.2	50
	230/1	25.9	4.1	19.3	30.0	45
	208-230/3	18.7	4.1	10.8	22.8	30
	460/3	8.9	4.1	5.4	11.0	15
CE32C-ECLS270	208/1	28.4	4.6	20.0	33.0	50
	230/1	25.9	4.9	23.1	30.8	45
	208-230/3	18.7	4.9	12.9	23.6	30
	460/3	8.9	4.9	6.4	11.4	15
CE32C-EC120	208/1	28.4	3.6	12.9	32.0	50
	230/1	25.9	4.0	14.3	29.9	45
	208-230/3	18.7	4.0	10.2	22.7	30
	460/3	8.9	4.0	4.7	10.9	15
CE32C-EC180	208/1	28.4	3.9	16.7	32.3	50
	230/1	25.9	3.9	18.5	29.8	45
	208-230/3	18.7	3.9	13.3	22.6	30
	460/3	8.9	3.9	6.1	10.8	15
CE32C-EC240	208/1	28.4	3.9	29.2	32.3	55
	230/1	25.9	3.9	32.3	29.8	50
	208-230/3	18.7	3.9	19.7	22.6	35
	460/3	8.9	3.9	9.0	9.3	15
CE30C (All off-cycle defrost units)	208/1	31.2	*		31.2	50
	230/1	28.4	*		28.4	45
	208-230/3	20.6	*		20.6	30
	460/3	9.4	*		9.4	15
CE30C-NDE180	208/1	31.2	2.3	18.6	33.5	50
	230/1	28.4	2.5	21.5	30.9	50
	208-230/3	20.6	2.5	17.2	23.1	30
	460/3	9.4	2.5	8.6	10.7	15
CE30C(2)-NDE105	208/1	31.2	3.0	24.4	34.2	50
	230/1	28.4	3.2	28.2	31.6	50
	208-230/3	20.6	3.2	22.6	23.8	30
	460/3	9.4	3.2	10.6	11.0	15
CE30C(2)-NDE120	208/1	31.2	3.0	28.8	34.2	50
	230/1	28.4	3.2	33.2	33.2	50
	208-230-3	20.6	3.2	26.4	26.4	30
	460/3	9.4	3.2	12.4	12.4	15
CE30C-NDE-280	208/1	31.2	3.0	21.5	34.2	50
	230/1	28.4	3.2	24.8	31.6	50
	208-230/3	20.6	3.2	19.7	23.8	30
	460/3	9.4	3.2	9.9	11.0	15

NOTES:

1. Evaporator motor amps at 230/1/60 wired, to condensing unit control circuit.

* Evaporator motors wired to separate 115/1/60 power source.

ACE ECON-O-TROL® ELECTRICAL DATA

UNIT	VOLTS/PHASE	CONDENSING UNIT MIN. CIRCUIT AMPACITY	TOTAL EVAPORATOR MOTOR AMPS	DEFROST AMPS	ECONOTROL SYSTEM MIN. CIRCUIT AMPACITY	ECONOTROL SYSTEM MAX. FUSE SIZE AMPS
R12		3 HORSEPOWER				R12
CE30C-ECLS170	208/1	31.2	3.0	13.5	34.2	50
	230/1	28.4	3.2	15.6	31.6	50
	208-230/3	20.6	3.2	8.7	23.8	30
	460/3	9.4	3.2	4.4	11.0	15
CE30C-ECLS210	208/1	31.2	3.8	16.8	35.0	50
	230/1	28.4	4.1	19.3	32.5	50
	208-230/3	20.6	4.1	10.8	24.7	35
	460/3	9.4	4.1	5.4	11.5	15
CE30C-ECLS270	208/1	31.2	4.6	20.0	35.8	50
	230/1	28.4	4.9	23.1	33.3	50
	208-230/3	20.6	4.9	12.9	25.5	35
	460/3	9.4	4.9	6.4	11.9	15
CE30-EC120	230/1	31.2	3.6	12.9	34.8	50
	230/1	28.4	4.0	14.3	32.4	50
	208/230/3	20.6	4.0	10.2	24.6	35
	460/3	9.4	4.0	4.7	11.4	15
CE30C-EC180	208/1	31.2	3.9	16.7	35.1	50
	230/1	28.4	3.9	18.5	32.3	50
	208-230/3	20.6	3.9	13.3	24.5	35
	460/3	9.4	3.9	6.1	11.3	15
CE30C-EC240	208/1	31.2	3.9	29.2	35.1	60
	230/1	28.4	3.9	32.3	32.3	50
	208-230/3	20.6	3.9	19.7	24.5	40
	460/3	9.4	3.9	9.0	9.8	15
CE30L-ECLS130	208/1	26.3	2.3	10.3	28.6	45
	230/1	24.1	2.5	11.9	26.6	40
	208-230/3	17.8	2.5	6.6	20.3	30
	460/3	8.2	2.5	3.3	9.5	12
CE30L-ECLS170	208/1	26.3	3.0	13.5	29.3	45
	230/1	24.1	3.2	15.6	27.3	40
	208-230/3	17.8	3.2	8.7	21.0	30
	460/3	8.2	3.2	4.4	9.8	15
CE30L-EC120	208/1	26.3	3.6	12.9	29.9	45
	230/1	24.1	4.0	14.3	28.1	45
	208-230/3	17.8	4.0	10.2	21.8	30
	460/3	8.2	4.0	4.7	10.2	15
CE30L-EC180	208/1	26.3	3.9	16.7	30.2	45
	230/1	24.1	3.9	18.5	28.0	45
	208-230/3	17.8	3.9	13.3	21.7	30
	460/3	8.2	3.9	6.1	10.1	15
R22		3 HORSEPOWER				R22
CE30HF (All off-cycle defrost units)	208/1	28.4	*		28.4	45
	230/1	25.9	*		25.9	40
	208-230/3	18.7	*		18.7	30
	460/3	8.9	*		8.9	12

NOTES:

1. Evaporator motor amps at 230/1/60 wired, to condensing unit control circuit.

* Evaporator motors wired to separate 115/1/60 power source.

ACE ECON-O-TROL® ELECTRICAL DATA

UNIT	VOLTS/PHASE	CONDENSING UNIT MIN. CIRCUIT AMPACITY	TOTAL EVAPORATOR MOTOR AMPS	DEFROST AMPS	ECONOTROL SYSTEM MIN. CIRCUIT AMPACITY	ECONOTROL SYSTEM MAX. FUSE SIZE AMPS
R22		5 HORSEPOWER				R22
CE52HF (All off-cycle defrost models)	208/1	49.7	*		49.7	80
	230/1	45.1	*		45.1	70
	208-230/3	34.1	*		34.1	50
	460/3	15.5	*		15.5	25
R502		5 HORSEPOWER				R502
CE50LF-ECLS210	208/1	43.6	3.8	16.8	47.4	70
	230/1	39.7	4.1	19.3	43.8	70
	208-230/3	30.3	4.1	10.8	34.4	50
	460/3	13.7	4.1	5.4	15.8	25
CE50LF-ECLS270	208/1	43.6	4.6	20.0	48.2	80
	230/1	39.7	4.9	23.1	44.6	70
	208-230/3	30.3	4.9	12.9	35.2	50
	460/3	13.7	4.9	6.4	16.2	25
CE50LF-EC120	208/1	43.6	3.6	12.9	47.2	70
	230/1	39.7	4.0	14.3	43.7	70
	208-230/3	30.3	4.0	10.2	34.3	50
	460/3	13.7	4.0	4.7	15.7	25
CE50LF-EC180	208/1	43.6	3.9	16.7	47.5	70
	230/1	39.7	3.9	18.5	43.6	70
	208-230/3	30.3	3.9	13.3	34.2	50
	460/3	13.7	3.9	6.1	15.6	25
CE50LF-EC240	208/1	43.6	3.9	29.2	47.5	80
	230/1	39.7	3.9	32.3	43.6	70
	208-230/3	30.3	3.9	19.7	34.2	50
	460/3	13.7	3.9	9.0	14.1	25
CE50ELF-ECLS270	208/1	42.8	4.6	20.0	47.4	70
	230/1	38.4	4.9	23.1	43.3	70
	208-230/3	29.1	4.9	12.9	34.0	50
	460/3	13.9	4.9	6.4	16.4	25
CE 50ELF-ECLS300	208/1	42.8	5.3	23.8	48.1	80
	230/1	38.4	5.7	27.5	44.1	60
	208-230/3	29.1	5.7	15.3	34.8	50
	460/3	13.9	3.9	7.7	16.8	25
CE50ELF-EC180	208/1	42.8	3.9	16.7	46.7	70
	230/1	38.4	3.9	18.5	42.3	70
	208-230/3	29.1	3.9	13.3	33.0	50
	460/3	13.9	3.9	6.1	15.8	25
CE50ELF-EC240	208/1	42.8	3.9	29.2	46.7	80
	230/1	38.4	3.9	32.3	42.3	70
	208-230/3	29.1	3.9	19.7	33.0	50
	460/3	13.9	3.9	9.0	14.3	25
CE50ELF-EC300	208/1	42.8	7.5	29.6	50.3	80
	230/1	38.4	7.5	32.8	45.9	70
	208-230/3	29.1	7.5	23.5	36.6	50
	460/3	13.9	7.5	10.8	17.4	25

NOTES:

1. Evaporator motor amps at 230/1/60 wired, to condensing unit control circuit.

* Evaporator motors wired to separate 115/1/60 power source.

ACE ECON-O-TROL® ELECTRICAL DATA

UNIT	VOLTS/PHASE	CONDENSING UNIT MIN. CIRCUIT AMPACITY	TOTAL EVAPORATOR MOTOR AMPS	DEFROST AMPS	ECONOTROL SYSTEM MIN. CIRCUIT AMPACITY	ECONOTROL SYSTEM MAX. FUSE SIZE AMPS
R12		7½ HORSEPOWER				R12
CE77PC (All off-cycle defrost models)	208-230/3	47.1	•		47.1	70
	460/3	20.4	•		20.4	35
CE77PC-(3)NDE150	208-230/3	47.1	7.5	47.7	54.6	80
	460/3	20.4	7.5	22.5	24.2	35
CE77PC-(2)NDE280	208-230/3	47.1	6.4	49.6	53.5	80
	460/3	20.4	6.4	39.4	39.4	40
CE77PC-(4)NDE180	208-230/3	47.1	10.0	68.8	68.8	80
	460/3	20.4	10.0	34.4	34.4	40
CE77PC-ECLS380	208-230/3	47.1	7.3	19.5	54.4	80
	460/3	20.4	7.3	9.9	24.1	35
CE77PC-ECLS540	208-230/3	47.1	9.8	25.8	56.9	80
	460/3	20.4	9.8	12.8	25.3	35
CE77PC-(3)ECLS210	208-230/3	47.1	12.3	32.4	59.4	80
	460/3	20.4	12.3	16.2	26.6	40
CE77PC-EC360	208-230/3	47.1	3.9	24.3	51.0	80
	460/3	20.4	3.9	11.7	20.7	35
CE77PC-EC480	208-230/3	47.1	5.9	27.6	52.0	80
	460/3	20.4	5.9	12.7	20.9	35
CE76PL-ECLS270	208-230/3	41.7	4.9	12.9	46.6	70
	460/3	18.7	4.9	6.4	21.2	30
CE76PL-ECLS380	208-230/3	41.7	7.3	19.5	49.0	70
	460/3	18.7	7.3	9.9	22.4	30
CE76PL-EC360	208-230/3	41.7	3.9	24.3	45.6	70
	460/3	18.7	3.9	11.7	19.0	30
R22		7½ HORSEPOWER				R22
CE75HF (All off-cycle defrost models)	208-230/3	50.5	•		50.5	80
	460/3	22.2	•		22.2	40
R502		7½ HORSEPOWER				R502
CE76PLF-ECLS340	208-230/3	50.5	6.4	17.4	56.9	80
	460/3	22.2	6.4	8.8	25.4	40
CE76PLF-ECLS380	208-230/3	50.5	7.3	19.5	57.8	90
	460/3	22.2	7.3	9.8	25.9	40
CE76PLF-EC240	208-230/3	50.5	3.9	19.7	54.4	90
	460/3	22.2	3.9	9.0	22.6	40
CE76PLF-EC360	208-230/3	50.5	3.9	24.3	54.4	90
	460/3	22.2	3.9	11.7	22.5	40
CE77PELF-ECLS380	208-230/3	47.1	7.3	19.5	54.4	80
	460/3	20.4	7.3	9.9	24.1	35
CE77PELF-ECLS420	208-230/3	47.1	8.2	21.6	55.3	80
	460/3	20.4	8.2	10.8	24.5	35
CE77PELF-EC240	208-230/3	47.1	3.9	19.7	51.0	80
	460/3	20.4	3.9	9.0	20.8	35
CE77PELF-EC360	208-230/3	47.1	3.9	24.3	51.0	80
	460/3	20.4	3.9	11.7	20.7	35
CE77PELF-EC420	208-230/3	47.1	7.8	33.0	54.9	80
	460/3	20.4	7.8	15.1	22.7	35

NOTES:

1. Evaporator motor amps at 230/1/60 wired, to condensing unit control circuit.

• Evaporator motors wired to separate 115/1/60 power source.

ACE ECON-O-TROL® ELECTRICAL DATA

UNIT	VOLTS/PHASE	CONDENSING UNIT MIN. CIRCUIT AMPACITY	TOTAL EVAPORATOR MOTOR AMPS	DEFROST AMPS	ECONOTROL SYSTEM MIN. CIRCUIT AMPACITY	ECONOTROL SYSTEM MAX. FUSE SIZE AMPS
R502		3 HORSEPOWER				R502
CE30LF-ECLS170	208/1	28.4	3.0	13.5	31.4	50
	230/1	25.9	3.2	15.6	29.1	45
	208-230/3	18.7	3.2	8.7	21.9	30
	460/3	8.8	3.2	4.4	10.4	15
CE30LF-EC120	208/1	28.4	3.6	12.9	32.0	50
	230/1	25.9	4.0	14.3	29.9	45
	208-230/3	18.7	4.0	10.2	22.7	30
	460/3	8.8	4.0	4.7	10.8	15
CE30LF-ECLS130	208/1	28.4	2.3	10.3	30.7	50
	230/1	25.9	2.5	11.9	28.4	45
	208-230/3	18.7	2.5	6.6	21.2	30
	460/3	8.8	2.5	3.3	10.1	15
CE30LF-EC180	208/1	28.4	3.9	16.7	32.3	50
	230/1	25.9	3.9	18.5	29.8	45
	208-230/3	18.7	3.9	13.3	22.6	30
	460/3	8.8	3.9	6.1	10.7	15
CE32ELF-ECLS170	208/1	28.4	3.0	13.5	31.4	50
	230/1	25.9	3.2	15.6	29.1	45
	208-230/3	18.7	3.2	8.7	21.9	30
	460/3	8.9	3.2	4.4	10.5	15
CE32ELF-ECLS210	208/1	28.4	3.8	16.8	32.2	50
	230/1	25.9	4.1	19.3	30.0	45
	208-230/3	18.7	4.1	10.8	22.8	30
	460/3	8.9	4.1	5.4	11.0	15
CE32ELF-EC120	208/1	28.4	3.6	12.9	32.0	50
	230/1	25.9	4.0	14.3	29.9	45
	208-230/3	18.7	4.0	10.2	22.7	30
	460/3	8.9	4.0	4.7	10.9	15
CE32ELF-EC180	208/1	28.4	3.9	16.7	32.3	50
	230/1	25.9	3.9	18.5	29.8	45
	208-230/3	18.7	3.9	13.3	22.6	30
	460/3	8.9	3.9	6.1	10.8	15
CE30ELF-ECLS210	208/1	31.2	3.8	16.8	35.0	50
	230/1	28.4	4.1	19.3	32.5	50
	208-230/3	20.6	4.1	10.8	24.7	35
	460/3	9.4	4.1	5.4	11.5	15
CE30ELF-EC120	208/1	31.2	3.6	12.9	34.8	50
	230/1	28.4	4.0	14.3	32.4	50
	208-230/3	20.6	4.0	10.2	24.6	35
	460/3	9.4	4.0	4.7	11.4	15
CE30ELF-EC180	208/1	31.2	3.9	16.7	35.1	50
	230/1	28.4	3.9	18.5	32.3	50
	208-230/3	20.6	3.9	13.3	24.5	35
	460/3	9.4	3.9	6.1	11.3	15
CE30ELF-EC240	208/1	31.2	3.9	29.2	35.1	60
	230/1	28.4	3.9	32.3	32.3	50
	208-230/3	20.6	3.9	19.7	24.5	40
	460/3	9.4	3.9	9.0	9.8	15

NOTES:

1. Evaporator motor amps at 230/1/60 wired, to condensing unit control circuit.

ACE ECON-O-TROL® ELECTRICAL DATA

UNIT	VOLTS/PHASE	CONDENSING UNIT MIN. CIRCUIT AMPACITY	TOTAL EVAPORATOR MOTOR AMPS	DEFROST AMPS	ECONOTROL SYSTEM MIN. CIRCUIT AMPACITY	ECONOTROL SYSTEM MAX. FUSE SIZE AMPS
R12		5 HORSEPOWER				R12
CE50C (All off-cycle defrost models)	208/1	42.8	*		42.8	60
	230/1	38.4	*		38.4	60
	208-230/3	29.1	*		29.1	50
	460/3	13.9	*		13.9	25
CE50C-NDE280	208/1	42.8	3.0	21.5	45.8	70
	230/1	38.4	3.2	24.8	41.6	70
	208-230/3	29.1	3.2	19.7	32.3	50
	460/3	13.9	3.2	9.9	15.5	25
CE50C-(2)NDE280	208/1	42.8	6.0	43.0	48.8	80
	230/1	38.4	6.4	49.6	49.6	70
	208-230/3	29.1	6.4	39.4	39.4	50
	460/3	13.9	6.4	19.8	19.8	25
CE50C-(3)NDE150	208/1	42.8	6.9	51.9	51.9	80
	230/1	38.4	7.5	60.0	60.0	70
	208-230/3	29.1	7.5	47.7	47.7	50
	460/3	13.9	7.5	22.5	22.5	25
CE50C-ECLS210	208/1	42.8	3.8	16.8	46.6	70
	230/1	38.4	4.1	19.3	42.5	70
	208-230/3	29.1	4.1	10.8	33.2	50
	460/3	13.9	4.1	5.4	16.0	25
CE50C-ECLS270	208/1	42.8	4.6	20.0	47.4	70
	230/1	38.4	4.9	23.1	43.3	70
	208-230/3	29.1	4.9	12.9	34.0	50
	460/3	13.9	4.9	6.4	16.4	25
CE50C-ECLS380	208/1	42.8	6.8	30.3	49.6	80
	230/1	38.4	7.3	34.9	45.7	70
	208-230/3	29.1	7.3	19.5	36.4	50
	460/3	13.9	7.3	9.8	17.6	25
CE50C-EC180	208/1	42.8	3.9	16.7	46.7	70
	230/1	38.4	3.9	18.5	42.3	60
	208-230/3	29.1	3.9	13.3	33.0	50
	460/3	13.9	3.9	6.1	15.8	25
CE50C-EC240	208/1	42.8	3.9	29.2	46.7	80
	230/1	38.4	3.9	32.3	42.3	70
	208-230/3	29.1	3.9	19.7	33.0	50
	460/3	13.9	3.9	9.0	14.3	25
CE50C-EC360	208/1	42.8	3.9	36.2	46.7	80
	230/1	38.4	3.9	40.0	42.3	70
	208-230/3	29.1	3.9	24.3	33.0	50
	460/3	13.9	3.9	11.7	14.2	25
CE51PL-ECLS210	208/1	35.9	3.8	16.8	39.7	60
	230/1	32.8	4.1	19.3	36.9	60
	208-230/3	25.3	4.1	10.8	29.4	47
	460/3	11.7	4.1	5.4	13.8	20
CE51PL-ECLS270	208/1	35.9	4.6	20.0	40.5	60
	230/1	32.8	4.9	23.1	37.7	60
	208-230/3	25.3	4.9	12.9	30.2	45
	460/3	11.7	4.9	6.4	14.2	20
CE51PL-EC240	208/1	35.9	3.9	29.2	39.8	60
	230/1	32.8	3.9	32.3	36.7	60
	208-230/3	25.3	3.9	19.7	29.2	50
	460/3	11.7	3.9	9.0	12.1	20

NOTES:

1. Evaporator motor amps at 230/1/60 wired, to condensing unit control circuit.

* Evaporator motors wired to separate 115/1/60 power source.

ACE ECON-O-TROL ELECTRICAL DATA

UNIT	VOLTS/PHASE	CONDENSING UNIT MIN. CIRCUIT AMPACITY	TOTAL EVAPORATOR MOTOR AMPS	DEFROST AMPS	ECONOTROL SYSTEM MIN. CIRCUIT AMPACITY	ECONOTROL SYSTEM MAX. FUSE SIZE AMPS
R12		10 HORSEPOWER				R12
CE101PC (All off-cycle defrost models)	208-230/3	60.6	*		60.6	100
	460/3	25.4	*		25.4	40
CE101PC-(2)NDE280	208-230/3	60.6	6.4	39.4	67.0	100
	460/3	25.4	6.4	19.8	28.6	45
CE101PC-(4)NDE180	208-230/3	60.6	10.0	68.8	70.6	110
	460/3	25.4	10.0	34.4	34.4	45
CE101PC-(3)NDE280	208-230/3	60.6	9.6	59.1	70.2	110
	460/3	25.4	9.6	29.3	30.2	45
CE101PC-ECLS480	208-230/3	60.6	9.0	23.7	69.6	110
	460/3	25.4	9.0	11.8	29.9	45
CE101PC-ECLS540	208-230/3	60.6	9.8	25.8	70.4	110
	460/3	25.4	9.8	12.8	30.3	45
CE101PC-(3)ECLS210	208-230/3	60.6	12.3	32.4	72.9	110
	460/3	25.4	12.3	16.2	31.6	45
CE101PC-EC360	208-230/3	60.6	3.9	24.3	64.5	100
	460/3	25.4	3.9	11.7	25.7	45
CE101PC-EC480	208-230/3	60.6	5.9	27.6	66.5	110
	460/3	25.4	5.9	12.7	25.9	45
CE101PC-EC720	208-230/3	60.6	7.8	36.7	68.4	110
	460/3	25.4	7.8	16.8	26.0	50
CE104PL-(1)ECLS340	208-230/3	53.6	6.8	17.4	60.4	90
	460/3	23.4	6.8	8.7	30.2	45
CE104PL-(1)ECLS480	208-230/3	53.6	9.4	23.7	62.9	90
	460/3	23.4	9.4	11.8	32.8	45
CE104PL-(1)EC360	208-230/3	53.6	3.9	24.3	57.5	90
	460/3	23.4	3.9	11.7	27.3	45
CE104PL-(1)EC480	208-230/3	53.6	5.9	27.6	59.5	90
	460/3	23.4	5.9	12.7	29.3	45
R22		10 HORSEPOWER				R22
CE100PHF (All off-cycle defrost models)	208-230/3	60.6	*		60.6	100
	460/3	25.9	*		25.9	40
R502		10 HORSEPOWER				R502
CE101PELF-ECLS480	208-230/3	73.0	9.0	23.7	82.0	125
	460/3	32.2	9.0	11.8	36.7	50
CE101PELF-ECLS540	208-230/3	73.0	9.8	25.8	82.8	125
	460/3	32.2	9.8	12.8	37.1	60
CE101PELF-EC360	208-230/3	73.0	3.9	24.3	76.9	125
	460/3	32.2	3.9	11.7	32.5	50
CE101PELF-EC480	208-230/3	73.0	5.9	27.6	78.9	125
	460/3	32.2	5.9	12.7	32.7	60
CE101PELF-EC540	208-230/3	73.0	7.8	37.6	80.8	125
	460/3	32.2	7.8	17.8	34.4	60

NOTES:

1. Evaporator Motor Amps at 230/1/60, wired to condensing unit control circuit.

* Evaporator Motors wired to separate 115/1/60 power source.

DUNHAM-BUSH

AIR CONDITIONING, REFRIGERATION, HEATING PRODUCTS AND ACCESSORIES

MAIN OFFICES

175 SOUTH STREET WEST HARTFORD, CONNECTICUT 06110

FACTORIES

WEST HARTFORD DIVISION
179 South Street
West Hartford, Connecticut
06110

HARRISONBURG DIVISION
101 Burgess Road
Harrisonburg, Virginia
22801

MARSHALLTOWN DIVISION
811 East Main Street
Marshalltown, Iowa
50158

RIVERSIDE DIVISION
1850 Massachusetts Ave.
Riverside, California
92507

SUBSIDIARIES

DUNHAM-BUSH of Canada Limited
140 Wendell Avenue
Weston, Ontario

DUNHAM-BUSH, LTD.
Fitzherbert Road, Farlington
Portsmouth, Hampshire, England

DUNHAM-BUSH INTERNATIONAL: 175 South Street, West Hartford, Connecticut 06110, U.S.A.
CABLE: DUNBUSH or TELEX: 994469

SALES OFFICES

ALABAMA
Birmingham
Mobile

ARIZONA
Phoenix

ARKANSAS
Little Rock

CALIFORNIA
Arcadia
Los Angeles
Sacramento
San Diego
San Francisco

COLORADO
Denver

CONNECTICUT
Hartford
Bloomfield

FLORIDA
Clearwater
Jacksonville
Miami
Orlando

GEORGIA
Atlanta

HAWAII
Honolulu

ILLINOIS
Chicago
Peoria
Rockford

INDIANA
Indianapolis
Michigan City

IOWA
Des Moines

KANSAS
Lenexa

KENTUCKY
Louisville

LOUISIANA
New Orleans
Shreveport

MAINE
Lewiston

MARYLAND
Baltimore
Silver Spring

MASSACHUSETTS
Boston
Springfield

MICHIGAN
Detroit
Grand Rapids
Kalamazoo

MINNESOTA
Minneapolis

MISSISSIPPI
Jackson

MISSOURI
Kansas City
St. Louis

MONTANA
Billings
Great Falls

NEBRASKA
Omaha

NEW JERSEY
Hazlet
Little Falls
Union

NEW MEXICO
Albuquerque

NEW YORK
Albany
Buffalo
New York City
Rochester
Syracuse

NORTH CAROLINA
Charlotte
Greensboro

OHIO
Akron
Cincinnati
Cleveland
Columbus
Dayton
Delaware
Toledo

OKLAHOMA
Oklahoma City
Tulsa

OREGON
Portland

PENNSYLVANIA
Harrisburg
Philadelphia
Pittsburgh
Pittston

PUERTO RICO
Caparra Heights

RHODE ISLAND
Providence

TENNESSEE
Memphis
Knoxville
Nashville

TEXAS
Dallas
El Paso
Houston
Lubbock
San Antonio

UTAH
Salt Lake City

VIRGINIA
Alexandria
Harrisonburg
Richmond
Virginia Beach

WASHINGTON
Seattle
Spokane

WEST VIRGINIA
Barboursville

WISCONSIN
Milwaukee

DUNHAM-BUSH, INC. • West Hartford, Connecticut 06110, U.S.A.

5129-3-10M-179

One of The Signal Companies

Exhibit 7-10

FORM NO. 5140B

Supersedes Form No. 5140A

DUNHAM-BUSH

INSTALLATION INSTRUCTIONS

LOW SILHOUETTE ELECTRIC DEFROST UNIT COOLERS ECLS SERIES 'C'

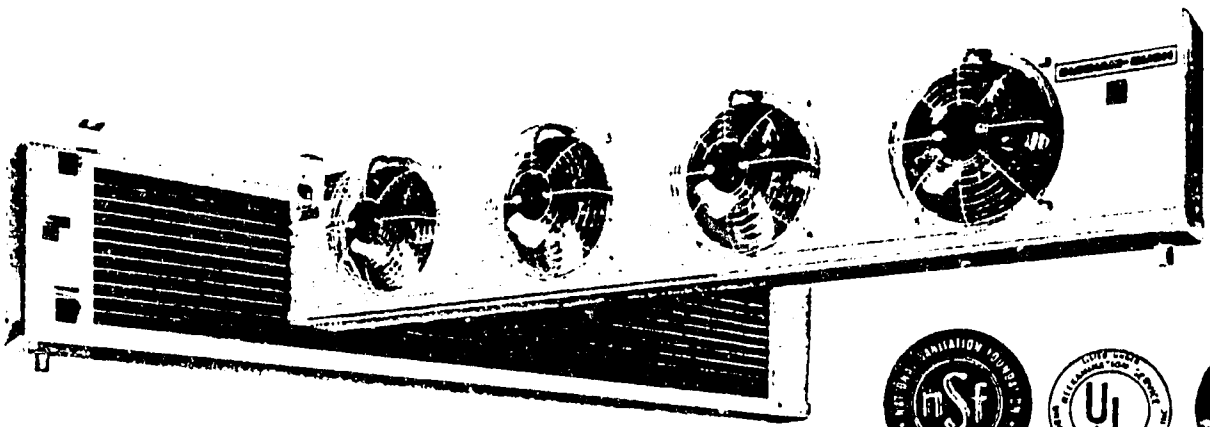

Dunham-Bush ECLS units are suitable for installation in room temperature from 32° to -30°. They can be used with R-12, R-22, or R-502.

INSTALLATION OF UNIT

The ECLS unit should be hung from the ceiling of the refrigerated space using the mounting channels provided on the unit. Since these channels establish the proper pitch of the drain pan, care should be taken to be sure that the ceiling is level. Units should be hung with the back of the unit a **minimum of one foot away from the wall.** Installations near or over the refrigerator door should be avoided as this will have an adverse effect on proper defrosting.

REFRIGERATION CYCLE

Refrigerant piping should be installed in accordance with good practice. A liquid line solenoid valve (230 volt coil) **must** be used. All ECLS unit coolers require externally-equalized expansion valves.

Refrigerant connections are made all at one end of the unit. Suction and liquid connections are brought out the back of the unit for easy field connection. An auxiliary drip pan is provided with the unit for field installation under the expansion valve. The bulb of the expansion valve should be strapped to the suction line. **Expansion valves are not furnished with the unit.**

ECLS(C) ELECTRIC DEFROST UNIT COOLERS & SYSTEMS

Model	Fans		Motor Watts @ 240V†	Connections			Electrical Defrost Data @ 240 Volt**		Def Kit No.	Approx. Shipping Weight
	Qty.	Size		Liquid FL	Suction OD	Drain OD	Amps	Watts		
ECLS 45	1	10"	105	1/2"	5/8"	1 1/8"	4.38	1,050	1D	19
ECLS 65	2	10"	210	1/2"	5/8"	1 1/8"	6.25	1,500	1D	28
ECLS 85	2	10"	230	1/2"	7/8"	1 1/8"	8.13	1,950	1D	33
ECLS 130	3	10"	315	1/2"	7/8"	1 1/8"	11.88	2,850	1D	48
ECLS 170	4	10"	420	1/2"	1 1/8"	1 1/8"	15.63	3,750	1D	64
ECLS 210	5	10"	525	1/2"	1 1/8"	1 1/8"	19.38	4,650	1D	77
ECLS 270	6	10"	630	5/8"	1 1/8"	1 1/8"	23.13	5,550	1D	92
ECLS 300 DUAL (1-ECLS 130 & 1-ECLS 170)	3	10"	315	1/2"	7/8"	1 1/8"	27.51	6,600	1DR	112
	4	10"	420	1/2"	1 1/8"	1 1/8"				
ECLS 340 DUAL (2-ECLS 170)	4	10"	420	1/2"	1 1/8"	1 1/8"	31.26	7,500	1DR	123
	4	10"	420	1/2"	1 1/8"	1 1/8"				
ECLS 380 DUAL (1-ECLS 170 & 1-ECLS 210)	4	10"	420	1/2"	1 1/8"	1 1/8"	35.01	8,400	2DR	141
	5	10"	525	1/2"	1 1/8"	1 1/8"				
ECLS 420 DUAL (2-ECLS 210)	5	10"	525	1/2"	1 1/8"	1 1/8"	38.76	9,300	2DR	154
	5	10"	525	1/2"	1 1/8"	1 1/8"				
ECLS 480 DUAL (1-ECLS 210 & 1-ECLS 270)	5	10"	525	1/2"	1 1/8"	1 1/8"	42.51	10,200	2DR	169
	6	10"	630	5/8"	1 1/8"	1 1/8"				
ECLS 540 DUAL (2-ECLS 270)	6	10"	630	5/8"	1 1/8"	1 1/8"	46.25	11,100	2DR	184
	6	10"	630	5/8"	1 1/8"	1 1/8"				

† Optional 120/1/60 fan motors are available on special order.

** Optional 480 volt single phase defrost heaters are available on special order. 480 volt heater amps will be 50% of 240 volt data given above. Defrost heaters may be field changed for three phase operation, 240 volt standard unit or 480 volt special.

DIMENSIONS AND CONNECTIONS

MODEL	DIMENSIONS		
	A	B	C
ECLS 45	27 13/16	18½	–
ECLS 65	36 9/16	27¼	–
ECLS 85	45 9/16	36	–
ECLS 130	62 13/16	53½	–
ECLS 170	80 9/16	71	–
ECLS 210	97 13/16	88½	44¼
ECLS 270	115 9/16	106	53

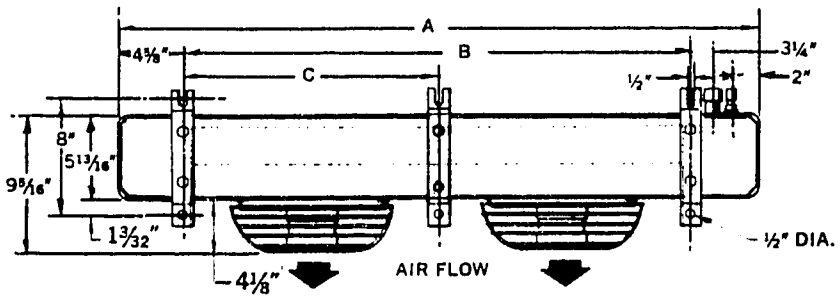

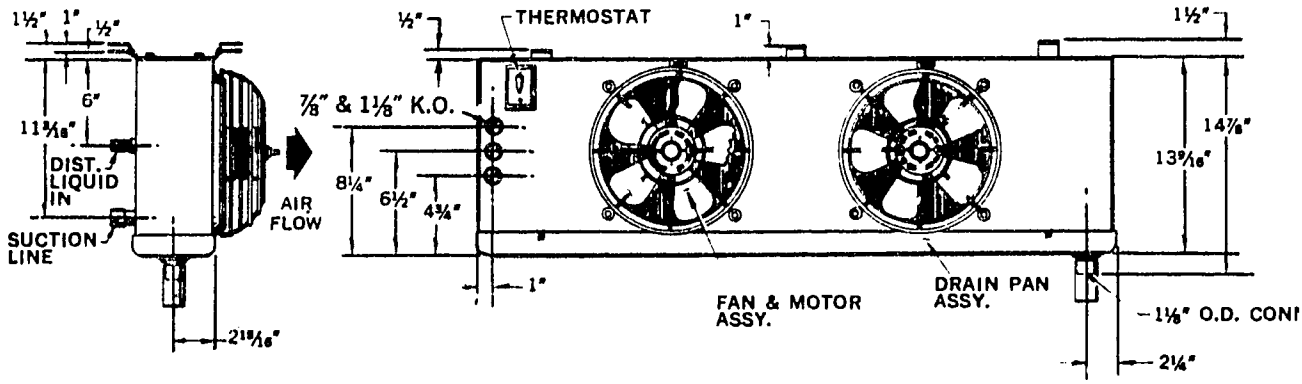

DRAIN LINE

The drain line should be run with 7/8" O.D. minimum tubing and should be suitably pitched. The drain line should be trapped at the warm end to prevent entry of warm air into the refrigerated area.

DRAIN LINE HEATER SELECTION

240 Volt			
Part No.	Length (Ft.)	Watts	Amps
210042	12	72	.3
210039	17	102	.4
210035	30	180	.7
210037	40	240	1.0
210040	80	480	2.0

Where the nature of the installation makes it impossible to pitch the drain line properly, an electrical drain line heater is recommended.

For the correct length of drain line heater cable, use approximately 5 feet of cable for each running foot of drain line in the refrigerated area. In order to minimize the possibility of cable burnouts, do not "criss cross", "overwrap", or insulate the drain line heater. Wiring for drain line heaters is shown on the attached wiring diagrams.

ELECTRIC DEFROST

ECLS units are constructed to defrost with 208/230/1/60 electrical supply. Field wiring should be installed in accordance with local and National Electrical Codes.

Kit components are shipped each in its own NEMA enclosure for field installation.

ECLS ELECTRIC DEFROST COMBINATIONS

ECLS SYSTEM	EVAPORATOR	208/230/1/60	
ECLS – 45	ECLS – 45	KIT 1D	Dia. A1–35348
ECLS – 65	ECLS – 65	KIT 1D	Dia. A1–35348
ECLS – 85	ECLS – 85	KIT 1D	Dia. A1–35348
ECLS – 130	ECLS – 130	KIT 1D	Dia. A1–35348
ECLS – 170	ECLS – 170	KIT 1D	Dia. A1–35348
ECLS – 210	ECLS – 210	KIT 1D	Dia. A1–35348
ECLS – 270	ECLS – 270	KIT 1D	Dia. A1–35348
ECLS – 300	ECLS – 130 ECLS – 170	KIT 1DR	Dia. A1–35196
ECLS – 340	(2) ECLS – 170	KIT 1DR	Dia. A1–35196
ECLS – 380	ECLS – 170 ECLS – 210	KIT 2DR	Dia. A1–35343
ECLS – 420	(2) ECLS – 210	KIT 2DR	Dia. A1–35343
ECLS – 480	ECLS – 210 ECLS – 270	KIT 2DR	Dia. A1–35343
ECLS – 540	(2) ECLS – 270	KIT 2DR	Dia. A1–35343

SEQUENCE OF OPERATION

The wiring diagram shows the unit in the normal refrigeration position. Switch "A" in the time clock is closed and provides power to the fan motors and to the liquid line solenoid.

1. When the time clock calls for a defrost, switch "A" opens and switch "B" closes.
2. When switch "A" opens, the fan motors stop and the liquid line solenoid closes, causing the compressor to pump down and stop on its own low pressure cut-out switch.
3. When switch "B" closes, electrical current is supplied to the defrost heaters which warm the metal of the coil causing the ice to melt.
4. When the ice is melted, the temperature of the metal rises above 32°F. The "limit thermostat" installed in the evaporator senses this rising temperature. When the thermostat setting is reached, the switch on the thermostat leading to the motors opens and the switch leading to the "reset solenoid" (terminal strip position 4) closes. This terminates the defrost.
5. When the thermostat energizes the circuit through terminal strip position 4 to the "reset solenoid", the clock switches return to their original position with "A" closed and "B" open.
6. The solenoid valve is now energized and opens, permitting the compressor to run and cool down the metal in the coil.
7. The fans cannot run because the "limit thermostat" is in the terminating position, holding the motor circuit open.
8. When the coil temperature is below freezing, the "limit thermostat" returns to its original position, permitting the fan motors to run. The unit is now back on normal cycle.
9. On multiple evaporator installations, the sequence is the same except that each evaporator will shut off its own defrost current supply when it is defrosted **independent of the other evaporator** and will then sit idle until the defrost sequence is completed by the other evaporator. This prevents overheating of the individual evaporators.

FIELD ADJUSTMENT

After the unit has operated long enough to settle down and the refrigerated space has pulled down to the approximate operating temperature, the expansion valve should be carefully adjusted for proper distribution and feed. This is essential to assure uniform frost formation on the coil.

The number of defrosts per day and the time at which they occur is controlled by small pins which screw into holes provided on the outer dial of the time clock. It is suggested that an initial setting for two or three defrosts per 24 hours be used. If ice build up is heavy, additional defrost per 24 hour period may be necessary.

Defrost is terminated by a factory installed switch which has an adjustment knob on the back side of the unit. This control carries the legend "Duration – Shorter Longer". For initial start up, it is recommended that the defrost control be set towards the word "Shorter" as far as it will go. If this does not provide a long enough defrost to completely clear the coil of frost, a slightly longer defrost can be used. It is essential that all frost be clear from the coil during each defrost period.

A normal defrost requires from 15 to 30 minutes and is terminated by the temperature sensing defrost control. For protection of the refrigerator and its contents, a "Fail Safe" control is provided on the time clock which will terminate the defrost at a pre-set time limit, regardless of the function of the defrost control. This "Fail Safe" is adjusted with a small pointer on the dial of the time clock. A setting of 35 minutes is suggested.

SPECIFICATIONS FOR CONTROL KITS

KIT NO.	CURRENT	COMPONENTS	DUNHAM-BUSH PART NUMBER
1–D	208/230/1/60	(1) Timer	210447
1–DR	108/230/1/60	(1) Timer (2) DPDT Relay (3) Relay Case	210447 210324 210627
2–DR	208/230/1/60	(1) Timer (2) DPDT Relay (2) Relay Case (1) 2 Pole 40 AMP Contactor	210447 210324 210627 210425

KIT 1 D
ECLS-45 THRU ECLS-250
208/230/1/60
SINGLE EVAPORATOR SYSTEMS.
DWG. A1-35348

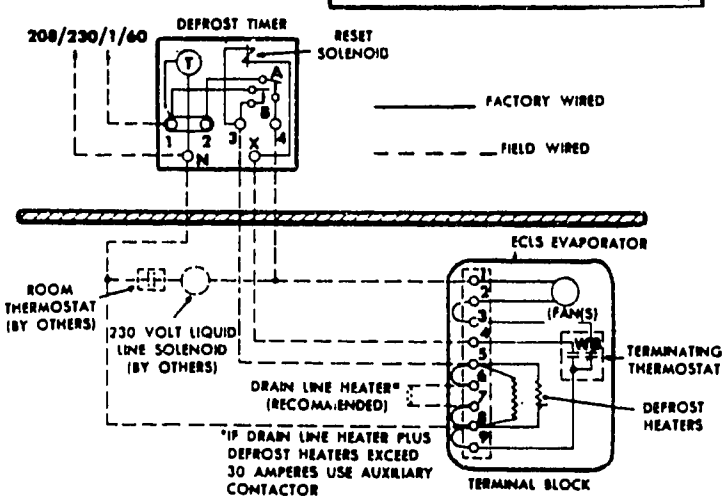

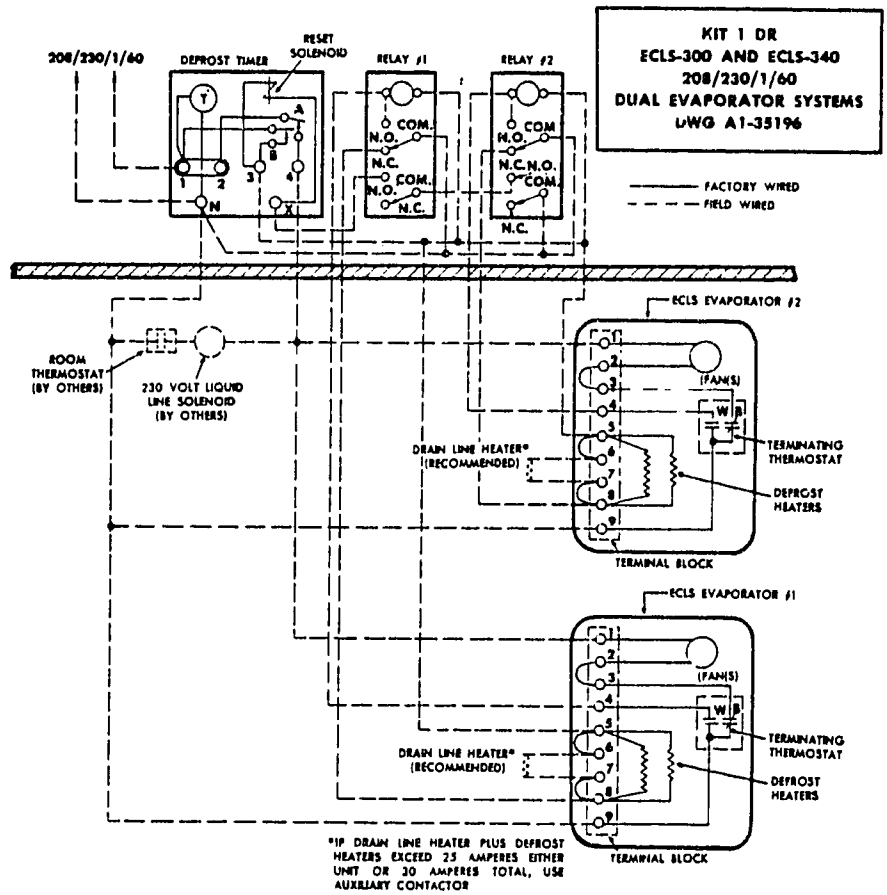
KIT 1 DR
ECLS-300 AND ECLS-340
208/230/1/60
DUAL EVAPORATOR SYSTEMS
DWG A1-35196
208/230/1/60
DEFROST TIMER
RESET SOLENOID
RELAY #1
RELAY #2
FACTORY WIRED
FIELD WIRED
ECLS EVAPORATOR #2
ROOM THERMOSTAT (BY OTHERS)
230 VOLT LIQUID LINE SOLENOID (BY OTHERS)
(FAN(S))
TERMINATING THERMOSTAT
DRAIN LINE HEATER* (RECOMMENDED)
DEFROST HEATERS
TERMINAL BLOCK
ECLS EVAPORATOR #1
*IF DRAIN LINE HEATER PLUS DEFROST HEATERS EXCEED 25 AMPERES EITHER UNIT OR 30 AMPERES TOTAL, USE AUXILIARY CONTACTOR

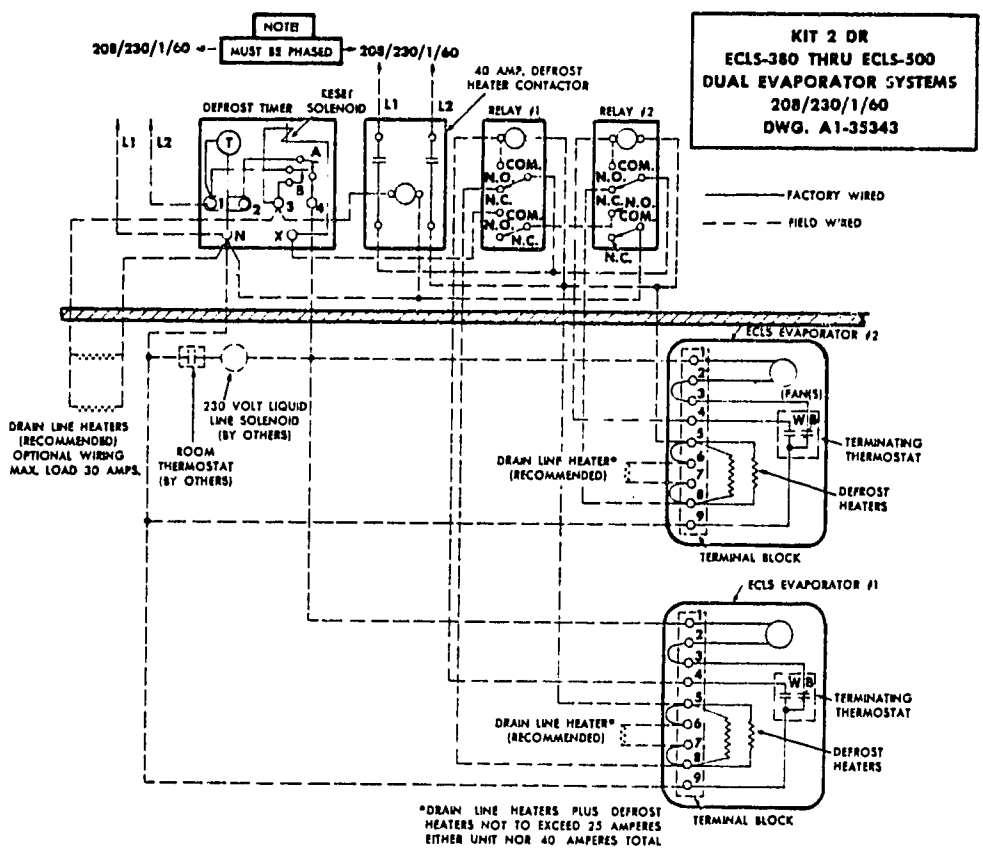
KIT 2 DR
ECLS-380 THRU ECLS-500
DUAL EVAPORATOR SYSTEMS
208/230/1/60
DWG. A1-35343
NOTE!
MUST BE PHASED
208/230/1/60
40 AMP. DEFROST HEATER CONTACTOR
DEFROST TIMER
RESET SOLENOID
RELAY #1
RELAY #2
FACTORY WIRED
FIELD WIRED
ECLS EVAPORATOR #2
DRAIN LINE HEATERS (RECOMMENDED) OPTIONAL WIRING MAX. LOAD 30 AMPS.
230 VOLT LIQUID LINE SOLENOID (BY OTHERS)
ROOM THERMOSTAT (BY OTHERS)
(FAN(S))
TERMINATING THERMOSTAT
DRAIN LINE HEATER* (RECOMMENDED)
DEFROST HEATERS
TERMINAL BLOCK
ECLS EVAPORATOR #1
*DRAIN LINE HEATERS PLUS DEFROST HEATERS NOT TO EXCEED 25 AMPERES EITHER UNIT NOR 40 AMPERES TOTAL

EXHIBIT 2-11

FORM 6139B

SUPERSEDES 6139A AND 6139-2

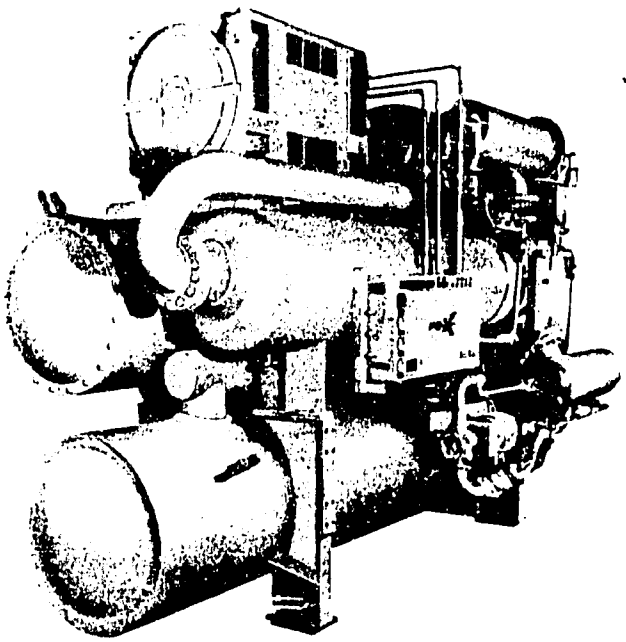

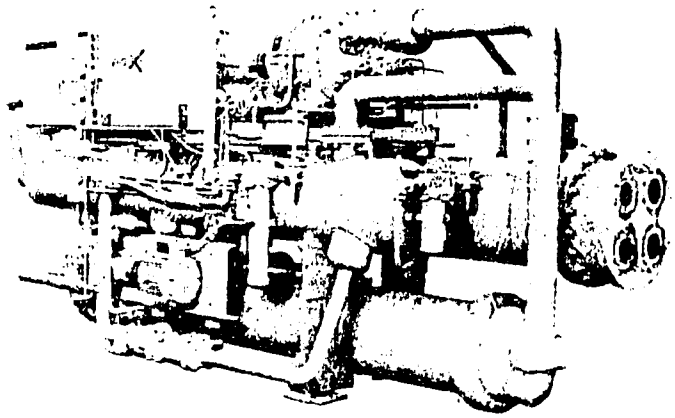

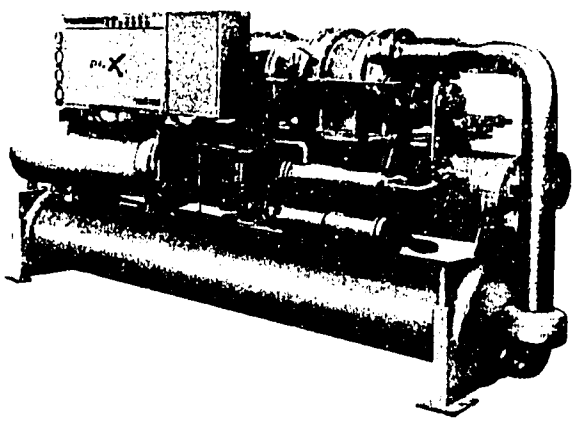

DUNHAM-BUSH

"PCX-H" "PCX-O" "PCX-OHR" & "PCX" PACKAGED CHILLERS

WITH RECIPROCATING AND ROTARY TYPE UNITS

INSTALLATION, OPERATION AND MAINTENANCE INSTRUCTIONS

TYPICAL UNIT COMPONENTS

PCX-O PACKAGED CHILLER (DIRECT EXPANSION)

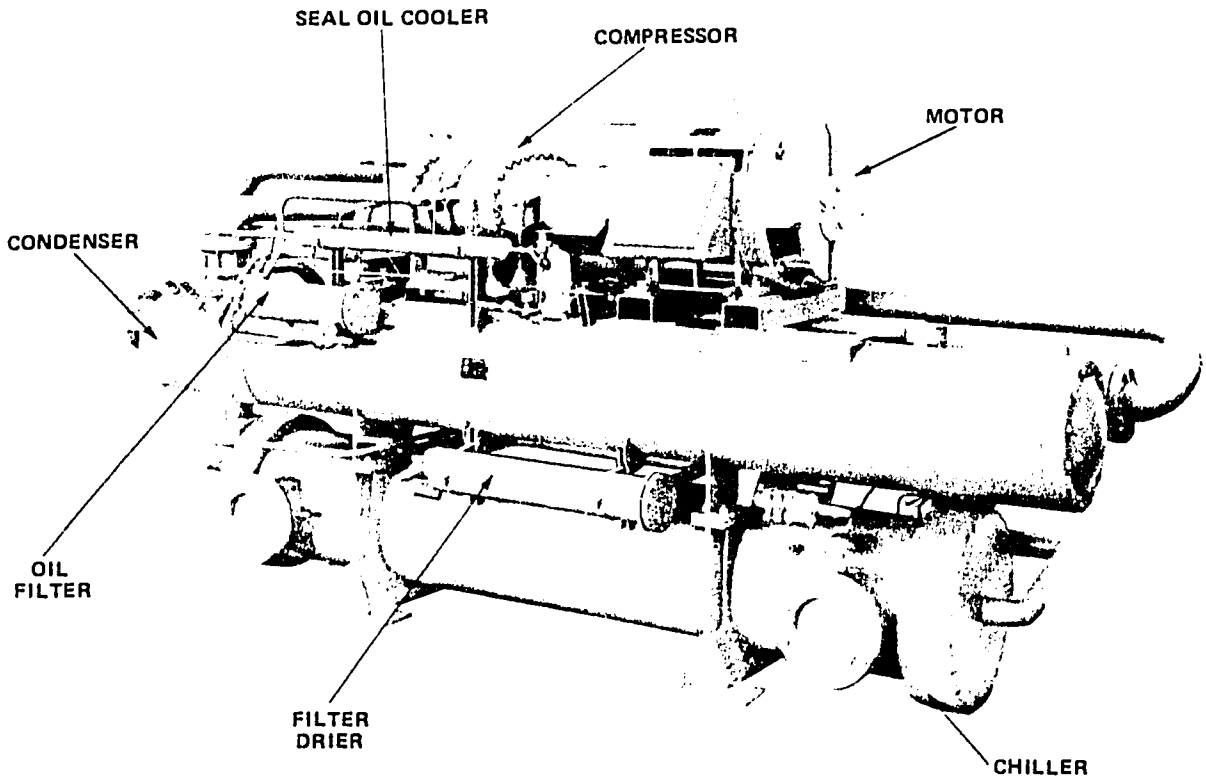

PCX-OHR HEAT RECLAIM PACKAGED CHILLER (DIRECT EXPANSION)

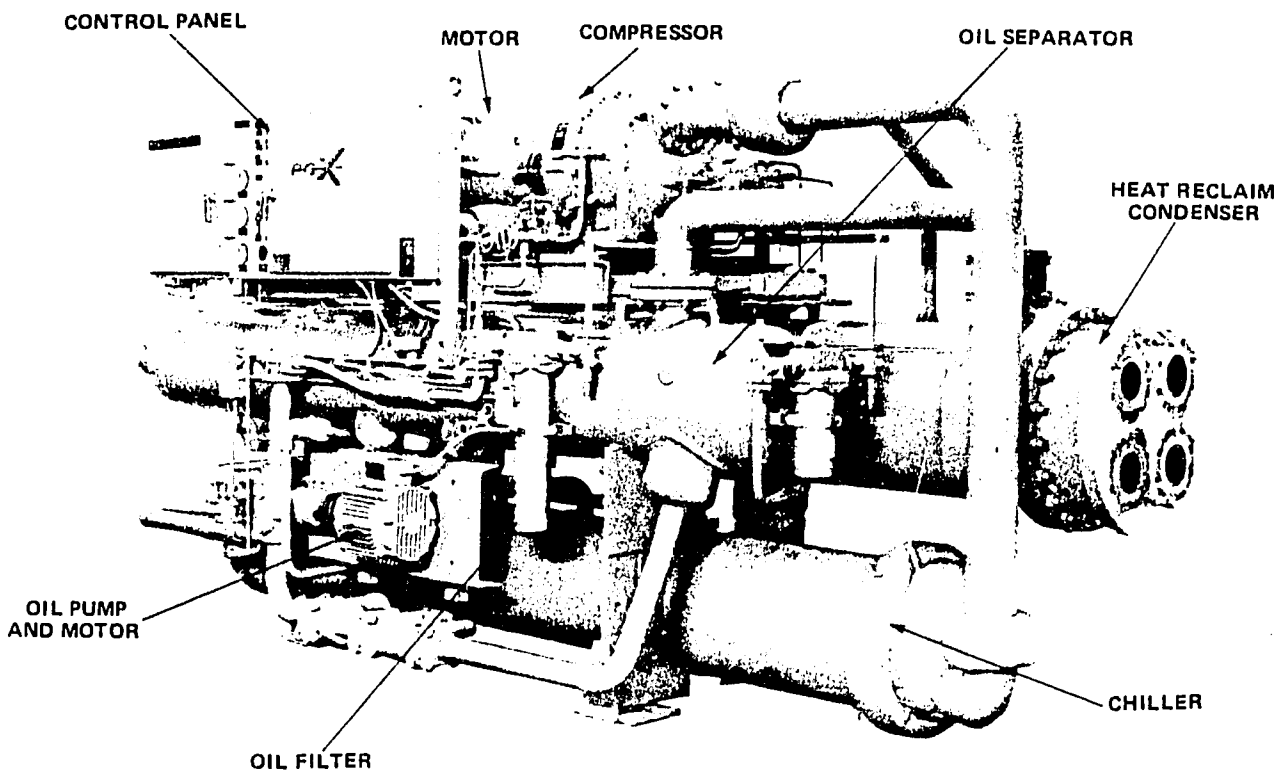

TYPICAL UNIT COMPONENTS

IPCX-O INDUSTRIAL PACKAGED CHILLER (DIRECT EXPANSION)

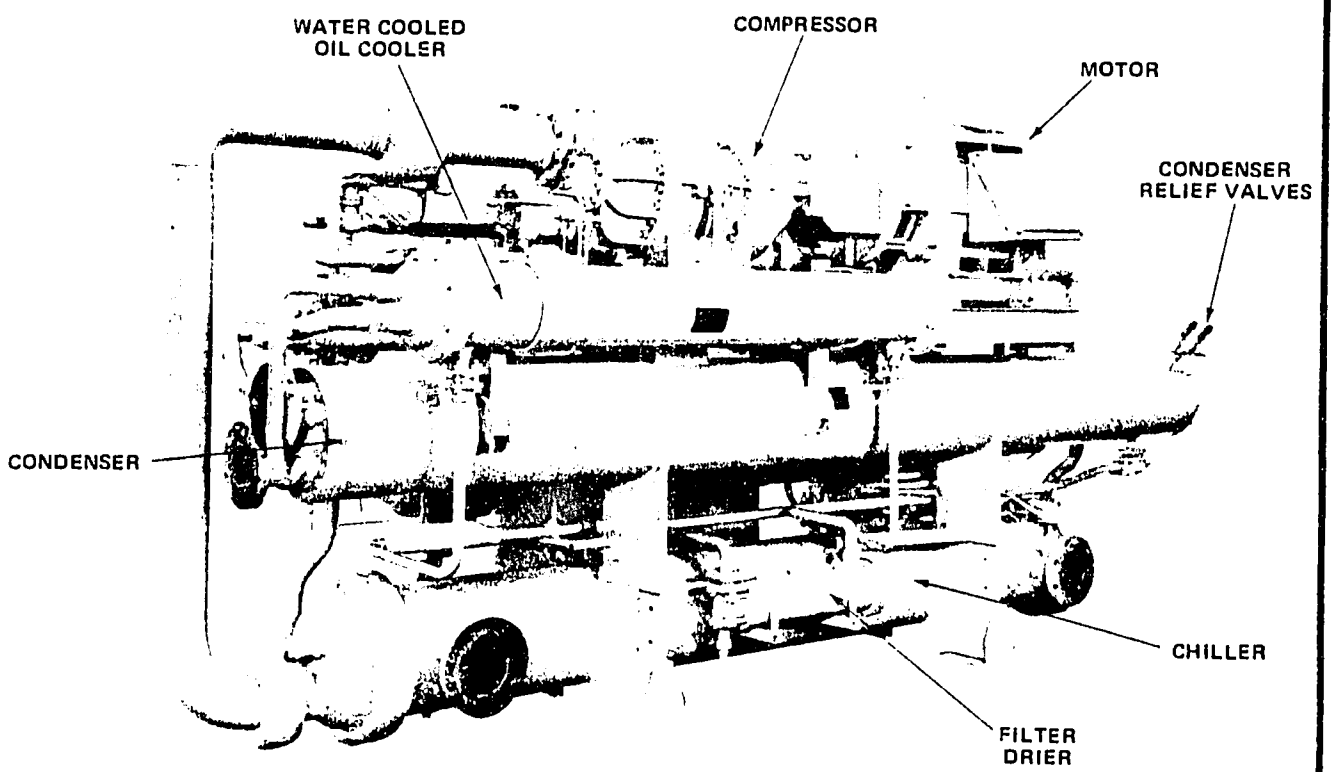

PCX-H HERMETIC PACKAGED CHILLER (DIRECT EXPANSION)

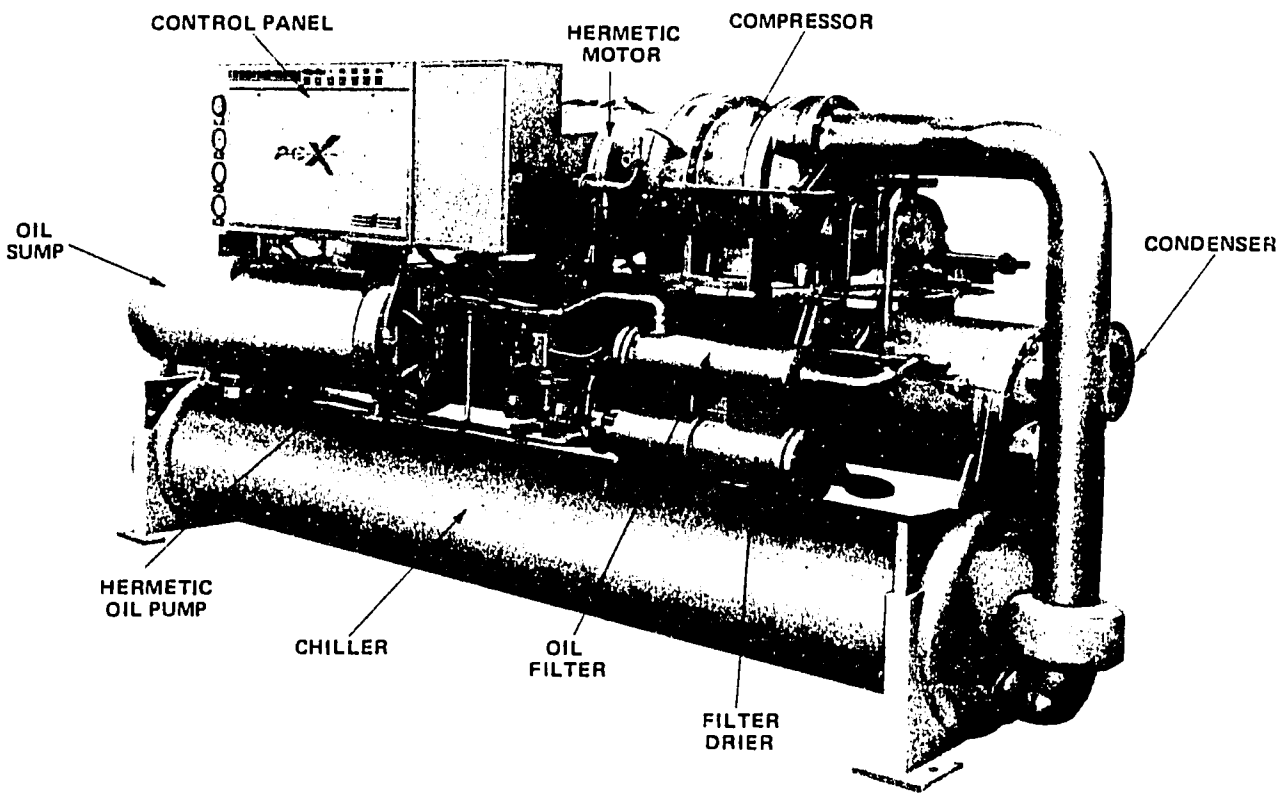

INDEX

TABLE OF CONTENTS

I. GENERAL INFORMATION PAGE

A. Shipping 1
B. Receiving Inspection 1
C. Rigging and Moving 1

II. INSTALLATION

A. Location 2
B. Mounting 2
C. Leveling 2
D. Unmounted Accessories 2
E. External Connections 2-4
F. Request for Start-Up Representative . . . 4

III. OPERATION

A. General 5
B. Systems 6
C. Component Operation 7-12
D. Optional Subsystem Operation 12-13
E. Typical Piping Schematics 13-16
F. Function of Electrical Controls 17-20
G. Typical Electrical Schematics 21-26

IV. MAINTENANCE PAGE

A. General 27
B. Periodic Maintenance 27-29
C. Maintenance Records 29-30
D. Oil Removal/Addition 31
E. Transferring/Evacuating/ Charging Refrig. 32-34
F. Component Maintenance 35-46
G. Optional Subsystem Maintenance 47
H. System Tests 48-51

V. TROUBLE SHOOTING

A. Trouble Shooting Chart 52-53

VI. APPENDIX

A. Daily Operating Log 54
B. Monthly Operating Log 55
C. Condenser Water Piping 56
D. Comp.Lubricating Requirements 57
E. Typical Information Labels 58-59

SERVICE PROCEDURES

NO.	PROCEDURE	PAGE
SP-1	*Oil Removal*	31
SP-2	*Oil Replenishment(Vacuum Method)*	31
SP-3	*Oil Replenishment(Pump Method)*	31
SP-4	*Relief Valve Access*	32
SP-5	*Service Valve Access*	32
SP-6	*Charging Valve Access*	32
SP-7	*Partial Pumpdown*	33
SP-8	*Liquid Refrig. Transfer*	33
SP-9	*Gas Refrig. Transfer from Chiller*	33
SP-10	*Liq. Refrig. Transfer from Condenser*	33
SP-11	*Gas Refrig. Transfer From Condenser*	33
SP-12	*Evacuation/Dehydration*	33
SP-13	*Initial Gas Refrig. Charging*	34
SP-14	*Liquid Refrig. Charging*	34
SP-15	*Adding to Refrig. Charge*	34
SP-16	*Compressor Coupling Alignment*	35
SP-17	*Oil Filter Replacement*	36
SP-18	*Coupling Alignment, Open Oil Pump*	37
SP-19	*Clearance Adjust., Open Oil Pump*	37
SP-20	*Maintenance, Hermetic Oil Pump*	37
SP-21	*Oil Pressure Relief Valve Adjust.*	38
SP-22	*Oil Pressure Relief Valve Assy.*	38
SP-23	*Replacement, Oil Sump Heaters*	38
SP-24	*Oil Cooler, Valve Adjustment*	40
SP-25	*Oil Cooler, Valve Flushing*	40
SP-26	*Seal Oil Cooler, Temp. Adjust.*	40
SP-27	*Condenser Cleaning, Mechanical*	41
SP-28	*Condenser Tube Plugging*	41
SP-29	*Filter Drier Replacement*	42
SP-30	*Superheat Adjustment*	43
SP-31	*Thermo-Expansion Valve Disassy.*	43
SP-32	*Disassy/Maintenance P.O.S. Valve*	44
SP-33	*Suction Filter Maintenance - In Line*	46
SP-34	*Suction Filter Maintenance - Head*	46
SP-35	*Hot Gas Bypass Adjustment*	47
SP-36	*Motor Insulation Resistance Test*	48
SP-37	*Refrigerant Leak Test*	49

DUNHAM-BUSH RESERVES THE RIGHT TO MAKE CHANGES IN SPECIFICATIONS AND DESIGN WITHOUT NOTICE.

REFERENCES *

TITLE	FORM NO.
PCX-H Hermetic Type Packaged Chillers 120 Thru 400 Tons	6039
PCX-O Open Type Packaged Chillers 120 Thru 350 Tons	6041
PCX-O Open Type Packaged Chillers 400 Thru 750 Tons	6041-2
PCX-OHR Open Type Heat Reclaim Packaged Chillers 85 Thru 330 Tons	6058
DBX Compressor Service Manual	6136
PCX Hermetic Packaged Chiller Templates	6239-1 Thru 6
PCX-O Open Type Packaged Chiller Templates	6241-1 Thru 8
Motor Starter Specifications	6236
Receiving Inspection Report	9214
Request for Authorized Start-Up Representative	9180
Daily Operating Log	9198
Monthly Operating Log	9198-1

*THESE FORMS ARE AVAILABLE AT THE LOCAL DUNHAM-BUSH SALES REPRESENTATIVE'S OFFICE.

INTRODUCTION

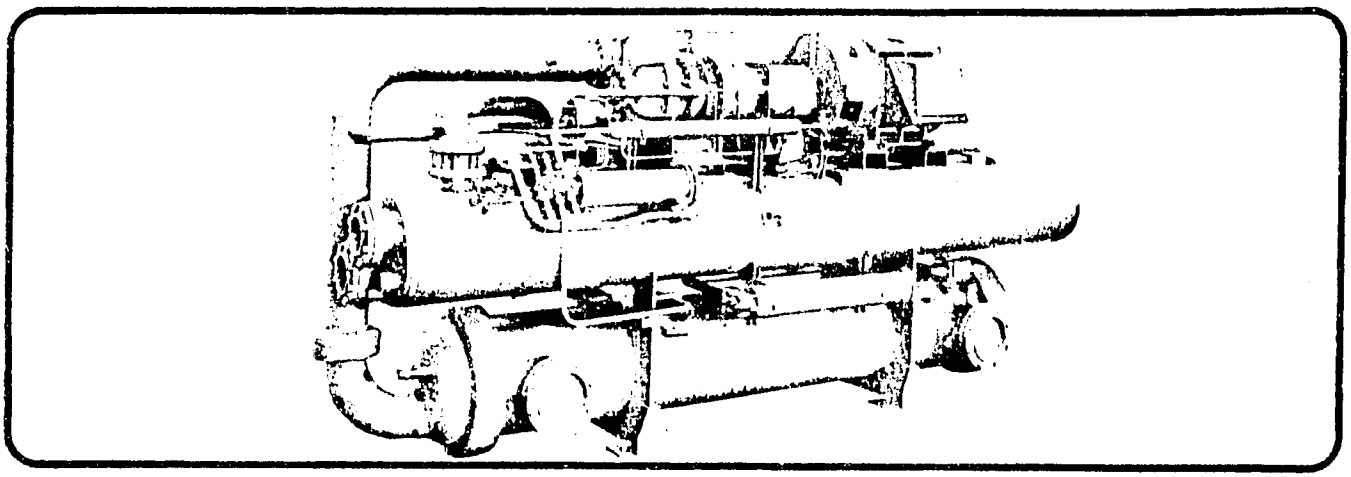

Each unit was designed to meet specific criteria and must be operated within conditions specified when ordered.

Fluorocarbon refrigerant must be handled with caution and release to the atmosphere should be minimized. Instructions for charging and retrieving refrigerant from these units can be found in the maintenance section of this manual.

These instructions and the drawings supplied with the PCX Unit must be followed carefully to insure proper installation, operation, and maintenance.

This manual is written and illustrated for a single PCX Unit installation. For instructions concerning a multiple unit installation, consult Dunham-Bush, Inc.

WARNING

Valves or connections which can cause loss of the factory installed refrigerant charge and lubricating oil charges shall not be opened under any conditions. The system shall not be dismantled or opened during installation except under the supervision of a Dunham-Bush, Inc., Authorized Service Representative.

The PCX Unit shall NOT be started following installation except under the direct supervision of a Dunham-Bush, Inc., Authorized Service Representative.

Warning tags attached to the unit should not be removed either prior to or after installation.

Compliance with the above is mandatory in order that the warranty shall not be jeopardized. All contacts with Dunham-Bush, Inc., regarding requests for information, service, or parts should be made to the nearest sales office.

DUNHAM-BUSH RESERVES THE RIGHT TO MAKE CHANGES IN SPECIFICATIONS AND DESIGN WITHOUT NOTICE.

I. GENERAL INFORMATION

A. SHIPPING

The unit is shipped with skids and lifting arms attached for ease in rigging. Refrigerant and oil systems are fully charged. Chiller and condenser water connections have covers to prevent contamination of the vessels. Check the unit nameplate to be sure the power supply meets the unit requirements. The wiring diagram number and type of refrigerant can also be found on the unit nameplate.

B. RECEIVING/INSPECTION

The unit should be inspected immediately, in the presence of the carrier's representative, for any evidence of damage during shipping. Any damage should be noted on the carrier's delivery receipt before it is signed. A damage claim should then be filed by the purchaser against the delivering carrier as all shipments are made at the purchaser's risk. The receiving inspection report (Form 9214), sent with the installation instructions, should also be filled out at this time and forwarded to the Dunham-Bush, Inc., National Service Department, West Hartford, CT. 06110.

C. RIGGING AND MOVING

Riggers and installers must use every precaution to prevent damage while moving the unit from the point of shipment to its permanent location. Pushing, pulling or climbing on any of the unit components or piping can easily create damage that will result in costly repairs of leaks and malfunctioning components. The only places it is safe to apply hoisting, jacking, pushing, or pulling forces are to shipping skids and lifting arms. Cables are to be attached only to the lifting arms, spreaders must be used with the lifting cables to prevent damage to the unit.

Skidding may be done directly on the shipping skids or on properly spaced rollers under the skids. Pushing and pulling should only be directed against the skids and lifting arms.

II. INSTALLATION

A. LOCATION

The location of the unit may be any foundation or deck that is generally level within 1/8 of an inch and structurally capable of supporting the weight of the unit. A cleared area should be left around the unit to aid in operation, maintenance and removal of components. See references (packaged chiller templates) to obtain minimum clearance requirements.

B. MOUNTING

Resilient pads are provided for installation under the mounting legs. For critical installations, Dunham-Bush, Inc., can provide whatever type of vibration isolator the customer specifies. They must be installed and adjusted in accordance with the isolator manufacturer's instructions. The unit may be cemented or lagged to the foundation if desired.

C. LEVELING

When the unit is at its final location, it should be jacked or hoisted, by the lifting arms, the shipping skids removed and the unit let down on the isolator equipment supplied (felt pads or vibration isolators). It should then be checked for level longitudinally at the top center of the condenser shell and laterally across the compressor motor feet. Steel shims should be installed under the isolator pads, if necessary to level the unit.

D. UNMOUNTED ACCESSORIES

A chiller flow switch, which is shipped in a separate container accompanying the unit, must be installed in the external chilled water outlet piping. It must be located in a horizontal section on the pipe where there is at least five (5) pipe diameters on both sides of the flow switch before any other connections, as indicated in Fig. 1. The flow switch paddle must be adjusted to the size of pipe in which the paddle is installed, and the switch set to trip at approximately 50% of the design flow. Consult the wiring diagram accompanying the unit for the electrical connections to interlock the flow switch with the control panel.

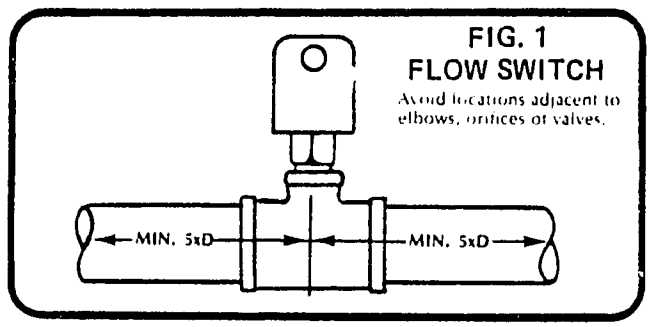

FIG. 1
FLOW SWITCH
Avoid locations adjacent to elbows, orifices or valves.

E. EXTERNAL CONNECTIONS

1. Water Connection

After the unit has been leveled, the external water piping to the chiller and condenser may be made up. Air vent valves should be installed at all high points to bleed the system of entrapped air. Drain valves or plugs should be installed at low points to gravity drain the system. The unit drain plugs for the chiller, condenser and oil cooler (if equipped) must be installed prior to filling the system. Insulation should be installed on all external piping to prevent sweating and if the chiller (vessel) and associated piping was not equipped with the optional factory insulation, it too must be insulated.

All external plumbing should have manual shut-off valves installed near the unit for ease in servicing and maintenance. Strainers should also be mounted in the piping before the unit to prevent dirt and other contaminants from entering and damaging the unit and its satellite equipment.

The external plumbing must be carefully located and adequately supported by pipe hangers to prevent twisting or bending stresses on the unit when the flanges or grooved pipe connections are bolted. It is recommended that flanged elbows be used at the connection to the condenser so that the external piping will not interfere with servicing of the condenser tubes. Flexible connections on water lines throughout the machinery room are recommended for chiller and condenser piping, where sound or vibration transmission may be a problem.

Following make up of the external plumbing, a check should be made for piping stresses at the PCX unit, as follows: Remove condenser and chiller connecting bolts. If any bolts are misaligned, adjust external piping or hangers to properly align the connections. If it is necessary to reshape and anneal the external piping, the inside of the piping must be cleaned of the resulting scale before reassembly. The piping should then be thoroughly flushed to remove all foreign material, connected to the unit, filled, vented and tested for leaks.

PCX units are designed for a fixed evaporator water flow, and means should be employed to assure a relatively constant flow at all loads.

II. INSTALLATION

E. EXTERNAL CONNECTIONS CONTINUED

2. Water Treatment

Most industrial water supplies contain dissolved or suspended materials which cause scale formation, corrosion, and propagate slime, algae, etc. It is strongly recommended that a water treatment specialist be consulted for additive systems to counteract or prevent the damages caused by these impurities.

Cooling towers and evaporative water coolers experience a constant loss of water due to evaporation. Since evaporation is a distillation process, an increasing concentration of suspended and dissolved impurities occurs. This increase of impurities can be greatly reduced by a bleed-off system which will constantly bleed off the contaminated water and replace it with fresh water through the sump float valve.

Chemical water treatment in addition to the bleed-off system will probably be necessary. The correct rate of water bleed-off and the proper chemical treatment should be determined by a specialist familiar with the local water characteristics. A daily check and periodic inspections should be made to be sure the correct bleed-off rate and chemical treatment is maintained. Do not underestimate the importance of daily logged readings of condensing pressure, water temperatures, oil cooler water (when supplied) and oil temperatures in determining the condition of the heat transfer surfaces, and the effectiveness of the water treatment.

NOTE: Consult manufacturer for information concerning design, installation and operation of the cooling tower or evaporative water cooler.

WARNING: Dunham-Bush, Inc., will not be liable for any damage or failure resulting from the physical or chemical properties of the condenser water used in this equipment.

NOTE: Local codes may require the relief valve piping piped away from the unit.

3. Electrical Connections

The unit is completely wired at the factory prior to delivery. The connections which must be made by the installer are listed below. Each circuit must have adequate control and protection devices incorporated in it in accordance with the National Electric Code and/or other applicable codes in the area in which the unit is installed. The voltage, frequency and phase must be in accordance with that shown on the unit nameplate, and within 1% voltage imbalance. Flexible conduit should be used where vibration may be a problem. All wiring must be in accordance with the wiring diagram furnished with the unit, the National Electrical Code and any local codes that may apply. Any deviations from the above requirements must have the prior approval of Dunham-Bush, Inc. Customer supplied starters for the compressor motor must be in compliance with the latest revision of Dunham-Bush, Inc., Engineering Specification No. ELC-ES-9 which is available from the local Dunham-Bush, Inc., sales representative's office under Form No. 6236 or as individually approved in writing by Dunham-Bush, Inc. A starter interconnection wiring diagram can be found in the Operation Section of this manual.

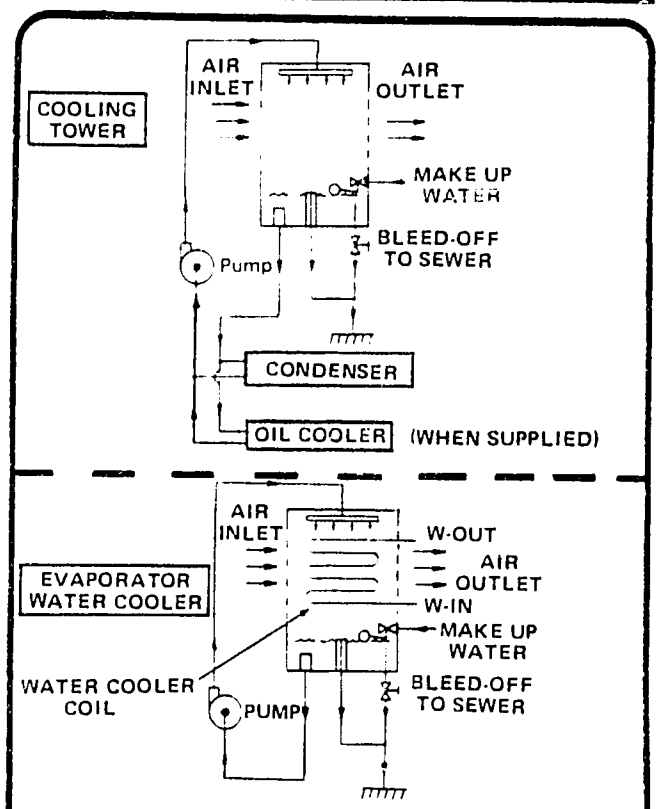

FIG. 2 TYPICAL BLEED-OFF SYSTEMS

The following external wiring is to be provided by the installer:

a. Power supply to compressor motor starter with circuit protection, and from starter to compressor motor.

b. Power supply to oil pump motor contactor or starter with circuit protection.

c. Chilled water pump auxiliary contacts to control panel.

d. Condenser water pump starter control circuit to control panel.

e. Compressor motor starter control circuit to control panel.

f. Compressor motor overload circuit to control panel.

g. Load limiter wiring from starter to control panel.

h. A properly sized control transformer or 120V/60 HZ./1PH power supply to control panel, with circuit protection.

i. Flow Switch to control panel.

4a. Mounting and Leveling

☐ Erected on foundation . . . in accordance with construction and electrical drawings supplied to the customer and requirements of this manual.

☐ Spring isolators or pads, installed, and the unit leveled . . . in accordance with isolator manufacturer's instructions and the requirements of this manual.

II. INSTALLATION

E. EXTERNAL CONNECTIONS CONTINUED

4b. Water Piping

- ☐ Condenser cooling water piping installed between condenser, pumps and cooling tower or well . . . as specified in this manual.
- ☐ Chilled water piping installed between chiller, pumps, and terminal equipment . . . as specified in this manual.
- ☐ Make-up and fill lines installed to cooling tower and chilled water system . . . and chemical treatment and bleed-off systems as needed.
- ☐ Thermometers,air vents, drain plugs and pressure gauges installed in chilled and condenser water inlet and outlet lines.
- ☐ Flow switch installed in outlet chilled water line and adjusted to a minimum of 50% flow.
- ☐ All water piping checked for strain . . . as specified in this manual.
- ☐ Water piping leak tested, flushed and vented, water strainers checked after flushing to be certain they are not clogged.
- ☐ Chiller and condenser water flow available from supply in sufficient quantity to meet unit design requirements. . . . and with adequate water treatment.

4c. Electrical Wiring

- ☐ Power supply available . . . with circuit protection and in accordance with the requirements on the unit nameplate and this manual.
- ☐ Wiring completed from power supply through circuit protection in accordance with the drawing supplied and the requirements of this manual.
- ☐ Wiring completed from power supply to circuit protection for oil pump motor in accordance with the wiring diagram and the requirements of this manual.
- ☐ Wiring completed from power supply through circuit protection to 115V control circuit in unit control panel (or through 115V transformer to control circuit) . . . in accordance with the drawing supplied and requirements of this manual.
- ☐ Wiring from power supply through circuit protection to satellite equipment and interlocks wired to control panel in accordance with drawing supplied and requirements of this manual.
- ☐ Phasing correct for direction of rotation of all motors except compressor and oil pump motors . . . phasing of compressor and oil pump motor will be checked by Dunham-Bush, Inc. start-up representative.

4d. Conditions Required for Start-Up

- ☐ Load must be available for operation and testing . . . a refrigeration load adequate to cause normal operation of the unit MUST BE AVAILABLE.
- ☐ Competent representatives of the Allied Trades (electrical contractor, steam fitters, controls contractor, etc.) involved in the installation of this chiller must be at job site to correlate their portion of the work in starting, testing, and balancing this chiller.

F. REQUEST FOR START-UP REPRESENTATIVE

After the installation has been completed and checked, Form 9180 must be filled out and sent to the National Service Department of Dunham-Bush, Inc. This Form is a request for the services of a Dunham-Bush, Inc. authorized start-up representative to perform the initial start-up of the Dunham-Bush chiller. The purchaser will have competent service, and operating personnel in attendance to assist in the work involved, and also to be trained in the service and maintenance of this chiller. (During the warranty period the manufacturer is responsible for parts only upon proof of defective workmanship or manufacture).

Following receipt of this signed form, a representative will be sent to the customer. He will inspect the installation to determine whether it meets Dunham-Bush, Inc. requirements, perform the initial start-up of the installation to determine whether it is in satisfactory operating condition, and instruct the specified customer personnel in its operation and maintenance for the length of time specified in the purchase contract.

NOTE:

Sump oil heaters should be energized a minimum of 24 hours prior to arrival of start-up representative. On hermetic compressors, the motor housing heaters should also be energized a minimum of 24 hours and the oil sump temperature must be at a minimum of 100°F (38°C) prior to arrival of start-up representative. This will insure that the oil is warm enough to vaporize any refrigerant in the oil and is in the normal operating temperature range.

III. OPERATION

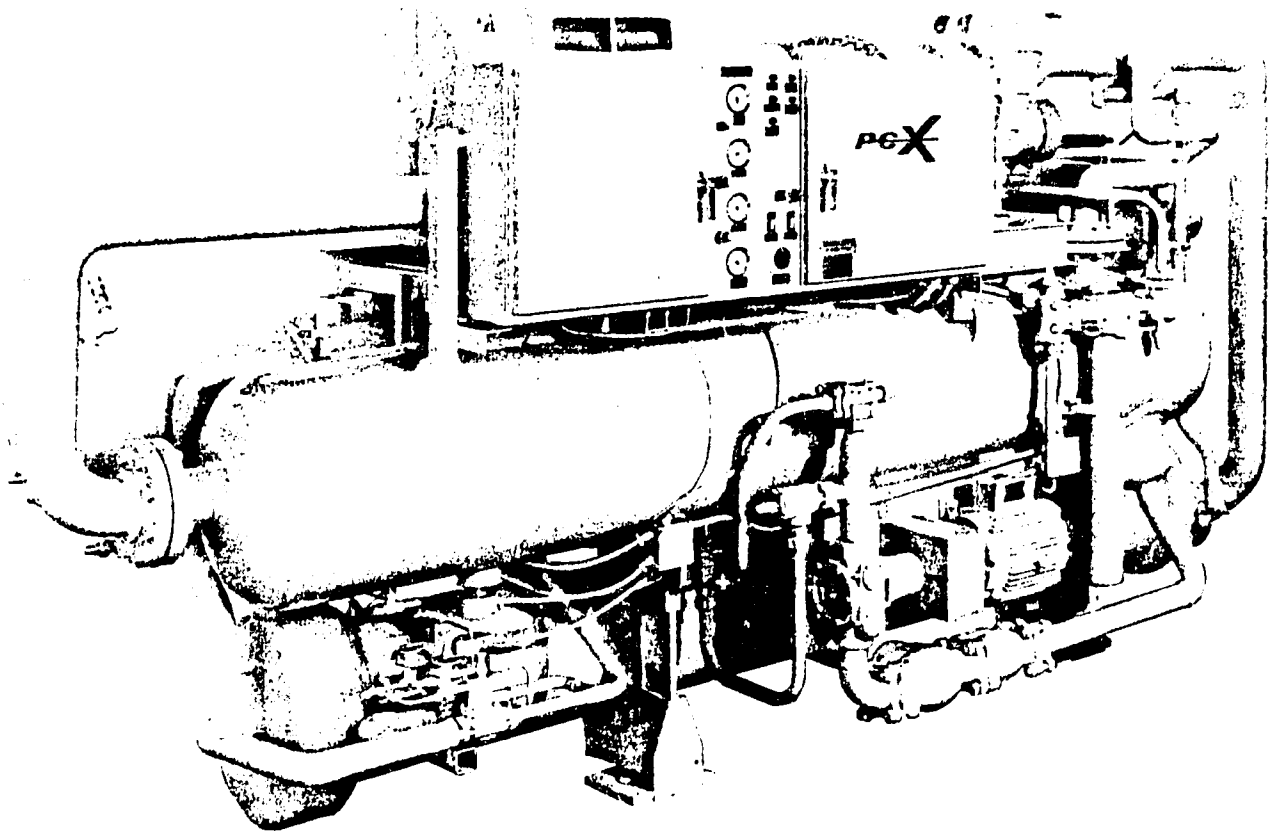

IPCX-O DIRECT DRIVE PACKAGED CHILLER

A. GENERAL

WARNING: The compressor and oil pump are NOT to be started initially except under the direct supervision of an Authorized Dunham-Bush, Inc. Start-Up Representative. Be sure that oil sump heaters and motor housing heaters (if the unit is hermetic) are turned on for a minimum of twenty-four hours prior to initial start-up. Couplings and motors have been aligned with the compressor at the factory. During shipment they may become misaligned. Alignment and motor pinning at initial start-up must be done by a Dunham-Bush, Inc. Start-Up Representative.

While this unit is greatly simplified and incorporates features to protect it against damage, it does represent a considerable investment and deserves the attention and care normally given to any fine piece of equipment. Reliable and economical operation will be achieved if the instructions in this manual are followed.

CAUTION: Operate this equipment in accordance with the instructions of this manual. DO NOT alter control settings to other than those specified on the wiring diagram accompanying the unit.

This equipment has been tested prior to shipment and found satisfactory for the conditions under which it was sold. Operation in excess of these conditions will subject this equipment to stresses for which it was not designed. Failure to heed this warning may result in injury to operating personnel and may jeopardize the warranty under which the equipment was sold.

III. OPERATION

B. SYSTEMS

1. REFRIGERANT SYSTEM

The PCX packaged chiller may have either a direct expansion or flooded chiller depending on the capacity of the unit. A simple flow diagram as depicted in Fig. 3 and 4 indicates the principle parts of a basic refrigeration

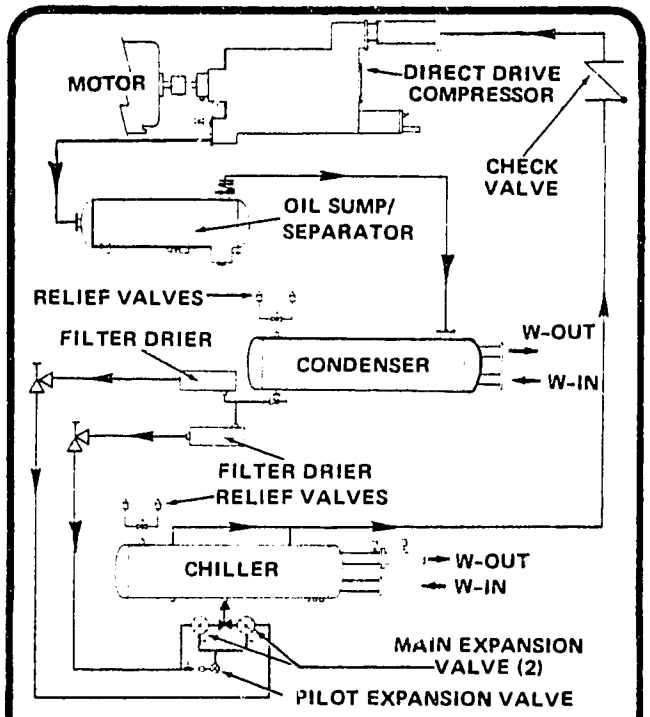

FIG. 3 TYPICAL FLOODED PCX-O

cycle. The compressor takes the refrigerant gas at low density and compresses it to a higher density. The temperature of the refrigerant gas is also increased. The dense refrigerant gas flows to the condenser where heat is removed, causing a change in the state of the refrigerant from a gas to a liquid. The refrigerant in a liquid state then flows through the filter/drier, through an expansion valve which meters the refrigerant into the evaporator chiller. There it changes its state back to a gas as it absorbs heat and evaporates. It is during this change of state that the refrigerant will extract heat from the medium being cooled. This low density cool gas then flows to the compressor where the cycle is repeated.

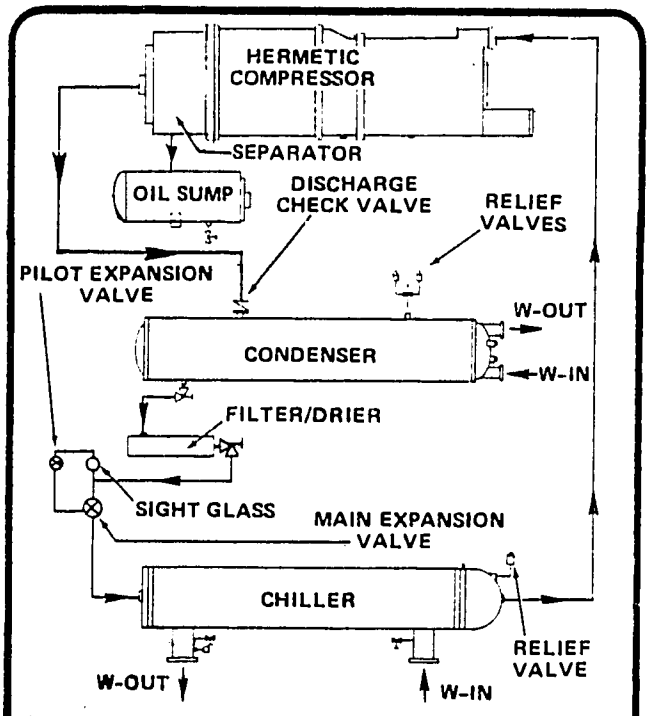

FIG. 4 TYPICAL DIRECT EXPANSION PCX-H

Operation of specific components within the refrigerant system may be found under System Components Section.

2. WATER SYSTEMS

The condenser water system on a PCX unit is an open end system and the water in the system is used to condense hot refrigerant gas into a liquid. Water is pumped through the tubes of the condenser where it picks up heat condensing the refrigerant. It then flows to a water tower, evaporative water cooler, or other cooling service, where the heat is dissipated to the atmosphere. Cooled water is picked up here and is pumped to the condenser to absorb more heat from the refrigerant.

Some units have water cooled oil coolers. The water used to cool the oil is either diverted from the input of the condenser to the oil cooler or is supplied from an exterior source. A thermally actuated valve monitors the leaving oil temperature and modulates the water flow through the cooler.

The condenser for heat recovery units is constructed with two entirely separate water circuits. Hot gas from the compressor is discharged to the condenser where the heat is absorbed by either one of the water circuits or both simultaneously, depending on the building requirements. The heat reclaim condenser features the split system to prevent contamination of the heating circuit, associated piping, and heating coils from the cooling tower water which may absorb dirt, chemicals or corrosives.

The chilled water system is a closed system and the flow pattern varies for a flooded system versus a direct expansion system. Both systems use shell and tube heat exchangers, but in a flooded system the water is pumped through the tubes while a direct expansion system, water is pumped through the shell. As the chilled water leaves from either of these systems it is monitored by electronic arrangement which controls the operation of the unit. The chilled water then flows to the cooling coils where it picks up heat from the space or item being cooled. The water is then circulated back to the pump and chiller.

Operation of specific components within the refrigerant system may be found under the Component Operation Section.

3. LUBRICATING SYSTEM

The oil in a PCX system is used to lubricate the compressor and is additionally used to dissipate heat generated within the compressor, provide a seal between the male and female rotors during compression of the refrigerant, as a hydraulic medium for capacity control, and to provide quite operation.

There are a number of variations of lubricating systems. The choice of each system is dependent upon the type of unit and its purpose. Operation of these systems can be found in the Component Operation Section.

III. OPERATION

C. COMPONENT OPERATION

1. COMPRESSOR/MOTOR ASSEMBLY

The PCX-H compressor motor is hermetically sealed and is directly connected at the compressor outlet so that both the compressed refrigerant and lubricating oil cool the motor windings. Temperature sensors are embedded in the motor windings to monitor the temperature for the motor protection system. The PCX-O compressor motor is air cooled and is connected to the compressor by a flexible coupling.

The compressor used on the Dunham-Bush, Inc., packaged chiller is a positive displacement, helical-axial flow compressor designed for use with high pressure refrigerants. Unlike centrifugal compressors, no purge system is needed.

For clarity reasons, the following account of the PCX compressor operation will be limited to one lobe on the male rotor and one interlobe space of the female rotor. In actual operation, as the rotors revolve, all of the male lobes and female interlobe spaces interact similarly with resulting uniform, non-pulsating gas flow.

1a. Suction Phase

As a lobe of the male rotor begins to unmesh from an interlobe space in the female rotor, a void is created and gas is drawn in through the inlet port - Fig. 5 - as the rotors continue to turn the interlobe space increases in size - Fig. 6 - and gas flows continuously

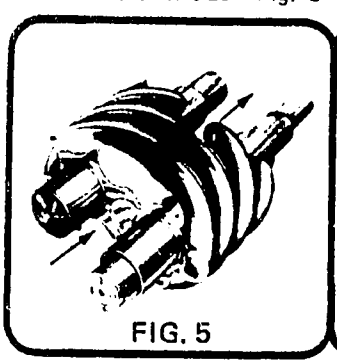

FIG. 5

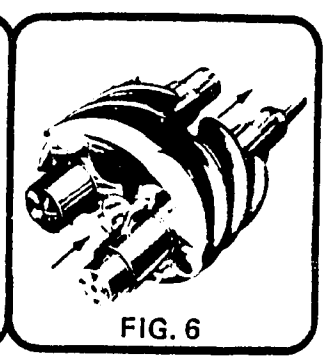

FIG. 6

into the compressor. Just prior to the point at which the interlobe space leaves the inlet port, the entire length of the interlobe space is completely filled with drawn in gas - Fig. 7.

1b. Compression Phase

As rotation continues, the gas in the interlobe space is carried circumferentially around the compressor housing. Further rotation meshes a male lobe with the interlobe space on the suction end and squeezes (compresses) the gas in the direction of the discharge port. Thus the occupied volume of the trapped gas within

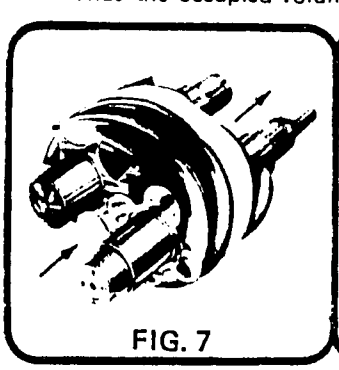

FIG. 7

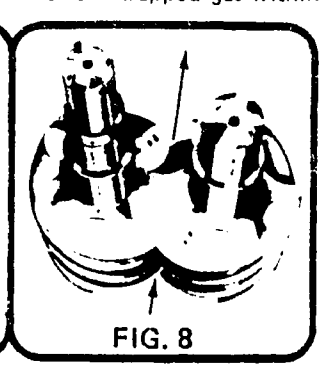

FIG. 8

the interlobe space is decreased and the gas pressure consequently increased.

1c. Discharge Phase

At a point determined by the designed "built-in" compressor ratio, the discharge port is uncovered and the compressed gas is discharged by further meshing of the lobe and interlobe space - Fig. 8. While the meshing point of a pair of lobes is moving axially, the next charge is being drawn into the unmeshed portion and the working phases of the compressor cycle are repeated.

1d. Capacity Control

Compressor vapor displacement is controlled to balance the flow rate of liquid refrigerant entering the evaporator with the changing cooling demand.

The capacity control valve is located in the rotor housing as shown in Fig. 9 and 10. The movement

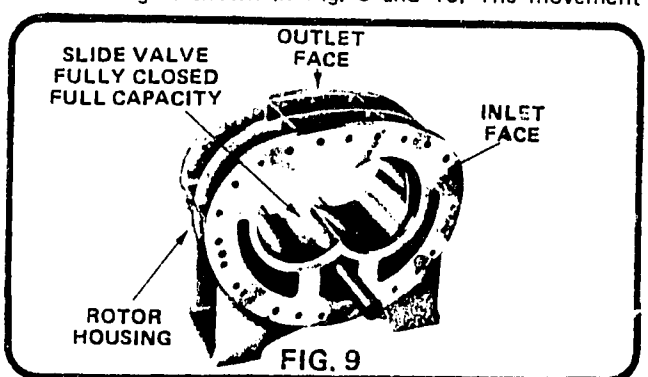

FIG. 9

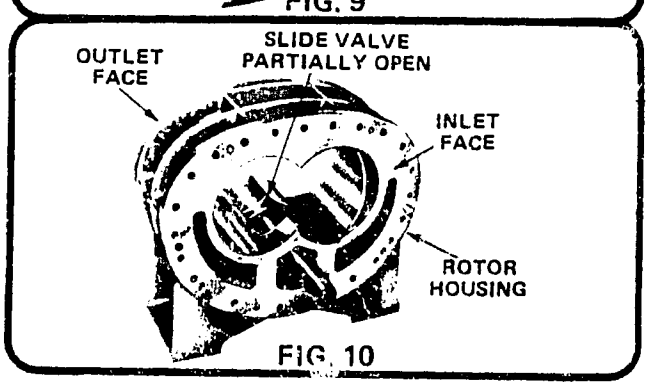

FIG. 10

of this valve along the axes of the rotors is programmed by a solid state, temperature initiated, hydraulically actuated control arrangement. When the compressor is fully loaded the slide valve is in the closed position against the valve stop as shown in Fig. 9, and all gas flows through the rotor housing as described previously. When the compressor starts to unload, as shown in Fig. 10, the compressor slide valve will move away from the valve stop. The movement of the slide valve creates an opening in the bottom of the rotor housing through which suction gas can pass back to the inlet port. As no significant amount of work has been done on the returned suction gas, no appreciable losses have been incurred. Reduced capacity is obtained from the gas remaining in the interlobe, which is compressed in the ordinary manner. In principle, as the opening in the rotor housing is enlarged the compressor displacement is reduced. Optional capacity control system information can be found under Optional Sub-System Operation.

C. COMPONENT OPERATION CONTINUED

CAPACITY CONTROL

1e. The temperature load controller (TLC) supplies power to the load solenoid valve (LSV) and unload solenoid valve (USV) to control the position of the compressor slide valve piston. Control is achieved electronically by a monitoring leaving chilled water temperature. The TLC will always act to meet a specific load demand and stabilize unit operation.

LEGEND: LTV - Load Throttling Valve; UTV - Unload Throttling Valve; SOV - Shut Off Valve; FUSV - Fast Unload Solenoid Valve; USV - Unload Solenoid Valve; LSV - Load Solenoid Valve; ▨ Refrigerant Gas; ☐ Refrigerant Oil

COMPRESSOR LOADING

- **LOADING**
  When energized, the load solenoid valve (LSV) opens and discharge pressure pushes the slide valve towards load, forcing oil out of the cylinder into the suction housing. Piston speed is controlled by an adjustable restrictor valve located in the oil line.

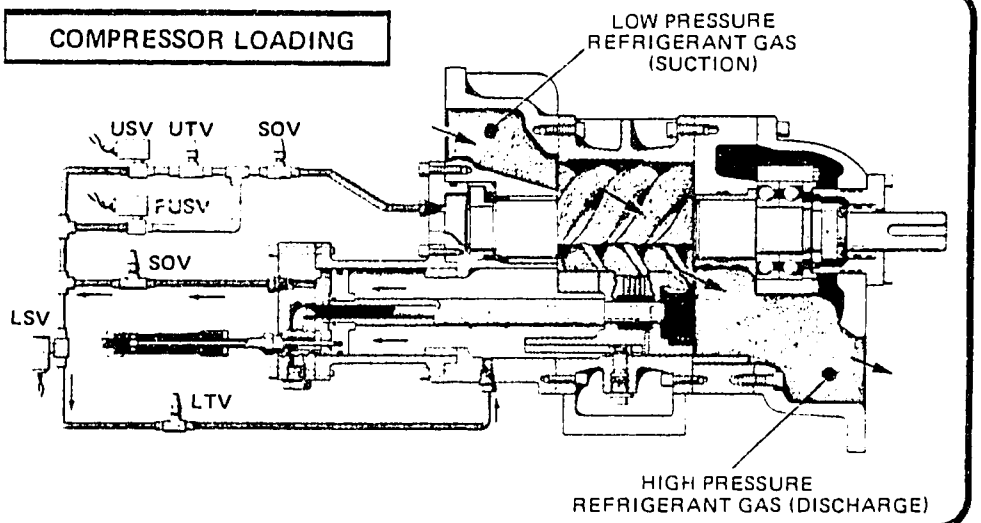

COMPRESSOR UNLOADING

- **UNLOADING**
  When energized, the unload solenoid valve (USV) opens. The combination of discharge plus oil pressure on the slide valve piston will move the slide valve toward the unload position. Piston speed is controlled by an adjustable restrictor valve located in the oil line.

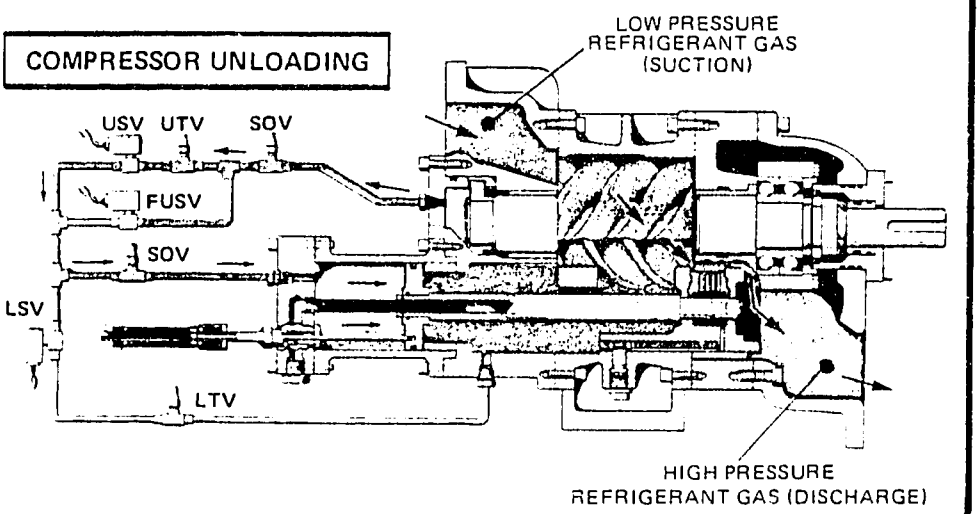

COMPRESSOR PART LOAD

- **PART LOAD**
  The unit will remain in the part load position as long as the leaving chilled water temperature remains at the desired temperature. Both load and unload solenoid valves will be closed and the piston will be stationary at the part load position.

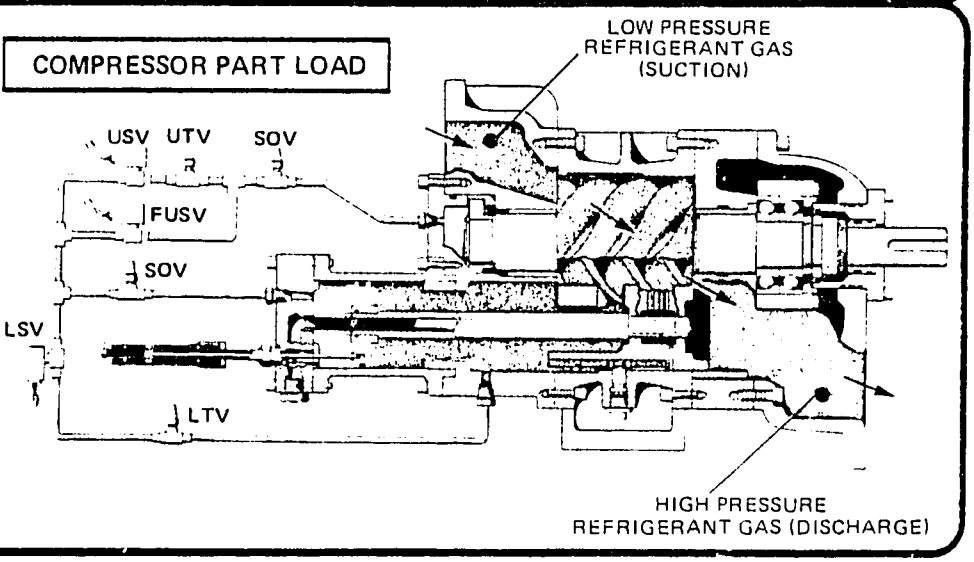

2. LUBRICATION SYSTEM OPERATION

2a. Oil Separation and Collection

Prior to entering the condenser, the discharge refrigerant vapor and the oil are mechanically separated. The oil/vapor mixture is discharged from the compressor to a separator, or combination sump/separator (depending upon the unit model). A liquid injection arrangement controlling discharge temperature at the compressor insures the proper conditions necessary for efficient oil separation.

- **Hermetic Units** - Units featuring a hermetic compressor have an oil separator mounted at the compressor discharge and the oil drains into a separate sump. The separator is constructed with a knitted mesh wire wound on a perforated metal mandrel. The oil droplets collect on the wire mesh and are drained into the oil sump. The discharge refrigerant vapor is piped from the separator directly to the condenser.
- **Open Drive Units** - Units featuring a direct drive compressor incorporate a combination oil/sump separator in a single vessel. The upper portion of the shell contains mesh beds which serve to remove the oil from the discharge vapor. The bottom portion of the shell acts as a sump for the collected oil. The discharge refrigerant vapor is piped from the upper portion of the sump/separator to the condenser.
- **Oil Sump Heaters** - Electric resistance heaters are located in the lower portion of the sump vessel and serve to vaporize excess refrigerant that may have diluted the oil during shut-down, and heat the oil to a suitable temperature for start-up. Normally the heaters must be energized a minimum of 24 hours and the oil sump temperature must be at a minimum of 100°F (38°C) prior to start-up of the unit.
- **Oil Sump Sight Glasses** - Sight glasses are provided in the sump vessel to monitor the oil level. When the unit is shut-down and the oil is at design discharge temperature, the normal oil level is 1/2 to 1/3 visible in the (top) sight glass.

2b. Oil Pumps

A gear type oil pump is used to provide oil at sufficient pressure to lubricate the compressor and actuate the capacity control slide valve. The pump may be either hermetic or open drive, depending on the unit application.

- **Hermetic Oil Pump** - The hermetic oil pump and motor are located within the oil sump vessel utilizing the oil to cool the motor windings. Thermal switches imbedded in the motor windings are interlocked with the control panel and serve to protect the motor from overheating. To avoid circulation of solid contaminants, a 100 mesh strainer is located at the pump suction. A pressure relief valve located on the discharge side of the pump inside the vessel, is factory set and sealed for 53 psid (365 kPa) relief pressure.
- **Open Drive Oil Pump** - Located exterior of the oil sump, the open pump is coupled to a motor. To avoid circulation of solid contaminants, a 100 mesh strainer is located at the pump suction. Service valves and a check valve are provided for ease of maintenance.

2c. Oil Systems

There are two basic types of oil system piping arrangements used on packaged chillers that serve the compressor's lubrication and hydraulic purposes; a partially pumped system and a fully pumped system. Typical lubrication systems are shown in Fig. 11 thru 13.

NOTE: Net oil pressure is the oil pressure supplied to the bearings minus the discharge pressure at the compressor.

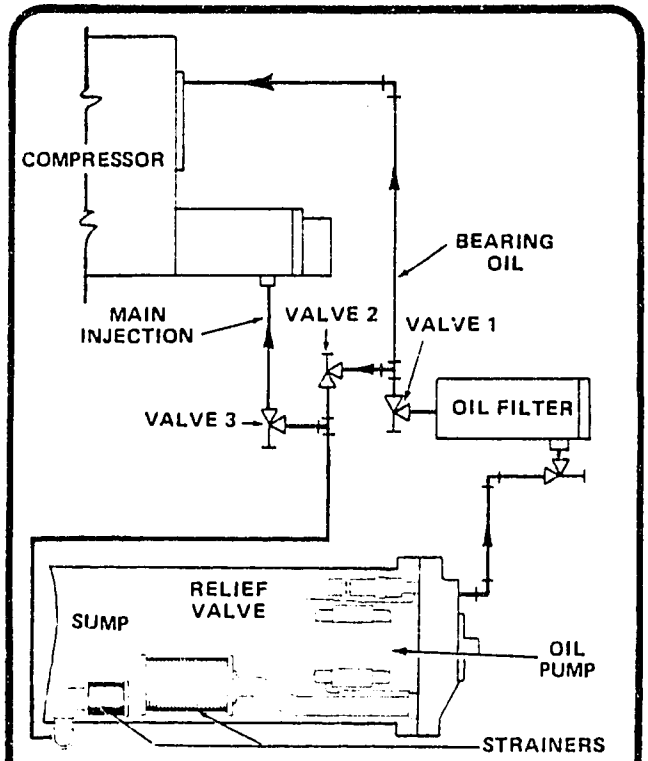

FIG. 11 - PARTIALLY PUMPED WITH HERMETIC OIL PUMP

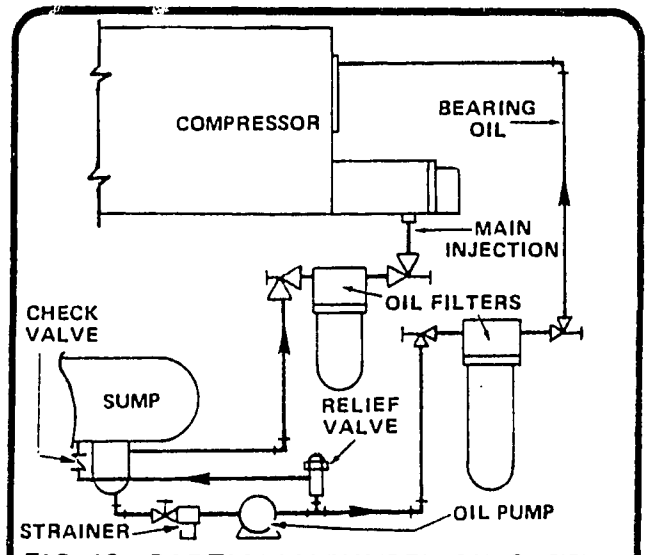

FIG. 12 - PARTIALLY PUMPED OIL SYSTEM WITH OPEN OIL PUMP

- **Partially Pumped Oil System** - In a partially pumped lubrication system, strained oil is pumped through an oil filter to a three valve manifold. Valve 'one' and valve 'three' as shown in Fig. 11 are strictly service valves and remain fully open. Valve #2 is used to adjust the required net oil pressure.

- **Fully Pumped Oil System** - Both injection and bearing oil are pumped in the fully pumped oil system. Net oil pressure is maintained by a regulating valve mounted at the oil pump discharge. The regulating valve may be adjusted to obtain the required net oil pressure.

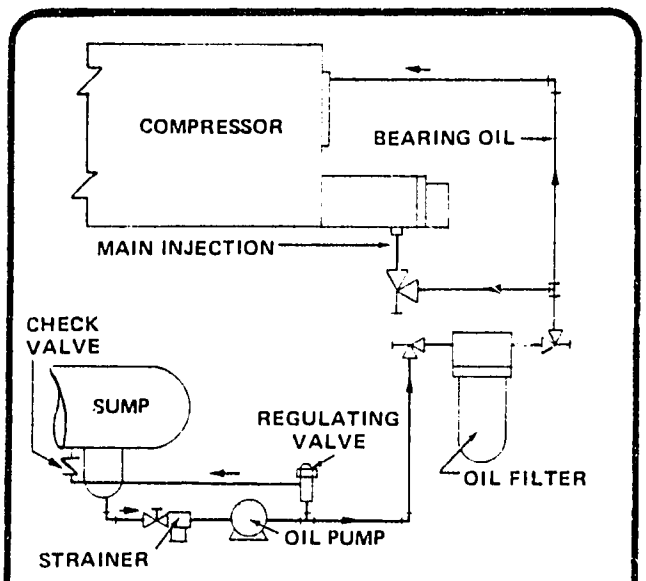

FIG. 13 FULLY PUMPED OIL SYSTEM

2d. Oil Filters

The filters used in the oil system consist of a shell with replaceable 10 micron pleated paper element(s). The normal operating pressure drop across the filter is 1 thru 2 PSID (6.9 thru 13.8 kPa) with a new element. The maximum allowable pressure drop across the filter is 6 PSID (41.4 kPa). Service valves are provided for easy maintenance.

2e. Evaporator Oil Return System (Flooded Chiller, Low Temperature Direct Expansion Chiller)

Powered by discharge gas, a jet pump eductor is used to remove residual oil that accumulates in the chiller. This device is used on all flooded chillers, and direct expansion chillers with low suction temperature applications.

- **Flooded Chiller** - The flooded chiller has 4 to 5 valve taps in the chiller shell which are connected to the suction of the jet pump. The bottom tap should be opened partially for pulldown and overload conditions, when the liquid level is depressed. For high chiller liquid levels, when the load is low, the top tap, generally, should be closed unless field conditions require otherwise. The remaining valve taps permit oil pick-up as the level varies. These taps should be open somewhat, and the one that is closest to the normal liquid level, when operating at the design condenser leaving water temperature, should be wide open.

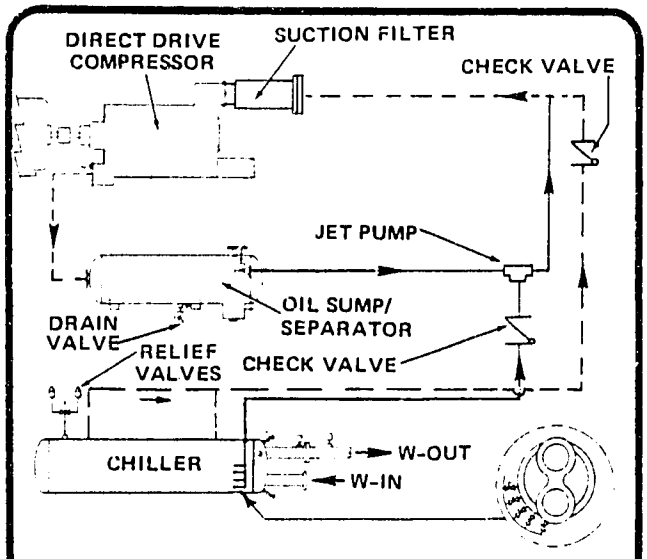

FIG. 14 JET PUMP (FLOODED CHILLER)

NOTE: Avoid having valves wide open that draw only gas from the chiller.

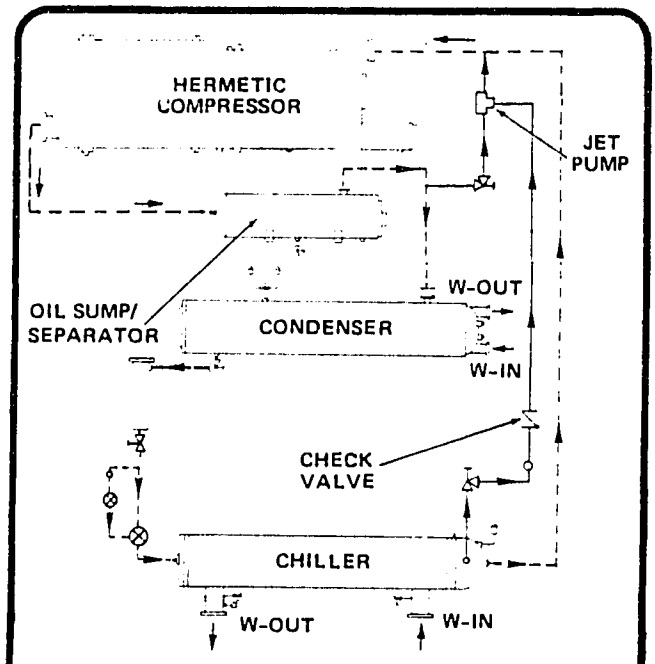

FIG. 15 JET PUMP DIRECT EXPANSION

- **Direct Expansion Chiller** - The direct expansion chiller has one valve tap in the chiller suction head which is connected to the suction of the jet pump. Both the valve at the chiller head and the valve at the jet pump remain fully open.

3. OIL COOLING SYSTEM OPERATION

Liquid injection or a water cooled oil cooler is supplied for oil cooling.

3a. Liquid Injection

Liquid injection is used to cool the oil and refrigerant vapor, and is controlled within the compressor during

compression to insure efficient oil separation, minimize refrigerant solubility in the oil, and maximize lubrication properties. By controlling oil temperature on hermetic units, the liquid injection system, additionally, facilitates the dissipation of heat from the motor windings.

- **Normal Operation** - This system is designed to hold the oil temperature above 135°F (57.2°C) to minimize excessive oil dilution. This is accomplished by a thermostat sensing discharge temperature. The liquid injection solenoid will de-energize when the discharge temperature reaches the design cut-out

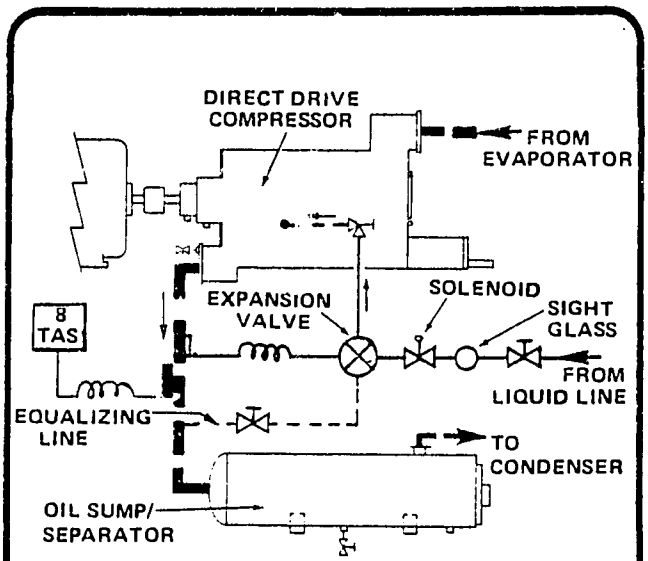

FIG. 16 LIQUID INJECTION

setting for the thermostat, as noted on the unit wiring diagram accompanying the unit. The solenoid will cycle to maintain 140°F ± 5°F (60°C) oil temperature, minimizing dissolved refrigerant in the oil.

To insure proper oil separation by maintaining discharge superheat under all load conditions, the thermo-expansion valve is factory pre-set to maintain a minimum 40° thru 50F° (22.2° thru 27.8C°) discharge superheat at 100% load. On any given unit, the controls should be set to maintain a minimum of 35F° (19.4C°) superheat at any load.

- **Heat Reclaim/R-12 Units** - The liquid injection assembly for heat reclaim and R-12 units operate in the same manner except that the liquid injection throttling device is a temperature operated valve that will react to discharge temperature only rather than discharge superheat.

3b. Seal Oil Cooling (Open Drive Units)

Seal oil cooling is provided to control the viscosity and temperature of the oil supplied to the shaft seal cavity under all operating conditions. The temperature of the oil entering the seal cavity is maintained at 115°F ± 5°F (46°C ± 2.8°C). The major components of the seal oil cooling system consist of a liquid line solenoid, a temperature operated expansion valve, a direct expansion heat exchanger and a safety thermostat. A check valve is provided upstream of the seal cavity to maintain a full oil level in the cavity, preventing refrigerant leakage through the seal during shut-down.

- **Normal Operation** - The seal oil cooler liquid line solenoid energizes on start-up allowing liquid refrigerant to enter the heat exchanger. The safety thermostat is electrically bypassed during start-up by a timer until conditions stabilize for normal operation. The expansion valve modulates refrigerant flow entering the heat exchanger by responding quickly to temperature changes in the oil entering the seal cavity.

3c. Water Cooled Oil Coolers (Low Temperature or Special Applications)

Constructed with an externally finned tube bundle mounted in a steel shell, the heat exchanger provides the required oil cooling capacity under all operating conditions. A thermostatically actuated two way valve regulates the water flow through the tubes, as the sensing element monitors the leaving oil temperature. The baffle arrangement in the shell side channels the oil flow for a more effective heat transfer.

4. HIGH/LOW SIDE COMPONENT OPERATION

4a. Discharge Check Valve

To prevent migration of liquid refrigerant from the condenser into the separator during shutdown, a discharge check valve is used. Located between the separator and condenser, the check valve also prevents excessive spin-down of the compressor, and allows the unit to be pumped down for servicing.

4b. Condenser

The condenser is a 'shell and tube' heat exchanger which serves to condense the discharge refrigerant vapor by removing heat. Water is circulated through the tubes absorbing heat from the discharge vapor condensing in the shell side of the externally finned copper tube bundle. The water flow rate or temper-

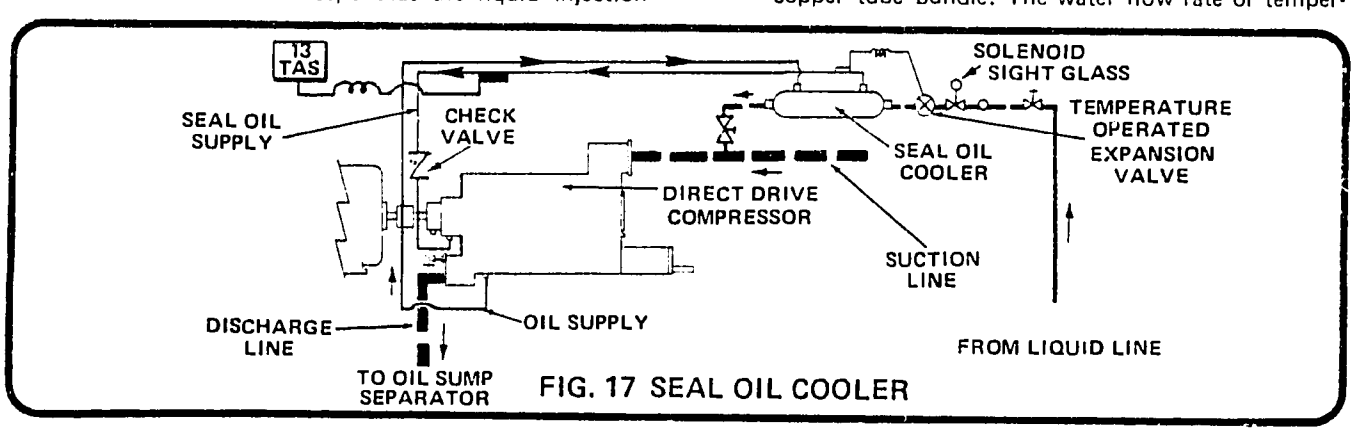

FIG. 17 SEAL OIL COOLER

C. COMPONENT OPERATION CONTINUED

ature will have a significant effect on refrigerant condensing pressures under all operating conditions.

Dual refrigerant relief valves are mounted on the condenser vessel serving as a protection device.

- **Heat Reclaim Condenser** - As heat reclaim applications are specialized, the most economical operation must be evaluated for each job. Generally, when the heat reclaim water circuit is operating, the condensing pressure elevates because of a high entering water temperature, resulting in a higher kilowatt draw. When or if the tower water should operate during the heat reclaim cycle depends upon the heating and cooling load characteristics, and the percentage of heat rejected for heat reclaim.

4c. Filter Drier

The filter/drier is composed of a strainer and replaceable dessicant cartridges which remove contaminants, acid, and moisture from the refrigerant. A shut-off valve is at the outlet end of the filter/drier.

4d. Throttling

Throttling liquid refrigerant serves to regulate the refrigerant flow into the chiller while maintaining the required evaporating temperature. Throttling is accomplished by a multiple valve arrangement. The pilot thermo valve is mounted in a branch liquid line and is used in conjunction with the pilot operated solenoid (P.O.S.) thermal expansion valve which is located in the main liquid line.

- **Pilot Thermo Valve** - The pilot thermo valve meters a branch refrigerant liquid line while sensing either leaving water temperature or suction temperature, and serves to supply a pilot signal to the P.O.S. valve.

- **Pilot Operated Solenoid Valve** - The P.O.S. valve positions according to the signal pilot supplied from the pilot thermo valve. During shutdown the solenoid valve closes the pilot line allowing the valve to close. A manual opening stem is provided for service purposes and must be fully counterclockwise for normal operation.

4e. Chillers

Designed for a fixed flow rate, the "shell and tube" heat exchanger transfers heat from the medium being cooled to the refrigerant, causing the refrigerant to vaporize. The two types of chillers are flooded and direct expansion. Both types have pressure taps at the water inlet and outlet connections, a bulbwell for the water freeze-up thermostat, and a temperature load control sensor.

- **Flooded** - Flooded chillers have liquid refrigerant flooding the lower portion of the shell with the medium being cooled flowing through the tubes. The tubes are externally finned so that the refrigerant will have a large surface area to extract heat from the medium being cooled. Also supplied on the flooded chiller is a dual relief valve to serve as a protection device.

- **Direct Expansion** - The refrigerant enters the chiller through a distributor where it is directed into the tubes (the evaporating refrigerant is at a rate depending upon the cooling load). The tubes are of the patented Inner-Fin® extended surface design which improves heat transfer while minimizing refrigerant pressure drop, permitting a compact and efficient chiller design. The refrigerant vapor passes through an effective filter built into the suction head of the chiller (for additional system protection). The chiller is provided with a single relief valve to protect it from refrigerant over pressure.

4f. Suction Check Valve

Located in the piping between the compressor and the chiller, they are used to prevent excessive "spin-down", equalization of pressure between the compressor and chiller, and to prevent migration of oil into the chiller.

4g. Suction Filter

- **Flooded Units** - Units with a flooded chiller have a 10 micron suction filter mounted on the compressor at the compressor inlet.

- **Direct Expansion Units** - Units with a direct expansion chiller have a dacron felt filter located in the suction head of the chiller.

D. OPTIONAL SUB-SYSTEM OPERATION

1. XTRATHERM VAPOR INJECTION SYSTEM

The vapor injection system is used to provide additional subcooling to the liquid refrigerant supplied to the evaporator for increased refrigeration effect and system capacity. Its main components are a subcooler, subcooler thermo-expansion valve, evaporator pressure regulator, check valve, solenoid valve, vapor injection filter, oil feed valve, dual feed lines to the pilot valve of the main thermo-expansion valve and a minimum load limit switch.

A reed switch is located on the slide valve indicator at approximately 65% of full load. It may be adjusted between 40% and 75% to suit job conditions. The switch is used to control the solenoid which shuts down the vapor injection system on the off cycle or whenever the system becomes ineffective. When the capacity of the compressor reaches the load at which the reed switch is set, the solenoid will open and a small portion of the liquid refrigerant is diverted through the expansion valve to the subcooler. This refrigerant evaporates and in the process absorbs some of the heat of the liquid refrigerant flowing through the subcooler to the evaporator. The evaporator pressure regulator is used to control the pressure leaving the subcooler, which keeps the subcooling liquid temperature relatively constant.

2. HOT GAS BYPASS – UNLOADED START

Hot gas bypass unloaded start is accomplished by diverting gas from the compressor discharge port through a solenoid valve to the compressor suction port. The bypass line is open at start-up and the solenoid valve is used to close it. The purpose for unloading is that the compressor is designed to start under a low load (torque) condition, such as when the low

D. OPTIONAL SUB-SYSTEM OPERATION CONT.

side and high side pressures are equal (balance). The equal pressures allow the compressor and motor to reach operating RPM before the solenoid closes and compression starts. The motor therefore draws fewer inrush amps. In the case of open compressor units, unloaded start may allow use of a smaller horsepower motor.

3. HOT GAS BYPASS CAPACITY CONTROL

Hot gas bypass capacity control is used to feed hot gas directly into the chiller when the compressor's load falls to 10% or less. When this occurs, a solenoid valve in the capacity control line is energized by a reed switch in the slide valve indicator. The introduction of hot gas provides a stable refrigerant flow and keeps the machine from short cycling under low load conditions.

4. REED SWITCH

The reed switching assembly is used in conjunction with a flip-pac relay which controls various system components at different percent slide valve positions. Adjustments may be required upon installation to balance the unit performance with load characteristics.

- **High/Low Limit Switches** - These serve to limit slide valve positioning from extending beyond the range of application. The low limit switch is adjusted correctly when the differential temperature across the chiller is 1F° to 2F° (.56C° to 1.12C°). The high limit switch is factory set and should be adjusted only by an Authorized Dunham-Bush serviceman.
- **Hot Gas Capacity Control Limit Switch** - (If applicable) is used in conjunction with the low limit switch.
- **Large TX Valve Limit Switch** - (If applicable) Refer to the specific unit wiring diagram for correct positioning.

For any additional information, refer to the specific unit wiring diagram or to Dunham-Bush Service Bulletin No. SR109A.

E. TYPICAL PIPING SCHEMATICS

The piping schematics which appear on the next three pages are typical only. These schematics depict control systems and refrigerant and oil flow through the unit to furnish you with an understanding of the screw compressor packaged chiller.

Shown below are the symbols, codes and items with their descriptions which appear on the piping schematic.

TEMPERATURE AND PRESSURE CONTROL

CODE	DESCRIPTION
2TAS	Freeze Up Thermostat
7TAS	Low Refrigerant Temp. Thermostat
8TAS	Low Discharge Temp. Thermostat
12TAS	Oil Temperature Thermostat
13TAS	Seal Oil Temperature Thermostat
1PS	Hi-Low Refrigerant Pressure Safety Sw.
2PS	Low Refrigerant Pressure Unload Sw.
3PS	Low Oil Pressure Safety Sw.

PIPING SYMBOLS

SYMBOL	DESCRIPTION	SYMBOL	DESCRIPTION
	Refrigerant		Hand Valve
	Refrigerant & Oil		Hand Angle Valve
	Oil		Solenoid Valve
	Control		Check Valve
	Remote Bulb Capiliary Tubing		Sight Glass
	Unloaded Start		Expansion Valve
	Hot Gas Bypass		Pilot Expansion Valve
	Relief Valve		

COMPONENTS

ITEM	DESCRIPTION	ITEM	DESCRIPTION
1	Refrigerant Relief Valve, Chiller	17	Compressor Oil Pressure Balancing Valve
2	Refrigerant Relief Valve, Condenser	18	Refrigerant Expansion Valve
3	Liquid Injection Angle Valve	19	Refrigerant Pilot Expansion Valve
4	Oil Pressure Relief Valve	20	Liquid Injection Expansion Valve
5	Water Temperature Bulbwell	21	Seal Oil Expansion Valve
6	Unloader Solenoid Valve Assembly	22	Unloaded Start Solenoid Valve
7	Oil Injection Angle Valve	23	Hot Gas Bypass Solenoid valve
8	Seal Oil Solenoid Valve	24	Suction Check Valve
9	Load Control Temperature Sensor	25	Oil Filter
10	Water Flow Switch	26	Oil Strainer
11	Liquid Injection Solenoid Valve	27	External Oil Pump
12	Sump Oil Drain	28	Oil Return Check Valve
13	Sump Oil Heater	29	Jet Pump
14	Chiller Freeze Up Bulbwell	30	Jet Pump Check Valve
15	Discharge Refrigerant Check Valve	31	Suction Filter
16	Unloader Throttling Valve		

III. OPERATION

E. TYPICAL PIPING SCHEMATICS CONTINUED

NOTE: DO NOT use this piping diagram to troubleshoot your unit. It is typical only and may not reflect the components provided on your unit.

TYPICAL PIPING SCHEMATIC (PCX180H)

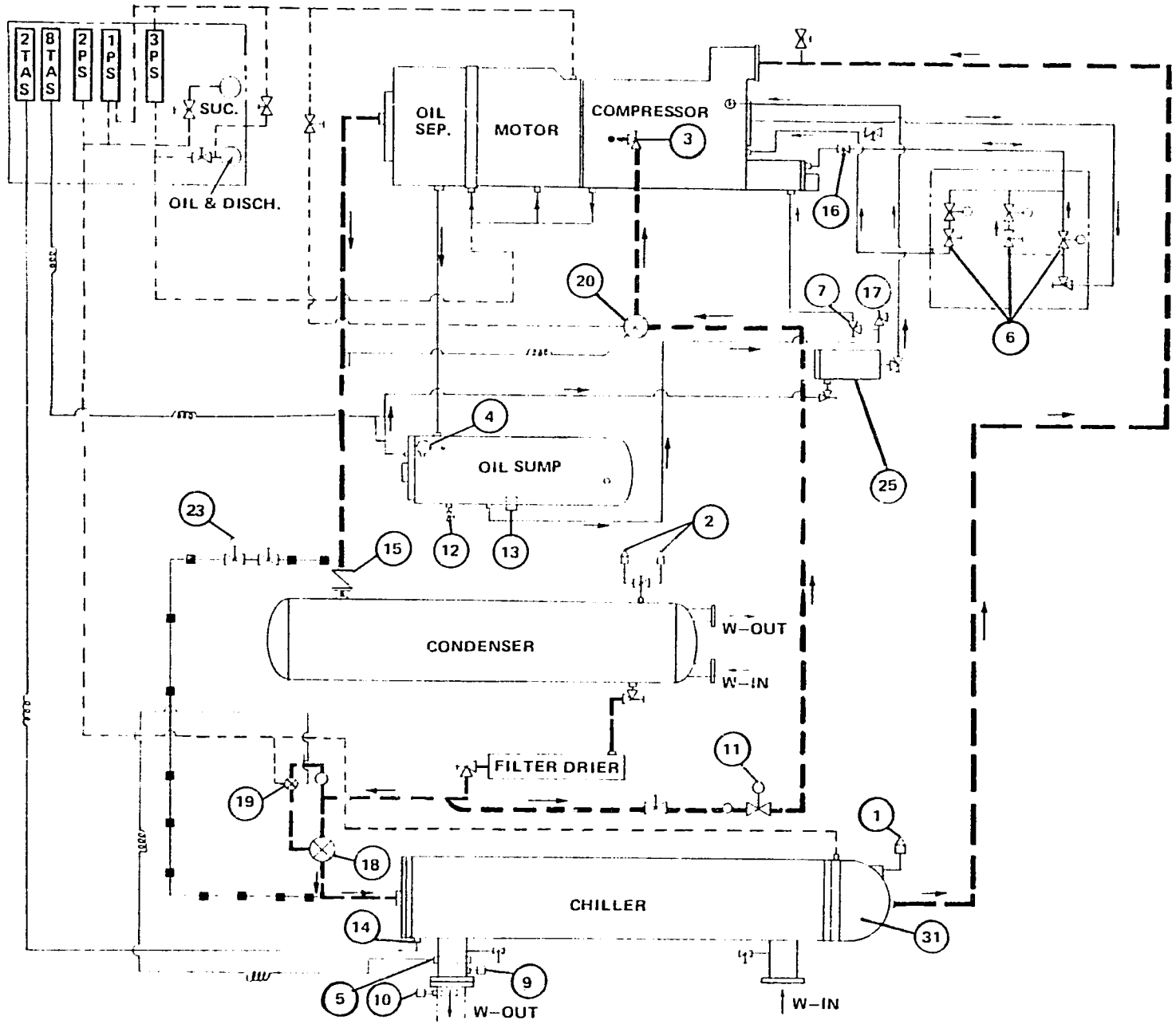

III. OPERATION

E. TYPICAL PIPING SCHEMATICS CONTINUED

NOTE: DO NOT use this piping diagram to troubleshoot your unit. It is typical only and may not reflect the components provided on your unit.

TYPICAL PIPING SCHEMATIC - (PCX290-0)

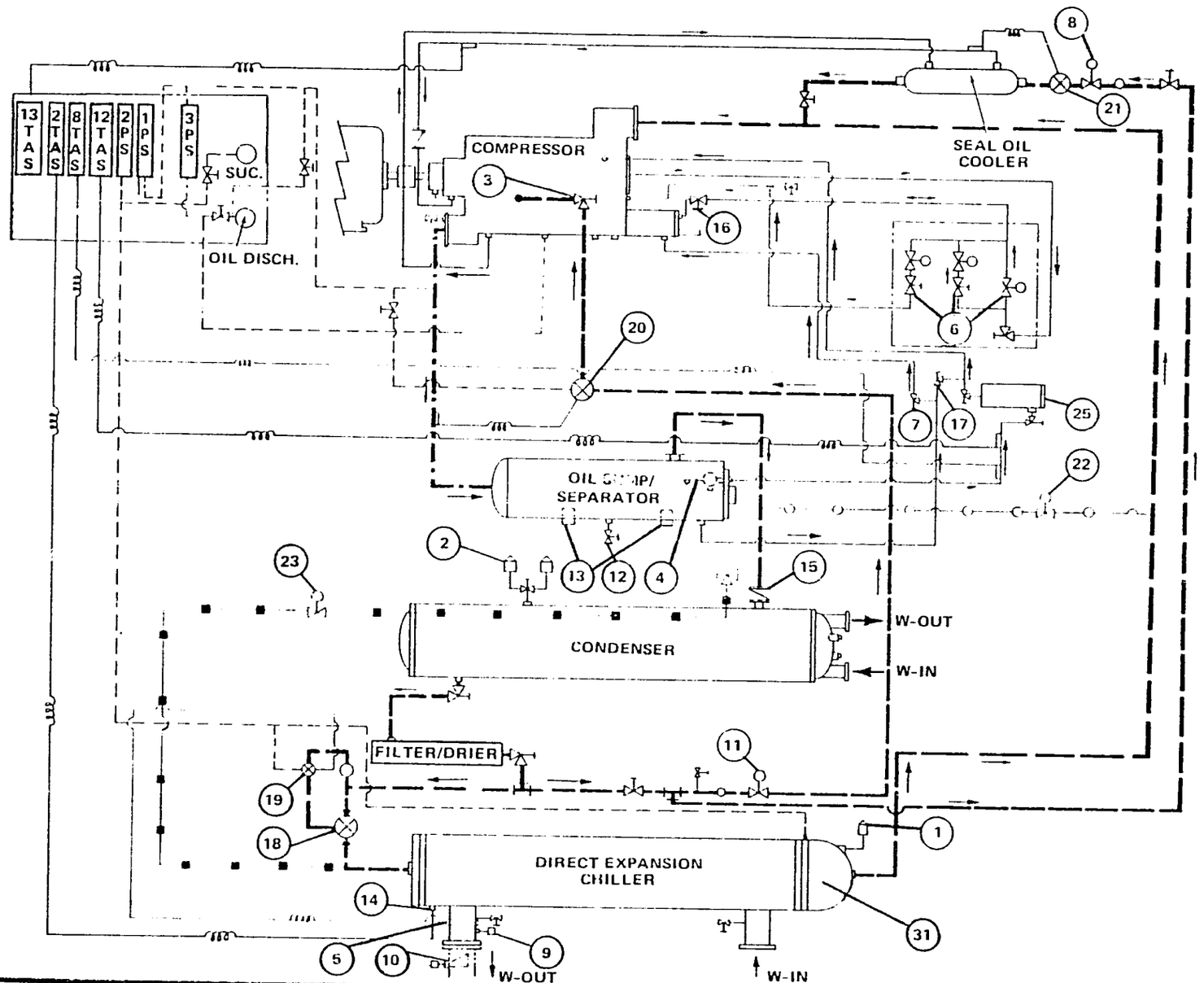

III. OPERATION

E. TYPICAL PIPING SCHEMATICS CONTINUED

TYPICAL PIPING SCHEMATIC FLOODED UNITS

NOTE: DO NOT use this piping diagram to troubleshoot your unit. It is typical only and may not reflect the components provided on your unit.

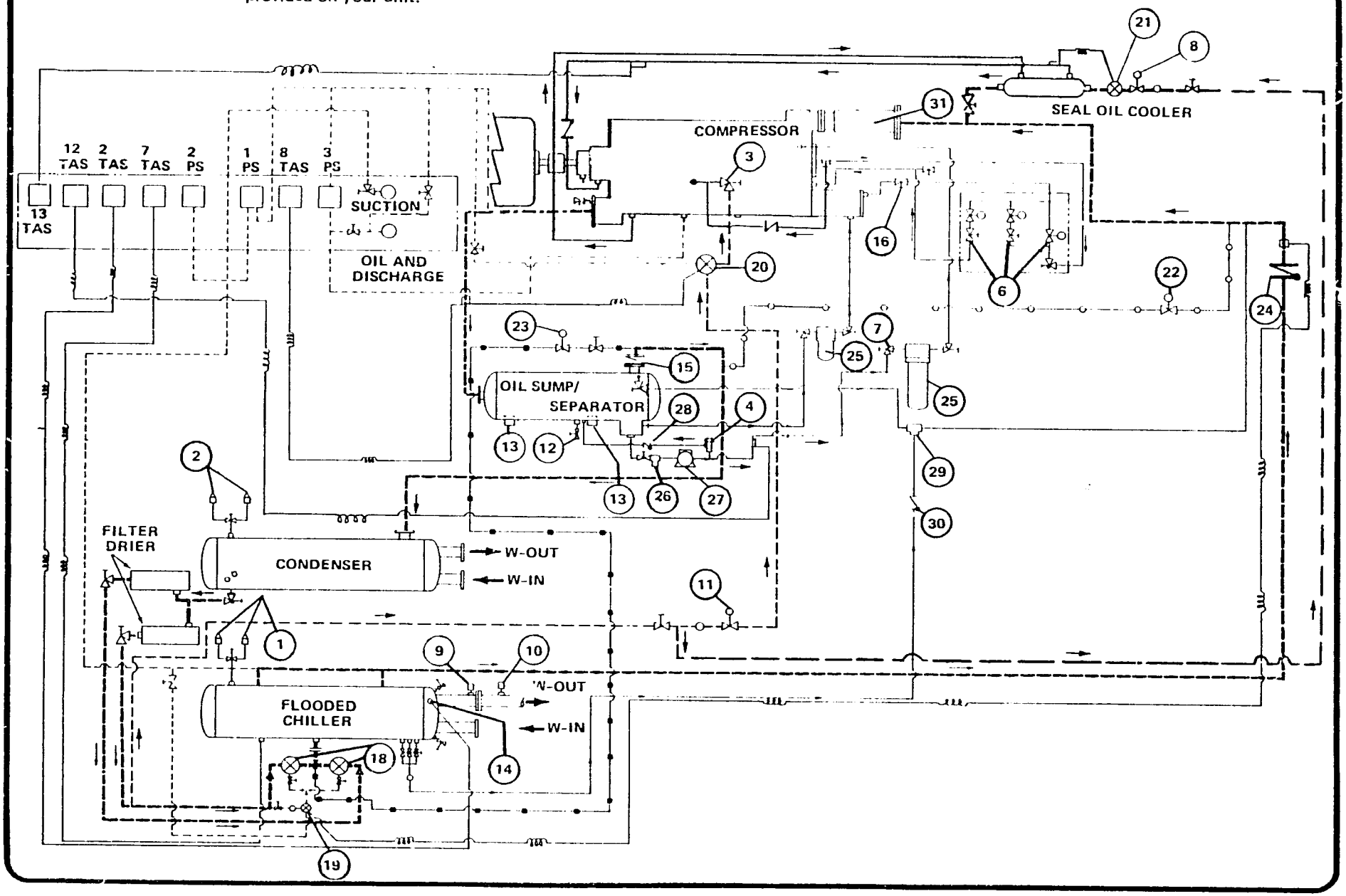

III. OPERATION

F. FUNCTIONS OF ELECTRICAL CONTROLS

Description of controls and the wiring schematics in this manual are typical only. Wiring schematics for a specific unit are shipped with the unit. The wiring schematic also lists control settings.

The electrical panel contains not only controls but also gauges and lights to help determine the phase and quality of operation. The gauges monitor the suction, discharge and discharge oil pressure. The difference between the discharge oil pressure and discharge pressure is the net oil pressure. It should be noted that all gauges should be closed except when they are being read. Indicating lights reflect the following conditions or phases of the unit.

1. LIGHTS

1LT - Power on - integral part of on-off switch (red or white)

2LT - Unit is off on safety controls (red)

3LT - Oil pressure below minimum limits (red)

4LT - Anti-recycle timer is in the timing phase (green)

5LT - Start up delay after the oil pump has started (amber)

2. MANUAL CONTROLS

1CB - Control Circuit Breaker

2CB - Oil Sump Heaters Circuit Breaker

1SS - Master Control Switch - Completes a circuit enabling the unit to start.
Hermetic compressors - If the unit shuts down because a safety switch opened, the switch must be pushed to the "reset" position to reset the motor winding protector (1TAS) and the oil circuit.

Open compressors - If the unit shuts down because of an oil failure, the switch must be pushed to the "off" position to reset the oil circuit.

3. SAFETY CONTROLS

2FU - Compressor Motor Housing Fuse

1TAS - Hermetic Compressor Motor Winding
Protects the motor from overheating by opening the safety circuit if the temperature at any of the three strategically placed sensors exceeds the preset temperature (manual reset).

OL - Compressor and Oil Pump Starter Overloads
Provides locked rotor and overcurrent protection (manual reset).

1PS - Hi-Lo Pressure Switch
Protects against high discharge pressure and low suction pressure. If the discharge pressure exceeds the preset pressure, the contact will open. It must be manually reset on high pressure cutout. If the suction pressure falls below the pre-set pressure, the contact will open. It will automatically reset on low pressure cutout.

13TAS - Seal Oil Temperature Thermostat
Open Compressors
Protects against excessive temperature of the oil cooling the compressor seal. Opens if temperature rises over the preset temperature (see 12TR) (automatic reset).

12TAS - High Oil Temperature
Senses oil temperature after the oil pump. Protects against high oil temperature by opening if the temperature rises above the preset temperature (automatic reset).

7TAS - Low Refrigerant Temperature Protection
Flooded Units
Senses refrigerant temperature in flooded chiller. Will open if temperature falls below preset temperature (automatic reset).

2TAS - Freeze Up Thermostat
Monitors the chilled medium. If the temperature falls below preset temperature, contact will open (automatic reset).

FLS - Chiller Flow Switch
Monitors the flow of the chilled medium. Contact will open if flow falls below preset level.

6TAS - Oil Pump Motor Winding Protector - Hermetic Oil Pump Only
Temperature is monitored by thermostats embedded in the motor winding. Contact will open if preset temperature is exceeded (automatic reset).

CWS - Chilled Water Pump Starter
Auxiliary contact on starter is closed whenever circuit to chilled water pump motor is closed.

1TR - Anti-Recycle Timer
Prevents compressor from starting more than three times in one hour. Completes safety circuit.

4. AUTOMATIC AND OPERATING CONTROLS

HTR - Oil Sump & Compressor Motor Housing Heaters
Must be operating a minimum of twenty-four (24) hours and the sump oil temperature must be at a minimum of 100°F (38°C) prior to start-up. They do not operate during compressor operation.

1CR - Master Control Relay
When all safety controls are closed, relay will close locking itself in and completing a circuit to the remainder of the control circuit.

1M - Oil Pump Starter
Starts oil pump and completes circuit to the remainder of the control circuit.

3TR - Oil Pump Shut Down Time Delay
Starts at same time as oil pump starter, contacts are timed to open circuit to oil pump starter after 60 seconds delay if oil pressure is not proved.

3PS - Oil Pressure Switch
Protects compressor against loss of oil pressure. Opens circuit to oil pressure failure time delay (2TR) when predetermined pressure is reached. If pressure is not reached the timer will time out.

2TR - Oil Pressure Failure Time Delay
Begins timing for 20 seconds upon operation of oil pump starter, or if an oil failure is sensed by 3PS. If oil has not reached predetermined pressure, 3PS will remain closed and in twenty (20) seconds the contact will open and shut down the system (manual reset).

F. FUNCTIONS OF ELECTRICAL CONTROLS CONT.

4TR - **Start-Up Delay**
Begins timing for 60 seconds when the oil pump starter operates. Will close the circuit to the compressor control relay (3CR) in one (1) minute. The purpose is to lubricate the compressor and allow the compressor to unload before starting.

:R - **Transfer Relay**
Activates when the oil pump starter operates. Locks in the oil pump starter and shuts down the oil sump and compressor heaters.

3CR - **Compressor Control Relay**
Completes a circuit to the temperature load controller (TLC), compressor starter control circuit, elapsed time indicator (6TR), seal oil thermostat by-pass timer (12TR), seal oil cooler solenoid (13SOL), liquid injection valve solenoid (8SOL), and opens the circuit to the fast unload solenoid (6SOL) to provide unloaded start.

2PS - **Low Suction Pressure Unload Switch**
Flooded Chillers - senses suction pressure and will complete a circuit to the fast unload solenoid (6SOL) if the pressure falls below the preset level. Direct Expansion Chiller - senses suction pressure completing a circuit to the fast unload solenoid (6SOL), the lock in relay (4CR) and the expansion valve solenoid when the pre-set pressure is reached.

4CR - **Lock In Relay - Direct Expansion Chiller**
When the suction pressure switch (2PS) closes upon low pressure and pumps the unit down, this relay will be energized, locking-in itself and the expansion valve solenoid (4SOL).

6TR - **Elapsed Time Indicator**
Indicates the actual amount of hours the compressor has operated.

12TR - **Seal Oil Thermostat Bypass Timer**
When energized will bypass the seal oil thermostat (13TAS) for a period of four (4) minutes to allow the cooled oil to flow from the seal oil cooler to the compressor seal preventing complete shutdown of the system. If the seal oil temperature has not returned to the preset maximum in this time, the system will shutdown.

4SOL - 5SOL - **Expansion Valve Solenoids**
Controls flow of the refrigerant to the expansion valves used to meet the required refrigeration or air conditioning load.

8SOL - **Liquid Injection Solenoid**
Controls flow of refrigerant to the expansion valves used to control the operating temperature of the compressor.

3TAS - **Low Discharge Temperature Thermostat**
If the discharge temperature is not sufficient, this control will open preventing the liquid injection solenoid from operating.

9CR - **Holding Relay**
Controls the large expansion valve solenoid on units with direct expansion chillers. Will open or close the solenoid depending upon the information received from the reed switches (1RS and 2RS

5RS & 6RS - **Reed or Proximity Switches**
Located on the slide valve indicator, they are activated by a magnet traveling in relationship with the slide valve. They control the large expansion valve solenoid through holding relay 9CR.

1SOL - **Load Solenoid Valve**
When energized, it provides a path to dissipate hydraulic pressure on the slide valve piston which allows discharge refrigerant gas pressure to move the slide valve in the load direction.

2SOL - **Unload Solenoid**
When activated allows pressurized hydraulic fluid to flow through a metering valve to the slide valve piston causing it to move in the unload direction.

6SOL - **Fast Unload Solenoid**
Performs the same function as the unload solenoid except that it does not have a metering valve. It operates at start up to provide a minimum load and when the suction pressure falls below the preset pressure of the Low Suction Pressure Unload Switch (2PS)

8SOL - **Liquid Injection Solenoid Valve**
When activated permits liquid refrigerant to flow to the liquid injection expansion valve.

13SOL - **Seal Oil Cooler Solenoid Valve**
When energized allows liquid refrigerant to flow to the seal oil cooler expansion valve.

TLC - **Temperature Load Controller**
The temperature load controller (TLC) controls a hydraulic cylinder giving the unit an infinitely variable capacity control. It senses the temperature of the chilled water through a sensor located at the chilled water outlet connection. As the water temperature rises or falls, the TLC will signal the unloader system to increase or decrease the compressor capacity to match the load and keep the chilled water at the preset temperature.

When the TLC receives a signal from the chilled water temperature sensor that the load has increased, it completes a circuit to the load solenoid causing the compressor to load. After the required capacity of the compressor is reached the load solenoid will be de-energized. The TLC will continually monitor the temperature sensor completing and opening circuits to the load and unload solenoids as necessary.

The TLC also senses the current draw of the motor through a current transformer located in the starter control panel. If the motor load reaches 100% of the preset maximum load setting, the unload solenoid will be energized and the compressor will unload. The current control will override all other controls in the auto or manual positions.

5. HEAT RECLAIM CONTROLS

All heat reclaim controls, shown on the typical schematic, are used to prevent the packaged chiller from tripping out on high pressure during periods of heat reclaim, to provide higher condensing temperatures during these periods, and to insure a minimum of rejected heat for reclamation during those periods of light cooling load. It is the responsibility of the engineer and contractor of a particular job, to provide controls necessary for the operation and safety of the heat reclaim and chilled water systems external to the packaged chiller.

13PS - **Head Pressure Control**
This control senses discharge pressure, and has three steps of control and is automatically reset:

1. When the first step of rise in pressure is reached, timed relay (11TR) will be activated and power will be available to the low slide valve block relay (6CR) through the low limit relay (7CR).

2. Rise in pressure to close the second stage will prevent the compressor from loading further.

3. If the pressure should rise closing the third step, the control of the unload solenoid (2SOL) by the temperature load controller(TLC) will be bypassed causing the compressor to unload.

11TR - **Heat Reclaim Transition Timer**
When this control is activated the instantaneous contacts open the circuit to the load solenoid (1SOL) preventing it from loading, and closes a circuit to the unload solenoid (2SOL) bypassing the temperature load controller (TLC) causing the system to unload. The timed contact, which is delayed for three minutes, activates the heat reclaim relay (11CR).

11CR - **Heat Reclaim Relay**
Energization of this relay will close a circuit to the load solenoid (1SOL) and open a circuit to the unload solenoid (2SOL). putting them under the influence of the temperature load controller (TLC).

3RS & 4RS - **Low Limit Reed Switches**
These are proximity switches located on the slide valve indicator and are activated by a moving magnet. They are set to prevent the compressor from unloading below 25% of its slide valve position through the low limit control relay (7CR).

7CR - **Low Limit Control Relay**
This relay is activated by the reed switches (3RS & 4RS) and through its action controls the low slide valve block relay (6CR).

6CR - **Low Slide Valve Block Relay**
When the compressor has unloaded to the point at which the reed switches are set, approximately 25% of slide valve position, this control relay will be activated. It will open circuits to the unload solenoid (2SOL) and fast unload solenoid (6SOL) preventing the unit from unloading further. In addition, a circuit is closed to the hot gas solenoid (3SOL).

3SOL - **Hot Gas Solenoid**
When activated this solenoid will allow discharge gas to be bypassed to the inlet side of the chiller.

2PS - **Low Suction Pressure Switch**
Sensing low pressure this switch will cause the compressor to unload through the fast unload solenoid (6SOL) on flooded units and through control relay (12CR) on direct expansion units.

12CR - **Low Suction Pressure Unload Relay Direct Expansion Units**
This relay when activated opens a circuit to the load solenoid (1SOL) and closes a circuit to the unload solenoid (2SOL) bypassing the temperature load controller (TLC).

16TAS - **High Entering Chilled Water Safety Flooded Units**
Senses the chilled water temperature and if it rises to the preset temperature will cause the compressor to unload through the fast unload solenoid (6SOL).

6. HEAT RECLAIM OPTION

1RS & 2RS - **High Limit Reed Switches**
These proximity switches are located on the slide valve indicator and are activated by a magnetic field. They are set to prevent the compressor from loading above a set point.

8CR - **High Limit Control Relay**
This relay is activated by reed switches (1RS & 2RS) and through its action controls the high slide valve block relay (5CR).

5CR - **High Slide Valve Block Relay**
When the compressor has loaded to the point where the reed switches are set, this control relay will be activated. It will open a circuit to the load solenoid preventing it from loading further.

7. TYPICAL START-UP OF PACKAGED CHILLER

Assume that the following conditions are met:

- Water is flowing through the chiller.
- All safety controls are made.
- Power has been furnished to the unit for twenty-four hours and the oil is at the proper temperature.
- Cooling load is available.

The control switch, 1SS, is made and the following action takes place.

1. Power on light (1LT) illuminates the master control relay (1CR) is energized and its contacts close.

2. Through the operation of 1CR the oil pump starter (1M) is energized and the oil pump shut-down relay (3TR) begins timing for 60 seconds before opening its contacts.

494

3. If insufficient pressure differential is sensed by the compressor oil pressure differential switch (3PS), the oil pressure failure time delay relay (2TR) and oil pump time delay relay (3TR) will simultaneously start to time. (2TR) will time open after 20 seconds and (3TR) will time open after 60 seconds. This action will de-energize the transfer relay (2CR). Its contacts will open and de-energize the oil pump, preventing the machine from starting. If the unit is operating this action will shut the unit off.
4. When the start-up time delay (4TR) has completed its timing function, it will energize the compressor control relay (3CR).

- **Direct Expansion Units** - Starting sequence is as indicated in steps 1 thru 4 above plus:

5. Control Relay (3CR) completes a circuit to the compressor starter, the elapsed time indicator (6TR) and furnishes power through the transformer (2T) to the temperature load controller (TLC). It also furnishes control power to the pumpdown switch (2PS). It also opens a circuit to the fast unload solenoid (6SOL).
6. When the compressor has pumped down the low pressure switch (2PS) will close, furnishing power to the lock in relay (4CR), and the expansion valve solenoid (4SOL). The expansion valve will begin to feed the unit and the unit will now be under the influence of the temperature load controller (TLC).

- **Flooded Units** - Starting sequence is as indicated in steps 1 thru 4 above plus:

5. Control relay (3CR) completes the circuit to the compressor motor starter, the elapsed time indicator (6TR), and furnishes power through the transformer (2T) to the temperature load controller (TLC). The expansion valves (4SOL & 5SOL), liquid injection solenoid (8SOL), seal oil cooler solenoid (13SOL), and seal oil thermostat are also energized. 3CR also opens a circuit to the fast unload solenoid. The compressor will now be under the control of the temperature load controller (TLC).

- **Heat Reclaim Units** - Starting sequence is as indicated in steps 1 thru 4 above plus:

5. Control relay (3CR) completes a circuit to the compressor starter control circuit, expansion valves (4SOL & 5SOL), seal oil cooler solenoid (13SOL), liquid injection solenoid (8SOL) seal oil thermostat bypass timer (12TR), elapsed time meter (6TR), and furnishes power through the transformer (2T) to the temperature load controller (TLC). It also opens a circuit to the fast unload solenoid (6SOL). The unit is now operating directly under the temperature load controller (TLC).

STARTER CONNECTIONS

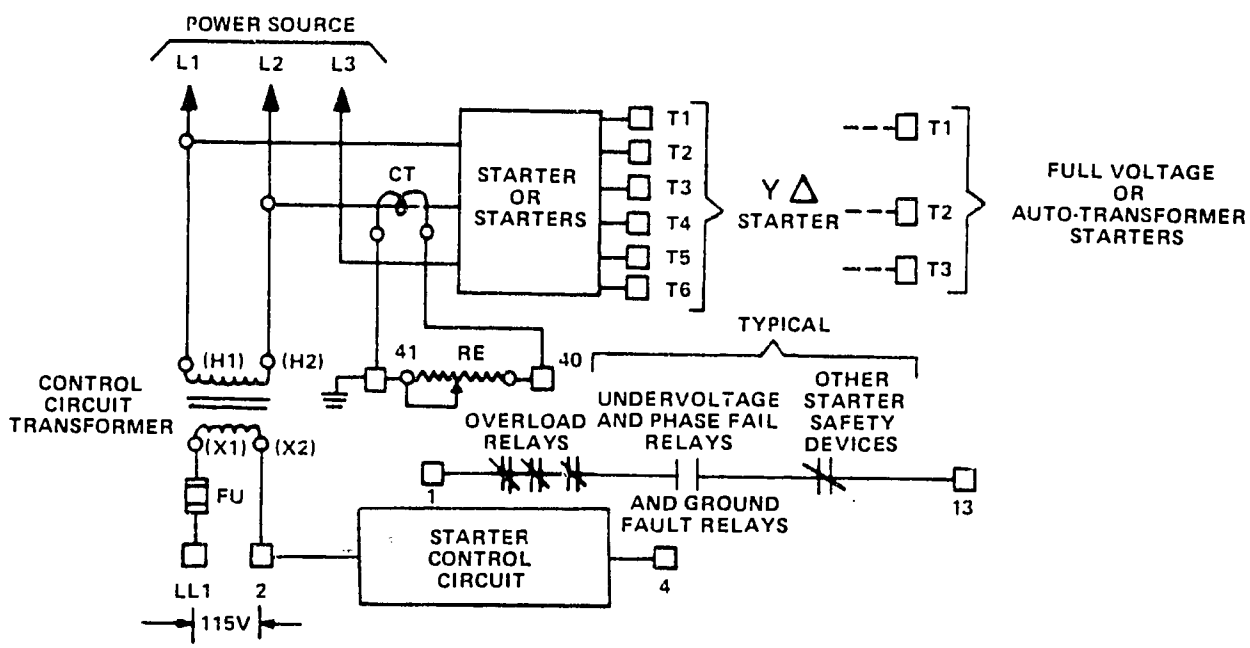

NOTES:

1. Control transformer is optional. X2 is to be grounded only when transformer is furnished.
2. Starter must be under direct control of terminals 2 & 4. No device either manual or automatic shall be used which will stop or start the compressor motor independently of the signal applied to terminals 2 & 4. Any such necessary devices shall be connected between terminals 1 & 13 as shown under "typical" above and shall be manual reset.
3. Field wiring terminals must be numbered as shown and must be directly connected to like numbered terminals in PCX/DBX control panel.

G. TYPICAL ELECTRICAL SCHEMATICS

TYPICAL HERMETIC - FLOODED CHILLER

These diagrams are typical only. Consult the diagram accompanying the unit for control settings and wiring logic.

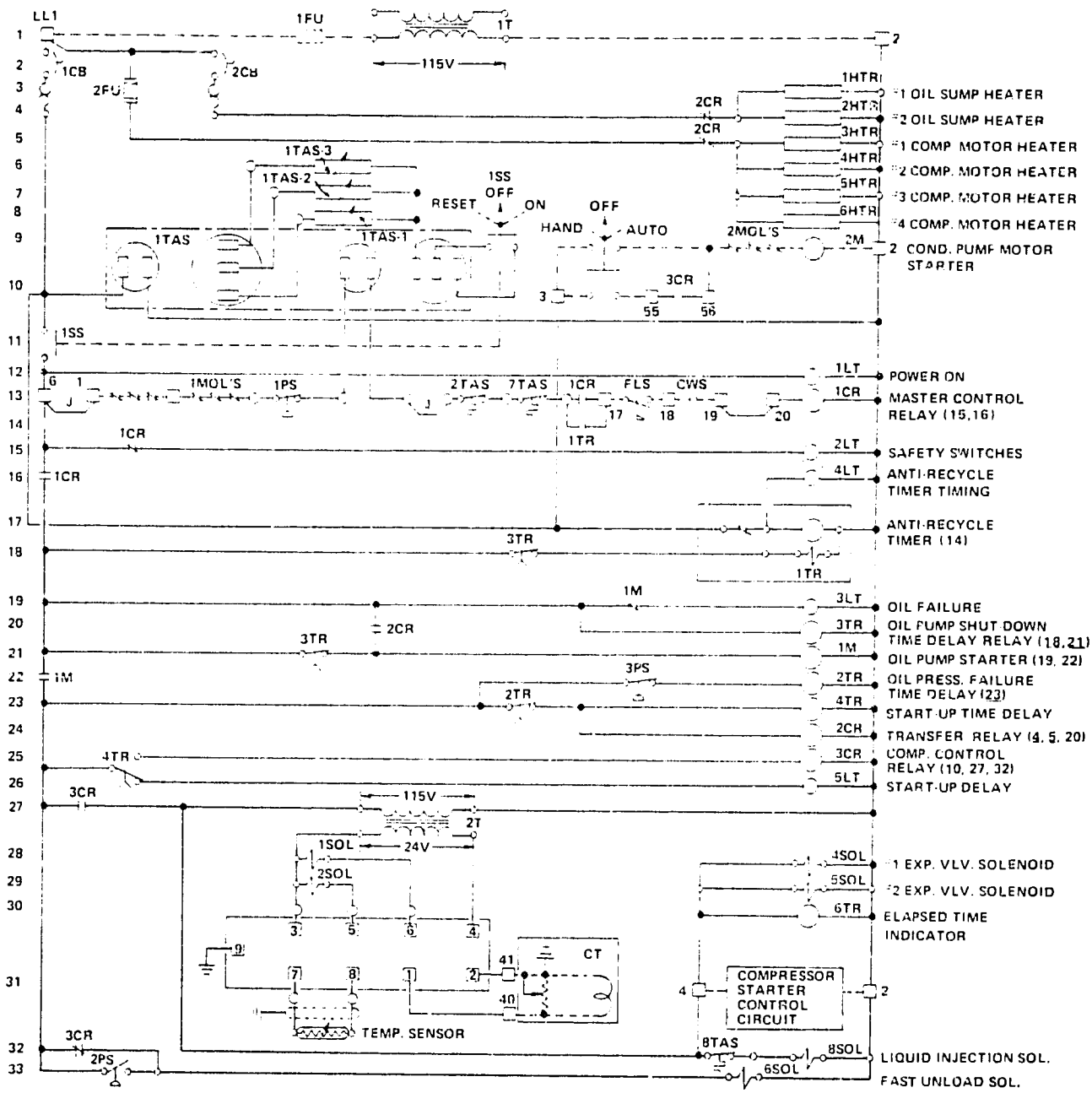

G. TYPICAL ELECTRICAL SCHEMATICS CONTINUED

TYPICAL HERMETIC - DIRECT EXPANSION CHILLER

These diagrams are typical only. Consult the diagram accompanying the unit for control settings and wiring logic.

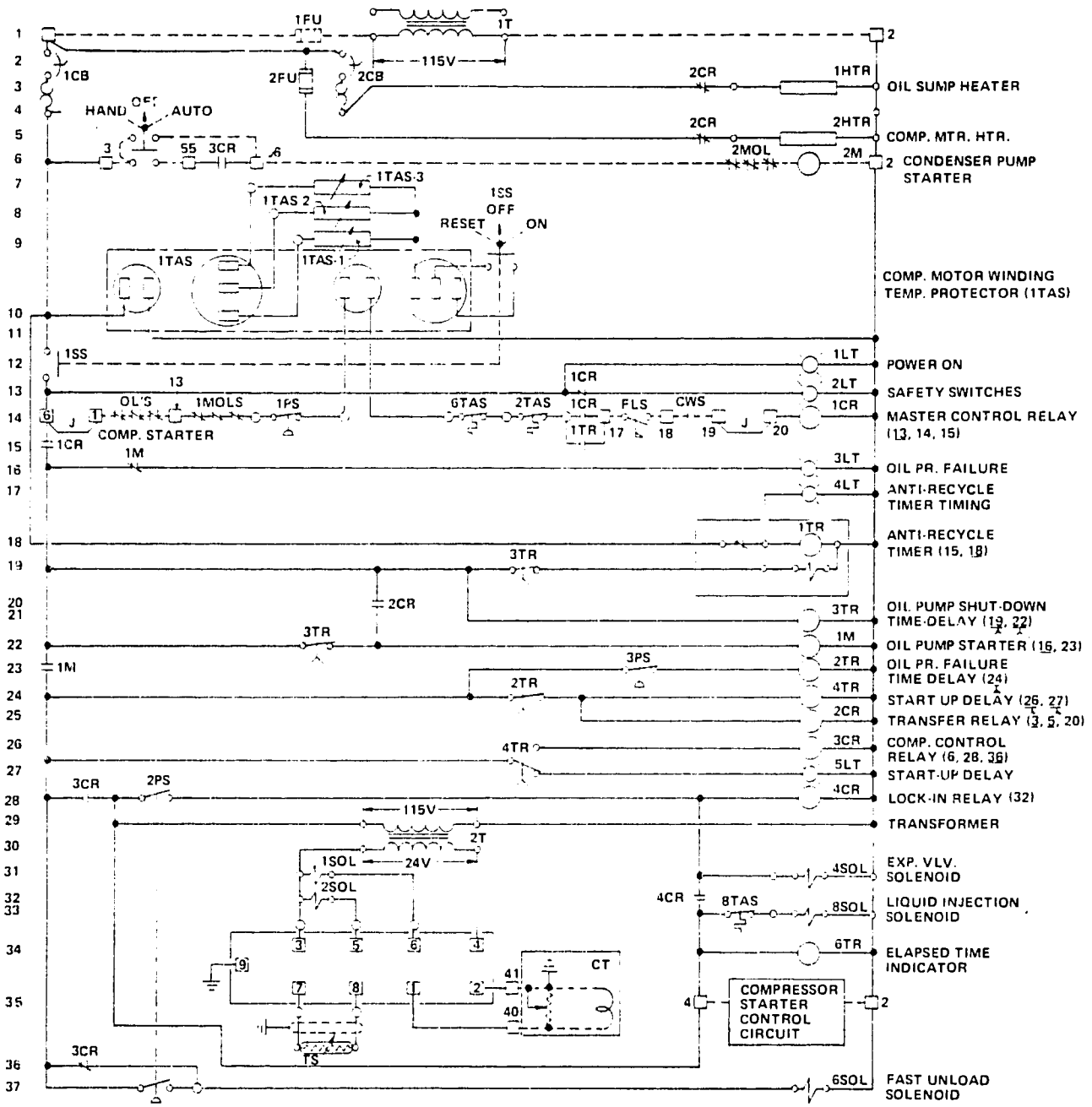

TYPICAL DIRECT DRIVE DIRECT EXPANSION CHILLER

These diagrams are typical only. Consult the diagram accompanying the unit for control settings and wiring logic.

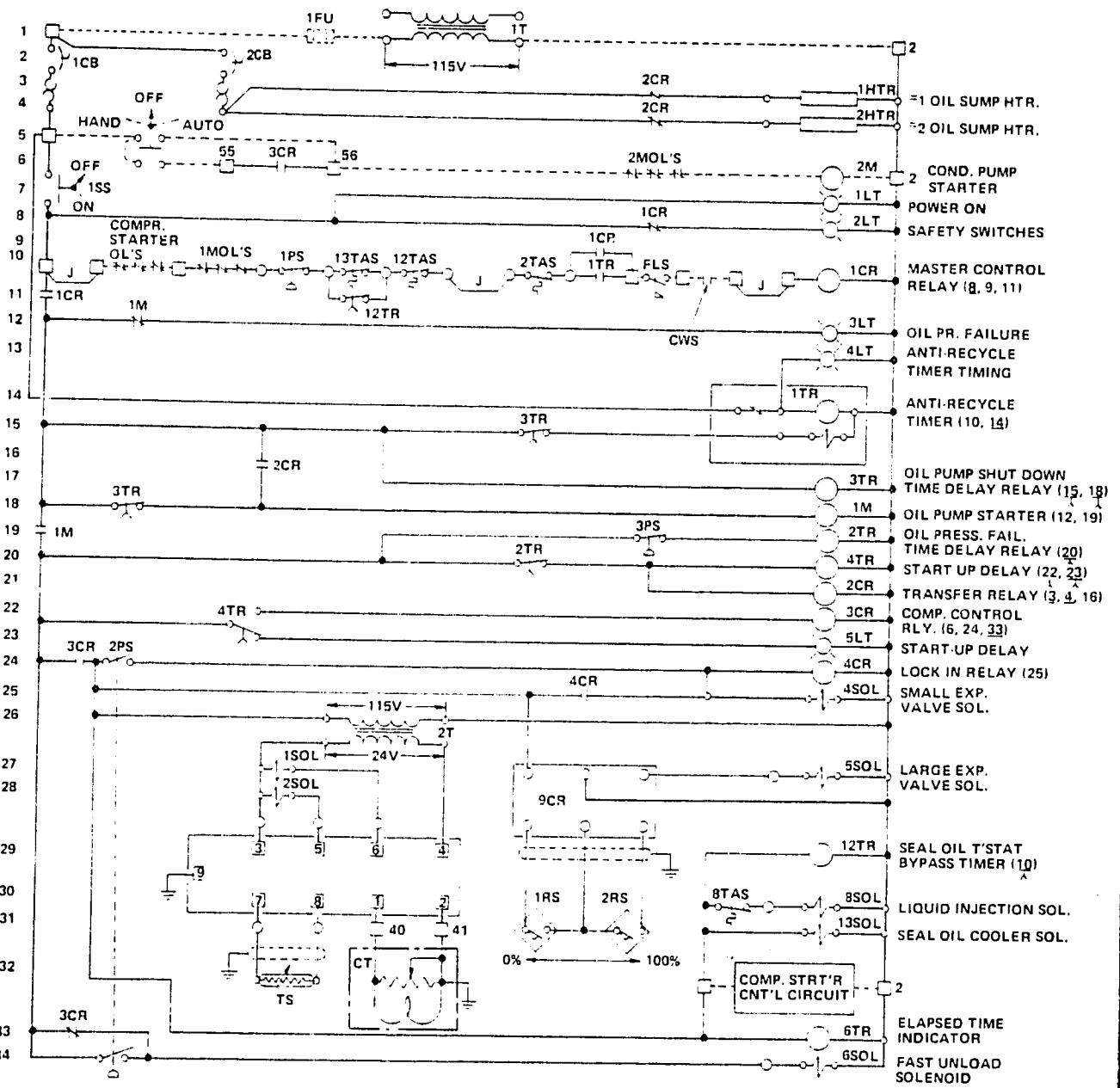

498

TYPICAL DIRECT DRIVE - FLOODED CHILLER

These diagrams are typical only. Consult the diagram accompanying the unit for control settings and wiring logic.

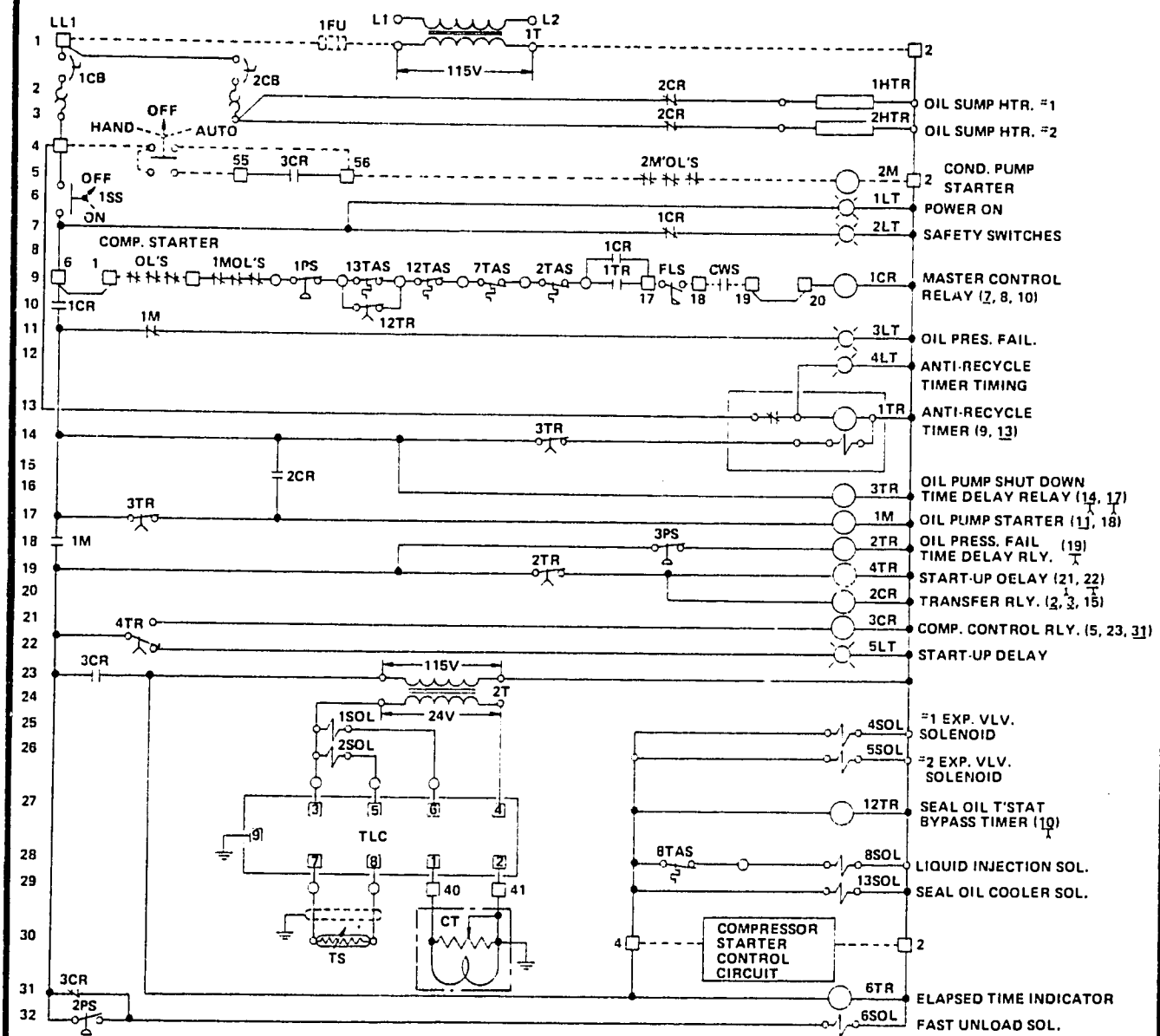

4'19

G. TYPICAL ELECTRICAL SCHEMATICS CONTINUED

TYPICAL DIRECT DRIVE - HEAT RECLAIM WITH DIRECT EXPANSION CHILLER

These diagrams are typical only. Consult the diagram accompanying the unit for control settings and wiring logic.

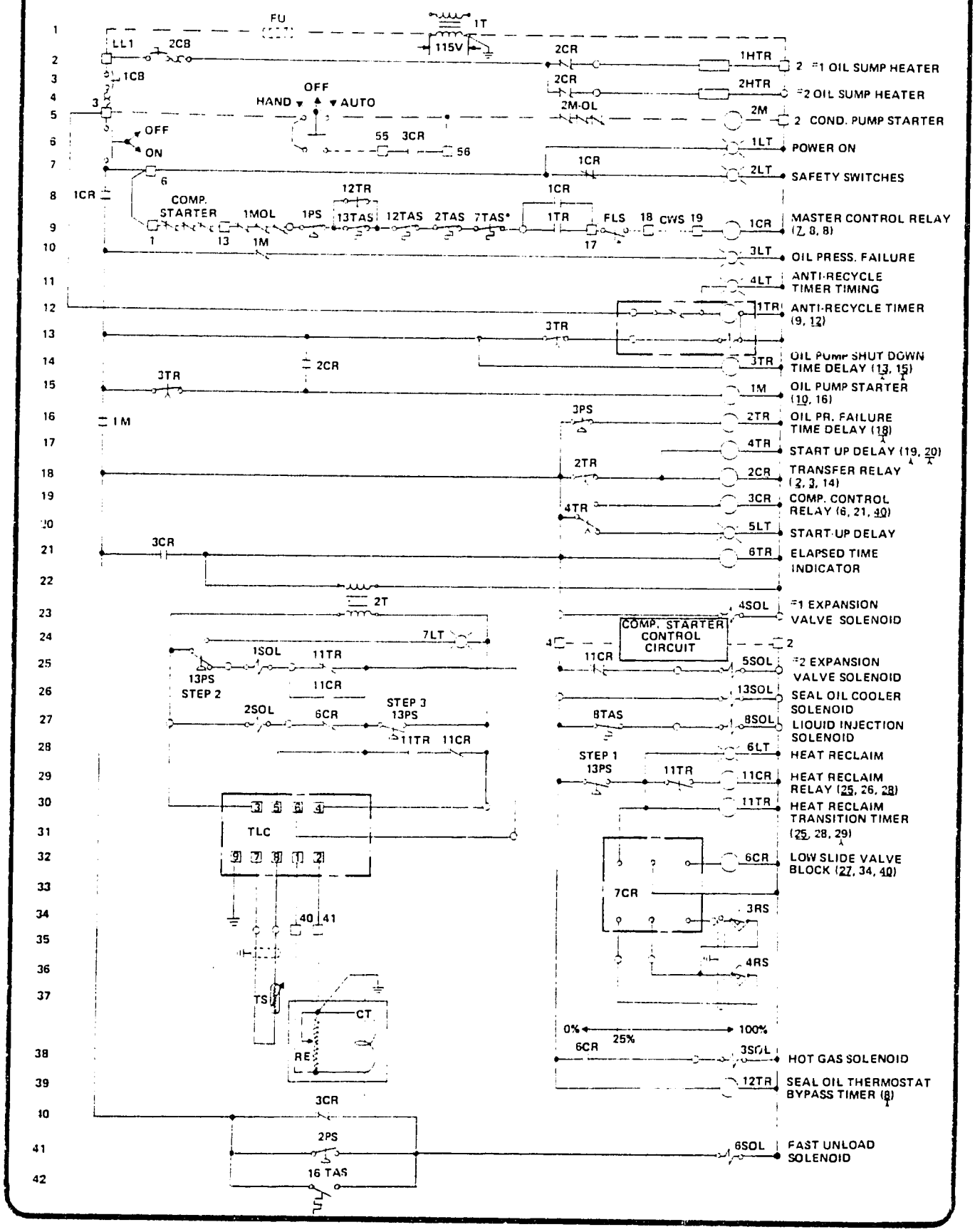

G. TYPICAL ELECTRICAL SCHEMATICS CONTINUED

TYPICAL DIRECT DRIVE - HEAT RECLAIM WITH FLOODED CHILLER

These diagrams are typical only. Consult the diagram accompanying the unit for control settings and wiring logic.

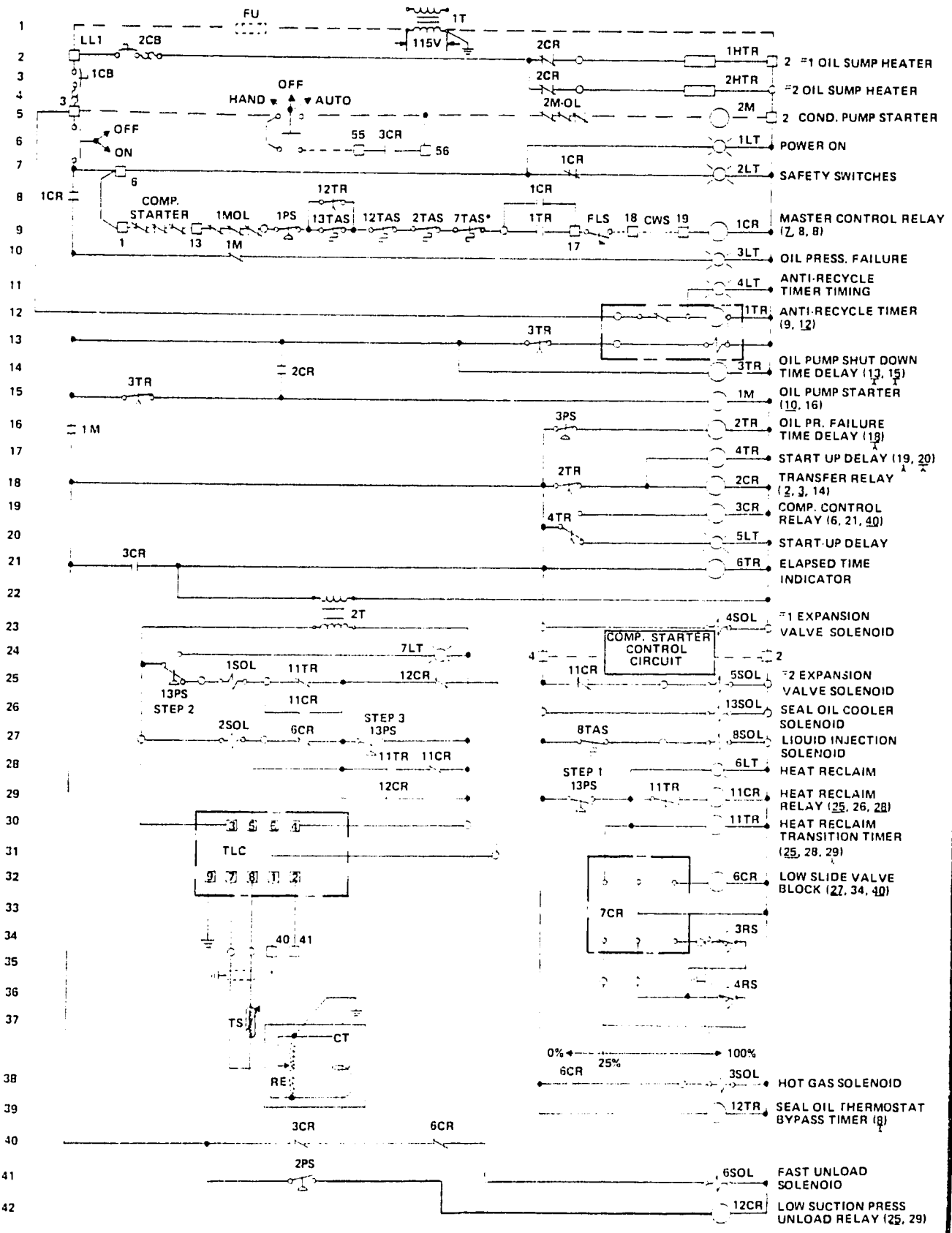

IV. MAINTENANCE

A. GENERAL

Maintenance personnel should become thoroughly familiar with the unit and the contents of this manual in order to properly diagnose and rapidly correct and prevent minor difficulties. Routine or periodic maintenance should be followed to insure a comprehensive preventative maintenance program minimizing costly repairs. National Service Bulletins as referenced in this section, may be obtained from Dunham-Bush, West Hartford, Connecticut, 06110, National Service Department.

CAUTION: All valve caps, packing glands and pipe plugs must be tightened securely after performing maintenance and/or periodically, to prevent refrigerant leakage.

WARNING: All inspection, maintenance, or repairs should be done by an authorized, qualified, Dunham-Bush, Inc., Service Representative as listed in the latest edition of Form No. 9822. Failure to comply may jeopardize the warranty.

B. PERIODIC MAINTENANCE

1. PRE-INITIAL START-UP MAINTENANCE

a. Insure unit is level.

b. Check for any piping stresses on unit.

c. Check coupling alignment. (Direct drive compressor and oil pump motors)

d. Tighten all wiring connections.

e. Check tripping of safety controls for grounding. (See Typical System Tests Section)

f. Check compressor housing heaters and oil sump heaters for proper operation.

g. Check all control and starter wiring connections for grounding.

h. Sump oil level must be visible in sump sight glass, sump oil temperature must be at a minimum of 100°F (37.8°C).

j. Hydronic system must be vented free from entrapped air, and the piping properly supported to the unit.

k. All satellite equipment and associated control devices must be operationally checked and capable of handling their design capacities.

m. Inspect for external refrigerant leaks with an electronic leak tester or halide torch.

n. Perform "insulation resistance test" and record temperature and meg ohm readings. Consult National Service Bulletin SR112 for additional information.

p. Check refrigerant indicators for evidence of moisture.

NOTE: If moisture is evident prior to initial start-up, the refrigerant indicators should be monitored after start-up to insure that the moisture is removed. If moisture is evident after minimal running time, the unit must be shut-down and the filter drier elements replaced. (See Component Maintenance Section)

r. Adjust limit switches.

2. POST INITIAL START-UP AND DAILY MAINTENANCE

NOTE: A log of daily readings should be maintained. (Refer to Maintenance Records Section)

a. Check suction superheat conditions after start-up for proper adjustment at thermal expansion valve. (Refer to Component Maintenance Section)

b. Inspect sight glasses for the following:

- Liquid Line, Inlet Side of Pilot Valve - Inspect for a full glass free from bubbles.
- Condenser Sight Glass (if equipped) - Inspect level to be visible.
- Liquid Injection Line Sight Glass (if equipped - Sight glass (downstream of solenoid) will be nearly empty if liquid injection solenoid is off. Sight glass will be full of liquid refrigerant, (if located upstream of TX valve) or flashing refrigerant (if located downstream of TX valve).

c. Check and record the following:

- Suction, discharge and oil pressures.
- Condenser inlet and outlet water temperatures.
- Chiller inlet and outlet cooling medium temperatures.
- Compressor motor amps.
- Oil Temperature.
- Compressor motor voltage.
- Discharge Temperature

d. Initial seal drainage collection (direct drive compressor) can be 0.31 cubic inches per hour (5 cc per hour) after start-up. After the unit has run a seven day break-in period, the normal seal drainage is 0.06 to 0.24 cubic inches per hour (1 cc to 4 cc per hour).

e. Check evaporator oil return (if equipped) to be at liquid level. (Refer to Component Maintenance Section)

f. Rotate capacity control hot gas bypass (optional) throttling valve to proper adjustment after initial start-up.(Refer to Sub-System Maintenance Section)

g. Check refrigerant indicators for evidence of moisture. Change filter drier elements if required. (Refer to Component Maintenance Section)

3. 1000 HR. (MONTHLY) INTERVAL MAINTENANCE

NOTE: A log of 1,000 hour readings should be maintained, and the data compared to daily values for evidence of operational changes, i.e. condensing pressure, superheat temperatures, compressor/oil pump motor current amps, etc. (refer to maintenance records).

3. 1,000 HR. INTERVAL MAINTENANCE - CONT.

a. Check oil sump sight glass to be at proper level.

b. Check oil filter pressure drop and replace filter elements if necessary. A clean filter will have 1 to 2 psid (6.9 to 13.8 kPa). The oil filter should be changed at 6 psid (41.4 kPa) pressure drop across the filter.

c. Check gages and controls for proper operation and calibration.

d. For other than water chiller applications, field test chiller cooling medium for proper freeze point. (Brine applications, check pH)

e. Inspect all motor starter control relay contacts for arcing and replace if required. Check thermal switch heaters and starter linkages for proper operation.

f. Check compressor and oil sump heaters for proper operation.

g. Check and record the following additional items:

- Oil temperature at manifold
- Oil pump motor current
- Oil pump motor voltage
- Suction superheat
- Discharge superheat
- Chiller and condenser pressure drop

h. Check filter drier pressure drop (Maximum operational pressure drop across filter is 5 psid (34.5 kPa)

j. Check unloaders for proper loading and unloading speed. For a full stroke a maximum of two (2) minutes should elapse.

k. Check all sub-systems for proper operation, i.e. seal oil cooler, evaporator oil return, vapor injection, liquid injection, water cooled oil cooler. (Refer to Oil Cooling System Maintenance Section and Sub-System Maintenance Section)

m. Check condenser water regulating valve(s) for proper adjustment.

4. 3,000 HOUR INTERVAL MAINTENANCE

a. Check coupling alignment (direct drive compressors, oil pump).

b. Field test oil for acidity. Take action if required. Low temperature and heat reclaim require professional analysis at 3,000 interval. Refer to National Service Bulletin SR96.

NOTE: PH factor and total acid number (TAN) are highly responsive to moisture.

c. Perform "insulation resistance test" (Hermetic compressor, oil pump motors) and record meg ohm and temperature readings (refer to test procedures).

5. ANNUAL MAINTENANCE

a. Send sample of oil to laboratory for thorough analysis. Records of the analyses will provide a continuous case history, and insight, as to what system components have contributed to the quality of the oil. Refer to National Service Bulletin SR96 for analyses information. Change oil if required.

b. Send sample of chiller medium and condenser water to laboratory for analysis. This will provide insight as to what maintenance may be performed to prevent corrosive chemical activities. (See component maintenance)

c. Send sample of refrigerant to manufacturer for professional analysis of contamination. Water content should not exceed 20 PPM.

d. Check, recalibrate operating and safety controls. Design settings are noted on the particular job wiring diagram. (See system tests)

e. Inspect and clean all satellite equipment per manufacturer's recommendations.

f. Check compressor seal for refrigerant and excessive oil leakage. If a maintenance action is necessary, refer to the latest edition of the DBX Compressor Manual 6136. If necessary, an update to the latest seal design is recommended.

g. Check compressor thrust bearings by loosening coupling center and checking male rotor for axial float. If axial float exists, refer to Compressor Service Manual 6136 for thrust bearing service/replacement.

h. Insure compressor coupling is aligned.

j. Lubricate compressor motor (direct drive) per manufacturer's recommendations.

k. Perform "insulation resistance test" (Hermetic compressor/oil pump motors)

m. Remove condenser heads, and have tubes inspected for corrosion by a professional agency. Clean condenser and heat exchanger(s) as outlined in this manual. Failure to comply may result in system problems. Plug or replace tubes if required.

n. Check, re-adjust oil pump end clearance. Align oil pump motor coupling (direct drive oil pump).

6. 25,000 HOUR MAINTENANCE

a. Perform annual maintenance.

b. Replace compressor shaft seal with latest version.

c. Inspect/replace compressor unloader, injection tube, and slipper seal parts if abnormal operation exists.

d. Inspect/replace compressor unloader guide block if wear is evident. Check slide valve guide and spindle snap rings for security.

e. Check compressor balance piston/sleeve clearance. Replace if beyond limits or if there has been any changes in unit oil pressure.

f. Check rotors for radial and lateral movement. If movement is beyond pre-selected limits, take appropriate action or consult National Service.

g. Hermetic Motor

- Meg motor and compare with previous readings.
- Replace motor terminal bushings with latest design bushings if not previously updated. Re-meg motor after reassembly and record.

7. 50,000 HOUR MAINTENANCE

a. Repeat 25,000 hour maintenance.

b. Replace thrust bearing.

c. Hermetic motor inspection.

- Meg motor and compare with previous readings.

B. PERIODIC MAINTENANCE CONTINUED

- Have motor service engineer inspect motor. If any significant deterioration of epoxy, lashings, or insulation exists, arrange to have motor repaired by approved motor service company. Remeg motor after reassembly and record.

- Inspect hermetic motor bearings and thrust washers for abnormal wear.

8. 75,000 HOUR MAINTENANCE

A major disassembly and inspection of the compressor is to be made. The compressor condition will determine if it should be field rebuilt or scheduled for a factory exchange rebuild.

9. SEASONAL SHUT-DOWN MAINTENANCE

a. Shut down PCX Unit in normal manner and partially pumpdown system.

b. Perform annual maintenance.

c. If unit is located where ambient temperature will be below freezing, drain all water thoroughly and blow out tubes (flooded chiller) or vessel (direct expansion chiller) with compressed air.

NOTE: Simply draining is not sufficient.

d. Open disconnect switches.

e. Run the oil pump periodically to fill the pump seal cavity with oil. This will prevent refrigerant from leaking. (Direct Drive Units)

C. MAINTENANCE RECORDS

1. LOGS

It is recommended that permanent daily records of system operating conditions be recorded at least once a day. The records should be retained as they are invaluable in determining patterns of operational change that will indicate the need for maintenance or service. System design conditions are established by the readings entered when the unit is first installed. Dunham-Bush, Inc., Form No. 9181 Log Sheet (See Appendix A), will serve this function admirably.

NOTE: In addition to the Daily/Monthly Log sheets, annual and seasonal maintenance is required. (See Periodic Maintenance Section)

The locations on the unit from which data may be obtained are shown in Figures 18 thru 22 for a typical unit.

The log sheets should be reviewed and evaluated periodically to determine operational trends.

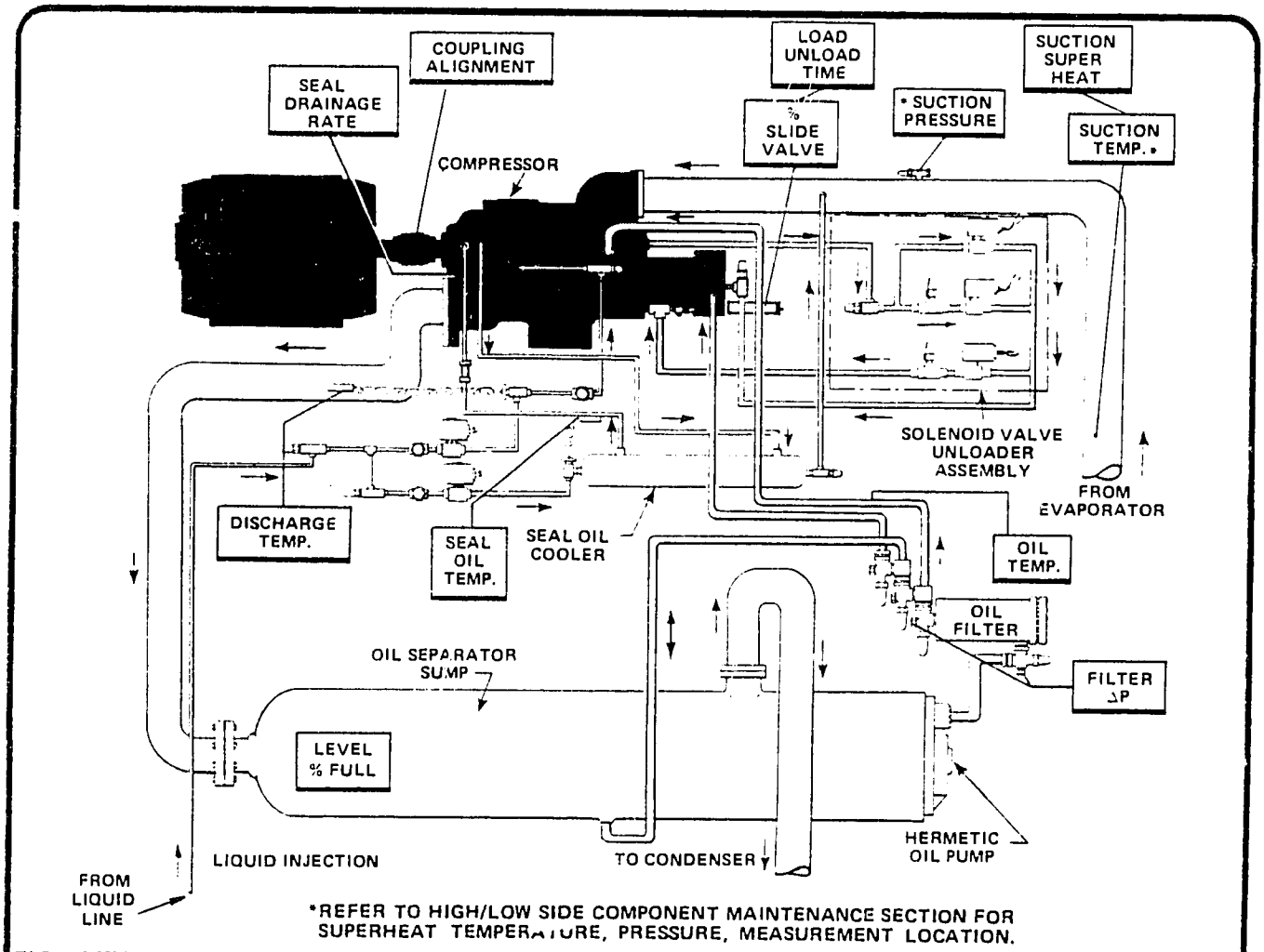

FIG. 18 TYPICAL DIRECT DRIVE COMPRESSOR WITH INTEGRAL SEPARATOR SUMP AND HERMETIC OIL PUMP

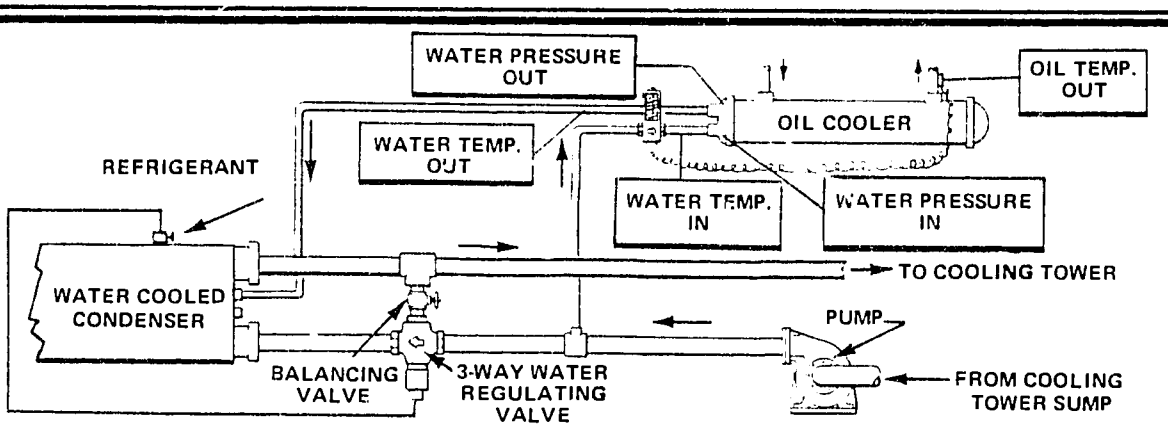

FIG. 19 TYPICAL WATER COOLED OIL COOLER (LOW TEMPERATURE APPLICATIONS)

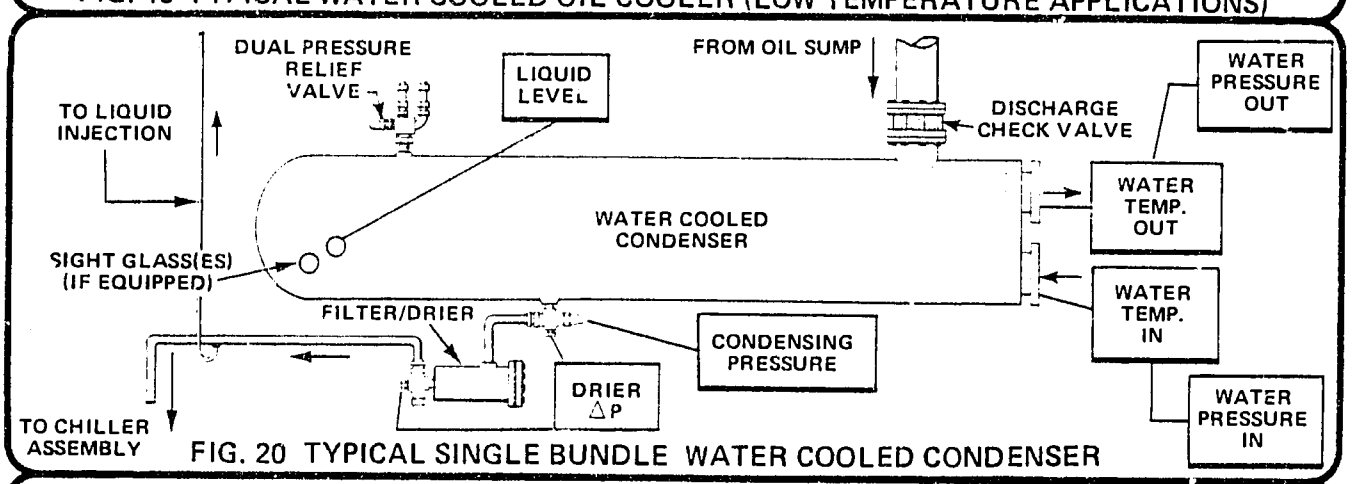

FIG. 20 TYPICAL SINGLE BUNDLE WATER COOLED CONDENSER

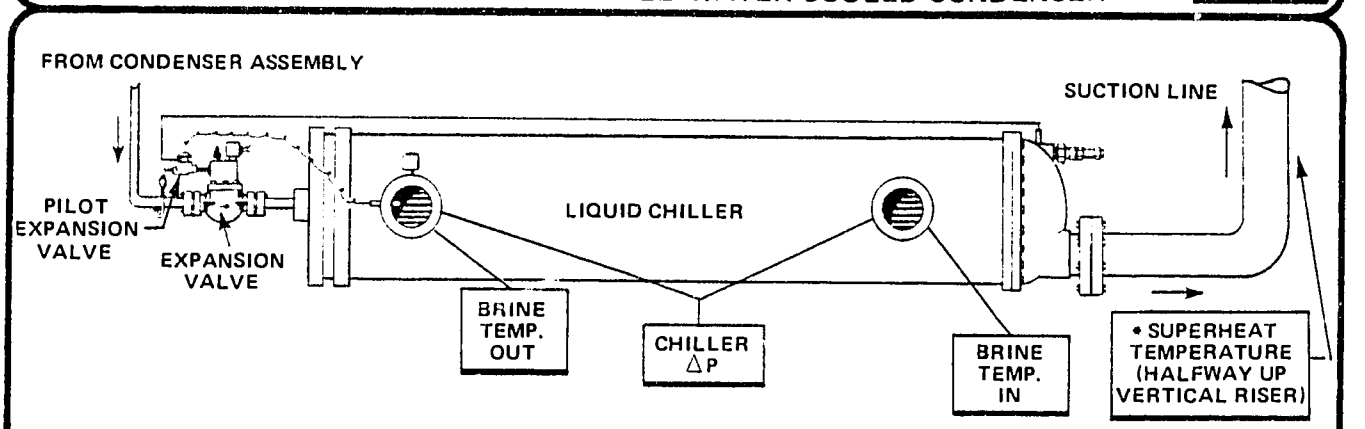

FIG. 21 TYPICAL DIRECT EXPANSION CHILLER

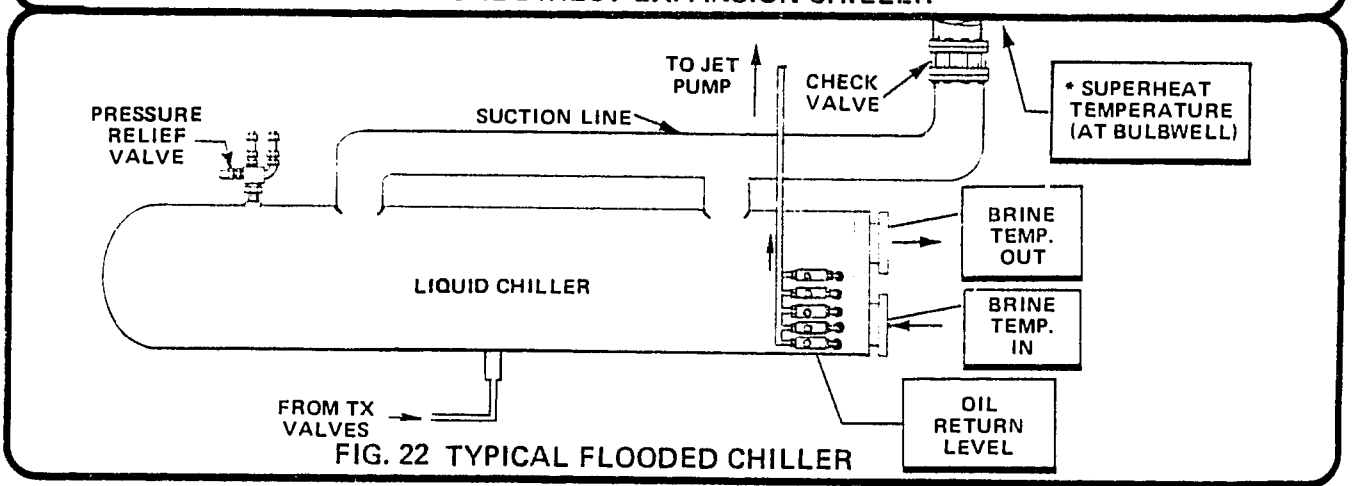

FIG. 22 TYPICAL FLOODED CHILLER

*REFER TO HIGH/LOW SIDE COMPONENT MAINTENANCE SECTION FOR SUPERHEAT TEMPERATURE, PRESSURE, MEASUREMENT LOCATION.

IV. MAINTENANCE

D. OIL REMOVAL/ADDITION

1. RECOMMENDED OILS

Dunham-Bush uses only two viscosity classifications; 150 SUS (Saybolt Universal Seconds) measured at 100°F for low temperature applications and 300 SUS measured at 100°F for high and commercial temperature applications. All other oil viscosities are not approved for use in Dunham-Bush compressors.

NOTE: Mixing of oil is not recommended. Oil should be thoroughly drained and replaced when changing oil brands. Consult factory for any other oil types.

The following Napthenic base oils are recommended.

	SST*	
	Low Temp.	Commercial or High Temp.
	(-40°F to 0°F) (-40°C to -17.8°C)	(+1°F to +50°F) (-17.2°C to +10°C)
COMPANY †	150 SUS (31.8 Cst)	300 SUS (64.6 Cst)
Sun Oil Company	Suniso 3GS	Suniso 4GS
Texaco	Capella B	Capella D

*Saturated Suction Temperature

†These oils are subject to periodic change. Consult the latest edition of National Service Bulletin SR42.

2. APPROXIMATE OIL CHARGES FOR STANDARD PACKAGES

NOTE: Packages with non-standard vessel selections may have different oil charges. The oil capacities listed are for purchasing purposes only. Refer to Oil Replenishment Section for proper oil level.

	APPROXIMATE OIL CHARGE					
	Hermetic		Direct Drive		Direct Drive Heat Reclaim	
Model PCX -	U.S. Gallons	Liters	U.S. Gallons	Liters	U.S. Gallons	Liters
120	26	98.4	21	79.5	24	90.8
150	26	98.4	21	79.5	24	90.8
180	26	98.4	21	79.5	24	90.8
230	27	102.2	24	90.8	28	106.0
290	27	102.2	24	90.8	28	106.0
350	27	102.2	24	90.8	28	106.0
400	30	113.6	35	132.5	-	-
450	-	-	44	166.5	-	-
500	-	-	44	166.5	-	-
580	-	-	45	170.3	-	-
630	-	-	45	170.3	-	-
700	-	-	46	174.1	-	-
750	-	-	47	177.9	-	-

3. OIL REMOVAL

NOTE: If oil from sump has been tested and evaluated to be re-usable, ensure that the container is clean and can be properly sealed to prevent entry of contaminants.

SP-1 *(Oil Removal)*

1. Attach hose between oil sump drain valve and a clean, vented, 55 gallon (200 liters) drum.

2. Drain oil slowly until oil ceases to flow. Oil will foam up.

3. Change oil filter(s) (Refer to SP-17)

4. OIL REPLENISHMENT

NOTE: It is desirable to coordinate oil addition with system evacuation so that oil can be drawn in utilizing the partial vacuum. Oil should be drawn into the oil sump during the final stages of evacuation. (Refer to Evacuation/Dehydration Procedures)*(SP-7 thru SP-12)*

SP-2 *(Oil Replenishment, Partial Vacuum Method)*

1. Connect a service hose to the oil sump drain valve and to a vented container of new or re-usable oil.

CAUTION: Hose should be purged with oil and care must be exercised not to incorporate air into the system.

2. Charge sump until oil level in sump is 1/3 to 1/2 of the (top) sight glass. Continue evacuation procedures.

SP-3 *(Oil Replenishment Portable Pump Method)*

CAUTION: For adding oil to a system under pressure, the portable pump should have a design working pressure of 150 to 200 PSIA, (1034.2 to 1379 kPa), and a capability to pump to 150 PSI (1034.2 kPa) from atmospheric pressure. Recommended capacity is 2 to 3 GPM (76 to 114 liters/min.)

NOTE: To facilitate sight glass inspection, a flashlight may be used.

1. With unit off and oil at normal temperature (100°F to 150°F), (37.8°C to 65.6°C), inspect for proper oil level to be at 1/3 to 1/2 of the (top) sight glass; normal level will vary from 1/2 full to just visible at the bottom of the glass.

2. Connect an adequately sized portable oil pump to oil sump drain valve, add oil from vented drum and insure absolutely no air enters the system.

3. Stop pump and close shut off valve when oil level in sump reaches 1/3 to 1/2 of (top) sight glass.

4. Disconnect pump and start-up PCX unit. If oil fails to return to sump causing shutdown due to loss of oil pressure, add additional oil and restart unit.

CAUTION: Do not overcharge system. System problems could result. Added oil must be removed once oil charge is returned to sump.

5. Shut down unit and observe sight glass after unit has stabilized. Drain off excess oil slowly.

IV. MAINTENANCE

E. TRANSFERRING/EVACUATING/CHARGING REFRIG.

CAUTION: All charging/evacuating procedures must only be performed by qualified commercial and industrial refrigeration personnel.

1. CHARGING/EVACUATING STATIONS

Adequate accessibility is provided on all packaged units for charging and evacuating. Careful consideration of the refrigerant state or quality must be employed before opening the valve for charging and evacuating procedures. Access may be obtained to the high and low side through:

- Dual pressure relief valve(s)
- Service shut-off valves (King, Queen Valve)
- Charging valves

CAUTION: Valve caps must be tightened when replacing to prevent refrigerant leakage.

1a. Dual Pressure Relief Valve

Vessels equipped with dual pressure relief valves enable service personnel to obtain access to the refrigerant vapor portion of the chiller or condenser.

FIG. 23 DUAL PRESSURE RELIEF VALVE

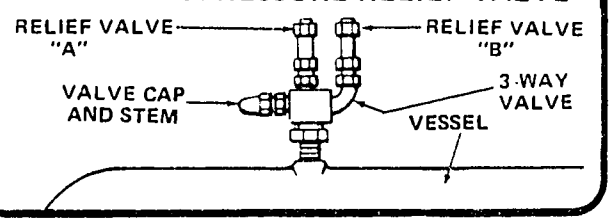

SP-4 *(Relief Valve Access)*

1. Isolate relief valve 'B' by closing off the three way valve stem clockwise until it seats. (See Figure 23)

2. Remove relief valve 'B'.

3. Install a charging hose adaptor in place of the removed relief valve.(adapter not supplied)

4. Connect one end of the hose to the adaptor insuring the hose is purged with refrigerant.

5. Return 3 way valve to original position and follow charging evacuating procedures.

1b. Service Valves

Service valves are located at the filter drier outlet (Queen Valve), and condenser outlet (King Valve) and may be used to obtain access for charging or transferring liquid refrigerant, and evacuating procedures.

SP-5 *(Service Valve Access)*

1. Backseat the valve to isolate plug tap from system.

2. Remove appropriate plug and attach hose.

3. Re-position valve stem and follow Charging/Evacuating Procedures as outlined in this manual

4. Backseat the valve and plug taps.

1c. Charging/Evacuating Valves

Units are equipped with charging valves located either on the suction line or directly on the compressor housing, as noted on the unit piping schematic.

SP-6 *(Charging Valve Access)*

1. Attach hose and purge by opening manual valve.

2 Follow Charging/Evacuating Procedures as outlined in this manual.

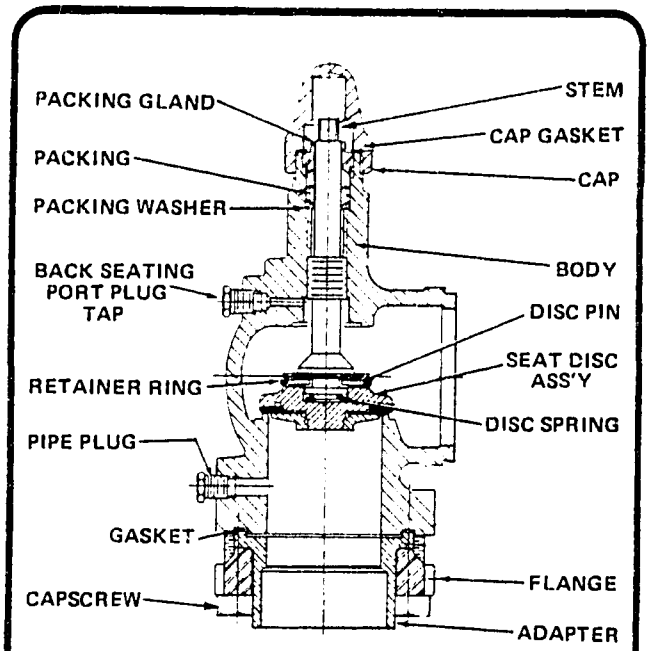

FIG. 24 TYPICAL SERVICE VALVE

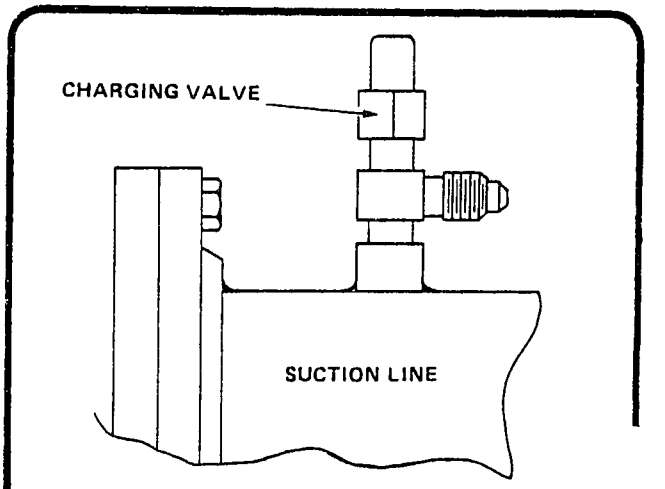

FIG. 25 TYPICAL CHARGING VALVE

2. TRANSFER (PUMPDOWN) OF REFRIGERANT TO CONDENSER OR EXTERNAL CONTAINERS

Most service work can be executed by isolating the component to be repaired, from the system. However, it may be required to pump and temporarily store the refrigerant in the condenser, or remove the charge completely. How the refrigerant is handled, is dependent upon equipment, time available, and the type of maintenance performed. The succeeding procedures SP-7 thru SP-11 must be executed in the order presented. The following must be adhered to for all transfer procedures:

CAUTION: Continuously weigh receiving container to be certain it is not filled more than 85% of its volumetric capacity to allow for thermal expansion.

NOTE: When removing refrigerant to external containers, it is recommended to pack the containers in dry ice.

2a. Partially Pumpdown System

Partially pumping down the system serves to transfer most of the refrigerant from the chiller to the condenser.

> **CAUTION:** Safety controls are not to be defeated or re-adjusted during pumpdown. Compressor motor starts are limited to 3 starts per hour.

SP-7 *(Partial Pumpdown)*

1. With the unit operating, and a partial load available, set the slide valve at minimum load position. Close the condenser shut-off valve (King Valve). If hot gas bypass is installed, close hot gas bypass manual valve recording number of turns.

2. After unit shuts down due to low pressure cut-out, restart unit after 20 minutes elapsed.

3. Unit will cycle off again on low pressure cut-out. The unit is now partially pumped down.

2b. Transfer Liquid Refrigerant From Chiller To Condenser or Containers (Flooded Type Chiller)

The remaining liquid refrigerant and residual oil must be transferred out of the chiller barrel before the gas is transferred.

> **CAUTION:** The chiller pressure must not go below the corresponding freezing point of water, or the brine being used. Approximately 65 to 75 psig (R-22) (448.2 to 517.1 kPa), should be maintained inside the vessel, until it is certain all liquid refrigerant has evaporated. Rapid removal of refrigerant will cause the chiller tubes to freeze and the possibility of bursting them exists. Rapidly boiling refrigerant also foams up the oil, which can freeze lower tubes.

NOTE: It may be helpful to monitor shell temperature beneath the chiller with a thermocouple. Another precaution (flooded chiller models) to avoid freezing is to remove the heads of the chiller and have the tubes fully blown out with compressed air, prior to refrigerant removal.

SP-8 *(Liquid Transfer, Flooded Chiller)*

1. Remove oil (refer to SP-1).

2. Connect a hose to the liquid connection at the bottom of the chiller vessel. Attach in line, a strainer, liquid refrigerant pump, and a sight glass.

3. Purge hose, and connect to the receiver (i.e. condenser, containers). Commence draining, maintaining pressure as much as possible until all the liquid is removed.

2c. Transfer Gas Refrigerant From Chiller To Condenser or Containers

SP-9 *(Gas Transfer From Chiller)*

1. Manually unseat the main expansion valve(s) and open hot gas bypass (if equipped) recording number of turns.

2. Connect the suction side of a portable condensing unit to the low (vapor) side of the system. Connect the discharge hose to the condenser vessel through the dual pressure relief valve (see SP-4) or to an external container.

3. Commence removal of the refrigerant until the suction pressure (chiller pressure) is slightly above atmospheric pressure.

2d. Transfer Liquid Refrigerant from Condenser to External Containers

SP-10 *(Transfer Liquid Refrigerant from Condenser)*

1. Connect a hose to the service valve at the condenser outlet. (See SP-5) Attach an in-line strainer, refrigerant pump and sight glass. Purge line and attach to a clean empty refrigerant container which is marked with the correct type of refrigerant.

2. Commence draining until the first cylinder is 85% full.

3. Remove container and repeat until all liquid refrigerant is removed, without dropping pressure below the corresponding freezing temperature of water.

2e. Transfer Gas Refrigerant From Condenser to External Containers.

SP-11 *(Transfer Gas Refrigerant from Condenser)*

1. Connect the suction side of a portable condensing unit through the condenser relief valve access. (See SP-4) Connect the discharge hose of the portable condensing unit to an external container.

2. Commence removal of refrigerant gas until the condenser vessel pressure is slightly above atmospheric pressure.

3. COMPLETE SYSTEM EVACUATION AND DEHYDRATION

For a complete system evacuation, it will be necessary to make up a manifold and evacuate from three evacuating stations simultaneously.

NOTE: It is absolutely necessary to use a true micron gauge. An ordinary compound gauge is not acceptable.

SP-12 *(Evacuation/Dehydration)*

1. Drain oil (refer to SP-1).

2. Transfer refrigerant to external containers (refer to SP-7 thru SP-11)

3. Pressure test the unit with dry nitrogen and R-22 to insure no leaks exist. (Refer to SP-37)

4. With the unit at atmospheric pressure, connect a vacuum pump to the system. Manually unseat the main expansion valve(s) and open hot gas bypass valve (if equipped).

5. Evacuate to 1,000 microns and break vacuum with dry nitrogen and R-22.

6. Change filter drier elements. (Refer to SP-29).

E. TRANSFERRING/EVACUATING/CHARGING REFRIG.

System Evacuation - continued

NOTE: To achieve best results, warm water or warm air should be recirculated through the water side of the evaporator and condenser.

7. System must be dehydrated down to 1,000 micron level at least three times, initially leaving vacuum pump on system at least 12 hours. Break vacuum twice with dry nitrogen. On final pull down to 1,000 microns, or lower, system pressure must not rise above 2,000 microns in four hours with vacuum pump isolated from system.

8. Fill oil sump with clean oil after third pull down utilizing the partial vacuum to draw in the oil. (Refer to SP-2)

9. Turn on oil heaters upon completion of dehydration. Break vacuum with dry refrigerant vapor.

4. CHARGING THE REFRIGERANT SYSTEM

When charging a fully evacuated system, the unit must be 1) gas charged initially, 2) liquid charged to 90% of design charge capacity and 3) charged under operation to full design charge capacity, as noted on the nameplate located at the control panel.

4a. Initial Gas Charging the Refrigerant System

NOTE: This is the initial procedure for charging a fully evacuated system, with the oil at the proper level.

CAUTION: Refrigerant gas must be charged until the internal system pressure corresponds to an evaporating temperature above freezing (R-22, 70 PSIG) (482.6 kPa), before liquid is charged. This will prevent freeze-up and bursting of tubes.

CAUTION: Chiller and condenser water pumps must be running and must maintain a minimum of 50% water flow.

SP-13 *(Initial Gas Charging)*

1. Manually unseat the main thermal expansion valve(s)

2. Slowly gas charge (2 PSI/minute) (13.79 kPa/min) at:
   a. Condenser vessel
   b. Chiller vessel

3. Continue gas charging until the pressure is stable throughout the system at a safe level. (R-22: 70 PSIG 482.6 kPa).

4b. Liquid Charging the Refrigerant System

NOTE. This procedure is for charging a unit that has a system pressure above the corresponding freezing temperature of water. Liquid refrigerant can be charged directly into an evacuated system only if water is drained thoroughly and the tubes (flooded chiller) or the shell (direct expansion chiller) have been fully blown out with compressed air.

CAUTION: Chiller and condenser water pumps must be running and must maintain a minimum of 50% water flow.

SP-14 (Liquid Charging the System)

1. Purge and connect a charging hose from refrigerant containers to the King valve (refer to SP-5).

2. Liquid charge condenser, exchanging containers until 90% of design charge is in the system. A liquid refrigerant pump may be employed. Insure a liquid seal exists in the liquid line to the thermal expansion valve(s) by observing the sight glass.

3. The remaining refrigerant must be charged while the system is operating (refer to SP-15).

4c. Adding to Refrigerant Charge

This procedure is used when an inadequate charge is suspected. Typical indications of an inadequate charge are bubbles in sight glasses (vaporized refrigerant), high suction pressure, high oil temperature, etc. Indications of an adequate charge at 100% load are:

- Discharge Superheat - Must maintain between 25°F (13.9°C) and 30°F (16.7°C) above saturated conditions.
- Refrigerant Quality - Moisture indicator sight glasses should be clear of bubbles when system is fully charged.
- Condenser Outlet Temperature (Subcooling) - System will maintain approximately 8°F to 10°F (4.4°C to 5.6°C) below saturated conditions when refrigerant charge is adequate.
- Oil Temperature (Water Cooled Oil Cooler, if equipped) - Oil temperature must be maintained at 110°F to 120°F (61.1°C to 66.7°C) entering compressor.
- Liquid Injection Feed (if equipped) - Liquid seal exists in feed line at sight glass.

  NOTE: It may be helpful to liquid charge the liquid injection line independently to initiate normal operation.

- Seal Oil Cooler Feed (Direct Drive Models) - Liquid seal exists in feed line entering cooler.

  NOTE: It may be helpful to liquid charge the feed line to the seal oil cooler independently to initiate normal operation.

SP-15 *(Adding to Refrigerant Charge)*

1. Manually set and hold compressor slide valve at 25% position using temperature load control (TLC) manual control selection switch.

CAUTION: Partial cooling load must be available to manually position slide valve to prevent shut-down from safety controls.

2. Connect container of the design refrigerant to the low side of the system.

3. Start-up PCX unit, open drum, valve and gas charge system until above conditions are met.

IV. MAINTENANCE

F. COMPONENT MAINTENANCE

1. COMPRESSOR/MOTOR ASSEMBLY

1a. Compressor

All inspection, maintenance, or repairs of the compressor must be done by an authorized, qualified Dunham-Bush, Inc. Service Representative as listed in the latest edition of Form Number 9822. If the customer has any reason to suspect a problem, he should contact the Dunham-Bush Service Representative for assistance. Failure to comply may jeopardize the warranty. Repair information may be found in the latest edition of the DBX Compressor Service Manual, Form No. 6136.

1b. Compressor Motor

The primary maintenance required on the hermetic compressor motor is to perform an insulation resistance test at periodic intervals. A permanent record of the megger test will serve to show any approaching motor problems. (Refer to SP-36) Direct drive motors must be lubricated per manufacturer's specifications and periodic insulation resistance tests are also recommended.

1c. Coupling Alignment

Shafts become misaligned as a result of many natural and unavoidable causes. Heat, vibration, bearing wear, the settling of foundations, etc., all tend to alter alignment. Periodic checks of the compressor coupling is recommended.

NOTE: The coupling should be hot when making alignment adjustments. Also the motor should be aligned to the compressor.

SP-16 *(Compressor Coupling Alignment)*

1. To check angular misalignment (Figure B) mount indicator (as shown on left flange) with stem on face of right flange. Rotate Equipment noting maximum and minimum indicator reading. Move equipment as necessary to reduce the total indicator reading to that shown below.

2. To check parallel misalignment (Figure C) set indicator stem on outer surface of flange. Rotate equipment noting maximum and minimum indicator reading. Move equipment as necessary to reduce indicator reading to that shown below. Be careful not to disturb the setting of Step 1.

NOTE: If it is necessary to remove the motor alignment pins, the motor should be repinned after the alignment corrections are made.

3. Repeat Steps 1 and 2 as necessary.

4. Coupling hubs to be spaced to dimension C, as shown in the table below.

5. This coupling should be rotated several revolutions to make sure no "endwise creep" in connected shafts is measured.

6. Tighten all bolts as shown in chart below.

7. When operating at full speed,both laminated rings should have a distinct and clearly defined appearance - not blurred when viewed from top and side.

1d. Motor Housing Heaters (Hermetic Units)

No maintenance is required on compressor housing heaters, except for replacement, if the heater element should fail.The heater may be removed from the housing, or well without disturbing the charge. There are two types of compressor housing heaters. The housing mounted type (heater pad) which requires a temperature resistant epoxy for installation, and a well type (insertion) which requires no other agent for assembly. All electrical service connections must be disengaged prior to installation. Refer to the unit wiring diagram.

FIG. 25 - COUPLING ALIGNMENT

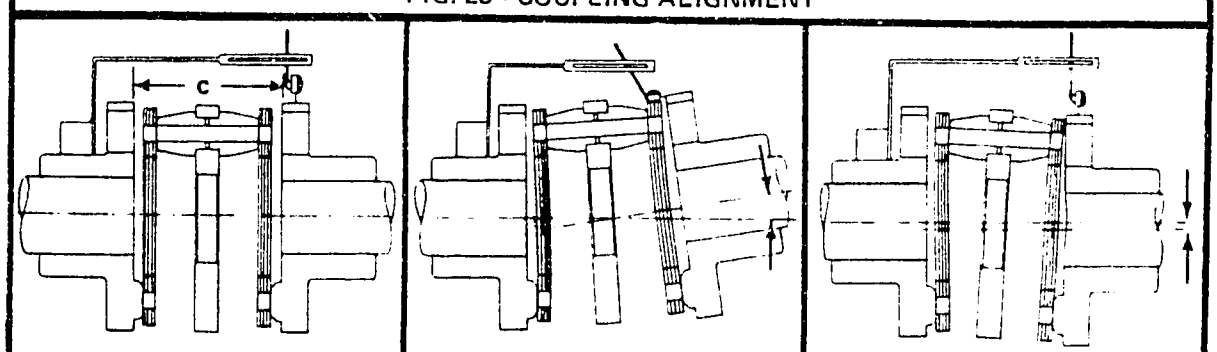

FIGURE 25A
COUPLING IN ALIGNMENT

FIGURE 25B
TEST FOR ANGULAR MISALIGNMENT

FIGURE 25C
TEST FOR PARALLEL MISALIGNMENT

THOMAS COUPLING SERIES	FORM-FLEX COUPLING SERIES	BOLT TORQUE				MISALIGNMENT (TIR)				DIMENSION C (SEE FIG. A)	
		THOMAS		FORM-FLEX		PARALLEL		ANGULAR			
		(Ft.-Lb.)	(kg-m)	(Ft.-Lb.)	(kg-m)	(In)	(mm)	(In)	(mm)	(In)	(cm)
163 DBZ-B	-	13	1.8	-	-	0.003	0.076	0.003	0.076	2 7/16	6.19
201 DBZ-B	-	25	3.5	-	-	0.005	0.127	0.005	0.127	2 15/16	7.46
226 DBZ-B	AK 30	43	6.0	40	5.5	0.005	0.127	0.005	0.127	3 13/16	9.68
263 DBZ-B	AK 35	63	8.7	40	5.5	0.007	0.178	0.007	0.178	4 5/16	11.0
301 DBZ-B	AK 40	95	13.1	80	11.1	0.007	0.178	0.007	0.178	4 7/8	12.38
351 DBZ-B	AK 45	175	24.2	80	11.1	0.007	0.178	0.007	0.178	5 7/8	14.90
350 - 51	-	95	13.1	-	-	0.007	0.178	0.007	0.178	6	15.24

1. Consult factory for complete engineering specification ASY-ES-1 , if additional information is required.
2. TIR = Total Indicator Reading.
3. Compressor alignment data is subject to periodic change. Consult latest National Service Bullentin SR-109.

2. OIL SYSTEM COMPONENT MAINTENANCE

2a. Oil Filter Replacement

The need for replacement of the oil filter may be determined by measuring the pressure drop across the filter (6 psid [41.4 kPa] maximum). The normal pressure drop with a new element is 1 to 2 psid (6.9 to 13.8 kPa). Some units are equipped with an indicator for ths purpose.

FIG. 26 HORIZONTAL TYPE OIL FILTER

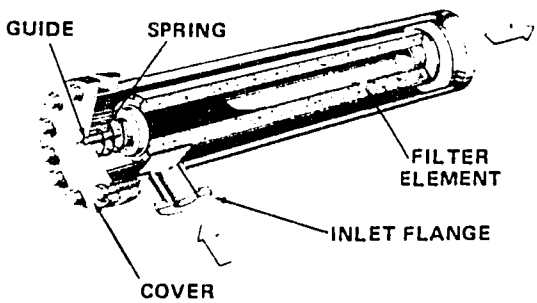

P-17 *(Oil Filter Replacement)*

1. With the unit off, close the oil filter service valves at the inlet and outlet sides of the oil filter assembly to be serviced.

2. Vent filter housing into a gallon (3.8 liters) container. Oil will foam up.

3. Remove cover (enclosure; vertical type), by evenly backing out the bolts.

NOTE: Do not cock cover (enclosure). Spring is in compression with the filter elements.

4. Remove filter element guide. Remove and inspect oil filter cartridge for metallic particles, babbitt or unusual amounts of dirt or sludge. Remove old gaskets (O-Ring).

5. Clean interior of oil filter housing with a lint free wiping cloth.

6. Inspect new oil filter element to ensure that the element is free from damage, and install new oil filter element. Ensure that the element is seated properly.

7. Install cover (enclosure) with new gasket or "O" Ring if necessary. Torque bolts evenly.

8. Purge oil filter thoroughly and open isolation shut off valves.

9. With unit operating, test for any leakage.

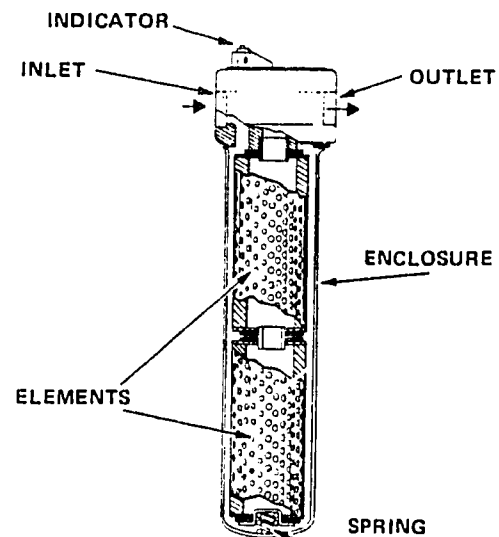

FIG. 27 VERTICAL TYPE OIL FILTER

2b. Oil Pump/Motor Assembly

The oil pump, whether direct drive or hermetically sealed are designed for long trouble free life, with a minimum of maintenance.

Hermetic pump applications require oil sump draining to obtain access to the pump assembly. External pumps may be serviced in-line. Anticipated maintenance for the pump assembly are:

- End Clearance Adjustment
- Motor coupling alignment (direct drive oil pump)
- Oil pump suction strainer cleaning

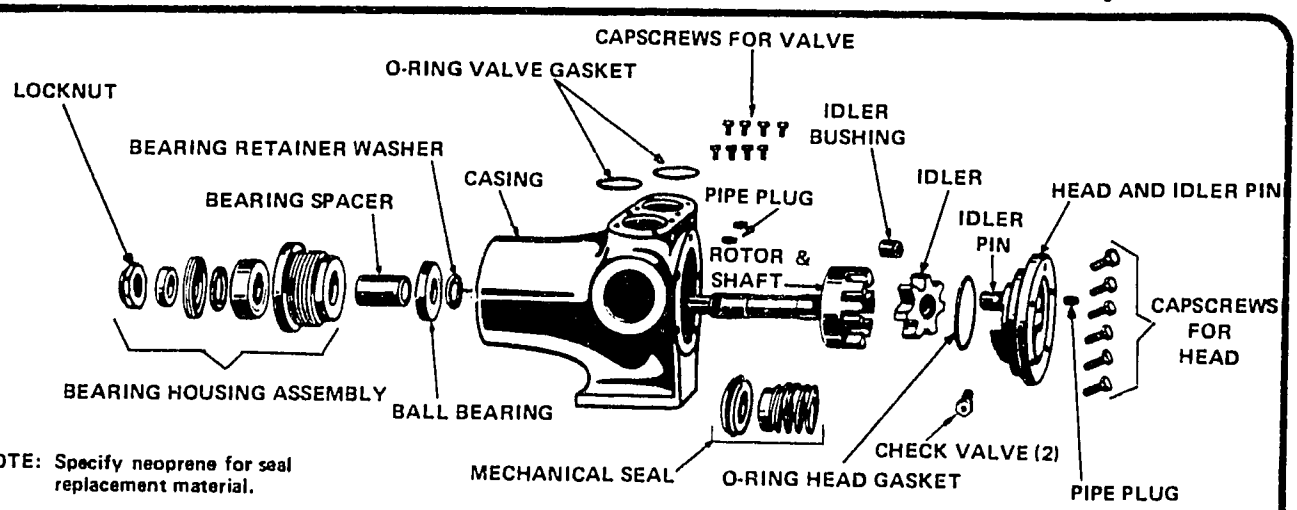

NOTE: Specify neoprene for seal replacement material.

FIG. 28 TYPICAL EXTERNAL TYPE OIL PUMP

F. COMPONENT MAINTENANCE CONTINUED

SP-18 *(Coupling Alignment, Direct Drive Oil Pump)*

1. *Disconnect electrical service*

2. *Check parallel alignment by placing a straight-edge across the two coupling flanges and measuring the maximum offset at various points around the periphery of the coupling. Do not rotate the coupling. If the maximum offset exceeds the figure shown under parallel, realign the coupling.*

3. *Check angular alignment with a micrometer or caliper. Measure from the outside of one flange to the outside of the other at intervals around the periphery of the coupling. Determine the maximum and minimum dimensions. Do not rotate the coupling, the difference between the maximum and minimum must not exceed the figure given under "angular". If a correction is necessary, be sure to recheck the parallel alignment.*

NOTE: For maximum life, keep misalignment values as near to zero as possible.

NET MAX. ALIGNMENT VALUES (EXTERNAL OIL PUMP)				
(Type N) Sleeve Size	Parallel		Angular	
	In.	cm	In.	cm
6	0.015	0.038	0.070	0.178
7	0.020	0.051	0.081	0.206
8	0.020	0.051	0.094	0.239
9	0.025	0.064	0.109	0.277

SP-19 *(End Clearance Adjustment, Direct Drive Oil Pump)*

1. *Disconnect electrical service to oil pump.*

2. *Loosen set screws on bearing housing.*

3. *Counterclockwise rotation of the bearing housing will increase end clearance. Two notches on the bearing housing represent approximately 0.003 in. (0.076mm).*

CAUTION: Be sure the shaft can be rotated freely and the set screws are tightened securely.

4. *Align coupling and reconnect electrical service.*

SP-20 *(Maintenance, Hermetic Oil Pump)*

1. *Partially pumpdown unit. (Refer to SP-7)*

2. *Drain oil from oil sump housing into 55 gallon (208.2 liters) container. (Refer to SP-1)*

3. *Disconnect all electrical connections and properly tag.*

4. *Attach a calibrated pressure gauge to both high and low side to determine if the check valve has properly seated.*

5. *With sump at atmospheric pressure, remove the oil pump assembly. With sump/separator assemblies, remove separator mesh and clean with R-11. Inspect for damage and wear. Replace if required.*

6. *Remove motor rotor, inspect rotor and stator for wear marks. Inspect bearings for wear. If any wearing is evident, repair/replace pump assembly.*

7. *If original pump assembly is to be replaced, check rotor end clearance and insure clearance is to 0.002 to 0.003 in. (0.051 to 0.076 mm).*

8. *Assemble new or cleaned oil pump strainer to pump assembly using the existing connector tube assembly and attaching hardware, install pump assembly and O-ring using lifting eye bolt. Care should be taken to prevent damaging pump strainer. Use of two guide pins to support pump on its flange will aid in assembly.*

9. *Reconnect piping and electrical connections. Fill oil sump (refer to SP-2 and SP-3).*

FIG. 29 TYPICAL HERMETIC TYPE OIL PUMP

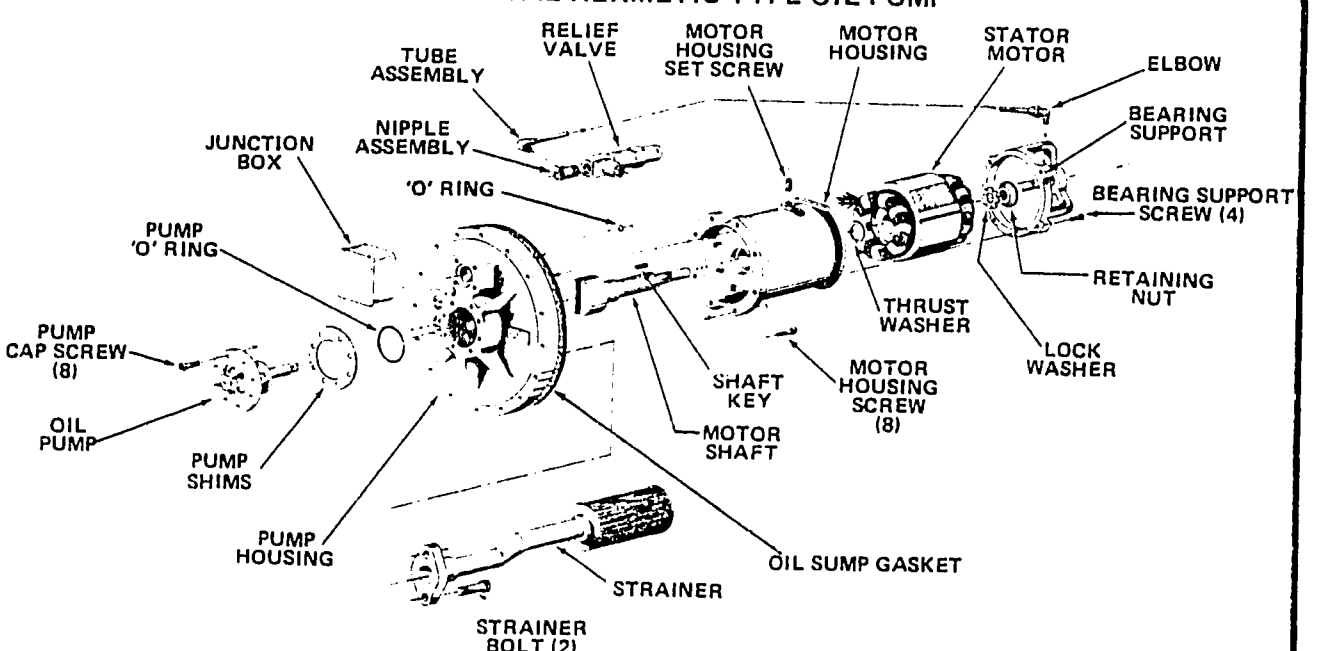

F. COMPONENT MAINTENANCE CONTINUED

2c. Oil Pressure Relief Valve

CAUTION: Problems seeming to require oil pressure relief valve adjustments can usually be traced to other items, such as plugged oil filters, worn pump, improper pump end clearance, a plugged or dirty seat, and/or a damaged seat.

- **Hermetic Type** - The hermetic type oil pressure relief valve is factory pre-set to crack open at 54 PSIG (372.3 kPa) pressure at the compressor, 100% load .

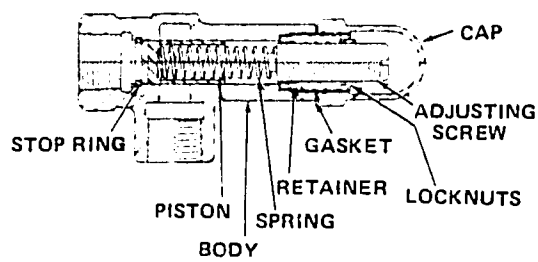

FIG. 30 TYPICAL HERMETICALLY LOCATED PRESSURE RELIEF VALVE

- **External Type** - The external type in-line oil pressure regulating valve is factory set to crack at 35 to 42 psig (241.3 to 289.6 kPa) (pressure at compressor, 100% load).

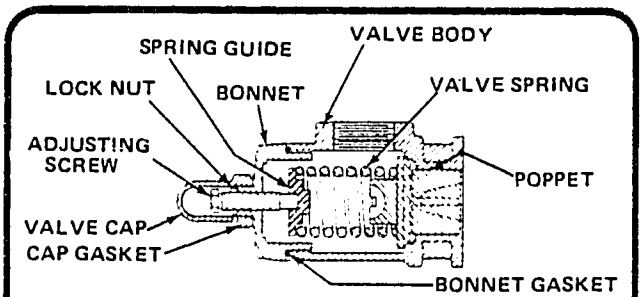

FIG. 31 TYPICAL EXTERNALLY LOCATED PRESSURE RELIEF VALVE

SP-21 *(Oil Pressure Relief Valve Adjustment)*

1. Remove the valve cap which covers the adjusting screw, and loosen the locknut(s), which locks the adjusting screw so the pressure setting will not change.

2. The adjusting screw should be turned in for increasing the pressure that the relief valve will open.

3. Adjust to design conditions.

SP-22 *(Oil Pressure Relief Valve Disassembly)*

1. Remove valve cap.

2. Measure and record length of extension of the adjusting screw.

3. Loosen the locknut(s) and back out adjusting screw until spring pressure is released.

4. Remove part components, clean and inspect for wear or damage. Repair or replace as necessary.

2d. Oil Sump Heaters

No maintenance is required on oil sump heaters, except for replacement, if the heater element should fail. The heater may be removed from its well without disturbing the oil or charge.

SP-23 *(Replacement of Oil Sump Heaters)*

1. With the power off, disconnect electrical cable and wiring.

2. Remove the oil sump heater element from the oil sump flange.

3. Install new oil sump heater element to the oil sump well.

4. Reconnect wiring and electrical cable.

2e. Evaporator Oil Return (Flooded Chiller, Low Temp. Direct Expansion Chiller)

The jet pump oil return taps on the chiller vessel are factory pre-set to design conditions. However re-adjustment may be needed after installation.

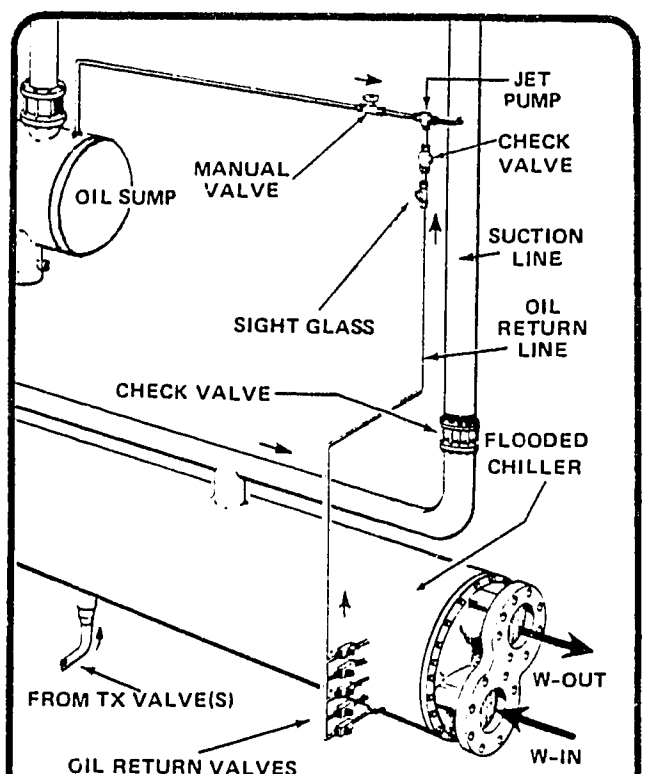

FIG. 32 TYPICAL EVAPORATOR OIL RETURN

- **Adjustment (Flooded Type)** - Once the maximum and minimum liquid refrgerant levels are established, adjustment may be made. All dip tubes that are within the liquid operating range are to remain fully open. All dip tubes that are never exposed to liquid refrigerant are to remain closed, to prevent capacity reduction. If extended pulldown is anticipated, the lowest dip tube should remain fully open.

- **Adjustment (Direct Expansion Type)** - Valve is to remain fully open on dip tube.

3. OIL COOLING SYSTEM MAINTENANCE

3a. Liquid Injection Oil Cooling System

FIG. 33 TYPICAL LIQUID INJECTION OIL COOLING SCHEMATIC

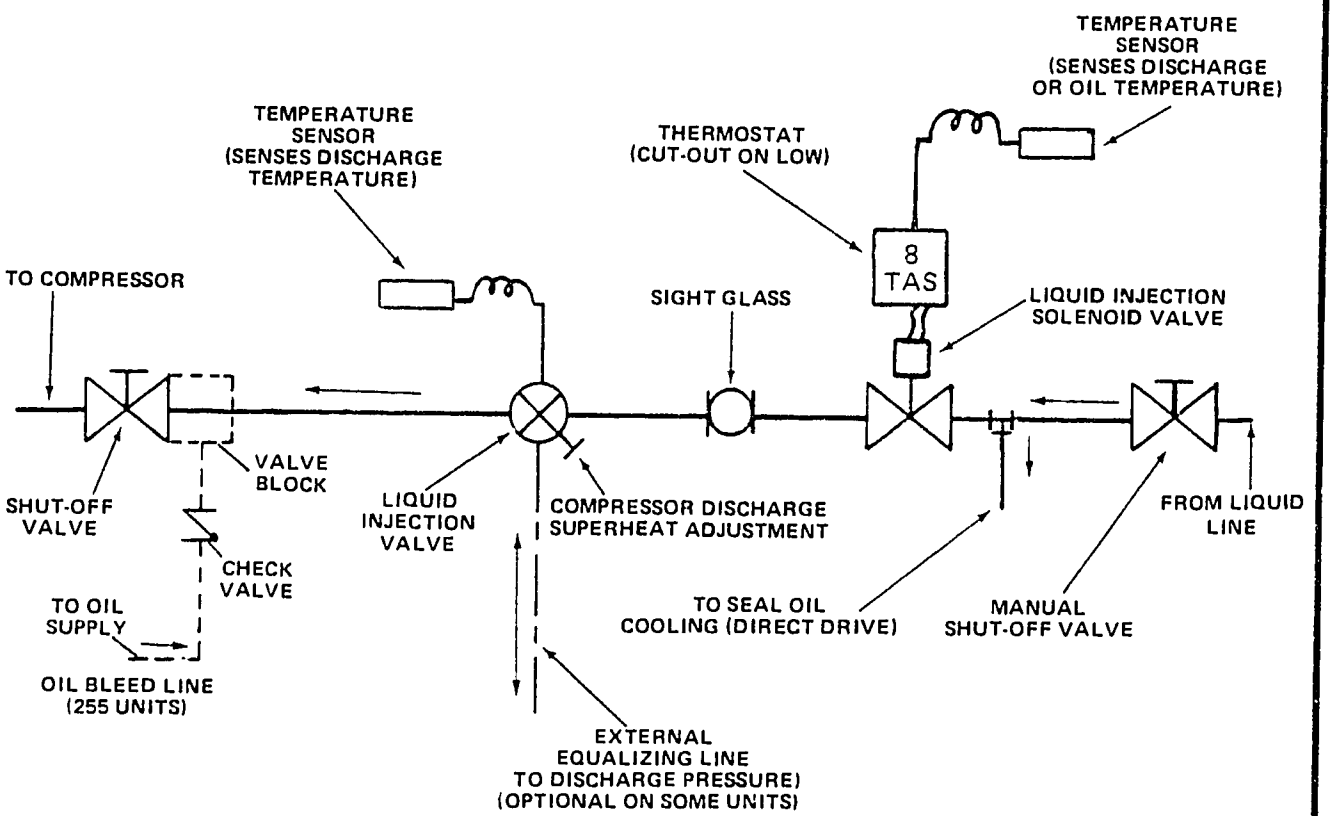

- **Normal Operation** - This system is designed to hold the oil temperature to the compressor inside the 135°F to 200°F (57°C to 93°C) range under all conditions of operation. This is done by a combination of controls. The liquid injection valve is factory adjusted to provide 40°F to 50°F (22°C to 28°C) discharge superheat at 100% load and design head pressure. That is the discharge temperature that will be controlled at 40°F to 50°F (22°C to 28°C) above saturated discharge temperature.

EXAMPLE: At 105°F (41°C) condensing temperature and 100% load, the discharge temperature will be controlled at 145°F to 155°F (63°C to 68°C) at 100% load. At 115°F (46°C) condensing temperature the discharge temperature will be controlled at 155°F to 165°F (68°C to 74°C) at 100% load.

At low loads, the superheat provided by the liquid injection valve will decline to approximately 25°F (14°C) and in the usual system the head pressure will also rebalance lower.

EXAMPLE: 10% load, 90°F (32°C) C.T. the liquid injection valve will control at 115°F (46°C). It is preferable to maintain a higher value to prevent oil dilution, so under these conditions, the thermostat will cycle the solenoid valve to maintain 140°F ± 5°F (60°C ± 3°C) oil temperature.

> **CAUTION:** The thermostat setting should not be altered in the field. If the unit is stopped by the thermostat, the cause should be determined and corrected.

- **Abnormal Operation** - If the liquid injection valve fails in the closed position the unit will cycle off on the oil temperature thermostat, or the oil pump motor thermostats (or hermetic motor inherent protector, where applicable). If the liquid injection valve fails in the open position, the thermostat and solenoid will take over control until the liquid injection valve can be repaired.

- **Settings** - Thermostat: As noted on the unit job wiring diagram. TX Valve: Adjusted to maintain 40°F to 50°F (22°C to 28°C) above saturated discharge temperature (100% load, design conditions) minimum.

NOTE: Heat transfer paste must be used in the bulbwell.

514

F. COMPONENT MAINTENANCE CONTINUED

3b. Water Cooled Oil Coolers

The water cooled oil coolers require periodic cleaning of the water side to assure maximum efficiency. It is recommended that the tubes are cleaned out at the same time that the condenser is cleaned. (Refer to Condenser Maintenance)

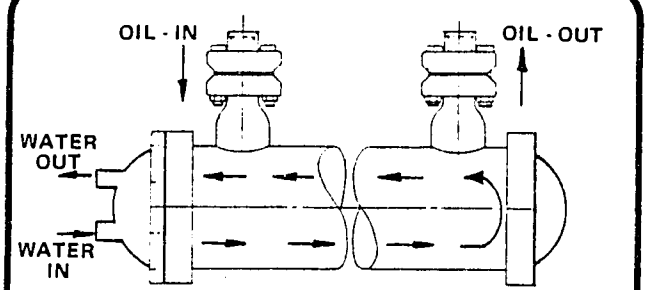

FIG. 34 TYPICAL TWO-PASS WATER COOLED OIL COOLER

- **Oil Cooler Water Regulating Valve** - These valves are factory adjusted but may require periodic re-adjustment if too high an oil temperature occurs that is not attributed to oil cooler fouling or oil pump problems. This valve should also be flushed out when the oil cooler is cleaned.

SP-24 *(Oil Cooler Water Regulating Valve Adjustment)*

1. To raise the temperature opening point, turn adjusting screw counterclock wise; to lower the temperature opening point, turn adjusting screw clockwise.

NOTE: Temperature closing point of valve is non-adjustable. Temperature actuated valves close approximately 3°F to 5°F (1.7°C to 2.8°C) below opening point.

SP-25 *(Oil Cooler Water Regulating Valve Flushing)*

1. Lift range spring follower with screwdrivers at two sides of lower spring cap to open valve.

2. Backflush oil cooler, holding valve open (this procedure should not affect valve adjustment).

3c. Seal Oil Cooler System (Direct Drive Models)

> CAUTION: The thermostat setting should not be altered in the field. If the unit is stopped by the thermostat, the cause should be determined and corrected.

- **Normal Operation** - This system is designed to hold the temperature of the oil being pumped to the seal to 115°F ± 5°F (46°C ± 3°C), under all conditions of operation by adjustment of its thermal expansion valve.

- **Abnormal Operation** - If the temperature operated expansion valve fails in the closed position, the unit will cycle off from the oil temperature thermostat, which senses the oil temperature out of the seal oil cooler. If the temperature operated expansion valve fails in the open position, the heat exchanger may flood through and the oil will be overcooled. The seal oil cooling system in conjunction with the liquid injection system will not perform properly if flashing liquid is supplied to the expansion valves.

- **Settings** - Thermostat: 130°F (54.4°C) cut out, 127°F (52.8°C) cut in. Temperature operated expansion valve: 115°F ± 5°F (46.1°C ± 2.7°C) oil temperature at bulbwell.

SP-26 *(Seal Oil Temperature Adjustment)*

NOTE: When adjusting the temperature setting on the thermal expansion valve to maintain seal oil temperature time must be allowed for the system to react and stabilize before further adjustment.

1. With a thermo-couple properly insulated and orientated at the thermal expansion valve bulbwell (on oil line) monitor the oil temperature.

2. Clockwise rotation of the temperature adjustment will lower oil temperature. Adjust accordingly.

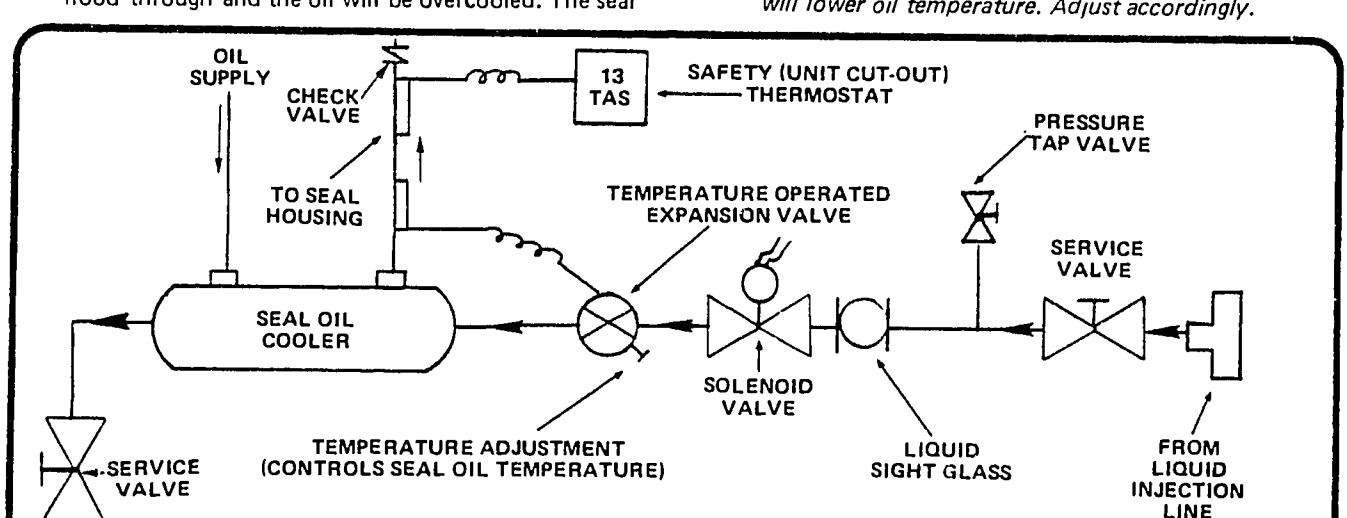

FIG. 35 TYPICAL SEAL OIL COOLING (DIRECT DRIVE)

4. HIGH/LOW SIDE COMPONENT MAINTENANCE

4a. Condenser Cleaning

To assure optimum efficiency, the condenser water tubes should be cleaned of scale, sludge, and slime deposits. Individual water conditions will determine how often the tubes are cleaned. One indication of tube fouling, is rising condensing pressures not attributed to air or other causes. There are two methods of tube cleaning.

1. Mechanical - Using brushes to remove loose material deposits.

2. Chemical - Flushing solvent to remove scale deposits.

NOTE: It is recommended that only a reputable professional chemical cleaning organization be used for the cleaning of the condenser. Damage could result to the heat exchanger from the use of an improper, solution or from exposure for too long a period.

SP-27 *(Mechanical Cleaning of Condenser)*

NOTE: Head gaskets need not be renewed after each head disassembly operation. Gasket must be replaced if it is physically disfigured or otherwise deteriorated.

1. Isolate water side of condenser, vent, drain and remove heads.

2. Remove loose material which has settled in the tubing with brushes. Flush thoroughly with fresh water, drain and restore heads and piping to vessel, torquing nuts evenly. Insure no entrapped air exists by venting high points of water system.

4b. Condenser Tube Plugging

Plugging has long since been accepted as standard service procedure. A maximum 5% of the total number of tubes may be plugged. The recommended method of repair can be performed without pumping out the refrigerant if due care is exercised.

SP-28 *(Tube Plugging)*

1. With unit off, shut down the condenser water flow.

2. Drain condenser water supply and return piping and remove both heads.

3. Conduct leak test (refer to SP-37)

4. Drill and tap tube sheet for 1/2 inch pipe plug or tapered plug and plug accordingly.

5. Install heads, with new gaskets if required. Connect water piping and fill condenser water supply.

6. Start pump and vent water system of entrapped air at high points of piping, and at vessel heads.

7. Add to refrigerant charge if necessary. (Refer to SP-15)

8. Check moisture indicators for evidence of water and change filter drier elements if necessary.

- **Condenser Relief Valves** - The condenser relief valve is adjusted and sealed at the factory. No maintenance is anticipated. However, if the relief valves do blow off at the design pre-set pressure, the cause should be determined and the relief valves should be replaced if they do not properly re-seat.

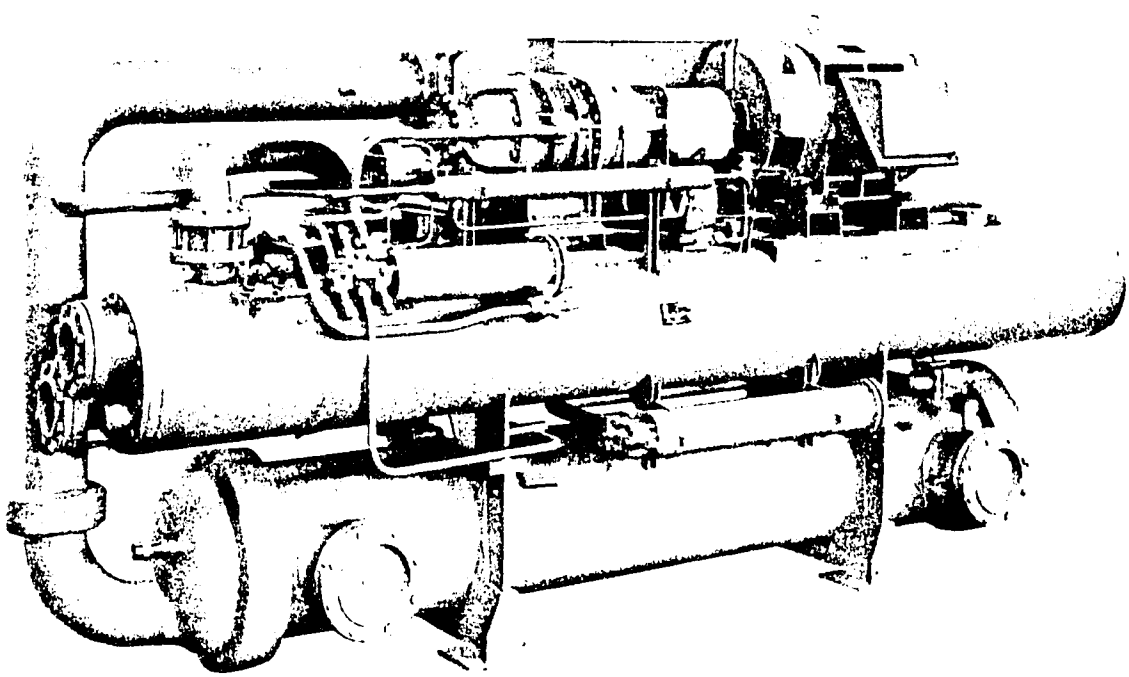

PCX-O DIRECT DRIVE PACKAGED CHILLER

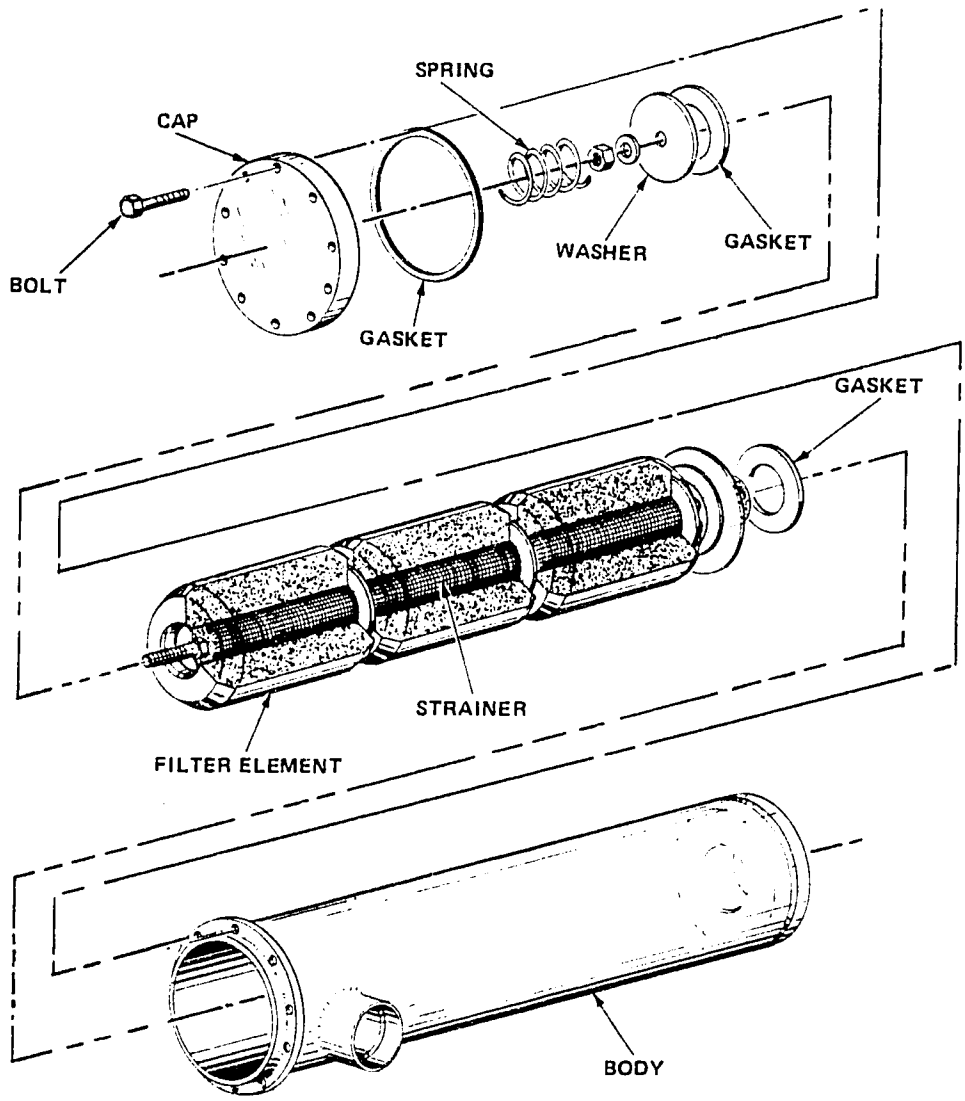

FIG. 37 TYPICAL REFRIGERANT FILTER DRIER

4c. Filter Drier Replacement

The filter drier elements should be replaced at scheduled intervals, when a specific maintenance action requires, or when moisture is evident in the system. The maximum operational pressure drop across the filter drier is 5 PSI (34.5kPa).

SP-29 *(Filter Drier Replacement)*

1. Partially pumpdown system (Refer to SP-7)

2. Close both manual shut-off valves to isolate the filter drier.

3. Slowly vent enclosure to atmospheric pressure by opening plug.

4. Disassemble the drier assembly, discarding the cartridge elements and gaskets. Remove bolts evenly as spring is in compression to flanged cover.

5. Clean the housing and internal parts thoroughly. Inspect for damaged or deteriorated parts. Replace as needed.

6. Assemble the filter drier and torque bolts evenly.

7. Purge drier assembly and open isolation valves.

8. With the unit operating, check for leaks with a leak tester.

Once every two years, an inspection of the chiller tubes should be made, and the tubes cleaned if necessary. (flooded chiller models, clean inside tubes; direct expansion chiller models, clean outside of tubes).

4d. Cleaning Chiller

Because the chiller water or brine is a closed system, less frequent cleaning of the chiller tubes is required.

4d. Cleaning Chiller - continued

NOTE: It is recommended that only a reputable professional chemical cleaning organization be used for the cleaning of the chiller. Damage could result to the heat exchanger from the use of an improper solution, or from exposure for too long a period.

- **Chiller relief valve(s)** - The chiller relief valve is adjusted and sealed at the factory, no maintenance is anticipated. However, if the relief valve does blow-off at the design pre-set pressure, the cause should be determined and the relief valve should be replaced if it does not properly re-seat.

4e. Brine Maintenance

The chiller cooling medium must be periodically checked and maintained at design percent concentration, for a freeze point at least 10°F (6°C) below minimum saturated evaporator temperature. The actual freeze point may be determined by obtaining the specific gravity (with a hydrometer) and the temperature of the brine. With this data obtained, the percent concentration and freeze point may be determined from curves available from the brine manufacturer.

> WARNING The factory is not responsible for damage due to chiller freeze-up as a result of negligent periodic maintenance of brines.

- **Chloride Brines** - In addition to proper freeze point, chloride brines require special precautions. A rust inhibitor must be used in adequate quantity and the brine PH must be checked and adjusted periodically to prevent potential chiller corrosion. Brine PH must be maintained between 7.5 and 8.0 and must be adjusted before filling chiller.

NOTE: Consult brine manufacturer or a professional agency for mixing the solution, adjusting PH, and proportioning the rust inhibitor.

4f. Pilot Thermo Valve

The pilot thermo valve is located on a branch liquid line and is used in conjunction with the pilot operated solenoid thermal expansion valve. The pilot thermo valve is factory pre-set to maintain 10°F to 15°F (5.6°C to 8.3°C) superheat (direct expansion chillers) or 0 to 5°F (0 to 2.8°C) superheat (flooded chillers). Superheat is the temperature increase of the refrigerant gas above the saturation temperature at the existing pressure. The superheat setting can be re-adjusted, if required, to improve system performance.

- **Pressure and Temperature Measurement** - The suction gas temperature should be measured on the suction line at the pilot thermo valve bulbwell and must be insulated from ambient air temperature. Units that locate the bulb in the leaving chilled water or brine flange require temperature measurement on the suction line halfway up the vertical riser on the side of the pipe.

> CAUTION: The orientation of the thermocouple is critical for temperature measurement. Do not locate the thermocouple on any elbows.

The pressure may be measured by installing a calibrated gage at a gage connection closest to the temperature measurement. Both pressure and temperature measurements must be taken either upstream or downstream of the check valve.

SP-30 *(Superheat Adjustment)*

1. To increase superheat (decreases flow and reduces suction pressure), turn adjustment screw clockwise two full turns. Allow time for the system to react.

NOTE: As measured superheat decreases with a partial load, these adjustments should be made at 60% load or above. (With a dual pilot thermo valve arrangement, the load must be manipulated for each setting.)

2. Observe for increased superheat; adjust accordingly until design superheat is obtained.

- **Maintenance** - The only maintenance required for the pilot thermo valve is inspection, cleaning or replacing the cage assembly, and/or replacing the power assembly.

SP-31 *(Thermo-Expansion Valve Dissasembly)*

NOTE: The liquid line must be at atmospheric pressure before disassembly.

1. Remove the two cap screws, lift off the power assembly and remove the cage assembly.

2. Compress the cage spring to inspect pin and seat. If either are worn or eroded, replace cage assembly.

3. Check power assembly by pressing finger against buffer plate; replace assembly if plate is easy to move or depress.

> CAUTION: Be sure all three gaskets are replaced in their proper places on the cage; that the two lugs on the cage assembly feed into their grooves in the power assembly; and that valve parts are not forced together.

FIG. 40 TYPICAL PILOT THERMO VALVE

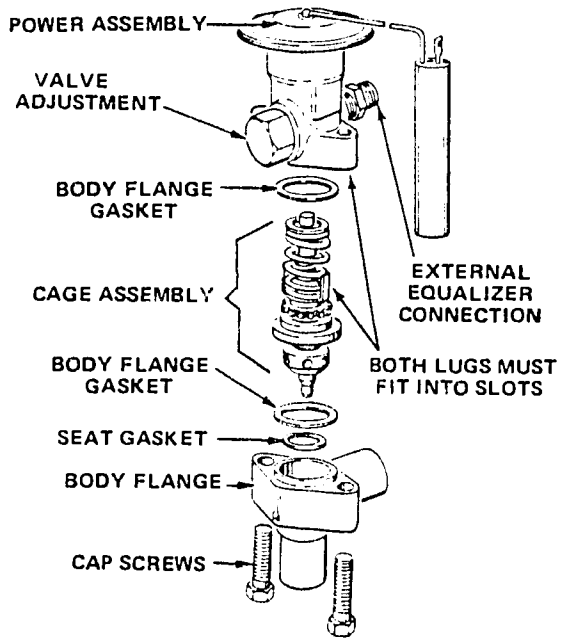

4g. Pilot Operated Solenoid Thermal Expansion Valve(s) (Main)

No adjustment of the pilot operated solenoid TX valve is necessary. This valve may be manually unseated by turning the manual opening stem beneath the seal cap on the top of the valve in a clockwise direction, until a stop position is reached.

NOTE: Always return the manual stem to the original position before starting the unit.

- **Maintenance**

NOTE: The most expedient method for inspection, cleaning or replacing parts would be to repair them in place.

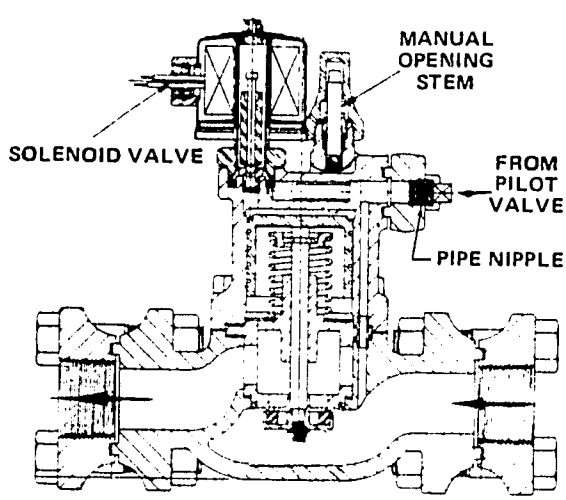

FIG. 41 TYPICAL P.O.S. THERMAL EXPANSION VALVE

SP-32 *(Disassembly/Maintenance P.O.S. Valve)*

1. *Remove the solenoid coil.*
2. *Remove four cap screws, lift off upper body. Remove piston, inspect piston, rings, cylinder wall; check for free movement of piston in cylinder; wipe clean, oil all surfaces. Clean bleed port in top of piston.*
3. *Remove cage assembly, compress cage spring and examine valve disc, restrictor plug and seat; replace cage assembly if valve disc or seat are cut or eroded.*
4. *Re-assemble, insert cage with gaskets. Carefully place piston with rings in upper body. Re-assemble unit and tighten cap screws evenly. Replace pilot line connection, test for leaks and re-install.*
5. *Take apart the solenoid valve assembly. Check seat for wear, dirt, rust, etc. Replace if required.*

TYPICAL THROTTLING ARRANGEMENT (1) PILOT, (1) MAIN EXPANSION VALVE

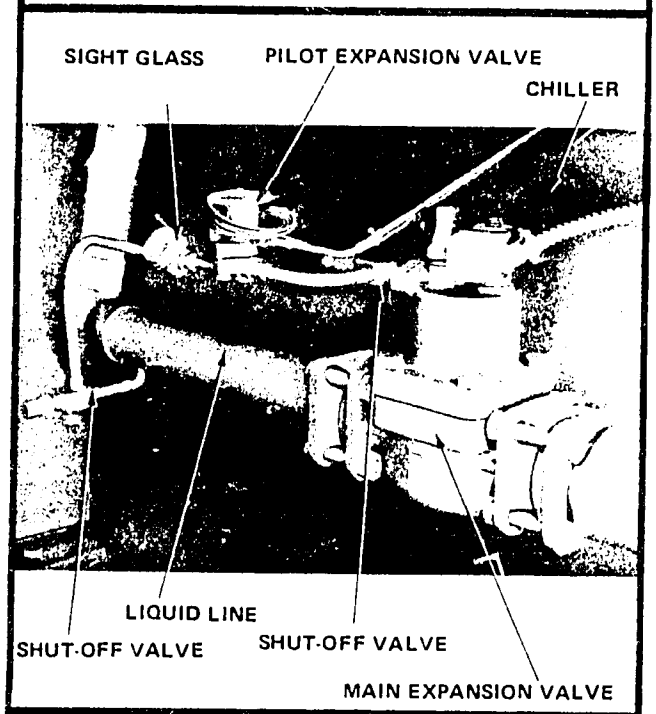

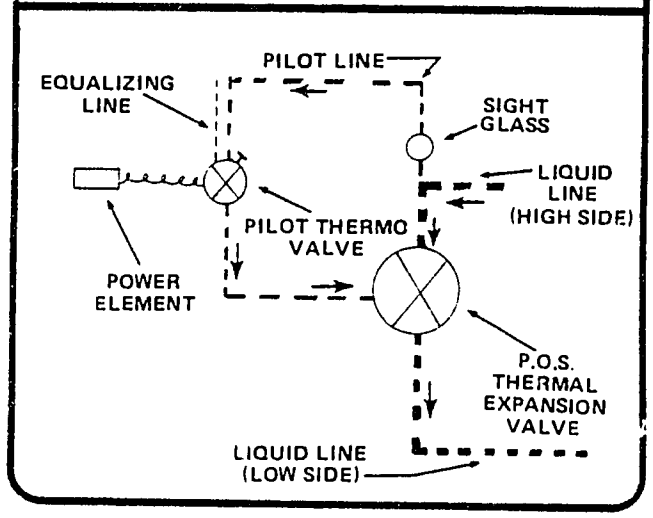

FIG. 42 TYPICAL THROTTLING ARRANGEMENTS

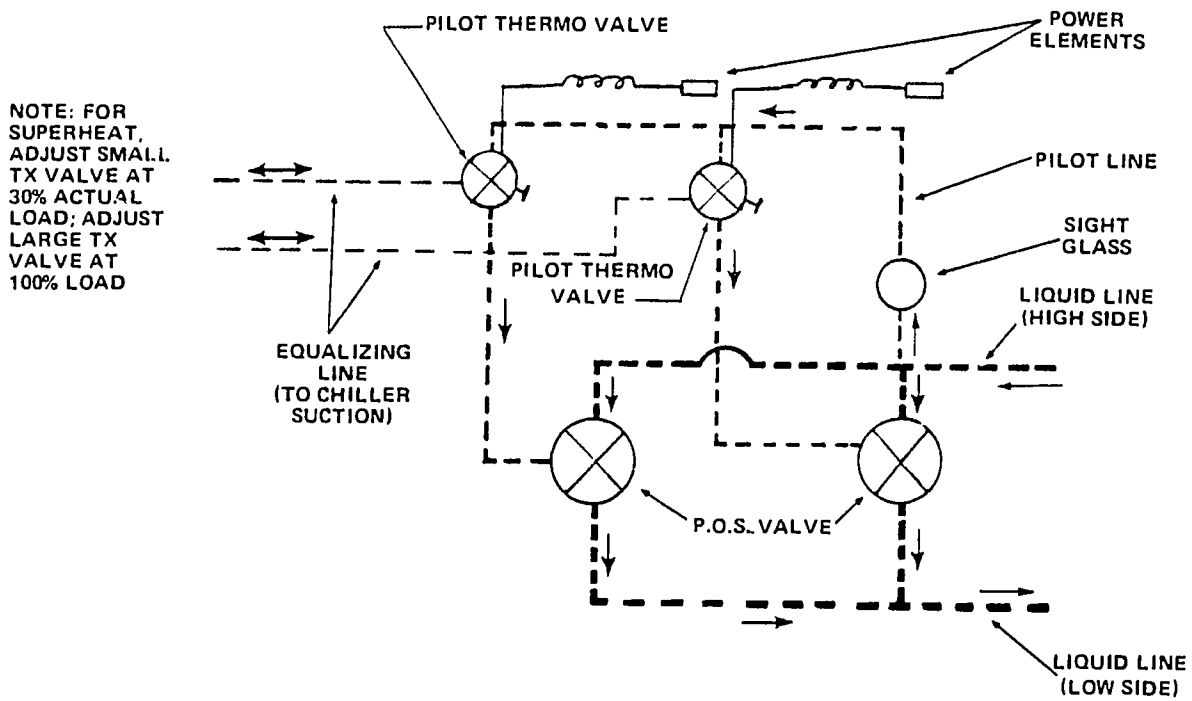

SCHEMATIC - (2) PILOT THERMO VALVES AND
(2) PILOT OPERATED SOLENOID THERMAL EXPANSION VALVES.

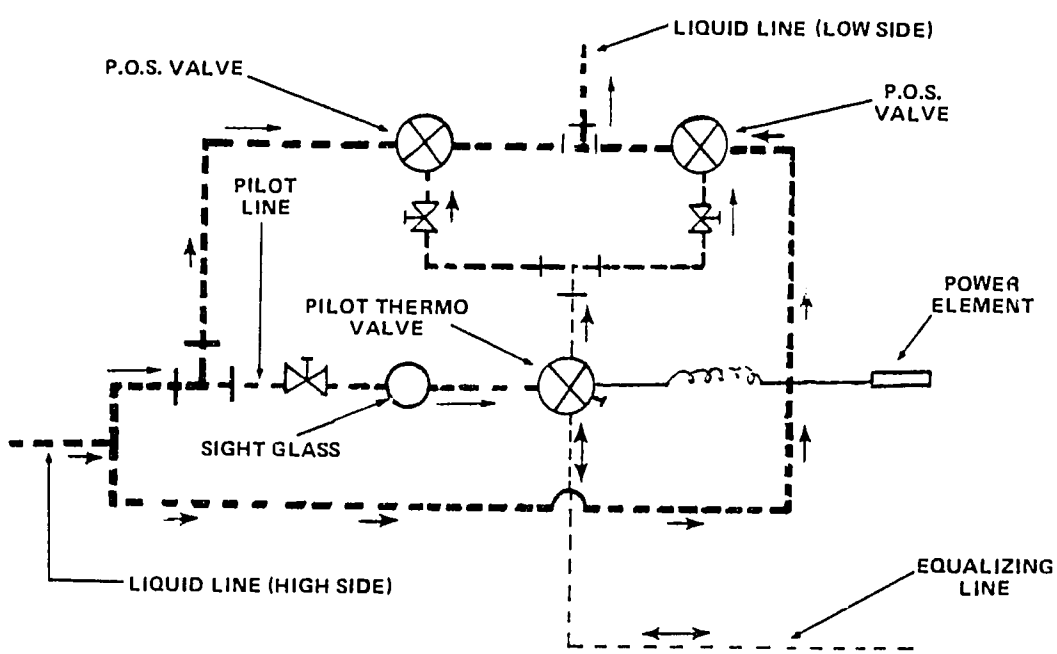

SCHEMATIC - (1) PILOT THERMO VALVE AND
(2) PILOT OPERATED SOLENOID THERMAL EXPANSION VALVES

520

FIG. 43 - TYPICAL SUCTION FILTER - IN LINE TYPE

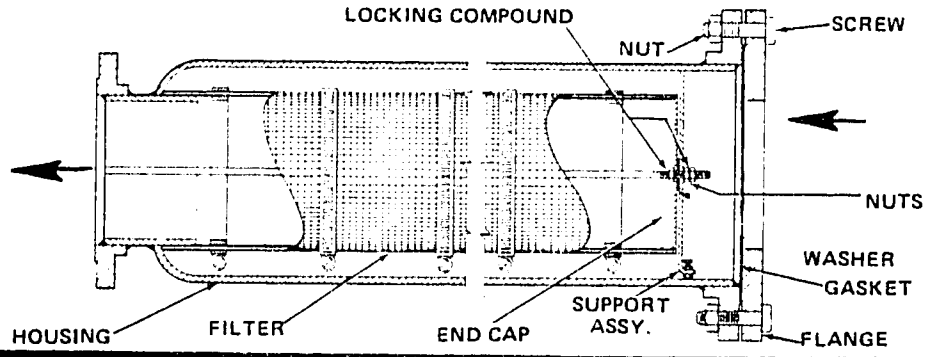

FIG. 44 - TYPICAL SUCTION FILTER - CHILLER HEAD TYPE

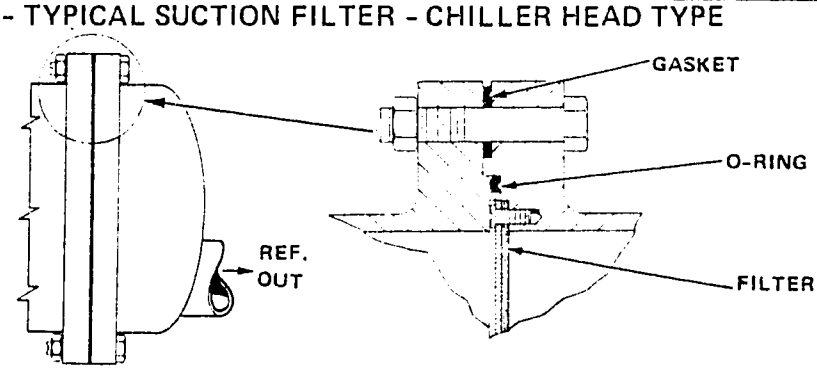

4h. Suction Filter

The suction filter should normally be inspected, cleaned or the element replaced only when a major overhaul is performed. Direct expansion type chiller units have the filter assembly located in the suction side of the chiller head. Flooded type chiller units have the filter located in the suction line near the compressor.

SP-33 *(Suction Filter Maintenance-In-Line Type)*

1. Transfer refrigerant to the condenser or remove the charge completely. (Refer to SP-7 thru SP-12) Isolate suction line and insure this portion of the system is at atmospheric pressure.

2. Remove insulation over suction filter.

3. Remove flange bolts, lift and remove housing weldment from piping. Remove old gaskets.

4. Remove support assembly and filter element and replace element.

NOTE: A locking compound has been applied on the nuts, when re-installing, be sure the compound is suitable for the refrigerant used and compatible with the refrigerant oil.

5. Position filter over support pipe. Install nut on center rod and push against end of filter.

NOTE: Adjusting screw on support assembly may be loosened for clearance.

6. Install second nut on center rod. Push support assembly hard against filter to crush overhanging media. Tighten outer nut against support assembly to secure it in place against filter core. Apply locking compound, then turn inner nut outward until it contacts inside surface of support assembly. Inner nut should now be in correct position.

7. Remove outer nut and support assembly. Install end cap, and position over filter. Install washers, support assembly and apply locking compound. Install outer two nuts. Tighten nut to clamp parts in place.

8. Adjust screw on support assembly to prevent end movement of filter. Apply locking compound to jam nut (on housing weldment) then tighten.

9. Re-install into piping using new gaskets, and torque bolts evenly. Epoxy insulation over housing weldment. Add refrigerant as required and test for any refrigerant leakage. (Refer to SP-15)

SP-34 *(Suction Filter Maintenance-Head Type)*

1. Transfer refrigerant to the condenser or remove the charge completely. Isolate the chiller and insure chiller is at atmospheric pressure (Refer to SP-7 thru SP-12).

2. Remove insulation at chiller suction head and suction flange. Remove flange bolts at chiller head and suction piping flange.

3. Remove chiller head and pipe assembly, head flange O-Ring and suction pipe flange gasket.

4. Disassemble filter element and inspect. Clean filter element with R-11 or replace if necessary.

5. Reassemble filter element to head with felt facing chiller.

6. Install chiller head assembly using new flange gaskets and head O-Ring.

7. Add refrigerant as required and test for any refrigerant leakage.

521

G. OPTIONAL SUBSYSTEM MAINTENANCE

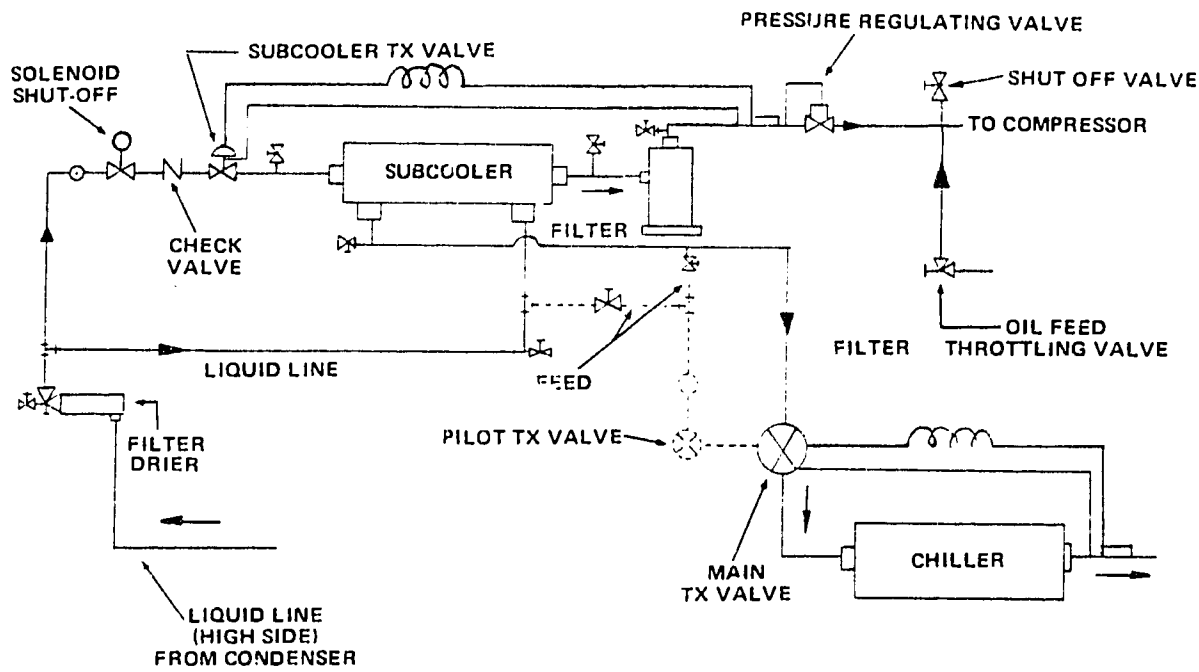

FIG. 45 TYPICAL VAPOR INJECTION SUBSYSTEM SCHEMATIC

1. VAPOR INJECTION

NOTE: It is necessary to have a load available that is sufficient to run the machine at full load at design conditions for the proper adjustment of the vapor injection system.

- **Adjustments**

- **Subcooler TX Valve** - Adjust superheat to 8°F to 12°F (4.4°C to 6.7°C) as measured at the subcooler outlet.

- **Evaporator Pressure Regulator** - Adjustment must be set at 10% below design conditions.

- **Feed Lines to Pilot TX Valve** - Use the warm liquid normally unless job conditions are such that unit operation is improved using cold liquid.

- **Oil Feed Valve** - Close valve until noise level increases; then back off 90° rotation.

- **Vapor Injection Shut-Off** - Normally set 65% slide valve travel to open solenoid. It can be adjusted from 40% to 75% to suit job conditions.

2. HOT GAS BYPASS (UNLOADED START)

The only periodic maintenance required on the unloaded start gas bypass is to insure the solenoid valve is operational and the timer maintains a 10 second timing period. The voltage supplied to the solenoid must not exceed ± 10% of the rated nameplate voltage. If the valve sticks or chatters, it should be disassembled and cleaned or replaced if required.

3. HOT GAS BYPASS (CAPACITY CONTROL)

The capacity control hot gas bypass requires a throttling valve adjustment upon installation and may require periodic readjustment. The throttling valve (located on the hot gas bypass line) should be adjusted at design percent slide valve activation as noted on the unit wiring diagram. The voltage supplied to the solenoid must not exceed ± 10% of the rated nameplate voltage. If the valve sticks or chatters, it whould be disassembled and cleaned or replaced if required.

SP-35 *(Hot Gas Bypass Adjustment)*

1. Position slide valve at design percent slide valve activation by manipulating the load to the chiller.

NOTE: Do not position slide valve by means of the temperature load controller. This will not reflect an accurate valve adjustment.

2. Monitor the temperature of the leaving chilled water or brine. if the temperature approaches the corresponding low pressure cut-out, open the throttling valve to avoid shut-down of the unit.

3. Rotating valve in the clockwise direction will lower leaving brine temperature, and may cycle off the unit. Rotating valve in the counter clockwise direction may load the compressor or may cycle the hot gas bypass solenoid on and off. Neither of these extremes are desirable. Adjust valve between these actions.

H. TYPICAL SYSTEM TESTS

MOTOR WINDING
1. INSULATION RESISTANCE TEST

This test is a measure of the dielectric resistance of the insulation to determine the condition of the motor. A D.C. voltage, greater than the operating voltage, is applied to the motor lead using a megohmmeter (megger). The resistance between ground and the motor lead is measured on the megger to determine the quality of insulation between the motor winding and ground. The megger is also used to determine the quality of insulation between the individual windings.

NOTE: Motor housing heaters must be activated a minimum of 24 hours to insure that the stator windings are at least 20°F (11°C) higher than the saturation temperature of the refrigerant vapor. The stator temperature is determined as specified in *SP-36*. A normal refrigerant charge in the unit is required.

CAUTION: As high voltages are used, extreme caution must be emphasized while conducting this test. All personnel in the area must be warned of the test being performed. All external power must be disconnected from the unit and safety gloves must be worn.

SP-36 *(Motor Insulation Resistance Test)*

1. Be sure that the main power source is disconnected from the unit.

2. Disconnect the motor terminal leads and the motor protector leads from their respective terminals on the compressor motor or oil pump motor.

3. Discharge any residual charges which may exist by grounding out each motor terminal.

4. Check the refrigerant pressure in the housing and with the proper refrigerant pressure temperature chart, convert the pressure to saturated temperature.

5. With an ohmmeter determine the resistance of each temperature sensor. With the table below convert this resistance to temperature. If this temperature does not exceed the saturated refrigerant temperature by at least 20°F (11°C) the housing heaters should be turned on for another 24 hours.

6. Phase to ground test - Connect the megger to terminal 1 and ground. Take a reading and record. Continue until readings of all terminals are taken and recorded.

7. Phase to phase test - Connect megger as shown in Figure 46 to isolate terminal 1. Take reading and record. Continue until all phases, as shown in Figure 46, have been isolated and their readings taken and recorded.

8. With the table below determine the minimum meg ohm values for the corresponding housing temperature. If the readings are below the minimum values, turn the housing heaters on for an additional 24 hours then repeat steps 5 through 7. If readings remain below minimum, contact National Service, Dunham-Bush, West Hartford, CT.

If readings are above the minimum, the power lead terminals may be connected and tightened in accordance with the label found in the cover of the terminal box.

9. Start the motor. After 8 or 10 hours of operation repeat this service procedure. If readings fall below the minimum values **DO NOT START MOTOR** *- Contact National Service, Dunham-Bush, West Hartford, CT.*

FIG. 46 PHASE TO PHASE TEST

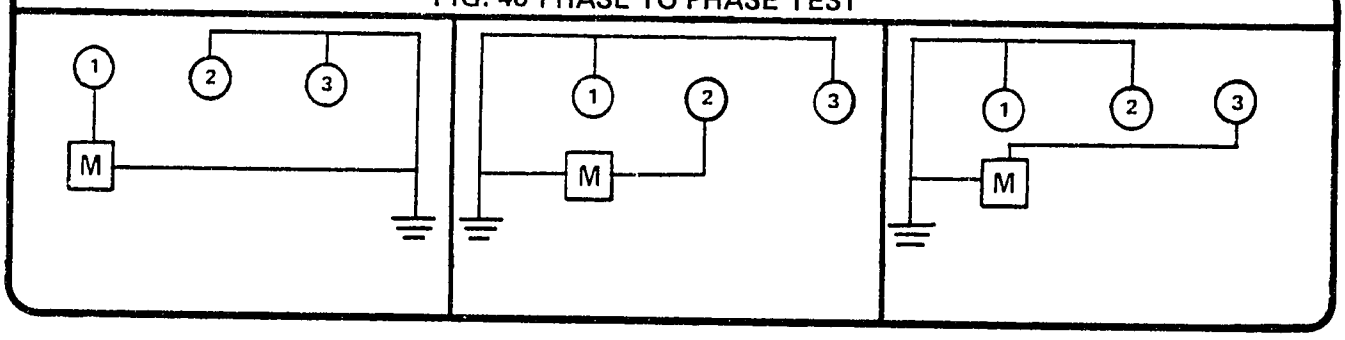

MINIMUM MEGGER VALUES

TEMP. SENSOR TERMINAL	CORRESPONDING TEMPERATURE		MINIMUM MEGGER READING	TEMP. SENSOR TERMINAL	CORRESPONDING TEMPERATURE		MINIMUM MEGGER READING	TEMP. SENSOR TERMINAL	CORRESPONDING TEMPERATURE		MINIMUM MEGGER READING	TEMP. SENSOR TERMINAL	CORRESPONDING TEMPERATURE		MINIMUM MEGGER READING	TEMP. SENSOR TERMINAL	CORRESPONDING TEMPERATURE		MINIMUM MEGGER READING
(OHMS)	(°F)	(°C)	(MEG OHMS)	(OHMS)	(°F)	(°C)	(MEG OHMS)	(OHMS)	(°F)	(°C)	(MEG OHMS)	(OHMS)	(°F)	(°C)	(MEG OHMS)	(OHMS)	(°F)	(°C)	(MEG OHMS)
68	40.0	4.4	215	78	90.1	32.3	60	88	139.5	59.7	5	98	187.4	86.3	5	108	233.3	111.8	5
69	45.0	7.2	185	79	95.1	35.1	50	89	144.4	62.4	5	99	192.1	88.9	5	109	237.8	114.3	5
70	50.0	10.0	165	80	100.1	37.8	40	90	149.2	65.1	5	100	196.3	91.3	5	110	240.7	115.9	5
71	55.0	12.8	135	81	105.1	40.6	35	91	154.1	67.8	5	101	201.4	34.1	5	111	242.3	116.8	5
72	60.0	15.6	125	82	110.0	43.3	30	91	158.9	70.5	5	102	206.0	96.7	5	112	251.1	121.7	5
73	65.0	18.3	115	83	115.0	46.1	25	93	163.7	73.2	5	103	210.6	99.2	5	113	255.5	124.2	5
74	70.0	21.1	90	84	119.9	48.8	20	94	168.5	75.8	5	104	215.2	102.0	5	114	259.8	126.6	5
75	75.0	23.9	85	85	124.8	51.6	15	95	173.2	78.4	5	105	219.8	104.3	5	115	264.1	128.9	5
76	80.0	26.7	75	86	129.8	54.3	10	96	178.0	81.1	5	106	224.3	106.8	5	116	268.9	131.3	5
77	85.0	29.4	65	87	134.7	57.1	10	97	182.7	83.7	5	107	228.8	109.3	5	117	272.7	133.7	5

H. TYPICAL SYSTEM TESTS CONTINUED

2. REFRIGERANT LEAK TEST

Pressure leak testing may be performed on either a component of the refrigerant system, or on the entire system.

> CAUTION: All gages must be valved off to avoid damage under high test pressure.

SP-37 *(Refrigerant Leak Test)*

1. *Complete System (Remove refrigerant charge and have sample tested for quality.*
   a. *Open all line valves and manually unseat the expansion valves.*
   b. *Add 25 psig of refrigerant R22. Back this up with dry nitrogen bringing the pressure up in steps to 90% of the relief valve setting for the chiller.*
   c. *Isolate the vessel (King Valve)*
   d. *Bring up the pressure in the remainder of the unit to 90% of relief valve setting for the condenser.*
   e. *Check all vessels, valves and joints with an electronic leak detector, or halide torch. If leaks are found, isolate them and make repairs.*
2. *Partial System*
   When the charge is pumped into the condenser a low side pressure leak check can be made using refrigerant R-22.

> CAUTION: If nitrogen is used the low side test pressure must be kept 20 psig below the condenser pressure to prevent nitrogen from contaminating the charge.

   a. *Open all refrigerant valves on the low side and unseat the expansion valves.*
   b. *Check all vessels, valves and joints with an electronic leak detector or halide torch. If leaks are found, isolate them and make repairs.*

3. CHECKING PHASING OF MOTORS FOR PROPER DIRECTION OF ROTATION

a. Start-up unit in normal manner.

b. When the compressor starts to accellerate, immediately check the suction pressure gage. If the pressure is dropping, the compressor is wired correctly and turning in the proper direction. If the suction pressure is rising, the motor is wired incorrectly and the control circuit breaker should be turned off immediately. Operation of the compressor in the wrong direction at full speed can damage the compressor and system.

4. TYPICAL CONTROL OPERATION TESTS

> WARNING: The factory is not responsible for damage to any component of the unit as a result of mis-calibration and or testing of safety and operational controls.

NOTE: No deviations in system wiring from that shown on schematics furnished shall be made without prior written approval of Dunham-Bush, Inc.

> CAUTION: The following procedures require that all control settings, valves and other devices and adjustments on the unit be at normal settings, or conditions, at the start of each procedure except as specifically stated. At the completion of each procedure, restore all normal conditions to the unit before starting the next procedure.
>
> Compressor starts limited to 3 starts per hour.

The purpose of tripping the safety controls is to insure proper operation and calibration to prevent a system failure. The tests may also be used to troubleshoot a suspected control defect. **Consult the wiring diagram for design settings. The following procedures are of a typical unit. Consult the wiring diagram to verify sequence of events.**

Equipment: Test lamp, ohm or multi-meter, thermometer, thermocouple tester, stop watch, resistance decade box, test gages.

4a. Safety Controls (Test)

(IPS) High /Low Suction Pressure Switch (Low Pressure Function)

With the unit operating normally unload the compressor to a minimum load by means of the manual knob on the temperature load controller. Gradually close the drier service valve (high side) and insure the safety switch light illuminates while the unit shuts down at the design low pressure cut-out.

(IPS) High Low Suction Pressure Switch (High Pressure Function)

With the unit operating normally, position the slide valve in the 10% to 30% range by means of the manual knob on the temperature load controller. Slowly throttle a shut-off valve in the condenser field piping. Observe that the safety switch light illuminates while the unit shuts down at the specified high pressure cut-out.

> CAUTION: Do not exceed the design high pressure cutout setting or 90% of the pressure setting of the high side relief valve.

Manually reset the high discharge pressure switch.

(7TAS) Low Refrigerant Temperature (Flooded Chiller)

With the control power off, place a continuity tester in parallel with the control. Remove the bulb of 7TAS from its well and immerse in an ice bath. Monitor the temperature of the ice bath. Adjust the setting of the control and observe if the control switches position at the temperature of the ice bath. If the control is not faulty readjust to its proper setting.

(1TAS) Compressor Motor Thermal Protector (Hermetic Models Only)

Disconnect compressor start control circuit to prevent compressor from starting. Disconnect line voltage at oil pump motor starter (or circuit breaker) to prevent oil pump operation during test. Disconnect and insulate wire from one motor sensor. Connect a resistance decade box set at 75 ohms to bypass the sensor. Reset the safety device located on this circuit. Activate control circuit voltage. Raise the resistance in 1 ohm increments to 110 ohms. At this point, raise the resistance in 0.1 ohms increments. Continue until the safety switch light illuminates. The resistance at this point should be 115.4 ± .80 ohms.

(12TAS) High Oil Temperature Control (Direct Drive)

With control power off, remove the power element bulb from the well and immerse in water bath. Raise

H. TYPICAL SYSTEM TESTS CONTINUED

and lower temperature of water bath to determine cut-in, cut-out, setting. Adjust accordingly to design temperature.

(13TAS) Seal Oil Temperature Safety (Direct Drive)

With control power off, disconnect the control. Connect a continuity tester to the terminals of the control and immerse the bulb into a water bath of 130°F (54.5°C). The control should trip at 130°F ± 5°F (54.5°C ± 2.8°C). Make adjustments as necessary.

(2TAS) Freezestat

Monitor the temperature of the leaving water or brine With control power off disconnect the freezestat from the control circuit. Connect a continuity tester to the terminals of the control. Raise the setting of this control to the temperature of the leaving water or brine. If the temperature is the same the control is in calibration and can be reset and reconnected into the circuit. If the temperature setting does not agree the control is faulty.

(FLS) Flow Switch

With the unit off, disconnect the electrical power to the chilled water pump. Attempt to start the unit. The safety light should illuminate while the unit does not start. Connect electrical power to pump and start chiller pump. Throttle water flow to chiller while monitoring pressure drop. Continue throttling until flow switch trips. Record ΔP across chiller. Flow switch should trip at approximately 25% of design pressure drop which will be approximately 50% of the design flow.

(1TR) Anti-Short Cycle Timer

Start the unit and observe that the anti-short cycle timer period light illuminates simultaneously with the start-up delay light. Observe that the anti-short cycle timer period light extinguishes 20 minutes after the start-up delay light is extinguished. The unit must operate continuously during this period to observe this action. This procedure will de-energize the anti-short cycle timer coil without stopping the unit, or attempting to restart, during the 20 minute time lapse.

4b. Automatic and Operating Controls (Test)

(3TR) Oil Pump Shut Down Time Delay Relay

With the unit off, pull the circuit breaker supplying electrical service to the oil pump motor. Attempt to start unit in normal manner. The oil pump starter will pull in. Observe that the oil pressure failure light is illuminated and that the oil pump starter drops out 60 seconds later.

(2TR) Oil Pressure Failure Time Delay

Connect a test lamp in parallel with the oil failure time delay coil. With the unit operating normally, gradually close the oil filter shut off valve(s) to slightly below pressure switch cut out pressure (high side of filter). Observe that the oil failure light illuminates and unit shutdown occurs 20 seconds later. If the unit has not shut down after 24 seconds, stop the machine manually and replace the timer.

(4TR) Start-Up Time Delay

Connect a test lamp to terminals on each side of the start-up time delay coil. Start the unit in the normal manner, and observe that the compressor starts after 60 seconds with continuous electrical power to the start-up time delay coil.

(2PS) Low Suction Pressure Unload Control

With the unit operating normally unload the compressor to minimum load by means of the manual knob on the temperature load controller. Gradually close the drier service valve (high side) and observe if the (fast) unload solenoid energizes when the suction pressure drops to design cut-in. Gradually open the filter drier service valve, and observe the (fast) unload solenoid de-energizes when the suction pressure rises to design cut-out. The differential on this control is fixed when used on std. heat reclaim units.

(3PS) Differential Oil Pressure

Connect a test lamp to terminals on each side of the oil failure time delay coil. With the unit operating normally, gradually close the oil filter shut-off valve(s) (high side of filter). Insure that the oil failure time delay coil energizes, when the oil refrigerant discharge differential pressure gauge drops to the design cut-in pressure. Gradually open the oil filter valve(s) and insure that oil failure time delay coil is de-energized when the oil refrigerant discharge differential pressure rises to the design cut-out pressure.

> **CAUTION:** This procedure must be performed with sufficient speed so that the oil failure time delay coil is actually energized for less than 20 seconds to prevent unit shut-down.

(12TR) Seal Oil T'stat By-Pass Timer (Direct Drive)

Start unit when the compressor initially starts, commence timing with a stop watch. After four minutes elapse, observe the contacts open on the seal oil t'stat by-pass timer relay.

(8TAS) Liquid Injection Thermostat (If Equipped)

With all power removed from the unit, disconnect the wire leading from the liquid injection thermostat to the liquid injection solenoid, connect a continuity tester across the liquid injection thermostat terminals. Remove the liquid injection thermostat bulb from its bulbwell and submerge in water in a suitable container. Raise and lower the water temperature and observe that the thermostat contacts close and open within design settings.

(TLC) Temperature Load Controller

> **CAUTION:** Heat reclaim TLC require this test when in heat reclaim load.

- **Current Limiting Function** - connect an Amp Probe at the terminals of the motor starter, with the unit operating normally at approximately full load, slowly throttle the water service valve in the field piping of the condenser. Observe the slide valve unload when the compressor motor current reaches 1.06 x the motor nameplate rated load amps.

H. TYPICAL SYSTEM TESTS CONTINUED

- **Temperature Control Function** - with the unit operating normally, observe that the chilled water (brine) outlet is at design temperature, when the index mark on the temperature knob is vertical. Rotate the knob clockwise and observe the slide valve unload. Rotate the knob counterclockwise, and observe the slide valve load. Reset at design temperature, rotate the temperature adjusting knob slightly back and forth to determine that there is ½° to 1°F (.28°C to .56°C) difference between loading and unloading action. This is the dead band. Replace the TLC if the dead band exceeds 3°F (1.7°C) ΔT.

4c. Additional Controls For Heat Reclaim Units

(13PS) Head Pressure Controller and Control Shunt (STD Heat Reclaim)

With the control panel off, valve off and disconnect the discharge pressure line at the (13PS) control. Remove control cover to obtain access to adjusting screws. Attach a container of nitrogen to a pressure regulating valve, a calibrated gauge, a manual vent, and a shut-off valve. Secure the connecting hose to the (13 PS) control inlet. Raise the pressure to the control to 13 PS step one design cut-in. Step-one switch should trip at design pressure. To raise the trip point, rotate the screw clockwise. Vent pressure slowly and observe switch trip back to its original position. Failure to trip at design cut-out requires adjustment of the differential wheel. The differential (cut in minus cut-out = diff.) is increased by clockwise rotation of the wheel. Only the step-one switch has an adjustable differential.

> CAUTION: Do not exceed the proof pressure rating on the nameplate or the design cut-in/cut-out pressures.

Repeat for 13 PS step two switch; raise pressure for design cut-out and reduce pressure for design cut-in, repeat for 13 PS step three switch; raise pressure for design cut-in, reduce pressure for design cut-out.

(7CR) Slide Valve Block To Prevent Unloading And Hot Gas By-Pass (Low Slide Valve Limit) STD-Heat Reclaim

NOTE: This control can only be checked while the unit is consistently operating in the heat reclaim mode throughout the test.

When the heat reclaim light (6 LT) illuminates manually unload the compressor by means of the temperature load controller (TLC) manual knob. Observe the slide valve indicator percent increments. The slide valve travel should stop at design low percent limitation while the hot gas by-pass solenoid is activated. For servicing the IDR assembly, consult compressor service manual 6136.

(10CR) Slide Valve Block To Prevent Loading (OPT)

NOTE: This control can only be checked when the unit is operating in the heat reclaim mode.

Immediately after the heat reclaim light illuminates, load the compressor by means of the temperature load controller (TLC) manual knob. Observe the slide valve indicator percent increments. The slide valve travel should stop at design high percent limitation.

> CAUTION: The leaving brine temperature should be monitored and a load must be available to unit to prevent shutdown.

STD. = Standard OPT = Optional

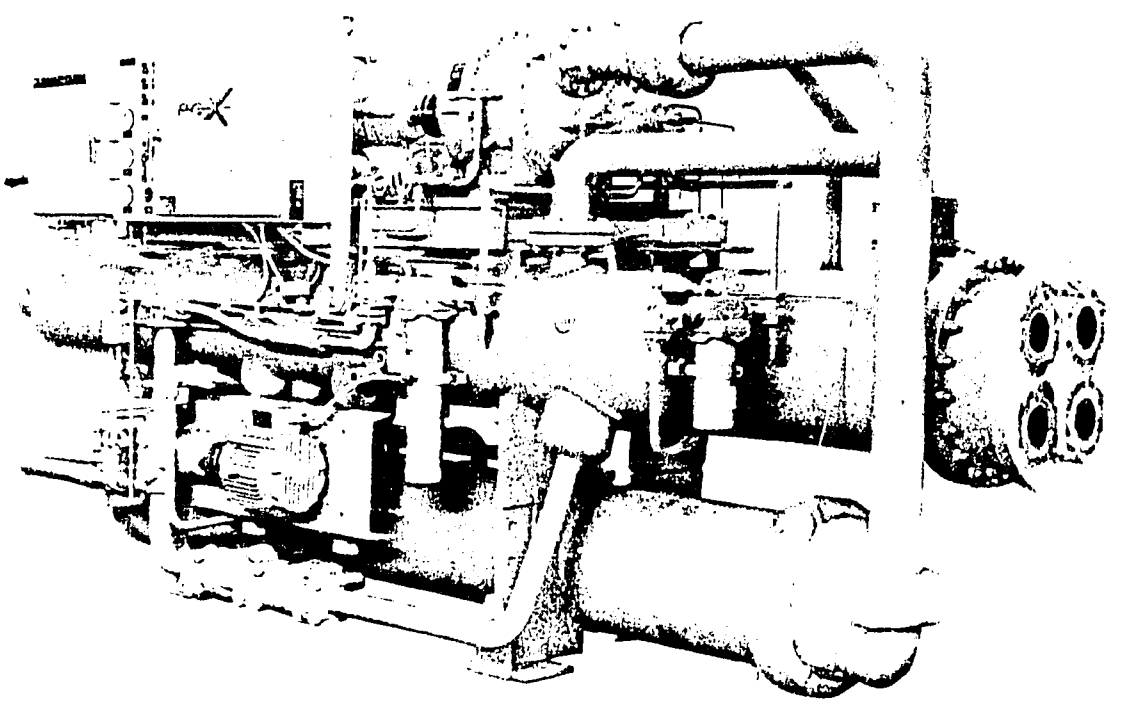

PCX-OHR - HEAT RECOVERY PACKAGED CHILLER

526

V. TROUBLE SHOOTING

A. GENERAL

Operating personnel must be completely familiar with the equipment and this manual. This will be necessary for correct diagnosis of any troubles and will permit immediate correction of minor difficulties. It is important that operators be able to quickly distinguish conditions requiring expert service in order to minimize down-time and maintenance expense. Comparison of the readings entered in the current Daily Log with those entered immediately following installation of the unit will be of considerable assistance in locating trouble areas.

To determine and isolate common problems which might occur, the following chart was made which lists symptoms, possible causes and remedies.

SYMPTOM	POSSIBLE CAUSE	REMEDY
A. Unit shuts down on compressor starter overload	1. Faulty compressor or motor 2. Overloads trip below 105% of full load amperage 3. Low voltage 4. Load limit relay out of adjustment	1. Contact Dunham-Bush Service Representative 2. Install properly sized overloads 3. Check line voltage. Must be ± 10% of rated voltage 4. Check and adjust for proper operation
B. Unit shuts down on oil pump starter overload	1. Cold oil 2. Low voltage 3. Bound Pump 4. Plugged oil filter 5. Faulty motor 6. Closed service valve	1. Check oil sump heaters for proper operation, repair and replace as necessary 2. Check line voltage must be ± 10% of rated voltage 3. Clean and repair as necessary 4. Clean and replace as necessary 5. Repair or replace as necessary 6. Open service valve
C. Unit shuts down on High-Low pressure switch	1. High Discharge Pressure a. Poor or no condensing water flow b. Condenser tubes fouled c. Refrigerant overcharge d. Air or noncondensables in refrigerant system e. Water supply to condenser is too warm f. Pressure switch out of calibration 2. Low Suction Pressure a. Plugged filter/drier b. Low refrigerant charge c. Low water flow thru chiller d. Fouled chiller e. Frozen chiller f. Pressure switch out of calibration g. Low condenser water temperature	1. a. Clean strainers, check setting of flow valve, check condenser pump - clean and repair as necessary b. Clean tubes, have water checked by water treatment specialist c. Remove excess refrigerant d. Purge air or non condensables e. Check, repair and adjust condenser water cooling facilities f. Reset or replace as necessary 2. a. Replace elements if pressure drop is above limits b. Check sight glass for flashing gas, check for leaks, repair leaks. Add refrigerant as necessary c. Check control valves for proper settings, check for dirty strainer, adjust clean and repair as necessary d. Clean chiller, consult water treatment specialist e. Check and reset or replace freeze-up switch as necessary, check brine for proper % solution f. Reset or replace as necessary g. Adjust condenser water regulating valve (if applicable). Check tower temperature controls
D. Shut down of unit on seal oil temp.	1. Low refrigerant charge 2. Inoperative TX valve 3. Inoperative seal oil cooler solenoid 4. Filter drier plugged	1. Check sight glass for flashing gas, check for leaks Repair leaks add refrigerant as necessary 2. Replace valve 3. Check coil for burnout 4. Clean or replace as necessary
E. Shut down on high oil temp.	Units with Liquid Injection: 1. Low refrigerant charge 2. Inoperative liquid injection TX valve 3. Inoperative liquid injection solenoid 4. Discharge temperature thermostats out of adjustment Units with Water Cooled Oil Cooler: 5. Oil cooler water valve out of adjustment 6. Inadequate water supply to oil cooler 7. Dirty oil cooler	1. Check sight glass for flashing gas, check for leaks, repair leaks and add refrigerant as necessary 2. Replace valve 3. Check coil for burnout 4. Reset to lower temperature 5. Readjust 6. Check condenser water pump and clean strainer 7. Check and clean tubes if necessary, check condenser water treatment installation
F. Unit shuts down on freezestat	1. Inadequate flow of chilled water 2. Malfunctioning freezestat 3. Incorrect TLC temperature setting	1. Check settings of valves, clean strainers, check chiller pump, clean and repair as necessary 2. Reset or replace as necessary 3. Readjust to desired leaving chilled water temperature
G. Unit shuts down on flow switch	1. Pump malfunctioning 2. Strainers plugged 3. Valves not set properly 4. Air in system 5. Flow switch inoperable	1. Check pump, clean and repair as necessary 2. Clean strainers 3. Reset valves 4. Bleed system 5. Replace

V. TROUBLE SHOOTING

A. GENERAL CONTINUED

SYMPTOM	POSSIBLE CAUSE	REMEDY
H. Unit shuts down on chilled water pump	1. Overload on pump	1. a. Pump malfunction, repair or replace as necessary b. Plugged strainer - clean c. Closed system valves, reset as necessary
J. Low discharge/oil temperature	1. Sump heaters not functioning during off period 2. Maladjusted expansion valves 3. Discharge temperature thermostat out of adjustment Water Cooled Oil Coolers 4. Oil cooler water valve out of adjustment 5. High water pressure	1. Repair and replace as necessary 2. Readjust superheat settings of main expansion valves, liquid injection and seal oil cooler expansion valves 3. Reset to lower temperature Water Cooled Oil Coolers 4. Readjust 5. Readjust water pressure regulator
K. High discharge/ oil temperature	1. Maladjusted expansion valve 2. Discharge temperature thermostat out of adjustment 3. Liquid injection solenoid valve malfunction Water Cooled Oil Coolers 4. Oil cooler water valve out of adjustment 5. Inadequate water supply to oil cooler 6. Dirty oil cooler	1. Readjust superheat settings of main expansion valves, liquid injection and seal oil cooler expansion valves 2. Reset to lower temperature 3. Check coil for burnout. Water Cooled Oil Coolers 4. Readjust 5. Check condenser water pump and clean strainer 6. Check and clean tubes
L. Unit periodically running low or losing oil	1. External oil leak 2. Low discharge superheat and or suction superheat 3. Units with jet pump not picking up oil - clogged lines or maladjusted valves 4. Discharge temperature thermostat out of adjustment 5. Liquid injection solenoid valve malfunction 6. Liquid injection TX valve malfunction	1. Check unit visually for leaks, repair as necessary 2. Readjust superheat as necessary 3. Repair or readjust as necessary 4 Reset to lower temperature 5. Repair or readjust as necessary 6. Repair or readjust as necessary
M. Shut down on low oil pressure	1. Oil filter plugged 2. Low oil pressure safety switch malfunction 3. Low discharge superheat and or suction superheat	1. Clean and replace as necessary 2. Repair or readjust as necessary 3. Readjust superheat as necessary

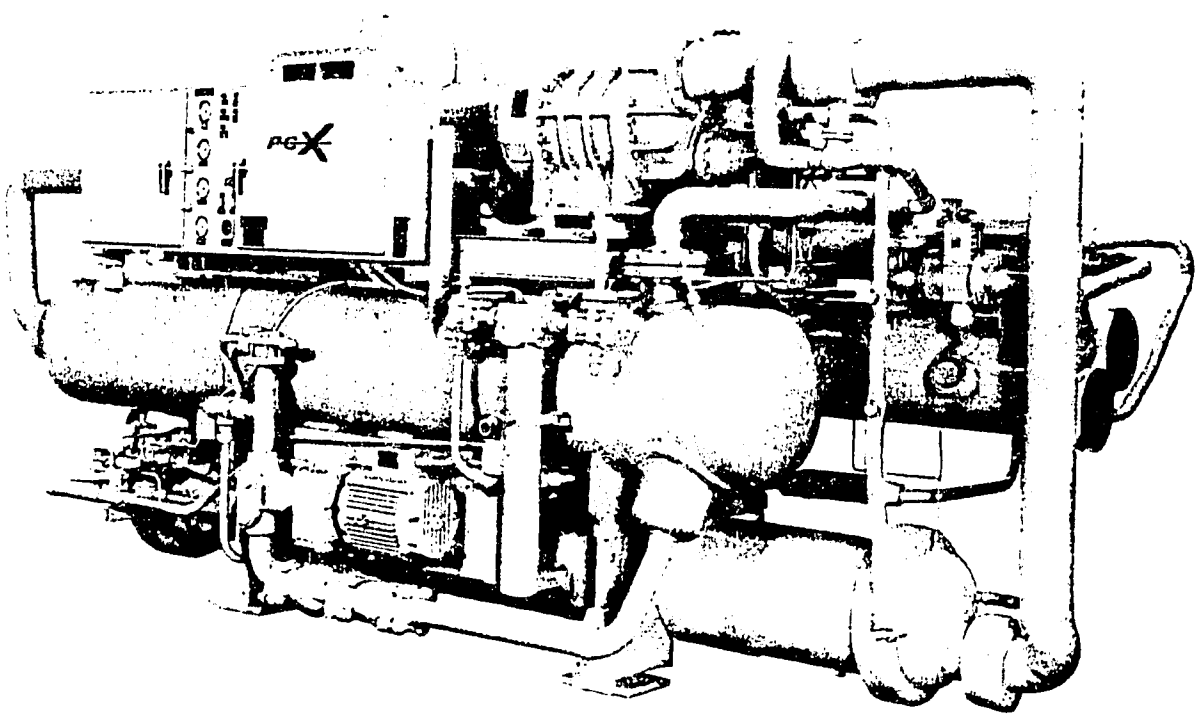

IPCX-O DIRECT DRIVE PACKAGED CHILLER

VI. APPENDIX

A. TYPICAL DAILY OPERATING LOG

FORM 9181A

DUNHAM-BUSH

DAILY OPERATING LOG
ROTARY SCREW COMPRESSOR PACKAGED CHILLER (PCX, IPCX)

UNIT MODEL _____ MONTH _____

UNIT SERIAL NUMBER _____ YEAR _____

		DATE		MONDAY	TUESDAY	WEDNESDAY	THURSDAY	FRIDAY	SATURDAY	SUNDAY
TIME		CHECK		☐AM ☐PM	☐AM ☐PM	☐AM ☐PM	☐AM ☐PM	☐AM ☐PM	☐AM ☐PM	☐AM ☐PM
ELAPSED TIME INDICATOR READING		HR								
SLIDE VALVE INDICATOR POSITION		%								
MOTOR CURRENT (COMPRESSOR)		AMPS								
MOTOR VOLTAGE (COMPRESSOR)		VOLTS								
REFRIGERANT SUCTION PRESSURE		PSIG	kPa							
REFRIGERANT SUCTION TEMPERATURE		°F	°C							
REFRIGERANT DISCHARGE PRESSURE		PSIG	kPa							
REFRIGERANT DISCHARGE TEMPERATURE		°F	°C							
NET OIL PRESSURE (GAGE MINUS DISCHARGE)		PSI	kPa							
SEAL DRAINAGE (DIRECT DRIVE ONLY)		CC/HR.								
SEAL OIL TEMPERATURE (DIRECT DRIVE ONLY)		°F	°C							
OIL TEMPERATURE ENTERING COMPRESSOR		°F	°C							
OIL SUMP SIGHT GLASS LEVEL		%								
WATER TEMPERATURES (CONDENSER)	ENTERING	°F	°C							
	LEAVING	°F	°C							
OUTSIDE AMBIENT AIR TEMPERATURE	WET BULB	°F	°C							
	DRY BULB	°F	°C							
REFRIGERANT INDICATORS		WET/DRY								
TRANSFER MEDIUM (BRINE, WATER) TEMPERATURES (CHILLER)	ENTERING	°F	°C							
	LEAVING	°F	°C							
CHILLED (AIR) MEDIUM (SYSTEM)	IN DRY BULB	°F	°C							
	IN WET BULB	°F	°C							
	OUT DRY BULB	°F	°C							
	OUT WET BULB	°F	°C							
RECORDED BY										
COMMENTS										

DUNHAM-BUSH

FORM NO. 9181-1

MONTHLY OPERATING LOG
ROTARY SCREW COMPRESSOR PACKAGED CHILLER (PCX, IPCX)

UNIT MODEL _____ DATE _____

UNIT SERIAL NO. _____ RECORDED BY _____

☐ 1000 HOUR INTERVAL

LUBRICATION	OIL FILTER PRESSURE DROP		PSI	kPa	
	OIL PUMP MOTOR CURRENT		AMPS		
	OIL PUMP MOTOR VOLTAGE		VOLTS		
	OIL SUMP HEATER OPERATION		—		
	LOAD/UNLOAD SPEED (FULL STROKE)		MINUTES		
	OIL PUMP MOTOR STARTER AND RELAY CONTACTORS		—		
	SEAL OIL COOLER OPERATION (DIRECT DRIVE ONLY)		—		
	EVAPORATOR OIL RETURN VALVE (IF EQUIPPED)		—		
	COMPRESSOR MOTOR STARTER AND RELAY CONTACTORS		—		
	CONTROL AND GAGE CALIBRATION		—		
REFRIGERANT	REFRIGERANT LEAKAGE		—		
	FILTER DRIER PRESSURE DROP		PSI	kPa	
	LIQUID INJECTION OPERATION		—		
	DISCHARGE SUPERHEAT	DISCHARGE TEMP.	°F	°C	
		DISCHARGE PRESSURE	PSIG	kPa	
		SUPERHEAT	ΔF°	ΔC°	
	SUCTION SUPERHEAT	SUCTION TEMPERATURE	°F	°C	
		SUCTION PRESSURE	PSIG	kPa	
		SUPERHEAT	ΔF°	ΔC°	
HYDRONIC	CHILLER COOLING MEDIUM	FREEZE-POINT	°F	°C	
		PH (BRINE ONLY)	—		
	CONDENSER PRESSURE DROP (WATER SIDE)		PSI	kPa	
	CHILLER PRESSURE DROP (BRINE SIDE)		PSI	kPa	

COMMENTS _____

☐ 3000 HOUR INTERVAL

COMPRESSOR COUPLING ALIGNMENT (DIRECT DRIVE MODELS ONLY)		CM	INCH	
OIL PUMP COUPLING ALIGNMENT (DIRECT DRIVE OIL PUMP ONLY)		CM	INCH	
OIL ACIDITY (TOTAL ACID NUMBER)			TAN	
INSULATION RESISTANCE TEST	TEMP. SENSOR READINGS		OHM	
	MEG OHM READINGS		MEG OHM	

C. TYPICAL CONDENSER WATER PIPING

CONDENSER WATER PIPING

A relatively constant condensing temperature (compressor head pressure) should be maintained. The supply water temperature and flow rate must, therefore, be controlled to maintain this constant condensing temperature over the wide load and operating range of the packaged chiller. Valve manufacturers recommendations for piping should be followed.

If a cooling tower is supplying the condenser water, then some means to maintain a constant water supply temperature should be employed.

There are a number of different methods; e.g., cycling the tower fan off and on through a thermostat sensing the cooling tower sump water; temperature dampers controlling air flow (may also be used in conjunction with fan cycling) or by-passing all or part of the return water directly to the sump via a 3-way valve actuated by a controller sensing sump temperature.

The most stable compressor operation can be obtained with a water regulating valve modulating the water flow to the condenser, controlled by condensing pressure.

Heat reclaim units condense refrigerant at higher pressures while operating in the heat reclaim mode. However, this is justified by the amount of heating and cooling performed per kilowatt input. Controlling head pressures for heat reclaim units is highly specialized depending on the system application and is not included in this discussion.

The following are typical valving arrangements with suggested guidelines for the piping configurations. The cooling source is applicable to cooling towers, evaporative water coolers and natural sources.

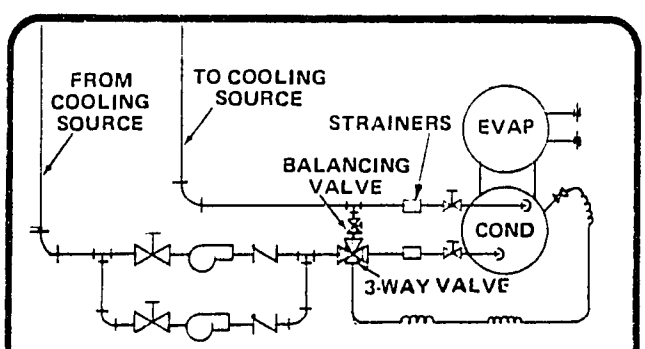

FIG. 47 TYPICAL DIVERSION OF ENTERING CONDENSER WATER

1. **Typical Diversion of Entering Condenser Water with Three-Way Valve.(Fig. 47)**

   Stable packaged chiller operation can be obtained by diverting a percentage of the entering water to bypass the condenser as a function of condensing pressure.

   With a diverting system, entering condenser water is regulated by a three-way valve sensing refrigerant condensing pressure. The water valve therefore maintains constant refrigerant head pressure in the condenser.

   - **Oil Cooler Piping** - Units that are equipped with a water cooled oil cooler have a two-way water regulating valve.(Fig. 48)

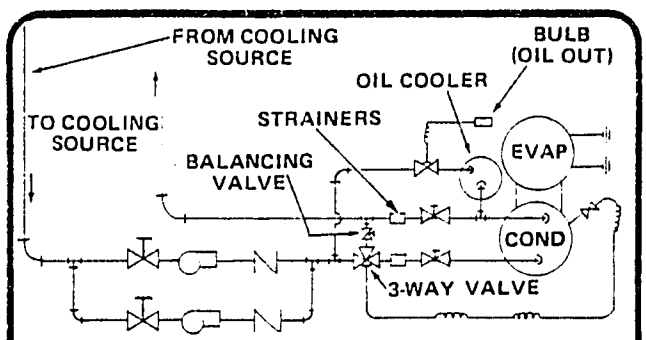

FIG. 48 TYPICAL DIVERSION OF ENTERING CONDENSER WATER WITH OIL COOLER

   With this configuration, the piping must be designed to have an uninterrupted water supply flow to the oil cooler. The supply to the oil cooler must be located upstream of the condenser water regulating valve.

2. **Cool Weather Package Operation**

   Any application of condenser water regulating valves with an anticipated entering water temperature of below 50°F (10°C) requires additional considerations. A minimum condensing pressure must be maintained to insure proper operation of the thermal expansion valves. If entering condenser water is not effectively regulated, proper operation of the packaged chiller may be jeopardized. Consult factory for parameters concerning your application.

3. **Cold Weather Operation (Cooling Towers)**

   If a system is to be operated in a cold climate [below 32°F (0°C)] some provision must be made to keep the cooling tower from freezing. Sump heaters or an indoor sump are two examples of how this can be accomplished. Consult the tower manufacturer for recommendations.

VI. APPENDIX

D. COMPRESSOR LUBRICATION REQUIREMENTS

The purpose of this chart is to define the type of oil used with large screw compressors (163, 204, 255mm) for various fluorocarbon applications.

TYPE OF OIL

TEMPERATURE		REFRIGERANT		
EVAPORATOR	CONDENSING	R-502 R-22	R-12	R-500
Above 20°F	Below 135°F	Oil 4	Oil 4	Oil 4
Above 20°F	Above 135°F	NA	Oil 14	Oil 14
Below 20°F	All	Oil 3	Oil 3	NA

This chart is used to define the oil pressure and oil failure switch settings for various applications.

REQUIRED OIL PRESSURE

TYPE SYSTEM	MINIMUM OIL FAILURE CUT-OUT SETTING (PSID)		FULL LOAD OIL PRESSURE (PSID)	
	BELOW 20° ET	ABOVE 20° ET	BELOW 20° ET	ABOVE 20° ET
PCX	20	20	40	40
IPCX	20	20	40	40
Heat Recovery	35	35	65	65

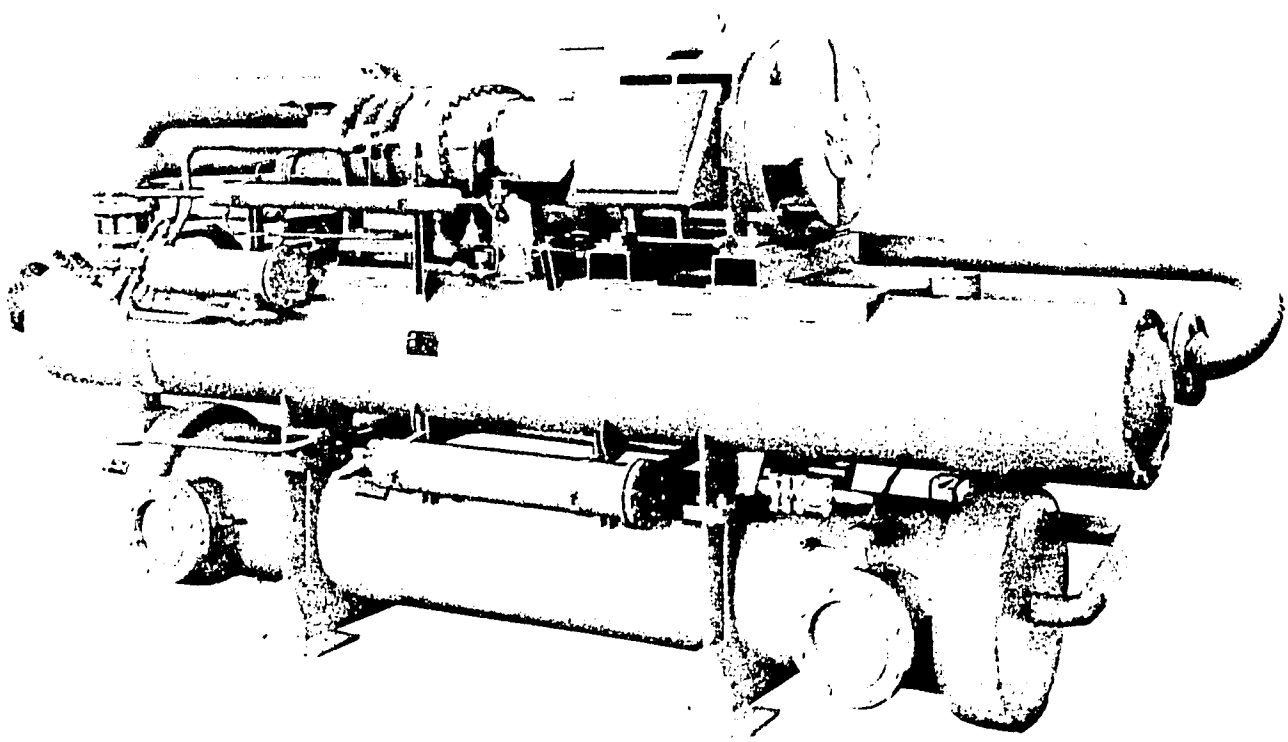

PCX-O DIRECT DRIVE PACKAGED CHILLER

532

VI. APPENDIX

E. TYPICAL INFORMATION TAGS AND LABELS

CAUTION

ALL ELECTRICAL CONNECTIONS MUST BE RETIGHTENED PRIOR TO STARTING THIS EQUIPMENT.

LOOSE CONNECTIONS CAN CAUSE DAMAGE TO THE WIRE, CONTROLS, MOTORS & ALSO CREATE A FIRE HAZARD.

TAG 56

USE
R22
ONLY

A-TAG 1-1

DISCHARGE
WARNING

OPEN THIS VALVE
BEFORE STARTING

DUNHAM-BUSH, INC.
COMPRESSOR DIVISION
WEST HARTFORD, CONN., U.S.A.

CHECK CONTROLS SETTINGS
BEFORE START-UP OF UNIT

CAUTION

'HAZARD OF ELECTRICAL SHOCK'
MORE THAN ONE DISCONNECT SWITCH MAY BE REQUIRED TO DE-ENERGIZE THE EQUIPMENT FOR SERVICING.

PLT2089

MOTOR TEMPERATURE SENSORS

USE ONLY THREE SENSORS-ONE IN EACH MOTOR PHASE

SENSORS 1 & 4 IN PHASE 1
SENSORS 2 & 5 IN PHASE 2
SENSORS 3 & 6 IN PHASE 3

COMBINATIONS OF SENSORS FROM BOTH SENSOR SETS CAN BE CONNECTED TO THE SAME MODULE; HOWEVER, TO DO SO THE COMMON TERMINALS OF BOTH SETS MUST BE CONNECTED TOGETHER.

AB-DCM 83

WARNING

DO NOT FORK LIFT FROM THIS END

A476029-001

CAUTION

PRIOR TO STARTING MOTOR:

STEP 1: MOTOR HOUSING HEATERS MUST BE ENERGIZED FOR 24 HOURS.
STEP 2: THE MOTOR TEMPERATURE RISE MUST BE AT LEAST 20°F ABOVE AMBIENT.
STEP 3: THE MOTOR MEGOHM READING MUST BE AT LEAST 50 MEGOHMS.

IT MAY BE NECESSARY TO LEAVE HEATERS ON LONGER THAN 24 HOURS TO ACHIEVE 20°F TEMP. RISE & 50 MEGOHMS IN SOME CASES.

STK36

TESTING OF MOTOR TEMPERATURE SENSORS

TO PREVENT PERMANENT DAMAGE TO THE MOTOR SENSORS, DO NOT CHECK THE SENSOR RESISTANCE WITH ANY INSTRUMENT POWERED BY A SOURCE GREATER THAN 6 VOLTS

AG 69-1

VI. APPENDIX

E. TYPICAL INFORMATION TAGS AND LABELS

OIL PUMP MOTOR POWER SUPPLY WIRING

THE POWER SUPPLY TO OPERATE THE OIL PUMP MOTOR IS FURNISHED AND WIRED BY THE CUSTOMER.

THE SUPPLY IS CONNECTED TO TERMINALS L1, L2, AND L3 OF THE OIL PUMP MOTOR CONTACTOR OR STARTER LOCATED IN THE CONTROL PANEL.

TAG 68

CAUTION

PRIOR TO STARTING THIS UNIT PHASE SEQUENCE MUST BE CHECKED TO AGREE WITH THE CONNECTIONS OF THE OIL PUMP & COMPRESSOR MOTORS TO INSURE PROPER DIRECTIONAL ROTATION SEE INSTRUCTION MANUAL FOR VISUAL METHOD OF DETERMINING ROTATION WITH THE USE OF THE SYSTEM GAGES

TAG 61

WARNING

THIS MOTOR LIMITED TO THREE STARTS PER HOUR.

RESTARTING MORE OFTEN WILL DAMAGE MOTOR.

DO NOT BYPASS OR ADVANCE ANTI RECYCLE TIMER.

WARNING

RELIEF VALVE VENTING INFORMATION

CAUTION

1. FLEXIBLE CONNECTIONS MUST BE USED BETWEEN RELIEF VALVE AND EXTERNAL PIPING AND PIPING MUST BE SUPPORTED TO PREVENT STRAIN FROM BEING TRANSMITTED TO THE RELIEF VALVE ASSEMBLY
2. WHEN TIGHTENING THE VENT CONNECTIONS TO THE RELIEF VALVE, HOLD THE UPPER HEX PORTION OF THE RELIEF VALVE WITH A WRENCH TO PREVENT IT FROM TURNING. THIS WILL PREVENT GASKET DAMAGE AND POSSIBLE LEAKES. DO NOT OVER TIGHTEN THE CONNECTIONS TO THE RELIEF VALVES.

P/N 050126A1

ATTENTION: SPECIAL FILTER ASSEMBLY INSTRUCTIONS P/N: 050018A1

(1) THE ELEMENTS IN THIS SCHROEDER FILTER REQUIRE NEOPRENE GASKETS FOR FREON REFRIGERANTS
(2) STANDARD SCHROEDER ELEMENTS SUCH AS THOSE OBTAINED FROM LOCAL SOURCES HAVE BUNA N GASKETS THESE GASKETS CANNOT BE USED WITH FREON REFRIGERANTS AND MUST BE DISCARDED
(3) FILTER ELEMENTS WITH NEOPRENE GASKETS ARE D/B PART NO FLR125 AND ARE MARKED G603
(4) MOLDED NEOPRENE GASKETS ARE D/B PART NO GKT543 AND ARE IDENTIFIED WITH A BLUE MARK
(5) FLAT NEOPRENE GKT523 OR MOLDED NEOPRENE GASKETS GKT543 CAN BE REUSED IF NECESSARY IT IS RECOMMENDED THAT SPARE FLR125 SETS BE ORDERED TO BE AVAILABLE WHEN REQUIRED

WARNING

MOST WATER SUPPLIES CONTAIN DISSOLVED OR SUSPENDED MATERIALS WHICH CAUSE SCALE FORMATION, CORROSION AND PROPOGATE SLIME, ALGAE, ETC. IN ORDER TO PREVENT EXCESSIVE MAINTENANCE COSTS DUE TO SCALE FORMATION AND POSSIBLE TUBE FAILURE

IT IS ESSENTIAL

THAT BOTH CONDENSER WATER AND CHILLER SYSTEM WATER BE ANALYZED BY A QUALIFIED WATER TREATMENT COMPANY.

AND THEIR RECOMMENDATION FOR PROPER CONDENSER AND CHILLED WATER TREATMENT BE FOLLOWED

ANY FAILURE DUE TO IMPROPER AND/OR LACK OF WATER TREATMENT

WILL VOID THE WARRANTY.

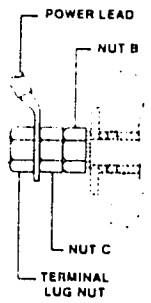

POWER LEAD TERMINAL TIGHTENING PROCEDURE

1. NUT C TO BE JAMMED AGAINST NUT B WHILE HOLDING NUT B.
2. INSTALL POWER LEAD TERMINAL ON STUD AND TORQUE TERMINAL LUG NUT TO VALUE IN TABLE BELOW WHILE HOLDING NUT C.
3. MAKE SURE THAT TERMINAL STUD DOES NOT TURN WHILE TORQUING TERMINAL LUG NUT.

TERMINAL TORQUING SPEC.

COMP. MODEL	TERMINAL LUG NUTS
102	3 LB. FT.
127	15 LB. FT.
163, 204	20 LB. FT.
255	30 LB. FT.

OCM 68

KEEP VALVES CLOSED EXCEPT WHEN READING GAUGES

CAUTION

IMPORTANT APPLICATION MOTOR INFORMATION PLT 2224

1. THE OVERLOADS PROTECTING THIS MOTOR MUST BE SET TO TRIP AT OR BELOW THE MAXIMUM CONTINUOUS CURRENT (AMPERE) RATING STAMPED HERE [ ]
2. THE STARTER AND OVERLOADS MUST CONFORM TO DUNHAM-BUSH SPECIFICATION ES-ELC-9.
3. NO CONTROLS, MANUAL OR AUTOMATIC, WHICH WILL START OR STOP THE MOTOR INDEPENDENTLY OF THE UNIT CONTROL CIRCUIT AND/OR BYPASS THE ANTI-RECYCLE TIMER ARE ALLOWED
4. MAXIMUM VOLTAGE UNBALANCE ALLOWED AT THE COMPRESSOR MOTOR TERMINALS IS 1%.
5. MAXIMUM VOLTAGE TOLERANCE IS ±10% OF STAMPED COMPRESSOR NAMEPLATE VOLTAGE MEASURED AT THE COMPRESSOR MOTOR TERMINALS
6. FAILURE TO ADHERE TO THE ABOVE WILL VOID THE WARRANTY

DUNHAM-BUSH

AIR CONDITIONING, REFRIGERATION, HEATING PRODUCTS AND ACCESSORIES

MAIN OFFICES

175 SOUTH STREET WEST HARTFORD, CONNECTICUT 06110

FACTORIES

WEST HARTFORD DIVISION
179 South Street
West Hartford, Connecticut
06110

HARRISONBURG DIVISION
101 Burgess Road
Harrisonburg, Virginia
22801

MARSHALLTOWN DIVISION
811 East Main Street
Marshalltown, Iowa
50158

RIVERSIDE DIVISION
1850 Massachusetts Ave.
Riverside, California
92507

SUBSIDIARIES

DUNHAM-BUSH of Canada Limited
140 Wendell Avenue
Weston, Ontario

DUNHAM-BUSH, LTD.
Fitzherbert Road, Farlington
Portsmouth, Hampshire, England

DUNHAM-BUSH INTERNATIONAL: 175 South Street, West Hartford, Connecticut 06110, U.S.A.
CABLE: DUNBUSH or TELEX: 994469

SALES OFFICES

ALABAMA
Birmingham
Mobile

ARIZONA
Phoenix

ARKANSAS
Little Rock

CALIFORNIA
Arcadia
Los Angeles
San Diego
San Francisco

COLORADO
Denver

CONNECTICUT
Hartford
New Haven

FLORIDA
Jacksonville
Miami
Orlando
Tampa

GEORGIA
Atlanta

HAWAII
Honolulu

ILLINOIS
Chicago
Peoria
Rockford

INDIANA
Indianapolis
Michigan City

IOWA
Des Moines

KANSAS
Lenexa

KENTUCKY
Louisville

LOUISIANA
New Orleans
Shreveport

MAINE
Lewiston

MARYLAND
Baltimore
Silver Spring

MASSACHUSETTS
Boston
Springfield

MICHIGAN
Detroit
Grand Rapids
Kalamazoo

MINNESOTA
Minneapolis

MISSISSIPPI
Jackson

MISSOURI
Kansas City
St. Louis

MONTANA
Billings
Great Falls

NEBRASKA
Omaha

NEW JERSEY
Little Falls
South Amboy
Union

NEW MEXICO
Albuquerque

NEW YORK
Albany
Buffalo
New York City
Rochester
Syracuse

NORTH CAROLINA
Charlotte
Greensboro

OHIO
Akron
Cincinnati
Cleveland
Columbus
Dayton
Delaware
Toledo

OKLAHOMA
Oklahoma City
Tulsa

OREGON
Portland

PENNSYLVANIA
Harrisburg
Philadelphia
Pittsburgh
Pittston

RHODE ISLAND
Providence

SOUTH CAROLINA
Columbia
Greenville

TENNESSEE
Chattanooga
Memphis
Knoxville
Nashville

TEXAS
Austin
Corpus Christie
Dallas
El Paso
Fort Worth
Houston
Lubbock
San Antonio

UTAH
Salt Lake City

VIRGINIA
Alexandria
Richmond

WASHINGTON
Seattle
Spokane

WEST VIRGINIA
Barboursville

WISCONSIN
Milwaukee

DUNHAM-BUSH, INC. • West Hartford, Connecticut 06110, U.S.A.

61398-10M-1174A-1.278B

one of The Signal Companies

Exhibit D-12

FORM NO. 3440B

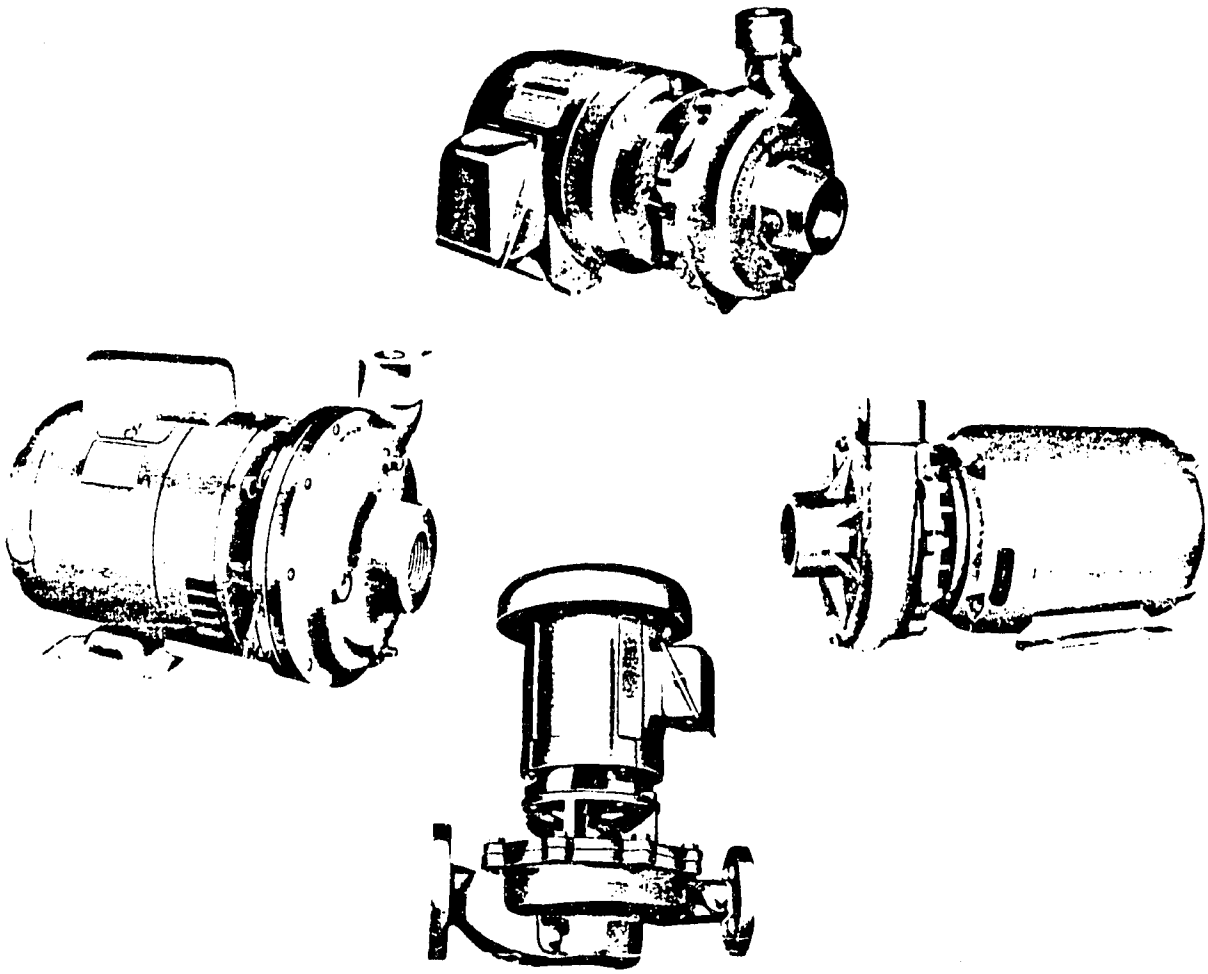

DUNHAM-BUSH

CENTRIFUGAL PUMPS
TYPE A5, A7, A9 AND PM7

Installation, Operation and Maintenance Instructions

536

CENTRIFUGAL PUMPS
TYPE A5, A7, A9 AND PM7

INDEX

DESCRIPTION	PAGE
INTRODUCTION	1
SECTION I INSTALLATION	
LOCATION	1
FOUNDATION	1
MOUNTING	1
PIPING	1
SUCTION PIPING	1
DISCHARGE, PIPING	2
PIPING FOR SPARE PUMPS	2
INSTALLING PUMP	2
SECTION II OPERATION	
PUMP STARTING	2 - 3
OPERATING AT REDUCED CAPACITY	3
OPERATING ROUTINE	3
STOPPING	3
SECTION III MAINTENANCE	
A5 PUMP DISASSEMBLY AND ASSEMBLY	3 - 4
A9 SERIES 'A' PUMP DISASSEMBLY AND ASSEMBLY	4 - 5
A7/PM7 DISASSEMBLY AND ASSEMBLY	5 - 7
A7A/PM7A DISASSEMBLY AND ASSEMBLY	7 - 9
SECTION IV TROUBLE SHOOTING, NOMENCLATURE, ORDERING PROCEDURE AND PARTS LIST	
TROUBLE SHOOTING	9
NOMENCLATURE	10
ORDERING PROCEDURE	10
A5 PUMPS AND PARTS LIST	
1/3 HP, 1/2 HP, AND 3/4 HP	11
1 HP, 1½ HP AND 2 HP	12
A9 SERIES 'A' PUMPS AND PARTS LIST	
1/2 HP, 3/4 HP AND 1 HP	13
1 1/2 HP	14
2 HP	15
3 HP	16
5 HP	17
7 1/2 HP	18
10 HP AND 15 HP	19
A7 PUMPS AND PARTS LIST	
3/4", 1 1/4" AND 1 1/2"	20
2" AND 2 1/2"	21
PM7 PUMPS AND PARTS LIST	
1", 1 1/4" AND 1 1/2"	22
2" AND 2 1/2"	23
A7A PUMPS AND PARTS LIST	
3/4", 1 1/4" AND 1 1/2"	24
PM7A PUMPS AND PARTS LIST	
1", 1 1/4" AND 1 1/2"	25

531

INTRODUCTION

The Dunham-Bush Type A5, A7 and A9 are radially split, single stage, motor mounted centrifugal pumps. The PM7 is a radially split, single stage, close coupled pipe mounted centrifugal pump. These pumps are supplied with an end face mechanical shaft seal installed, which is especially selected for reliability and life on the particular pump application. All pumps are supplied as complete units including motor.

SECTION – 1
PUMP INSTALLATION

A. LOCATION

1. For satisfactory operation of any centrifugal pump it is necessary that adequate "Net Positive Suction Head" (NPSH) be available at the pump suction connection (NPSH is the total head in feet absolute, less the vapor pressure of the liquid in feet absolute, available to the pump). For this reason the pump should be located as close to the liquid source as possible.
2. Adequate head room should be provided for the use of installing equipment.
3. Adequate space should be allowed for inspection during pump operation.

B. FOUNDATION

1. The foundation must be solid and substantial enough to absorb mechanical vibration. In general concrete foundations are the most satisfactory and when used, bolts should be supplied which are imbedded for pump footing. Bolts should be long enough to insure proper tightening (minimum of six (6) threads should protrude beyond nut), and it is recommended that each bolt (standard or "J" type) be fitted with a pipe sleeve that is approximately 2½ times the bolt diameter and whose length is twice the inside diameter of the sleeve. When using a standard bolt (figure 1) a washer should be used to support the head of the bolt in the sleeve. After the concrete foundation has been poured, the pipe sleeve remains in place allowing for alignment with the holes in the motor feet.
2. When "J" type bolts (figure 2) are used the same procedure is used except that no washer is needed.
3. If the foundation has been laid, holes may be drilled and expansion bolts used to anchor the pump to the foundation.

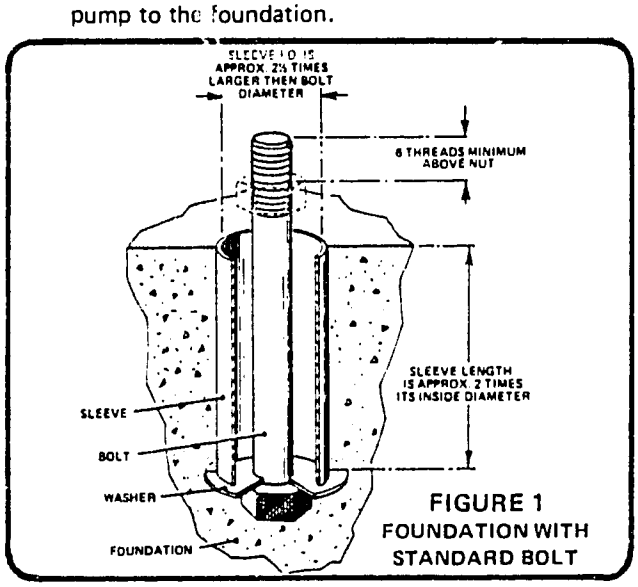

FIGURE 1
FOUNDATION WITH STANDARD BOLT

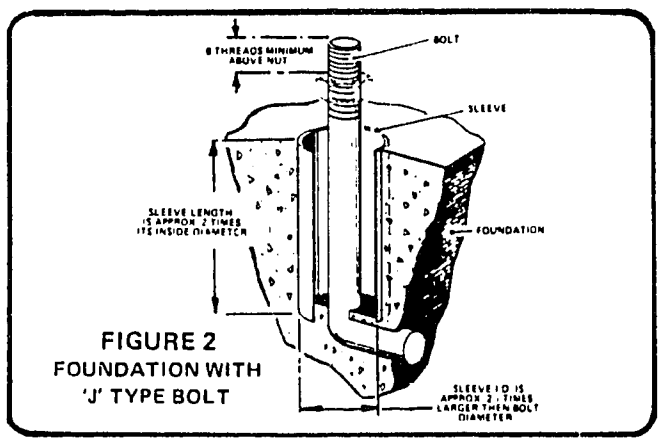

FIGURE 2
FOUNDATION WITH 'J' TYPE BOLT

C. MOUNTING PUMP

Foot Mounted

1. Uncrate the pump leaving all instructions attached and install at its' place of operation.
2. Locate the leveling plates and shims at each foundation bolt.
3. Level the motor perpendicular to shaft, shimming as necessary.
4. Level the motor parallel to shaft and tighten the nuts on the foundation bolts evenly.

Pipe Mounted

1. Horizontal Lines – Normally the pump is mounted with the motor perpendicular to the ground with the motor end up. The piping must be adequate to support both the piping and pump.
2. Vertical Lines – The motor will be parallel to the floor and may require additional support other than that offered by the piping.

D. PIPING

1. Both suction and discharge piping should be as short and as direct as possible. There should be as few fittings and bends as possible. Bends, where used should be of the long radius variety.
2. Piping should be supported near the pump to prevent strains from being transmitted to the pump, and piping at the pump suction and discharge should be as large or larger than the openings in the pump.
3. Gate valves and pressure gages should be installed in both the suction and discharge line to facilitate pump maintenance and performance checks.

E. SUCTION PIPING

1. Suction piping must be free of vapor trapping pockets
2. In horizontal piping leading to the pump only eccentric-reducers should be used (See Fig. 3 and 4).
3. The suction pipe must be free from air leaks and provisions should be made for the expansion of hot lines.

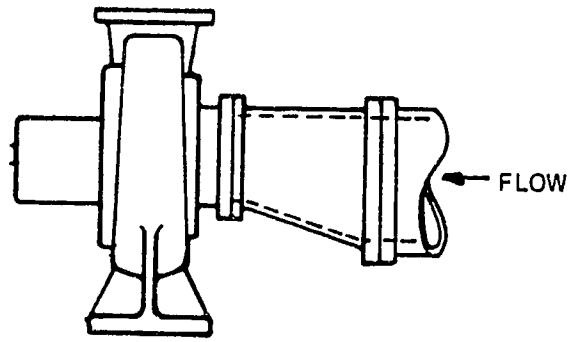

FIGURE 3
CORRECT SUCTION PIPING FOR ECCENTRIC REDUCER

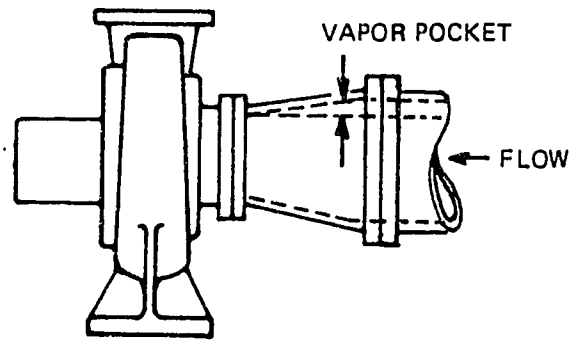

FIGURE 4
INCORRECT SUCTION PIPING FOR ECCENTRIC REDUCER

4. It is recommended that a strainer be installed near the pump suction inlet to catch scale or other foreign material. A pressure gage installed on each side of the strainer can be used for measuring the pressure drop across the strainer.

5. If a strainer or foot valve is to be used on the inlet end of the suction line, the free area through the strainer or valve should be approximately 2½ to 4 times the area of the suction pipe.

F. DISCHARGE PIPING

1. On some installations, a check valve and balancing cock in addition to a gate valve may be required in the discharge piping. The check valve would be used to prevent liquid from running back through the pump in case of failure of the motor. The balancing cock is used to control the pumps' operating capacity by providing a changeable control in the piping system. The gate valve would be used in priming, starting and shutting down the pump.

2. When valves are required in the discharge line, they should be located as near as possible to the pump.

3. In some applications when the pump may be operated with zero flow, provisions should be made for recirculating a portion of the liquid from the discharge to the suction of the pump to reduce the possibility of overheating.

G. PIPING FOR SPARE PUMPS

Spare pumps in high temperature service should be piped so that hot liquid from the discharge of the operating pump circulates continuously through a by-pass to the spare pump and back to the suction of the operating pump. This can greatly reduce thermal shock when the spare pump is started.

H. INSTALLING PUMP

1. Make up the piping to the suction and discharge connections of the pump. All piping must be properly supported by hangers and not by the pump. PM7 pumps must be supported within 18" of pump suction and discharge connections.

2. Wire the pump motor for the voltage required as specified on the wiring diagram located on the motor nameplate, or in cover of the motor terminal box. All wiring must be in accordance with local regulations. If the motor is damaged due to improper wiring, the guarantee is void.

SECTION – 2
PUMP OPERATION

A. STARTING PUMP

1. Open the suction and discharge valves to the pump. These pumps have a mechanical seal and must NOT be run dry. Open the cock at the top of the pump case to vent out any air.

   NOTE: a. If the pump is above the level of the liquid to be pumped, close the discharge valve. If the pump is below the level of the liquid, open the discharge valve 1½ to 2 turns.

   b. Prime the pump. All air and vapor must be removed. The pump case and suction pipe must be filled with liquid before the pump is started.

2. Rotate the pump shaft by hand (if possible) to be sure the pump is not binding. On some models the end of the motor shaft has a screwdriver slot. It may be used to turn the shaft. A check for sticking of the shaft should also be made after a prolonged pump shutdown.

3. Start the pump and check for correct rotation according to the arrow on the case. If it is running in the

wrong direction on three phase current, change any two leads to the motor. You must disconnect the power before changing the wiring.

4. Lack of capacity and head may indicate the passageways of the pump impeller have become clogged with foreign matter or that the motor speed is low. If speed of the motor is low, the wiring connections at the motor should be checked for miswiring or looseness. If the pump is wired for 460 volt current, but is actually operating on 230 volt current, the motor will never come up to proper speed and may burn out. If low voltage occurs, notify local power company. Slugging of air is another cause of low capacity and head on a closed system. Be sure the system is properly vented of all air – See further notes under Trouble Shooting – Section IV.

WARNING - DO NOT ATTEMPT TO OPERATE PUMP WITH SUCTION VALVE CLOSED!

5. As soon as the pump is up to full speed, slowly open the discharge valve until it is completely open. Do not let the pump run with the discharge valve closed.

6. Check the pressure gages on each side of the strainer in the suction line. A pressure drop across the strainer indicates it is becoming clogged with dirt or scale. In this case, the pump should be shut down and the strainer screen cleaned or replaced. A clogged strainer can cause damage to the pump.

7. The pump should be shut down if motor bearings overheat, if there is undue vibration or noise, or if it fails to develop its rated discharge pressure at operating speed.

B. OPERATING AT REDUCED CAPACITY

If the pump is connected to a constant speed driver or motor, the capacity of the pump can be reduced by throttling the discharge. When throttling the discharge, a by-pass connection may be used to by-pass sufficient liquid back to the suction inlet to prevent overheating.

C. OPERATING ROUTINE

1. Check the bearing temperatures periodically. If there is overheating, check the motor to insure adequate lubrication. Normal inspection consists of periodic checks of motor lubrication.

2. Lubricating the pump motor should be done in accordance with manufacturer's recommendations.

3. Check all seals for leakage.

4. Check the suction and discharge pressure gages. If the differential pressure drops critically, shut down the pump at once.

D. STOPPING

The pump should be shut down rapidly to keep liquid in the pump and to prevent the parts from seizing. After stopping the driver, close the discharge valve and then the inlet valve, in that order. When pumps are operating in parallel, it is sometimes necessary to close the discharge valve immediately after stopping the driver to prevent reverse rotation. If the pumps are to remain idle under freezing conditions, precautions, such as draining the case, should be taken to avoid damage.

SECTION – 3
MAINTENANCE INSTRUCTIONS

A. A5 PUMP DISASSEMBLY AND ASSEMBLY
(Ref. Fig. 5 & 6)

1. Disconnect the power to pump.

2. Close the valves in suction and discharge lines or drain the system.

3. Remove the 8 hex head screws (11) holding the head (7) to the case (1). Disassemble the head (7) from the case (1) by sliding the motor back.

4. Remove the case gasket (5) and clean the gasket surfaces on the case (1) and head (7).

5. Remove the plug covering the shaft end in motor.

6. Hold motor shaft from turning by using a large bladed screwdriver in slot of motor shaft and remove the impeller nut (3) by turning it counter clockwise.

7. Using a screwdriver in the shaft slot remove the impeller (2) and stop washer (4) from shaft by turning it counter clockwise.

8. Remove the head (7) and mechanical seal (6) from the shaft by first removing 4 hex cap screws (10) and then pulling the head (7) from the motor (8).

9. Remove slinger (9) from the shaft.

10. Remove stationary mechanical seal (6a) from the head (7).

11. Clean the motor shaft with solvent and inspect it for the scrapes, gouges and scratches. Lightly polish the shaft if necessary to remove blemishes.

12. Lightly lubricate the O.D. of the stationary member of the new seal. With the seal seat towards the impeller, press the seal firmly into the head recess. Make sure that the seat is level and square.

NOTE: Extreme caution must be exercisad not to scratch, gouge or otherwise mar the sealing surface of the mechanical seal or leakage will likely result.

13. Replace the slinger (9) on the shaft.

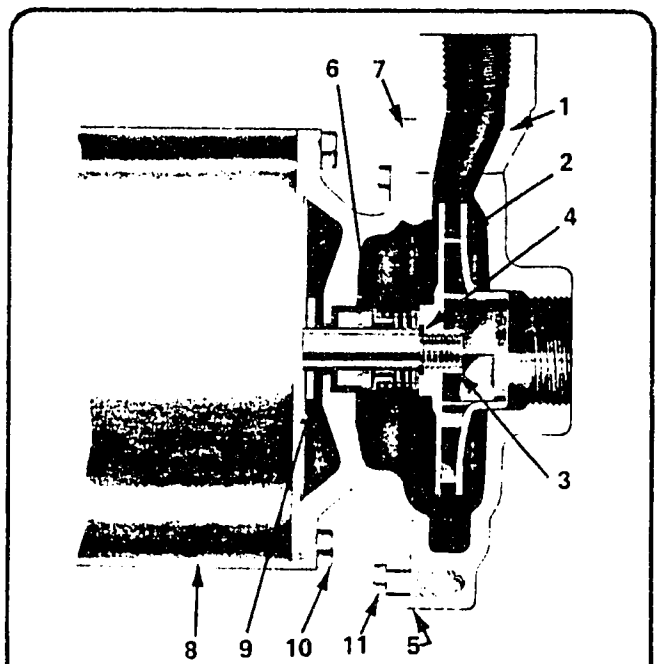

FIGURE 5
A5 PUMP

For Additional Information
On Seal (6)
Refer to Figure 6

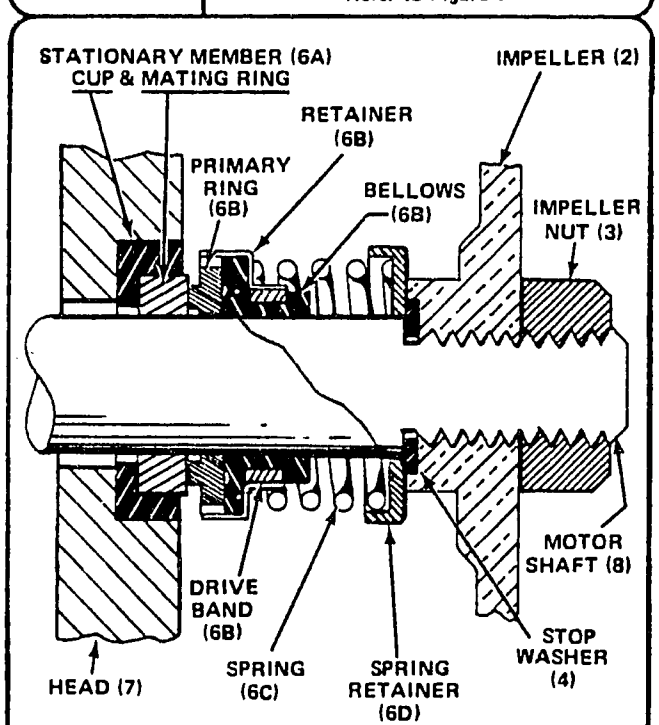

FIGURE 6
MECHANICAL SHAFT SEAL
FOR A5 PUMPS

14. Mount the head (7) on the motor (8) by using four hex head cap screws (10).

15. To assemble mechanical seal rotating element (6) onto the shaft:

    a. Lightly lubricate the I.D. of new seal boot (6B) and slide it over shaft with the carbon seal face towards the stationary seal face until seal faces meet.

    b. Place spring (6C) on the rotating member (seal boot 6B) so it seats properly against the shoulder.

    c. Place spring retainer (6D) against the spring. Be sure the rolled edge faces toward the spring.

16. Replace the stop washer (4) and screw the impeller (2) onto the shaft while holding shaft stationary with screwdriver placed in motor shaft slot. The stop washer has a radius machined on one of the outer diameter edges. The washer is to be assembled with this edge against the impeller. Make sure impeller is snugged up tight. Use a screwdriver to pry the spring retainer (6D) away from the impeller (2) to be sure that the retainer isn't caught between the shaft shoulder and impeller.

17. Replace impeller nut (3), snug nut up tight.

18. Place the gasket (5) on the head (7) and assemble both to the case (1) using 8 hex head cap screws (11).

19. Remount motor to base.

20. Open valves to pump and refill the system and check for leaks.

21. Reconnect power to pump.

B. A9 PUMP SERIES A DISASSEMBLY AND ASSEMBLY (Ref. Fig. 7 & 8)

1. Disconnect the power to pump.

2. Close the valves in suction and discharge lines or drain the system.

3. Remove the 12 hex head screws (13) holding the head (8) to the case (1). Disassemble the head (8) from the case (1) by sliding the motor back.

4. Remove impeller nut (3) by turning it counter clockwise.

5. Remove impeller (2) and its key (4) from the shaft.

6. To remove head (8), mechanical seal (7), gasket (5) and sleeve (11) remove the 4 hex head cap screws (14) and pull the head (8) from motor (9). Caution must be exercised not to scratch, mar or gouge the sleeve during this operation.

7. Remove slinger (10) and shield (12) from shaft.

8. Remove the mechanical seal stationary seat (7a) from the head (8).

9. Remove the gasket (6) from head (8) and clean gasket surfaces on both the case (1) and head (8).

10. Clean motor shaft with solvent.

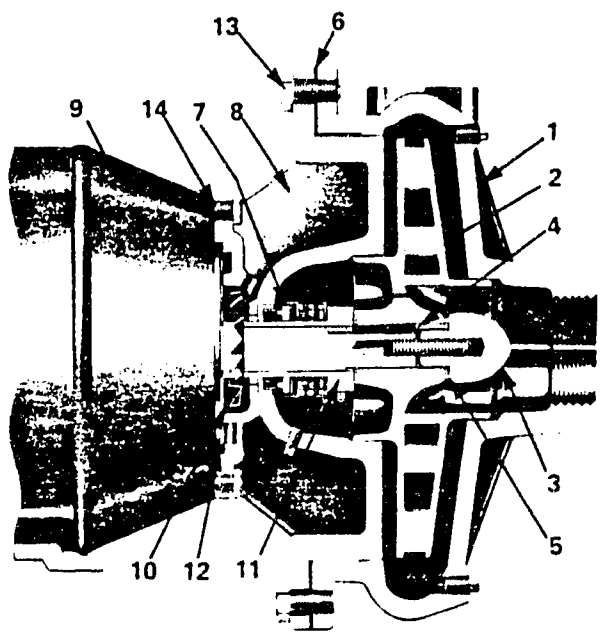

FIGURE 7
A9 PUMP

For Additional Information
On Seal (7)
Refer to Figure 8.

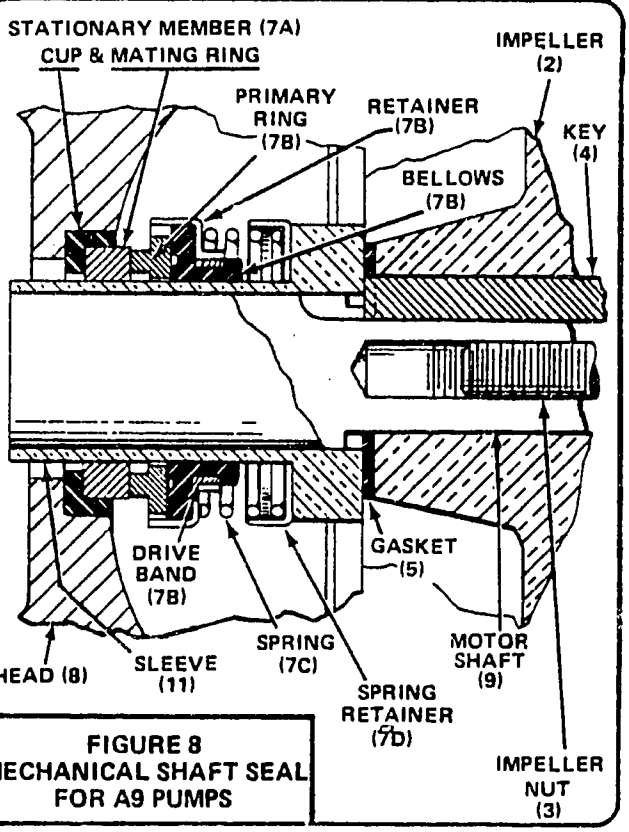

FIGURE 8
MECHANICAL SHAFT SEAL
FOR A9 PUMPS

11. Lightly oil O.D. of new seal stationary seat (7A). With the sealing face towards impeller, press the seal seat firmly into the head recess, being sure the seat is level and square.

Caution: Extreme care must be exercised not to scratch, mar or gouge the sealing face of the stationary seal or leakage will occur.

12. Replace shield (12) and slinger (10) onto shaft.

13. Mount the head (8) to the motor (9) by using 4 hex head cap screws (14).

14. To assemble mechanical-seal-rotating element (7B, C & D) onto the sleeve (11):

    a. Slip spring retainer (7D) over sleeve (11) with the bent edge facing away from the shoulder.

    b. Place spring (7C) over sleeve.

    c. Lightly lubricate I.D. of new seal boot (7B) and slide it over the sleeve with the carbon seal face away from sleeve shoulder.

15. Place a light coat of Teflon paste on I.D. of sleeve and slide it over the shaft until seal faces butt together firmly and squarely.

16. Brush both sides of gasket (5) with Teflon paste and position it on the sleeve (11).

17. Insert key (4) in keyway and replace the impeller (2) on shaft.

18. Place a small amount of Teflon paste on flat side of impeller nut (3) and replace it on the shaft. Turn the impeller to check its alignment.

19. Replace the gasket (6) and assemble the pump head (8) to the pump case (1) using 12 hex head cap screws (13).

20. Remount the motor to base.

21. Open the valves to pump and refill the system and check the pump for leaks.

22. Reconnect power to the pump.

C. A7/PM7 PUMP DISASSEMBLY AND ASSEMBLY (Ref. Fig. 9 & 10) WITH JM FRAME MOTOR

1. Disconnect power to pump.

2. Close the valves in suction and discharge lines or drain the system.

3. (PM7 Only). Remove the seal flush piping line (8 & 9) connected between the head (7) and pump case (11).

4. Remove 8 hex head cap screws (1), holding the head (7) to the case (11) and remove motor head assembly.

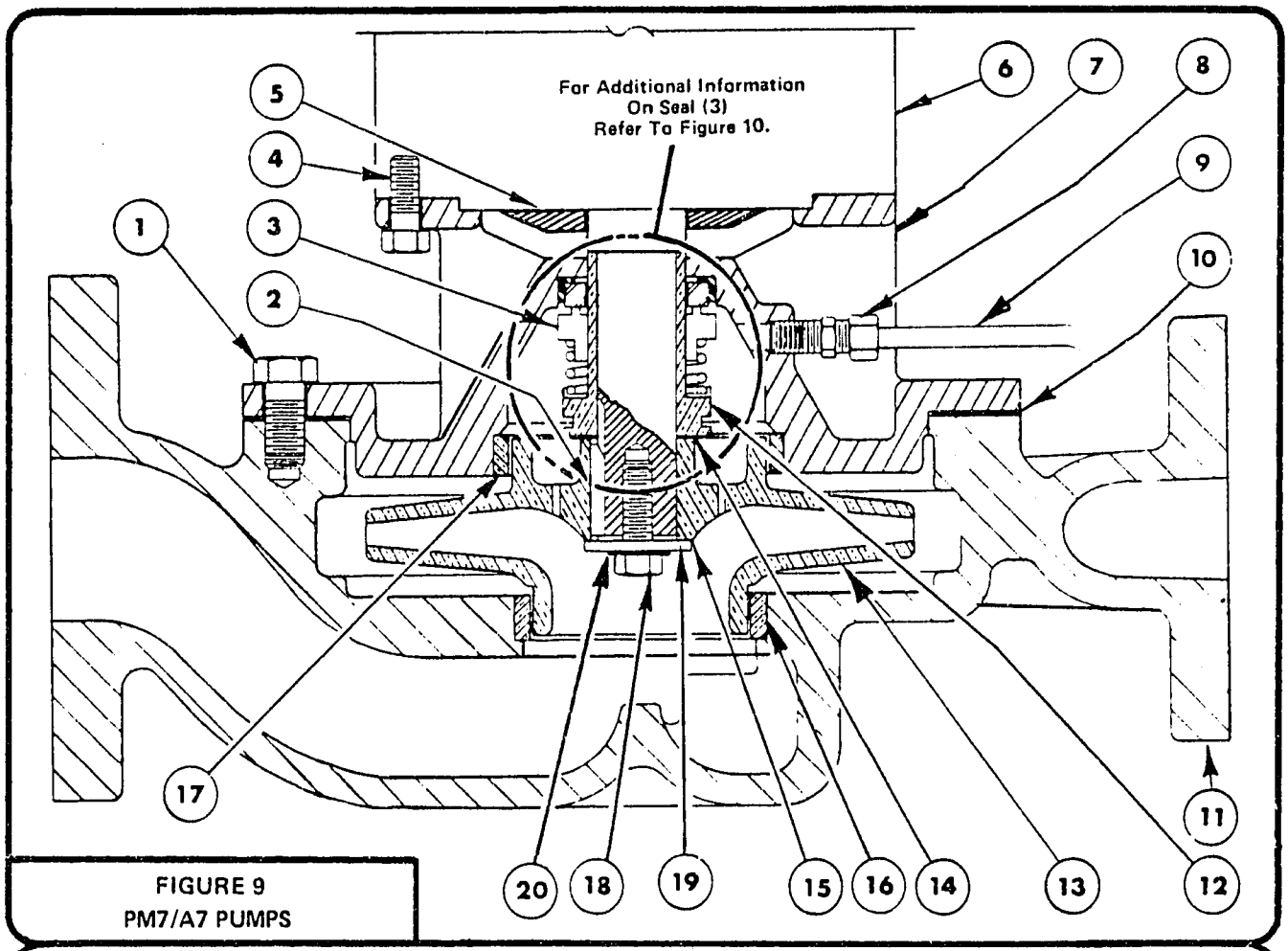

FIGURE 9
PM7/A7 PUMPS

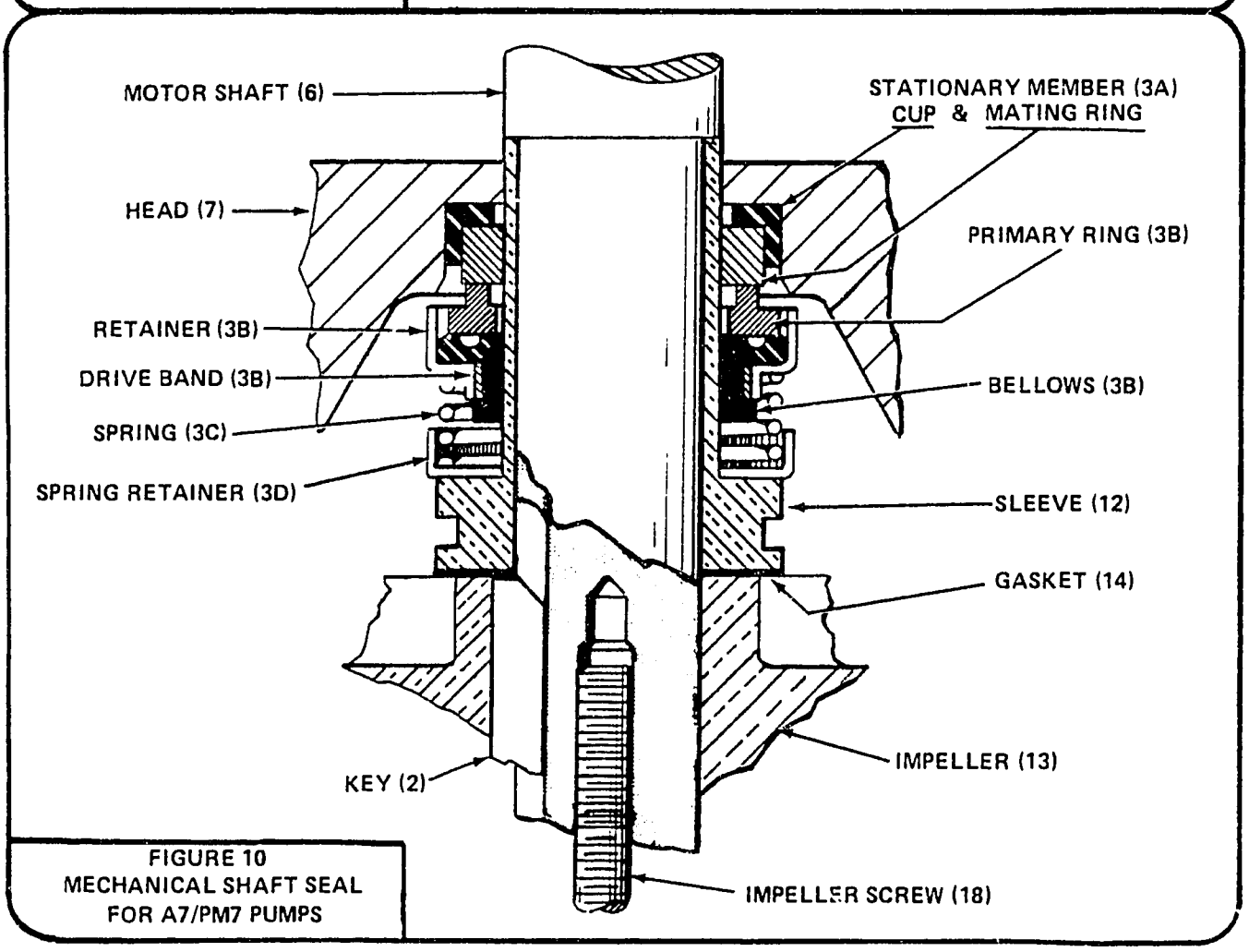

FIGURE 10
MECHANICAL SHAFT SEAL
FOR A7/PM7 PUMPS

543

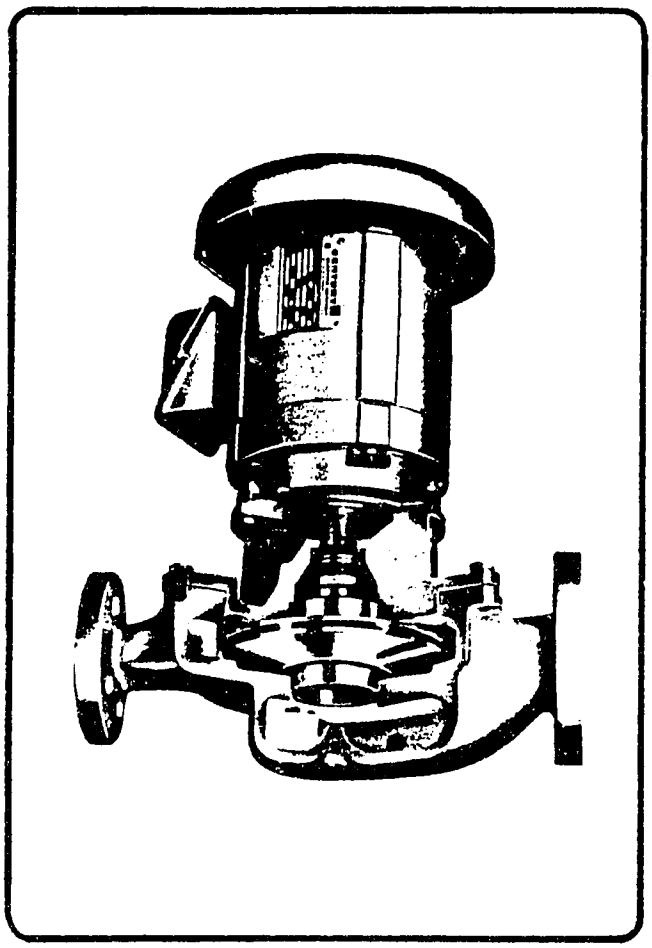

5. Remove the case gasket (10) and clean the gasket surfaces of both the head (7) and case (11).

6. Remove the impeller screw (18) by turning it counter clockwise and remove washers (19) and (20) and the gasket (15). Clean the gasket surfaces.

7. Remove the impeller (13) and its key (2) from the shaft motor.

8. Remove the mechanical seal (3) and sleeve (12) from the shaft. Remove gasket (14) from either the sleeve or impeller and clean the gasket surfaces.

9. Remove head (7) from the motor (6) by removing 4 hex head cap screws (4).

10. Clean the motor shaft with solvent.

11. Remove the stationary member (3A) of the mechanical seal from the head (7).

12. Lightly lubricate the O.D. of new mechanical seal stationary seal (3A) and press it into the recess of the head (7). Be sure that the seal is level and square.

    Caution: Extreme care must be exercised not to scratch, mar or gouge the sealing face of the stationary seal or leakage will occur.

13. Assemble the head (7) onto the motor (6) using 4 hex head cap screws (4).

14. Assemble the rotating seal elements onto the sleeve (12).

    a. Slip spring retainer (3D) over sleeve (12) with the bent edge facing away from the shoulder.

    b. Place spring (3C) over sleeve.

    c. Lightly lubricate I.D. of new seal boot (3B) and slide it over sleeve with the carbon seal face away from sleeve shoulder.

15. Place a light coat of Teflon paste on I.D. of the sleeve and slide it over the shaft until seal faces butt together firmly and squarely.

16. Brush both sides of gasket (14) with Teflon paste and position it on the sleeve (12).

17. Replace key (2) in keyway and slide impeller (13) onto shaft.

18. Brush both sides of gasket (15) with Teflon paste and place on impeller. Place the sealing washer (19) and washer (20) on the impeller cap screw (18) and tighten onto the shaft.

19. Place gasket (10) on head (7) and assemble it to the case (11) using 9 hex head cap screws (1).

20. Replace the seal flush piping (8 & 9).

21. Open the valves to the pump or refill system and check pump for leaks.

22. Reconnect power to pump and check again for leaks.

D. A7A/PM7A PUMP DISASSEMBLY AND ASSEMBLY (Ref. Fig. 11 & 12) WITH JET PUMP MOTOR

1. Disconnect power to pump

2. Close the valves in the suction and discharge piping or drain the system.

3. (PM7A Only) Remove the seal flush piping line (8 & 9) between the head (7) and case (11).

4. Remove 8 hex head cap screws (1) holding the head (7) to case (11) and remove the motor-head assembly.

5. Remove the case gasket (10) and clean the gasket surfaces of both the head (7) and the case (11).

6. Remove the impeller (12) and the impeller nut (15) by turning counter clockwise. Remove the impeller nut (15) from the impeller (12).

7. Remove loose mechanical seal parts from shaft.

8. Loosen 4 hex screws (4) between the motor and head and remove the retainer clips (3). Remove head (7) from motor (6).

9. Remove slinger (5) from the motor shaft and clean shaft with a solvent. Inspect it for scratches and lightly polish it if necessary to remove blemishes.

10. Remove mechanical stationary seal (2A) from head (7).

11. Lightly lubricate the O.D. of a new mechanical stationary seal (2A) and press into recess of head (7) making sure that the seal is level and square.

544

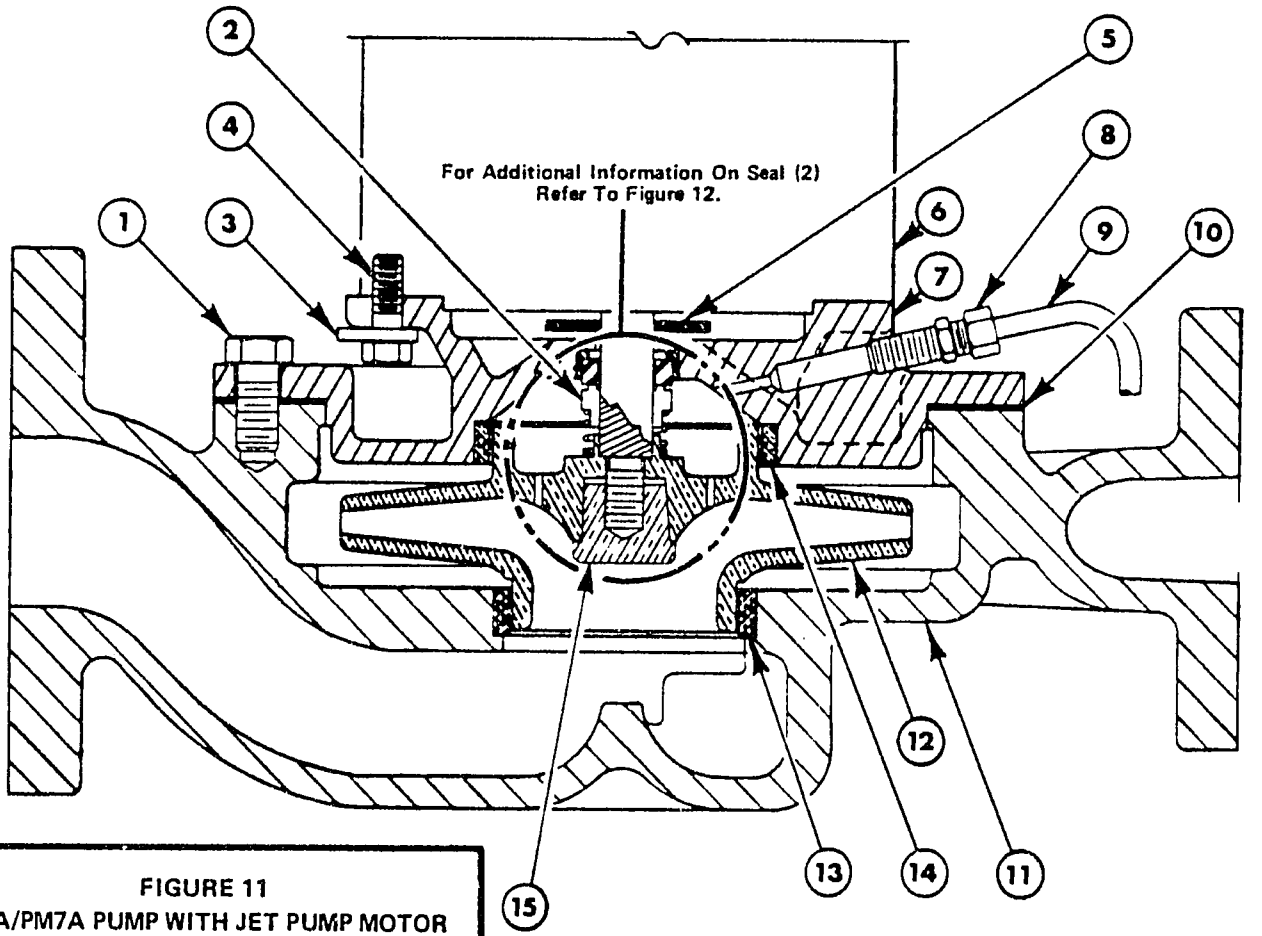

FIGURE 11
A7A/PM7A PUMP WITH JET PUMP MOTOR

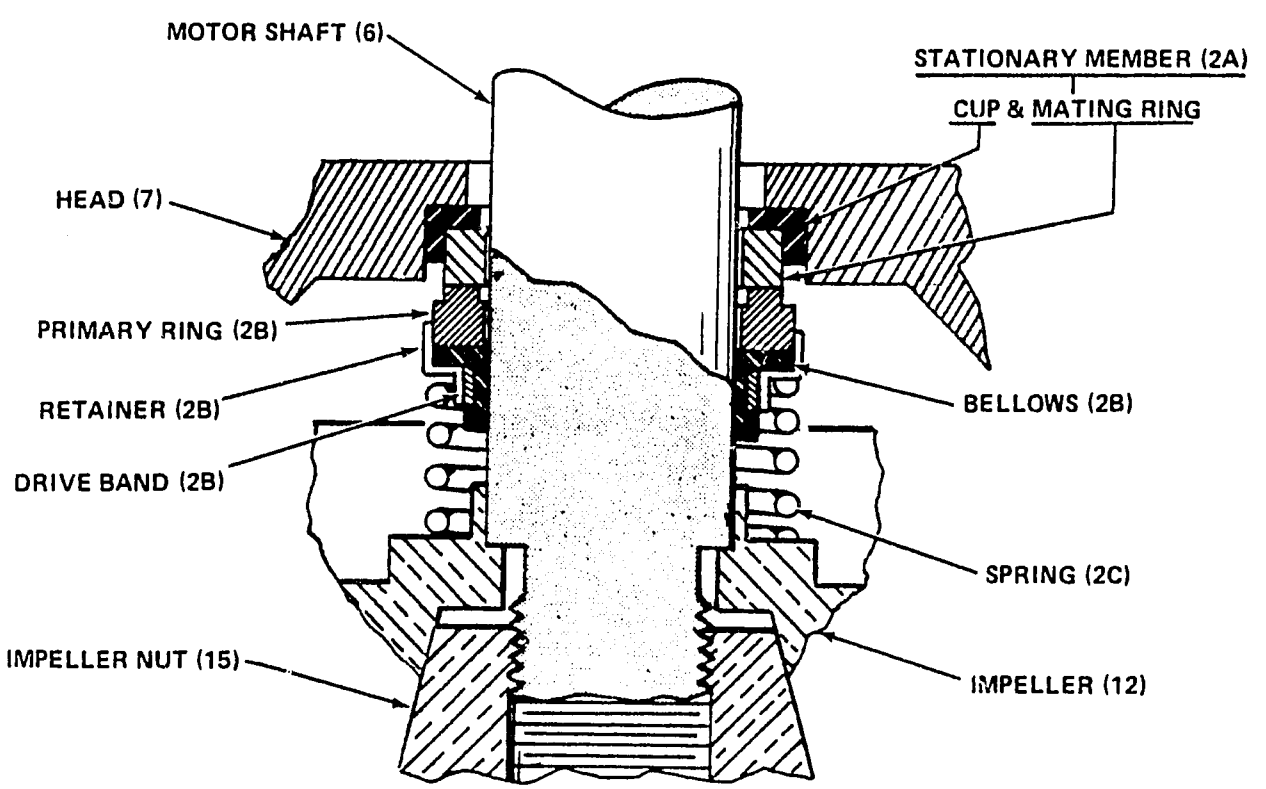

FIGURE 12
MECHANICAL SHAFT SEAL
FOR A7A/PM7A PUMPS

545

11. (Continued)

Caution: Extreme care must be exercised not to scratch, mar or gouge the face of the stationary seal as seal leakage will result.

12. Replace slinger (5) on the shaft and assemble the head (7) to the motor (6) by replacing the 4 retainer clips (3) on shank of cap screws (4). Tighten the cap screws.

13. Assemble rotating seal elements onto shaft.
    a. Lightly lubricate the I.D. of new seal boot (2B) and slide it over the shaft with the carbon seal face towards the stationary seal face.
    b. Place spring (2C) over shaft.

14. Replace impeller (12). Be sure the spring (2C) is seated properly against the impeller face.

15. Replace the impeller nut (15) and torque it to 15 lbs.

16. Place the gasket (10) on head (7) and assemble it to the case (11) using 8 hex head screws.

17. Replace the seal flush line (8 and 9).

18. Open valves to the pump and refill the system. Check the pump for leaks.

19. Reconnect power to pump and check again for leaks.

SECTION IV - TROUBLE SHOOTING

Operating troubles and their probable causes are as follows:

A. INSUFFICIENT OR NO DISCHARGE

1. Wrong direction of rotation.
2. Pump not primed.
3. Suction line is not full of liquid.
4. Air or vapor in suction line.
5. Suction pipe not submerged enough.
6. Available NPSH not sufficient.
7. Pump not up to rated speed.
8. Too much system head.

B. INSUFFICIENT PRESSURE

1. Wrong direction of rotation.
2. Suction line not full of liquid.
3. Air or vapor in liquid.
4. Air leaks in suction line.

B. INSUFFICIENT PRESSURE (Continued)

5. Suction line not submerged enough.
6. Available NPSH not sufficient.
7. Pump not up to rated speed.
8. Mechanical defects:
    a. Impeller damaged.
    b. Internal leakage (clearances).

C. CAVITATION AND NOISE

1. Air or gas in liquid.
2. Suction line not filled with liquid.
3. Suction line not submerged enough.
4. Available NPSH not sufficient.

D. PUMP LOSES SUCTION AFTER STARTING

1. Suction line not full of liquid.
2. Air leaks in suction line.
3. Air or vapor in liquid.
4. Air or vapor in suction line.
5. Suction line not submerged enough.
6. Available NPSH not sufficient.

E. EXCESSIVE POWER CONSUMPTION

1. Speed too high
2. Insufficient head.
3. Mechanical Defects:
    a. Shaft bent.
    b. Rotating element dragging.
    c. Piping improperly supported.

F. VIBRATION

1. Suction line not full of liquid.
2. Air or vapor in suction line.
3. Worn or loose motor bearings.
4. Rotating element out of balance.
5. Shaft bent.
6. Foundation not rigid.
7. Vibration in the driver.
8. Wrong location of control valve.
9. Piping improperly supported.

NOMENCLATURE

10 HP - 2½ - A9 - D 65 S - 2 - A

- **10 HP** — HORSEPOWER
- **2½** — DISCHARGE (IN INCHES)
- **A9** — TYPE MODEL
- **D** — IMPELLER STYLE
- **65** — IMPELLER DIAMETER
  - **6** — INCHES (6")
  - **5** — EIGHTS OF AN INCH (5/8")
  - TOTAL — 6-5/8 INCHES
- **S** — STANDARD IMPELLER
- **2** — RPM: 1 - 1750; 2 - 3450
- **A** — SERIES

ORDERING PROCEDURE

1. Complete part number and description is required when ordering.
2. When a part number is not known or shown in the parts catalog, the complete model and serial number of the unit on which the part is to be used must be given.
3. Send all orders to:

   DUNHAM-BUSH, INC., PARTS DEPT.
   811 E. MAIN ST.
   MARSHALLTOWN, IOWA, 50158

4. Prices can be found in the latest revision of Form 17448 and are for one item or kit as applicable.
5. Minimum billing is $25.00.
6. All prices are subject to federal, state, local or other taxes which may be applicable.
7. All orders requiring **special handling** will have a surcharge of $25.00 or the actual cost of this requirement whichever is greater.
8. Dunham-Bush reserves the right to substitute parts if they are interchangeable with those ordered. The invoice will reflect the cost of the actual part shipped.
9. Refer to the latest revision of Form 1278 for terms of sale.

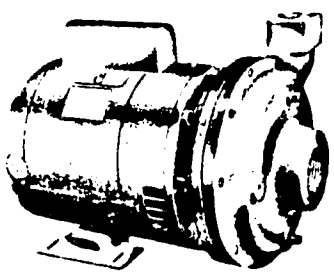

TYPE A5 PUMP

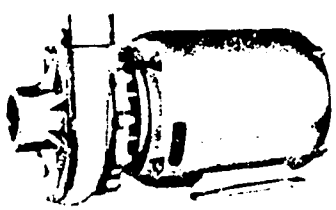

TYPE A9 PUMP

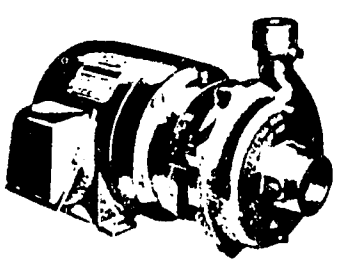

TYPE A7A AND A7 PUMPS

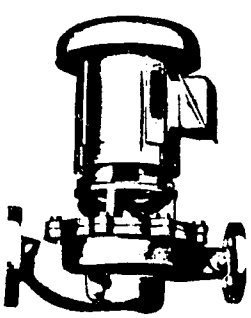

TYPE PM7 AND PM7A PUMPS

547

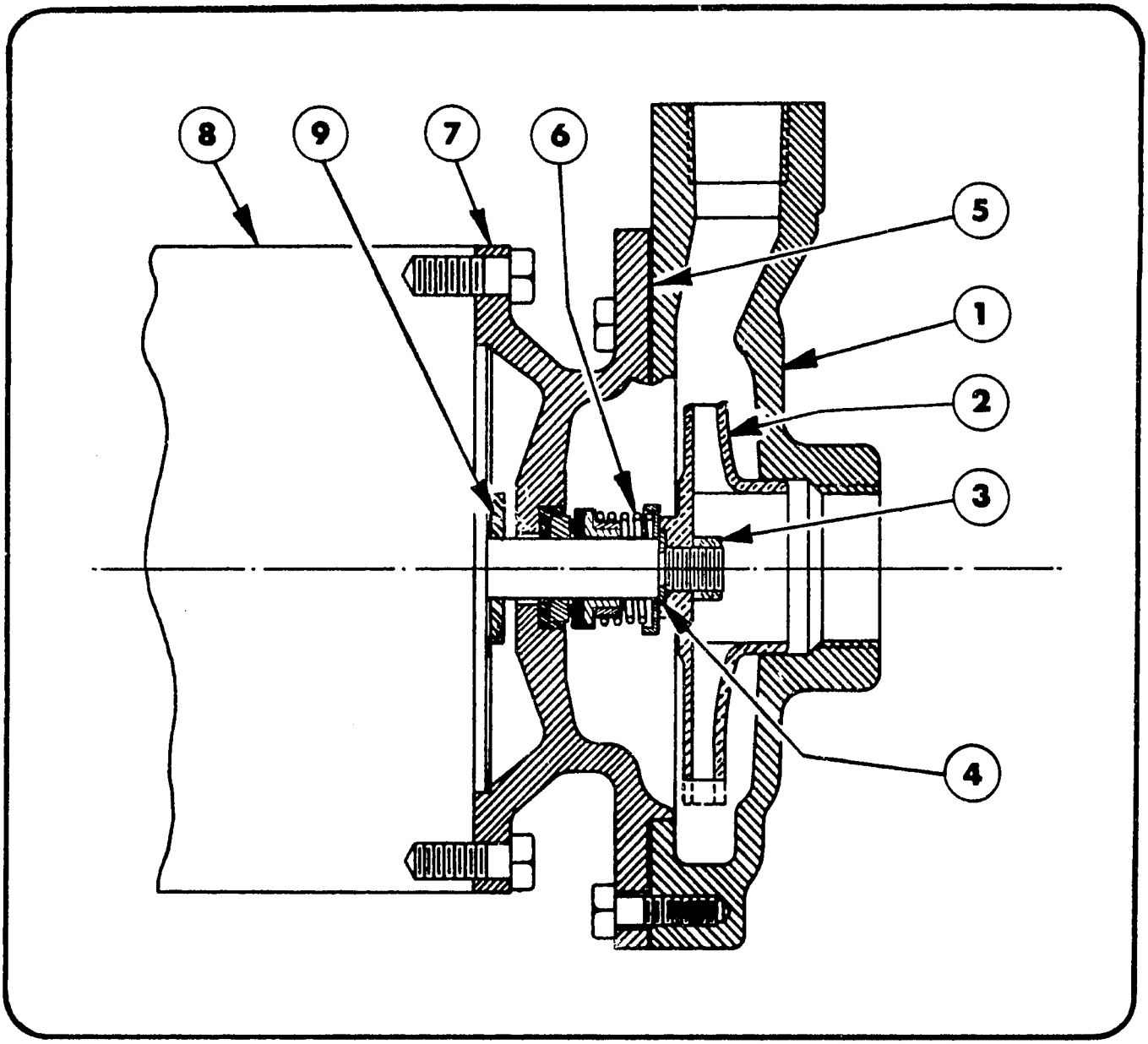

A5 PUMP AND PARTS LIST

1/3 HP, 1/2 HP AND 3/4 HP

	PART NUMBER AND DESCRIPTION	1/3 HP 1" 1φ & 3φ A5C2	1/3 HP 1 1/2" 1φ & 3φ A5C2	1/2 HP 1" 1φ & 3φ A5C2	1/2 HP 1 1/2" 1φ & 3φ A5C2	3/4 HP 3/4" 1φ & 3φ A5C2	3/4 HP 1 1/2" 1φ & 3φ A5C2
1	CASE (CAST IRON) CASE (BRONZE)	E6046 E6078	E6048 E6080	E6045 E6078	E6048 E6080	E6041 E6077	E6048 E6080
2	IMPELLER	D5197x 3 15/16"	D5203x 3 1/4"	D5197x 4 5/16"	D5203x 3 5/8"	D5193x 4 5/16"	D5203x 4 3/32"
3	NUT - IMPELLER	P-116	P-116	P-116	P-116	P-116	P-116
4	WASHER	C8709	C8709	C8709	C8709	C8709	C8709
5	GASKET-CASE *	D5352	D5352	D5352	D5352	D5352	D5352
6	SEAL-SHAFT *	472	472	472	472	472	472
7	HEAD (CAST IRON) HEAD (BRONZE)	E6042 E6081	E6042 E6081	E6042 E6081	E6042 E6081	E6042 E6081	E6042 E6081
8	MOTOR	Contact Dunham-Bush, Inc., Marshalltown, Iowa					
9	SLINGER	C8854	C8854	C8854	C8854	C8854	C8854

NOTES: 1. NON-STANDARD pump parts are not shown. When ordering repair parts, refer to page 10 of this catalog.
2. * = These parts are required when replacing shaft seal.

548

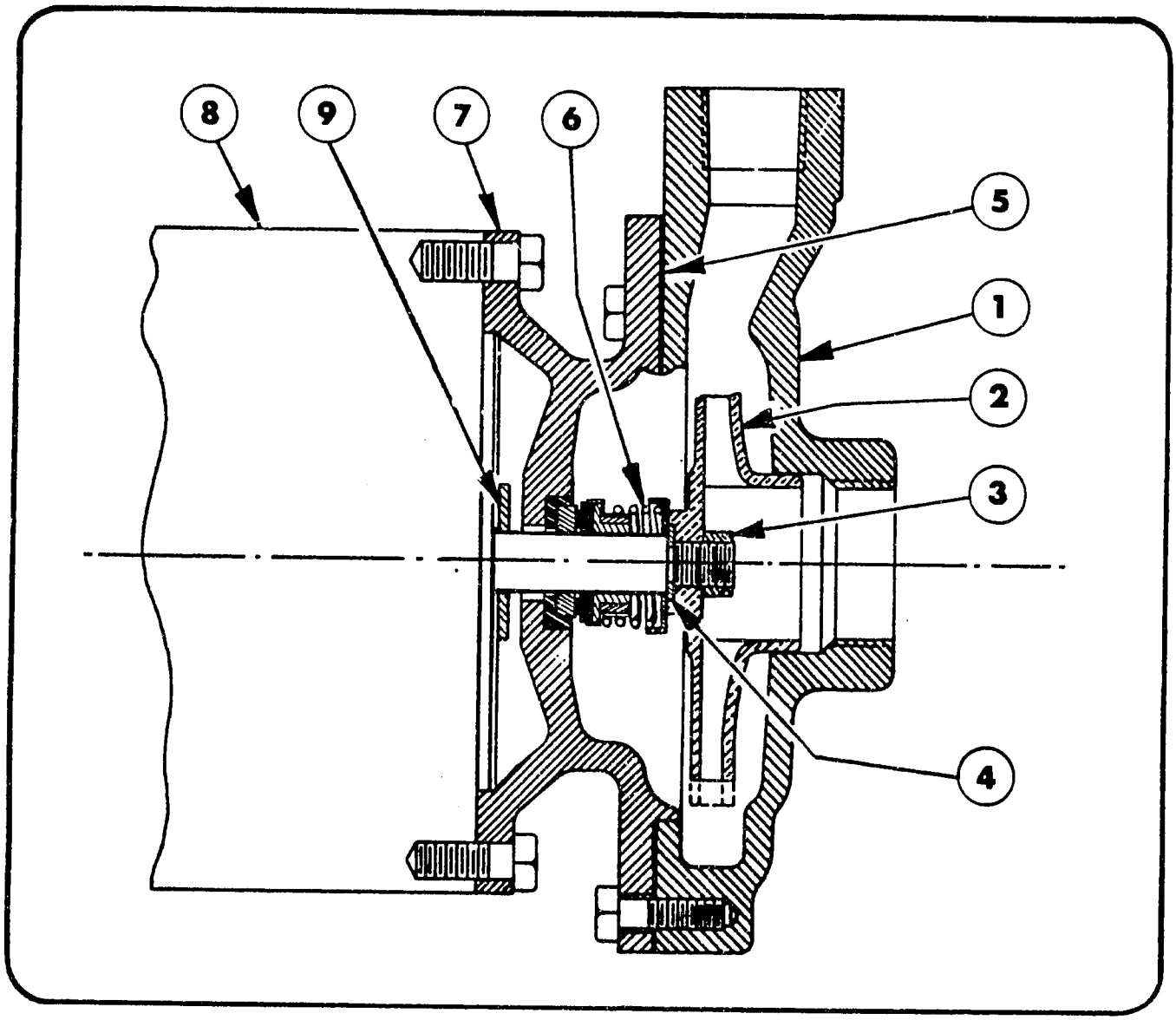

A5 PUMP AND PARTS LIST

1 HP, 1½ HP AND 2 HP

	PART NUMBER AND DESCRIPTION	1 HP ¾" 1φ & 3φ A5A2	1 HP 1½" 1φ & 3φ A5C2	1½ HP ¾" 1φ & 3φ A5A2	1½ HP 1¼" 1φ & 3φ A5B2	2 HP 1" 1φ & 3φ A5A2	2 HP 1¼" 1φ & 3φ A5B2	2 HP 1½" 1φ & 3φ A5B2
1	CASE (CAST IRON) CASE (BRONZE)	E6041 E6077	E6048 E6080	E6041 E6077	E6047 E6079	E6046 E6078	E6047 E6079	E6048 E6080
2	IMPELLER	D5193x 4 9/16"	D5203x 4 5/16"	D5193x 5"	D5199x 4 1/8"	D5195x 4 1/2"	D5199x 4 1/2"	D5202x 4 1/8"
3	NUT–IMPELLER	P-116	P-116	P-116	P-116	P-116	P-116	P-116
4	WASHER	C8709	C8709	C8709	C8709	C8709	C8709	C8709
5	GASKET–CASE *	D5352	D5352	D5352	D5352	D5352	D5352	D5352
6	SEAL–SHAFT *	472	472	472	472	472	472	472
7	HEAD (CAST IRON) HEAD (BRONZE)	E6042 E6081	E6042 E6081	E6042 E6081	E6042 E6081	E6042 E6081	E6042 E6081	E6042 E6081
8	MOTOR	Contact Dunham-Bush, Inc., Marshalltown, Iowa						
9	SLINGER	C8854	C8854	C8854	C8854	C8854	C8854	C8854

NOTES: 1. NON-STANDARD pump parts are not shown. When ordering repair parts, refer to page 10 of this catalog.
2. * = These parts are required when replacing shaft seal.

549

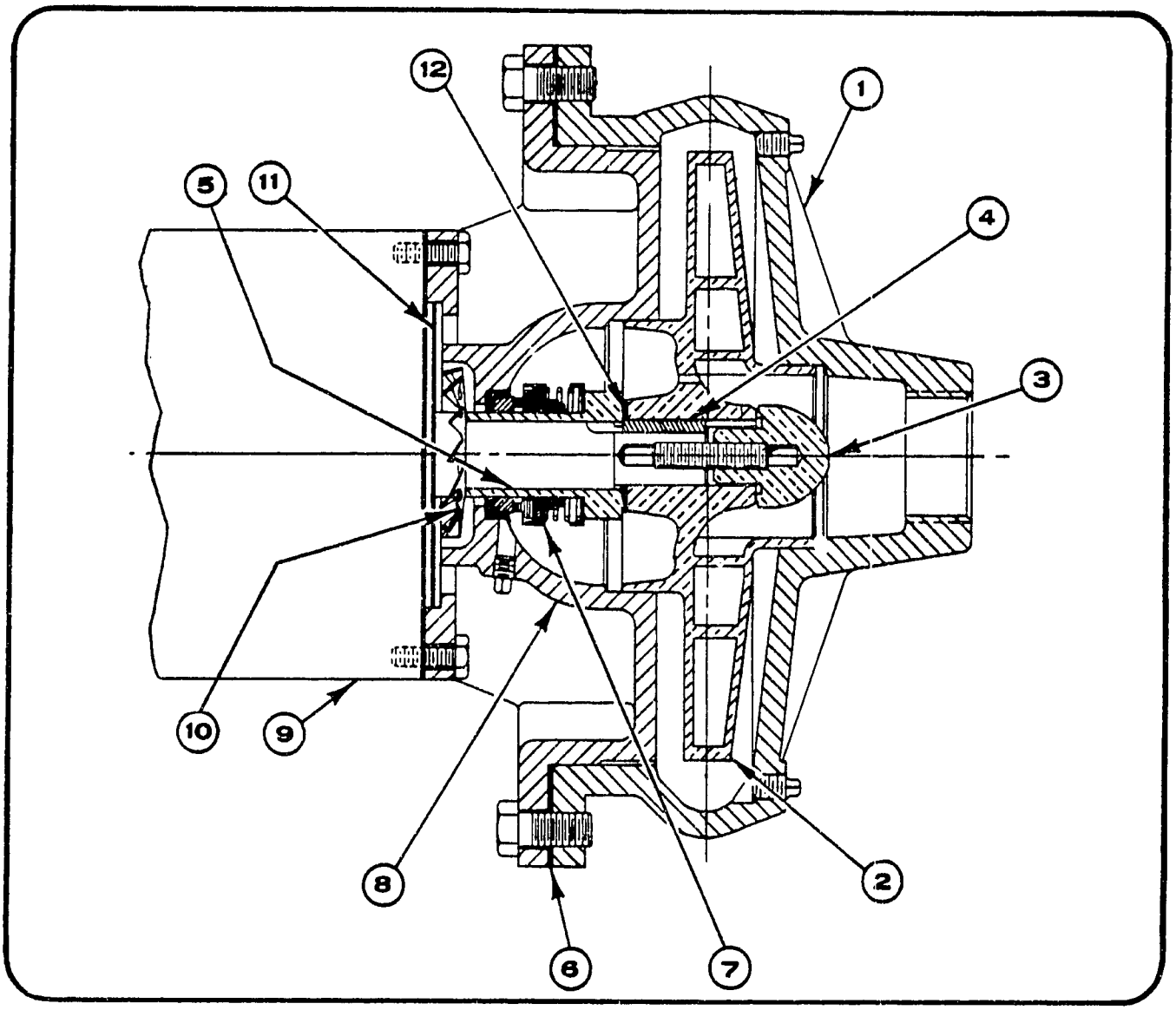

A9 PUMP AND PARTS LIST
SERIES A - ½ HP, ¾ HP AND 1 HP

	PART NUMBER AND DESCRIPTION	½ HP 1" 1φ & 3φ A9C1A	¾ HP 1" 1φ & 3φ A9C1A	¾ HP 1¼" 1φ & 3φ A9D1A	1 HP 1" 1φ & 3φ A9C1A	1 HP 1¼" 1φ & 3φ A9D1A	1 HP 2" 1φ & 3φ A9D1A
1	CASE (CAST IRON) CASE (BRONZE)	F541 D2-76	F541 D2-76	F540 D2-74	F541 D2-76	F540 D2-74	F544 D2-80
2	IMPELLER (BRONZE)	C2-3211X 6 1/16"	C2-3211X 6 3/4"	C2-3213X 4 15/16"	C2-3211X 7 5/16"	C2-3213X 5 15/16"	C2-3214X 5 3/8
3	STUD & NUT ASSEMBLY	C10035 A2-3898	C10035 A2-3898	C10035 A2-3898	C10035 A2-3898	C10035 A2-3898	C10035 A2-3898
4	KEY	C7763	C7763	C7763	C7763	C7763	C7763
5	SLEEVE *	A2-3905	A2-3905	A2-3905	A2-3905	A2-3905	A2-3905
6	GASKET *	D5450	D5450	D5450	D5450	D5450	D5450
7	SHAFT SEAL *	3179	3179	3179	3179	3179	3179
8	HEAD (CAST IRON) HEAD (BRONZE)	D2-1478 D2-1480	D2-1478 D2-1480	D2-1478 D2-1480	D2-1478 D2-1480	D2-1478 D2-1480	D2-1478 D2-1480
9	MOTOR	Contact Dunham-Bush, Inc., Marshalltown, Iowa					
10	SLINGER	C10038	C10038	C10038	C10038	C10038	C10038
11	SHIELD	C8958	C8958	C8958	C8958	C8958	C8958
12	GASKET *	A2-3020	A2-3020	A2-3020	A2-3020	A2-3020	A2-3020

NOTES: 1. NON-STANDARD pump parts are not shown. When ordering repair parts, refer to page 10 of this catalog.
2. * = These parts are required when replacing shaft seal.

550

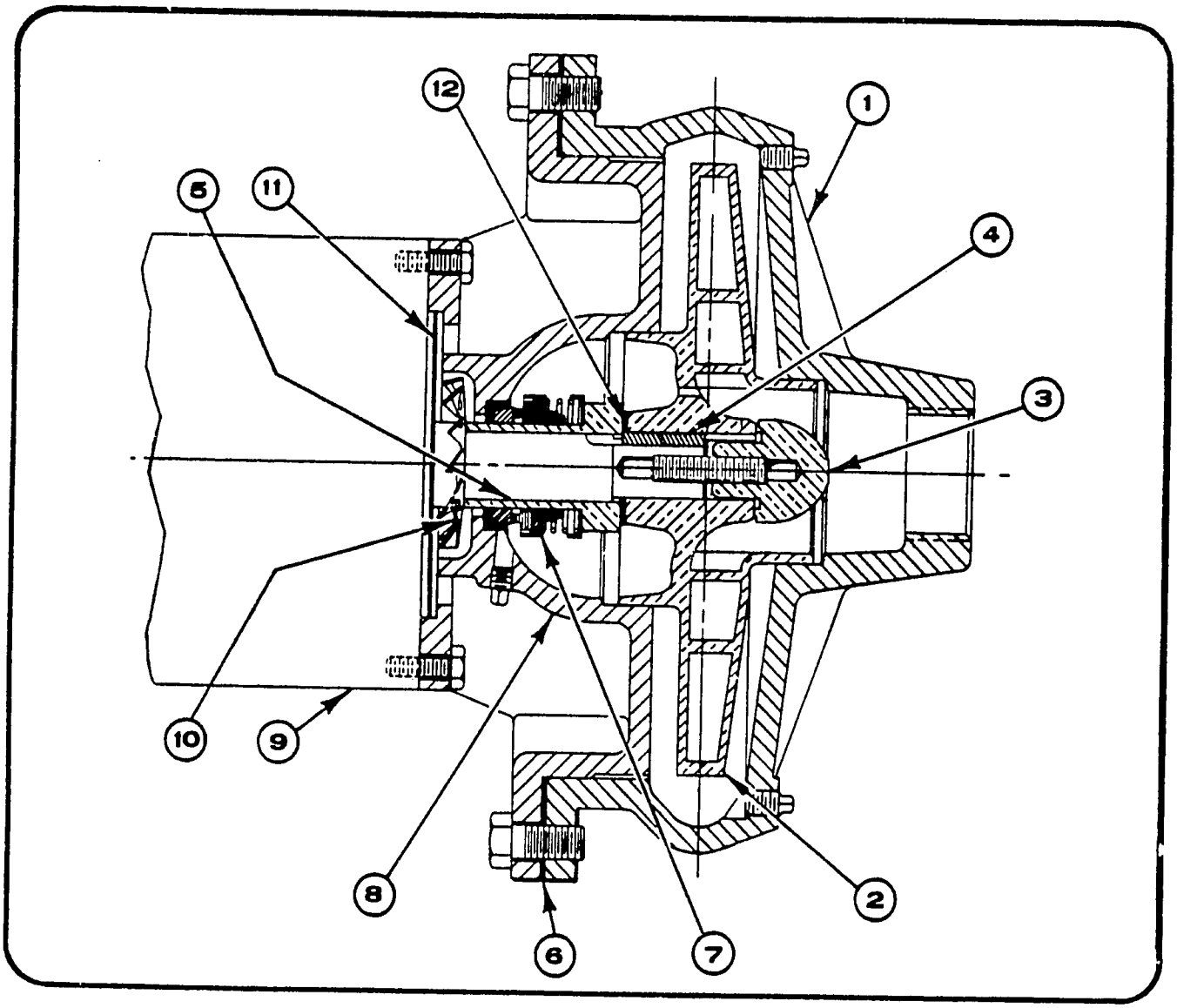

A9 PUMP AND PARTS LIST
SERIES A – 1½ HP

PART NUMBER AND DESCRIPTION	1½ HP 1" 1ϕ & 3ϕ A9C1A	1½ HP 1¼" 1ϕ & 3ϕ A9D1A	1½ HP 2" 1ϕ & 3ϕ A9D1A	1½ HP 2½" 1ϕ & 3ϕ A9D1A
1 CASE (CAST IRON) CASE (BRONZE)	D541 D2-76	F540 D2-74	F544 D2-80	F545 D2-79
2 IMPELLER (BRONZE)	C2-3211X $8^{7}/_{16}$"	C2-3213X $6^{3}/_{8}$"	C2-3214X $5^{29}/_{32}$"	C2-3215X $5^{21}/_{33}$"
3 STUD & NUT ASSEMBLY	C10035 A2-3898	C10035 A2-3898	C10035 A2-3898	C10035 A2-3898
4 KEY	C7763	C7763	C7763	C7763
5 SLEEVE *	A2-3905	A2-3905	A2-3905	A2-3905
6 GASKET *	D5450	D5450	D5450	D5450
7 SHAFT SEAL *	3179	3179	3179	3179
8 HEAD (CAST IRON) HEAD (BRONZE)	D2-1478 D2-1480	D2-1478 D2-1480	D2-1478 D2-1479	D2-1478 D2-1480
9 MOTOR	Contact Dunham-Bush, Inc., Marshalltown, Iowa			
10 SLINGER	C10038	C10038	C10038	C10038
11 SHIELD	C8958	C8958	C8958	C8958
12 GASKET *	A2-3020	A2-3020	A2-3020	A2-3020

NOTES: 1. NON-STANDARD pump parts are not shown. When ordering repair parts, refer to page 10 of this catalog.
2. * = These parts are required when replacing shaft seal.

557

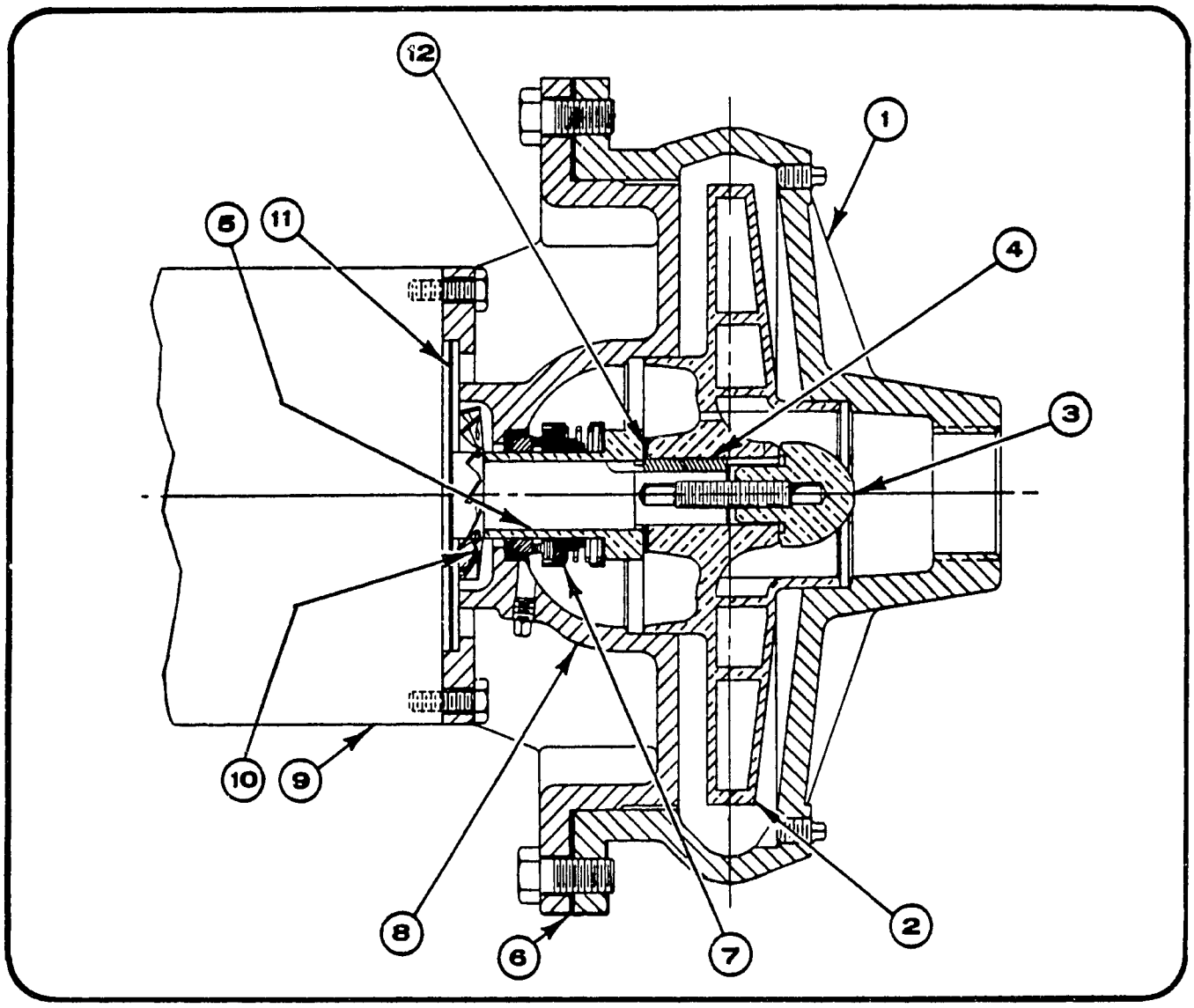

A9 PUMP AND PARTS LIST
SERIES A - 2 HP

	PART NUMBER AND DESCRIPTION	2 HP 1" 1ϕ A9C1A	2 HP 1" 3ϕ A9C1A	2 HP 1¼" 1ϕ A9D1A	2 HP 1¼" 3ϕ A9D1A	2 HP 2" 1ϕ D9D1A	2 HP 2" 3ϕ A9D1A	2 HP 2½" 1ϕ A9D1A	2 HP 2½" 3ϕ A9D1A
1	CASE (CAST IRON) CASE (BRONZE)	F541 D2-76	F541 D2-76	F540 D2-74	F540 D2-74	F544 D2-80	F544 D2-80	F545 D2-79	F545 D2-79
2	IMPELLER (BRONZE)	C2-3211X 9"	C2-3211X 9"	C2-3213X 7 3/16"	C2-3213X 7 3/16"	C2-3214X 6 1/2"	C2-3214X 6 1/2"	C2-3215X 6 1/8"	C2-3215X 6 1/8"
3	STUD & NUT ASSEMBLY	C10035 A2-3898	C10035 A2-3898	C10035 A2-3898	C10035 A2-3898	C10035 A2-3898	C10035 A2-3898	C10035 A2-3898	C10035 A2-3898
4	KEY	C7763	C7763	C7763	C7763	C7763	C7763	C7763	C7763
5	SLEEVE *	A2-3905	A2-3905	A2-3905	A2-3905	A2-3905	A2-3905	A2-3905	A2-3905
6	GASKET *	D5450	D5450	D5450	D5450	D5450	D5450	D5450	D5450
7	SHAFT SEAL *	3179	3179	3179	3179	3179	3179	3179	3179
8	HEAD (CAST IRON) HEAD (BRONZE)	D2-1478 D2-1480	D2-1478 D2-1480	D2-1478 D2-1480	D2-1478 D2-1480	D2-1478 D2-1480	D2-1478 D2-1480	D2-1478 D2-1480	D2-1478 D2-1480
9	MOTOR	Contact Dunham-Bush, Inc., Marshalltown, Iowa							
10	SLINGER	C10038	C10038	C10038	C10038	C10038	C10038	C10038	C10038
11	SHIELD	C8958	C8958	C8958	C8958	C8958	C8958	C8958	C8958
12	GASKET *	A2-3020	A2-3020	A2-3020	A2-3020	A2-3020	A2-3020	A2-3020	A2-3020

NOTES: 1. NON-STANDARD pump parts are not shown. When ordering repair parts, refer to page 10 of this catalog.
2. * = These parts are required when replacing shaft seal.

552

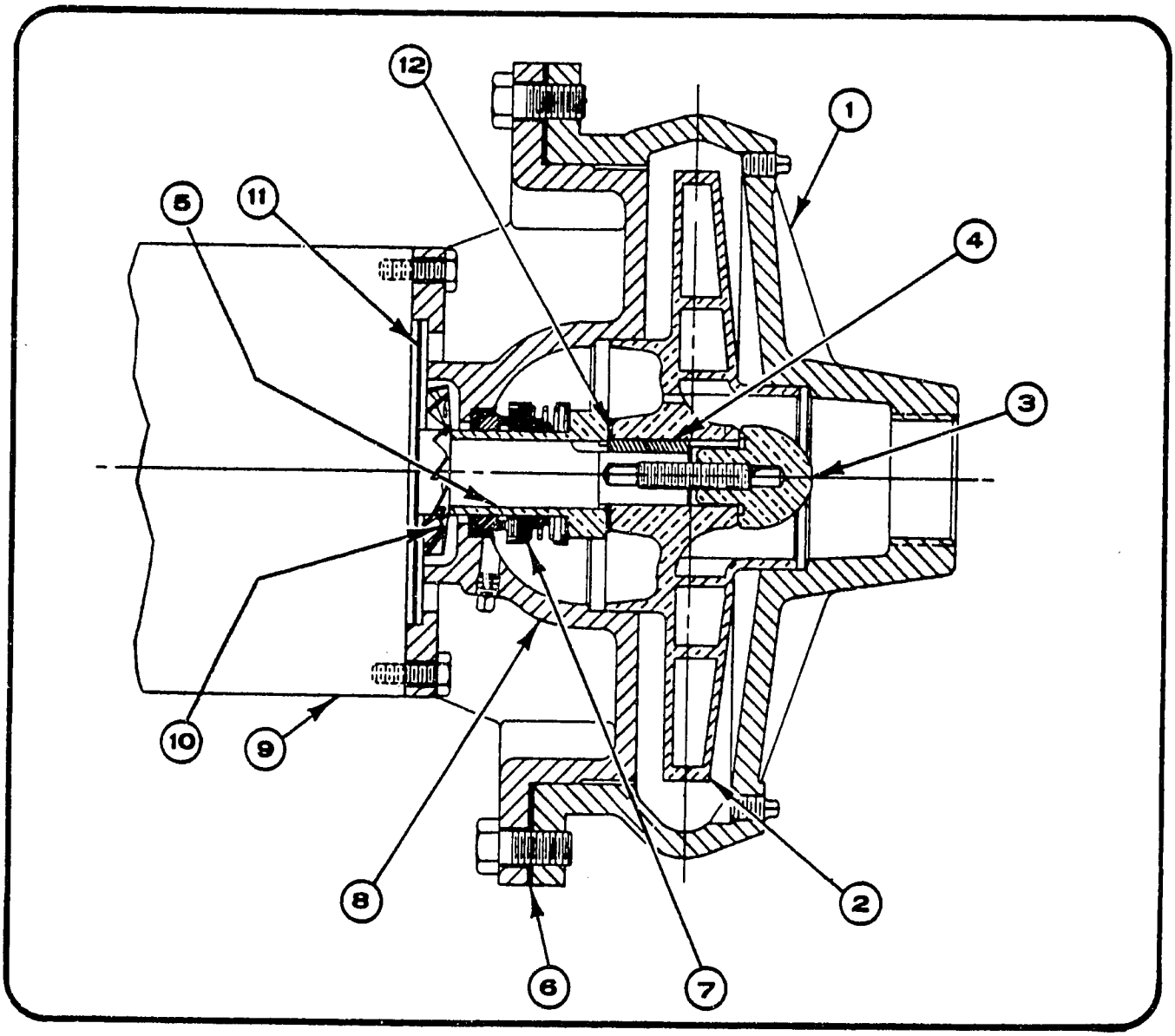

A9 PUMP AND PARTS LIST SERIES A - 3 HP

PART NUMBER AND DESCRIPTION	3 HP 1" 3ϕ A9D2A	3 HP 1" 3ϕ A9C2A	3 HP 1¼" 3ϕ A9D1A	3 HP 1¼" 3ϕ A9D2A	3 HP 2" 3ϕ A9D1A	3 HP 2½" 3ϕ A9D1A
1 CASE (CAST IRON) CASE (BRONZE)	F541 D2-76	F541 D2-76	F540 D2-74	F540 D2-74	F544 D2-80	F545 D2-79
2 IMPELLER (BRONZE)	C2-3212X 5¼"	C2-3211X 6 1/16"	C2-3213X 8¼"	C2-3213X 4 7/16"	C2-3214X 7 1/16"	C2-3215X 6¾"
3 STUD & NUT ASSEMBLY	C10035 A2-3898	C10035 A2-3898	C10035 A2-3898	C10035 A2-3898	C10035 A2-3898	C10035 A2-3898
4 KEY	C7763	C7763	C7763	C7763	C7763	C7763
5 SLEEVE *	A2-3905	A2-3905	A2-3905	A2-3905	A2-3905	A2-3905
6 GASKET *	D5450	D5450	D5450	D5450	D5450	D5450
7 SHAFT SEAL *	3179	3179	3179	3179	3179	3179
8 HEAD (CAST IRON) HEAD (BRONZE)	D2-1478 D2-1480	D2-1478 D2-1480	D2-1478 D2-1480	D2-1478 D2-1480	D2-1478 D2-1480	D2-1478 D2-1480
9 MOTOR	Contact Dunham-Bush, Inc., Marshalltown, Iowa					
10 SLINGER	C10038	C10038	C10038	C10038	C10038	C10038
11 SHIELD	C8958	C8958	C8958	C8958	C8958	C8958
12 GASKET *	A2-3020	A2-3020	A2-3020	A2-3020	A2-3020	A2-3020

NOTES: 1. NON-STANDARD pump parts are not shown. When ordering repair parts, refer to page 10 of this catalog.
2. * = These parts are required when replacing shaft seal.

553

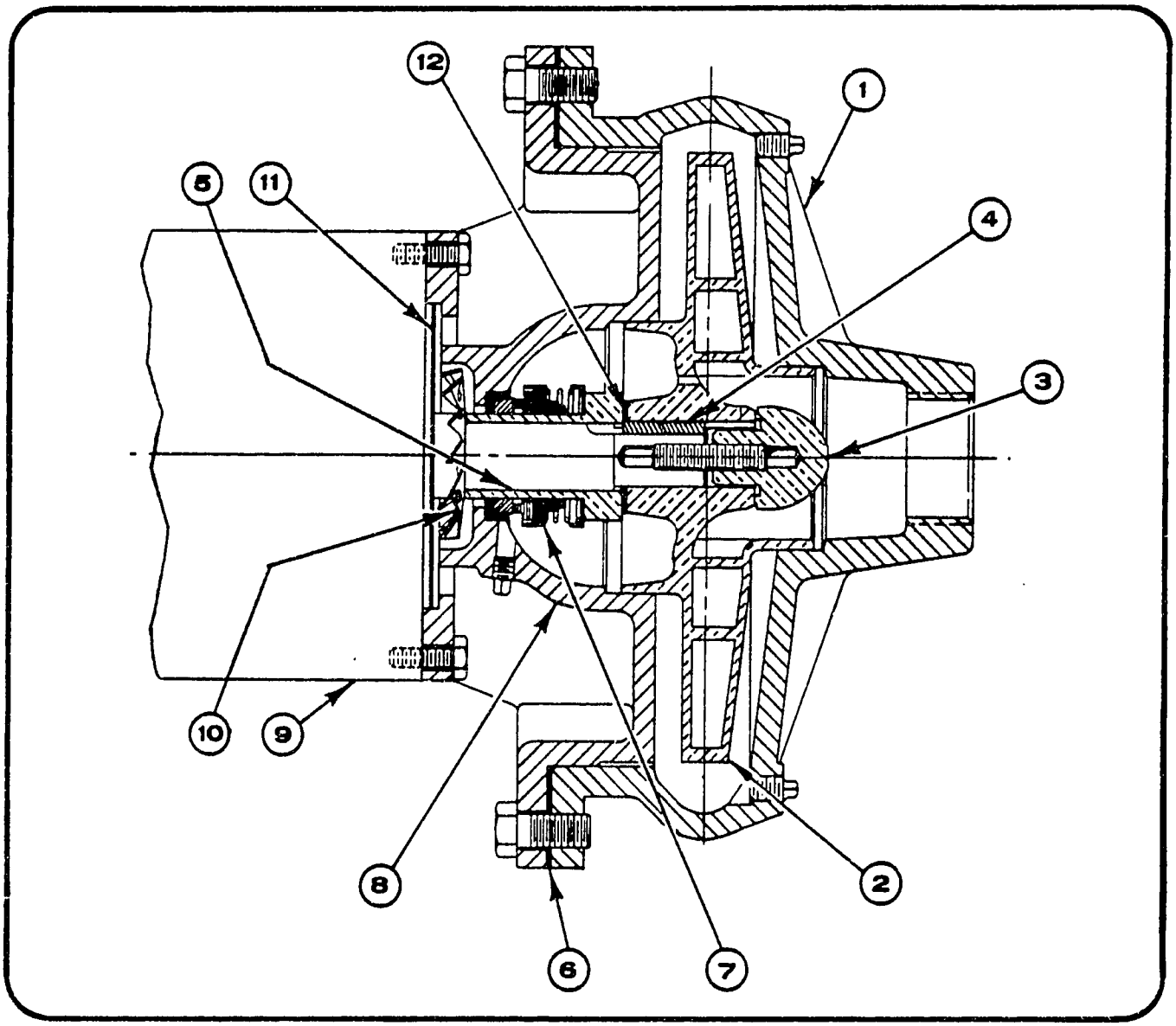

A9 PUMP AND PARTS LIST SERIES A – 5 HP

PART NUMBER AND DESCRIPTION	5 HP 1" 3ϕ A9C2A	5 HP 1" 3ϕ A9D2A	5 HP 1¼" 3ϕ A9D2A	5 HP 2" 3ϕ A9D1A	5 HP 2" 3ϕ A9D2A	5 HP 2½" 3ϕ A9D1A	5 HP 2½" 3ϕ A9D2A
1 CASE (CAST IRON) CASE (BRONZE)	F541 D2-76	F541 D2-76	F540 D2-74	F544 D2-80	F544 D2-80	F545 D2-79	F545 D2-79
2 IMPELLER (BRONZE)	C2-3211X $6^{9}/_{16}$"	C2-3212X $5^{7}/_{8}$"	C2-3213X $5^{15}/_{32}$"	C2-3214X $8^{7}/_{16}$"	C2-3214X $4^{15}/_{16}$"	C2-3215X $7^{15}/_{16}$"	C2-3215X $4^{3}/_{4}$"
3 STUD & NUT ASSEMBLY	C10035 A2-3898	C10035 A2-3898	C10035 A2-3898	C10035 A2-3899	C10035 A2-3899	C10035 A2-3899	C10035 A2-3899
4 KEY	C7763	C7763	C7763	C7763	C7763	C7763	C7763
5 SLEEVE *	A2-3905	A2-3905	A2-3905	A2-3905	A2-3905	A2-3905	A2-3905
6 GASKET *	D5450	D5450	D5450	D5450	D5450	D5450	D5450
7 SHAFT SEAL*	3179	3179	3179	3179	3179	3179	3179
8 HEAD (CAST IRON) HEAD (BRONZE)	D2-1478 D2-1480	D2-1478 D2-1480	D2-1478 D2-1480	D2-1478 D2-1480	D2-1478 D2-1480	D2-1478 D2-1480	D2-1478 D2-1480
9 MOTOR	Contact Dunham-Bush, Inc., Marshalltown, Iowa						
10 SLINGER	C10038	C10038	C10038	C10038	C10038	C10038	C10038
11 SHIELD	C8958	C8958	C8958	C8958	C8958	C8958	C8958
12 GASKET *	A2-3020	A2-3020	A2-3020	A2-3020	A2-3020	A2-3020	A2-3020

NOTES: 1. NON-STANDARD pump parts are not shown. When ordering repair parts, refer to page 10 of this catalog.
2. * = These parts are required when replacing shaft seal.

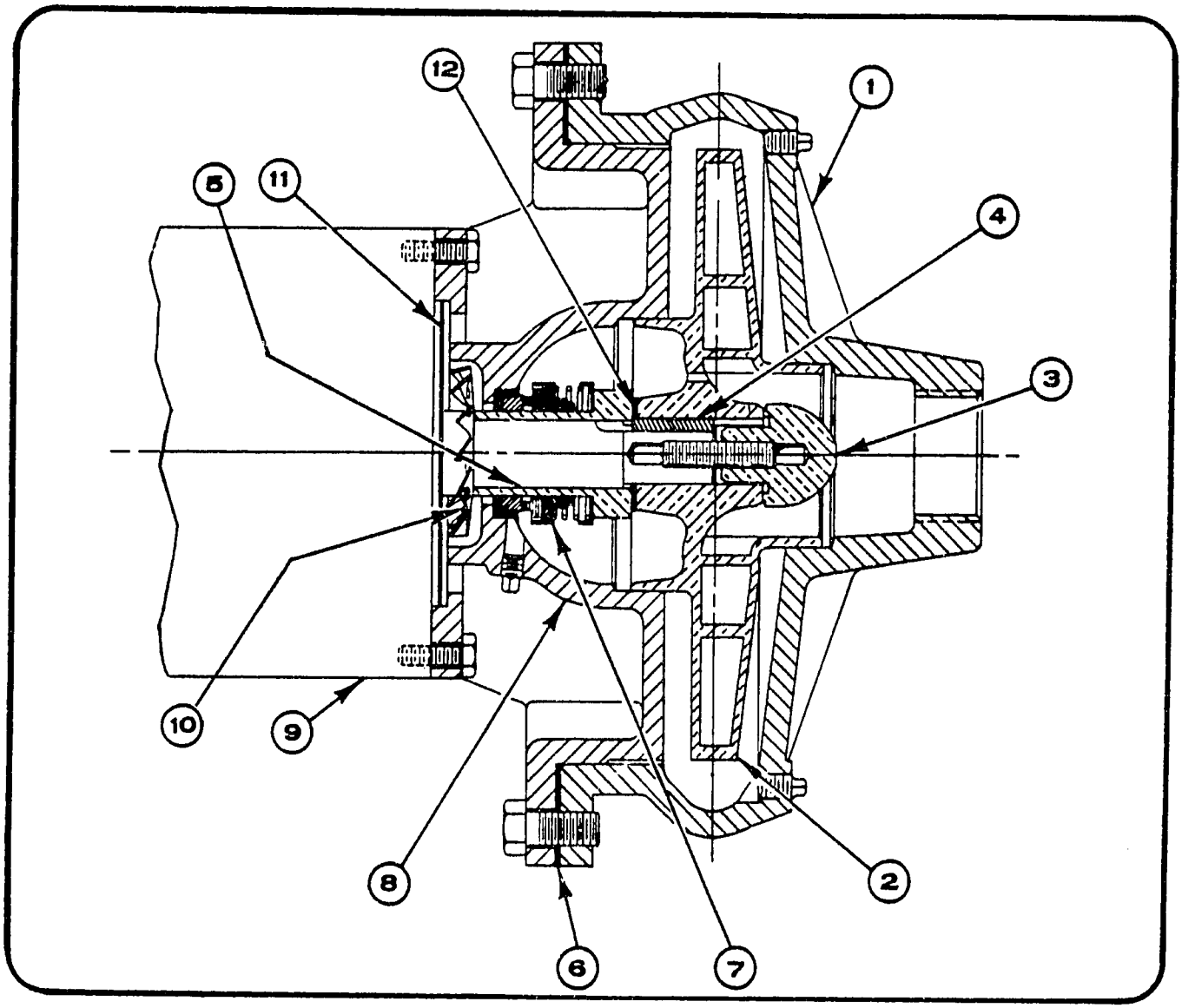

A9 PUMP AND PARTS LIST
SERIES A - 7½ HP

PART NUMBER AND DESCRIPTION	7½ HP 1¼" 3ϕ A9D2A	7½ HP 2" 3ϕ A9D2A	7½ HP 2½" 3ϕ A9D1A	7½ HP 2½" 3ϕ A9D1A
1 CASE (CAST IRON) CASE (BRONZE)	F540 D2-74	F544 D2-80	F545 D2-79	F545 D2-79
2 IMPELLER (BRONZE)	C2-3213X 5 15/16"	C2-3214X 5 9/16"	C2-3215X 9"	C2-3215X 5 5/16"
3 STUD & NUT ASSEMBLY	C10035 A2-3899	C10035 A2-3899	C10035 A2-3899	C10035 A2-3899
4 KEY	C7763	C7763	C7763	C7763
5 SLEEVE *	A2-3905	A2-3905	A2-3905	A2-3905
6 GASKET *	D5450	D5450	D5450	D5450
7 SHAFT SEAL*	3179	3179	3179	3179
8 HEAD (CAST IRON) HEAD (BRONZE)	D2-1478 D2-1480	D2-1478 D2-1480	D2-1481 D2-1483	D2-1478 D2-1480
9 MOTOR	Contact Dunham-Bush, Inc., Marshalltown, Iowa			
10 SLINGER	C1038	C1038	C1038	C1038
11 SHIELD	C8958	C8958	D5478	C8958
12 GASKET *	A2-3020	A2-3020	A2-3020	A2-3020

NOTES: 1. NON-STANDARD pump parts are not shown. When ordering repair parts, refer to page 10 of this catalog.
2. * = These parts are required when replacing shaft seal.

555

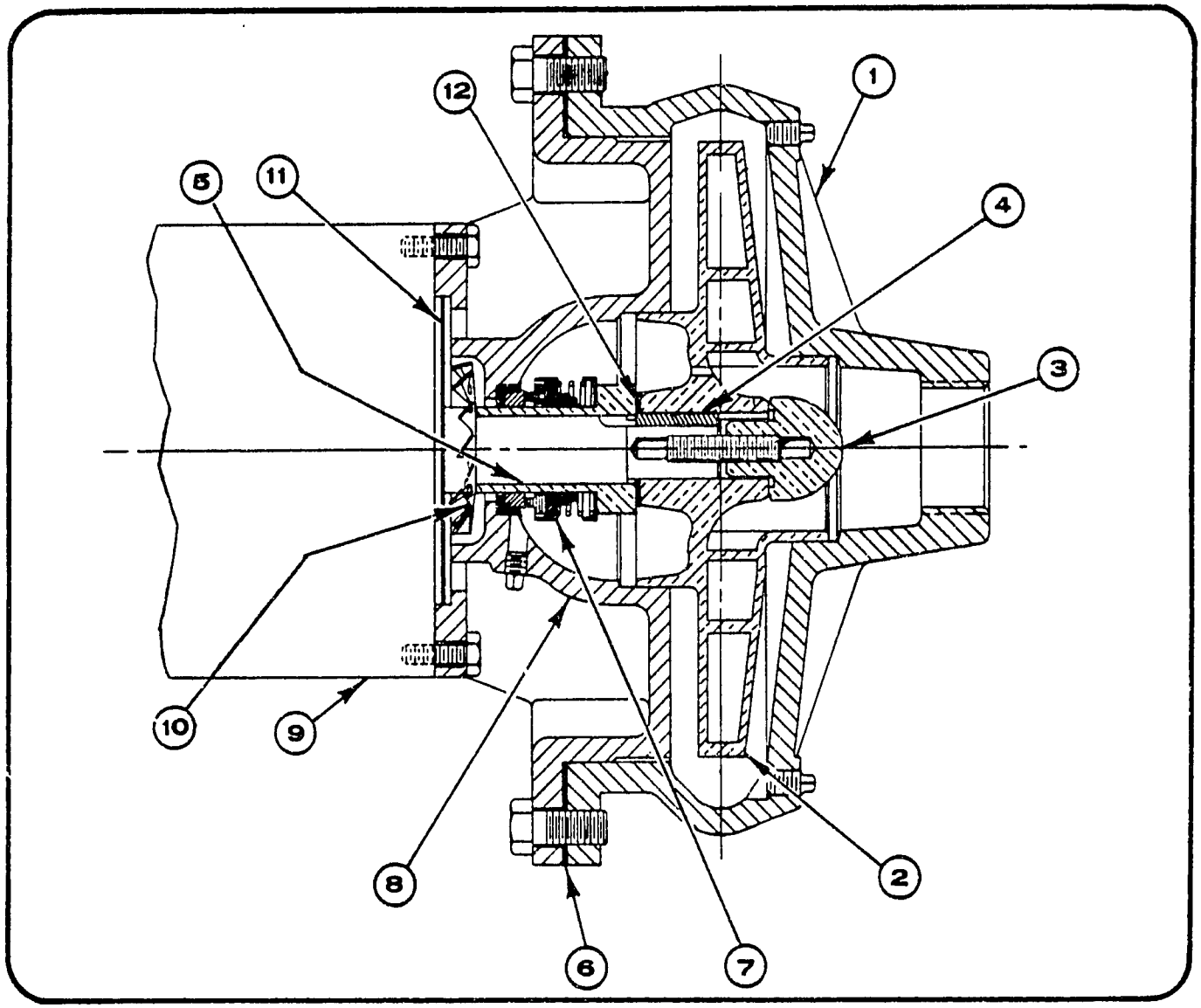

A9 PUMP AND PARTS LIST
SERIES A – 10 HP AND 15 HP

PART NUMBER AND DESCRIPTION	10 HP 1¼" 3ϕ A9D2A	10 HP 2" 3ϕ A9D2A	10 HP 2½" 3ϕ A9D2A	15 HP 2" 3ϕ A9D2A
1 CASE (CAST IRON) CASE (BRONZE)	F540 D2-74	F544 D2-80	F545 D2-79	F544 D2-80
2 IMPELLER (BRONZE)	C2-3213X $6^{3}/_{8}$"	C2-3214X $5^{29}/_{32}$"	C2-3215X $5^{21}/_{32}$"	C2-3214X $6^{5}/_{16}$"
3 STUD & NUT ASSEMBLY	C10035 A2-3899	C10035 A2-3899	C10035 A2-3899	C10035 A2-3899
4 KEY	C7763	C7763	C7763	C7763
5 SLEEVE *	A2-3905	A2-3905	A2-3905	A2-3905
6 GASKET *	D5450	D5450	D5450	D5450
7 SHAFT SEAL *	3179	3179	3179	3179
8 HEAD (CAST IRON) HEAD (BRONZE)	D2-1481 D2-1483	D2-1481 D2-1483	D2-1481 D2-1483	D2-1481 D2-1483
9 MOTOR	Contact Dunham-Bush, Inc., Marshalltown, Iowa			
10 SLINGER	C1038	C1038	C1038	C1038
11 SHIELD	D5478	D5478	D5478	D5478
12 GASKET *	A2-3020	A2-3020	A2-3020	A2-3020

NOTES: 1. NON-STANDARD pump parts are not shown. When ordering repair parts, refer to page 10 of this catalog.
2. * = These parts are required when replacing shaft seal.

556

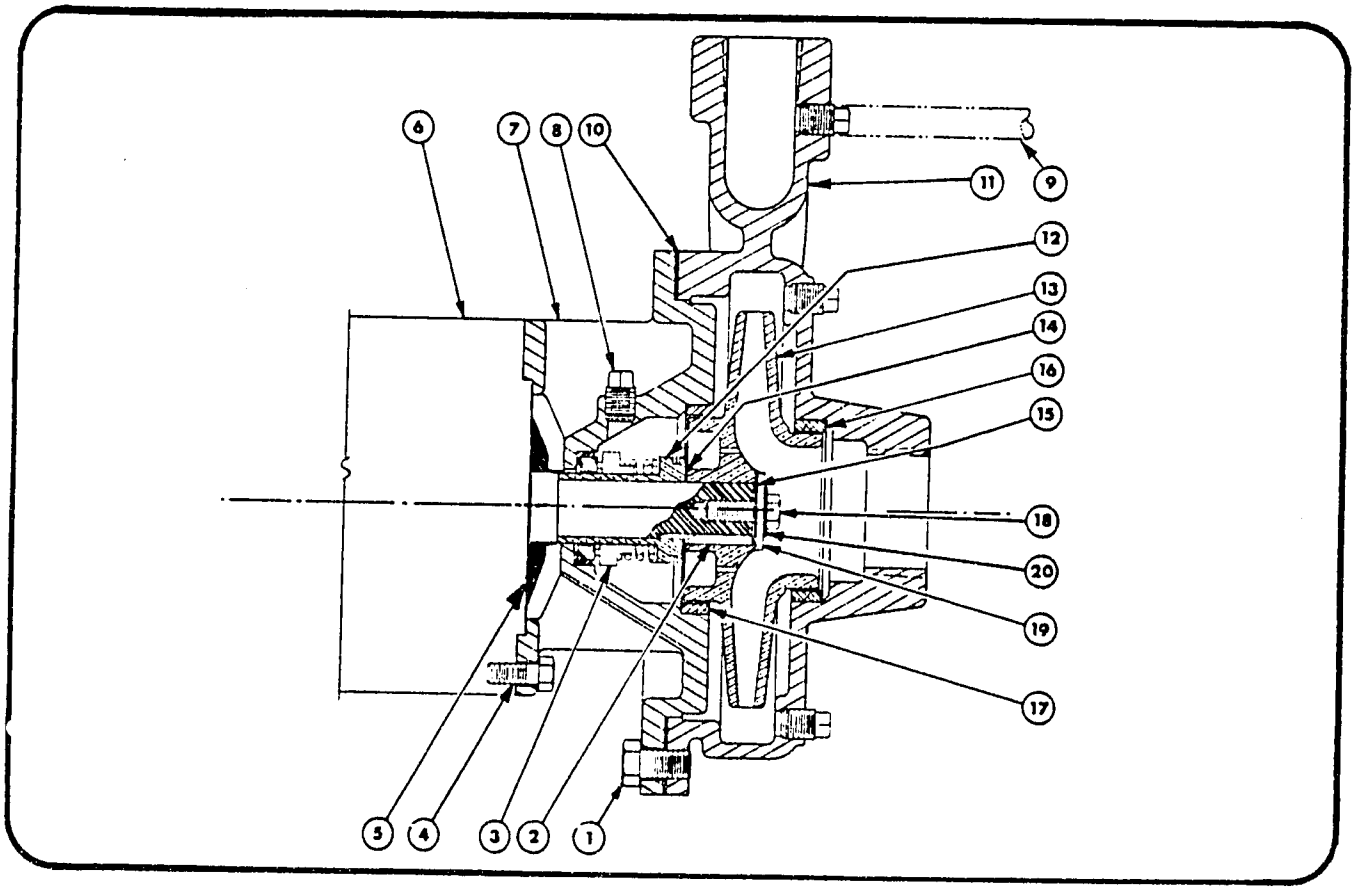

A7 PUMP AND PARTS LIST – ¾", 1¼" AND 1½" DIA. DISCHARGE

PART NUMBER & DESCRIPTION		¾" A7B	1¼" A7B	1¼" A7C	1½" A7B	1½" A7C
1.	Screw – Cap	P - 150				
2.	Key – Impeller	Supplied with Motor				
3.	Seal – Mechanical *	3179	3179	3179	3179	3179
	Seal – 250# Optional	Contact Dunham-Bush, Inc., Marshalltown, Iowa				
4.	Screw – Cap	P-142	P-142	P-150	P-142	P-150
5.	Slinger	Supplied with Motor				
6.	Motor	Contact Dunham-Bush, Inc., Marshalltown, Iowa				
7.	Head, C.I.	C2-2336	C2-2336	C2-2337	C2-2336	C2-2337
	Head, Bronze	C2-2660	C2-2660	C2-2661	C2-2660	C2-2661
	Head, C.I. w/wear Rings	C2-2345	C2-2345	C2-2346	C2-2345	C2-2346
8.	Fitting – Compression Straight	P - 194 (Optional)				
	Fitting – Elbow, Not shown	P - 195 (Optional)				
	Plug – Pipe	(5) P - 196				
9.	Tube	Copper 1/8" OD (Optional)				
10.	Gasket – Case *	C2-2343				
11.	Case, C.I.	C2-2390	C2-2335		C2-2377	
	Case, (Bronze)	C2-2665	C2-2666		C2-2667	
	Case, C.I. w/wear Rings	C2-2389	C2-2347		C2-2376	
	Case, 250# C.I.	Not Available				
	Case, 250# Bronze	Not Available				
	Case, 250# C.I. w/wear Rings	Not Available				
12.	Sleeve *	A2-3018	A2-3018	A2-3018	A2-3018	A2-3018
	Seal – 250# Optional	Contact Dunham-Bush, Inc., Marshalltown, Iowa				
13.	Impeller	C2-2378	C2-2340	C2-2340	C2-2380	C2-2380
14.	Gasket (Impeller – Sleeve) *	A2-3020	A2-3020	A2-3020	A2-3020	A2-3020
15.	Gasket (Impeller – Head) *	A2-3022-1				
16.	Ring – Case Wear Ring	A2-3026	A2-3015		A2-3027	
17.	Ring – Head Wear Ring	A2-3016				
18.	Screw – Impeller	3312	3312	3312	3312	3312
19.	Washer – Impeller	A2-3021-1				
20.	Washer – Sealing	3313	3313	3313	3313	3313

NOTES: 1. NON-STANDARD pump parts are not shown. When ordering repair parts, refer to page 10 of this catalog.
2. * = These parts are required when replacing shaft seal.

557

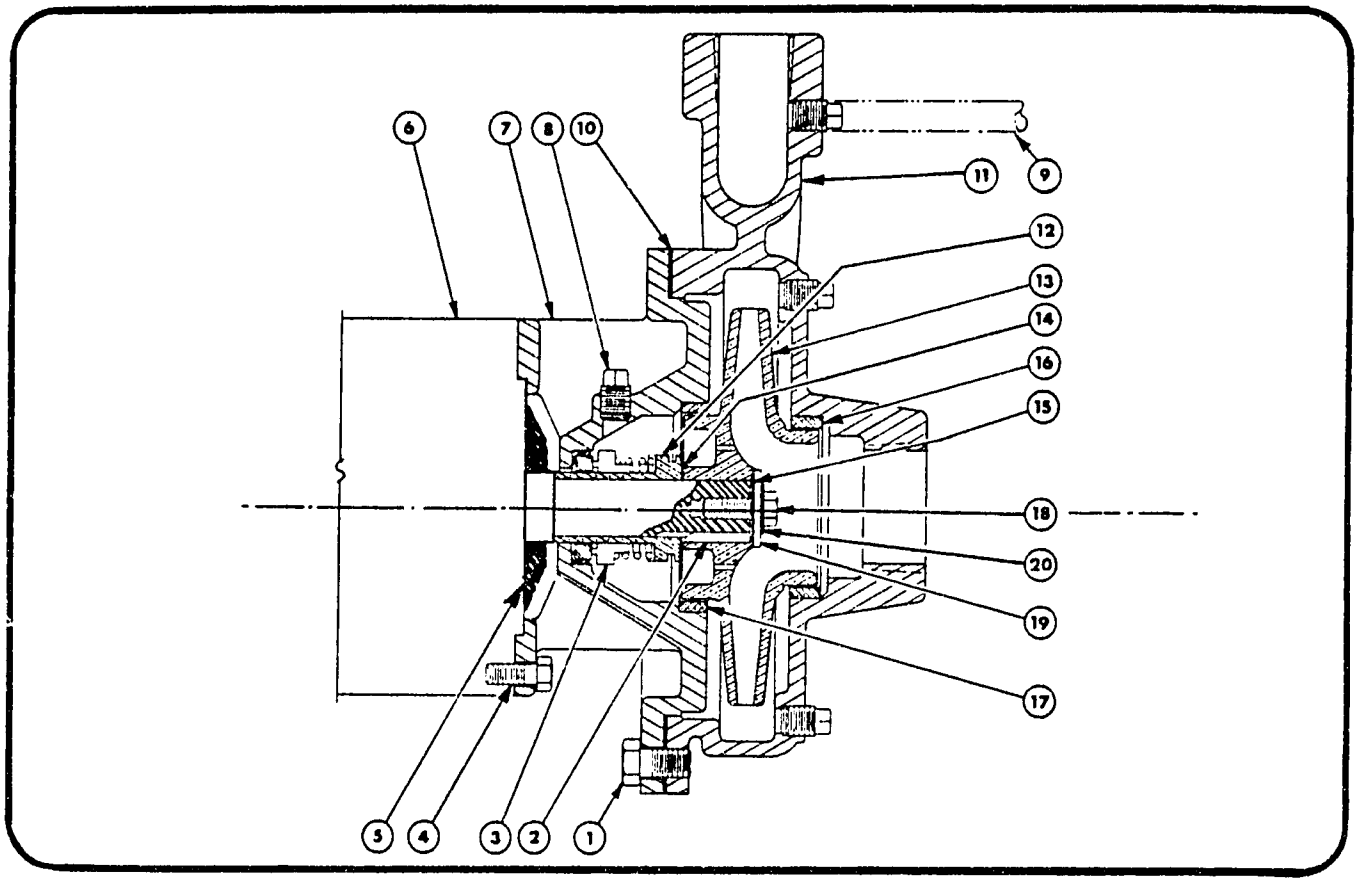

A7 PUMP AND PARTS LIST – 2" AND 2½" DIA. DISCHARGE

PART NUMBER & DESCRIPTION		2" A7D	2" A7E	2" A7F	2½" A7D	2½" A7E	2½" A7E H.C.	2½" A7F
1.	Screw – Cap	P - 150						
2.	Key – Impeller	Supplied with Motor						
3.	Seal – Mechanical *	3179	3179	3291	3179	3179	3179	3291
	Seal – 250# Optional	Contact Dunham-Bush, Inc., Marshalltown, Iowa						
4.	Screw – Cap	P - 142	P - 150	P - 150	P - 142	P - 150	P - 150	P - 150
5.	Slinger	Supplied with Motor						
6.	Motor	Contact Dunham-Bush, Inc., Marshalltown, Iowa						
7.	Head, C.I.	C2-2384	C2-2386	C2-2388	C2-2384	C2-2386	C2-2386	C2-2388
	Head, Bronze	C2-2662	C2-2663	C2-2664	C2-2662	C2-2663	C2-2663	C2-2664
	Head, C.I. w/wear rings	C2-2383	C2-2385	C2-2387	C2-2383	C2-2385	C2-2385	C2-2387
8.	Fitting – Compression Straight	P - 194 (Optional)						
	Fitting – Elbow, Not shown	P - 195 (Optional)						
	Plug – Pipe	(5) P - 196						
9.	Tube	Copper 1/8" OD (Optional)						
10.	Gasket – Case *	C2-2343						
11.	Case, C.I.	D2-1274			D2-1276			
	Case, (Bronze)	D2-1352			D2-1355			
	Case, C.I. w/wear rings	D2-1273			D2-1275			
	Case, 250# C.I.	Not Available						
	Case, 250# Bronze	Not Available						
	Case, 250# C.I. w/wear rings	Not Available						
12.	Sleeve *	A2-3018	A2-3018	A2-3025	A2-3018	A2-3018	A2-3018	A2-3025
	Seal – 250# Optional	Contact Dunham-Bush, Inc., Marshalltown, Iowa						
13.	Impeller	C2-2381	C2-2381	C2-2382	C2-2381	C2-2381	C2-2392	C2-2382
14.	Gasket (Impeller – Sleeve) *	A2-3020	A2-3020	A2-3029	A2-3020	A2-3020	A2-3020	A2-3029
15.	Gasket (Impeller – Head) *	A2-3021-1		A2-3022-2	A2-3022-1			A2-3022-2
16.	Ring – Case Wear Ring	A2-3028						
17.	Ring – Head Wear Ring	A2-3016						
18.	Screw – Impeller	3312	3312	3292	3312	3312	3312	3292
19.	Washer – Impeller	A2-3021-1		A2-3021-2	A2-3021-1			A2-3021-2
20.	Washer – Sealing	3313	3313	3293	3313	3313	3313	3293

NOTES: 1. NON-STANDARD pump parts are not shown. When ordering repair parts, refer to page 10 of this catalog.
2. * = These parts are required when replacing shaft seal.

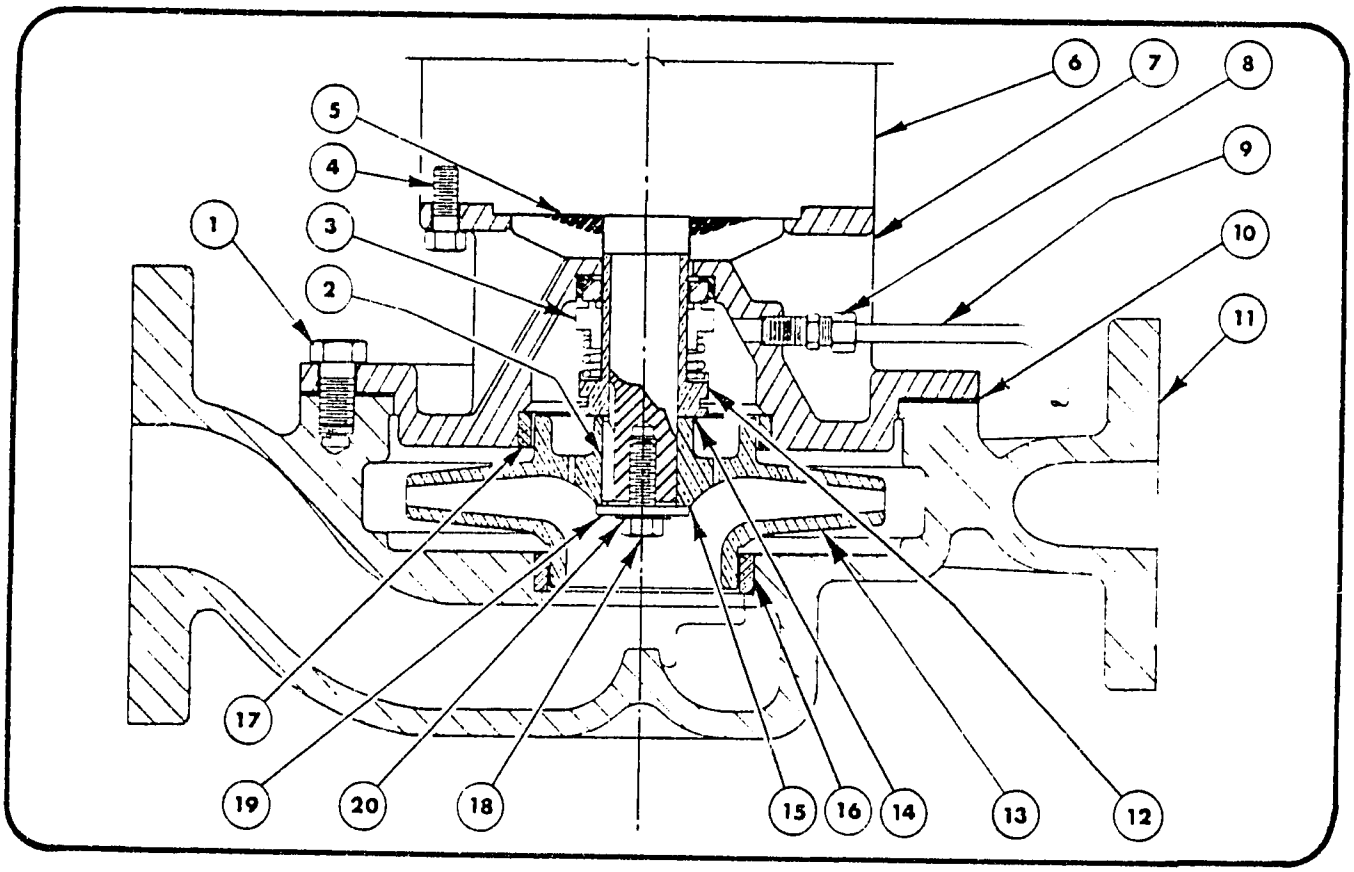

PM7 PUMP AND PARTS LIST – 1", 1¼" AND 1½" DIA. DISCHARGE

PART NUMBER & DESCRIPTION		1" PM7B	1¼" PM7B	1¼" PM7C	1½" PM7B	1½" PM7C
1.	Screw - Cap	P - 150				
2.	Key - Impeller	Supplied with Motor				
3.	Seal - Mechanical *	3179	3179	3179	3179	3179
	Seal 250= Optional	Contact Dunham-Bush, Inc. – Marshalltown, Iowa				
4.	Screw - Cap	P - 142	P - 142	P - 150	P - 142	P - 150
5.	Slinger	Supplied with Motor				
6.	Motor	Contact Dunham-Bush, Inc. – Marshalltown, Iowa				
7.	Head, C.I.	C2-2336	C2-2336	C2-2337	C2-2336	C2-2337
	Head, (Bronze)	C2-2660	C2-2660	C2-2661	C2-2660	C2-2661
	Head, C.I. w/wear rings	C2-2345	C2-2345	C2-2346	C2-2345	C2-2346
8.	Fitting - Compression Straight	P-194				
	Fitting - Elbow – Not shown	P-195				
	Plug - Pipe	(1) P-196				
9.	Tube	Copper 1/8" OD				
10.	Gasket - Case *	C2-2343				
11.	Case, C.I.	D2-1268	D2-1256	D2-1256	D2-1266	D2-1266
	Case, (Bronze)	D2-1346	D2-1348	D2-1348	D2-1350	D2-1350
	Case, C.I. w/wear rings	D2-1267	D2-1255	D2-1255	D2-1265	D2-1265
	Case, 250= C.I.	D2-1299	D2-1301	D2-1301	D2-1303	D2-1303
	Case, 250= Bronze	D2-1347	D2-1349	D2-1349	D2-1351	D2-1351
	Case, 250= C.I. w/wear rings	D2-1300	D2-1302	D2-1302	D2-1304	D2-1304
12.	Sleeve *	A2-3018	A2-3018	A2-3018	A2-3018	A2-3018
	Seal 250= Optional	Contact Dunham-Bush, Inc. – Marshalltown, Iowa				
13.	Impeller	C2-2379	C2-2340	C2-2340	C2-2380	C2-2380
14.	Gasket (Impeller - Sleeve) *	A2-3020	A2-3020	A2-3020	A2-3020	A2-3020
15.	Gasket (Impeller - Head) *	A2-3022-1				
16.	Ring - Case Wear Ring	A2-3026	A2-3015	A2-3015	A2-3027	A2-3027
17.	Ring - Head Wear Ring	A2-3016				
18.	Screw - Impeller	3312				
19.	Washer - Impeller	A2-3021-1				
20.	Washer - Sealing	3313				

NOTES: 1. NON-STANDARD pump parts are not shown. When ordering repair parts, refer to page 10 of this catalog.
2. * = Those parts are required when replacing shaft seal.

54

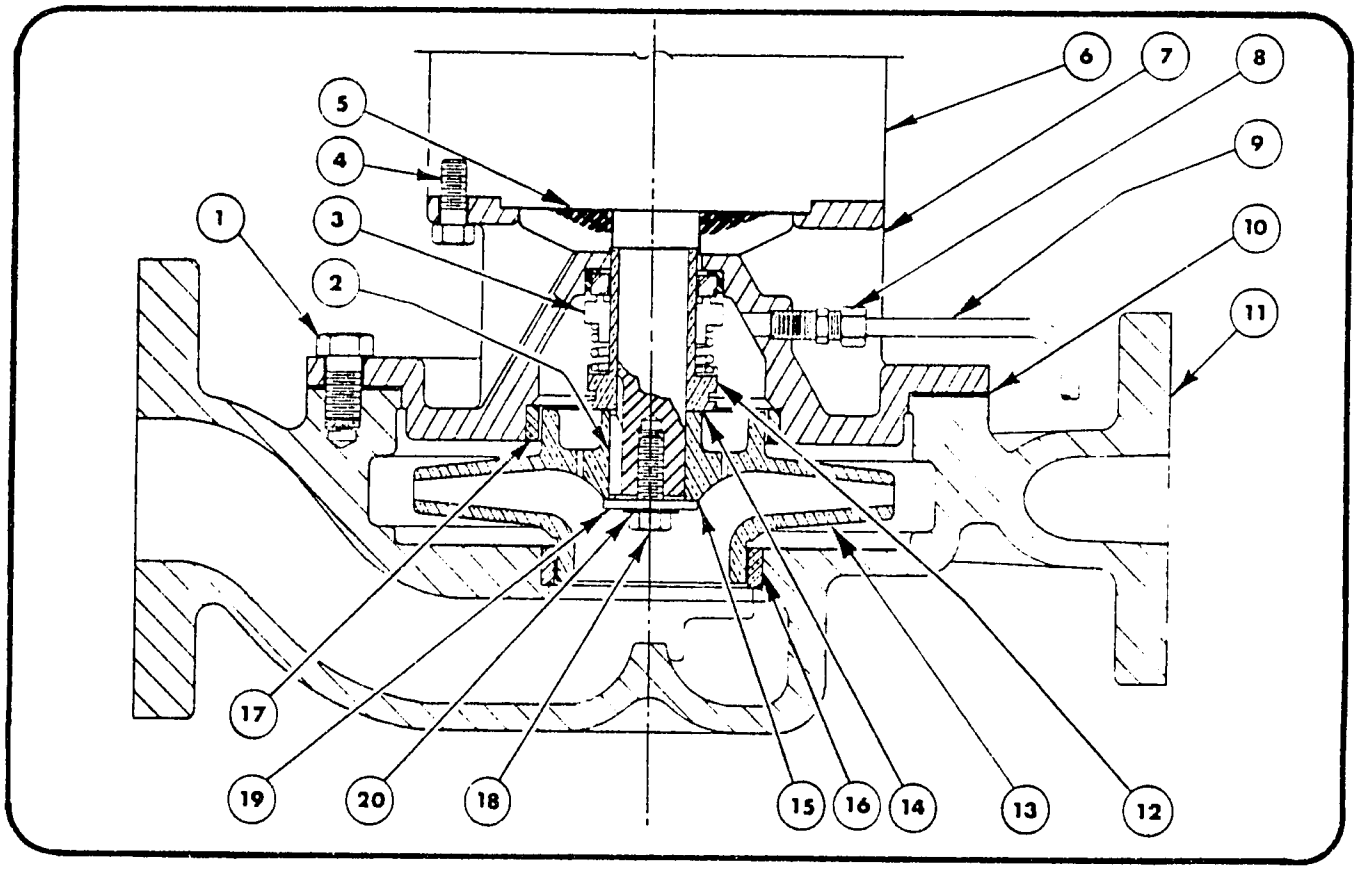

PM7 PUMP AND PARTS LIST – 2" AND 2½" DIA. DISCHARGE

PART NUMBER & DESCRIPTION		2" PM7D	2" PM7E	2" PM7F	2½" PM7D	2½" PM7E	2½" PM7E H.C.	2½" PM7F
1.	Screw - Cap	P - 150						
2.	Key - Impeller	Supplied with Motor						
3.	Seal - Mechanical *	3179	3179	3291	3179	3179	3179	3291
	Seal 250# Optional	Contact Dunham-Bush, Inc. – Marshalltown, Iowa						
4.	Screw - Cap	P - 142	P - 150	P - 150	P - 142	P -150	P - 150	P -150
5.	Slinger	Supplied with Motor						
6.	Motor	Contact Dunham-Bush, Inc. – Marshalltown, Iowa						
7.	Head, C.I.	C2-2384	C2-2386	C2-2388	C2-2384	C2-2386	C2-2386	C2-2388
	Head, (Bronze)	C2-2662	C2-2663	C2-2664	C2-2662	C2-2663	C2-2663	C2-2664
	Head, C.I. w/wear rings	C2-2383	C2-2385	C2-2387	C2-2383	C2-2385	C2-2385	C2-2387
8.	Fitting - Compression Straight	P-194						
	Fitting - Elbow – Not Shown	P-195						
	Plug - Pipe	(1) P-196						
9.	Tube	Copper 1/8" OD						
10.	Gasket - Case *	C2-2343						
11.	Case, C.I.	D2-1270			D2-1272			
	Case, (Bronze)	D2-1269			D2-1356			
	Case, C.I. w/wear rings	D2-1353			D2-1271			
	Case, 250# C.I.	D2-1305			D2-1307			
	Case, 250# Bronze	D2-1354			D2-1357			
	Case, 250# C.I. w/wear rings	D2-1306			D2-1308			
12.	Sleeve *	A2-3018	A2-3018	A2-3025	A2-3018	A2-3018	A2-3018	A2-3025
	Seal 250# Optional	Contact Dunham-Bush, Inc. – Marshalltown, Iowa						
13.	Impeller	C2-2381	C2-2381	C2-2382	C2-2381	C2-2381	C2-2392	C2-2382
14.	Gasket (Impeller - Sleeve) *	A2-3020	A2-3020	A2-3029	A2-3020	A2-3020	A2-3020	A2-3029
15.	Gasket (Impeller - Head)	A2-3022-1		A2-3022-2	A2-3022-1			A2-3022-2
16.	Ring - Case Wear Ring	A2-3028						
17.	Ring - Head Wear Ring	A2-3016						
18.	Screw - Impeller	3312		3292	3312			3292
19.	Washer - Impeller	A2-3021-1		A2-3021-2	A2-3021-1			A2-3021-2
20.	Washer - Sealing	3313		3293	3313			3293

NOTES: 1. NON-STANDARD pump parts are not shown. When ordering repair parts, refer to page 10 of this catalog.
2. * = These parts are required when replacing shaft seal.

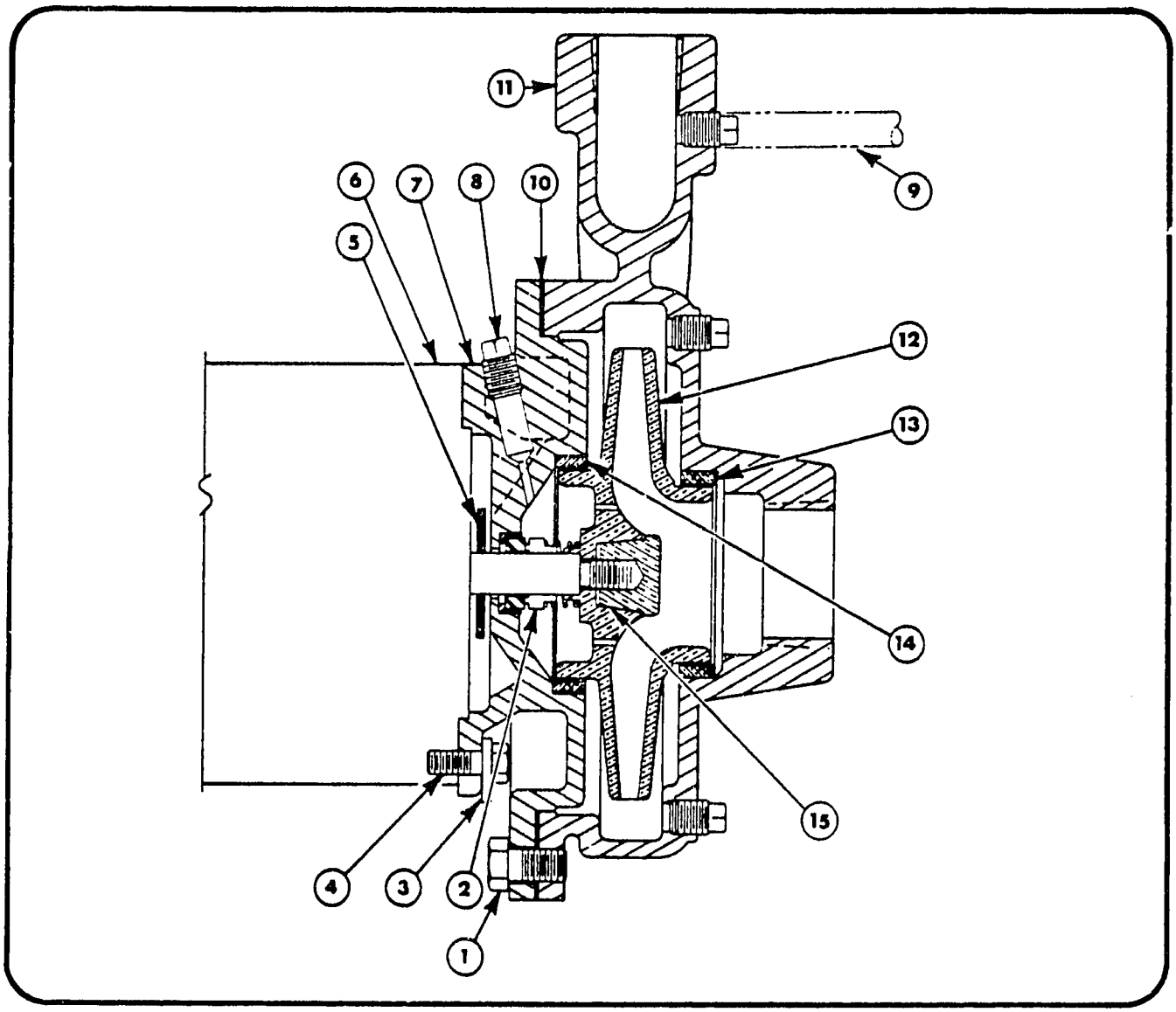

A7A PUMP AND PARTS LIST – ¾", 1¼" AND 1½" DIA. DISCHARGE

	PART NUMBER & DESCRIPTION	¾" A7A	1¼" A7A	1½" A7A
1.	Screw–Cap	P - 150	P - 150	P - 150
2.	Seal–Mechanical *	472	472	472
3.	Retainer–Head	A2-3023	A2-3023	A2-3023
4.	Screw–Cap	P - 142	P - 142	P - 142
5.	Slinger	C8854	C8854	C8854
6.	Motor	Contact Dunham-Bush, Inc. Marshalltown, Iowa		
7.	Head, C.I.	C2-2342	C2-2342	C2-2342
	Head, Bronze	C2-2659	C2-2659	C2-2659
	Head, C.I. w/wear rings	C2-2344	C2-2344	C2-2344
8.	Fitting – Compression Straight	P - 194 (Optional)		
	Fitting – Elbow (Not Shown)	P - 195 (Optional)		
	Plug–Pipe	(5) P - 196		
9.	Tube	Copper 1/8" OD (Optional)		
10.	Gasket–Case *	C2-2343	C2-2343	C2-2343
11.	Case, C.I.	C2-2390	C2-2335	C2-2377
	Case, Bronze	C2-2665	C2-2666	C2-2667
	Case, C.I. w/wear rings	C2-2389	C2-2347	C2-2376
12.	Impeller	C2-2378	C2-2339	C2-2498
13.	Ring – Case Wear Ring	A2-3026	A2-3015	A2-3027
14.	Ring – Head Wear Ring	A2-3016	A2-3016	A2-3016
15.	Screw–Impeller	A2-3691	A2-3691	A2-3691

NOTES: 1. NON-STANDARD pump parts are not shown. When ordering repair parts, refer to page 10 of this catalog.
2. * = These parts are required when replacing shaft seal.

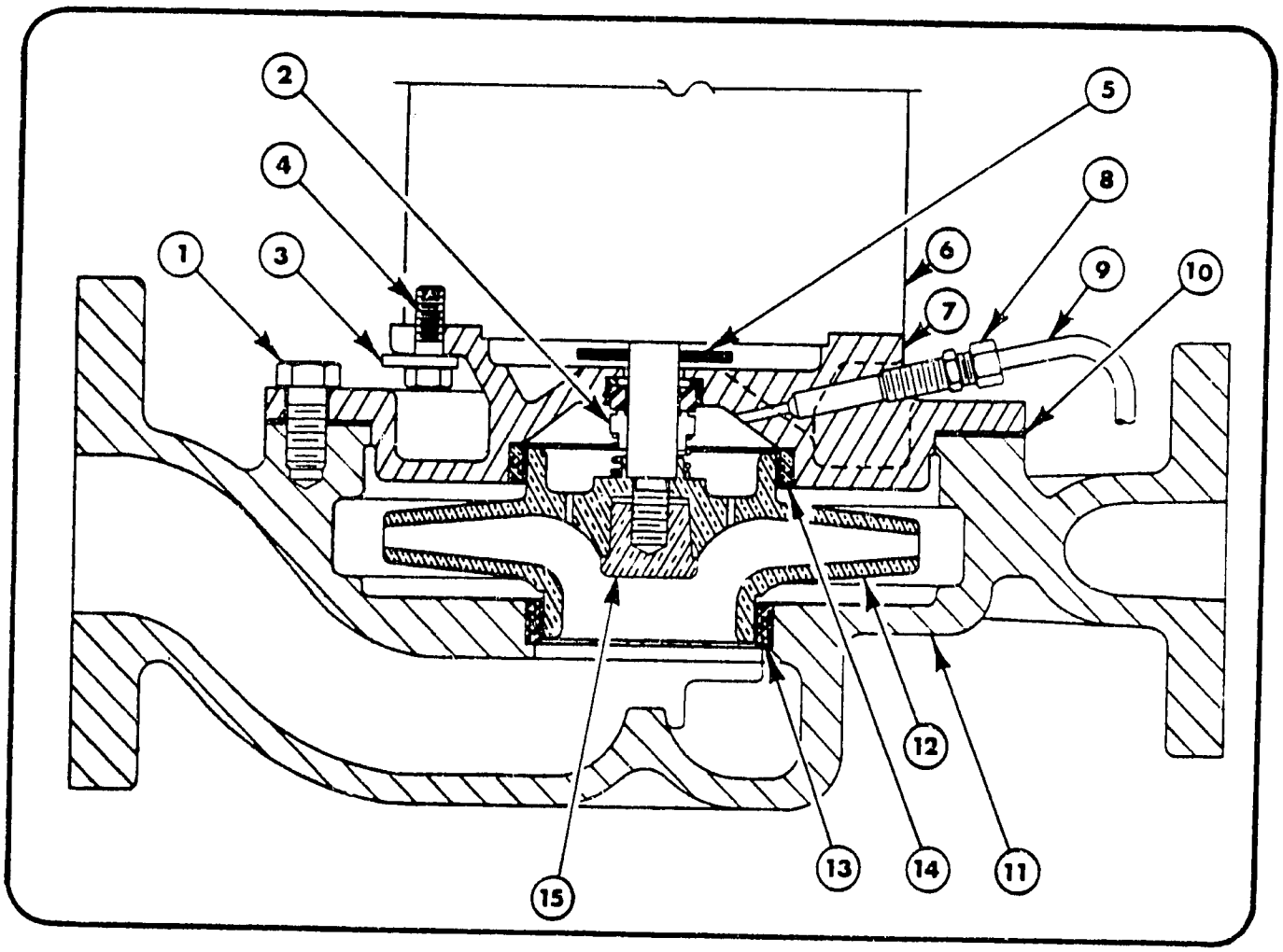

PM7A PUMP AND PARTS LIST
1", 1¼" AND 1½" DIA. DISCHARGE

PART NUMBER & DESCRIPTION		1" PM7A	1¼" PM7A	1½" PM7A
1.	Screw—Cap	P - 150	P - 150	P - 150
2.	Seal—Mechanical *	472	472	472
3.	Retainer—Head	A2-3023	A2-3023	A2-3023
4.	Screw—Cap	P - 142	P - 142	P - 142
5.	Slinger	C8854	C8854	C8854
6.	Motor	Contact Dunham-Bush, Inc., Marshalltown, Iowa		
7.	Head, C.I.	C2-2342	C2-2342	C2-2342
	Head, Bronze	C2-2659	C2-2659	C2-2659
	Head, C.I. w/wear rings	C2-2344	C2-2344	C2-2344
8.	Fitting—Compression Straight	P - 194		
	Fitting—Elbow (Not Shown)	P - 195		
	Plug—Pipe	(1) P - 196		
9.	Tube	Copper 1/8" OD		
10.	Gasket—Case *	C2-2343	C2-2343	C2-2343
11.	Case, C.I.	D2-1268	D2-1256	D2-1266
	Case, Bronze	D2-1346	D2-1348	D2-1350
	Case, C.I. w/wear rings	D2-1267	D2-1255	D2-1265
	Case, 250# C.I.	D2-1299	D2-1301	D2-1303
	Case, 250# Bronze	D2-1347	D2-1349	D2-1351
	Case, 250# C.I. w/wear rings	D2-1300	D2-1302	D2-1304
12.	Impeller	C2-2378	C2-2339	C2-2498
13.	Ring—Case Wear Ring	A2-3026	A2-3015	A2-3027
14.	Ring—Head Wear Ring	A2-3016	A2-3016	A2-3016
15.	Nut—Impeller	A2-3691	A2-3691	A2-3691

NOTES: 1. NON-STANDARD pump parts are not shown. When ordering repair parts, refer to page 10 of this catalog.
2. * = These parts are required when replacing shaft seal.

DUNHAM-BUSH

AIR CONDITIONING, REFRIGERATION, HEATING PRODUCTS AND ACCESSORIES

MAIN OFFICES

175 SOUTH STREET WEST HARTFORD, CONNECTICUT 06110

FACTORIES

WEST HARTFORD DIVISION
179 South Street
West Hartford, Connecticut
06110

HARRISONBURG DIVISION
101 Burgess Road
Harrisonburg, Virginia
22801

MARSHALLTOWN DIVISION
811 East Main Street
Marshalltown, Iowa
50158

RIVERSIDE DIVISION
1850 Massachusetts Ave.
Riverside, California
92507

SUBSIDIARIES

DUNHAM-BUSH of Canada Limited
140 Wendell Avenue
Weston, Ontario

DUNHAM-BUSH, LTD.
Fitzherbert Road, Farlington
Portsmouth, Hampshire, England

DUNHAM-BUSH INTERNATIONAL: 175 South Street, West Hartford, Connecticut 06110, U.S.A.
CABLE: DUNBUSH or TELEX: 994469

SALES OFFICES

ALABAMA
Birmingham
Mobile

ARIZONA
Phoenix

ARKANSAS
Little Rock

CALIFORNIA
Arcadia
Los Angeles
Sacramento
San Diego
San Francisco

COLORADO
Denver

CONNECTICUT
Hartford
Bloomfield

FLORIDA
Clearwater
Jacksonville
Miami
Orlando

GEORGIA
Atlanta

HAWAII
Honolulu

ILLINOIS
Chicago
Peoria
Rockford

INDIANA
Indianapolis
Michigan City

IOWA
Des Moines

KANSAS
Lenexa

KENTUCKY
Louisville

LOUISIANA
New Orleans
Shreveport

MAINE
Lewiston

MARYLAND
Baltimore
Silver Spring

MASSACHUSETTS
Boston
Springfield

MICHIGAN
Detroit
Grand Rapids
Kalamazoo

MINNESOTA
Minneapolis

MISSISSIPPI
Jackson

MISSOURI
Kansas City
St. Louis

MONTANA
Billings
Great Falls

NEBRASKA
Omaha

NEW JERSEY
Hazlet
Little Falls
Union

NEW MEXICO
Albuquerque

NEW YORK
Albany
Buffalo
New York City
Rochester
Syracuse

NORTH CAROLINA
Charlotte
Greensboro

OHIO
Akron
Cincinnati
Cleveland
Columbus
Dayton
Delaware
Toledo

OKLAHOMA
Oklahoma City
Tulsa

OREGON
Portland

PENNSYLVANIA
Harrisburg
Philadelphia
Pittsburgh
Pittston

PUERTO RICO
Caparra Heights

RHODE ISLAND
Providence

TENNESSEE
Memphis
Knoxville
Nashville

TEXAS
Dallas
El Paso
Houston
Lubbock
San Antonio

UTAH
Salt Lake City

VIRGINIA
Alexandria
Harrisonburg
Richmond
Virginia Beach

WASHINGTON
Seattle
Spokane

WEST VIRGINIA
Barboursville

WISCONSIN
Milwaukee

DUNHAM-BUSH, INC. • Marshalltown, Iowa 50158, U.S.A.

one of The Signal Companies

3440B-5M-477B-1079B

CONTRACT NO. AID/OTR-C-1629
PIO/T NO. 263-026-3-90315
WBEC PROJECT NO. 4631
PROCUREMENT AND TECHNICAL REVIEW
FOR USAID CAIRO, EGYPT

This report section pertains to the following project:

Importer:	Co-Operative Chicken Farmers
Order No:	EA 10063 (Partial)
L/C Bank:	Bank of America
L/C Amount:	$130,000.00
U.S. Bank L/C No:	621113
DIB L/C No.:	20095
SER/COM:	#4B

EQUIPMENT IDENTIFICATION

The equipment and spare parts lists from the suppliers final invoice and the equipment list from the contractor's on-site inspection are itemized in tabular form.

Consistency of the two parts lists may be easily established. This form also indicates compliance with the proforma invoice, contract and bank appraisal report.

Equipment details, such as catalog and serial numbers are shown on the contractor's on-site Equipment Identification form following the Equipment and Spare Parts Lists.

565

EQUIPMENT LIST

CONTRACTOR ON-SITE INSPECTION	DUNHAM-BUSH INVOICE # EA10063 Dated 5-25-79	DOCUMENT VERIFICATION		
		PROFORMA INVOICE	CONTRACT LOCAL	D.I.B. APPR. REPORT
		Dated 12-25-78	Dated 12-5-79	
(1) Pkg. Chiller w/screw compressor Model IPCX 500-05Q (2) Pumps Model A9 P/N 6-333002-02 (Motor) NOTE: Pumps were not installed in system. Importer indicated pumps arrived 2 months after start-up and pumps now in system were purchased locally.	(1) Pkg. Chiller Model PCX 500 (1) Starter for PCX 500 (?) Pumps Reference Proforma X-DB/78-29 Dated 12-25-78 NOTE: No brine pumps are listed on Proforma X-DB/78-29 dated 12-25-78	(1) Chiller Model ICPX 500	Contract for installation and start up only	(1) Pkg. Chiller Model IPCX 500

566

SPARE PARTS LIST

CONTRACTOR ON-SITE INSPECTION	DUNHAM-BUSH INVOICE #	COMMENTS
No spare parts listed	No spare parts listed	The importer has obtained a list of recommended parts from the Dunham-Bush Regional Office in Athens(Exhibit F-1). This is an extensive list and appears to include all replaceable parts for the PCX-500 pkg. chiller. The contractor would recommend the reduced spare parts list indicated in Exhibit F-2.

SER/COM #4B

DATE 2-2-81

IMPORTER: Coop-Chicken Farmers 23rd July

DIB L/C# 20095

LOCATION: Cairo

U.S. L/C 621113

SERVICE: Ice Plant

AMOUNT USD $130,000.00

EQUIPMENT IDENTIFICATION

TYPE Chiller	MODEL 1PCX500-05Q 380/3/50 R22 500#	SERIAL DPW 2510D79X2724	
Compressor	2510DLF1LOD	79C-014D	
Compressor Motor	B3502VLG3Y2R 380/3/50 Type T 1	H-44330 KK (FR.) 505USS	
Condenser	X2724X22	Natl. Bd. 54403	
Oil Reservoir	X2724X41	Natl. Bd. 54404	
Evaporator	X2724X14	Natl. Bd. 54405	

STATUS: Operational

REMARKS: Refrigerant Charge 500# of R-22

5k2

SER/COM #4B

DATE _____

IMPORTER: _____ DIB L/C# _____

LOCATION: _____ U.S. L/C _____

SERVICE: _____ AMOUNT _____

EQUIPMENT IDENTIFICATION

#1	TYPE Brine Pump & Motor	MODEL FR. X213JM	SERIAL P/N 6-333002-02
	Type SC	Discharge size 2½"	1750 RPM
#2	Brine Pump & Motor	FR. S213JM	P/N 6-333002-02
	Type SC	Discharge size 2½"	1750 RPM

STATUS: _____

REMARKS: _____

EQUIPMENT VALUE

Equipment value will be considered in two parts. PART #1 will determine if the net sale value of the equipment as indicated by Mr. Matava and Mr. Stillson of Dunham-Bush appear to reflect reasonable pricing. Pricing consistency with competitive pricing quotations will also be considered. PART #2 will determine if the net sale price established in PART #1 is consistent with the final invoice. As stated by AID funding regulations the final invoice amount must reflect reasonable pricing.

PART #1

Competitive quotations were not obtainable on this specific project from the Egyptian Bank, D.I.B. Therefore, the contractor does not have specific competitive pricing information available on this project for evaluation. It is strongly recommended that competitive bids be obtained prior to issuing a letter of credit and kept on file by the lending institution. However, based on previous project experience the "NET SALE PRICE" indicated by Mr. Matava and Mr. Stillson appear to be reasonable.

As stated in the equipment identification section, only one piece of Dunham-Bush equipment, (the IPCX 500 packaged chiller) was installed under this letter of credit. Two pumps arrived after system start-up but will not be included in this evaluation. The pumps are not in use and the importer was forced to purchase pumps locally due to the late shipment.

The sales value for the chiller is stated in two documents:

Dunham-Bush Production Order EA 10063B	$53,410.00
Interview Report from Mr. Matava and Mr. Stillson of Dunham-Bush	$53,410.00

510

With the consistency of the above documentation and the previous project experience, of the contractor, the conclusion has been made that $53,410.00 does appear to reflect a reasonable market value for the installed equipment F.O.B. Factory.

PART #2

Consistency between the Invoice Amount and the "NET SALE VALUE" was established as follows:

Dunham-Bush Invoice No. EA 10063 (5-25-79)	$130,000.00
Less "NET SALE VALUE" of installed equipment	($53,410.00)
	$76,590.00

Therefore, $76,590.00 was retained for packaging, freight, insurance and additional profit. This dollar amount represents a mark-up of 143% of the "NET SALE VALUE". A mark-up of this magnitude appears to be a violation of the "Price Provisions" regulation for the use of AID funds. The regulation states, "No funds made available under this Act shall be used for the purchase in bulk of any commodities at prices higher than the market price prevailing in the United States at the time of purchase, adjusted for differences in the cost of transportation to destination, quality, and terms of payment".

It should also be noted that documentation supplied from Dunham-Bush (Sillcox Order No. 9916-CE) indicated freon and solder totaling $24,001.52 were bought by C.A.C. Corporation for this project (Co-Operative Chicken Farmers Ice Plant). These items were not listed on the Proforma Invoices dated 4-26-78 or 12-25-78 or the Final Invoice dated 5-25-79.

571

These items were not found on the job site location nor were they delivered to the job site according to the project importer. Quantities of the items listed on the Sillcox Invoice are in excess of the requirements for one facility of this size. If these items were purchased for this project the necessity, present location and quantity of these items should be explained by C.A.C. Corporation.

EQUIPMENT CAPABILITY

The expected equipment performance capability is stated by two project documents: the Bank's Appraisal Report (D.I.B.) and by the Project Contract.

> D.I.B. APPRAISAL REPORT - The Development Industrial Bank's Appraisal Report stated that the original report was based on 1000 block of ice/day (25 tons). However, a letter dated 2-7-79 revised the anticipated capacity to 3000 block of ice/day. A second letter also revised the letter of credit amount from $86,680.00 to $130,000.00.
>
> PROJECT CONTRACT - The contract dated 12-5-79 states in the introduction, "production capacity: three thousand ice slabs daily".

The importer stated to the contractor that he anticipated a daily production of 3000 slabs of ice per day. As outlined above this expected performance is identical to that listed in the project documents. However, the importer also stated that the actual daily ice production was only 2400 slabs of ice per day.

The contractor agrees that C.A.C. Corporation should indeed take the necessary steps to increase production for an additional 600 blocks of ice per day. However, the purpose

572

of this report section is to establish if additional major equipment purchases are required to deliver the expected capacity. The reported production is 80% of that expected and the contractor feels that production could be increased by field modifications, such as improved brine circulation and an improved condenser water system.

The present condenser water comes directly from a well without water treatment. This system for condenser water will cause rapid foulding of the condenser and will result in decreased machine capacity as well as high maintenance costs for condenser cleaning or tube replacement.

To summarize, field modifications are required to increase production by 600 slabs of ice per day. The need for purchase of additional major equipment such as a new or larger chiller may not be required.

SERVICE AND MAINTENANCE

As stated in the introduction both parts and labor are necessary for equipment operation and future maintenance.

PARTS - Parts will be considered by two classifications. Major system components and maintenance or operational parts and supplies.

**System Components such as rings, shafts or compressor components are not included on this project. All parts itemized for this project are maintenance parts or supplies (see next paragraph). Considering that service labor to perform a major overhaul would come from the United States, the contractor agrees that no parts of this type need to be inventoried at the job site.

**Maintenance parts and supplies consist of parts that are used in the normal operation of equipment. Since there is not a universal parts numbering system Dunham-Bush must be relied upon to provide parts identification information. Parts lists with the associated identification numbers are included as Exhibit E-2 and Exhibit E-6.

Two maintenance parts lists have been developed for the IPCX package chiller, which is the only major piece of equipment installed on this project. This first parts list (Exhibit E-1) was developed by the Dunham-Bush regional representative in Athens. This appears to be a complete list of all replaceable chiller parts. A second list of recommended spare parts is shown in Exhibit E-2 titled "Replacement Parts List for 50 HZ FL Pkg. Chiller". This list was developed in Hartford, Connecticut by Dunham-Bush. Recommended spare parts numbers are preceeded by an asterisk. The contractor feels that the shorter list presented in Exhibit E-2 will provide reasonable insurance against excessive down time repairs. However, if the importer feels that down time is critical enough to justify the expense (in excess of $25,000.00) of parts listed in Exhibit E-1, the contractor would recommend purchase of a complete second chiller for stand-by use. For convenience in evaluating additional parts purchases the following parts price lists are included:

D & B PCX/DBX Consolidated Parts Price List	Exhibit E-3
D & B PCX/DBX Hermetic Oil Pump Parts Price List	Exhibit E-4
D & B PCX/DBX Centrifugal Pump Parts Prices	Exhibit E-7

514

It should be noted that parts pricing indicated on the recommended list from Athens (Exhibit E-1) is not identical to parts pricing shown in Exhibit E-3. Parts prices from different sources should be evaluated prior to any purchases.

LABOR - Labor may also be considered by the same two classifications as parts, major system component labor and maintenance labor.

**Service work for major overhauls or replacement of major system components was not found to be available locally. According to the regional sales office for Dunham-Bush, in Athens, start-up and major systems repair labor would be supplied from the United States.

**Maintenance or operational labor must be supplied locally. For this project the operating engineer is Mohammad Helaby. Mr. Helaby keeps an hourly log which documents machine performance. The contractor feels that he could provide the necessary operating labor required for this equipment. Mr. Helaby does not have controls repair experience and maintenance service experience. Therefore, it is also recommended that maintenance labor be performed by a qualified service agent or individual familiar with Dunham-Bush equipment, such as Mr. Salah Botros used by Badi El Hanafy in Aiat. The initial step toward proper operation and maintenance is obtaining and following the manufacturer's O & M manuals. The appropriate IPCX Chiller operating and maintenance manual (Exhibit E-5) is included at the conclusion of this report section. Installation, operation and maintenance literature is also included for the Type A9 Centrifugal Pumps (Exhibit E-8).

575

(Chicken Farmer's Ice Plant)

SER/COM #4B
DUNHAM-BUSH LITERATURE
EXHIBIT INDEX

EQUIPMENT	REPLACEMENT PARTS LIST	PARTS PRICES	OPERATIONAL & MAINTENANCE MANUALS	RECOMMENDED SPARE PARTS LIST	ALTERNATE SPARE PARTS LIST	
Model IPCX-500 Pkg. Chiller	E-2	E-3 E-4	E-5	E-2	E-1	
Model A9 Pumps	E-6	E-7	E-8			

Exhibit E-1

LC/20095-(DIB) 62113 (U.S.)

AIR CONDITIONING Co. LTD.

HEATING · REFRIGERATION · AIR CONDITIONING

ATHENS · 701 September 9, 1980
3, KATSANDONI STR. · TEL. 646.5968
CABLES: AIRCONTED · ATHENS

COOPERATIVE CHICKEN FARMERS
Association of 23d July
CAIRO - EGYPT

PROFORMA INVOICE

Qty	DESCRIPTION	P.N.	PRICE US$ UNIT	TOTAL
	SPARE PARTS FOR A PCX-500-05 DUNHAM BUSH COMPRESSOR MADE IN USA			
1	Suct.line compan.flange gasket	GKT-314	7.00	7.00
3	Suction gasket	GKT-380	10.30	30.90
3	Disch.line gaskets	GKT-248	7.50	22.50
1	Indicator assy.	IDR-56A	216.00	216.00
2	Gaskets	GKT-250	3.45	6.90
1	Motor coupling	CPL-180		4367.00
1	Suction check valve	VAL-725		2107.00
1	Discharge chack valve	VAL-727		787.30
1	Solenoid valve less coil	VAL-902T5		608.35
1	Solenoid valve coil	COL-123T1		42.20
1	Solenoid valve with coil	VAL-774		23.60
1	Oil ejector,jet pump	PMP-102		93.25
1	Unload.solenoid valve assy	VAL-509A		550.20
3	Solenoid valve less coil	VAL-488	58.95	176.85
2	24 Volt coil	COL-122T41	36.30	72.60
1	120 Volt coil	COL-122T40	36.30	36.30
3	Metering valve	VAL-547	27.45	82.35
1	Water regul.valve	VAL-448		960.30
2	Condenser relief valve	VAL-735T2	140.70	281.40
1	Inlet head gasket	GKT-260		35.15
1	Return head gasket	GKT-261		27.00
2	Oil sump heater	HTR-71	170.00	340.00
1	Oil pump Assy (230V)	XFRK-4T2		51[illegible].10
1	Relief valve	VAL-720		325.90
1	Oil sump level sight glass	GLS-16A		48.00
1	Glass	GA-210		4.10
1	Retaining nut	GA-211		5.80
1	Back-up ring	GA-212		1.25
2	Gasket	GKT-517	1,55	3.10
3	Oil line gaskets	GKT-62	2.05	6.15
1	Oil line check valve	VAL-753		567.00

To be carried forward ..$ 16912.35

./..

COOPERATIVE CHICKEN FARMERS
CAIRO - EGYPT

Sept.9,1980

PROFORMA INVOICE Page 2

Qty	Description	P.N.	PRICE US$ Unit	Total
1	Main injection gasket	GKT-383		11.05
2	Oil line injection gasket	GKT-340	0.75	1.50
2	Oil filter ring	RNG-294T1	7.05	14.10
3	Oil filter	FLR-125	45.60	136.80
2	Ring	RNG-293	0.55	1.10
2	Ring	RNG-238	1.20	2.40
1	Flow switch	SWT-119		328.00
1	Chiller relief valve	VAL-735T1		149.15
2	Pilot expansion valve	VAL-454	151.25	302.50
1	Expansion valve	VAL-460		754.50
1	Expansion valve	VAL-539		737.50
2	Chiller inlet head gasket	GKT-350T5	46.35	92.70
1	Chiller returm head gasket	RNG-170		54.20
2	Filter drier head gasket	GKT-334	4.65	9.30
5	Filter drier replac.block	BLK-41	75.30	376.50
1	Temperature sensor control	CNT-233T4		327.20
2	Refrigerant line gaskets	GKT-60	1.35	2.70
1	Circuit breaker 16A (2CB)	BKR-74		36.20
1	Circuit breaker 9A (1CB)	BKR-75		36.20
1	Suction pressure SW (2PS)	CNT-167		87.50
1	Pressure switch (1PS)	CNT-175		111.30
1	Oil temp.switch (12TAS)	CNT-231		111.00
1	Load controller (TLC)	CNT-232T2		305.80
1	Freeze protecton swicth (2TAS)	CNT-55		88.70
1	Suction pressure gage (2GA)	GAG-40		43.20
1	Discharge pres.gage (3GA)	GAG-41		43.20
1	Discharge pres.gage (4GA)	GAG-41		43.20
1	Temp.gage (1GA)	GAG-47		250.50
3	Pilot light red	LMP-10	13.40	40.20
2	Start-up & antirec.timer light,yell.	LMP-11	13.40	26.80
3	Relay	RLY-126	178.00	534.00
1	Relay,limit	RLY-135		184.20
1	Oil failure switch (3PS)	SWT-80		533.85
1	On-off swicth (1SS)	SWT-82		54.35
1	Antirecycle timer (1TR)	TMR-114		203.30
1	Elapsed time indic. (1TR)	TMR-86		24[illegible].00
1	Timer,oil failure (2TR)	TMR-83		445.00
3	Timer	TMR-83	445.00	1335.00
1	Transformer 24V-For TLC (2T)	TFS-26		30.00

Total sum Page 2 US$ 8089.70
Brought forward from Page 1 US$ 13912.35

TOTAL NET C.I.F. ALEXANDRIA,EGYPT ..... US$ 25002.05

==========

AIR CONDITIONING Co.Ltd.

Exhibit E-2

IPCX UNITS REPLA MENT PARTS LIST DESCRIPTION		D/B PA NO. STANDARD	ALTERNATE	QTY
380/3/50 CO[illegible] L BOX 115-1-50		X2724X03		
CIRCUIT BREAKER 16AMP(2CB)	*	BKR74		1
CIRCUIT BREAKER 9AMP(1CB)	*	BKR 75		1
LOW SUCTION PRESS SW(2PS)		CNT 167		1
DUAL PRESSURE SW.(1PS)		CNT175		1
HIGH OIL TEMP. SW. (12TAS)		CNT231		1
TEMP LOAD CONTROLLER(TLC)	*	CNT232T2		1
FREEZE PROTECTION SW (2TAS)		CNT 55		1
SUCTION PR GAUGE (2GA)		GAG40		1
DISCHARGE PR GAUGE (3GA)		GAG41		1
OIL & DISCH. PR GAUGE (4GA)		GAG 41		1
OIL TEMP. GAUGE (1GA)		GAG47		1
PILOT LIGHT, POWER ON (1LT) RED		LMP10		1
PILOT LIGHT, SAFETY SW'S (2LT) RED		LMP 10		1
PILOT LIGHT, OIL PR. FAILURE (3LT) RED		LMP10		1
PILOT LIGHT, ANTI RECYCLE TIMER (4LT) YELLOW		LMP11		1
PILOT LIGHT, START UP DELAY (5LT) YELLOW		LMP11		1
R[illegible], MASTER CONTROL (1CR)	*	RLY126		1
RELAY, COMP. CONTROL (3CR)	*	RLY126		1
RELAY, HOT GAS & BLOCKING (6CR)		RLY126		1
RELAY, LIMIT (8CR)		RLY135		1
SWITCH, OIL PR FAILURE (3PS)		SWT80		1
SWITCH, ON-OFF (1SS)		SWT 82		1
TIMER, ANTI-RECYCLE (1TR)	*	TMR114		1
TIMER, ELAPSED TIME INDICATOR (1TR)		TMR86		1
TIMER, OIL PUMP SHUT DOWN (3TR)	*	TMR 83		1
TIMER, OIL PR. FAILURE (2TR)	*	TMR83		1
TIMER, START UP DELAY (4TR)	*	TMR 83		1
TIMER, UNLOADED START (7TR)	*	TMR 83		1
TRANSFORMER 24V-FOR TLC (2T)		TSF26		1

DUNHAM-BUSH, INC.

WEST HARTFORD DIVISION

PART NAME REPLACEMENT PARTS LIST FOR 50HZ FL PKG CHILLER

ENGINEERING FILE NO. X-2724

SCALE	DRAWN BY	CHECKED	UNLESS OTHERWISE SPECIFIED TOLERANCES
—	NAME	NAME	FRACTIONAL DIMENSIONS ±
	DATE	DATE	DECIMAL DIMENSIONS ± .005
			ANGLES ±

519

DESCRIPTION	D/B P/N STANDARD	D/B P/N ALTERNATE	QTY
CONDENSER ASSEMBLY 18	X2724 X22		
CONDENSER RELIEF VALVE	VAL 735T2		2
INLET HEAD GASKET	GKT 260		1
RETURN HEAD GASKET	GKT 261.		1
OIL SUMP ASSEMBLY 24	X2724X41		
OIL SUMP HEATER	HTR 71		2
OIL PUMP ASSEMBLY	X2724X23		1
RELIEF VALVE	VAL 720		1
OIL SUMP LEVEL SIGHT GLASS	GLS 16A		1
GLASS	GA 210		1
RETAINING NUT	GA 211		1
BACK-UP RING	GA 212		1
GASKET	GKT 517		2
OIL LINE GASKETS	GKT 62		3
OIL LINE CHECK VALVE	VAL 753		
MAIN INJECTION GASKET	GKT 383		1
INJECTION OIL LINE GASKET	GKT 340		2
OIL FILTER ASSEMBLY	FLR 110AT3		
OIL FILTER RING	RNG 294 T1		2
FILTER ELEMENT	FLR I25		3
FILTER ALARM GASKETS	RNG 293		2
	RNG 238		2

4	600-0193	12/13/77	UPDATED
3	600-0180	7/7/77	UPDATED
2	600-0153II	6/1/76	UPDATED

This drawing contains designs and other information which are the property of DUNHAM-BUSH, INC. This drawing may not, in whole or in part, be duplicated or disclosed or used for manufacture of part disclosed herein, without the prior written permission of DUNHAM-BUSH, INC.

DUNHAM-BUSH, INC.
WEST HARTFORD CONN 06110 U.S.A.
WEST HARTFORD DIVISION

PART NAME REPLACEMENT PARTS LIST FOR TPCX 500-0 PKG CHLRS

MAT'L ENGINEERING FILE NO. X-2724

SCALE	DRAWN BY	CHECKED	UNLESS OTHERWISE SPECIFIED TOLERANCE
	NAME WK	NAME NG	FRACTIONAL DIMENSIONS ±
			DECIMAL DIMENSIONS ±
	DATE 9-28-73	DATE 12-1-75	ANGLES ± 2 OF 4

DESCRIPTION	D/ RT NO. STANDARD	D/ RT NO. ALTERNATE	QTY.
COMPRESSOR ASSEMBLY	2510DLF1L0D		
SUCTION LINE COMPANION FLANGE GASKET (6" 300#)	GKT 314		1
SUCTION GASKET (8" 150#)	GKT 380		3
DISCHARGE LINE GASKETS (6" 300#)	GKT 248		3
INDICATOR ASSEMBLY (SLIDE VALVE)	IDR 56A		1
GASKET (4" 300#)	GKT 250		2
			1
MOTOR COUPLING	CPL 180		1
SUCTION CHECK VALVE 8	VAL 725		1
DISCHARGE CHECK VALVE	VAL 727		1
CHILLER ASSEMBLY 22	X2724X 14		
FLOW SWITCH	SWT 119		1
CHILLER RELIEF VALVE	VAL 735 T.1		
PILOT EXPANSION VALVE	VAL 454		2
EXPANSION VALVE	VAL 460		1
	VAL 539		1
CHILLER INLET HEAD GASKET	GKT 350TS		2
CHILLER RETURN HEAD GASKET	RNG 170		1
FILTER DRIER HEAD GASKET	GKT 334		2
FILTER DRIER REPLACEMENT BLOCK	BLK 41		5
TEMPERATURE SENSOR CONTROL	CNT 233T 4		1
REFRIGERANT LINE GASKETS	GKT 60		2

3	600-0193	12/13/77	UPDATED
2	600-0153	6/1/76	UPDATED
-1	600-0130	12-17-75	UPDATED

DUNHAM-BUSH, INC.

WEST HARTFORD DIVISION

PART NAME REPLACEMENT PARTS LIST FOR IPCX 500-C PKG CHILL

ENGINEERING FILE NO. X-2724

SCALE	DRAWN BY	CHECKED	UNLESS OTHERWISE SPECIFIED TOLERANCE
—	NAME	NAME	FRACTIONAL DIMENSIONS ±
	DATE	DATE	DECIMAL DIMENSIONS ±
			ANGLES ±

SUPERSEDES

3024

81

DESCRIPTION	D/B PART NO. STANDARD	D/B PART NO. ALTERNATE	QTY.
CAPACITY CONTROL	OPT25T3		
SOLENOID VALVE/LESS COIL	VAL 902T5		1
SOLENOID VALVE COIL	COL 123T1		1
UNLOADED START SOL. VALVE W/COIL	OPT24T3 VAL774		1
ACCESSORIES			
OIL	OIL 4		65 GAL.
OIL EJECTOR JET PUMP	PMP 102		1
UNLOAD SOLENOID VALVE ASSEMBLY	VAL 509.A		1
SOLENOID VALVE/LESS COIL	VAL 488		3
24 VOLT COIL	COL 122T41		2
120 VOLT COIL	COL 122T40		1
METERING VALVE	VAL 547		3
OIL COOLER ASSEMBLY			1
WAT. REG. VALVE	VAL 448		1

4	600-0193	12/13/77	UPDATED
3	600-0180	7-7-77	UPDATED
2	600-0153-II	6-1-76	UPDATED
1	600-0129	3-12-76	VAL509A WAS VAL670A

This drawing contains designs and other information which are the property of DUNHAM-BUSH, IN
This drawing may not, in whole or in part, be duplicated or disclosed or used for manufacture of
part disclosed herein, without the prior written permission of DUNHAM-BUSH, INC.

DUNHAM-BUSH, INC.
WEST HARTFORD CONN 06110 USA
WEST HARTFORD DIVISION

PART NAME REPLACEMENT PARTS LIST FOR PCX1500-0 PKG CHLRS

MAT'L ENGINEERING FILE NO. X-2724

SCALE	DRAWN BY	CHECKED	UNLESS OTHERWISE SPECIFIED TOLERANCE
—	NAME WK	NAME NC	FRACTIONAL DIMENSIONS ±
	DATE 9-28-73	DATE 12-1-75	DECIMAL DIMENSIONS ±
			ANGLES ± 4 OF 4

Exhibit E-3

DUNHAM-BUSH

PCX/DBX CONSOLIDATED PARTS PRICE LIST

Refer to latest revision of Form 1278 for Terms of Sale.

Terms of Shipment: F.O.B. Shipping Point.

All prices subject to change without notice.

Parts will be invoiced at prices in effect at the time of shipment.

All components and controls listed are for standard units only, unless otherwise noted.

Minimum Billing is $25.00.

ORDERING INSTRUCTIONS

1. When ordering, specify Model, Serial No., "X" No., and other pertinent information on the face of the order.
2. Parts selections should be made from the "RPL" furnished with the unit where possible. For convenience, we have included several pages listing field replacement kits with a brief description of each at the back of this form.
3. Send all orders to: Dunham-Bush, Inc., Service Parts Dept.
   179 South St., West Hartford, Conn. 06110
4. All prices are for one each part or kit as applicable.
5. Federal, state, local or other taxes are not included in the attached prices.
6. All orders requiring Special Handling, will have a $50 net additional charge invoiced or actual cost, whichever is higher. This includes delivery to the airport, bus station, etc.

58

PART NO.	DESCRIPTION	LIST PRICE
BKR74	CIRCUIT BREAKER	28.62
BKR75	CIRCUIT BREAKER	28.62
BLK41	DRIER BLOCK	59.57
BLK42	DRIER BLOCK	23.59
CNT55	CONTROL, TEMP	70.18
CNT137T1	CONTROL, MTR PRT	100.17
CNT167	CONTROL, LOW PRESS	69.22
CNT175	CONTROL, DUAL PRESS	88.03
CNT206	CONTROL, TEMP	63.55
CNT208	CONTROL, TEMP	1,020.13
CNT231	CONTROL, TEMP	87.82
CNT232	CONTROL, TLC	963.31
CNT233T1	CONT SENR 35/55DEG	101.28
CNT233T2	CONT SENR 55/75DEG	241.88
CNT233T3	CONT SENR-35/-15DEG	223.71
CNT233T5	CONT SENR-15/10DEG	258.84
CNT233T5	CONT SENSR 10/35DEG	258.84
CNT242	CONTROL, LOW PRESS	64.13
CNT244	CONTROL, TEMP	67.89
CNT249	CONTROL, PRESS-DIFF	514.00
CNT276	CONTROL, PRESS	274.06
CNT277	CONTROL, PRESS	592.60
COL122T1	COIL 120V	28.62
COL122T40	COIL 120V	28.62
COL122T41	COIL 24V	28.62
COL123T1	COIL 120V	33.39
FLR47A	FILTER, SUCTION	87.42
FLR48A	FILTER, SUCTION	125.95
FLR49A	FILTER, SUCTION	102.78
FLR71	FILTER, OIL	22.79
FLR95T1	FILTER, SUCTION 4	243.28
FLR95T2	FILTER, SUCTION 5	307.33
FLR95T3	FILTER, SUCTION 8	390.80
FLR107T1	FILTER, OIL	400.88
FLR107T2	FILTER, OIL	489.70
FLR125	FILTER, OIL	36.06
GAG40	GAUGE	34.19
GAG41	GAUGE	34.19
GAG52	GAUGE	99.38
GKT143	GASKET	15.42
GKT222	GASKET	20.50
GKT223	GASKET	15.70
GKT224	GASKET	6.54
GKT229	GASKET	5.14
GKT238	GASKET	.60
GKT242	GASKET	17.56
GKT243	GASKET	24.38
GKT248	GASKET	5.95
GKT250	GASKET	2.73
GKT252	GASKET	7.02
GKT257	GASKET	4.61
GKT258	GASKET	3.34
GKT259	GASKET	25.05
GKT260	GASKET	27.78
GKT261	GASKET	21.37
GKT265	GASKET	40.07
GKT266	GASKET	16.70
GKT267	GASKET	2.67
GKT269	GASKET	1.34
GKT279	GASKET	52.15
GKT280	GASKET	52.15
GKT313	GASKET	21.43
GKT314	GASKET	5.54
GKT318	GASKET	13.70
GKT329	GASKET	1.40
GKT334	GASKET	3.68
GKT350T1	GASKET	15.62
GKT350T2	GASKET	21.23
GKT350T3	GASKET	40.07
GKT350T4	GASKET	33.59
GKT350T5	GASKET	36.67
GKT380	GASKET	8.15
GKT382	GASKET	18.09
GKT383	GASKET	8.75
GKT387	GASKET	21.71
GKT415	GASKET	10.48
GKT416	GASKET	9.41
GKT417	GASKET	8.75
GKT427	GASKET	30.05
GKT429T1	GASKET	70.12
GKT429T2	GASKET	70.12
GKT431T1	GASKET	55.43
GKT431T2	GASKET	52.43
GKT433T1	GASKET	61.78
GKT433T2	GASKET	61.78
GKT435T1	GASKET	80.80
GKT435T2	GASKET	80.80
GKT446	GASKET	14.09
GKT447	GASKET	14.89
GKT448	GASKET	12.36
GKT466	GASKET	11.35
GKT467	GASKET	11.62
GKT468	GASKET	11.09
GKT503	GASKET	83.48
GKT504	GASKET	89.16
GKT505	GASKET	101.84
GKT506	GASKET	111.86
GKT507	GASKET	115.20
GKT508	GASKET	81.20
GKT509	GASKET	86.81
GKT510	GASKET	100.17
GKT511	GASKET	110.19
GKT512	GASKET	113.53
GKT117	GASKET	1.20
GLS16A	SIGHT GLASS ASSY	38.00
HTR71	HEATER, OIL	134.43
IDR46	INDICATOR, LIQ 5/8	21.78
IDR49	INDICATOR, LIQ 7/8	21.78
IDR56A	IND ASSY, LESS SCALE	170.89
IDR57A	IND ASSY, LESS SCALE	183.51
KIT250	KIT, CAM SWITCH	59.96
LMP10	LIGHT, RED	10.60
LMP11	LIGHT, YELLOW	10.60
LMP12	LIGHT, WHITE	10.60
LMP13	LIGHT, WHITE	9.06
LMP14	LIGHT, AMBER	13.04
LMP15	LIGHT, RED	11.50
PMP91T3	PUMP, OIL VIKING	1,444.99
PMP91T4	PUMP, OIL VIKING	1,689.59
PMP91T6	PUMP, OIL VIKING	2,212.64
RLY126	RELAY	140.77
RLY127	RELAY	193.50
RLY129	RELAY	99.22
RLY133	RELAY	19.29
RLY134	RELAY	27.40
RLY135	RELAY FLIP PACK	145.75
RNG104	RING	2.20
RNG129	RING	30.98
RNG130	RING	23.11
RNG13	RING	32.39
RNG132	RING	32.52
RNG135	RING	1.06
RNG136	RING	7.53
RNG144	RING	5.09
RNG145	RING	4.56
RNG146	RING	5.09
RNG147	RING	7.37
RNG148	RING	3.07
RNG162	RING	40.07
RNG164	RING	17.36
RNG165	RING	4.67
RNG166	RING	1.96
RNG167	RING	1.01
RNG170	RING	42.88
RNG173	RING	31.59
RNG181	RING	28.92
RNG182	RING	19.71
RNG202	RING	2.23
RNG203	RING	24.17
RNG204	RING	.21
RNG205	RING	2.44
RNG206	RING	1.86
RNG207	RING	3.23
RNG209	RING	4.45
RNG210	RING	3.02
RNG211	RING	3.66
RNG217T3	RING	7.10
RNG217T4	RING	99.85
RNG217T5	RING	193.34
RNG229	RING	41.18
RNG230	RING	1.27
RNG236	RING	.95
RNG237	RING	.80
RNG238	RING	.95
RNG239	RING	.80
RNG255	RING	1.70
RNG256	RING	.69
RNG275	RING	.42
RNG282T2	RING	3.60
RNG283T3	RING	5.19
RNG283T4	RING	3.98
RNG293	RING	.42
RNG294T1	RING	5.57
SRA46T1	STRAINER, OIL	66.78
SRA52	STRAINER, OIL	43.99
SRA64A	STRAINER ASSY, OIL	FACTORY
SRA79A	STRAINER ASSY, OIL	FACTORY
SRA80A	STRAINER ASSY, OIL	FACTORY
SWT61	SWITCH, FLOW	104.78
SWT71	SWITCH, AUX	6.89
SWT80	SWITCH, PRESS-DIFF	422.30
SWT82	SWITCH	42.98
SWT83	SWITCH	16.96
SWT89	SWITCH, REED	41.27
SWT91	SWITCH	56.94
TMR79	TIMER, ELAPSED	20.78
TMR83	TIMER	351.92
TMR103	TIMER	162.68

584

PART NO.	DESCRIPTION	LIST PRICE
TMR105	TIMER	58.41
TMR106	TIMER	489.72
TMR110	TIMER	73.60
TMR114	TIMER	160.80
TMR135	TIMER	64.55
TOL1	TOOL,INNER LKNUT 163	298.18
TOL2	TOOL,INNER LKNUT 204	292.17
TOL3	TOOL,INNER LKNUT 255	440.00
TOL4	TOOL,LOCKNUT SPINDLE	170.29
TOL5	TOOL,BEARING LOCKNUT	1,402.38
TOL6	TOOL,OUTER NUT 163	292.17
TOL7	TOOL,OUTER NUT 204	347.26
TOL8	TOOL,OUTER NUT 255	466.00
TOL9	TOOL,SLIPPER SEAL	176.00
TOL10	TOOL,SEAL ASSY	188.00
TOL11T1	TOOL,SEAL ASSY	834.75
TOL11T2	TOOL,SEAL ASSY	1,101.87
TOL11T3	TOOL,SEAL ASSY	1,480.00
TOL11T4	TOOL,SEAL ASSY	1,402.38
TOL12	TOOL,SLIDE VALVE	1,080.00
TOL13	TOOL,BUSHING	26.04
TOL14	TOOL,STATOR PULLER	387.32
TOL15	TOOL,THRUST BRG	357.27
TOL16T1	TOOL,COLLAR ASSY 163	294.23
TOL16T2	TOOL,COLLAR ASSY	227.05
TOL16T3	TOOL,COLLAR ASSY	293.83
TOL17	TOOL,TORQUE WRENCH	1,402.38
TOL18	TOOL,TORQUE WRENCH	1,402.38
TOL19	TOOL,TORQUE WRENCH	645.00
TOL20	TOOL,SPIND GAGE PLUG	380.00
TOL22	TOOL,AIR CYL ADJ	1,035.09
TOL23T1	TOOL,MOTOR HOOK	934.92
TOL23T2	TOOL,MOTOR HOOK	934.92
TOL24	TOOL,SLIPPER SEAL	160.27
TSF26	TRANSFORMER	23.69
VAL368	VALVE,CHECK	32.70
VAL448	VALVE,WATER REGULATR	680.49
VAL449	VALVE,WATER REGULATR	961.10
VAL454	VALVE TX	119.73
VAL456	VALVE,GLOBE	9.12
VAL460	VALVE,TX	588.41
VAL466	VALVE,TX	1,337.56
VAL488	VALVE,SOLENOID	46.64
VAL494	VALVE,TX	622.27
VAL509A	VALVE ASSY, UNLOAD	441.55
VAL537	VALVE,TX	660.86
VAL538	VALVE,TX	887.11
VAL539	VALVE,TX	583.53
VAL547	VALVE,GLOBE	21.71
VAL585	VALVE, TX	887.11
VAL676	VALVE, TX	119.73
VAL691T1	VALVE, TX	307.93
VAL691T2	VALVE, TX	451.98
VAL691T3	VALVE, TX	451.98
VAL691T4	VALVE, TX	470.83
VAL691T5	VALVE,TX	470.83
VAL691T6	VALVE,TX	392.36
VAL720	VALVE,PRESS REG	257.79
VAL726	VALVE,CHECK	691.12
VAL727	VALVE,CHECK	622.80
VAL734T1	VALVE,RELIEF	81.46
VAL734T2	VALVE,RELIEF	81.46
VAL734T3	VALVE,RELIEF	81.46
VAL735T1	VALVE,RELIEF	117.98
VAL735T2	VALVE,RELIEF	111.30
VAL735T3	VALVE,RELIEF	117.98
VAL769	VALVE,PRESS REGULATR	213.86
VAL784	VALVE,PRESS REGULATR	429.94
VAL820	VALVE,TX	1,284.24
VAL833	VALVE,PRESS REGULATR	259.81
VAL902T1	VALVE,SOLENOID	130.06
VAL902T3	VALVE,SOLENOID	193.13
VAL902T10	VALVE,SOLENOID	78.65
VAL919	VALVE,TX	205.64
XFRK4T1	OIL PUMP ASSY 208V	FACTORY
XFRK4T2	OIL PUMP ASSY 230V	FACTORY
XFRK4T3	OIL PUMP ASSY 460V	FACTORY
XFRK5	OIL PUMP CONV KIT	FACTORY
XFRK7T2	FLD REP KIT SHF SEAL	849.06
XFRK7T4	FLD REP KIT SHF SEAL	983.68
XFRK7T6	FLD REP KIT SHF SEAL	973.08
XFRK7T7	FLD REP KIT SHF SEAL	1,013.36
XFRK7T8	FLD REP KIT SHF SEAL	1,131.02
XFRK7T9	FLD REP KIT SHF SEAL	1,719.32
XFRK7T10	FLD REP KIT SHF SEAL	1,631.34
XFRK7T11	FLD REP KIT SHF SEAL	1,933.44
XFRK7T12	FLD REP KIT SHF SEAL	1,335.60
XFRK7T14	FLD REP KIT SHF SEAL	1,425.70
XFRK7T15	FLD REP KIT SHF SEAL	1,219.00
XFRK7T16	FLD REP KIT SHF SEAL	1,257.16
XFRK7T17	FLD REP KIT SHF SEAL	1,232.78
XFRK7T18	FLD REP KIT SHF SEAL	1,587.88
XFRK7T19	FLD REP KIT SHF SEAL	1,219.00
XFRK7T20	FLD REP KIT SHF SEAL	975.20
XFRK7T21	FLD REP KIT SHF SEAL	828.92
XFRK7T22	FLD REP KIT SHF SEAL	1,344.08
XFRK7T23	FLD REP KIT SHF SEAL	1,110.88
XFRK7T24	FLD REP KIT SHF SEAL	1,948.28
XFRK7T25	FLD REP KIT SHF SEAL	1,871.96
XFRK7T26	FLD REP KIT SHF SEAL	2,028.84
XFRK7T27	FLD REP KIT SHF SEAL	1,570.92
XFRK7T28	FLD REP KIT SHF SEAL	1,961.00
XFRK8T30	KIT,GASKET 163OD	323.01
XFRK8T31	KIT,GASKET 163HER	324.35
XFRK8T32	KIT,GASKET 204OD	203.54
XFRK8T33	KIT,GASKET 204HER	251.90
XFRK8T34	KIT,GASKET 255OD	309.72
XFRK8T35	KIT,GASKET 255HER	408.49
XFRK10T1	SEE PG 5 FOR DESCRIP	56.56
XFRK10T2	SEE PG 5 FOR DESCRIP	51.95
XFRK10T3	SEE PG 5 FOR DESCRIP	46.01
XFRK10T4	SEE PG 5 FOR DESCRIP	66.58
XFRK10T5	SEE PG 5 FOR DESCRIP	61.90
XFRK10T6	SEE PG 5 FOR DESCRIP	56.03
XFRK10T7	SEE PG 5 FOR DESCRIP	77.44
XFRK10T8	SEE PG 5 FOR DESCRIP	64.91
XFRK10T9	SEE PG 5 FOR DESCRIP	62.11
XFRK10T10*		99.04
XFRK11	FLD REP KIT,OIL F SW	536.85
XFRK19T1	FLDREP KIT,TLC35/55D	939.86
XFRK19T2	FLDREP KIT,TLC10/35D	990.02
XFRK19T3	FLDRP KIT,TLC-15/10D	981.87
XFRK19T4	FLDREPKITTLL-35/-15D	1,044.30
XFRK20T1	FLDREPKIT,TLC 35/55D	1,027.14
XFRK20T2	FLDREPKIT,TLC 10/35D	1,096.59
XFRK10T3	FLDREPKIT,TLC-15/10D	1,088.45
XFRK20T4	FLDREPKIT,TLC-35/-15	1,131.59
XFRK20T5	FLDREPKIT,TLC-55/-35	1,141.61
XFRK24T1	SEE PAGE5 FOR DESCR	1,093.25
XFRK24T2	SEE PAGE5 FOR DESCR	931.05
XFRK24T3	SEE PAGE5 FOR DESCR	1,016.25
XFRK24T4	SEE PAGE5 FOR DESCR	1,028.68
XFRK24T5	SEE PAGE5 FOR DESCR	1,209.39
XFRK24T6	SEE PAGE5 FOR DESCR	1,171.38
XFRK24T7	SEE PAGE5 FOR DESCR	1,021.67
XFRK24T8	SEE PAGE5 FOR DESCR	988.81
XFRK24T9	SEE PAGE5 FOR DESCR	1,090.32
XFRK24T10	SEE PAGE5 FOR DESCR	1,249.66
XFRK24T11	SEE PAGE5 FOR DESCR	1,178.80
XFRK24T12	SEE PAGE5 FOR DESCR	1,261.15
XFRK24T13	SEE PAGE5 FOR DESCR	1,142.34
XFRK25T1	FLDREPLKIT,REED SWIT	254.63
XFRK25T2	FDREPKIT,REEDSWTCAM	497.38
XFRK27T1*	SEE PAGE 5 FOR DESCR	1,332.87
XFRK27T2*	SEE PAGE 5 FOR DESCR	994.15
XFRK27T3	SEE PAGE 5 FOR DESCR	1,677.85
XFRK27T5*	SEE PAGE 5 FOR DESCR	3,057.53
XFRK27T6*	SEE PAGE 5 FOR DESCR	2,364.21
XFRK27T11	SEE PAGE 5 FOR DESCR	1,832.64
XFRK27T12	SEE PAGE 5 FOR DESCR	1,587.42
XFRK27T13	SEE PAGE 5 FOR DESCR	2,349.32
XFRK27T15	SEE PAGE 5 FOR DESCR	3,917.84
XFRK27T16	SEE PAGE 5 FOR DESCR	3,173.06
XFRK28	F R KIT,MTR HTR 255	286.83
XFRK29	F R KIT,MTR HTR 204	205.68
XFRK30	F R KIT,MTR HTR 163	204.21
XFRK31T1	SEE PAGE 5 FOR DESCR	1,066.15
XFRK31T2	SEE PAGE 5 FOR DESCR	4,171.88
XFRK31T3	SEE PAGE 5 FOR DESCR	1,038.77
XFRK31T4	SEE PAGE 5 FOR DESCR	4,163.00
XFRK31T5	SEE PAGE 5 FOR DESCR	1,031.75
XFRK31T6	SEE PAGE 5 FOR DESCR	4,323.60
XFRK31T7	SEE PAGE 5 FOR DESCR	1,128.25
XFRK31T8	SEE PAGE 5 FOR DESCR	4,420.43
XFRK31T9	SEE PAGE 5 FOR DESCR	1,189.09
XFRK31T10	SEE PAGE 5 FOR DESCR	4,472.99
XFRK31T11	SEE PAGE 5 FOR DESCR	1,294.00
XFRK31T12	SEE PAGE 5 FOR DESCR	5,573.46
XFRK31T13	SEE PAGE 5 FOR DESCR	1,201.04
XFRK31T14	SEE PAGE 5 FOR DESCR	5,492.05
XFRK31T15	SEE PAGE 5 FOR DESCR	1,326.66
XFRK31T16	SEE PAGE 5 FOR DESCR	5,619.34
XFRK31T17	SEE PAGE 5 FOR DESCR	1,677.38
XFRK31T18	SEE PAGE 5 FOR DESCR	6,015.54
XFRK31T21	SEE PAGE 5 FOR DESCR	1,046.11
XFRK31T22	SEE PAGE 5 FOR DESCR	3,743.89
XFRK31T23	SEE PAGE 5 FOR DESCR	1,016.73
XFRK31T24	SEE PAGE 5 FOR DESCR	3,734.94
XFRK31T26	SEE PAGE 5 FOR DESCR	3,788.16
XFRK31T28	SEE PAGE 5 FOR DESCR	3,885.00
XFRK31T30	SEE PAGE 5 FOR DESCR	3,937.55
XFRK31T32	SEE PAGE 5 FOR DESCR	4,214.57
XFRK31T34	SEE PAGE 5 FOR DESCR	4,733.10
XFRK31T36	SEE PAGE 5 FOR DESCR	4,860.39
XFRK31T38	SEE PAGE 5 FOR DESCR	5,256.66
XFRK32	SEE PAGE 5 FOR DESCR	222.31
XFRK33T1	SEE PAGE 5 FOR DESCR	153.27
XFRK33T2	SEE PAGE 5 FOR DESCR	341.25

PART NO.	DESCRIPTION	LIST PRICE
XFRK33T3	SEE PAGE 5 FOR DESCR	233.33
XFRK33T4	SEE PAGE 5 FOR DESCR	654.04
XFRK42	F R KIT, SLIDE VALVE	27.85
050014A1	IDR CONV 1610A/B	285.01
050014A2	IDR CONV 1615 A/B	270.19
050014A3	IDR CONV 2010	280.07
050014A4	IDR CONV 2013	293.30
050014A5	IDR CONV 2015	290.83
050014A6	IDR CONV 2510	306.19
050014A7	IDR CONV 2515	314.21
050053A1	F R KIT,SEAL 255	1,675.98
050053A2	F R KIT,SEAL 255	1,314.70
050053A3	F R KIT,SEAL 255	1,651.67
050053A4	F R KIT,SEAL 255	1,405.58
050053A5	F R KIT,SEAL 255	1,220.60
050110A2	VALVE,TX	743.53
05011A3	VALVE,TX	701.05
050110A4	VALVE,TX	802.17
050110A5	VALVE,TX	850.25
050110A6	VALVE,TX	1,128.44
050110A7	VALVE,TX	1,146.08
050147A1	LIQ INJ LINE ASSY	1,282.84
050147A2	LIQ INJ LINE ASSY	1,282.84
050155A1	GAUGE	40.74
050156A1	GAUGE	40.74
051068A1	F R KIT,MTR PRUT	105.71
050181A1	RELAY	73.03
050182A1	LAMP	3.66
050182A2	LAMP	3.66
050183A1	LIGHT	12.19
050216A2	VALVE,TX	466.77
050216A4	VALVE,TX	466.77
050266A1	VALVE,TX	166.58
050309A1	CORE, FILTER	22.15
050414A1	VALVE,TX	530.05
050800A1	RELAY,TIME	96.46
0609P65	VALVE RELIEF	38.80
0617610	SIGHT GLASS, LIQUID	24.54
050664A1	SEAL,VIKING PUMP	2.28

58

Exhibit E-4

DUNHAM-BUSH PRICES

FORM NO. 4632-1F
EFFECTIVE
MARCH 1981
(SUPERSEDES 4632-1E

PCX/DBX HERMETIC OIL PUMP REPLACEMENT PARTS PRICE

SELECTION

IF THIS PUMP IS ON THE UNIT	REPLACE IT WITH THIS PUMP & KIT OR KITS	ALSO SEND STRAINER ASSEMBLY
1. PMP 84 (OBSOLETE)	XFRK - 4 XFRK - 5	SELECT PROPER STRAINER FROM TABLE
2. PMP 86T1 (OBSOLETE)		
3. PMP 86T2 (OBSOLETE)		
4. PMP 88A	XFRK - 4	
5. PMP 90T1		
6. PMP 90T2		

PCX-H	120	150	180	230	290	350	400	450	500	580	630	700	750
Strainer	SRA 80A						SRA 79A	SRA 64A					
Oil Sep.	Spool						20"	24"	24"	24"	24"	24"	26"
								SEP – SUMP DIA					
PCX-O	120	150	180	230	290	350	400	450	500	580	630	700	750
Strainer	SRA 79A							SRA 64A					
Oil Sep.	16"	16"	16"	18"	18"	18"	20"	24"	24"	24"	24"	24"	26"
	SEP – SUMP DIA												
DBX	1610	1613	1615	2010	2013	2015							
Strainer	SRA 79A												
Oil Sep.	18"	18"	18"	20"	20"	20"							
	SEP – SUMP DIA												
ARPCX-120													
Strainer	SRA 79A												
Oil Sep.	20"												

PART NUMBER	DESCRIPTION	LIST PRICE See Note (1)
XFRK 4	REPLACEMENT OIL PUMP & GASKETS	$4,090.00
XFRK 5	PIPING CONVERSION KIT	246.00
SRA 64A	STRAINER ASSEMBLY	316.00
SRA 79A	STRAINER ASSEMBLY	274.00
SRA 80A	STRAINER ASSEMBLY	268.00

1. Ordering Instructions: Oil pump order will not be accepted unless it includes the following information:
   a) Oil pump motor voltage, phase, hertz
   b) Complete oil pump nameplate data, including Pump Part No. and Type No.
   c) Complete unit model no.
   d) Complete unit serial no.
   e) Engineering file no. ("X" No.)

2. If out of warranty the following credit will be issued depending on the condition of the returned pump as determined by the West Hartford Quality Control Department.
   a) Current Pump Models

	Credit List Deduct
1) Pump failure (other parts useable)	$1,514.00
2) Motor burnout (other parts useable)	1,293.00
3) Pump and motor failure (Housing and shaft useable)	946.00

   b) Obsolete pump model (No Credit)
   c) Follow RGB Procedure for returning the pump

3. Certain PCX/DBX units may have a special oil pump depending on the application, e.g. an open type pump may be supplied for explosion proof installations, etc. Supply all pump data to West Hartford, Order Service Department. Contact West Hartford Order Service for pricing and delivery.

PRICES AND SPECIFICATIONS SUBJECT TO CHANGE WITHOUT NOTICE.
FOR TERMS OF SALE REFER TO LATEST REVISION OF FORM 1278
PRICES F.O.B. WEST HARTFORD, CONNECTICUT

DUNHAM-BUSH, INC. • West Hartford, Connecticut 06110, U.S.A.

Exhibit E-5

FORM 6139B

SUPERSEDES 6139A AND 6139-2

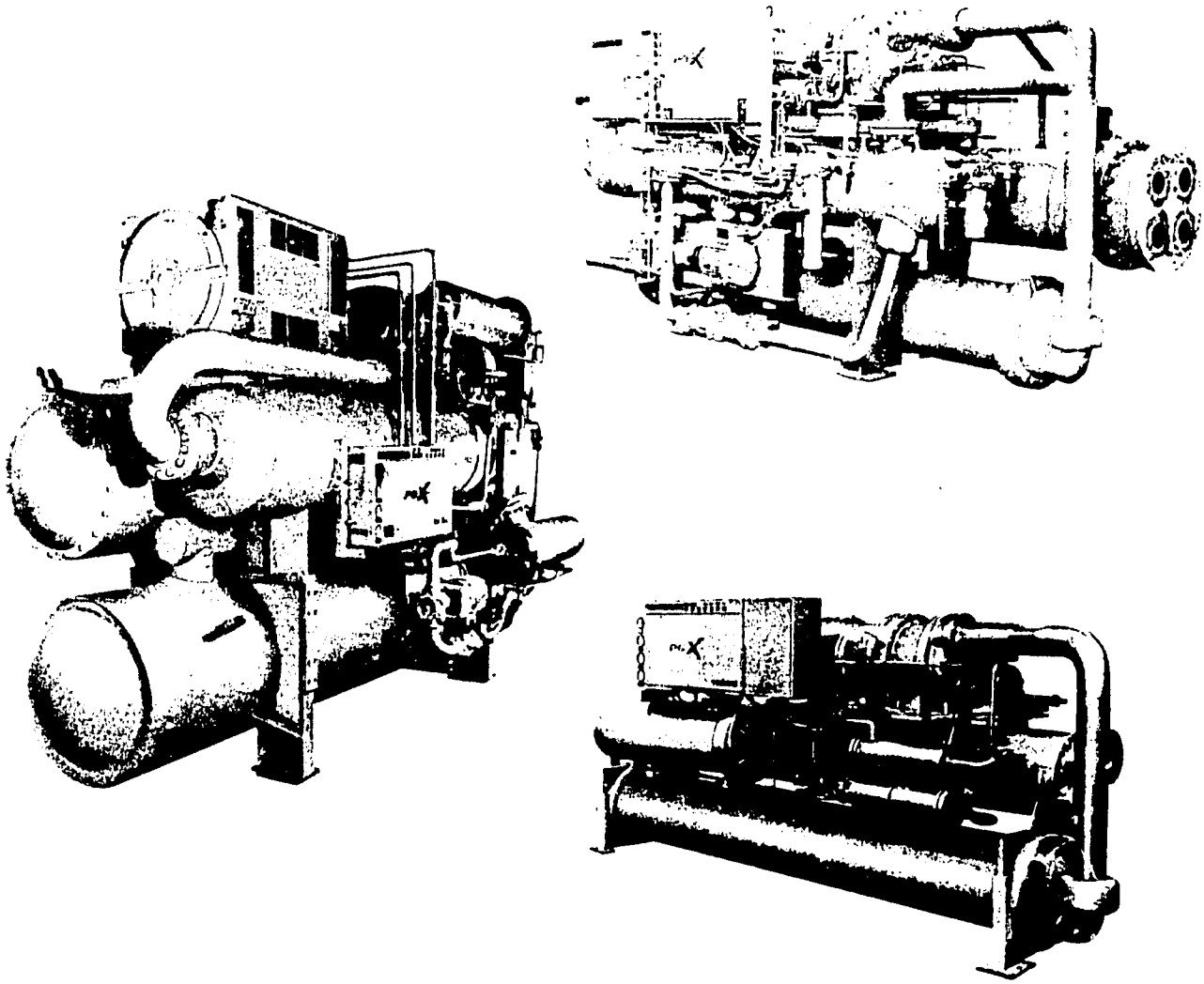

DUNHAM-BUSH

"PCX-H", "PCX-O", "PCX-OHR" & "PCX" PACKAGED CHILLERS

DIRECT EXPANSION AND FLOODED TYPE UNITS

Installation, Operation and Maintenance Instructions

588

TYPICAL UNIT COMPONENTS

PCX-O PACKAGED CHILLER (DIRECT EXPANSION)

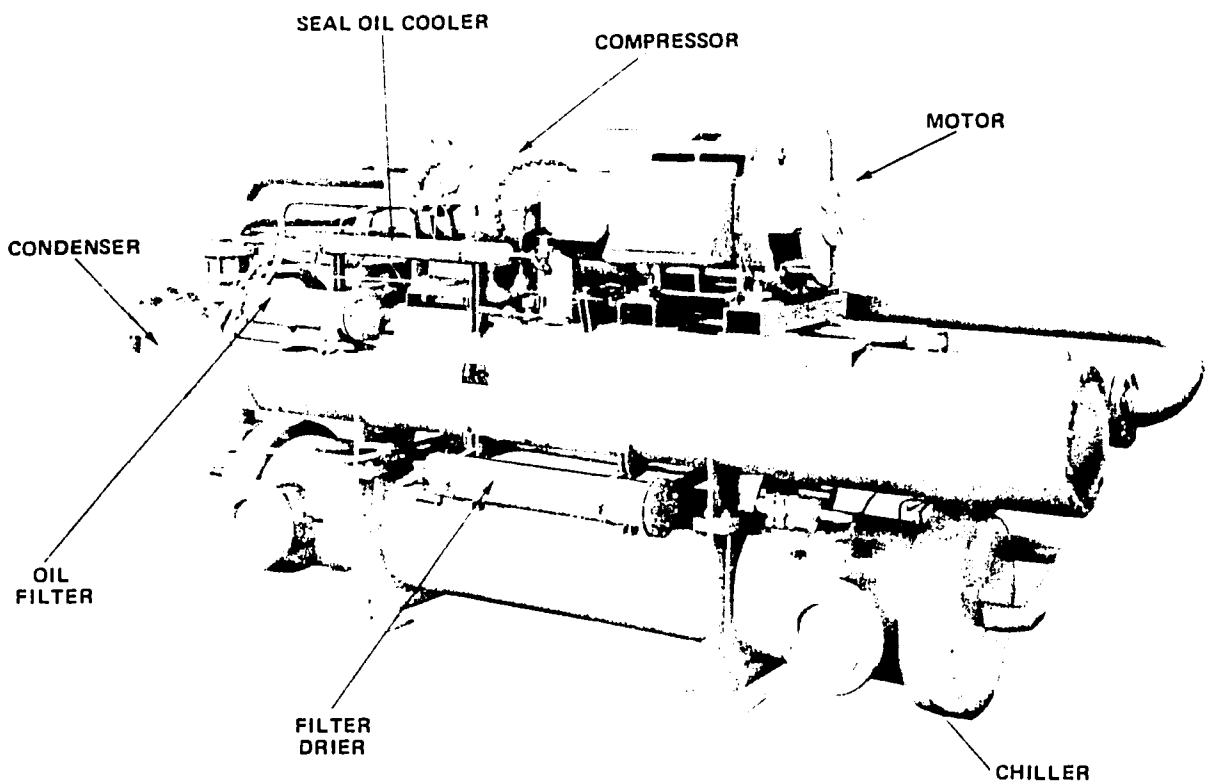

PCX-OHR HEAT RECLAIM PACKAGED CHILLER (DIRECT EXPANSION)

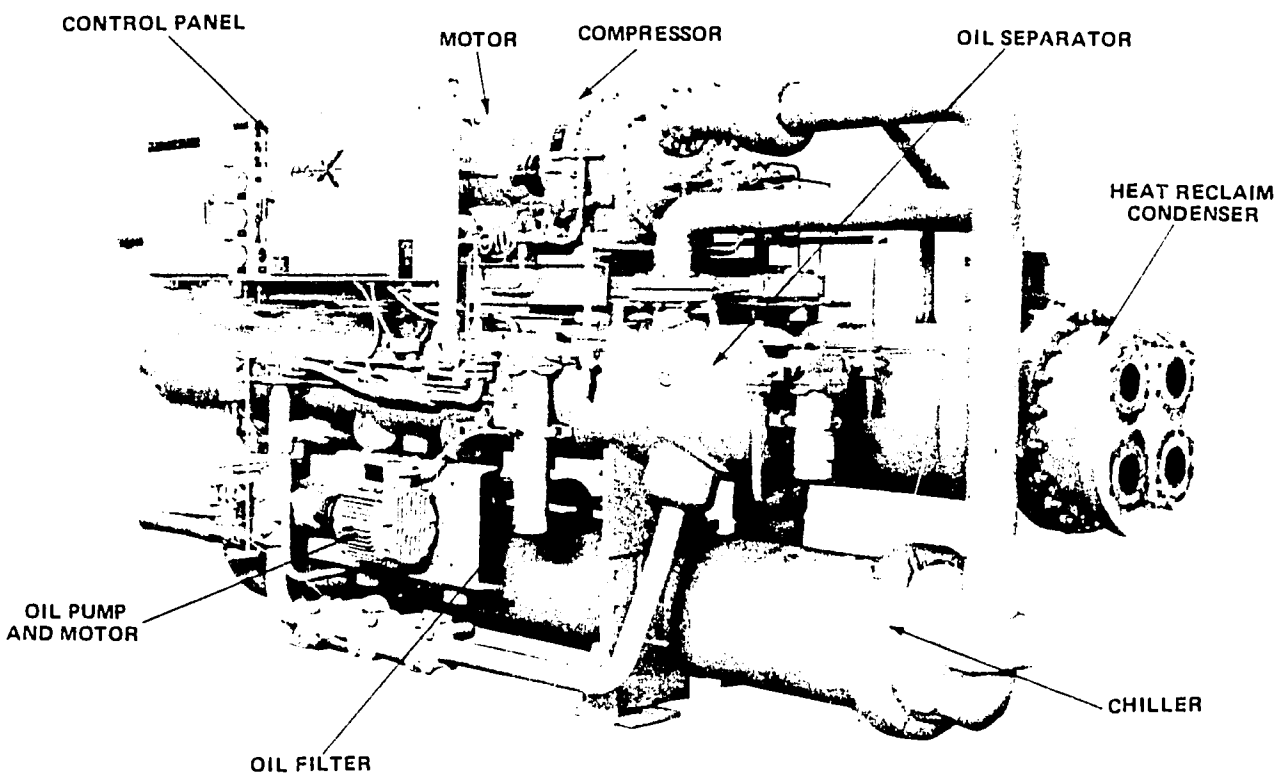

TYPICAL UNIT COMPONENTS

IPCX-O INDUSTRIAL PACKAGED CHILLER (DIRECT EXPANSION)

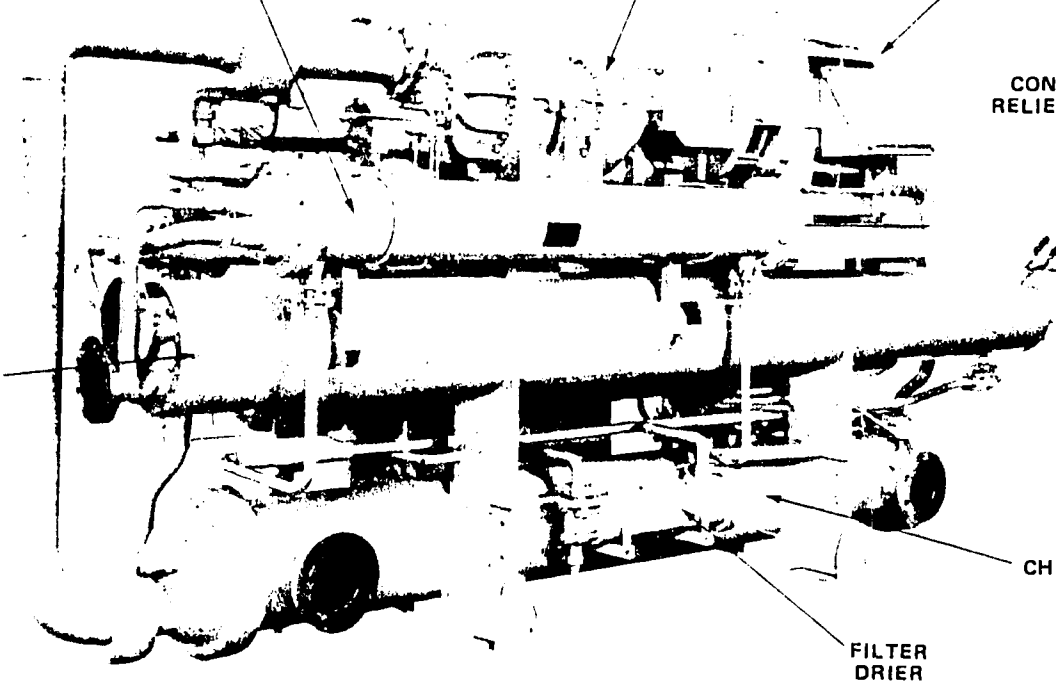

PCX-H HERMETIC PACKAGED CHILLER (DIRECT EXPANSION)

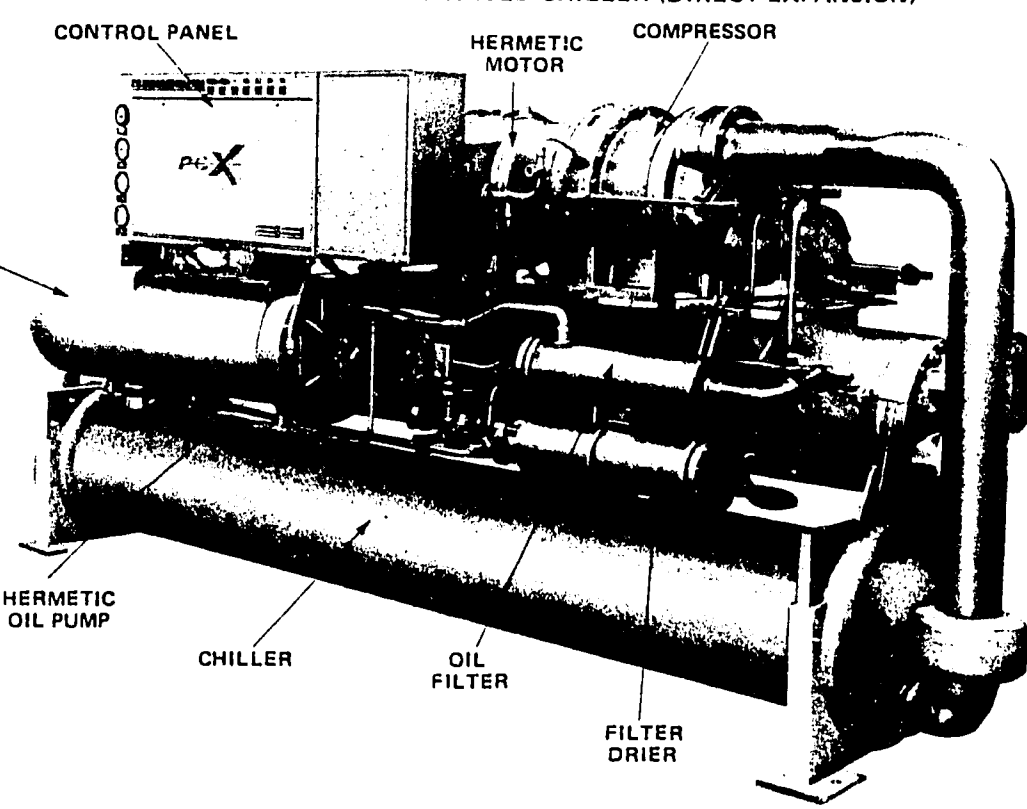

INDEX

TABLE OF CONTENTS

I. GENERAL INFORMATION — PAGE

- A. Shipping 1
- B. Receiving Inspection 1
- C. Rigging and Moving 1

II. INSTALLATION

- A. Location 2
- B. Mounting 2
- C. Leveling 2
- D. Unmounted Accessories 2
- E. External Connections 2-4
- F. Request for Start-Up Representative . . . 4

III. OPERATION

- A. General 5
- B. Systems 6
- C. Component Operation 7-12
- D. Optional Subsystem Operation 12-13
- E. Typical Piping Schematics 13-16
- F. Function of Electrical Controls 17-20
- G. Typical Electrical Schematics 21-26

IV. MAINTENANCE — PAGE

- A. General 27
- B. Periodic Maintenance 27-29
- C. Maintenance Records 29-30
- D. Oil Removal/Addition 31
- E. Transferring/Evacuating/ Charging Refrig. 32-34
- F. Component Maintenance 35-46
- G. Optional Subsystem Maintenance 47
- H. System Tests 48-51

V. TROUBLE SHOOTING

- A. Trouble Shooting Chart 52-53

VI. APPENDIX

- A. Daily Operating Log 54
- B. Monthly Operating Log 55
- C. Condenser Water Piping 56
- D. Comp.Lubricating Requirements 57
- E. Typical Information Labels 58-59

SERVICE PROCEDURES

NO.	PROCEDURE	PAGE
SP-1	*Oil Removal*	31
SP-2	*Oil Replenishment(Vacuum Method)*	31
SP-3	*Oil Replenishment(Pump Method)*	31
SP-4	*Relief Valve Access*	32
SP-5	*Service Valve Access*	32
SP-6	*Charging Valve Access*	32
SP-7	*Partial Pumpdown*	33
SP-8	*Liquid Refrig. Transfer*	33
SP-9	*Gas Refrig. Transfer from Chiller*	33
SP-10	*Liq. Refrig. Transfer from Condenser*	33
SP-11	*Gas Refrig. Transfer From Condenser*	33
SP-12	*Evacuation/Dehydration*	33
SP-13	*Initial Gas Refrig. Charging*	34
SP-14	*Liquid Refrig. Charging*	34
SP-15	*Adding to Refrig. Charge*	34
SP-16	*Compressor Coupling Alignment*	35
SP-17	*Oil Filter Replacement*	36
SP-18	*Coupling Alignment, Open Oil Pump*	37
SP-19	*Clearance Adjust., Open Oil Pump*	37
SP-20	*Maintenance, Hermetic Oil Pump*	37
SP-21	*Oil Pressure Relief Valve Adjust.*	38
SP-22	*Oil Pressure Relief Valve Assy.*	38
SP-23	*Replacement, Oil Sump Heaters*	38
SP-24	*Oil Cooler, Valve Adjustment*	40
SP-25	*Oil Cooler, Valve Flushing*	40
SP-26	*Seal Oil Cooler, Temp. Adjust.*	40
SP-27	*Condenser Cleaning, Mechanical*	41
SP-28	*Condenser Tube Plugging*	41
SP-29	*Filter Drier Replacement*	42
SP-30	*Superheat Adjustment*	43
SP-31	*Thermo-Expansion Valve Disassy.*	43
SP-32	*Disassy/Maintenance P.O.S. Valve*	44
SP-33	*Suction Filter Maintenance - In Line*	46
SP-34	*Suction Filter Maintenance - Head*	46
SP-35	*Hot Gas Bypass Adjustment*	47
SP-36	*Motor Insulation Resistance Test*	48
SP-37	*Refrigerant Leak Test*	49

DUNHAM-BUSH RESERVES THE RIGHT TO MAKE CHANGES IN SPECIFICATIONS AND DESIGN WITHOUT NOTICE.

REFERENCES *

TITLE	FORM NO.
PCX-H Hermetic Type Packaged Chillers 120 Thru 400 Tons	6039
PCX-O Open Type Packaged Chillers 120 Thru 350 Tons	6041
PCX-O Open Type Packaged Chillers 400 Thru 750 Tons	6041-2
PCX-OHR Open Type Heat Reclaim Packaged Chillers 85 Thru 330 Tons	6058
DBX Compressor Service Manual	6136
PCX Hermetic Packaged Chiller Templates	6239-1 Thru 6
PCX-O Open Type Packaged Chiller Templates	6241-1 Thru 8
Motor Starter Specifications	6236
Receiving Inspection Report	9214
Request for Authorized Start-Up Representative	9180
Daily Operating Log	9198
Monthly Operating Log	9198-1

*THESE FORMS ARE AVAILABLE AT THE LOCAL DUNHAM-BUSH SALES REPRESENTATIVE'S OFFICE.

INTRODUCTION

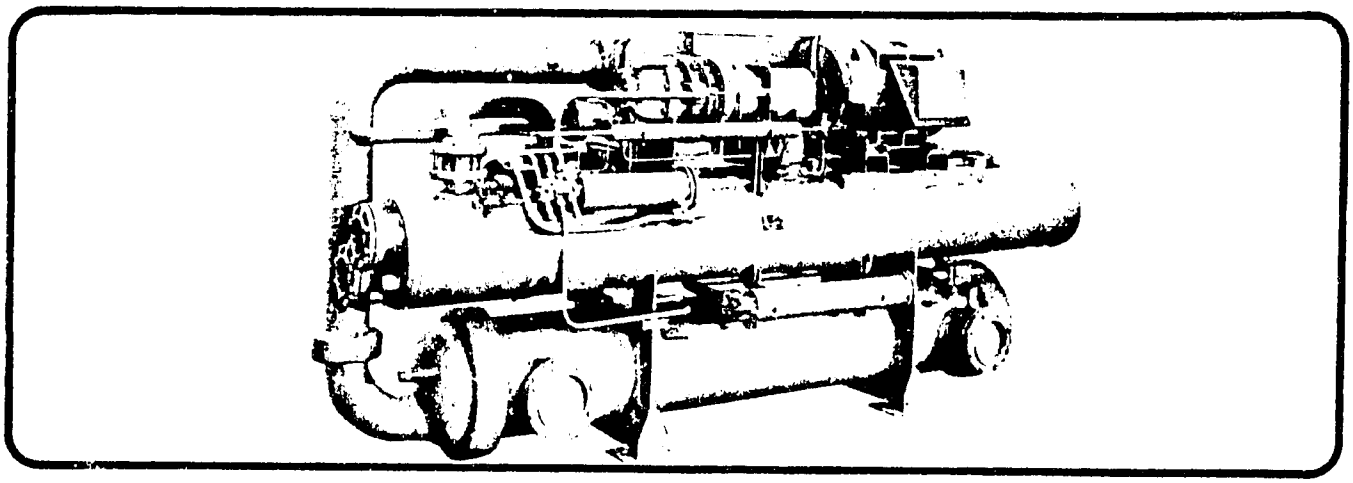

Each unit was designed to meet specific criteria and must be operated within conditions specified when ordered.

Fluorocarbon refrigerant must be handled with caution and release to the atmosphere should be minimized. Instructions for charging and retrieving refrigerant from these units can be found in the maintenance section of this manual.

These instructions and the drawings supplied with the PCX Unit must be followed carefully to insure proper installation, operation, and maintenance.

This manual is written and illustrated for a single PCX Unit installation. For instructions concerning a multiple unit installation, consult Dunham-Bush, Inc.

WARNING

Valves or connections which can cause loss of the factory installed refrigerant charge and lubricating oil charges shall not be opened under any conditions. The system shall not be dismantled or opened during installation except under the supervision of a Dunham-Bush, Inc., Authorized Service Representative.

The PCX Unit shall NOT be started following installation except under the direct supervision of a Dunham-Bush, Inc., Authorized Service Representative.

Warning tags attached to the unit should not be removed either prior to or after installation.

Compliance with the above is mandatory in order that the warranty shall not be jeopardized. All contacts with Dunham-Bush, Inc., regarding requests for information, service, or parts should be made to the nearest sales office.

DUNHAM-BUSH RESERVES THE RIGHT TO MAKE CHANGES IN SPECIFICATIONS AND DESIGN WITHOUT NOTICE.

I. GENERAL INFORMATION

A. SHIPPING

The unit is shipped with skids and lifting arms attached for ease in rigging. Refrigerant and oil systems are fully charged. Chiller and condenser water connections have covers to prevent contamination of the vessels. Check the unit nameplate to be sure the power supply meets the unit requirements. The wiring diagram number and type of refrigerant can also be found on the unit nameplate.

B. RECEIVING/INSPECTION

The unit should be inspected immediately, in the presence of the carrier's representative, for any evidence of damage during shipping. Any damage should be noted on the carrier's delivery receipt before it is signed. A damage claim should then be filed by the purchaser against the delivering carrier as all shipments are made at the purchaser's risk. The receiving inspection report (Form 9214), sent with the installation instructions, should also be filled out at this time and forwarded to the Dunham-Bush, Inc., National Service Department, West Hartford, CT. 06110.

C. RIGGING AND MOVING

Riggers and installers must use every precaution to prevent damage while moving the unit from the point of shipment to its permanent location. Pushing, pulling or climbing on any of the unit components or piping can easily create damage that will result in costly repairs of leaks and malfunctioning components. The only places it is safe to apply hoisting, jacking, pushing, or pulling forces are to shipping skids and lifting arms. Cables are to be attached only to the lifting arms, spreaders must be used with the lifting cables to prevent damage to the unit.

Skidding may be done directly on the shipping skios or on properly spaced rollers under the skids. Pushing and pulling should only be directed against the skids and lifting arms.

II. INSTALLATION

A. LOCATION

The location of the unit may be any foundation or deck that is generally level within 1/8 of an inch and structurally capable of supporting the weight of the unit. A cleared area should be left around the unit to aid in operation, maintenance and removal of components. See references (packaged chiller templates) to obtain minimum clearance requirements.

B. MOUNTING

Resilient pads are provided for installation under the mounting legs. For critical installations, Dunham-Bush, Inc., can provide whatever type of vibration isolator the customer specifies. They must be installed and adjusted in accordance with the isolator manufacturer's instructions. The unit may be cemented or lagged to the foundation if desired.

C. LEVELING

When the unit is at its final location, it should be jacked or hoisted, by the lifting arms, the shipping skids removed and the unit let down on the isolator equipment supplied (felt pads or vibration isolators). It should then be checked for level longitudinally at the top center of the condenser shell and laterally across the compressor motor feet. Steel shims should be installed under the isolator pads, if necessary to level the unit.

D. UNMOUNTED ACCESSORIES

A chiller flow switch, which is shipped in a separate container accompanying the unit, must be installed in the external chilled water outlet piping. It must be located in a horizontal section on the pipe where there is at least five (5) pipe diameters on both sides of the flow switch before any other connections, as indicated in Fig. 1. The flow switch paddle must be adjusted to the size of pipe in which the paddle is installed, and the switch set to trip at approximately 50% of the design flow. Consult the wiring diagram accompanying the unit for the electrical connections to interlock the flow switch with the control panel.

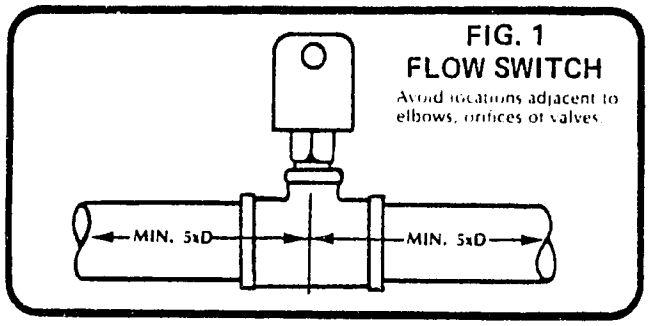

FIG. 1
FLOW SWITCH
Avoid locations adjacent to elbows, orifices or valves.

E. EXTERNAL CONNECTIONS

1. Water Connection

After the unit has been leveled, the external water piping to the chiller and condenser may be made up. Air vent valves should be installed at all high points to bleed the system of entrapped air. Drain valves or plugs should be installed at low points to gravity drain the system. The unit drain plugs for the chiller, condenser and oil cooler (if equipped) must be installed prior to filling the system. Insulation should be installed on all external piping to prevent sweating and if the chiller (vessel) and associated piping was not equipped with the optional factory insulation, it too must be insulated.

All external plumbing should have manual shut-off valves installed near the unit for ease in servicing and maintenance. Strainers should also be mounted in the piping before the unit to prevent dirt and other contaminants from entering and damaging the unit and its satellite equipment.

The external plumbing must be carefully located and adequately supported by pipe hangers to prevent twisting or bending stresses on the unit when the flanges or grooved pipe connections are bolted. It is recommended that flanged elbows be used at the connection to the condenser so that the external piping will not interfere with servicing of the condenser tubes. Flexible connections on water lines throughout the machinery room are recommended for chiller and condenser piping, where sound or vibration transmission may be a problem.

Following make up of the external plumbing, a check should be made for piping stresses at the PCX unit, as follows: Remove condenser and chiller connecting bolts. If any bolts are misaligned, adjust external piping or hangers to properly align the connections. If it is necessary to reshape and anneal the external piping, the inside of the piping must be cleaned of the resulting scale before reassembly. The piping should then be thoroughly flushed to remove all foreign material, connected to the unit, filled, vented and tested for leaks.

PCX units are designed for a fixed evaporator water flow, and means should be employed to assure a relatively constant flow at all loads.

593

E. EXTERNAL CONNECTIONS CONTINUED

2. Water Treatment

Most industrial water supplies contain dissolved or suspended materials which cause scale formation, corrosion, and propagate slime, algae, etc. It is strongly recommended that a water treatment specialist be consulted for additive systems to counteract or prevent the damages caused by these impurities.

Cooling towers and evaporative water coolers experience a constant loss of water due to evaporation. Since evaporation is a distillation process, an increasing concentration of suspended and dissolved impurities occurs. This increase of impurities can be greatly reduced by a bleed-off system which will constantly bleed off the contaminated water and replace it with fresh water through the sump float valve.

Chemical water treatment in addition to the bleed-off system will probably be necessary. The correct rate of water bleed-off and the proper chemical treatment should be determined by a specialist familiar with the local water characteristics. A daily check and periodic inspections should be made to be sure the correct bleed-off rate and chemical treatment is maintained. Do not underestimate the importance of daily logged readings of condensing pressure, water temperatures, oil cooler water (when supplied) and oil temperatures in determining the condition of the heat transfer surfaces, and the effectiveness of the water treatment.

NOTE: Consult manufacturer for information concerning design, installation and operation of the cooling tower or evaporative water cooler.

WARNING: Dunham-Bush, Inc., will not be liable for any damage or failure resulting from the physical or chemical properties of the condenser water used in this equipment.

NOTE: Local codes may require the relief valve piping piped away from the unit.

3. Electrical Connections

The unit is completely wired at the factory prior to delivery. The connections which must be made by the installer are listed below. Each circuit must have adequate control and protection devices incorporated in it in accordance with the National Electric Code and/or other applicable codes in the area in which the unit is installed. The voltage, frequency and phase must be in accordance with that shown on the unit nameplate, and within 1% voltage imbalance. Flexible conduit should be used where vibration may be a problem. All wiring must be in accordance with the wiring diagram furnished with the unit, the National Electrical Code and any local codes that may apply. Any deviations from the above requirements must have the prior approval of Dunham-Bush, Inc. Customer supplied starters for the compressor motor must be in compliance with the latest revision of Dunham-Bush, Inc., Engineering Specification No. ELC-ES-9 which is available from the local Dunham-Bush, Inc., sales representative's office under Form No. 6236 or as individually approved in writing by Dunham-Bush, Inc. A starter interconnection wiring diagram can be found in the Operation Section of this manual.

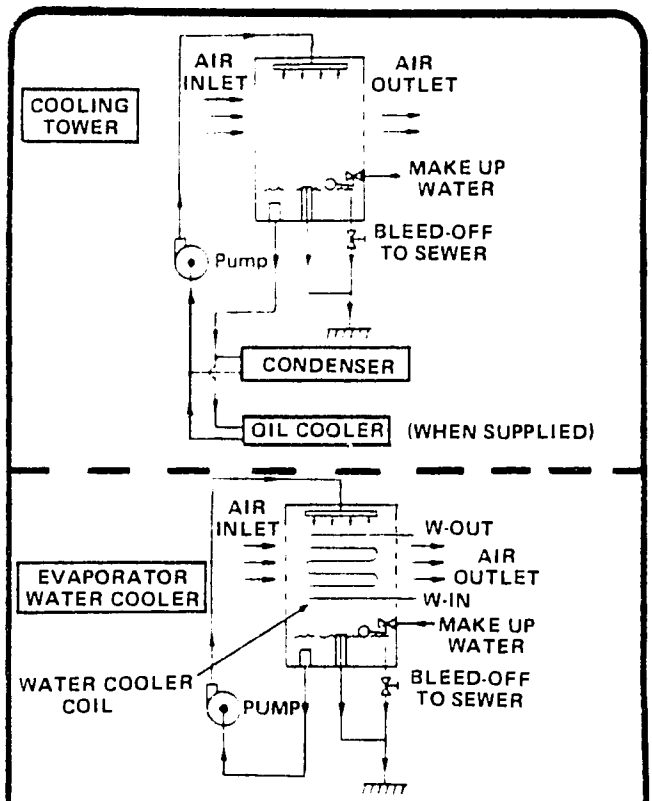

FIG. 2 TYPICAL BLEED-OFF SYSTEMS

The following external wiring is to be provided by the installer:

a. Power supply to compressor motor starter with circuit protection, and from starter to compressor motor.

b. Power supply to oil pump motor contactor or starter with circuit protection.

c. Chilled water pump auxiliary contacts to control panel.

d. Condenser water pump starter control circuit to control panel.

e. Compressor motor starter control circuit to control panel.

f. Compressor motor overload circuit to control panel.

g. Load limiter wiring from starter to control panel.

h. A properly sized control transformer or 120V/60 HZ./1PH power supply to control panel, with circuit protection.

i. Flow Switch to control panel.

4a. Mounting and Leveling

☐ Erected on foundation . . . in accordance with construction and electrical drawings supplied to the customer and requirements of this manual.

☐ Spring isolators or pads, installed, and the unit leveled . . . in accordance with isolator manufacturer's instructions and the requirements of this manual.

II. INSTALLATION

E. EXTERNAL CONNECTIONS CONTINUED

4b. Water Piping

- ☐ Condenser cooling water piping installed between condenser, pumps and cooling tower or well . . . as specified in this manual.
- ☐ Chilled water piping installed between chiller, pumps, and terminal equipment . . . as specified in this manual.
- ☐ Make-up and fill lines installed to cooling tower and chilled water system . . . and chemical treatment and bleed-off systems as needed.
- ☐ Thermometers,air vents, drain plugs and pressure gauges installed in chilled and condenser water inlet and outlet lines.
- ☐ Flow switch installed in outlet chilled water line and adjusted to a minimum of 50% flow.
- ☐ All water piping checked for strain . . . as specified in this manual.
- ☐ Water piping leak tested, flushed and vented, water strainers checked after flushing to be certain they are not clogged.
- ☐ Chiller and condenser water flow available from supply in sufficient quantity to meet unit design requirements. . . . and with adequate water treatment.

4c. Electrical Wiring

- ☐ Power supply available . . . with circuit protection and in accordance with the requirements on the unit nameplate and this manual.
- ☐ Wiring completed from power supply through circuit protection in accordance with the drawing supplied and the requirements of this manual.
- ☐ Wiring completed from power supply to circuit protection for oil pump motor in accordance with the wiring diagram and the requirements of this manual.
- ☐ Wiring completed from power supply through circuit protection to 115V control circuit in unit control panel (or through 115V transformer to control circuit) . . . in accordance with the drawing supplied and requirements of this manual.
- ☐ Wiring from power supply through circuit protection to satellite equipment and interlocks wired to control panel in accordance with drawing supplied and requirements of this manual.
- ☐ Phasing correct for direction of rotation of all motors except compressor and oil pump motors . . . phasing of compressor and oil pump motor will be checked by Dunham-Bush, Inc. start-up representative.

4d. Conditions Required for Start-Up

- ☐ Load must be available for operation and testing . . . a refrigeration load adequate to cause normal operation of the unit MUST BE AVAILABLE.
- ☐ Competent representatives of the Allied Trades (electrical contractor, steam fitters, controls contractor, etc.) involved in the installation of this chiller must be at job site to correlate their portion of the work in starting, testing, and balancing this chiller.

F. REQUEST FOR START-UP REPRESENTATIVE

After the installation has been completed and checked, Form 9180 must be filled out and sent to the National Service Department of Dunham-Bush, Inc. This Form is a request for the services of a Dunham-Bush, Inc. authorized start-up representative to perform the initial start-up of the Dunham-Bush chiller. The purchaser will have competent service, and operating personnel in attendance to assist in the work involved, and also to be trained in the service and maintenance of this chiller. (During the warranty period the manufacturer is responsible for parts only upon proof of defective workmanship or manufacture).

Following receipt of this signed form, a representative will be sent to the customer. He will inspect the installation to determine whether it meets Dunham-Bush, Inc. requirements, perform the initial start-up of the installation to determine whether it is in satisfactory operating condition, and instruct the specified customer personnel in its operation and maintenance for the length of time specified in the purchase contract.

NOTE:

Sump oil heaters should be energized a minimum of 24 hours prior to arrival of start-up representative. On hermetic compressors, the motor housing heaters should also be energized a minimum of 24 hours and the oil sump temperature must be at a minimum of 100°F (38°C) prior to arrival of start-up representative. This will insure that the oil is warm enough to vaporize any refrigerant in the oil and is in the normal operating temperature range.

III. OPERATION

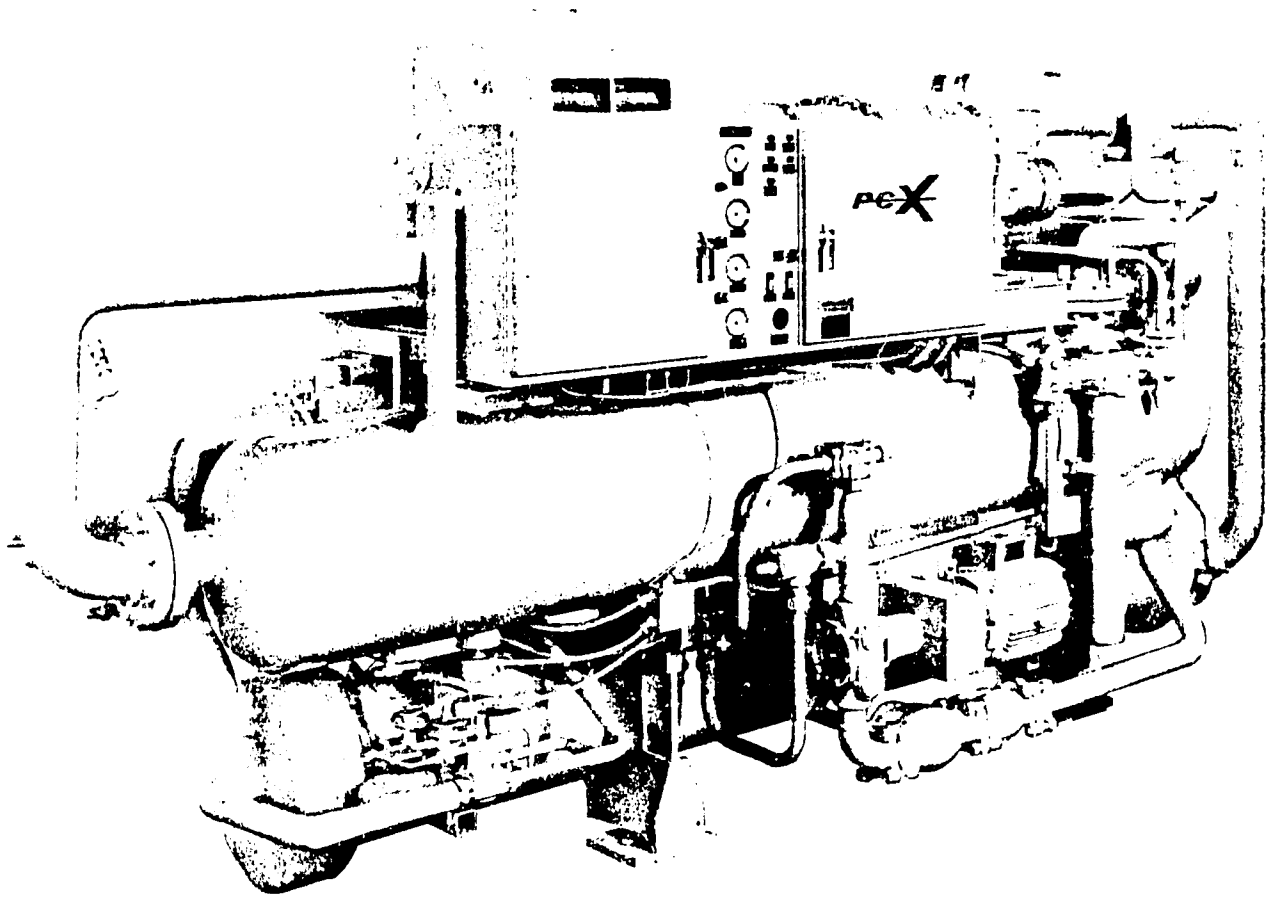

IPCX-O DIRECT DRIVE PACKAGED CHILLER

A. GENERAL

WARNING: The compressor and oil pump are NOT to be started initially except under the direct supervision of an Authorized Dunham-Bush, Inc. Start-Up Representative. Be sure that oil sump heaters and motor housing heaters (if the unit is hermetic) are turned on for a minimum of twenty-four hours prior to initial start-up. Couplings and motors have been aligned with the compressor at the factory. During shipment they may become misaligned. Alignment and motor pinning at initial start-up must be done by a Dunham-Bush, Inc. Start-Up Representative.

While this unit is greatly simplified and incorporates features to protect it against damage, it does represent a considerable investment and deserves the attention and care normally given to any fine piece of equipment. Reliable and economical operation will be achieved if the instructions in this manual are followed.

CAUTION: Operate this equipment in accordance with the instructions of this manual. DO NOT alter control settings to other than those specified on the wiring diagram accompanying the unit.

This equipment has been tested prior to shipment and found satisfactory for the conditions under which it was sold. Operation in excess of these conditions will subject this equipment to stresses for which it was not designed. Failure to heed this warning may result in injury to operating personnel and may jeopardize the warranty under which the equipment was sold.

596

III. OPERATION

B. SYSTEMS

1. REFRIGERANT SYSTEM

The PCX packaged chiller may have either a direct expansion or flooded chiller depending on the capacity of the unit. A simple flow diagram as depicted in Fig. 3 and 4 indicates the principle parts of a basic refrigeration

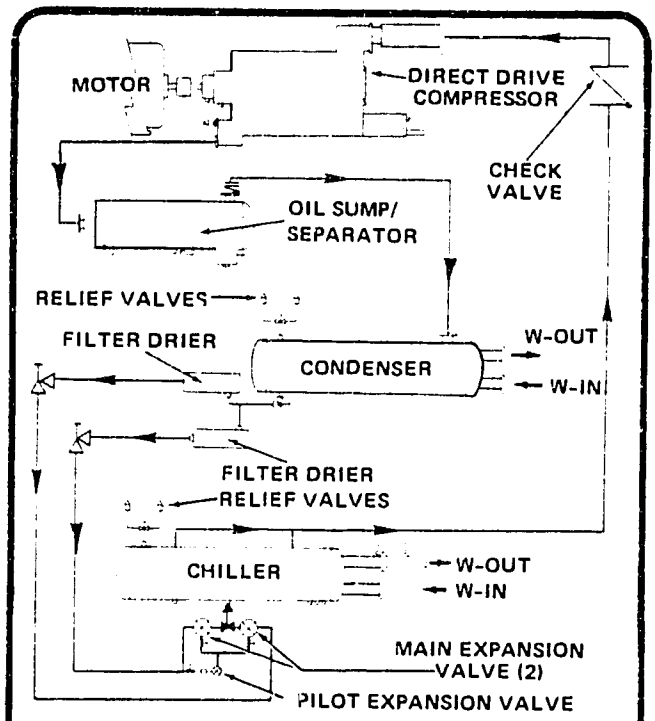

FIG. 3 TYPICAL FLOODED PCX-O

cycle. The compressor takes the refrigerant gas at low density and compresses it to a higher density. The temperature of the refrigerant gas is also increased. The dense refrigerant gas flows to the condenser where heat is removed, causing a change in the state of the refrigerant from a gas to a liquid. The refrigerant in a liquid state then flows through the filter/drier, through an expansion valve which meters the refrigerant into the evaporator chiller. There it changes its state back to a gas as it absorbs heat and evaporates. It is during this change of state that the refrigerant will extract heat from the medium being cooled. This low density cool gas then flows to the compressor where the cycle is repeated.

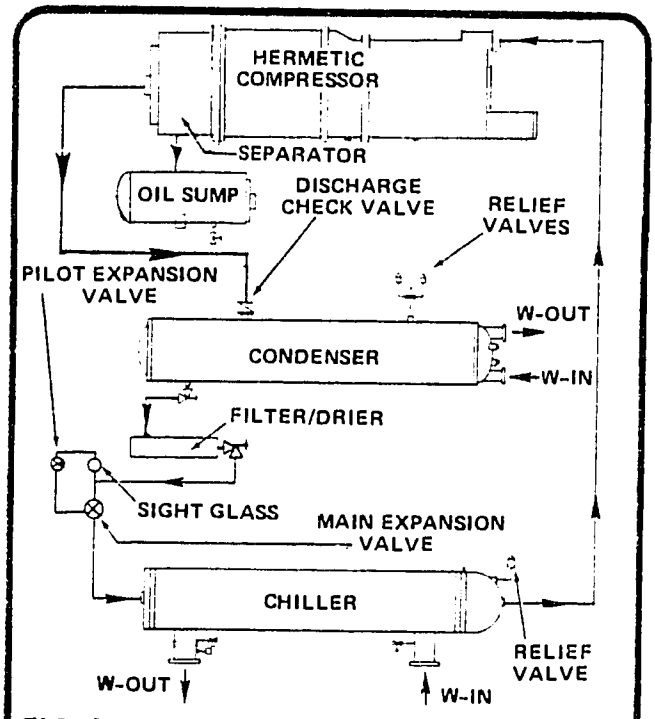

FIG. 4 TYPICAL DIRECT EXPANSION PCX-H

Operation of specific components within the refrigerant system may be found under System Components Section.

2. WATER SYSTEMS

The condenser water system on a PCX unit is an open end system and the water in the system is used to condense hot refrigerant gas into a liquid. Water is pumped through the tubes of the condenser where it picks up heat condensing the refrigerant. It then flows to a water tower, evaporative water cooler, or other cooling service, where the heat is dissipated to the atmosphere. Cooled water is picked up here and is pumped to the condenser to absorb more heat from the refrigerant.

Some units have water cooled oil coolers. The water used to cool the oil is either diverted from the input of the condenser to the oil cooler or is supplied from an exterior source. A thermally actuated valve monitors the leaving oil temperature and modulates the water flow through the cooler.

The condenser for heat recovery units is constructed with two entirely separate water circuits. Hot gas from the compressor is discharged to the condenser where the heat is absorbed by either one of the water circuits or both simultaneously, depending on the building requirements. The heat reclaim condenser features the split system to prevent contamination of the heating circuit, associated piping, and heating coils from the cooling tower water which may absorb dirt, chemicals or corrosives.

The chilled water system is a closed system and the flow pattern varies for a flooded system versus a direct expansion system. Both systems use shell and tube heat exchangers, but in a flooded system the water is pumped through the tubes while a direct expansion system, water is pumped through the shell. As the chilled water leaves from either of these systems it is monitored by electronic arrangement which controls the operation of the unit. The chilled water then flows to the cooling coils where it picks up heat from the space or item being cooled. The water is then circulated back to the pump and chiller.

Operation of specific components within the refrigerant system may be found under the Component Operation Section.

3. LUBRICATING SYSTEM

The oil in a PCX system is used to lubricate the compressor and is additionally used to dissipate heat generated within the compressor, provide a seal between the male and female rotors during compression of the refrigerant, as a hydraulic medium for capacity control, and to provide quite operation.

There are a number of variations of lubricating systems. The choice of each system is dependent upon the type of unit and its purpose. Operation of these systems can be found in the Component Operation Section.

III. OPERATION

C. COMPONENT OPERATION

1. COMPRESSOR/MOTOR ASSEMBLY

The PCX-H compressor motor is hermetically sealed and is directly connected at the compressor outlet so that both the compressed refrigerant and lubricating oil cool the motor windings. Temperature sensors are embedded in the motor windings to monitor the temperature for the motor protection system. The PCX-O compressor motor is air cooled and is connected to the compressor by a flexible coupling.

The compressor used on the Dunham-Bush, Inc., packaged chiller is a positive displacement, helical-axial flow compressor designed for use with high pressure refrigerants. Unlike centrifugal compressors, no purge system is needed.

For clarity reasons, the following account of the PCX compressor operation will be limited to one lobe on the male rotor and one interlobe space of the female rotor. In actual operation, as the rotors revolve, all of the male lobes and female interlobe spaces interact similarly with resulting uniform, non-pulsating gas flow.

1a. Suction Phase

As a lobe of the male rotor begins to unmesh from an interlobe space in the female rotor, a void is created and gas is drawn in through the inlet port - Fig. 5 - as the rotors continue to turn the interlobe space increases in size - Fig. 6 - and gas flows continuously

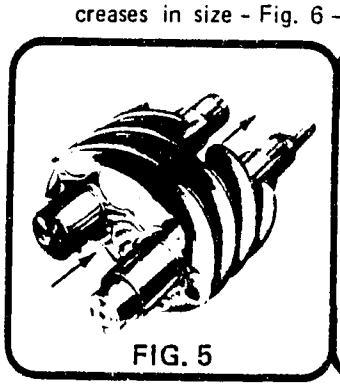

FIG. 5

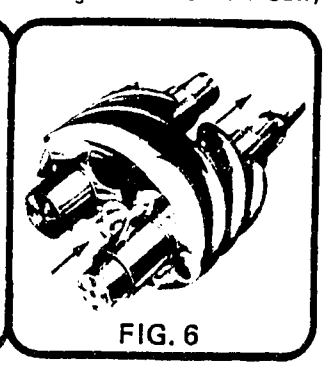

FIG. 6

into the compressor. Just prior to the point at which the interlobe space leaves the inlet port, the entire length of the interlobe space is completely filled with drawn in gas - Fig. 7.

1b. Compression Phase

As rotation continues, the gas in the interlobe space is carried circumferentially around the compressor housing. Further rotation meshes a male lobe with the interlobe space on the suction end and squeezes (compresses) the gas in the direction of the discharge port. Thus the occupied volume of the trapped gas within

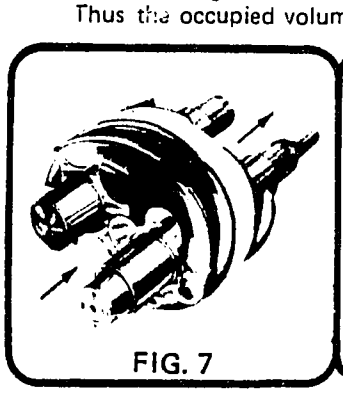

FIG. 7

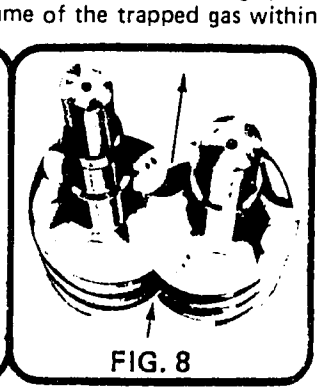

FIG. 8

the interlobe space is decreased and the gas pressure consequently increased.

1c. Discharge Phase

At a point determined by the designed "built-in" compressor ratio, the discharge port is uncovered and the compressed gas is discharged by further meshing of the lobe and interlobe space - Fig. 8. While the meshing point of a pair of lobes is moving axially, the next charge is being drawn into the unmeshed portion and the working phases of the compressor cycle are repeated.

1d. Capacity Control

Compressor vapor displacement is controlled to balance the flow rate of liquid refrigerant entering the evaporator with the changing cooling demand.

The capacity control valve is located in the rotor housing as shown in Fig. 9 and 10. The movement

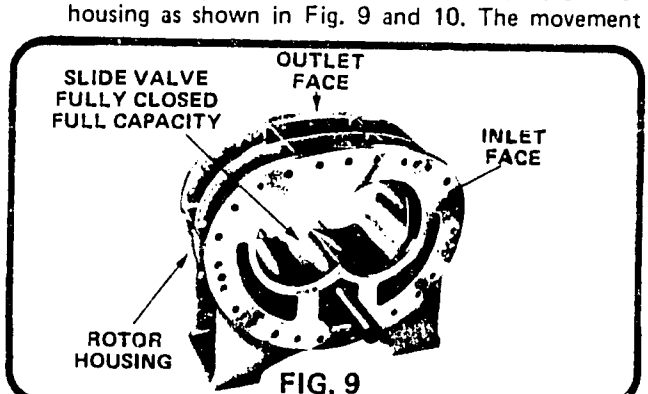

FIG. 9

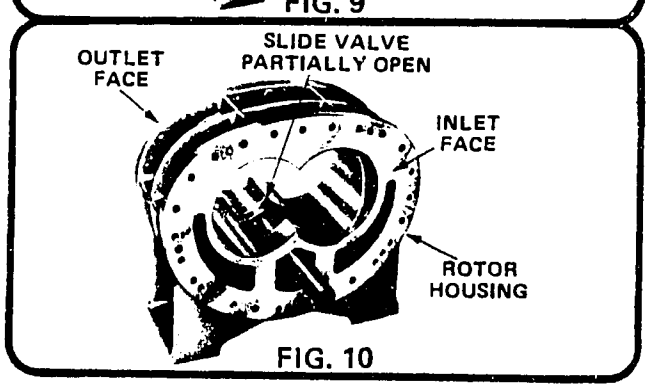

FIG. 10

of this valve along the axes of the rotors is programmed by a solid state, temperature initiated, hydraulically actuated control arrangement. When the compressor is fully loaded the slide valve is in the closed position against the valve stop as shown in Fig. 9, and all gas flows through the rotor housing as described previously. When the compressor starts to unload, as shown in Fig. 10, the compressor slide valve will move away from the valve stop. The movement of the slide valve creates an opening in the bottom of the rotor housing through which suction gas can pass back to the inlet port. As no significant amount of work has been done on the returned suction gas, no appreciable losses have been incurred. Reduced capacity is obtained from the gas remaining in the interlobe, which is compressed in the ordinary manner. In principle, as the opening in the rotor housing is enlarged the compressor displacement is reduced. Optional capacity control system information can be found under Optional Sub-System Operation.

CAPACITY CONTROL

1e. The temperature load controller (TLC) supplies power to the load solenoid valve (LSV) and unload solenoid valve (USV) to control the position of the compressor slide valve piston. Control is achieved electronically by a monitoring leaving chilled water temperature. The TLC will always act to meet a specific load demand and stabilize unit operation.

LEGEND: LTV - Load Throttling Valve; UTV - Unload Throttling Valve; SOV - Shut Off Valve; FUSV - Fast Unload Solenoid Valve; USV - Unload Solenoid Valve; LSV - Load Solenoid Valve; ■ Refrigerant Gas; □ Refrigerant Oil

COMPRESSOR LOADING

- **LOADING**

When energized, the load solenoid valve (LSV) opens and discharge pressure pushes the slide valve towards load, forcing oil out of the cylinder into the suction housing. Piston speed is controlled by an adjustable restrictor valve located in the oil line.

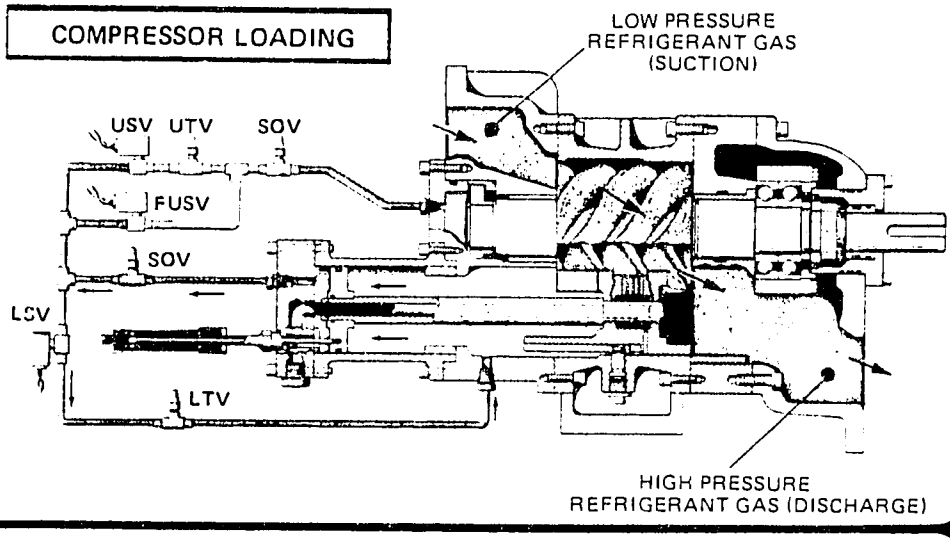

COMPRESSOR UNLOADING

- **UNLOADING**

When energized, the unload solenoid valve (USV) opens. The combination of discharge plus oil pressure on the slide valve piston will move the slide valve toward the unload position. Piston speed is controlled by an adjustable restrictor valve located in the oil line.

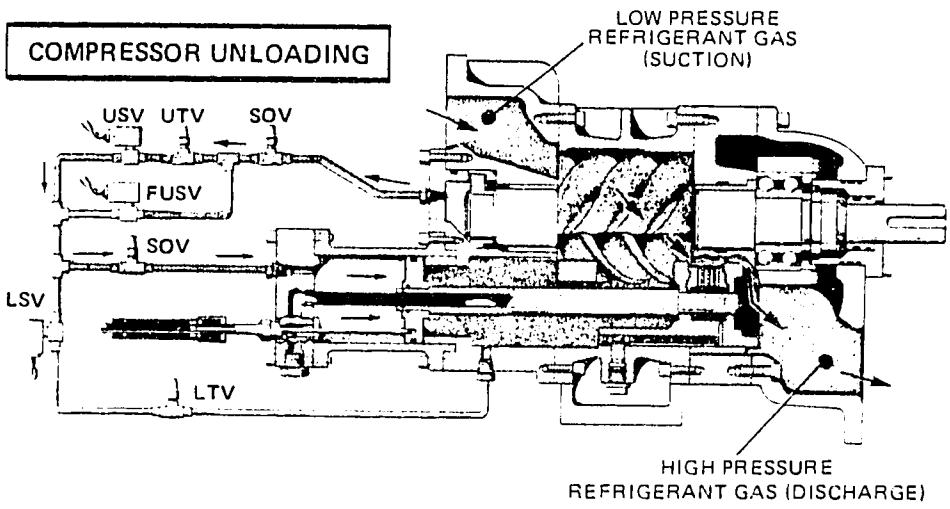

COMPRESSOR PART LOAD

- **PART LOAD**

The unit will remain in the part load position as long as the leaving chilled water temperature remains at the desired temperature. Both load and unload solenoid valves will be closed and the piston will be stationary at the part load position.

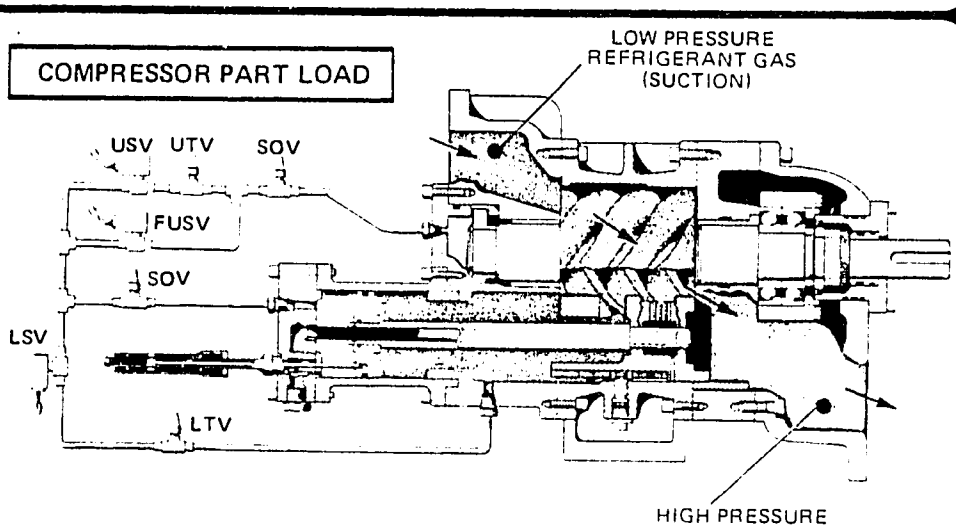

2. LUBRICATION SYSTEM OPERATION

2a. Oil Separation and Collection

Prior to entering the condenser, the discharge refrigerant vapor and the oil are mechanically separated. The oil/vapor mixture is discharged from the compressor to a separator, or combination sump/separator (depending upon the unit model). A liquid injection arrangement controlling discharge temperature at the compressor insures the proper conditions necessary for efficient oil separation.

- **Hermetic Units** - Units featuring a hermetic compressor have an oil separator mounted at the compressor discharge and the oil drains into a separate sump. The separator is constructed with a knitted mesh wire wound on a perforated metal mandrel. The oil droplets collect on the wire mesh and are drained into the oil sump. The discharge refrigerant vapor is piped from the separator directly to the condenser.
- **Open Drive Units** - Units featuring a direct drive compressor incorporate a combination oil/sump separator in a single vessel. The upper portion of the shell contains mesh beds which serve to remove the oil from the discharge vapor. The bottom portion of the shell acts as a sump for the collected oil. The discharge refrigerant vapor is piped from the upper portion of the sump/separator to the condenser.
- **Oil Sump Heaters** - Electric resistance heaters are located in the lower portion of the sump vessel and serve to vaporize excess refrigerant that may have diluted the oil during shut-down, and heat the oil to a suitable temperature for start-up. Normally the heaters must be energized a minimum of 24 hours and the oil sump temperature must be at a minimum of 100°F (38°C) prior to start-up of the unit.
- **Oil Sump Sight Glasses** - Sight glasses are provided in the sump vessel to monitor the oil level. When the unit is shut-down and the oil is at design discharge temperature, the normal oil level is 1/2 to 1/3 visible in the (top) sight glass.

2b. Oil Pumps

A gear type oil pump is used to provide oil at sufficient pressure to lubricate the compressor and actuate the capacity control slide valve. The pump may be either hermetic or open drive, depending on the unit application.

- **Hermetic Oil Pump** - The hermetic oil pump and motor are located within the oil sump vessel utilizing the oil to cool the motor windings. Thermal switches imbedded in the motor windings are interlocked with the control panel and serve to protect the motor from overheating. To avoid circulation of solid contaminants, a 100 mesh strainer is located at the pump suction. A pressure relief valve located on the discharge side of the pump inside the vessel, is factory set and sealed for 53 psid (365 kPa) relief pressure.
- **Open Drive Oil Pump** - Located exterior of the oil sump, the open pump is coupled to a motor. To avoid circulation of solid contaminants, a 100 mesh strainer is located at the pump suction. Service valves and a check valve are provided for ease of maintenance.

2c. Oil Systems

There are two basic types of oil system piping arrangements used on packaged chillers that serve the compressor's lubrication and hydraulic purposes; a partially pumped system and a fully pumped system. Typical lubrication systems are shown in Fig. 11 thru 13.

NOTE: Net oil pressure is the oil pressure supplied to the bearings minus the discharge pressure at the compressor.

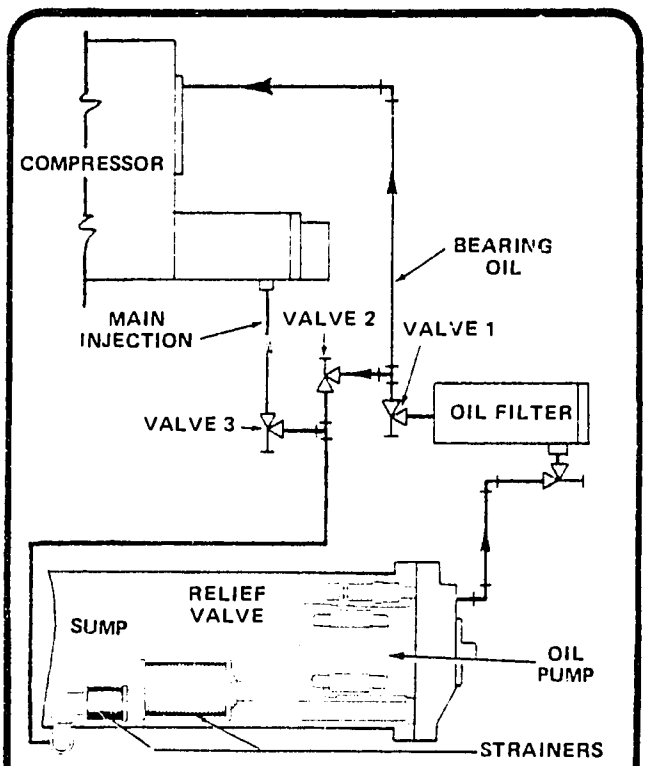

FIG. 11 - PARTIALLY PUMPED WITH HERMETIC OIL PUMP

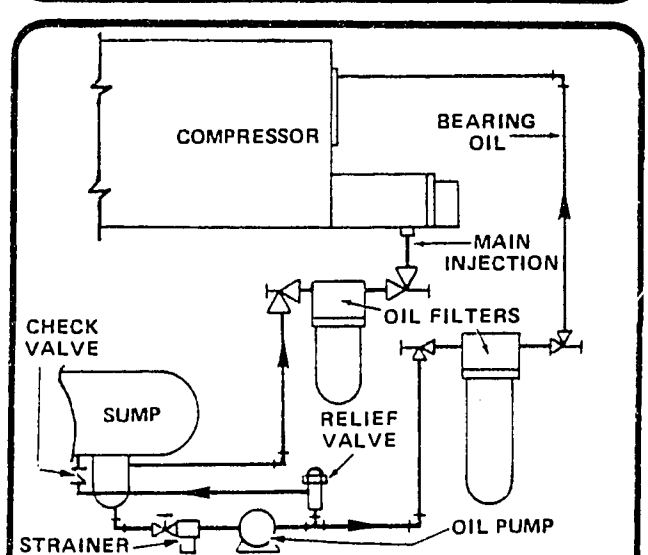

FIG. 12 - PARTIALLY PUMPED OIL SYSTEM WITH OPEN OIL PUMP

- **Partially Pumped Oil System** - In a partially pumped lubrication system, strained oil is pumped through an oil filter to a three valve manifold. Valve 'one' and valve 'three' as shown in Fig. 11 are strictly service valves and remain fully open. Valve #2 is used to adjust the required net oil pressure.

- **Fully Pumped Oil System** - Both injection and bearing oil are pumped in the fully pumped oil system. Net oil pressure is maintained by a regulating valve mounted at the oil pump discharge. The regulating valve may be adjusted to obtain the required net oil pressure.

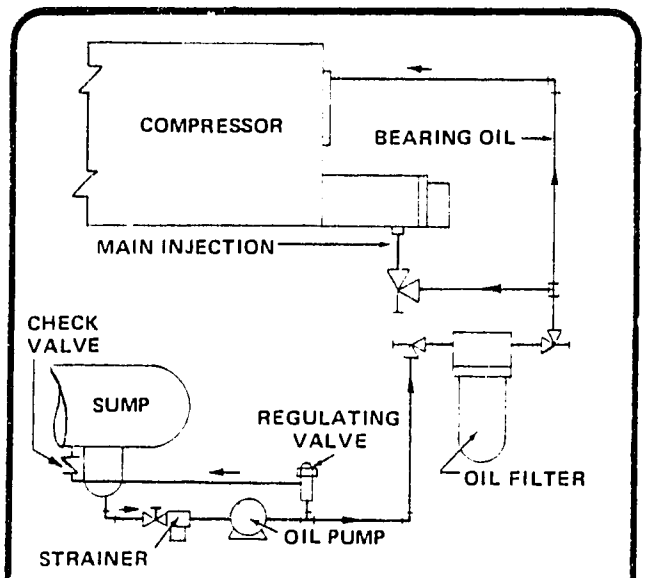

FIG. 13 FULLY PUMPED OIL SYSTEM

2d. Oil Filters

The filters used in the oil system consist of a shell with replaceable 10 micron pleated paper element(s). The normal operating pressure drop across the filter is 1 thru 2 PSID (6.9 thru 13.8 kPa) with a new element. The maximum allowable pressure drop across the filter is 6 PSID (41.4 kPa). Service valves are provided for easy maintenance.

2e. Evaporator Oil Return System (Flooded Chiller, Low Temperature Direct Expansion Chiller)

Powered by discharge gas, a jet pump eductor is used to remove residual oil that accumulates in the chiller. This device is used on all flooded chillers, and direct expansion chillers with low suction temperature applications.

- **Flooded Chiller** - The flooded chiller has 4 to 5 valve taps in the chiller shell which are connected to the suction of the jet pump. The bottom tap should be opened partially for pulldown and overload conditions, when the liquid level is depressed. For high chiller liquid levels, when the load is low, the top tap, generally, should be closed unless field conditions require otherwise. The remaining valve taps permit oil pick-up as the level varies. These taps should be open somewhat, and the one that is closest to the normal liquid level, when operating at the design condenser leaving water temperature, should be wide open.

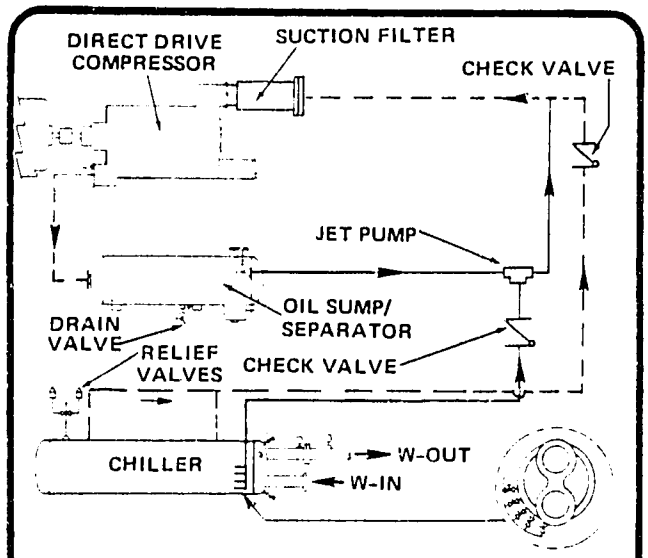

FIG. 14 JET PUMP (FLOODED CHILLER)

NOTE: Avoid having valves wide open that draw only gas from the chiller.

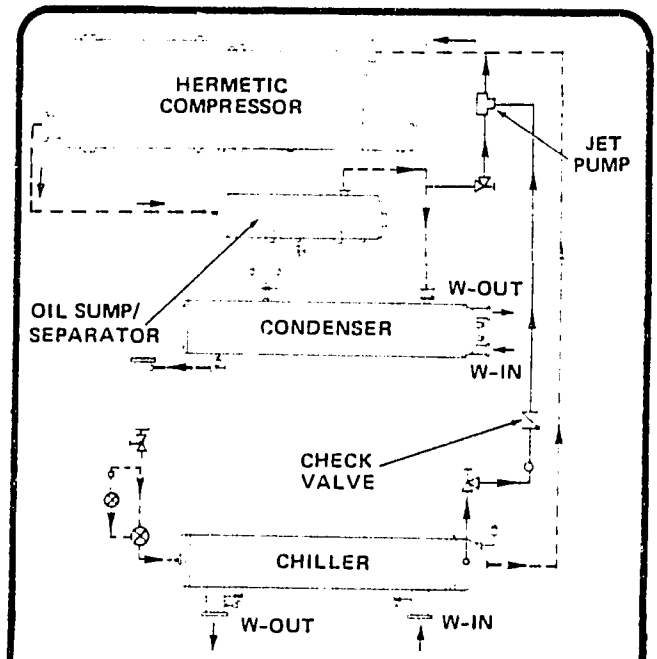

FIG. 15 JET PUMP DIRECT EXPANSION

- **Direct Expansion Chiller** - The direct expansion chiller has one valve tap in the chiller suction head which is connected to the suction of the jet pump. Both the valve at the chiller head and the valve at the jet pump remain fully open.

3. OIL COOLING SYSTEM OPERATION

Liquid injection or a water cooled oil cooler is supplied for oil cooling.

3a. Liquid Injection

Liquid injection is used to cool the oil and refrigerant vapor, and is controlled within the compressor during

compression to insure efficient oil separation, minimize refrigerant solubility in the oil, and maximize lubrication properties. By controlling oil temperature on hermetic units, the liquid injection system, additionally, facilitates the dissipation of heat from the motor windings.

- **Normal Operation** - This system is designed to hold the oil temperature above 135°F (57.2°C) to minimize excessive oil dilution. This is accomplished by a thermostat sensing discharge temperature. The liquid injection solenoid will de-energize when the discharge temperature reaches the design cut-out

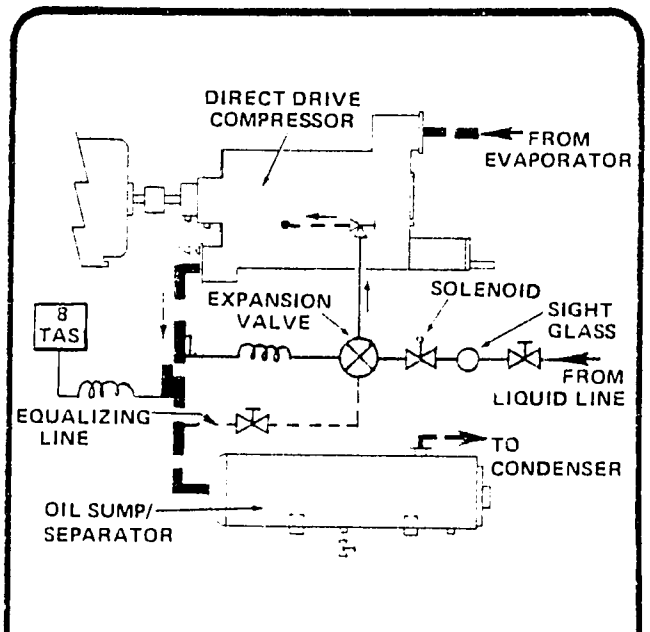

FIG. 16 LIQUID INJECTION

setting for the thermostat, as noted on the unit wiring diagram accompanying the unit. The solenoid will cycle to maintain 140°F ± 5°F (60°C) oil temperature, minimizing dissolved refrigerant in the oil.

To insure proper oil separation by maintaining discharge superheat under all load conditions, the thermo-expansion valve is factory pre-set to maintain a minimum 40° thru 50F° (22.2° thru 27.8C°) discharge superheat at 100% load. On any given unit, the controls should be set to maintain a minimum of 35F° (19.4C°) superheat at any load.

- **Heat Reclaim/R-12 Units** - The liquid injection assembly for heat reclaim and R-12 units operate in the same manner except that the liquid injection throttling device is a temperature operated valve that will react to discharge temperature only rather than discharge superheat.

3b. Seal Oil Cooling (Open Drive Units)

Seal oil cooling is provided to control the viscosity and temperature of the oil supplied to the shaft seal cavity under all operating conditions. The temperature of the oil entering the seal cavity is maintained at 115°F ± 5°F (46°C ± 2.8°C). The major components of the seal oil cooling system consist of a liquid line solenoid, a temperature operated expansion valve, a direct expansion heat exchanger and a safety thermostat. A check valve is provided upstream of the seal cavity to maintain a full oil level in the cavity, preventing refrigerant leakage through the seal during shut-down.

- **Normal Operation** - The seal oil cooler liquid line solenoid energizes on start-up allowing liquid refrigerant to enter the heat exchanger. The safety thermostat is electrically bypassed during start-up by a timer until conditions stabilize for normal operation. The expansion valve modulates refrigerant flow entering the heat exchanger by responding quickly to temperature changes in the oil entering the seal cavity.

3c. Water Cooled Oil Coolers (Low Temperature or Special Applications)

Constructed with an externally finned tube bundle mounted in a steel shell, the heat exchanger provides the required oil cooling capacity under all operating conditions. A thermostatically actuated two way valve regulates the water flow through the tubes, as the sensing element monitors the leaving oil temperature. The baffle arrangement in the shell side channels the oil flow for a more effective heat transfer.

4. HIGH/LOW SIDE COMPONENT OPERATION

4a. Discharge Check Valve

To prevent migration of liquid refrigerant from the condenser into the separator during shutdown, a discharge check valve is used. Located between the separator and condenser, the check valve also prevents excessive spin-down of the compressor, and allows the unit to be pumped down for servicing.

4b. Condenser

The condenser is a 'shell and tube' heat exchanger which serves to condense the discharge refrigerant vapor by removing heat. Water is circulated through the tubes absorbing heat from the discharge vapor condensing in the shell side of the externally finned copper tube bundle. The water flow rate or temper-

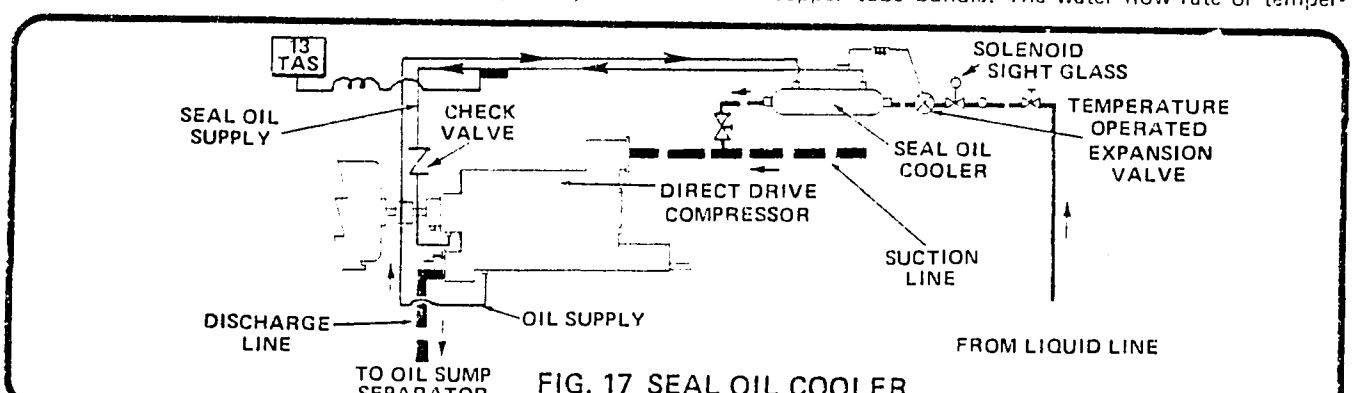

FIG. 17 SEAL OIL COOLER

ature will have a significant effect on refrigerant condensing pressures under all operating conditions.

Dual refrigerant relief valves are mounted on the condenser vessel serving as a protection device.

- **Heat Reclaim Condenser** – As heat reclaim applications are specialized, the most economical operation must be evaluated for each job. Generally, when the heat reclaim water circuit is operating, the condensing pressure elevates because of a high entering water temperature, resulting in a higher kilowatt draw. When or if the tower water should operate during the heat reclaim cycle depends upon the heating and cooling load characteristics, and the percentage of heat rejected for heat reclaim.

4c. Filter Drier

The filter/drier is composed of a strainer and replaceable dessicant cartridges which remove contaminants, acid, and moisture from the refrigerant. A shut-off valve is at the outlet end of the filter/drier.

4d. Throttling

Throttling liquid refrigerant serves to regulate the refrigerant flow into the chiller while maintaining the required evaporating temperature. Throttling is accomplished by a multiple valve arrangement. The pilot thermo valve is mounted in a branch liquid line and is used in conjunction with the pilot operated solenoid (P.O.S.) thermal expansion valve which is located in the main liquid line.

- **Pilot Thermo Valve** – The pilot thermo valve meters a branch refrigerant liquid line while sensing either leaving water temperature or suction temperature, and serves to supply a pilot signal to the P.O.S. valve.

- **Pilot Operated Solenoid Valve** – The P.O.S. valve positions according to the signal pilot supplied from the pilot thermo valve. During shutdown the solenoid valve closes the pilot line allowing the valve to close. A manual opening stem is provided for service purposes and must be fully counterclockwise for normal operation.

4e. Chillers

Designed for a fixed flow rate, the "shell and tube" heat exchanger transfers heat from the medium being cooled to the refrigerant, causing the refrigerant to vaporize. The two types of chillers are flooded and direct expansion. Both types have pressure taps at the water inlet and outlet connections, a bulbwell for the water freeze-up thermostat, and a temperature load control sensor.

- **Flooded** – Flooded chillers have liquid refrigerant flooding the lower portion of the shell with the medium being cooled flowing through the tubes. The tubes are externally finned so that the refrigerant will have a large surface area to extract heat from the medium being cooled. Also supplied on the flooded chiller is a dual relief valve to serve as a protection device.

- **Direct Expansion** – The refrigerant enters the chiller through a distributor where it is directed into the tubes (the evaporating refrigerant is at a rate depending upon the cooling load). The tubes are of the patented Inner-Fin® extended surface design which improves heat transfer while minimizing refrigerant pressure drop, permitting a compact and efficient chiller design. The refrigerant vapor passes through an effective filter built into the suction head of the chiller (for additional system protection). The chiller is provided with a single relief valve to protect it from refrigerant over pressure.

4f. Suction Check Valve

Located in the piping between the compressor and the chiller, they are used to prevent excessive "spin-down", equalization of pressure between the compressor and chiller, and to prevent migration of oil into the chiller.

4g. Suction Filter

- **Flooded Units** – Units with a flooded chiller have a 10 micron suction filter mounted on the compressor at the compressor inlet.

- **Direct Expansion Units** – Units with a direct expansion chiller have a dacron felt filter located in the suction head of the chiller.

D. OPTIONAL SUB-SYSTEM OPERATION

1. XTRATHERM VAPOR INJECTION SYSTEM

The vapor injection system is used to provide additional subcooling to the liquid refrigerant supplied to the evaporator for increased refrigeration effect and system capacity. Its main components are a subcooler, subcooler thermo-expansion valve, evaporator pressure regulator, check valve, solenoid valve, vapor injection filter, oil feed valve, dual feed lines to the pilot valve of the main thermo-expansion valve and a minimum load limit switch.

A reed switch is located on the slide valve indicator at approximately 65% of full load. It may be adjusted between 40% and 75% to suit job conditions. The switch is used to control the solenoid which shuts down the vapor injection system on the off cycle or whenever the system becomes ineffective. When the capacity of the compressor reaches the load at which the reed switch is set, the solenoid will open and a small portion of the liquid refrigerant is diverted through the expansion valve to the subcooler. This refrigerant evaporates and in the process absorbs some of the heat of the liquid refrigerant flowing through the subcooler to the evaporator. The evaporator pressure regulator is used to control the pressure leaving the subcooler, which keeps the subcooling liquid temperature relatively constant.

2. HOT GAS BYPASS – UNLOADED START

Hot gas bypass unloaded start is accomplished by diverting gas from the compressor discharge port through a solenoid valve to the compressor suction port. The bypass line is open at start-up and the solenoid valve is used to close it. The purpose for unloading is that the compressor is designed to start under a low load (torque) condition, such as when the low

D. OPTIONAL SUB-SYSTEM OPERATION CONT.

side and high side pressures are equal (balance). The equal pressures allow the compressor and motor to reach operating RPM before the solenoid closes and compression starts. The motor therefore draws fewer inrush amps. In the case of open compressor units, unloaded start may allow use of a smaller horsepower motor.

3. HOT GAS BYPASS CAPACITY CONTROL

Hot gas bypass capacity control is used to feed hot gas directly into the chiller when the compressor's load falls to 10% or less. When this occurs, a solenoid valve in the capacity control line is energized by a reed switch in the slide valve indicator. The introduction of hot gas provides a stable refrigerant flow and keeps the machine from short cycling under low load conditions.

4. REED SWITCH

The reed switching assembly is used in conjunction with a flip-pac relay which controls various system components at different percent slide valve positions. Adjustments may be required upon installation to balance the unit performance with load characteristics.

- **High/Low Limit Switches** - These serve to limit slide valve positioning from extending beyond the range of application. The low limit switch is adjusted correctly when the differential temperature across the chiller is 1F° to 2F° (.56C° to 1.12C°). The high limit switch is factory set and should be adjusted only by an Authorized Dunham-Bush serviceman.
- **Hot Gas Capacity Control Limit Switch** - (If applicable) is used in conjunction with the low limit switch.
- **Large TX Valve Limit Switch** - (If applicable) Refer to the specific unit wiring diagram for correct positioning.

For any additional information, refer to the specific unit wiring diagram or to Dunham-Bush Service Bulletin No. SR109A.

E. TYPICAL PIPING SCHEMATICS

The piping schematics which appear on the next three pages are typical only. These schematics depict control systems and refrigerant and oil flow through the unit to furnish you with an understanding of the screw compressor packaged chiller.

Shown below are the symbols, codes and items with their descriptions which appear on the piping schematic.

TEMPERATURE AND PRESSURE CONTROL

CODE	DESCRIPTION
2TAS	Freeze Up Thermostat
7TAS	Low Refrigerant Temp. Thermostat
8TAS	Low Discharge Temp. Thermostat
12TAS	Oil Temperature Thermostat
13TAS	Seal Oil Temperature Thermostat
1PS	Hi-Low Refrigerant Pressure Safety Sw.
2PS	Low Refrigerant Pressure Unload Sw.
3PS	Low Oil Pressure Safety Sw.

PIPING SYMBOLS

SYMBOL	DESCRIPTION	SYMBOL	DESCRIPTION
	Refrigerant		Hand Valve
	Refrigerant & Oil		Hand Angle Valve
	Oil		Solenoid Valve
	Control		Check Valve
	Remote Bulb Capiliary Tubing		Sight Glass
	Unloaded Start		Expansion Valve
	Hot Gas Bypass		Pilot Expansion Valve
	Relief Valve		

COMPONENTS

ITEM	DESCRIPTION	ITEM	DESCRIPTION
1	Refrigerant Relief Valve, Chiller	17	Compressor Oil Pressure Balancing Valve
2	Refrigerant Relief Valve, Condenser	18	Refrigerant Expansion Valve
3	Liquid Injection Angle Valve	19	Refrigerant Pilot Expansion Valve
4	Oil Pressure Relief Valve	20	Liquid Injection Expansion Valve
5	Water Temperature Bulbwell	21	Seal Oil Expansion Valve
6	Unloader Solenoid Valve Assembly	22	Unloaded Start Solenoid Valve
7	Oil Injection Angle Valve	23	Hot Gas Bypass Solenoid valve
8	Seal Oil Solenoid Valve	24	Suction Check Valve
9	Load Control Temperature Sensor	25	Oil Filter
10	Water Flow Switch	26	Oil Strainer
11	Liquid Injection Solenoid Valve	27	External Oil Pump
12	Sump Oil Drain	28	Oil Return Check Valve
13	Sump Oil Heater	29	Jet Pump
14	Chiller Freeze Up Bulbwell	30	Jet Pump Check Valve
15	Discharge Refrigerant Check Valve	31	Suction Filter
16	Unloader Throttling Valve		

III. OPERATION

E. TYPICAL PIPING SCHEMATICS CONTINUED

NOTE: DO NOT use this piping diagram to troubleshoot your unit. It is typical only and may not reflect the components provided on your unit.

TYPICAL PIPING SCHEMATIC (PCX180H)

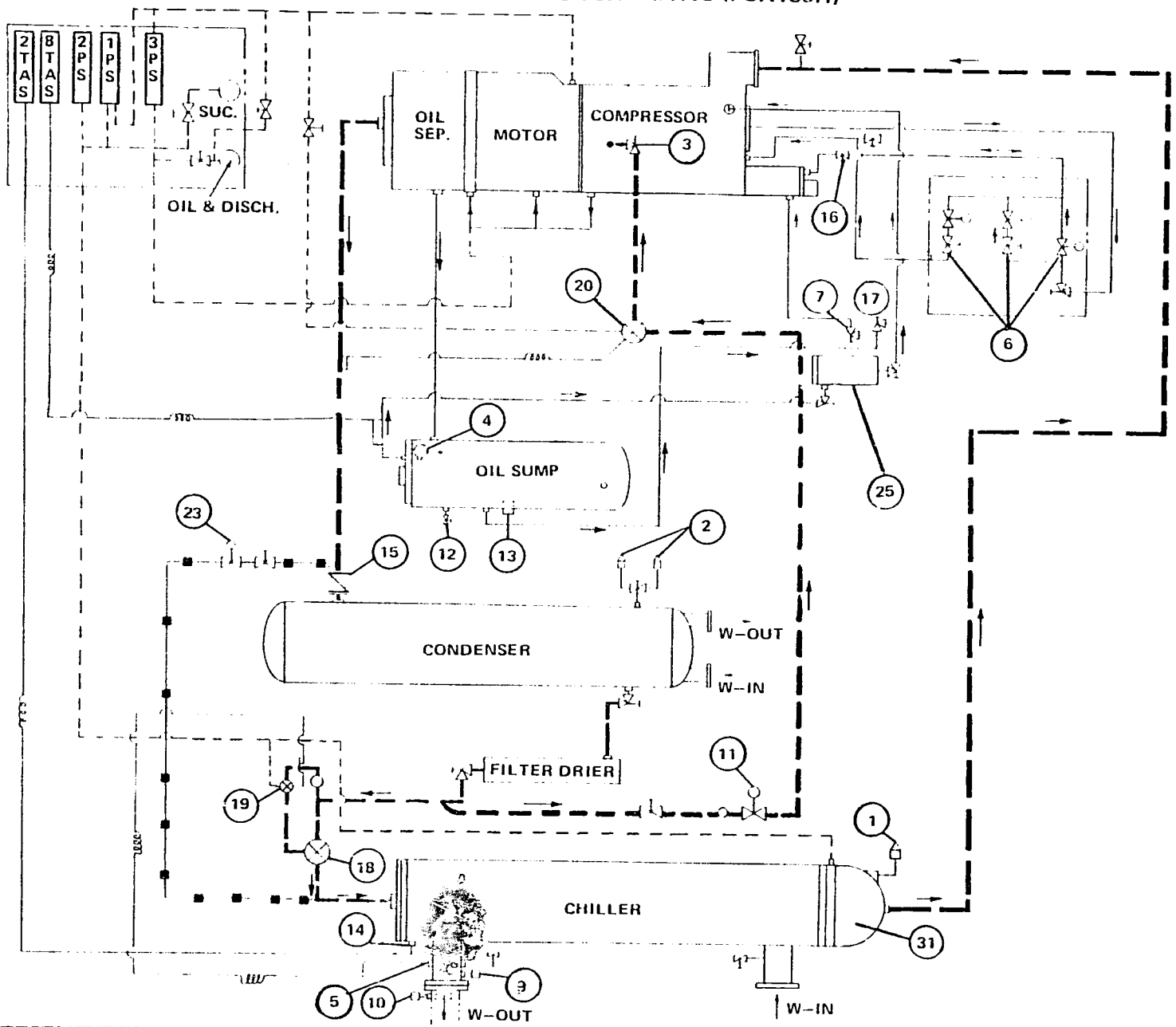

III. OPERATION

E. TYPICAL PIPING SCHEMATICS CONTINUED

NOTE: DO NOT use this piping diagram to troubleshoot your unit. It is typical only and may not reflect the components provided on your unit.

TYPICAL PIPING SCHEMATIC - (PCX290-0)

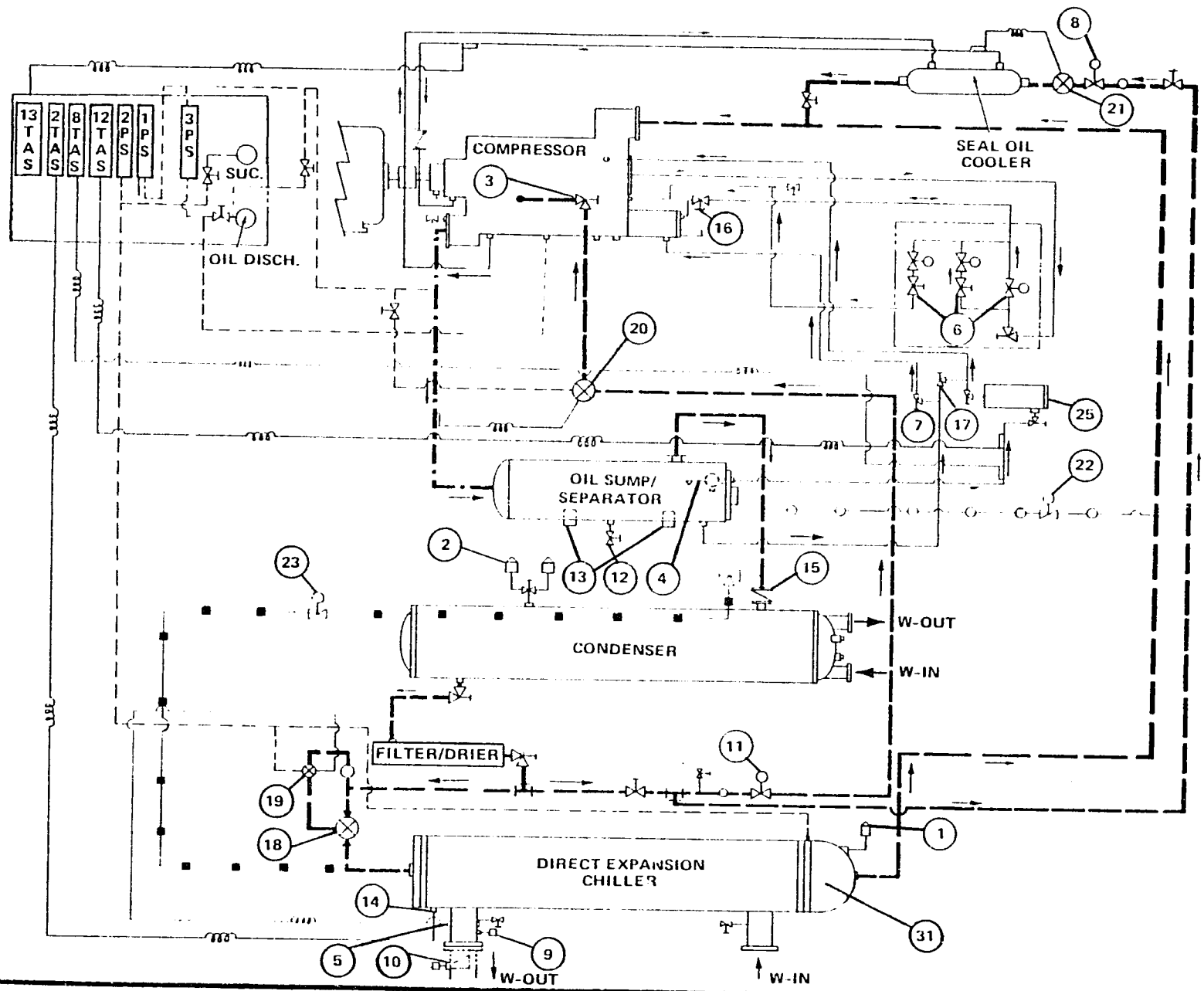

E. TYPICAL PIPING SCHEMATICS CONTINUED

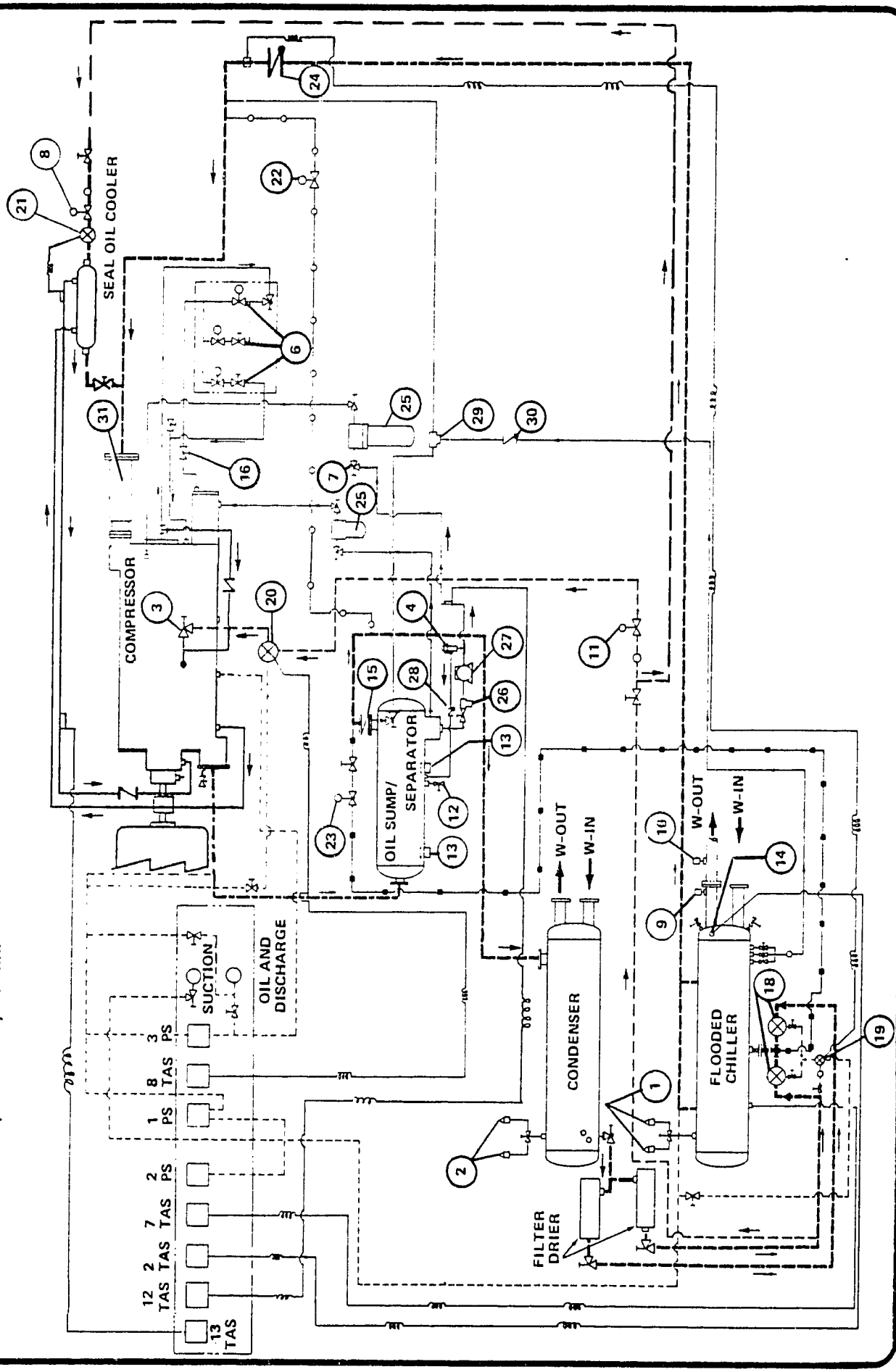

TYPICAL PIPING SCHEMATIC FLOODED UNITS

NOTE: DO NOT use this piping diagram to troubleshoot your unit. It is typical only and may not reflect the components provided on your unit.

III. OPERATION

F. FUNCTIONS OF ELECTRICAL CONTROLS

Description of controls and the wiring schematics in this manual are typical only. Wiring schematics for a specific unit are shipped with the unit. The wiring schematic also lists control settings.

The electrical panel contains not only controls but also gauges and lights to help determine the phase and quality of operation. The gauges monitor the suction, discharge and discharge oil pressure. The difference between the discharge oil pressure and discharge pressure is the net oil pressure. It should be noted that all gauges should be closed except when they are being read. Indicating lights reflect the following conditions or phases of the unit.

1. LIGHTS

1LT - Power on - integral part of on-off switch (red or white)

2LT - Unit is off on safety controls (red)

3LT - Oil pressure below minimum limits (red)

4LT - Anti-recycle timer is in the timing phase (green)

5LT - Start up delay after the oil pump has started (amber)

2. MANUAL CONTROLS

1CB - Control Circuit Breaker

2CB - Oil Sump Heaters Circuit Breaker

1SS - Master Control Switch - Completes a circuit enabling the unit to start.
Hermetic compressors - If the unit shuts down because a safety switch opened, the switch must be pushed to the "reset" position to reset the motor winding protector (1TAS) and the oil circuit.

Open compressors - If the unit shuts down because of an oil failure, the switch must be pushed to the "off" position to reset the oil circuit.

3. SAFETY CONTROLS

2FU - Compressor Motor Housing Fuse

1TAS - Hermetic Compressor Motor Winding
Protects the motor from overheating by opening the safety circuit if the temperature at any of the three strategically placed sensors exceeds the preset temperature (manual reset).

OL - Compressor and Oil Pump Starter Overloads
Provides locked rotor and overcurrent protection (manual reset).

1PS - Hi-Lo Pressure Switch
Protects against high discharge pressure and low suction pressure. If the discharge pressure exceeds the preset pressure, the contact will open. It must be manually reset on high pressure cutout. If the suction pressure fails below the pre-set pressure, the contact will open. It will automatically reset on low pressure cutout.

13TAS - Seal Oil Temperature Thermostat
Open Compressors
Protects against excessive temperature of the oil cooling the compressor seal. Opens if temperature rises over the preset temperature (see 12TR) (automatic reset).

12TAS - High Oil Temperature
Senses oil temperature after the oil pump. Protects against high oil temperature by opening if the temperature rises above the preset temperature (automatic reset).

7TAS - Low Refrigerant Temperature Protection
Flooded Units
Senses refrigerant temperature in flooded chiller. Will open if temperature falls below preset temperature (automatic reset).

2TAS - Freeze Up Thermostat
Monitors the chilled medium. If the temperature falls below preset temperature, contact will open (automatic reset).

FLS - Chiller Flow Switch
Monitors the flow of the chilled medium. Contact will open if flow falls below preset level.

6TAS - Oil Pump Motor Winding Protector - Hermetic Oil Pump Only
Temperature is monitored by thermostats embedded in the motor winding. Contact will open if preset temperature is exceeded (automatic reset).

CWS - Chilled Water Pump Starter
Auxiliary contact on starter is closed whenever circuit to chilled water pump motor is closed.

1TR - Anti-Recycle Timer
Prevents compressor from starting more than three times in one hour. Completes safety circuit.

4. AUTOMATIC AND OPERATING CONTROLS

HTR - Oil Sump & Compressor Motor Housing Heaters
Must be operating a minimum of twenty-four (24) hours and the sump oil temperature must be at a minimum of 100°F (38°C) prior to start-up. They do not operate during compressor operation.

1CR - Master Control Relay
When all safety controls are closed, relay will close locking itself in and completing a circuit to the remainder of the control circuit.

1M - Oil Pump Starter
Starts oil pump and completes circuit to the remainder of the control circuit.

3TR - Oil Pump Shut Down Time Delay
Starts at same time as oil pump starter, contacts are timed to open circuit to oil pump starter after 60 seconds delay if oil pressure is not proved.

3PS - Oil Pressure Switch
Protects compressor against loss of oil pressure. Opens circuit to oil pressure failure time delay (2TR) when predetermined pressure is reached. If pressure is not reached the timer will time out.

2TR - Oil Pressure Failure Time Delay
Begins timing for 20 seconds upon operation of oil pump starter, or if an oil failure is sensed by 3PS. If oil has not reached predetermined pressure, 3PS will remain closed and in twenty (20) seconds the contact will open and shut down the system (manual reset).

F. FUNCTIONS OF ELECTRICAL CONTROLS CONT.

4TR - **Start-Up Delay**
Begins timing for 60 seconds when the oil pump starter operates. Will close the circuit to the compressor control relay (3CR) in one (1) minute. The purpose is to lubricate the compressor and allow the compressor to unload before starting.

2CR - **Transfer Relay**
Activates when the oil pump starter operates. Locks in the oil pump starter and shuts down the oil sump and compressor heaters.

3CR - **Compressor Control Relay**
Completes a circuit to the temperature load controller (TLC), compressor starter control circuit, elapsed time indicator (6TR), seal oil thermostat by-pass timer (12TR), seal oil cooler solenoid (13SOL), liquid injection valve solenoid (8SOL), and opens the circuit to the fast unload solenoid (6SOL) to provide unloaded start.

2PS - **Low Suction Pressure Unload Switch**
Flooded Chillers - senses suction pressure and will complete a circuit to the fast unload solenoid (6SOL) if the pressure falls below the preset level. Direct Expansion Chiller - senses suction pressure completing a circuit to the fast unload solenoid (6SOL), the lock in relay (4CR) and the expansion valve solenoid when the pre-set pressure is reached.

4CR - **Lock In Relay - Direct Expansion Chiller**
When the suction pressure switch (2PS) closes upon low pressure and pumps the unit down, this relay will be energized, locking-in itself and the expansion valve solenoid (4SOL).

6TR - **Elapsed Time Indicator**
Indicates the actual amount of hours the compressor has operated.

12TR - **Seal Oil Thermostat Bypass Timer**
When energized will bypass the seal oil thermostat (13TAS) for a period of four (4) minutes to allow the cooled oil to flow from the seal oil cooler to the compressor seal preventing complete shutdown of the system. If the seal oil temperature has not returned to the preset maximum in this time, the system will shutdown.

4SOL - 5SOL - **Expansion Valve Solenoids**
Controls flow of the refrigerant to the expansion valves used to meet the required refrigeration or air conditioning load.

8SOL - **Liquid Injection Solenoid**
Controls flow of refrigerant to the expansion valves used to control the operating temperature of the compressor.

8TAS - **Low Discharge Temperature Thermostat**
If the discharge temperature is not sufficient, this control will open preventing the liquid injection solenoid from operating.

9CR - **Holding Relay**
Controls the large expansion valve solenoid on units with direct expansion chillers. Will open or close the solenoid depending upon the information received from the reed switches (1RS and 2RS

5RS & 6RS - **Reed or Proximity Switches**
Located on the slide valve indicator, they are activated by a magnet traveling in relationship with the slide valve. They control the large expansion valve solenoid through holding relay 9CR.

1SOL - **Load Solenoid Valve**
When energized, it provides a path to dissipate hydraulic pressure on the slide valve piston which allows discharge refrigerant gas pressure to move the slide valve in the load direction.

2SOL - **Unload Solenoid**
When activated allows pressurized hydraulic fluid to flow through a metering valve to the slide valve piston causing it to move in the unload direction.

6SOL - **Fast Unload Solenoid**
Performs the same function as the unload solenoid except that it does not have a metering valve. It operates at start up to provide a minimum load and when the suction pressure falls below the preset pressure of the Low Suction Pressure Unload Switch (2PS)

8SOL - **Liquid Injection Solenoid Valve**
When activated permits liquid refrigerant to flow to the liquid injection expansion valve.

13SOL - **Seal Oil Cooler Solenoid Valve**
When energized allows liquid refrigerant to flow to the seal oil cooler expansion valve.

TLC - **Temperature Load Controller**
The temperature load controller (TLC) controls a hydraulic cylinder giving the unit an infinitely variable capacity control. It senses the temperature of the chilled water through a sensor located at the chilled water outlet connection. As the water temperature rises or falls, the TLC will signal the unloader system to increase or decrease the compressor capacity to match the load and keep the chilled water at the preset temperature.

When the TLC receives a signal from the chilled water temperature sensor that the load has increased, it completes a circuit to the load solenoid causing the compressor to load. After the required capacity of the compressor is reached the load solenoid will be de-energized. The TLC will continually monitor the temperature sensor completing and opening circuits to the load and unload solenoids as necessary.

The TLC also senses the current draw of the motor through a current transformer located in the starter control panel. If the motor load reaches 100% of the preset maximum load setting, the unload solenoid will be energized and the compressor will unload. The current control will override all other controls in the auto or manual positions.

5. HEAT RECLAIM CONTROLS

All heat reclaim controls, shown on the typical schematic, are used to prevent the packaged chiller from tripping out on high pressure during periods of heat reclaim, to provide higher condensing temperatures during these periods, and to insure a minimum of rejected heat for reclamation during those periods of light cooling load. It is the responsibility of the engineer and contractor of a particular job, to provide controls necessary for the operation and safety of the heat reclaim and chilled water systems external to the packaged chiiler.

13PS - **Head Pressure Control**
This control senses discharge pressure, and has three steps of control and is automatically reset:

1. When the first step of rise in pressure is reached, timed relay (11TR) will be activated and power will be available to the low slide valve block relay (6CR) through the low limit relay (7CR).

2. Rise in pressure to close the second stage will prevent the compressor from loading further.

3. If the pressure should rise closing the third step, the control of the unload solenoid (2SOL) by the temperature load controller(TLC) will be bypassed causing the compressor to unload.

11TR - **Heat Reclaim Transition Timer**
When this control is activated the instantaneous contacts open the circuit to the load solenoid (1SOL) preventing it from loading, and closes a circuit to the unload solenoid (2SOL) bypassing the temperature load controller (TLC) causing the system to unload. The timed contact, which is delayed for three minutes, activates the heat reclaim relay (11CR).

11CR - **Heat Reclaim Relay**
Energization of this relay will close a circuit to the load solenoid (1SOL) and open a circuit to the unload solenoid (2SOL). putting them under the influence of the temperature load controller (TLC).

3RS & 4RS - **Low Limit Reed Switches**
These are proximity switches located on the slide valve indicator and are activated by a moving magnet. They are set to prevent the compressor from unloading below 25% of its slide valve position through the low limit control relay (7CR).

7CR - **Low Limit Control Relay**
This relay is activated by the reed switches (3RS & 4RS) and through its action controls the low slide valve block relay (6CR).

6CR - **Low Slide Valve Block Relay**
When the compressor has unloaded to the point at which the reed switches are set, approximately 25% of slide valve position, this control relay will be activated. It will open circuits to the unload solenoid (2SOL) and fast unload solenoid (6SOL) preventing the unit from unloading further. In addition, a circuit is closed to the hot gas solenoid (3SOL).

3SOL - **Hot Gas Solenoid**
When activated this solenoid will allow discharge gas to be bypassed to the inlet side of the chiller.

2PS - **Low Suction Pressure Switch**
Sensing low pressure this switch will cause the compressor to unload through the fast unload solenoid (6SOL) on flooded units and through control relay (12CR) on direct expansion units.

12CR - **Low Suction Pressure Unload Relay Direct Expansion Units**
This relay when activated opens a circuit to the load solenoid (1SOL) and closes a circuit to the unload solenoid (2SOL) bypassing the temperature load controller (TLC).

16TAS - **High Entering Chilled Water Safety Flooded Units**
Senses the chilled water temperature and if it rises to the preset temperature will cause the compressor to unload through the fast unload solenoid (6SOL).

6. HEAT RECLAIM OPTION

1RS & 2RS - **High Limit Reed Switches**
These proximity switches are located on the slide valve indicator and are activated by a magnetic field. They are set to prevent the compressor from loading above a set point.

8CR - **High Limit Control Relay**
This relay is activated by reed switches (1RS & 2RS) and through its action controls the high slide valve block relay (5CR).

5CR - **High Slide Valve Block Relay**
When the compressor has loaded to the point where the reed switches are set, this control relay will be activated. It will open a circuit to the load solenoid preventing it from loading further.

7. TYPICAL START-UP OF PACKAGED CHILLER

Assume that the following conditions are met:

- Water is flowing through the chiller.
- All safety controls are made.
- Power has been furnished to the unit for twenty-four hours and the oil is at the proper temperature.
- Cooling load is available.

The control switch, 1SS, is made and the following action takes place.

1. Power on light (1LT) illuminates the master control relay (1CR) is energized and its contacts close.

2. Through the operation of 1CR the oil pump starter (1M) is energized and the oil pump shut-down relay (3TR) begins timing for 60 seconds before opening its contacts.

3. If insufficient pressure differential is sensed by the compressor oil pressure differential switch (3PS), the oil pressure failure time delay relay (2TR) and oil pump time delay relay (3TR) will simultaneously start to time. (2TR) will time open after 20 seconds and (3TR) will time open after 60 seconds. This action will de-energize the transfer relay (2CR). Its contacts will open and de-energize the oil pump, preventing the machine from starting. If the unit is operating this action will shut the unit off.
4. When the start-up time delay (4TR) has completed its timing function, it will energize the compressor control relay (3CR).

- **Direct Expansion Units** - Starting sequence is as indicated in steps 1 thru 4 above plus:

5. Control Relay (3CR) completes a circuit to the compressor starter, the elapsed time indicator (6TR) and furnishes power through the transformer (2T) to the temperature load controller (TLC). It also furnishes control power to the pumpdown switch (2PS). It also opens a circuit to the fast unload solenoid (6SOL).
6. When the compressor has pumped down the low pressure switch (2PS) will close, furnishing power to the lock in relay (4CR), and the expansion valve solenoid (4SOL). The expansion valve will begin to feed the unit and the unit will now be under the influence of the temperature load controller (TLC).

- **Flooded Units** - Starting sequence is as indicated in steps 1 thru 4 above plus:

5. Control relay (3CR) completes the circuit to the compressor motor starter, the elapsed time indicator (6TR), and furnishes power through the transformer (2T) to the temperature load controller (TLC). The expansion valves (4SOL & 5SOL), liquid injection solenoid (8SOL), seal oil cooler solenoid (13SOL), and seal oil thermostat are also energized. 3CR also opens a circuit to the fast unload solenoid. The compressor will now be under the control of the temperature load controller (TLC).

- **Heat Reclaim Units** - Starting sequence is as indicated in steps 1 thru 4 above plus:

5. Control relay (3CR) completes a circuit to the compressor starter control circuit, expansion valves (4SOL & 5SOL), seal oil cooler solenoid (13SOL), liquid injection solenoid (8SOL) seal oil thermostat bypass timer (12TR), elapsed time meter (6TR), and furnishes power through the transformer (2T) to the temperature load controller (TLC). It also opens a circuit to the fast unload solenoid (6SOL). The unit is now operating directly under the temperature load controller (TLC).

STARTER CONNECTIONS

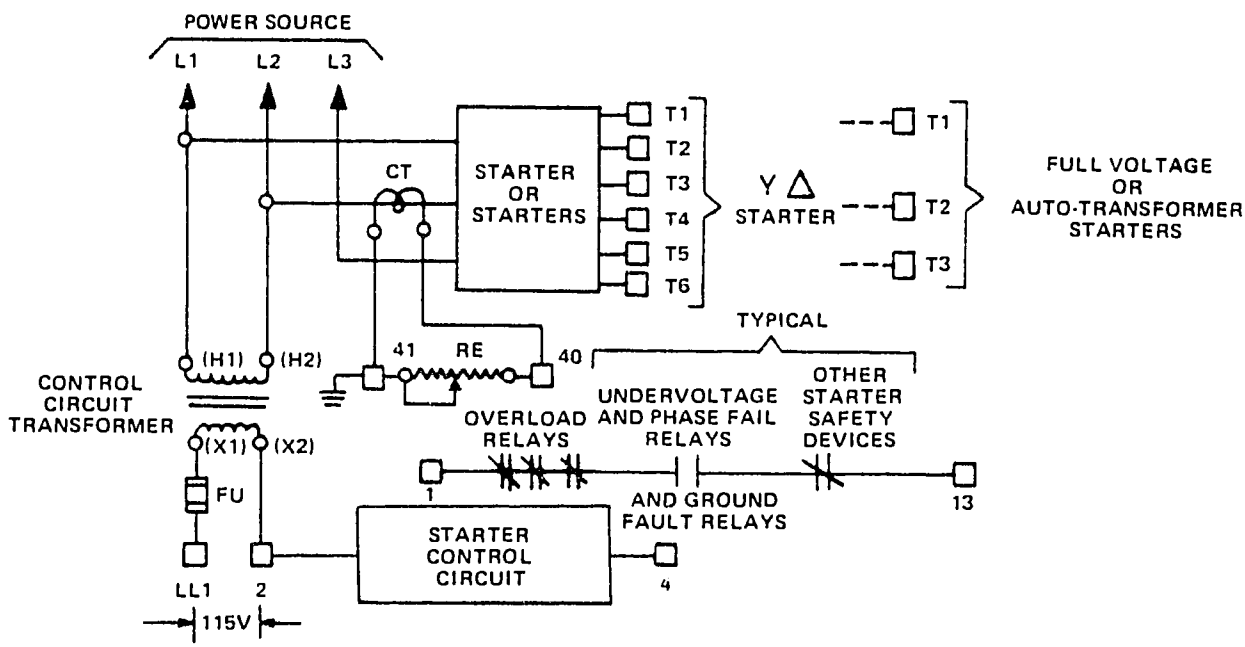

NOTES:

1. Control transformer is optional. X2 is to be grounded only when transformer is furnished.
2. Starter must be under direct control of terminals 2 & 4. No device either manual or automatic shall be used which will stop or start the compressor motor independently of the signal applied to terminals 2 & 4. Any such necessary devices shall be connected between terminals 1 & 13 as shown under "typical" above and shall be manual reset.
3. Field wiring terminals must be numbered as shown and must be directly connected to like numbered terminals in PCX/DBX control panel.

G. TYPICAL ELECTRICAL SCHEMATICS

TYPICAL HERMETIC - FLOODED CHILLER

These diagrams are typical only. Consult the diagram accompanying the unit for control settings and wiring logic.

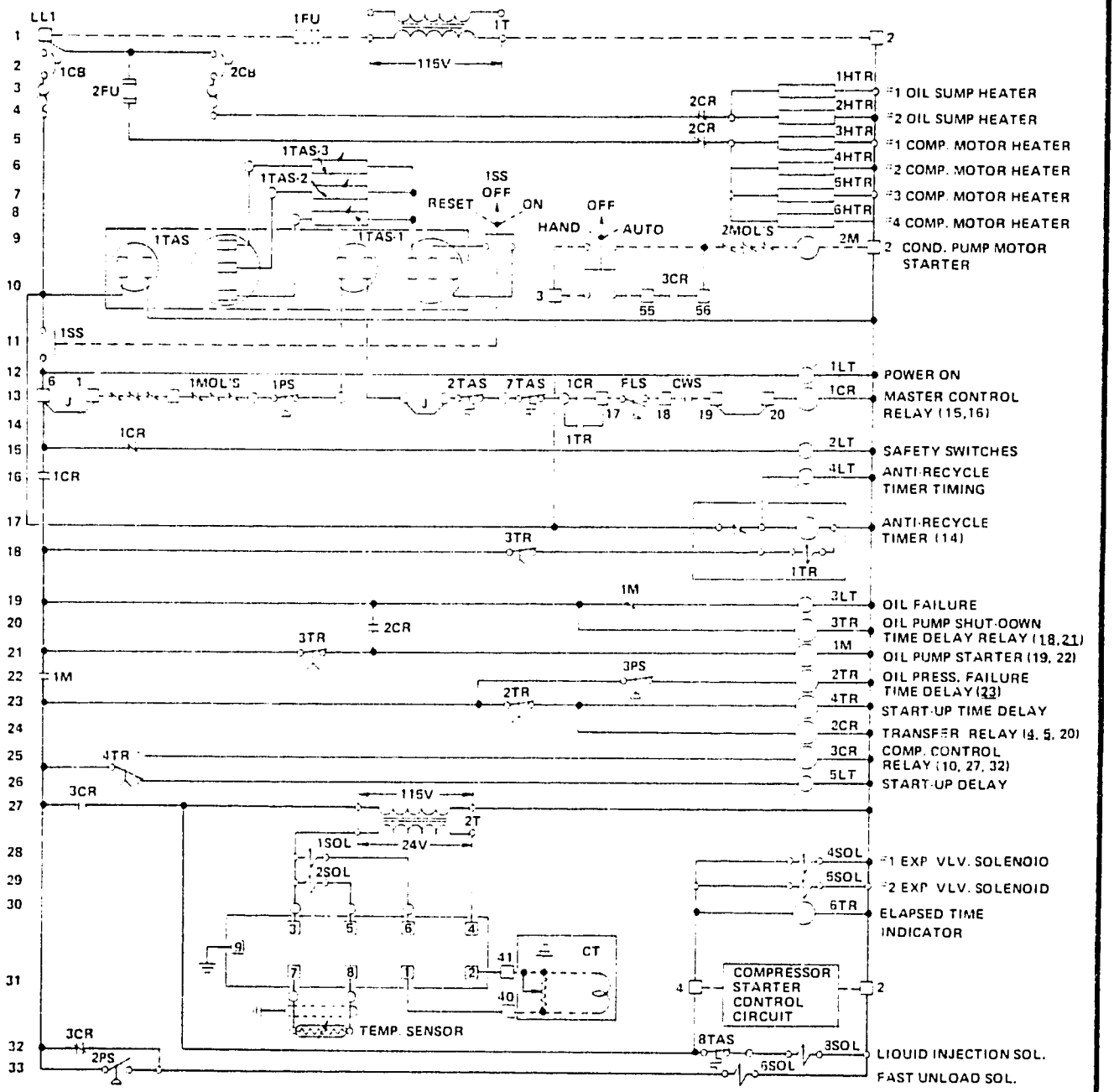

G. TYPICAL ELECTRICAL SCHEMATICS CONTINUED

TYPICAL HERMETIC - DIRECT EXPANSION CHILLER

These diagrams are typical only. Consult the diagram accompanying the unit for control settings and wiring logic.

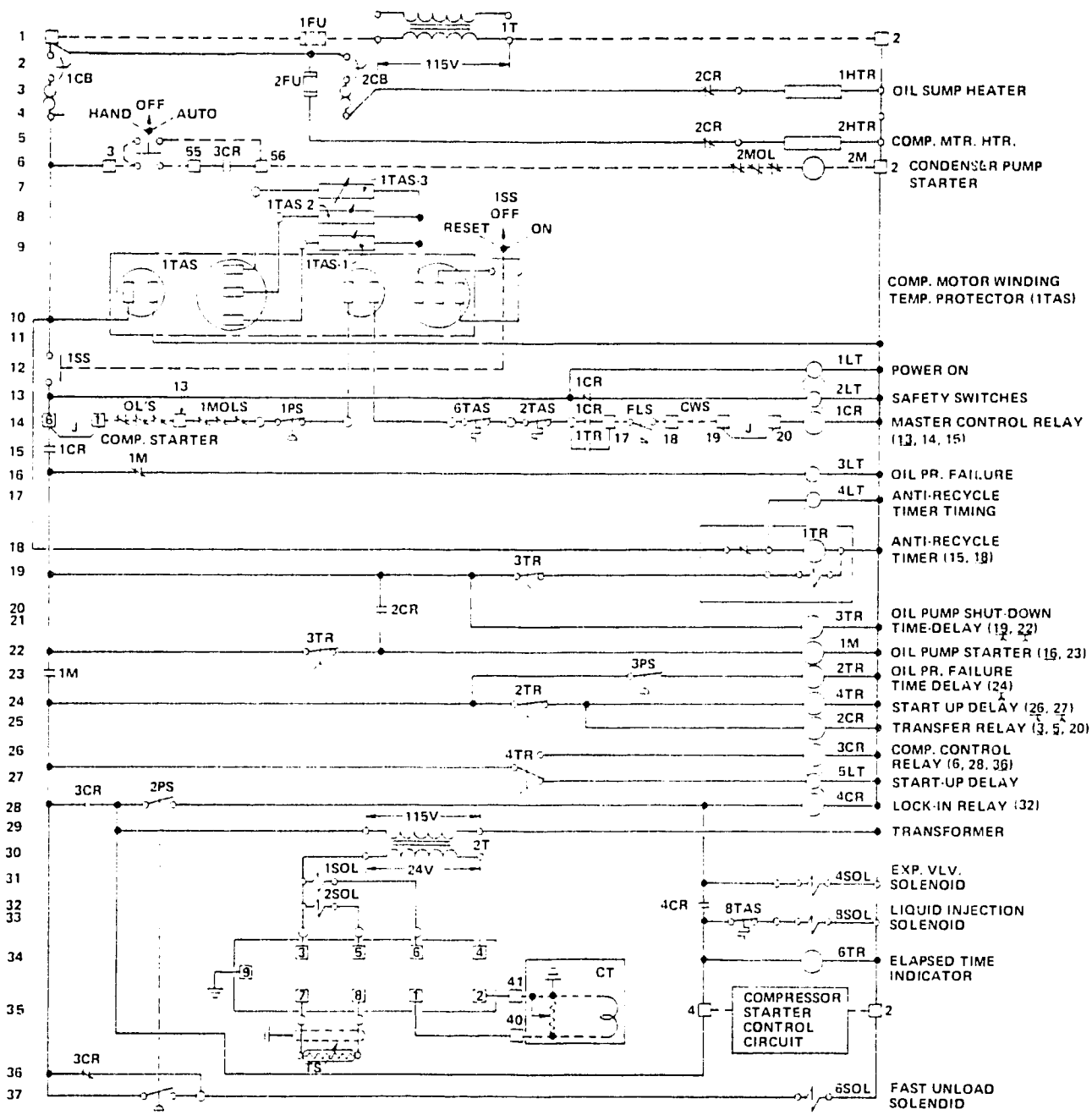

TYPICAL DIRECT DRIVE DIRECT EXPANSION CHILLER

These diagrams are typical only. Consult the diagram accompanying the unit for control settings and wiring logic.

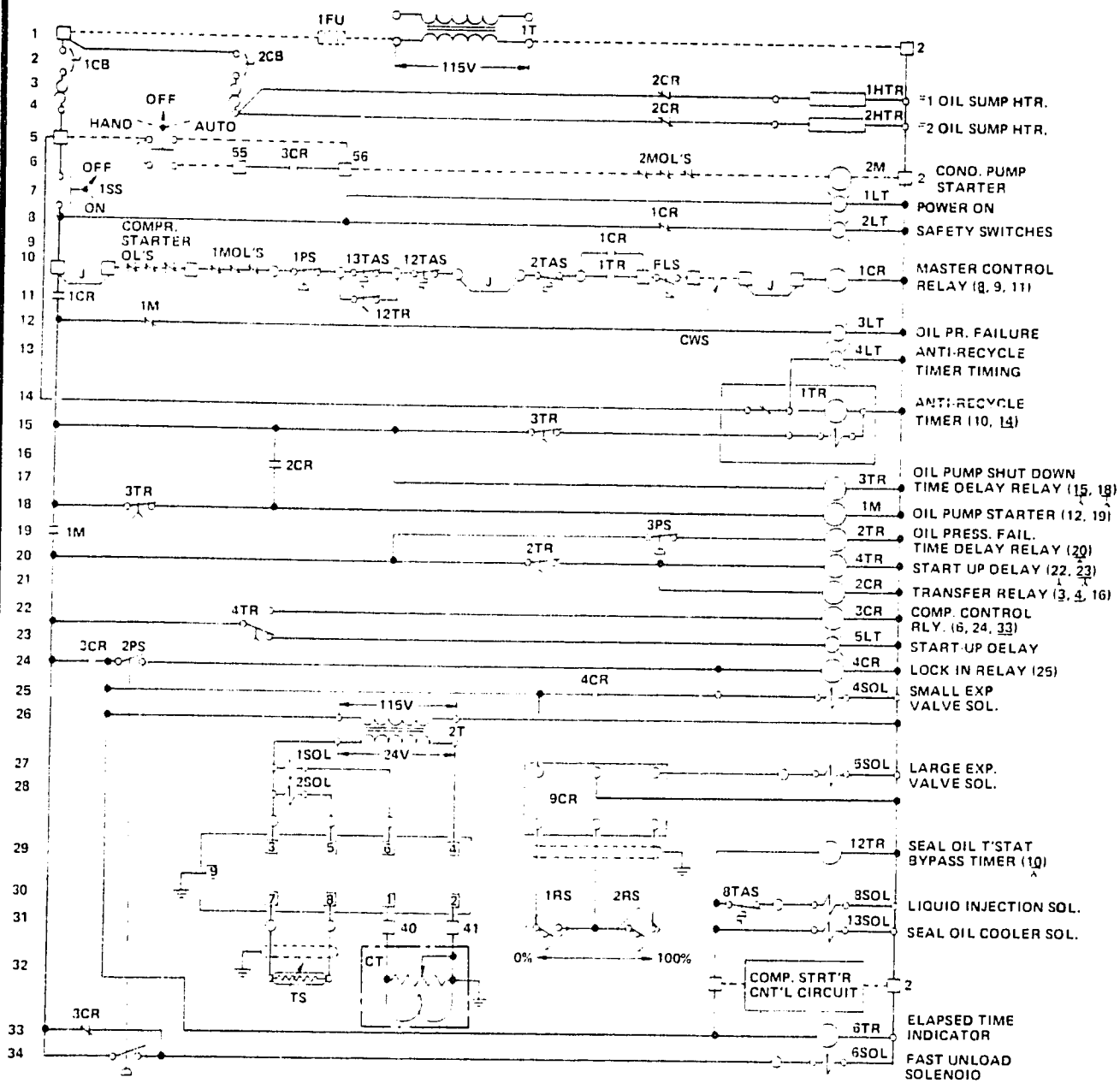

TYPICAL DIRECT DRIVE - FLOODED CHILLER

These diagrams are typical only. Consult the diagram accompanying the unit for control settings and wiring logic.

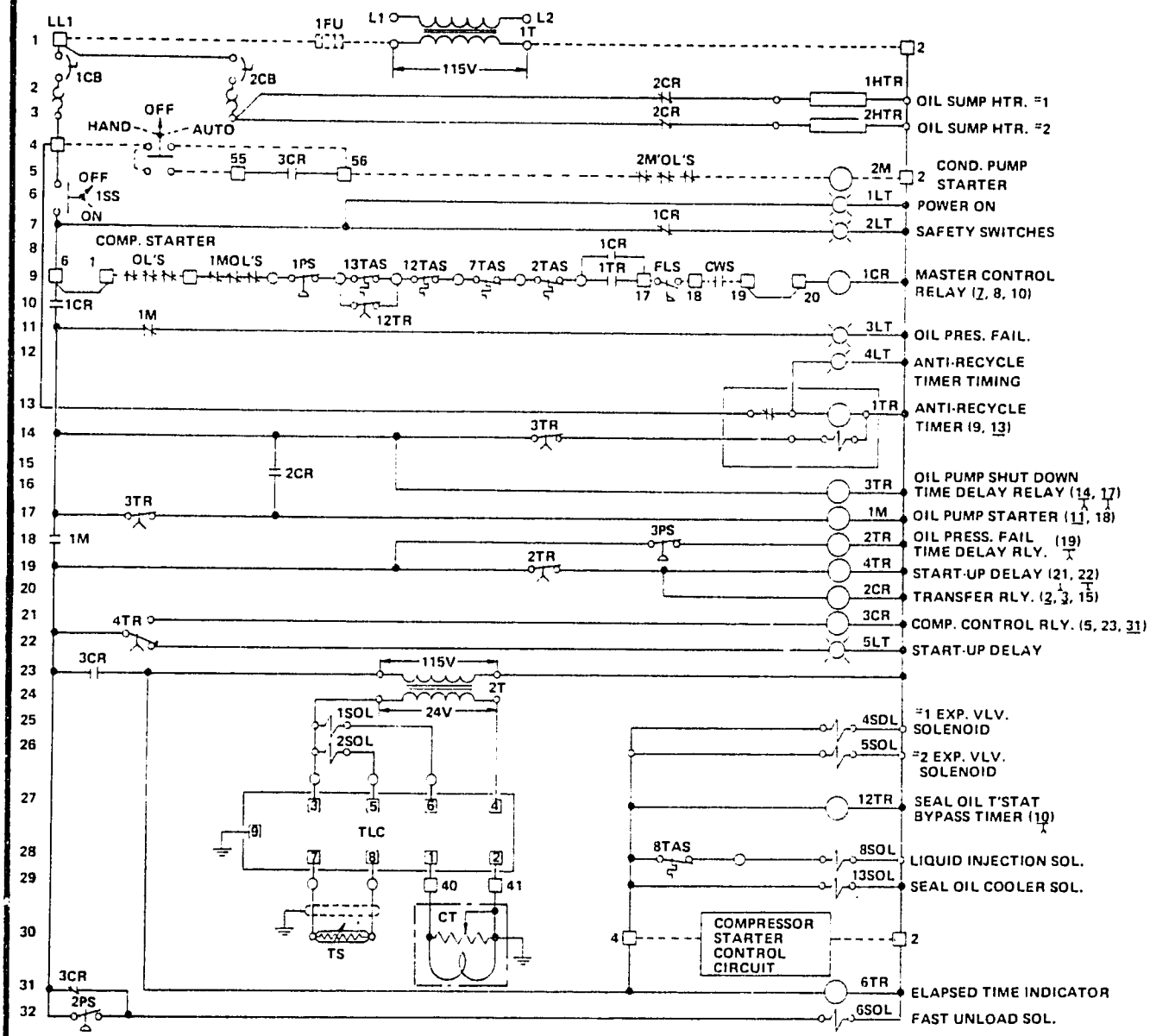

G. TYPICAL ELECTRICAL SCHEMATICS CONTINUED

TYPICAL DIRECT DRIVE - HEAT RECLAIM WITH DIRECT EXPANSION CHILLER

These diagrams are typical only. Consult the diagram accompanying the unit for control settings and wiring logic.

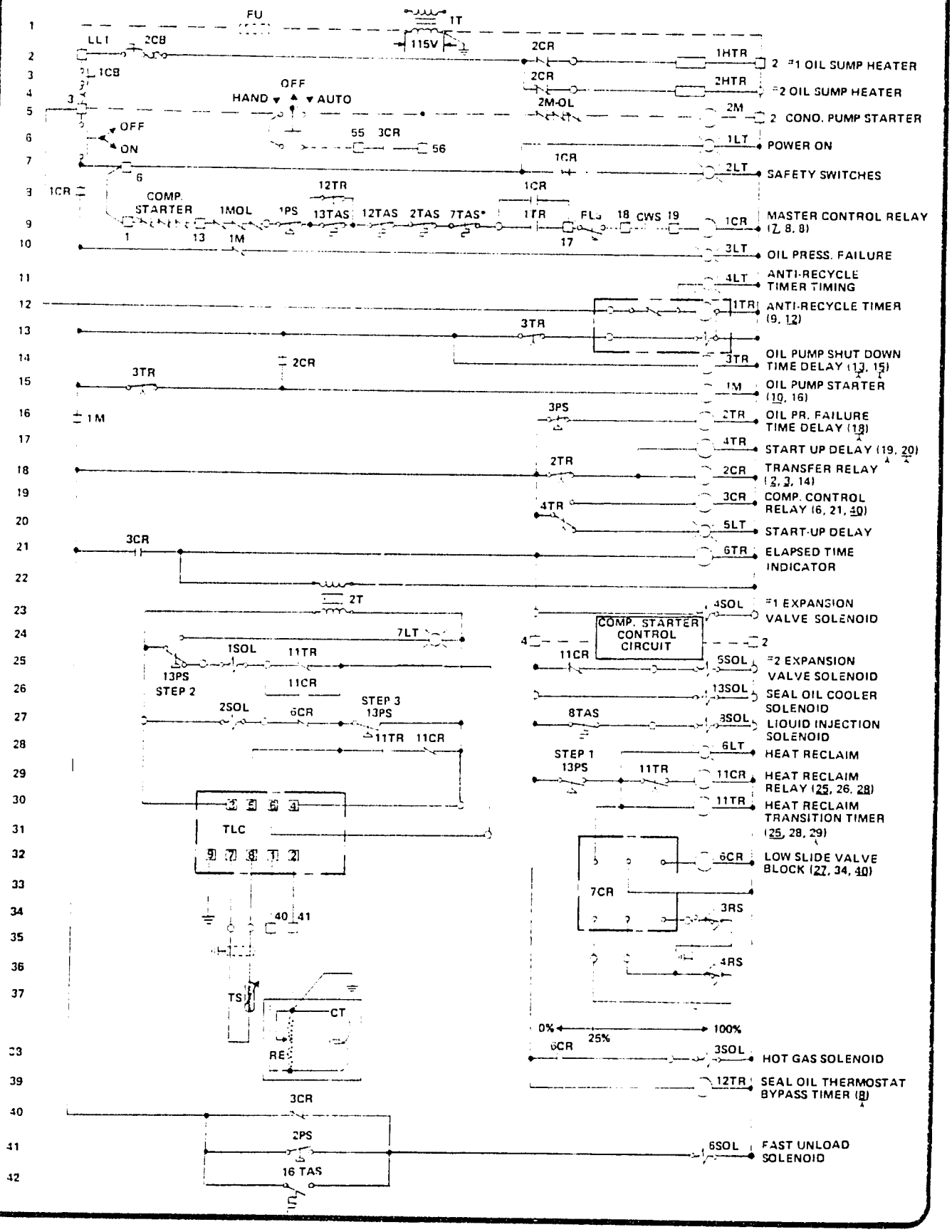

G. TYPICAL ELECTRICAL SCHEMATICS CONTINUED

TYPICAL DIRECT DRIVE - HEAT RECLAIM WITH FLOODED CHILLER

These diagrams are typical only. Consult the diagram accompanying the unit for control settings and wiring logic.

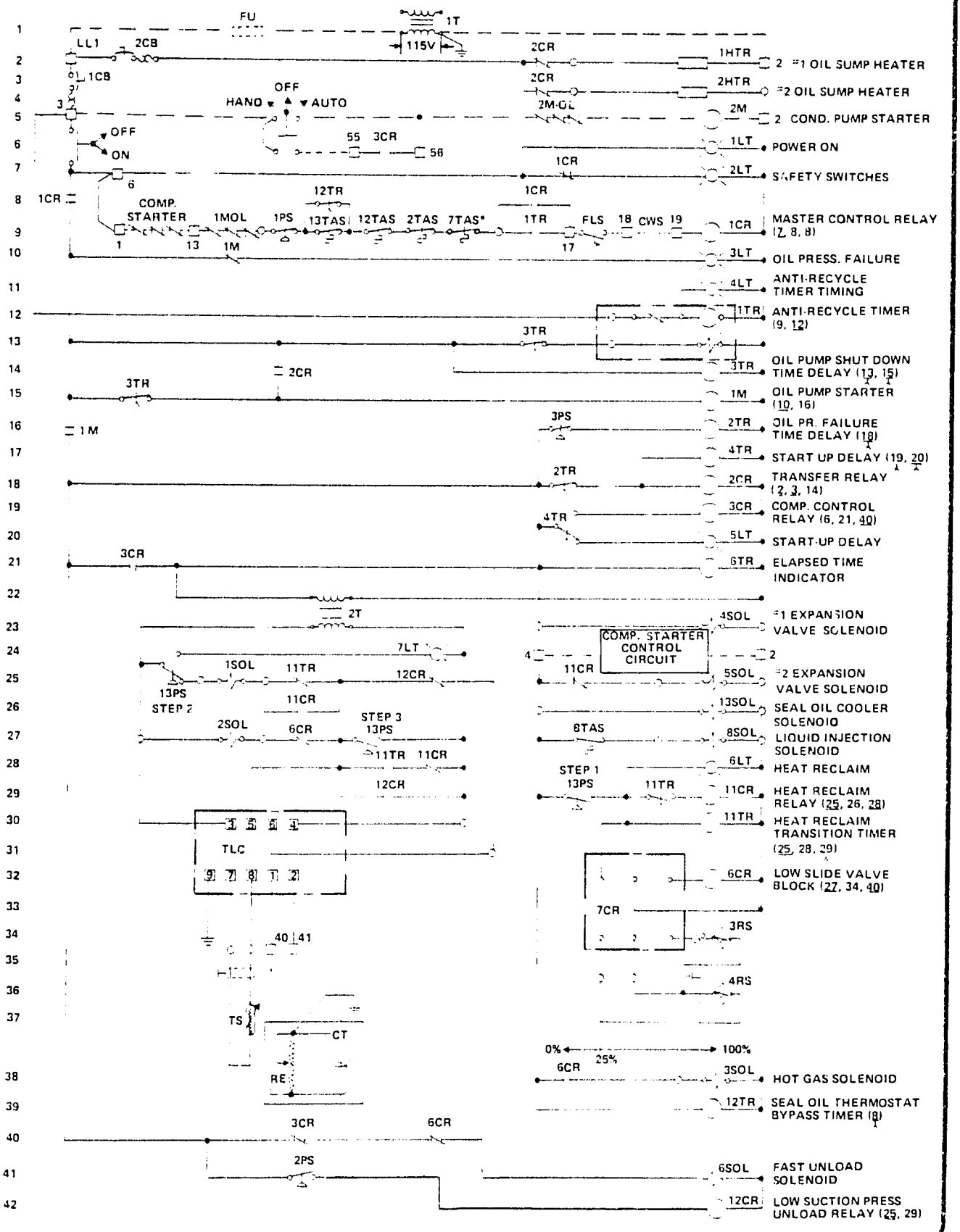

IV. MAINTENANCE

A. GENERAL

Maintenance personnel should become thoroughly familiar with the unit and the contents of this manual in order to properly diagnose and rapidly correct and prevent minor difficulties. Routine or periodic maintenance should be followed to insure a comprehensive preventative maintenance program minimizing costly repairs. National Service Bulletins as referenced in this section, may be obtained from Dunham-Bush, West Hartford, Connecticut, 06110, National Service Department.

CAUTION: All valve caps, packing glands and pipe plugs must be tightened securely after performing maintenance and/or periodically, to prevent refrigerant leakage.

WARNING: All inspection, maintenance, or repairs should be done by an authorized, qualified, Dunham-Bush, Inc., Service Representative as listed in the latest edition of Form No. 9822. Failure to comply may jeopardize the warranty.

B. PERIODIC MAINTENANCE

1. PRE-INITIAL START-UP MAINTENANCE

a. Insure unit is level.

b. Check for any piping stresses on unit.

c. Check coupling alignment. (Direct drive compressor and oil pump motors)

d. Tighten all wiring connections.

e. Check tripping of safety controls for grounding. (See Typical System Tests Section)

f. Check compressor housing heaters and oil sump heaters for proper operation.

g. Check all control and starter wiring connections for grounding.

h. Sump oil level must be visible in sump sight glass, sump oil temperature must be at a minimum of 100°F (37.8°C).

j. Hydronic system must be vented free from entrapped air, and the piping properly supported to the unit.

k. All satellite equipment and associated control devices must be operationally checked and capable of handling their design capacities.

m. Inspect for external refrigerant leaks with an electronic leak tester or halide torch.

n. Perform "insulation resistance test" and record temperature and meg ohm readings. Consult National Service Bulletin SR112 for additional information.

p. Check refrigerant indicators for evidence of moisture.

NOTE: If moisture is evident prior to initial start-up, the refrigerant indicators should be monitored after start-up to insure that the moisture is removed. If moisture is evident after minimal running time, the unit must be shut-down and the filter drier elements replaced. (See Component Maintenance Section)

r. Adjust limit switches.

2. POST INITIAL START-UP AND DAILY MAINTENANCE

NOTE: A log of daily readings should be maintained. (Refer to Maintenance Records Section)

a. Check suction superheat conditions after start-up for proper adjustment at thermal expansion valve. (Refer to Component Maintenance Section)

b. Inspect sight glasses for the following:

- Liquid Line, Inlet Side of Pilot Valve - Inspect for a full glass free from bubbles.
- Condenser Sight Glass (if equipped) - Inspect level to be visible.
- Liquid Injection Line Sight Glass (if equipped - Sight glass (downstream of solenoid) will be nearly empty if liquid injection solenoid is off. Sight glass will be full of liquid refrigerant, (if located upstream of TX valve) or flashing refrigerant (if located downstream of TX valve).

c. Check and record the following:

- Suction, discharge and oil pressures.
- Condenser inlet and outlet water temperatures.
- Chiller inlet and outlet cooling medium temperatures.
- Compressor motor amps.
- Oil Temperature.
- Compressor motor voltage.
- Discharge Temperature

d. Initial seal drainage collection (direct drive compressor) can be 0.31 cubic inches per hour (5 cc per hour) after start-up. After the unit has run a seven day break-in period, the normal seal drainage is 0.06 to 0.24 cubic inches per hour (1 cc to 4 cc per hour).

e. Check evaporator oil return (if equipped) to be at liquid level. (Refer to Component Maintenance Section)

f. Rotate capacity control hot gas bypass (optional) throttling valve to proper adjustment after initial start-up.(Refer to Sub-System Maintenance Section)

g. Check refrigerant indicators for evidence of moisture. Change filter drier elements if required. (Refer to Component Maintenance Section)

3. 1000 HR. (MONTHLY) INTERVAL MAINTENANCE

NOTE: A log of 1,000 hour readings should be maintained, and the data compared to daily values for evidence of operational changes, i.e. condensing pressure, superheat temperatures, compressor/oil pump motor current amps, etc. (refer to maintenance records).

B. PERIODIC MAINTENANCE CONTINUED

3. 1,000 HR. INTERVAL MAINTENANCE - CONT.

a. Check oil sump sight glass to be at proper level.

b. Check oil filter pressure drop and replace filter elements if necessary. A clean filter will have 1 to 2 psid (6.9 to 13.8 kPa). The oil filter should be changed at 6 psid (41.4 kPa) pressure drop across the filter.

c. Check gages and controls for proper operation and calibration.

d. For other than water chiller applications, field test chiller cooling medium for proper freeze point. (Brine applications, check pH)

e. Inspect all motor starter control relay contacts for arcing and replace if required. Check thermal switch heaters and starter linkages for proper operation.

f. Check compressor and oil sump heaters for proper operation.

g. Check and record the following additional items:

- Oil temperature at manifold
- Oil pump motor current
- Oil pump motor voltage
- Suction superheat
- Discharge superheat
- Chiller and condenser pressure drop

h. Check filter drier pressure drop (Maximum operational pressure drop across filter is 5 psid (34.5 kPa)

j. Check unloaders for proper loading and unloading speed. For a full stroke a maximum of two (2) minutes should elapse.

k. Check all sub-systems for proper operation, i.e. seal oil cooler, evaporator oil return, vapor injection, liquid injection, water cooled oil cooler. (Refer to Oil Cooling System Maintenance Section and Sub-System Maintenance Section)

m. Check condenser water regulating valve(s) for proper adjustment.

4. 3,000 HOUR INTERVAL MAINTENANCE

a. Check coupling alignment (direct drive compressors, oil pump).

b. Field test oil for acidity. Take action if required. Low temperature and heat reclaim require professional analysis at 3,000 interval. Refer to National Service Bulletin SR96.

NOTE: PH factor and total acid number (TAN) are highly responsive to moisture.

c. Perform "insulation resistance test" (Hermetic compressor, oil pump motors) and record meg ohm and temperature readings (refer to test procedures).

5. ANNUAL MAINTENANCE

a. Send sample of oil to laboratory for thorough analysis. Records of the analyses will provide a continuous case history, and insight, as to what system components have contributed to the quality of the oil. Refer to National Service Bulletin SR96 for analyses information. Change oil if required.

b. Send sample of chiller medium and condenser water to laboratory for analysis. This will provide insight as to what maintenance may be performed to prevent corrosive chemical activities. (See component maintenance)

c. Send sample of refrigerant to manufacturer for professional analysis of contamination. Water content should not exceed 20 PPM.

d. Check, recalibrate operating and safety controls. Design settings are noted on the particular job wiring diagram. (See system tests)

e. Inspect and clean all satellite equipment per manufacturer's recommendations.

f. Check compressor seal for refrigerant and excessive oil leakage. If a maintenance action is necessary, refer to the latest edition of the DBX Compressor Manual 6136. If necessary, an update to the latest seal design is recommended.

g. Check compressor thrust bearings by loosening coupling center and checking male rotor for axial float. If axial float exists, refer to Compressor Service Manual 6136 for thrust bearing service/replacement.

h. Insure compressor coupling is aligned.

j. Lubricate compressor motor (direct drive) per manufacturer's recommendations.

k. Perform "insulation resistance test" (Hermetic compressor/oil pump motors)

m. Remove condenser heads, and have tubes inspected for corrosion by a professional agency. Clean condenser and heat exchanger(s) as outlined in this manual. Failure to comply may result in system problems. Plug or replace tubes if required.

n. Check, re-adjust oil pump end clearance. Align oil pump motor coupling (direct drive oil pump).

6. 25,000 HOUR MAINTENANCE

a. Perform annual maintenance.

b. Replace compressor shaft seal with latest version.

c. Inspect/replace compressor unloader, injection tube, and slipper seal parts if abnormal operation exists.

d. Inspect/replace compressor unloader guide block if wear is evident. Check slide valve guide and spindle snap rings for security.

e. Check compressor balance piston/sleeve clearance. Replace if beyond limits or if there has been any changes in unit oil pressure.

f. Check rotors for radial and lateral movement. If movement is beyond pre-selected limits, take appropriate action or consult National Service.

g. Hermetic Motor

- Meg motor and compare with previous readings.
- Replace motor terminal bushings with latest design bushings if not previously updated. Remeg motor after reassembly and record.

7. 50,000 HOUR MAINTENANCE

a. Repeat 25,000 hour maintenance.

b. Replace thrust bearing.

c. Hermetic motor inspection.

- Meg motor and compare with previous readings.

B. PERIODIC MAINTENANCE CONTINUED

- Have motor service engineer inspect motor. If any significant deterioration of epoxy, lashings, or insulation exists, arrange to have motor repaired by approved motor service company. Remeg motor after reassembly and record.

- Inspect hermetic motor bearings and thrust washers for abnormal wear.

8. 75,000 HOUR MAINTENANCE

A major disassembly and inspection of the compressor is to be made. The compressor condition will determine if it should be field rebuilt or scheduled for a factory exchange rebuild.

9. SEASONAL SHUT-DOWN MAINTENANCE

a. Shut down PCX Unit in normal manner and partially pumpdown system.
b. Perform annual maintenance.
c. If unit is located where ambient temperature will be below freezing, drain all water thoroughly and blow out tubes (flooded chiller) or vessel (direct expansion chiller) with compressed air.
NOTE: Simply draining is not sufficient.
d. Open disconnect switches.
e. Run the oil pump periodically to fill the pump seal cavity with oil. This will prevent refrigerant from leaking. (Direct Drive Units)

C. MAINTENANCE RECORDS

1. LOGS

It is recommended that permanent daily records of system operating conditions be recorded at least once a day. The records should be retained as they are invaluable in determining patterns of operational change that will indicate the need for maintenance or service. System design conditions are established by the readings entered when the unit is first installed. Dunham-Bush, Inc., Form No. 9181 Log Sheet (See Appendix A), will serve this function admirably.

NOTE: In addition to the Daily/Monthly Log sheets, annual and seasonal maintenance is required. (See Periodic Maintenance Section)

The locations on the unit from which data may be obtained are shown in Figures 18 thru 22 for a typical unit.

The log sheets should be reviewed and evaluated periodically to determine operational trends.

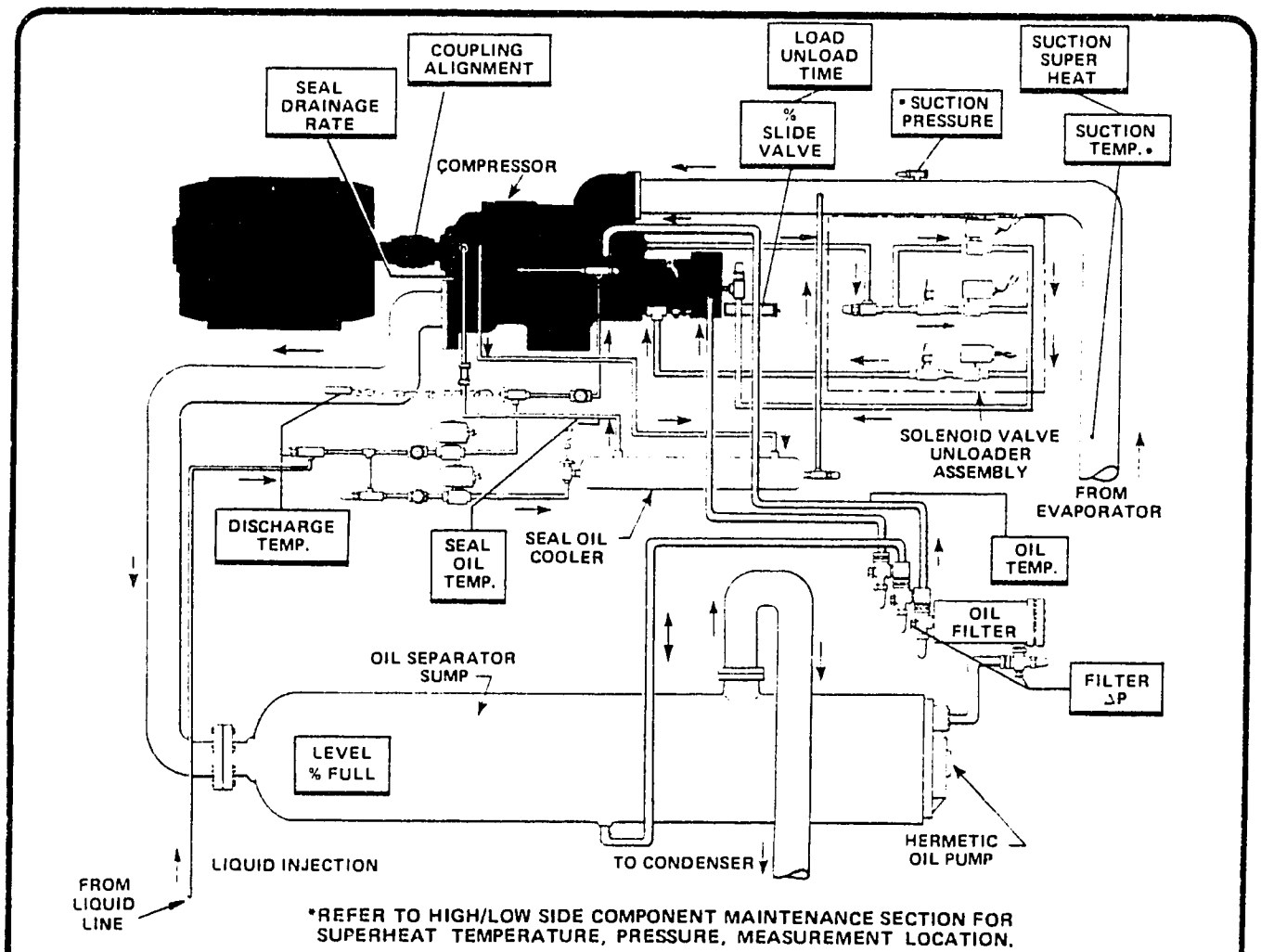

FIG. 18 TYPICAL DIRECT DRIVE COMPRESSOR WITH INTEGRAL SEPARATOR SUMP AND HERMETIC OIL PUMP

C. MAINTENANCE RECORDS CONTINUED

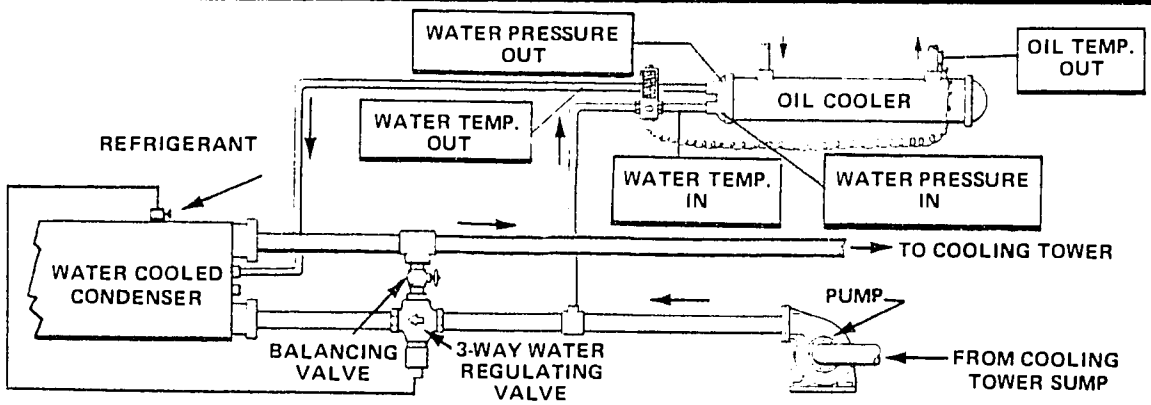

FIG. 19 TYPICAL WATER COOLED OIL COOLER (LOW TEMPERATURE APPLICATIONS)

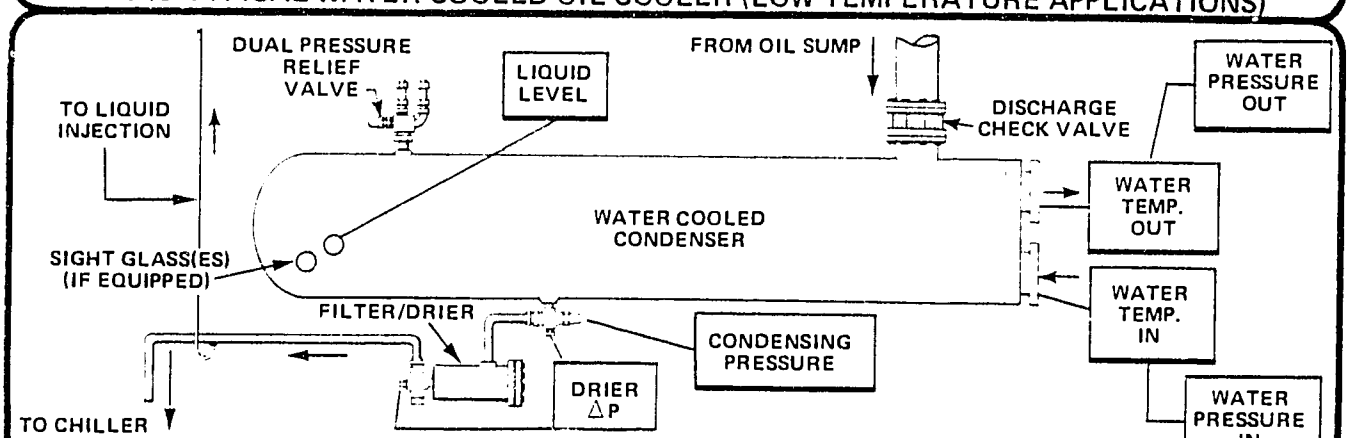

FIG. 20 TYPICAL SINGLE BUNDLE WATER COOLED CONDENSER

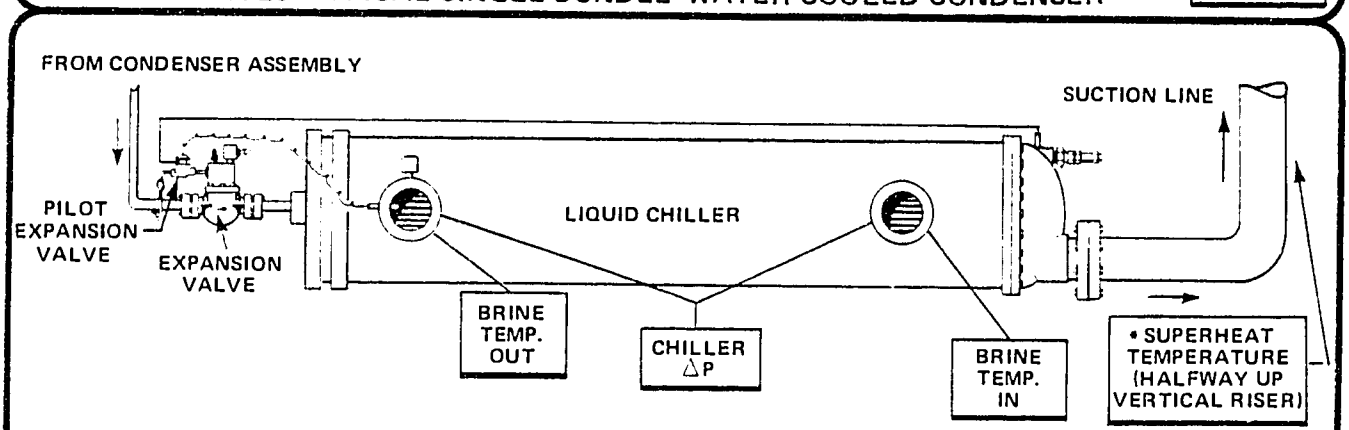

FIG. 21 TYPICAL DIRECT EXPANSION CHILLER

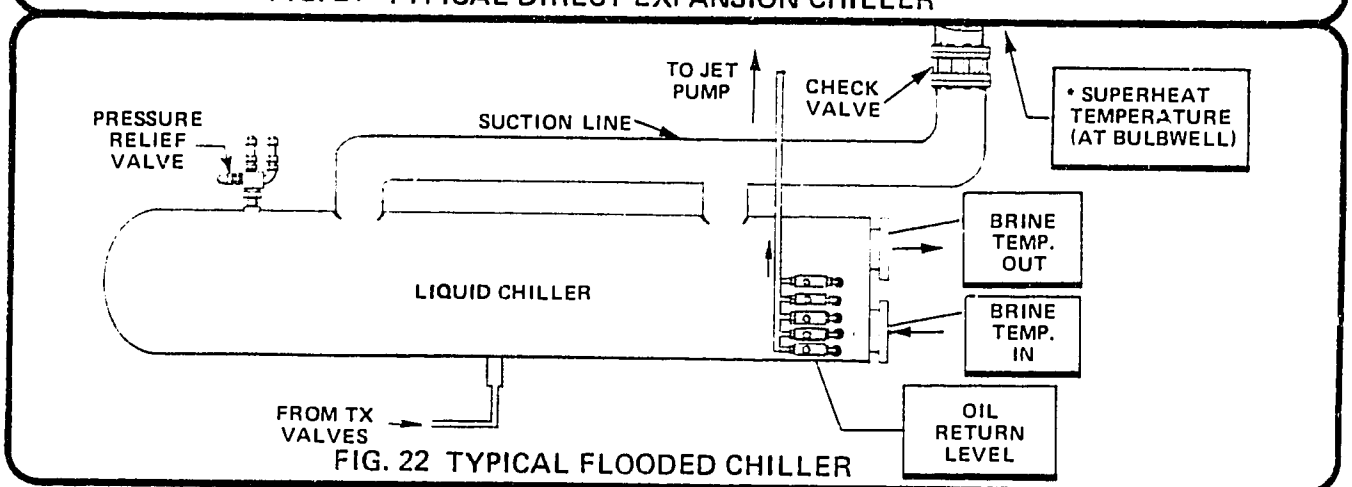

FIG. 22 TYPICAL FLOODED CHILLER

*REFER TO HIGH/LOW SIDE COMPONENT MAINTENANCE SECTION FOR SUPERHEAT TEMPERATURE, PRESSURE, MEASUREMENT LOCATION.

IV. MAINTENANCE

D. OIL REMOVAL/ADDITION

1. RECOMMENDED OILS

Dunham-Bush uses only two viscosity classifications; 150 SUS (Sayholt Universal Seconds) measured at 100°F for low temperature applications and 300 SUS measured at 100°F for high and commercial temperature applications. All other oil viscosities are not approved for use in Dunham-Bush compressors.

NOTE: Mixing of oil is not recommended. Oil should be thoroughly drained and replaced when changing oil brands. Consult factory for any other oil types.

The following Napthenic base oils are recommended.

	SST*	
	Low Temp.	Commercial or High Temp.
	(-40°F to 0°F) (-40°C to -17.8°C)	(+1°F to +50°F) (-17.2°C to +10°C)
COMPANY †	150 SUS (31.8 Cst)	300 SUS (64.6 Cst)
Sun Oil Company	Suniso 3GS	Suniso 4GS
Texaco	Capella B	Capella D

*Saturated Suction Temperature

†These oils are subject to periodic change. Consult the latest edition of National Service Bulletin SR42.

2. APPROXIMATE OIL CHARGES FOR STANDARD PACKAGES

NOTE: Packages with non-standard vessel selections may have different oil charges. The oil capacities listed are for purchasing purposes only. Refer to Oil Replenishment Section for proper oil level.

	APPROXIMATE OIL CHARGE					
	Hermetic		Direct Drive		Direct Drive Heat Reclaim	
Model PCX -	U.S. Gallons	Liters	U.S. Gallons	Liters	U.S. Gallons	Liters
120	26	98.4	21	79.5	24	90.8
150	26	98.4	21	79.5	24	90.8
180	26	98.4	21	79.5	24	90.8
230	27	102.2	24	90.8	28	106.0
290	27	102.2	24	90.8	28	106.0
350	27	102.2	24	90.8	28	106.0
400	30	113.6	35	132.5	-	-
450	-	-	44	166.5	-	-
500	-	-	44	166.5	-	-
580	-	-	45	170.3	-	-
630	-	-	45	170.3	-	-
700	-	-	46	174.1	-	-
750	-	-	47	177.9	-	-

3. OIL REMOVAL

NOTE: If oil from sump has been tested and evaluated to be re-usable, ensure that the container is clean and can be properly sealed to prevent entry of contaminants.

SP-1 *(Oil Removal)*

1. Attach hose between oil sump drain valve and a clean, vented, 55 gallon (200 liters) drum.

2. Drain oil slowly until oil ceases to flow. Oil will foam up.

3. Change oil filter(s) (Refer to SP-17)

4. OIL REPLENISHMENT

NOTE: It is desirable to coordinate oil addition with system evacuation so that oil can be drawn in utilizing the partial vacuum. Oil should be drawn into the oil sump during the final stages of evacuation. (Refer to Evacuation/Dehydration Procedures)*(SP-7 thru SP-12)*

SP-2 *(Oil Replenishment, Partial Vacuum Method)*

1. Connect a service hose to the oil sump drain valve and to a vented container of new or re-usable oil.

CAUTION: Hose should be purged with oil and care must be exercised not to incorporate air into the system.

2. Charge sump until oil level in sump is 1/3 to 1/2 of the (top) sight glass. Continue evacuation procedures.

SP-3 *(Oil Replenishment Portable Pump Method)*

CAUTION: For adding oil to a system under pressure, the portable pump should have a design working pressure of 150 to 200 PSIA, (1034.2 to 1379 kPa), and a capability to pump to 150 PSI (1034.2 kPa) from atmospheric pressure. Recommended capacity is 2 to 3 GPM (76 to 114 liters/min.)

NOTE: To facilitate sight glass inspection, a flashlight may be used.

1. With unit off and oil at normal temperature (100°F to 150°F), (37.8°C to 65.6°C), inspect for proper oil level to be at 1/3 to 1/2 of the (top) sight glass; normal level will vary from 1/2 full to just visible at the bottom of the glass.

2. Connect an adequately sized portable oil pump to oil sump drain valve, add oil from vented drum and insure absolutely no air enters the system.

3. Stop pump and close shut off valve when oil level in sump reaches 1/3 to 1/2 of (top) sight glass.

4. Disconnect pump and start-up PCX unit. If oil fails to return to sump causing shutdown due to loss of oil pressure, add additional oil and restart unit.

CAUTION: Do not overcharge system. System problems could result. Added oil must be removed once oil charge is returned to sump.

5. Shut down unit and observe sight glass after unit has stabilized. Drain off excess oil slowly.

IV. MAINTENANCE

E. TRANSFERRING/EVACUATING/CHARGING REFRIG.

CAUTION: All charging/evacuating procedures must only be performed by qualified commercial and industrial refrigeration personnel.

1. CHARGING/EVACUATING STATIONS

Adequate accessibility is provided on all packaged units for charging and evacuating. Careful consideration of the refrigerant state or quality must be employed before opening the valve for charging and evacuating procedures. Access may be obtained to the high and low side through:

- Dual pressure relief valve(s)
- Service shut-off valves (King, Queen Valve)
- Charging valves

CAUTION: Valve caps must be tightened when replacing to prevent refrigerant leakage.

1a. Dual Pressure Relief Valve

Vessels equipped with dual pressure relief valves enable service personnel to obtain access to the refrigerant vapor portion of the chiller or condenser.

FIG. 23 DUAL PRESSURE RELIEF VALVE

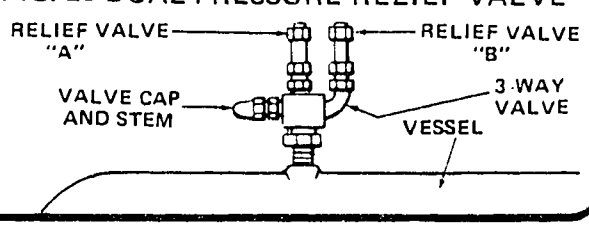

SP-4 *(Relief Valve Access)*

1. Isolate relief valve 'B' by closing off the three way valve stem clockwise until it seats. (See Figure 23)

2. Remove relief valve 'B'.

3. Install a charging hose adaptor in place of the removed relief valve.(adapter not supplied)

4. Connect one end of the hose to the adaptor insuring the hose is purged with refrigerant.

5. Return 3 way valve to original position and follow charging evacuating procedures.

1b. Service Valves

Service valves are located at the filter drier outlet (Queen Valve), and condenser outlet (King Valve) and may be used to obtain access for charging or transferring liquid refrigerant, and evacuating procedures.

SP-5 *(Service Valve Access)*

1. Backseat the valve to isolate plug tap from system.

2. Remove appropriate plug and attach hose.

3. Re-position valve stem and follow Charging/Evacuating Procedures as outlined in this manual

4. Backseat the valve and plug taps.

1c. Charging/Evacuating Valves

Units are equipped with charging valves located either on the suction line or directly on the compressor housing, as noted on the unit piping schematic.

SP-6 *(Charging Valve Access)*

1. Attach hose and purge by opening manual valve.

2 Follow Charging/Evacuating Procedures as outlined in this manual.

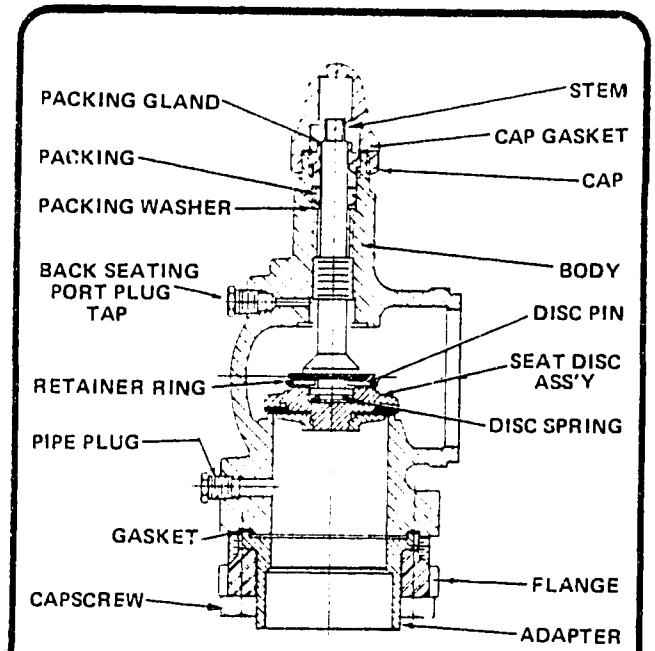

FIG. 24 TYPICAL SERVICE VALVE

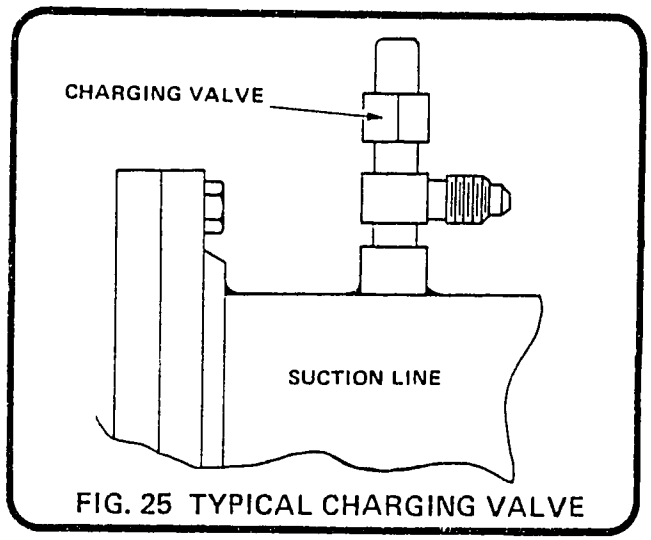

FIG. 25 TYPICAL CHARGING VALVE

2. TRANSFER (PUMPDOWN) OF REFRIGERANT TO CONDENSER OR EXTERNAL CONTAINERS

Most service work can be executed by isolating the component to be repaired, from the system. However, it may be required to pump and temporarily store the refrigerant in the condenser, or remove the charge completely. How the refrigerant is handled, is dependent upon equipment, time available, and the type of maintenance performed. The succeeding procedures SP-7 thru SP-11 must be executed in the order presented. The following must be adhered to for all transfer procedures:

CAUTION: Continuously weigh receiving container to be certain it is not filled more than 85% of its volumetric capacity to allow for thermal expansion.

NOTE: When removing refrigerant to external containers, it is recommended to pack the containers in dry ice.

2a. Partially Pumpdown System

Partially pumping down the system serves to transfer most of the refrigerant from the chiller to the condenser.

> CAUTION: Safety controls are not to be defeated or re-adjusted during pumpdown. Compressor motor starts are limited to 3 starts per hour.

SP-7 *(Partial Pumpdown)*

1. With the unit operating, and a partial load available, set the slide valve at minimum load position. Close the condenser shut-off valve (King Valve). If hot gas bypass is installed, close hot gas bypass manual valve recording number of turns.

2. After unit shuts down due to low pressure cut-out, restart unit after 20 minutes elapsed.

3. Unit will cycle off again on low pressure cut-out. The unit is now partially pumped down.

2b. Transfer Liquid Refrigerant From Chiller To Condenser or Containers (Flooded Type Chiller)

The remaining liquid refrigerant and residual oil must be transferred out of the chiller barrel before the gas is transferred.

> CAUTION: The chiller pressure must not go below the corresponding freezing point of water, or the brine being used. Approximately 65 to 75 psig (R-22) (448.2 to 517.1 kPa), should be maintained inside the vessel, until it is certain all liquid refrigerant has evaporated. Rapid removal of refrigerant will cause the chiller tubes to freeze and the possibility of bursting them exists. Rapidly boiling refrigerant also foams up the oil, which can freeze lower tubes.

NOTE: It may be helpful to monitor shell temperature beneath the chiller with a thermocouple. Another precaution (flooded chiller models) to avoid freezing is to remove the heads of the chiller and have the tubes fully blown out with compressed air, prior to refrigerant removal.

SP-8 *(Liquid Transfer, Flooded Chiller)*

1. Remove oil (refer to SP-1).

2. Connect a hose to the liquid connection at the bottom of the chiller vessel. Attach in line, a strainer, liquid refrigerant pump, and a sight glass.

3. Purge hose, and connect to the receiver (i.e. condenser, containers). Commence draining, maintaining pressure as much as possible until all the liquid is removed.

2c. Transfer Gas Refrigerant From Chiller To Condenser or Containers

SP-9 *(Gas Transfer From Chiller)*

1. Manually unseat the main expansion valve(s) and open hot gas bypass (if equipped) recording number of turns.

2. Connect the suction side of a portable condensing unit to the low (vapor) side of the system. Connect the discharge hose to the condenser vessel through the dual pressure relief valve (see SP-4) or to an external container.

3. Commence removal of the refrigerant until the suction pressure (chiller pressure) is slightly above atmospheric pressure.

2d. Transfer Liquid Refrigerant from Condenser to External Containers

SP-10 *(Transfer Liquid Refrigerant from Condenser)*

1. Connect a hose to the service valve at the condenser outlet. (See SP-5) Attach an in-line strainer, refrigerant pump and sight glass. Purge line and attach to a clean empty refrigerant container which is marked with the correct type of refrigerant.

2. Commence draining until the first cylinder is 85% full.

3. Remove container and repeat until all liquid refrigerant is removed, without dropping pressure below the corresponding freezing temperature of water.

2e. Transfer Gas Refrigerant From Condenser to External Containers.

SP-11 *(Transfer Gas Refrigerant from Condenser)*

1. Connect the suction side of a portable condensing unit through the condenser relief valve access. (See SP-4) Connect the discharge hose of the portable condensing unit to an external container.

2. Commence removal of refrigerant gas until the condenser vessel pressure is slightly above atmospheric pressure.

3. COMPLETE SYSTEM EVACUATION AND DEHYDRATION

For a complete system evacuation, it will be necessary to make up a manifold and evacuate from three evacuating stations simultaneously.

NOTE: It is absolutely necessary to use a true micron gauge. An ordinary compound gauge is not acceptable.

SP-12 *(Evacuation/Dehydration)*

1. Drain oil (refer to SP-1).

2. Transfer refrigerant to external containers (refer to SP-7 thru SP-11)

3. Pressure test the unit with dry nitrogen and R-22 to insure no leaks exist. (Refer to SP-37)

4. With the unit at atmospheric pressure, connect a vacuum pump to the system. Manually unseat the main expansion valve(s) and open hot gas bypass valve (if equipped).

5. Evacuate to 1,000 microns and break vacuum with dry nitrogen and R-22.

6. Change filter drier elements. (Refer to SP-29).

E. TRANSFERRING/EVACUATING/CHARGING REFRIG.

System Evacuation - continued

NOTE: To achieve best results, warm water or warm air should be recirculated through the water side of the evaporator and condenser.

7. System must be dehydrated down to 1,000 micron level at least three times, initially leaving vacuum pump on system at least 12 hours. Break vacuum twice with dry nitrogen. On final pull down to 1,000 microns, or lower, system pressure must not rise above 2,000 microns in four hours with vacuum pump isolated from system.

8. Fill oil sump with clean oil after third pull down utilizing the partial vacuum to draw in the oil. (Refer to SP-2)

9. Turn on oil heaters upon completion of dehydration. Break vacuum with dry refrigerant vapor.

4. CHARGING THE REFRIGERANT SYSTEM

When charging a fully evacuated system, the unit must be 1) gas charged initially, 2) liquid charged to 90% of design charge capacity and 3) charged under operation to full design charge capacity, as noted on the nameplate located at the control panel.

4a. Initial Gas Charging the Refrigerant System

NOTE: This is the initial procedure for charging a fully evacuated system, with the oil at the proper level.

> CAUTION: Refrigerant gas must be charged until the internal system pressure corresponds to an evaporating temperature above freezing (R-22, 70 PSIG) (482.6 kPa), before liquid is charged. This will prevent freeze-up and bursting of tubes.

> CAUTION: Chiller and condenser water pumps must be running and must maintain a minimum of 50% water flow.

SP-13 *(Initial Gas Charging)*

1. Manually unseat the main thermal expansion valve(s)

2. Slowly gas charge (2 PSI/minute) (13.79 kPa/min) at:
   a. Condenser vessel
   b. Chiller vessel

3. Continue gas charging until the pressure is stable throughout the system at a safe level. (R-22: 70 PSIG 482.6 kPa).

4b. Liquid Charging the Refrigerant System

NOTE. This procedure is for charging a unit that has a system pressure above the corresponding freezing temperature of water. Liquid refrigerant can be charged directly into an evacuated system only if water is drained thoroughly and the tubes (flooded chiller) or the shell (direct expansion chiller) have been fully blown out with compressed air.

> CAUTION: Chiller and condenser water pumps must be running and must maintain a minimum of 50% water flow.

SP-14 (Liquid Charging the System)

1. Purge and connect a charging hose from refrigerant containers to the King valve (refer to SP-5).

2. Liquid charge condenser, exchanging containers until 90% of design charge is in the system. A liquid refrigerant pump may be employed. Insure a liquid seal exists in the liquid line to the thermal expansion valve(s) by observing the sight glass.

3. The remaining refrigerant must be charged while the system is operating (refer to SP-15).

4c. Adding to Refrigerant Charge

This procedure is used when an inadequate charge is suspected. Typical indications of an inadequate charge are bubbles in sight glasses (vaporized refrigerant), high suction pressure, high oil temperature, etc. Indications of an adequate charge at 100% load are:

- Discharge Superheat - Must maintain between 25°F (13.9°C) and 30°F (16.7°C) above saturated conditions.
- Refrigerant Quality - Moisture indicator sight glasses should be clear of bubbles when system is fully charged.
- Condenser Outlet Temperature (Subcooling) - System will maintain approximately 8°F to 10°F (4.4°C to 5.6°C) below saturated conditions when refrigerant charge is adequate.
- Oil Temperature (Water Cooled Oil Cooler, if equipped) - Oil temperature must be maintained at 110°F to 120°F (61.1°C to 66.7°C) entering compressor.
- Liquid Injection Feed (if equipped) - Liquid seal exists in feed line at sight glass.

  NOTE: It may be helpful to liquid charge the liquid injection line independently to initiate normal operation.

- Seal Oil Cooler Feed (Direct Drive Models) - Liquid seal exists in feed line entering cooler.

  NOTE: It may be helpful to liquid charge the feed line to the seal oil cooler independently to initiate normal operation.

SP-15 *(Adding to Refrigerant Charge)*

1. Manually set and hold compressor slide valve at 25% position using temperature load control (TLC) manual control selection switch.

> CAUTION: Partial cooling load must be available to manually position slide valve to prevent shut-down from safety controls.

2. Connect container of the design refrigerant to the low side of the system.

3. Start-up PCX unit, open drum, valve and gas charge system until above conditions are met.

IV. MAINTENANCE

F. COMPONENT MAINTENANCE

1. COMPRESSOR/MOTOR ASSEMBLY

1a. Compressor

All inspection, maintenance, or repairs of the compressor must be done by an authorized, qualified Dunham-Bush, Inc. Service Representative as listed in the latest edition of Form Number 9822. If the customer has any reason to suspect a problem, he should contact the Dunham-Bush Service Representative for assistance. Failure to comply may jeopardize the warranty. Repair information may be found in the latest edition of the DBX Compressor Service Manual, Form No. 6136.

1b. Compressor Motor

The primary maintenance required on the hermetic compressor motor is to perform an insulation resistance test at periodic intervals. A permanent record of the megger test will serve to show any approaching motor problems. (Refer to SP-36) Direct drive motors must be lubricated per manufacturer's specifications and periodic insulation resistance tests are also recommended.

1c. Coupling Alignment

Shafts become misaligned as a result of many natural and unavoidable causes. Heat, vibration, bearing wear, the settling of foundations, etc., all tend to alter alignment. Periodic checks of the compressor coupling is recommended.

NOTE: The coupling should be hot when making alignment adjustments. Also the motor should be aligned to the compressor.

SP-16 *(Compressor Coupling Alignment)*

1. To check angular misalignment (Figure B) mount indicator (as shown on left flange) with stem on face of right flange. Rotate Equipment noting maximum and minimum indicator reading. Move equipment as necessary to reduce the total indicator reading to that shown below.

2. To check parallel misalignment (Figure C) set indicator stem on outer surface of flange. Rotate equipment noting maximum and minimum indicator reading. Move equipment as necessary to reduce indicator reading to that shown below. Be careful not to disturb the setting of Step 1.

NOTE: If it is necessary to remove the motor alignment pins, the motor should be repinned after the alignment corrections are made.

3. Repeat Steps 1 and 2 as necessary.

4. Coupling hubs to be spaced to dimension C, as shown in the table below.

5. This coupling should be rotated several revolutions to make sure no "endwise creep" in connected shafts is measured.

6. Tighten all bolts as shown in chart below.

7. When operating at full speed,both laminated rings should have a distinct and clearly defined appearance - not blurred when viewed from top and side.

1d. Motor Housing Heaters (Hermetic Units)

No maintenance is required on compressor housing heaters, except for replacement, if the heater element should fail.The heater may be removed from the housing, or well without disturbing the charge. There are two types of compressor housing heaters. The housing mounted type (heater pad) which requires a temperature resistant epoxy for installation, and a well type (insertion) which requires no other agent for assembly. All electrical service connections must be disengaged prior to installation. Refer to the unit wiring diagram.

FIG. 25 - COUPLING ALIGNMENT

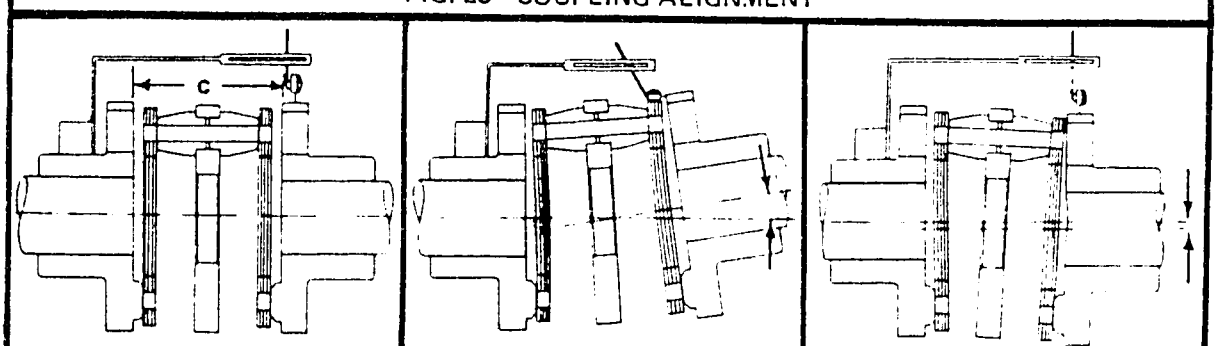

FIGURE 25A
COUPLING IN ALIGNMENT

FIGURE 25B
TEST FOR ANGULAR MISALIGNMENT

FIGURE 25C
TEST FOR PARALLEL MISALIGNMENT

THOMAS COUPLING SERIES	FORM-FLEX COUPLING SERIES	BOLT TORQUE				MISALIGNMENT (TIR)				DIMENSION C (SEE FIG. A)	
		THOMAS		FORM-FLEX		PARALLEL		ANGULAR			
		(Ft.-Lb.)	(kg-m)	(Ft.-Lb.)	(kg-m)	(In)	(mm)	(In)	(mm)	(In)	(cm)
163 DBZ-B	-	13	1.8	-	-	0.003	0.076	0.003	0.076	2 7/16	6.19
201 DBZ-B	-	25	3.5	-	-	0.005	0.127	0.005	0.127	2 15/16	7.46
226 DBZ-B	AK 30	43	6.0	40	5.5	0.005	0.127	0.005	0.127	3 13/16	9.68
263 DBZ-B	AK 35	63	8.7	40	5.5	0.007	0.178	0.007	0.178	4 9/16	11.0
301 DBZ-B	AK 40	95	13.1	80	11.1	0.007	0.178	0.007	0.178	4 7/8	12.38
351 DBZ-B	AK 45	175	24.2	80	11.1	0.007	0.178	0.007	0.178	5 7/8	14.90
350 - 51	-	95	13.1	-	-	0.007	0.178	0.007	0.178	6	15.24

1. Consult factory for complete engineering specification ASY-ES-1 , if additional information is required.
2. TIR = Total Indicator Reading.
3. Compressor alignment data is subject to periodic change. Consult latest National Service Bulletin SR-109.

2. OIL SYSTEM COMPONENT MAINTENANCE

2a. Oil Filter Replacement

The need for replacement of the oil filter may be determined by measuring the pressure drop across the filter (6 psid [41.4 kPa] maximum). The normal pressure drop with a new element is 1 to 2 psid (6.9 to 13.8 kPa). Some units are equipped with an indicator for ths purpose.

FIG. 26 HORIZONTAL TYPE OIL FILTER

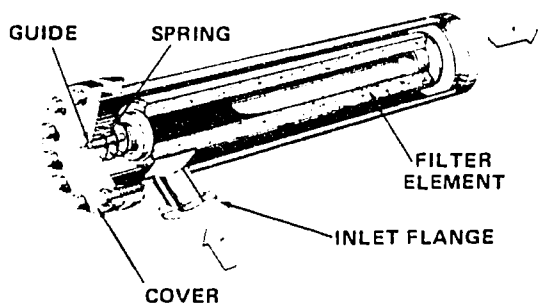

P-17 *(Oil Filter Replacement)*

1. With the unit off, close the oil filter service valves at the inlet and outlet sides of the oil filter assembly to be serviced.

2. Vent filter housing into a gallon (3.8 liters) container. Oil will foam up.

3. Remove cover (enclosure; vertical type), by evenly backing out the bolts.

NOTE: Do not cock cover (enclosure). Spring is in compression with the filter elements.

4. Remove filter element guide. Remove and inspect oil filter cartridge for metallic particles, babbitt or unusual amounts of dirt or sludge. Remove old gaskets (O-Ring).

5. Clean interior of oil filter housing with a lint free wiping cloth.

6. Inspect new oil filter element to ensure that the element is free from damage, and install new oil filter element. Ensure that the element is seated properly.

7. Install cover (enclosure) with new gasket or "O" Ring if necessary. Torque bolts evenly.

8. Purge oil filter thoroughly and open isolation shut off valves.

9. With unit operating, test for any leakage.

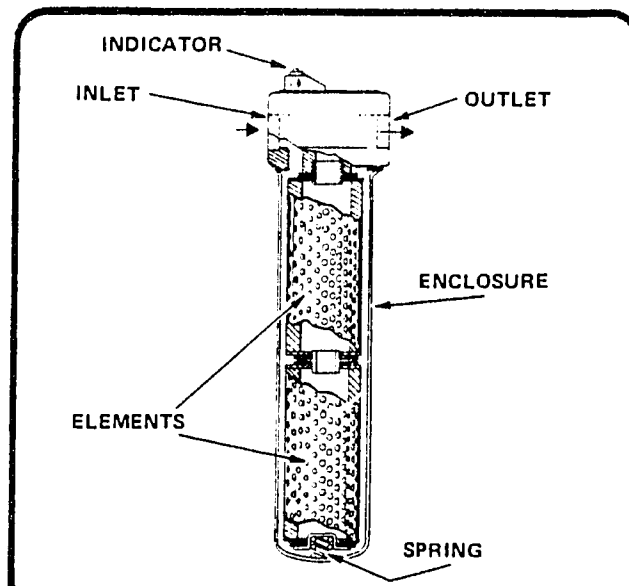

FIG. 27 VERTICAL TYPE OIL FILTER

2b. Oil Pump/Motor Assembly

The oil pump, whether direct drive or hermetically sealed are designed for long trouble free life, with a minimum of maintenance.

Hermetic pump applications require oil sump draining to obtain access to the pump assembly. External pumps may be serviced in-line. Anticipated maintenance for the pump assembly are:

- End Clearance Adjustment
- Motor coupling alignment (direct drive oil pump)
- Oil pump suction strainer cleaning

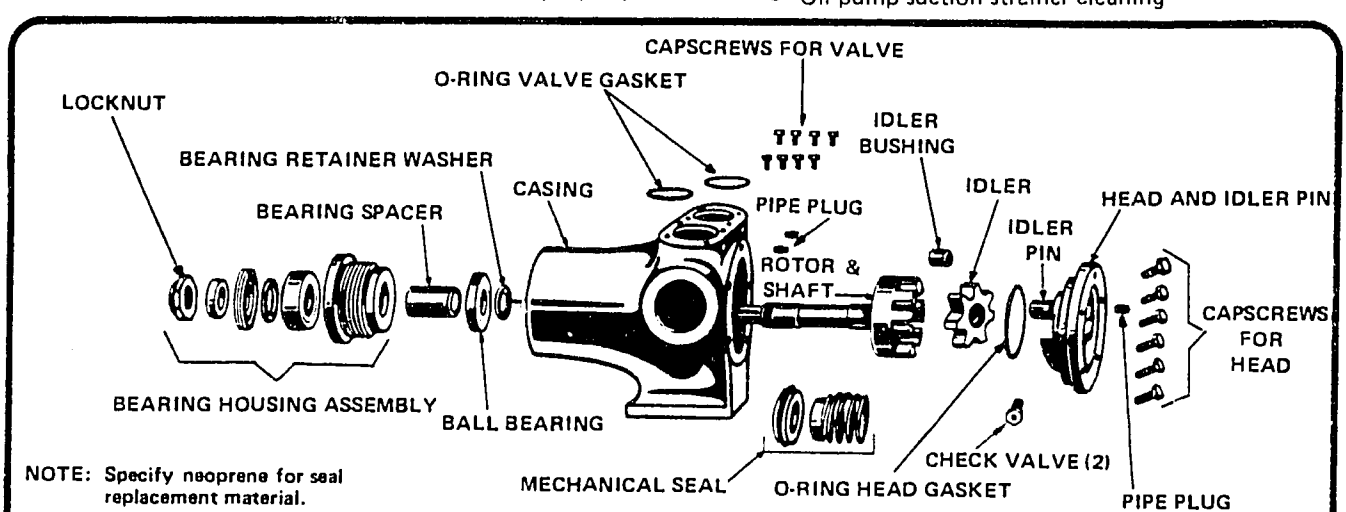

NOTE: Specify neoprene for seal replacement material.

FIG. 28 TYPICAL EXTERNAL TYPE OIL PUMP

F. COMPONENT MAINTENANCE CONTINUED

SP-18 *(Coupling Alignment, Direct Drive Oil Pump)*

1. *Disconnect electrical service*

2. *Check parallel alignment by placing a straight-edge across the two coupling flanges and measuring the maximum offset at various points around the periphery of the coupling. Do not rotate the coupling. If the maximum offset exceeds the figure shown under parallel, realign the coupling.*

3. *Check angular alignment with a micrometer or caliper. Measure from the outside of one flange to the outside of the other at intervals around the periphery of the coupling. Determine the maximum and minimum dimensions. Do not rotate the coupling, the difference between the maximum and minimum must not exceed the figure given under "angular". If a correction is necessary, be sure to recheck the parallel alignment.*

NOTE: For maximum life, keep misalignment values as near to zero as possible.

NET MAX. ALIGNMENT VALUES (EXTERNAL OIL PUMP)				
(Type N) Sleeve Size	Parallel		Angular	
	In.	cm	In.	cm
6	0.015	0.038	0.070	0.178
7	0.020	0.051	0.081	0.206
8	0.020	0.051	0.094	0.239
9	0.025	0.064	0.109	0.277

SP-19 *(End Clearance Adjustment, Direct Drive Oil Pump)*

1. *Disconnect electrical service to oil pump.*

2. *Loosen set screws on bearing housing.*

3. *Counterclockwise rotation of the bearing housing will increase end clearance. Two notches on the bearing housing represent approximately 0.003 in. (0.076mm).*

CAUTION: Be sure the shaft can be rotated freely and the set screws are tightened securely.

4. *Align coupling and reconnect electrical service.*

SP-20 *(Maintenance, Hermetic Oil Pump)*

1. *Partially pumpdown unit. (Refer to SP-7)*

2. *Drain oil from oil sump housing into 55 gallon (208.2 liters) container. (Refer to SP-1)*

3. *Disconnect all electrical connections and properly tag.*

4. *Attach a calibrated pressure gauge to both high and low side to determine if the check valve has properly seated.*

5. *With sump at atmospheric pressure, remove the oil pump assembly. With sump/separator assemblies, remove separator mesh and clean with R-11. Inspect for damage and wear. Replace if required.*

6. *Remove motor rotor, inspect rotor and stator for wear marks. Inspect bearings for wear. If any wearing is evident, repair/replace pump assembly.*

7. *If original pump assembly is to be replaced, check rotor end clearance and insure clearance is to 0.002 to 0.003 in. (0.051 to 0.076 mm).*

8. *Assemble new or cleaned oil pump strainer to pump assembly using the existing connector tube assembly and attaching hardware, install pump assembly and O-ring using lifting eye bolt. Care should be taken to prevent damaging pump strainer. Use of two guide pins to support pump on its flange will aid in assembly.*

9. *Reconnect piping and electrical connections. Fill oil sump (refer to SP-2 and SP-3).*

FIG. 29 TYPICAL HERMETIC TYPE OIL PUMP

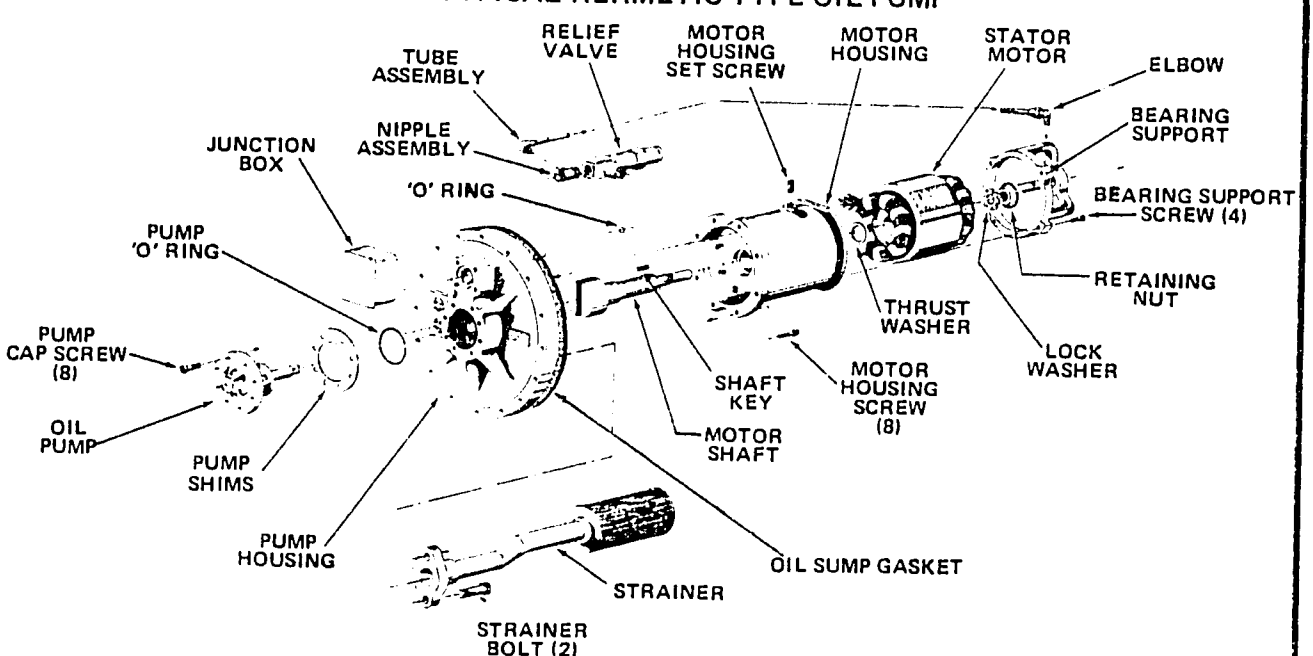

F. COMPONENT MAINTENANCE CONTINUED

2c. Oil Pressure Relief Valve

CAUTION: Problems seeming to require oil pressure relief valve adjustments can usually be traced to other items, such as plugged oil filters, worn pump, improper pump end clearance, a plugged or dirty seat, and/or a damaged seat.

- **Hermetic Type** - The hermetic type oil pressure relief valve is factory pre-set to crack open at 54 PSIG (372.3 kPa) pressure at the compressor, 100% load .

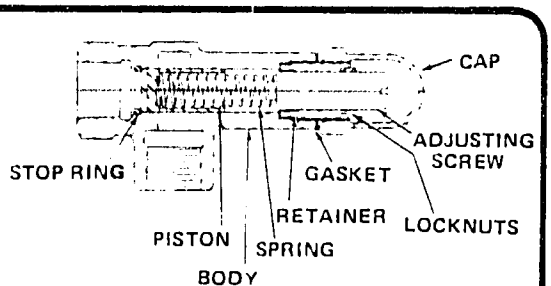

FIG. 30 TYPICAL HERMETICALLY LOCATED PRESSURE RELIEF VALVE

- **External Type** - The external type in-line oil pressure regulating valve is factory set to crack at 35 to 42 psig (241.3 to 289.6 kPa) (pressure at compressor, 100% load).

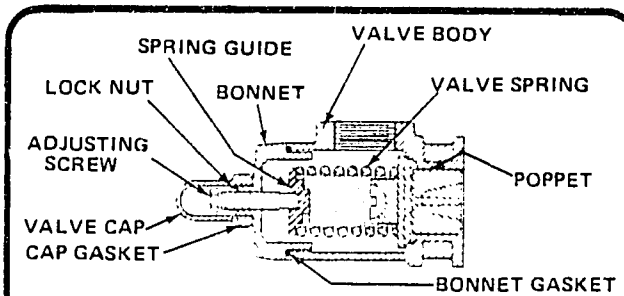

FIG. 31 TYPICAL EXTERNALLY LOCATED PRESSURE RELIEF VALVE

SP-21 *(Oil Pressure Relief Valve Adjustment)*

1. Remove the valve cap which covers the adjusting screw, and loosen the locknut(s), which locks the adjusting screw so the pressure setting will not change.

2. The adjusting screw should be turned in for increasing the pressure that the relief valve will open.

3. Adjust to design conditions.

SP-22 *(Oil Pressure Relief Valve Disassembly)*

1. Remove valve cap.

2. Measure and record length of extension of the adjusting screw.

3. Loosen the locknut(s) and back out adjusting screw until spring pressure is released.

4. Remove part components, clean and inspect for wear or damage. Repair or replace as necessary.

2d. Oil Sump Heaters

No maintenance is required on oil sump heaters, except for replacement, if the heater element should fail. The heater may be removed from its well without disturbing the oil or charge.

SP-23 *(Replacement of Oil Sump Heaters)*

1. With the power off, disconnect electrical cable and wiring.

2. Remove the oil sump heater element from the oil sump flange.

3. Install new oil sump heater element to the oil sump well.

4. Reconnect wiring and electrical cable.

2e. Evaporator Oil Return (Flooded Chiller, Low Temp. Direct Expansion Chiller)

The jet pump oil return taps on the chiller vessel are factory pre-set to design conditions. However re-adjustment may be needed after installation.

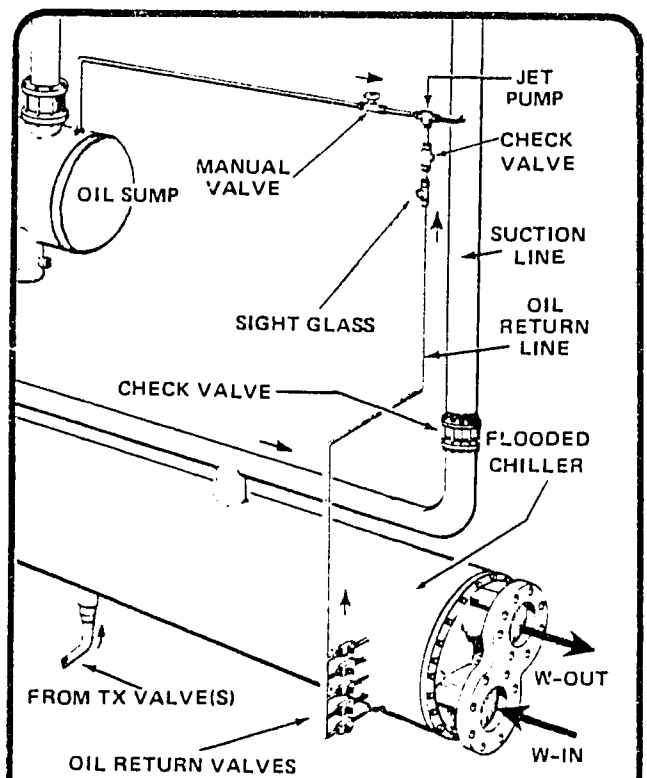

FIG. 32 TYPICAL EVAPORATOR OIL RETURN

- **Adjustment (Flooded Type)** - Once the maximum and minimum liquid refrgerant levels are established, adjustment may be made. All dip tubes that are within the liquid operating range are to remain fully open. All dip tubes that are never exposed to liquid refrigerant are to remain closed, to prevent capacity reduction. If extended pulldown is anticipated, the lowest dip tube should remain fully open.

- **Adjustment (Direct Expansion Type)** - Valve is to remain fully open on dip tube.

3. OIL COOLING SYSTEM MAINTENANCE

3a. Liquid Injection Oil Cooling System

FIG. 33 TYPICAL LIQUID INJECTION OIL COOLING SCHEMATIC

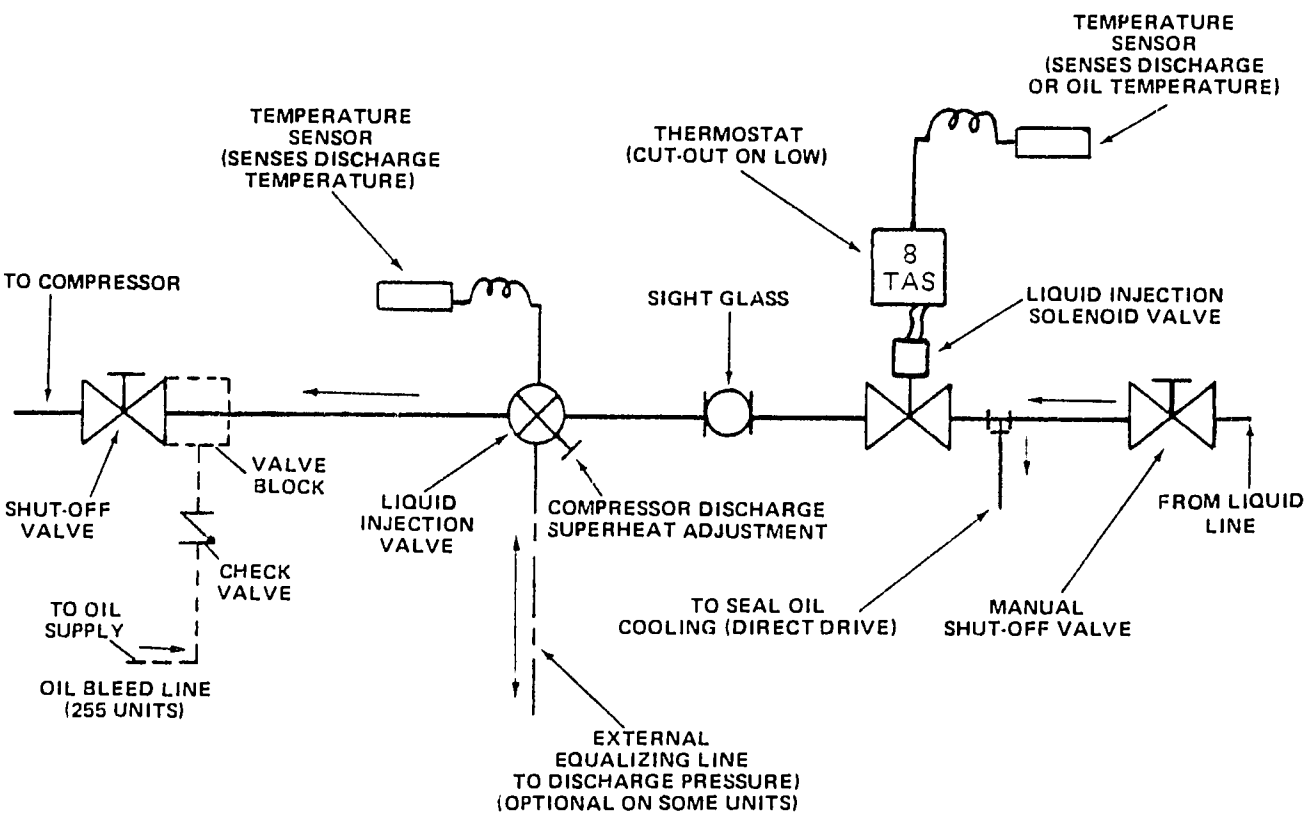

- **Normal Operation** - This system is designed to hold the oil temperature to the compressor inside the 135°F to 200°F (57°C to 93°C) range under all conditions of operation. This is done by a combination of controls. The liquid injection valve is factory adjusted to provide 40°F to 50°F (22°C to 28°C) discharge superheat at 100% load and design head pressure. That is the discharge temperature that will be controlled at 40°F to 50°F (22°C to 28°C) above saturated discharge temperature.

EXAMPLE: At 105°F (41°C) condensing temperature and 100% load, the discharge temperature will be controlled at 145°F to 155°F (63°C to 68°C) at 100% load. At 115°F (46°C) condensing temperature the discharge temperature will be controlled at 155°F to 165°F (68°C to 74°C) at 100% load.

At low loads, the superheat provided by the liquid injection valve will decline to approximately 25°F (14°C) and in the usual system the head pressure will also rebalance lower.

EXAMPLE: 10% load, 90°F (32°C) C.T. the liquid injection valve will control at 115°F (46°C). It is preferable to maintain a higher value to prevent oil dilution, so under these conditions, the thermostat will cycle the solenoid valve to maintain 140°F ± 5°F (60°C ± 3°C) oil temperature.

> **CAUTION:** The thermostat setting should not be altered in the field. If the unit is stopped by the thermostat, the cause should be determined and corrected.

- **Abnormal Operation** - If the liquid injection valve fails in the closed position the unit will cycle off on the oil temperature thermostat, or the oil pump motor thermostats (or hermetic motor inherent protector, where applicable). If the liquid injection valve fails in the open position, the thermostat and solenoid will take over control until the liquid injection valve can be repaired.

- **Settings** - Thermostat: As noted on the unit job wiring diagram. TX Valve: Adjusted to maintain 40°F to 50°F (22°C to 28°C) above saturated discharge temperature (100% load, design conditions) minimum.

NOTE: Heat transfer paste must be used in the bulbwell.

3b. Water Cooled Oil Coolers

The water cooled oil coolers require periodic cleaning of the water side to assure maximum efficiency. It is recommended that the tubes are cleaned out at the same time that the condenser is cleaned. (Refer to Condenser Maintenance)

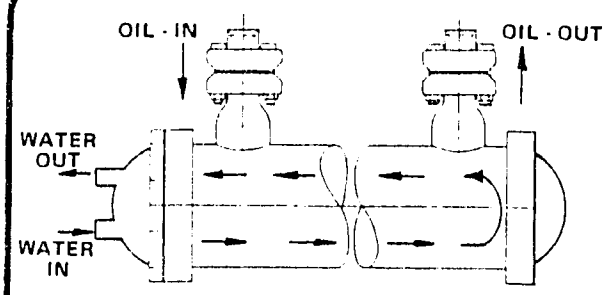

FIG. 34 TYPICAL TWO-PASS WATER COOLED OIL COOLER

- **Oil Cooler Water Regulating Valve** – These valves are factory adjusted but may require periodic re-adjustment if too high an oil temperature occurs that is not attributed to oil cooler fouling or oil pump problems. This valve should also be flushed out when the oil cooler is cleaned.

SP-24 *(Oil Cooler Water Regulating Valve Adjustment)*

1. To raise the temperature opening point, turn adjusting screw counterclock wise; to lower the temperature opening point, turn adjusting screw clockwise.

NOTE: Temperature closing point of valve is non-adjustable. Temperature actuated valves close approximately 3°F to 5°F (1.7°C to 2.8°C) below opening point.

SP-25 *(Oil Cooler Water Regulating Valve Flushing)*

1. Lift range spring follower with screwdrivers at two sides of lower spring cap to open valve.

2. Backflush oil cooler, holding valve open (this procedure should not affect valve adjustment).

3c. Seal Oil Cooler System (Direct Drive Models)

> CAUTION: The thermostat setting should not be altered in the field. If the unit is stopped by the thermostat, the cause should be determined and corrected.

- **Normal Operation** – This system is designed to hold the temperature of the oil being pumped to the seal to 115°F ± 5°F (46°C ± 3°C), under all conditions of operation by adjustment of its thermal expansion valve.

- **Abnormal Operation** – If the temperature operated expansion valve fails in the closed position, the unit will cycle off from the oil temperature thermostat, which senses the oil temperature out of the seal oil cooler. If the temperature operated expansion valve fails in the open position, the heat exchanger may flood through and the oil will be overcooled. The seal oil cooling system in conjunction with the liquid injection system will not perform properly if flashing liquid is supplied to the expansion valves.

- **Settings** – Thermostat: 130°F (54.4°C) cut out, 127°F (52.8°C) cut in. Temperature operated expansion valve: 115°F ± 5°F (46.1°C ± 2.7°C) oil temperature at bulbwell.

SP-26 *(Seal Oil Temperature Adjustment)*

NOTE: When adjusting the temperature setting on the thermal expansion valve to maintain seal oil temperature time must be allowed for the system to react and stabilize before further adjustment.

1. With a thermo-couple properly insulated and orientated at the thermal expansion valve bulbwell (on oil line) monitor the oil temperature.

2. Clockwise rotation of the temperature adjustment will lower oil temperature. Adjust accordingly.

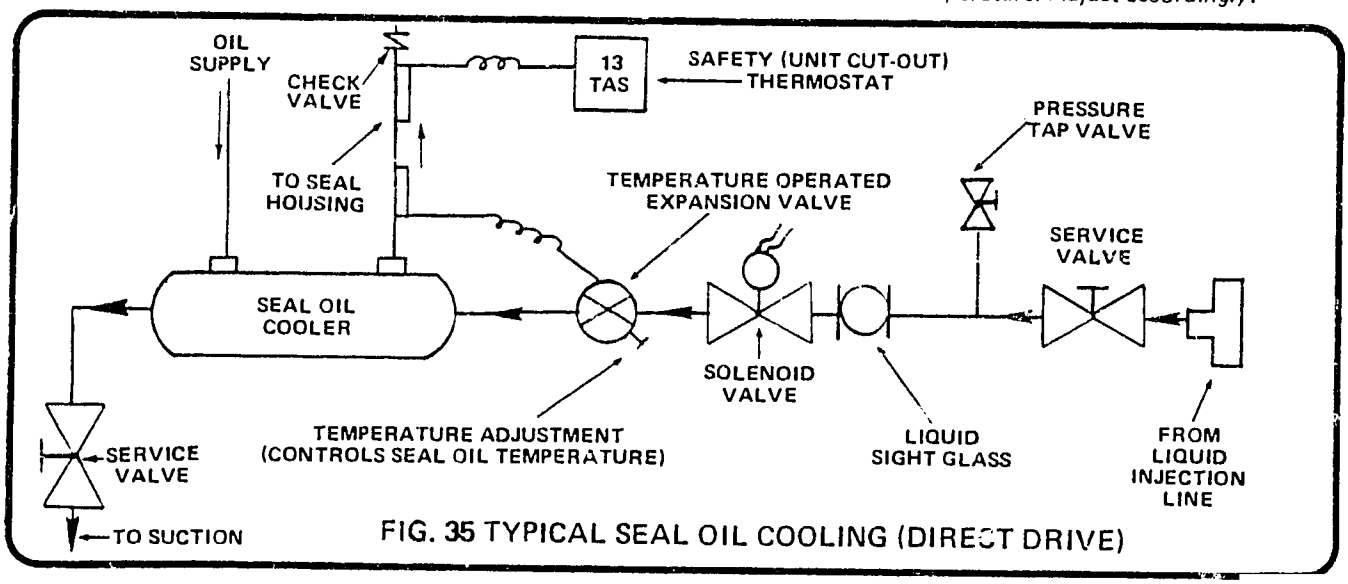

FIG. 35 TYPICAL SEAL OIL COOLING (DIRECT DRIVE)

4. HIGH/LOW SIDE COMPONENT MAINTENANCE

4a. Condenser Cleaning

To assure optimum efficiency, the condenser water tubes should be cleaned of scale, sludge, and slime deposits. Individual water conditions will determine how often the tubes are cleaned. One indication of tube fouling, is rising condensing pressures not attributed to air or other causes. There are two methods of tube cleaning.

1. Mechanical - Using brushes to remove loose material deposits.

2. Chemical - Flushing solvent to remove scale deposits.

NOTE: It is recommended that only a reputable professional chemical cleaning organization be used for the cleaning of the condenser. Damage could result to the heat exchanger from the use of an improper, solution or from exposure for too long a period.

SP-27 *(Mechanical Cleaning of Condenser)*

NOTE: Head gaskets need not be renewed after each head disassembly operation. Gasket must be replaced if it is physically disfigured or otherwise deteriorated.

1. Isolate water side of condenser, vent, drain and remove heads.

2. Remove loose material which has settled in the tubing with brushes. Flush thoroughly with fresh water, drain and restore heads and piping to vessel, torquing nuts evenly. Insure no entrapped air exists by venting high points of water system.

4b. Condenser Tube Plugging

Plugging has long since been accepted as standard service procedure. A maximum 5% of the total number of tubes may be plugged. The recommended method of repair can be performed without pumping out the refrigerant if due care is exercised.

SP-28 *(Tube Plugging)*

1. With unit off, shut down the condenser water flow.

2. Drain condenser water supply and return piping and remove both heads.

3. Conduct leak test (refer to SP-37)

4. Drill and tap tube sheet for 1/2 inch pipe plug or tapered plug and plug accordingly.

5. Install heads, with new gaskets if required. Connect water piping and fill condenser water supply.

6. Start pump and vent water system of entrapped air at high points of piping, and at vessel heads.

7. Add to refrigerant charge if necessary. (Refer to SP-15)

8. Check moisture indicators for evidence of water and change filter drier elements if necessary.

- **Condenser Relief Valves** - The condenser relief valve is adjusted and sealed at the factory. No maintenance is anticipated. However, if the relief valves do blow off at the design pre-set pressure, the cause should be determined and the relief valves should be replaced if they do not properly re-seat.

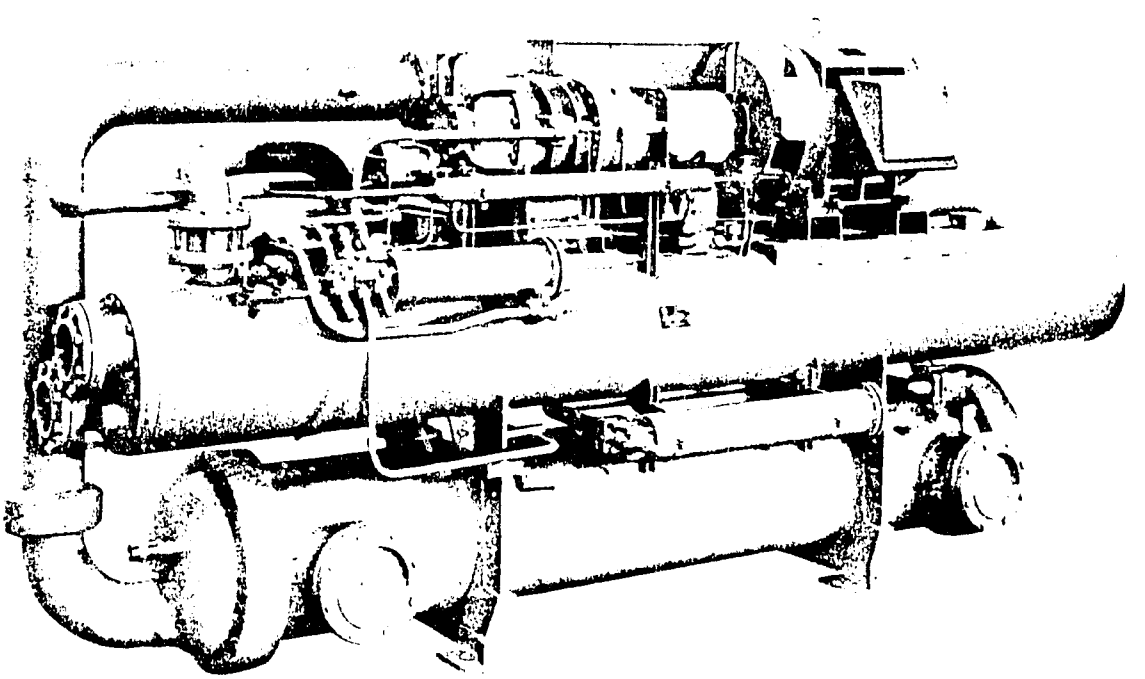

PCX-O DIRECT DRIVE PACKAGED CHILLER

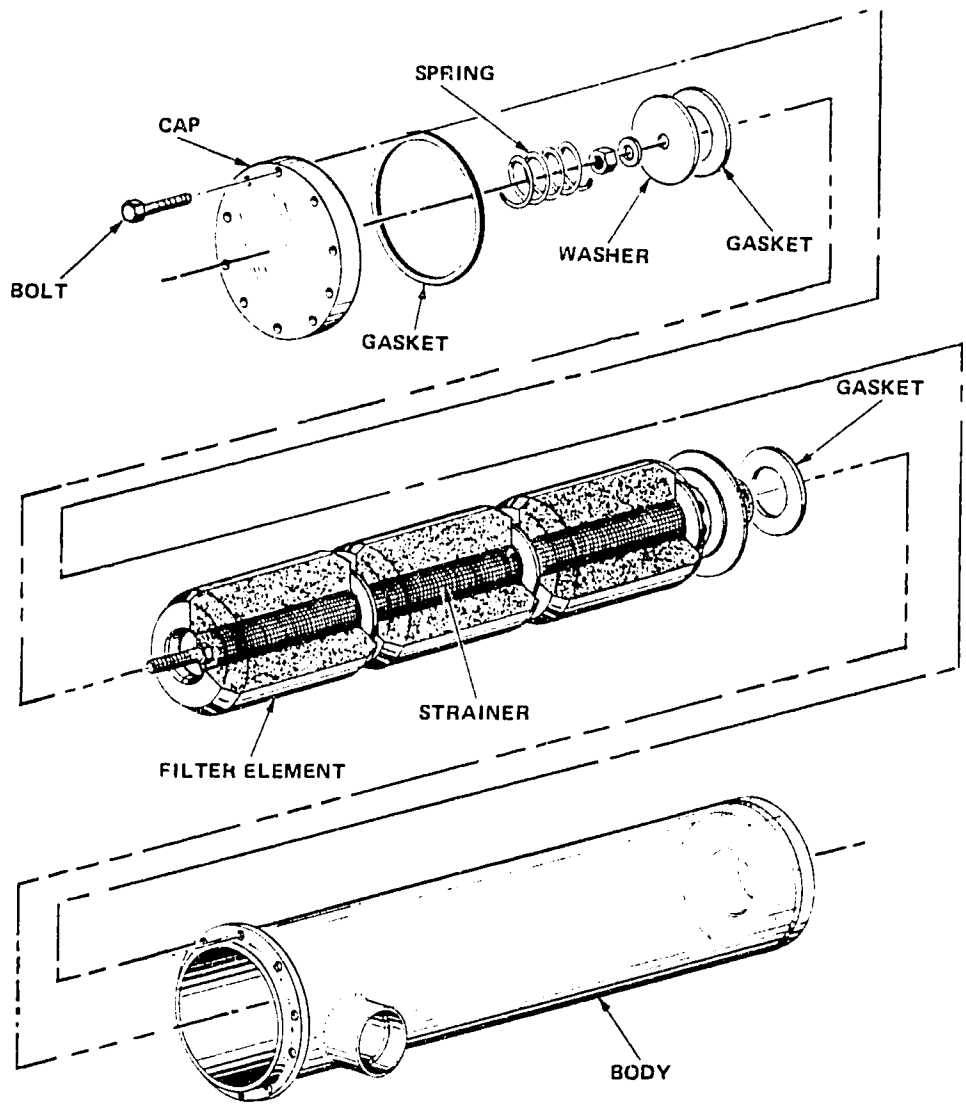

FIG. 37 TYPICAL REFRIGERANT FILTER DRIER

4c. Filter Drier Replacement

The filter drier elements should be replaced at scheduled intervals, when a specific maintenance action requires, or when moisture is evident in the system. The maximum operational pressure drop across the filter drier is 5 PSI (34.5kPa)..

SP-29 *(Filter Drier Replacement)*

1. Partially pumpdown system (Refer to SP-7)

2. Close both manual shut-off valves to isolate the filter drier.

3. Slowly vent enclosure to atmospheric pressure by opening plug.

4. Disassemble the drier assembly, discarding the car tridge elements and gaskets. Remove bolts evenly as spring is in compression to flanged cover.

5. Clean the housing and internal parts thoroughly. Inspect for damaged or deteriorated parts. Replace as needed.

6. Assemble the filter drier and torque bolts evenly.

7. Purge drier assembly and open isolation valves.

8. With the unit operating, check for leaks with a leak tester.

Once every two years, an inspection of the chiller tubes should be made, and the tubes cleaned if necessary. (flooded chiller models, clean inside tubes; direct expansion chiller models, clean outside of tubes).

4d. Cleaning Chiller

Because the chiller water or brine is a closed system less frequent cleaning of the chiller tubes is required.

4d. Cleaning Chiller - continued

NOTE: It is recommended that only a reputable professional chemical cleaning organization be used for the cleaning of the chiller. Damage could result to the heat exchanger from the use of an improper solution, or from exposure for too long a period.

- **Chiller relief valve(s)** - The chiller relief valve is adjusted and sealed at the factory, no maintenance is anticipated. However, if the relief valve does blow-off at the design pre-set pressure, the cause should be determined and the relief valve should be replaced if it does not properly re-seat.

4e. Brine Maintenance

The chiller cooling medium must be periodically checked and maintained at design percent concentration, for a freeze point at least 10°F (6°C) below minimum saturated evaporator temperature. The actual freeze point may be determined by obtaining the specific gravity (with a hydrometer) and the temperature of the brine. With this data obtained, the percent concentration and freeze point may be determined from curves available from the brine manufacturer.

WARNING The factory is not responsible for damage due to chiller freeze-up as a result of negligent periodic maintenance of brines.

- **Chloride Brines** - In addition to proper freeze point, chloride brines require special precautions. A rust inhibitor must be used in adequate quantity and the brine PH must be checked and adjusted periodically to prevent potential chiller corrosion. Brine PH must be maintained between 7.5 and 8.0 and must be adjusted before filling chiller.

NOTE: Consult brine manufacturer or a professional agency for mixing the solution, adjusting PH, and proportioning the rust inhibitor.

4f. Pilot Thermo Valve

The pilot thermo valve is located on a branch liquid line and is used in conjunction with the pilot operated solenoid thermal expansion valve. The pilot thermo valve is factory pre-set to maintain 10°F to 15°F (5.6°C to 8.3°C) superheat (direct expansion chillers) or 0 to 5°F (0 to 2.8°C) superheat (flooded chillers). Superheat is the temperature increase of the refrigerant gas above the saturation temperature at the existing pressure. The superheat setting can be re-adjusted, if required, to improve system performance.

- **Pressure and Temperature Measurement** - The suction gas temperature should be measured on the suction line at the pilot thermo valve bulbwell and must be insulated from ambient air temperature. Units that locate the bulb in the leaving chilled water or brine flange require temperature measurement on the suction line halfway up the vertical riser on the side of the pipe.

CAUTION: The orientation of the thermocouple is critical for temperature measurement. Do not locate the thermocouple on any elbows.

The pressure may be measured by installing a calibrated gage at a gage connection closest to the temperature measurement. Both pressure and temperature measurements must be taken either upstream or downstream of the check valve.

SP-30 *(Superheat Adjustment)*

1. To increase superheat (decreases flow and reduces suction pressure), turn adjustment screw clockwise two full turns. Allow time for the system to react.

NOTE: As measured superheat decreases with a partial load, these adjustments should be made at 60% load or above. (With a dual pilot thermo valve arrangement, the load must be manipulated for each setting.)

2. Observe for increased superheat; adjust accordingly until design superheat is obtained.

- **Maintenance** - The only maintenance required for the pilot thermo valve is inspection, cleaning or replacing the cage assembly, and/or replacing the power assembly.

SP-31 *(Thermo-Expansion Valve Dissasembly)*

NOTE: The liquid line must be at atmospheric pressure before disassembly.

1. Remove the two cap screws, lift off the power assembly and remove the cage assembly.

2. Compress the cage spring to inspect pin and seat. If either are worn or eroded, replace cage assembly.

3. Check power assembly by pressing finger against buffer plate; replace assembly if plate is easy to move or depress.

CAUTION: Be sure all three gaskets are replaced in their proper places on the cage; that the two lugs on the cage assembly feed into their grooves in the power assembly; and that valve parts are not forced together.

FIG. 40 TYPICAL PILOT THERMO VALVE

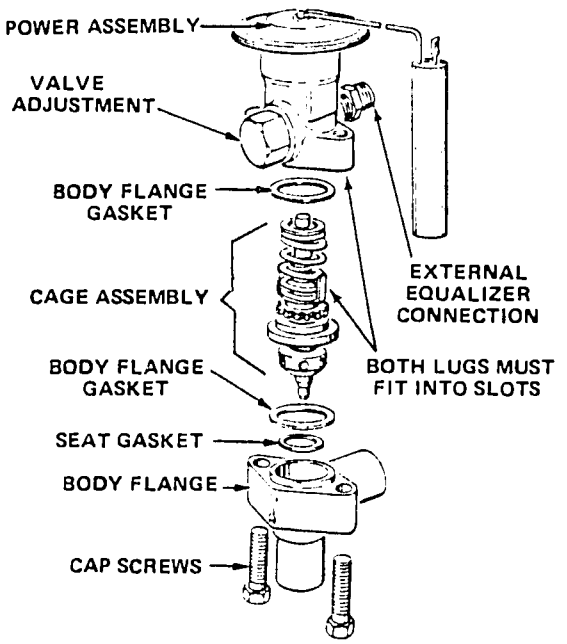

4g. **Pilot Operated Solenoid Thermal Expansion Valve(s) (Main)**

No adjustment of the pilot operated solenoid TX valve is necessary. This valve may be manually unseated by turning the manual opening stem beneath the seal cap on the top of the valve in a clockwise direction, until a stop position is reached.

NOTE: Always return the manual stem to the original position before starting the unit.

- **Maintenance**

NOTE: The most expedient method for inspection, cleaning or replacing parts would be to repair them in place.

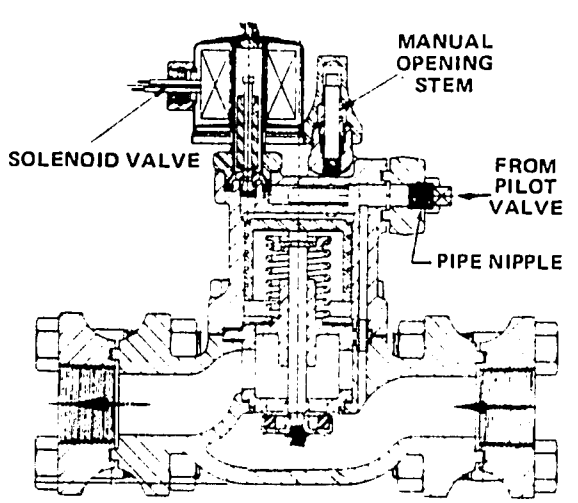

FIG. 41 TYPICAL P.O.S. THERMAL EXPANSION VALVE

SP-32 *(Disassembly/Maintenance P.O.S. Valve)*

1. *Remove the solenoid coil.*
2. *Remove four cap screws, lift off upper body. Remove piston, inspect piston, rings, cylinder wall; check for free movement of piston in cylinder; wipe clean, oil all surfaces. Clean bleed port in top of piston.*
3. *Remove cage assembly, compress cage spring and examine valve disc, restrictor plug and seat; replace cage assembly if valve disc or seat are cut or eroded.*
4. *Re-assemble, insert cage with gaskets. Carefully place piston with rings in upper body. Re-assemble unit and tighten cap screws evenly. Replace pilot line connection, test for leaks and re-install.*
5. *Take apart the solenoid valve assembly. Check seat for wear, dirt, rust, etc. Replace if required.*

TYPICAL THROTTLING ARRANGEMENT (1) PILOT, (1) MAIN EXPANSION VALVE

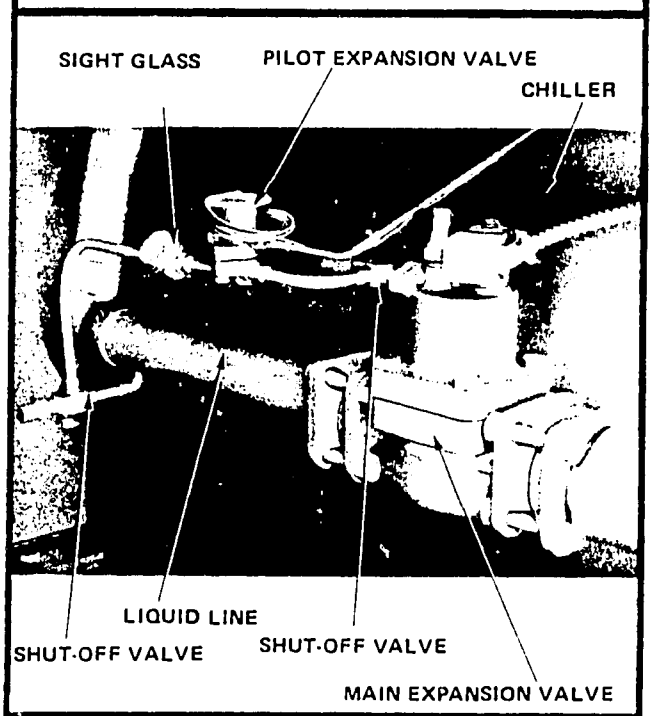

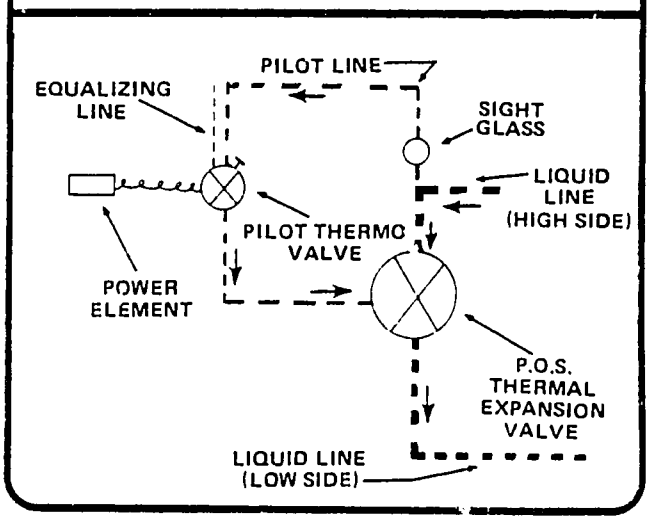

FIG. 42 TYPICAL THROTTLING ARRANGEMENTS

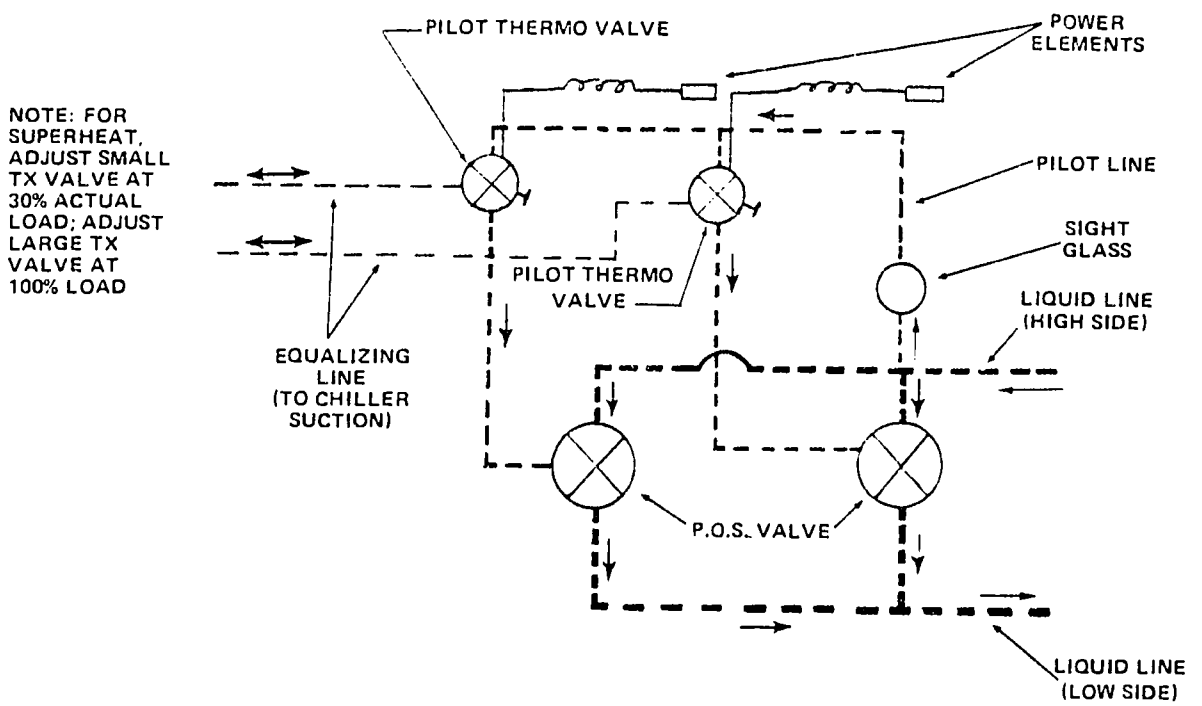

SCHEMATIC - (2) PILOT THERMO VALVES AND
(2) PILOT OPERATED SOLENOID THERMAL EXPANSION VALVES.

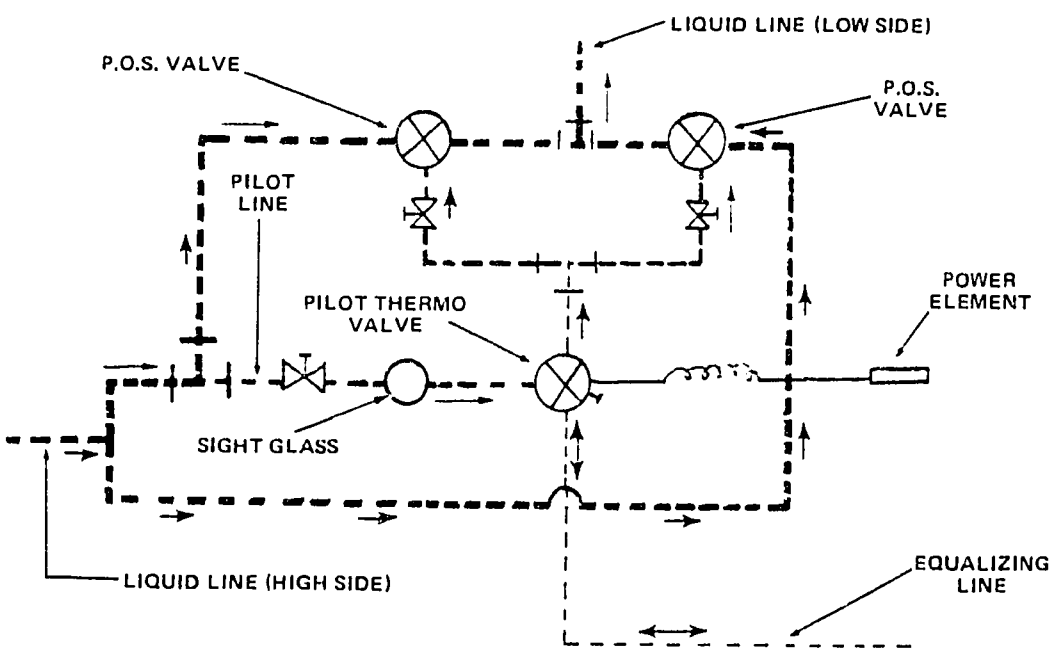

SCHEMATIC - (1) PILOT THERMO VALVE AND
(2) PILOT OPERATED SOLENOID THERMAL EXPANSION VALVES

FIG. 43 - TYPICAL SUCTION FILTER - IN LINE TYPE

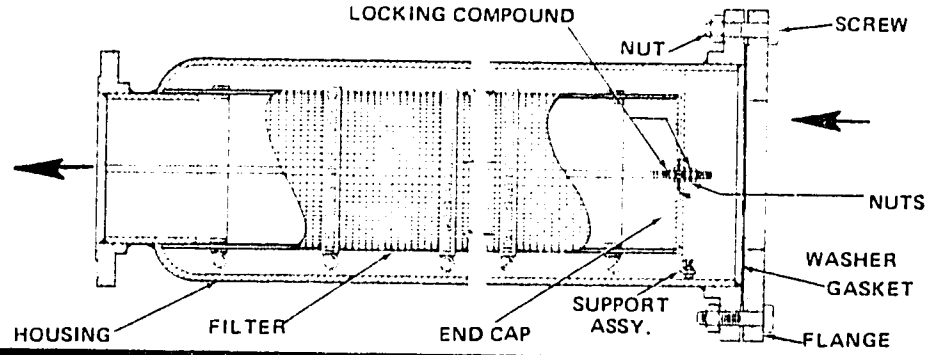

FIG. 44 - TYPICAL SUCTION FILTER - CHILLER HEAD TYPE

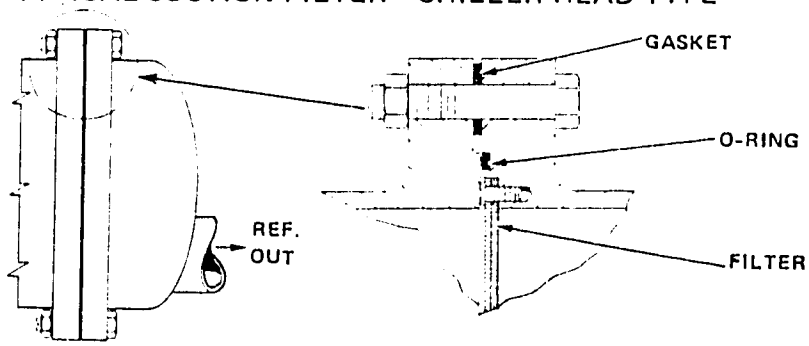

4h. Suction Filter

The suction filter should normally be inspected, cleaned or the element replaced only when a major overhaul is performed. Direct expansion type chiller units have the filter assembly located in the suction side of the chiller head. Flooded type chiller units have the filter located in the suction line near the compressor.

SP-33 *(Suction Filter Maintenance-In-Line Type)*

1. Transfer refrigerant to the condenser or remove the charge completely. (Refer to SP-7 thru SP-12) Isolate suction line and insure this portion of the system is at atmospheric pressure.

2. Remove insulation over suction filter.

3. Remove flange bolts, lift and remove housing weldment from piping. Remove old gaskets.

4. Remove support assembly and filter element and replace element.

NOTE: A locking compound has been applied on the nuts, when re-installing, be sure the compound is suitable for the refrigerant used and compatible with the refrigerant oil.

5. Position filter over support pipe. Install nut on center rod and push against end of filter.

NOTE: Adjusting screw on support assembly may be loosened for clearance.

6. Install second nut on center rod. Push support assembly hard against filter to crush overhanging media. Tighten outer nut against support assembly to secure it in place against filter core. Apply locking compound, then turn inner nut outward until it contacts inside surface of support assembly. Inner nut should now be in correct position.

7. Remove outer nut and support assembly. Install end cap, and position over filter. Install washers, support assembly and apply locking compound. Install outer two nuts. Tighten nut to clamp parts in place.

8. Adjust screw on support assembly to prevent end movement of filter. Apply locking compound to jam nut (on housing weldment) then tighten.

9. Re-install into piping using new gaskets, and torque bolts evenly. Epoxy insulation over housing weldment. Add refrigerant as required and test for any refrigerant leakage. (Refer to SP-15)

SP-34 *(Suction Filter Maintenance-Head Type)*

1. Transfer refrigerant to the condenser or remove the charge completely. Isolate the chiller and insure chiller is at atmospheric pressure (Refer to SP-7 thru SP-12).

2. Remove insulation at chiller suction head and suction flange. Remove flange bolts at chiller head and suction piping flange.

3. Remove chiller head and pipe assembly, head flange O-Ring and suction pipe flange gasket.

4. Disassemble filter element and inspect. Clean filter element with R-11 or replace if necessary.

5. Reassemble filter element to head with felt facing chiller.

6. Install chiller head assembly using new flange gaskets and head O-Ring.

7. Add refrigerant as required and test for any refrigerant leakage.

G. OPTIONAL SUBSYSTEM MAINTENANCE

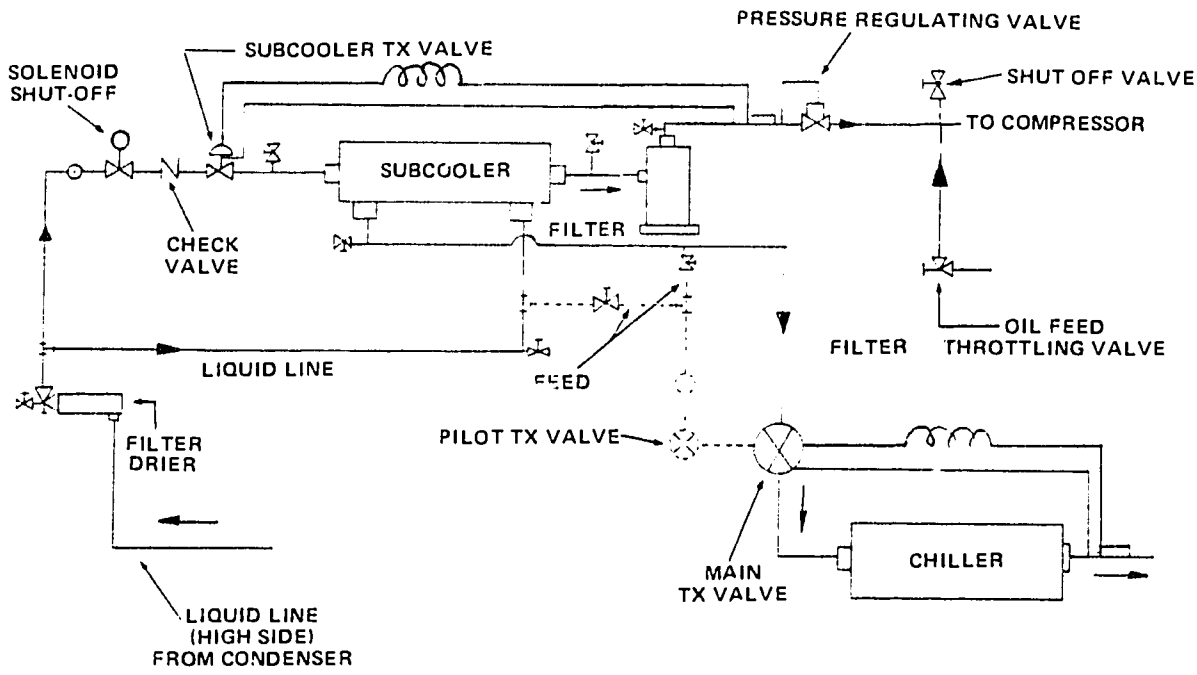

FIG. 45 TYPICAL VAPOR INJECTION SUBSYSTEM SCHEMATIC

1. VAPOR INJECTION

NOTE: It is necessary to have a load available that is sufficient to run the machine at full load at design conditions for the proper adjustment of the vapor injection system.

- **Adjustments**

- **Subcooler TX Valve** - Adjust superheat to 8°F to 12°F (4.4°C to 6.7°C) as measured at the subcooler outlet.

- **Evaporator Pressure Regulator** - Adjustment must be set at 10% below design conditions.

- **Feed Lines to Pilot TX Valve** - Use the warm liquid normally unless job conditions are such that unit operation is improved using cold liquid.

- **Oil Feed Valve** - Close valve until noise level increases; then back off 90° rotation.

- **Vapor Injection Shut-Off** - Normally set 65% slide valve travel to open solenoid. It can be adjusted from 40% to 75% to suit job conditions.

2. HOT GAS BYPASS (UNLOADED START)

The only periodic maintenance required on the unloaded start gas bypass is to insure the solenoid valve is operational and the timer maintains a 10 second timing period. The voltage supplied to the solenoid must not exceed ± 10% of the rated nameplate voltage. If the valve sticks or chatters, it should be disassembled and cleaned or replaced if required.

3. HOT GAS BYPASS (CAPACITY CONTROL)

The capacity control hot gas bypass requires a throttling valve adjustment upon installation and may require periodic readjustment. The throttling valve (located on the hot gas bypass line) should be adjusted at design percent slide valve activation as noted on the unit wiring diagram. The voltage supplied to the solenoid must not exceed ± 10% of the rated nameplate voltage. If the valve sticks or chatters, it should be disassembled and cleaned or replaced if required.

SP-35 *(Hot Gas Bypass Adjustment)*

1. Position slide valve at design percent slide valve activation by manipulating the load to the chiller.

NOTE: Do not position slide valve by means of the temperature load controller. This will not reflect an accurate valve adjustment.

2. Monitor the temperature of the leaving chilled water or brine. if the temperature approaches the corresponding low pressure cut-out, open the throttling valve to avoid shut-down of the unit.

3. Rotating valve in the clockwise direction will lower leaving brine temperature, and may cycle off the unit. Rotating valve in the counter clockwise direction may load the compressor or may cycle the hot gas bypass solenoid on and off. Neither of these extremes are desirable. Adjust valve between these actions.

H. TYPICAL SYSTEM TESTS

MOTOR WINDING
1. INSULATION RESISTANCE TEST

This test is a measure of the dielectric resistance of the insulation to determine the condition of the motor. A D.C. voltage, greater than the operating voltage, is applied to the motor lead using a megohmmeter (megger). The resistance between ground and the motor lead is measured on the megger to determine the quality of insulation between the motor winding and ground. The megger is also used to determine the quality of insulation between the individual windings.

NOTE: Motor housing heaters must be activated a minimum of 24 hours to insure that the stator windings are at least 20°F (11°C) higher than the saturation temperature of the refrigerant vapor. The stator temperature is determined as specified in *SP-36*. A normal refrigerant charge in the unit is required.

CAUTION: As high voltages are used, extreme caution must be emphasized while conducting this test. All personnel in the area must be warned of the test being performed. All external power must be disconnected from the unit and safety gloves must be worn.

SP-36 *(Motor Insulation Resistance Test)*

1. Be sure that the main power source is disconnected from the unit.

2. Disconnect the motor terminal leads and the motor protector leads from their respective terminals on the compressor motor or oil pump motor.

3. Discharge any residual charges which may exist by grounding out each motor terminal.

4. Check the refrigerant pressure in the housing and with the proper refrigerant pressure temperature chart, convert the pressure to saturated temperature.

5. With an ohmmeter determine the resistance of each temperature sensor. With the table below convert this resistance to temperature. If this temperature does not exceed the saturated refrigerant temperature by at least 20°F (11°C) the housing heaters should be turned on for another 24 hours.

6. Phase to ground test - Connect the megger to terminal 1 and ground. Take a reading and record. Continue until readings of all terminals are taken and recorded.

7. Phase to phase test - Connect megger as shown in Figure 46 to isolate terminal 1. Take reading and record. Continue until all phases, as shown in Figure 46, have been isolated and their readings taken and recorded.

8. With the table below determine the minimum meg ohm values for the corresponding housing temperature. If the readings are below the minimum values, turn the housing heaters on for an additional 24 hours then repeat steps 5 through 7. If readings remain below minimum, contact National Service, Dunham-Bush, West Hartford, CT.

If readings are above the minimum, the power lead terminals may be connected and tightened in accordance with the label found in the cover of the terminal box.

9. Start the motor. After 8 or 10 hours of operation repeat this service procedure. If readings fall below the minimum values DO NOT START MOTOR *- Contact National Service, Dunham-Bush, West Hartford, CT.*

FIG. 46 PHASE TO PHASE TEST

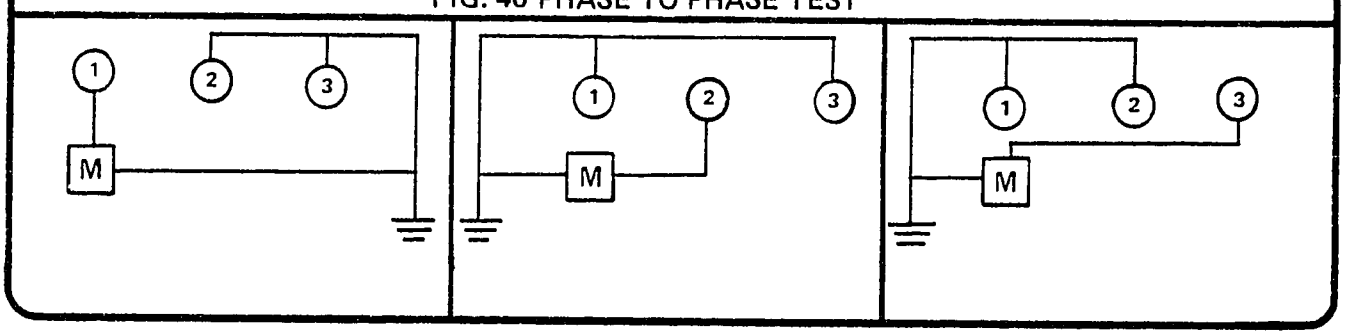

MINIMUM MEGGER VALUES

TEMP. SENSOR TERMINAL	CORRESPONDING TEMPERATURE		MINIMUM MEGGER READING	TEMP. SENSOR TERMINAL	CORRESPONDING TEMPERATURE		MINIMUM MEGGER READING	TEMP. SENSOR TERMINAL	CORRESPONDING TEMPERATURE		MINIMUM MEGGER READING	TEMP. SENSOR TERMINAL	CORRESPONDING TEMPERATURE		MINIMUM MEGGER READING	TEMP. SENSOR TERMINAL	CORRESPONDING TEMPERATURE		MINIMUM MEGGER READING
(OHMS)	(°F)	(°C)	(MEG OHMS)	(OHMS)	(°F)	(°C)	(MEG OHMS)	(OHMS)	(°F)	(°C)	(MEG OHMS)	(OHMS)	(°F)	(°C)	(MEG OHMS)	(OHMS)	(°F)	(°C)	(MEG OHMS)
68	40.0	4.4	215	78	90.1	32.3	60	88	139.5	59.7	5	98	187.4	86.3	5	108	233.3	111.8	5
69	45.0	7.2	185	79	95.1	35.1	50	89	144.4	62.4	5	99	192.1	88.9	5	109	237.8	114.3	5
70	50.0	10.0	165	80	100.1	37.8	40	90	149.2	65.1	5	100	196.3	91.3	5	110	240.7	115.9	5
71	55.0	12.8	135	81	105.1	40.6	35	91	154.1	67.8	5	101	201.4	94.1	5	111	242.3	116.8	5
72	60.0	15.6	125	82	110.0	43.3	30	91	158.9	70.5	5	102	206.0	96.7	5	112	251.1	121.7	5
73	65.0	18.3	115	83	115.0	46.1	25	93	163.7	73.2	5	103	210.6	99.2	5	113	255.5	124.2	5
74	70.0	21.1	90	84	119.9	48.8	20	94	168.5	75.8	5	104	215.2	102.0	5	114	259.8	126.6	5
75	75.0	23.9	85	85	124.8	51.6	15	95	173.2	78.4	5	105	219.8	104.3	5	115	264.1	128.9	5
76	80.0	26.7	75	86	129.8	54.3	10	96	178.0	81.1	5	106	224.3	106.8	5	116	268.9	131.3	5
77	85.0	29.4	65	87	134.7	57.1	10	97	182.7	83.7	5	107	228.8	109.3	5	117	272.7	133.7	5

H. TYPICAL SYSTEM TESTS CONTINUED

2. REFRIGERANT LEAK TEST

Pressure leak testing may be performed on either a component of the refrigerant system, or on the entire system.

> CAUTION: All gages must be valved off to avoid damage under high test pressure.

SP-37 *(Refrigerant Leak Test)*

1. *Complete System (Remove refrigerant charge and have sample tested for quality.*
   a. *Open all line valves and manually unseat the expansion valves.*
   b. *Add 25 psig of refrigerant R22. Back this up with dry nitrogen bringing the pressure up in steps to 90% of the relief valve setting for the chiller.*
   c. *Isolate the vessel. (King Valve)*
   d. *Bring up the pressure in the remainder of the unit to 90% of relief valve setting for the condenser.*
   e. *Check all vessels, valves and joints with an electronic leak detector, or halide torch. If leaks are found, isolate them and make repairs.*
2. *Partial System*
   When the charge is pumped into the condenser a low side pressure leak check can be made using refrigerant R-22.

> CAUTION: If nitrogen is used the low side test pressure must be kept 20 psig below the condenser pressure to prevent nitrogen from contaminating the charge.

   a. *Open all refrigerant valves on the low side and unseat the expansion valves.*
   b. *Check all vessels, valves and joints with an electronic leak detector or halide torch. If leaks are found, isolate them and make repairs.*

3. CHECKING PHASING OF MOTORS FOR PROPER DIRECTION OF ROTATION

a. Start-up unit in normal manner.

b. When the compressor starts to accellerate, immediately check the suction pressure gage. If the pressure is dropping, the compressor is wired correctly and turning in the proper direction. If the suction pressure is rising, the motor is wired incorrectly and the control circuit breaker should be turned off immediately. Operation of the compressor in the wrong direction at full speed can damage the compressor and system.

4. TYPICAL CONTROL OPERATION TESTS

> WARNING: The factory is not responsible for damage to any component of the unit as a result of mis-calibration and or testing of safety and operational controls.

NOTE: No deviations in system wiring from that shown on schematics furnished shall be made without prior written approval of Dunnam-Bush, Inc.

> CAUTION: The following procedures require that all control settings, valves and other devices and adjustments on the unit be at normal settings, or conditions, at the start of each procedure except as specifically stated. At the completion of each procedure, restore all normal conditions to the unit before starting the next procedure.
>
> Compressor starts limited to 3 starts per hour.

The purpose of tripping the safety controls is to insure proper operation and calibration to prevent a system failure. The tests may also be used to troubleshoot a suspected control defect. **Consult the wiring diagram for design settings. The following procedures are of a typical unit. Consult the wiring diagram to verify sequence of events.**

Equipment: Test lamp, ohm or multi-meter, thermometer, thermocouple tester, stop watch, resistance decade box, test gages.

4a. Safety Controls (Test)

(IPS) High /Low Suction Pressure Switch (Low Pressure Function)

With the unit operating normally unload the compressor to a minimum load by means of the manual knob on the temperature load controller. Gradually close the drier service valve (high side) and insure the safety switch light illuminates while the unit shuts down at the design low pressure cut-out.

(IPS) High Low Suction Pressure Switch (High Pressure Function)

With the unit operating normally, position the slide valve in the 10% to 30% range by means of the manual knob on the temperature load controller. Slowly throttle a shut-off valve in the condenser field piping. Observe that the safety switch light illuminates while the unit shuts down at the specified high pressure cut-out.

> CAUTION: Do not exceed the design high pressure cutout setting or 90% of the pressure setting of the high side relief valve.

Manually reset the high discharge pressure switch.

(7TAS) Low Refrigerant Temperature (Flooded Chiller)

With the control power off, place a continuity tester in parallel with the control. Remove the bulb of 7TAS from its well and immerse in an ice bath. Monitor the temperature of the ice bath. Adjust the setting of the control and observe if the control switches position at the temperature of the ice bath. If the control is not faulty readjust to its proper setting.

(1TAS) Compressor Motor Thermal Protector (Hermetic Models Only)

Disconnect compressor start control circuit to prevent compressor from starting. Disconnect line voltage at oil pump motor starter (or circuit breaker) to prevent oil pump operation during test. Disconnect and insulate wire from one motor sensor. Connect a resistance decade box set at 75 ohms to bypass the sensor. Reset the safety device located on this circuit. Activate control circuit voltage. Raise the resistance in 1 ohm increments to 110 ohms. At this point, raise the resistance in 0.1 ohms increments. Continue until the safety switch light illuminates. The resistance at this point should be 115.4 ± .80 ohms.

(12TAS) High Oil Temperature Control (Direct Drive)

With control power off, remove the power element bulb from the well and immerse in water bath. Raise

H. TYPICAL SYSTEM TESTS CONTINUED

and lower temperature of water bath to determine cut-in, cut-out, setting. Adjust accordingly to design temperature.

(13TAS) Seal Oil Temperature Safety (Direct Drive)

With control power off, disconnect the control. Connect a continuity tester to the terminals of the control and immerse the bulb into a water bath of 130°F (54.5°C). The control should trip at 130°F ± 5°F (54.5°C ± 2.8°C). Make adjustments as necessary.

(2TAS) Freezestat

Monitor the temperature of the leaving water or brine With control power off disconnect the freezestat from the control circuit. Connect a continuity tester to the terminals of the control. Raise the setting of this control to the temperature of the leaving water or brine. If the temperature is the same the control is in calibration and can be reset and reconnected into the circuit. If the temperature setting does not agree the control is faulty.

(FLS) Flow Switch

With the unit off, disconnect the electrical power to the chilled water pump. Attempt to start the unit. The safety light should illuminate while the unit does not start. Connect electrical power to pump and start chiller pump. Throttle water flow to chiller while monitoring pressure drop. Continue throttling until flow switch trips. Record ΔP across chiller. Flow switch should trip at approximately 25% of design pressure drop which will be approximately 50% of the design flow.

(1TR) Anti-Short Cycle Timer

Start the unit and observe that the anti-short cycle timer period light illuminates simultaneously with the start-up delay light. Observe that the anti-short cycle timer period light extinguishes 20 minutes after the start-up delay light is extinguished. The unit must operate continuously during this period to observe this action. This procedure will de-energize the anti-short cycle timer coil without stopping the unit, or attempting to restart, during the 20 minute time lapse.

4b. Automatic and Operating Controls (Test)

(3TR) Oil Pump Shut Down Time Delay Relay

With the unit off, pull the circuit breaker supplying electrical service to the oil pump motor. Attempt to start unit in normal manner. The oil pump starter will pull in. Observe that the oil pressure failure light is illuminated and that the oil pump starter drops out 60 seconds later.

(2TR) Oil Pressure Failure Time Delay

Connect a test lamp in parallel with the oil failure time delay coil. With the unit operating normally, gradually close the oil filter shut off valve(s) to slightly below pressure switch cut out pressure (high side of filter). Observe that the oil failure light illuminates and unit shutdown occurs 20 seconds later. If the unit has not shut down after 24 seconds, stop the machine manually and replace the timer.

(4TR) Start-Up Time Delay

Connect a test lamp to terminals on each side of the start-up time delay coil. Start the unit in the normal manner, and observe that the compressor starts after 60 seconds with continuous electrical power to the start-up time delay coil.

(2PS) Low Suction Pressure Unload Control

With the unit operating normally unload the compressor to minimum load by means of the manual knob on the temperature load controller. Gradually close the drier service valve (high side) and observe if the (fast) unload solenoid energizes when the suction pressure drops to design cut-in. Gradually open the filter drier service valve, and observe the (fast) unload solenoid de-energizes when the suction pressure rises to design cut-out. The differential on this control is fixed when used on std. heat reclaim units.

(3PS) Differential Oil Pressure

Connect a test lamp to terminals on each side of the oil failure time delay coil. With the unit operating normally, gradually close the oil filter shut-off valve(s) (high side of filter). Insure that the oil failure time delay coil energizes, when the oil refrigerant discharge differential pressure gauge drops to the design cut-in pressure. Gradually open the oil filter valve(s) and insure that oil failure time delay coil is de-energized when the oil refrigerant discharge differential pressure rises to the design cut-out pressure.

> **CAUTION:** This procedure must be performed with sufficient speed so that the oil failure time delay coil is actually energized for less than 20 seconds to prevent unit shut-down.

(12TR) Seal Oil T'stat By-Pass Timer (Direct Drive)

Start unit when the compressor initially starts, commence timing with a stop watch. After four minutes elapse, observe the contacts open on the seal oil t'stat by-pass timer relay.

(8TAS) Liquid Injection Thermostat (If Equipped)

With all power removed from the unit, disconnect the wire leading from the liquid injection thermostat to the liquid injection solenoid, connect a continuity tester across the liquid injection thermostat terminals. Remove the liquid injection thermostat bulb from its bulbwell and submerge in water in a suitable container. Raise and lower the water temperature and observe that the thermostat contacts close and open within design settings.

(TLC) Temperature Load Controller

> **CAUTION:** Heat reclaim TLC require this test when in heat reclaim load.

- **Current Limiting Function** - connect an Amp Probe at the terminals of the motor starter, with the unit operating normally at approximately full load, slowly throttle the water service valve in the field piping of the condenser. Observe the slide valve unload when the compressor motor current reaches 1.06 x the motor nameplate rated load amps.

H. TYPICAL SYSTEM TESTS CONTINUED

- **Temperature Control Function** - with the unit operating normally, observe that the chilled water (brine) outlet is at design temperature, when the index mark on the temperature knob is vertical. Rotate the knob clockwise and observe the slide valve unload. Rotate the knob counterclockwise, and observe the slide valve load. Reset at design temperature, rotate the temperature adjusting knob slightly back and forth to determine that there is ½° to 1°F (.28°C to .56°C) difference between loading and unloading action. This is the dead band. Replace the TLC if the dead band exceeds 3°F (1.7°C) ΔT.

4c. Additional Controls For Heat Reclaim Units

(13PS) Head Pressure Controller and Control Shunt (STD Heat Reclaim)

With the control panel off, valve off and disconnect the discharge pressure line at the (13PS) control. Remove control cover to obtain access to adjusting screws. Attach a container of nitrogen to a pressure regulating valve, a calibrated gauge, a manual vent, and a shut-off valve. Secure the connecting hose to the (13 PS) control inlet. Raise the pressure to the control to 13 PS step one design cut-in. Step-one switch should trip at design pressure. To raise the trip point, rotate the screw clockwise. Vent pressure slowly and observe switch trip back to its original position. Failure to trip at design cut-out requires adjustment of the differential wheel. The differential (cut in minus cut-out = diff.) is increased by clockwise rotation of the wheel. Only the step-one switch has an adjustable differential.

> **CAUTION:** Do not exceed the proof pressure rating on the nameplate or the design cut-in/cut-out pressures.

Repeat for 13 PS step two switch; raise pressure for design cut-out and reduce pressure for design cut-in, repeat for 13 PS step three switch; raise pressure for design cut-in, reduce pressure for design cut-out.

(7CR) Slide Valve Block To Prevent Unloading And Hot Gas By-Pass (Low Slide Valve Limit) STD-Heat Reclaim

NOTE: This control can only be checked while the unit is consistently operating in the heat reclaim mode throughout the test.

When the heat reclaim light (6 LT) illuminates manually unload the compressor by means of the temperature load controller (TLC) manual knob. Observe the slide valve indicator percent increments. The slide valve travel should stop at design low percent limitation while the hot gas by-pass solenoid is activated. For servicing the IDR assembly, consult compressor service manual 6136.

(10CR) Slide Valve Block To Prevent Loading (OPT)

NOTE: This control can only be checked when the unit is operating in the heat reclaim mode.

Immediately after the heat reclaim light illuminates, load the compressor by means of the temperature load controller (TLC) manual knob. Observe the slide valve indicator percent increments. The slide valve travel should stop at design high percent limitation.

> **CAUTION:** The leaving brine temperature should be monitored and a load must be available to unit to prevent shutdown.

STD. = Standard OPT = Optional

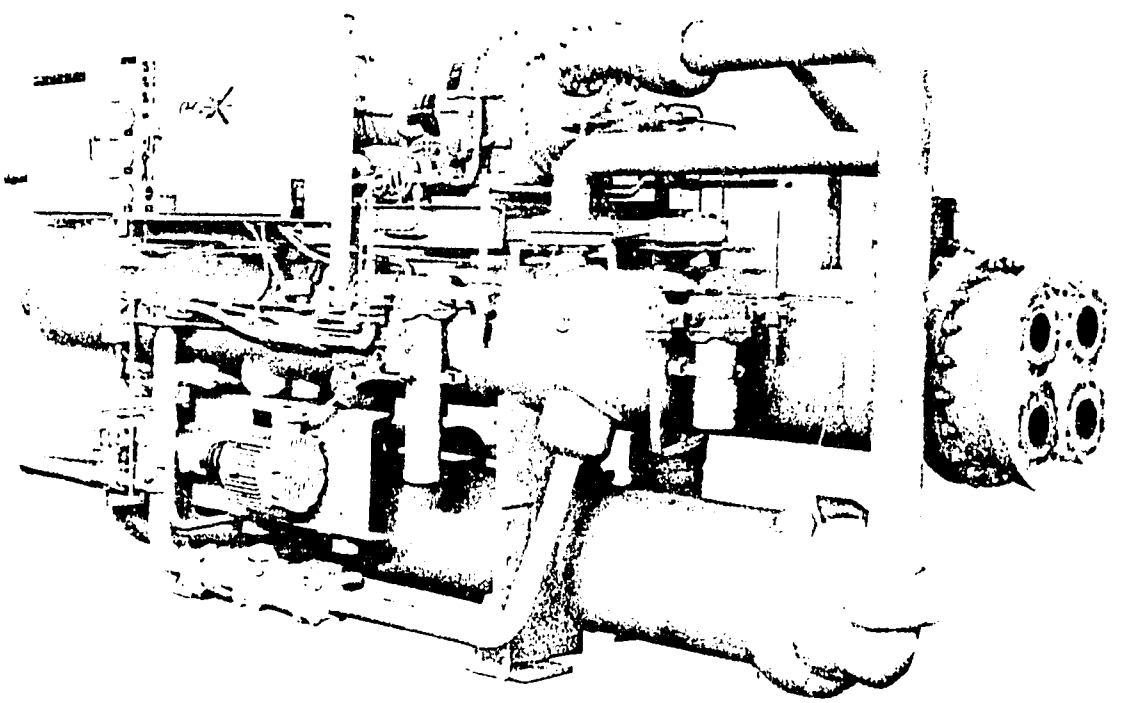

PCX-OHR - HEAT RECOVERY PACKAGED CHILLER

V. TROUBLE SHOOTING

A. GENERAL

Operating personnel must be completely familiar with the equipment and this manual. This will be necessary for correct diagnosis of any troubles and will permit immediate correction of minor difficulties. It is important that operators be able to quickly distinguish conditions requiring expert service in order to minimize down-time and maintenance expense. Comparison of the readings entered in the current Daily Log with those entered immediately following installation of the unit will be of considerable assistance in locating trouble areas.

To determine and isolate common problems which might occur, the following chart was made which lists symptoms, possible causes and remedies.

SYMPTOM	POSSIBLE CAUSE	REMEDY
A. Unit shuts down on compressor starter overload	1. Faulty compressor or motor 2. Overloads trip below 105% of full load amperage 3. Low voltage 4. Load limit relay out of adjustment	1. Contact Dunham-Bush Service Representative 2. Install properly sized overloads 3. Check line voltage. Must be ± 10% of rated voltage 4. Check and adjust for proper operation
B. Unit shuts down on oil pump starter overload	1. Cold oil 2. Low voltage 3. Bound Pump 4. Plugged oil filter 5. Faulty motor 6. Closed service valve	1. Check oil sump heaters for proper operation, repair and replace as necessary 2. Check line voltage must be ± 10% of rated voltage 3. Clean and repair as necessary 4. Clean and replace as necessary 5. Repair or replace as necessary 6. Open service valve
C. Unit shuts down on High-Low pressure switch	1. High Discharge Pressure a. Poor or no condensing water flow b. Condenser tubes fouled c. Refrigerant overcharge d. Air or noncondensables in refrigerant system e. Water supply to condenser is too warm f. Pressure switch out of calibration 2. Low Suction Pressure a. Plugged filter/drier b. Low refrigerant charge c. Low water flow thru chiller d. Fouled chiller e. Frozen chiller f. Pressure switch out of calibration g. Low condenser water temperature	1. a. Clean strainers, check setting of flow valve, check condenser pump - clean and repair as necessary b. Clean tubes, have water checked by water treatment specialist c. Remove excess refrigerant d. Purge air or non condensables e. Check, repair and adjust condenser water cooling facilities f. Reset or replace as necessary 2. a. Replace elements if pressure drop is above limits b. Check sight glass for flashing gas, check for leaks, repair leaks. Add refrigerant as necessary c. Check control valves for proper settings, check for dirty strainer, adjust clean and repair as necessary d. Clean chiller, consult water treatment specialist e. Check and reset or replace freeze-up switch as necessary, check brine for proper % solution f. Reset or replace as necessary g. Adjust condenser water regulating valve (if applicable). Check tower temperature controls
D. Shut down of unit on seal oil temp.	1. Low refrigerant charge 2. Inoperative TX valve 3. Inoperative seal oil cooler solenoid 4. Filter drier plugged	1. Check sight glass for flashing gas, check for leaks Repair leaks add refrigerant as necessary 2. Replace valve 3. Check coil for burnout 4. Clean or replace as necessary
E. Shut down on high oil temp.	Units with Liquid Injection: 1. Low refrigerant charge 2. Inoperative liquid injection TX valve 3. Inoperative liquid injection solenoid 4. Discharge temperature thermostats out of adjustment Units with Water Cooled Oil Cooler: 5. Oil cooler water valve out of adjustment 6. Inadequate water supply to oil cooler 7. Dirty oil cooler	1. Check sight glass for flashing gas, check for leaks, repair leaks and add refrigerant as necessary 2. Replace valve 3. Check coil for burnout 4. Reset to lower temperature 5. Readjust 6. Check condenser water pump and clean strainer 7. Check and clean tubes if necessary, check condenser water treatment installation
F. Unit shuts down on freezestat	1. Inadequate flow of chilled water 2. Malfunctioning freezestat 3. Incorrect TLC temperature setting	1. Check settings of valves, clean strainers, check chiller pump, clean and repair as necessary 2. Reset or replace as necessary 3. Readjust to desired leaving chilled water temperature
G. Unit shuts down on flow switch	1. Pump malfunctioning 2. Strainers plugged 3. Valves not set properly 4. Air in system 5. Flow switch inoperable	1. Check pump, clean and repair as necessary 2. Clean strainers 3. Reset valves 4. Bleed system 5. Replace

V. TROUBLE SHOOTING

A. GENERAL CONTINUED

SYMPTOM	POSSIBLE CAUSE	REMEDY
H. Unit shuts down on chilled water pump	1. Overload on pump	1. a. Pump malfunction, repair or replace as necessary b. Plugged strainer - clean c. Closed system valves, reset as necessary
J. Low discharge/oil temperature	1. Sump heaters not functioning during off period 2. Maladjusted expansion valves 3. Discharge temperature thermostat out of adjustment Water Cooled Oil Coolers 4. Oil cooler water valve out of adjustment 5. High water pressure	1. Repair and replace as necessary 2. Readjust superheat settings of main expansion valves, liquid injection and seal oil cooler expansion valves 3. Reset to lower temperature Water Cooled Oil Coolers 4. Readjust 5. Readjust water pressure regulator
K. High discharge/ oil temperature	1. Maladjusted expansion valve 2. Discharge temperature thermostat out of adjustment 3. Liquid injection solenoid valve malfunction Water Cooled Oil Coolers 4. Oil cooler water valve out of adjustment 5. Inadequate water supply to oil cooler 6. Dirty oil cooler	1. Readjust superheat settings of main expansion valves, liquid injection and seal oil cooler expansion valves 2. Reset to lower temperature 3. Check coil for burnout. Water Cooled Oil Coolers 4. Readjust 5. Check condenser water pump and clean strainer 6. Check and clean tubes
L. Unit periodically running low or losing oil	1. External oil leak 2. Low discharge superheat and or suction superheat 3. Units with jet pump not picking up oil - clogged lines or maladjusted valves 4. Discharge temperature thermostat out of adjustment 5. Liquid injection solenoid valve malfunction 6. Liquid injection TX valve malfunction	1. Check unit visually for leaks, repair as necessary 2. Readjust superheat as necessary 3. Repair or readjust as necessary 4 Reset to lower temperature 5. Repair or readjust as necessary 6. Repair or readjust as necessary
M. Shut down on low oil pressure	1. Oil filter plugged 2. Low oil pressure safety switch malfunction 3. Low discharge superheat and or suction superheat	1. Clean and replace as necessary 2. Repair or readjust as necessary 3. Readjust superheat as necessary

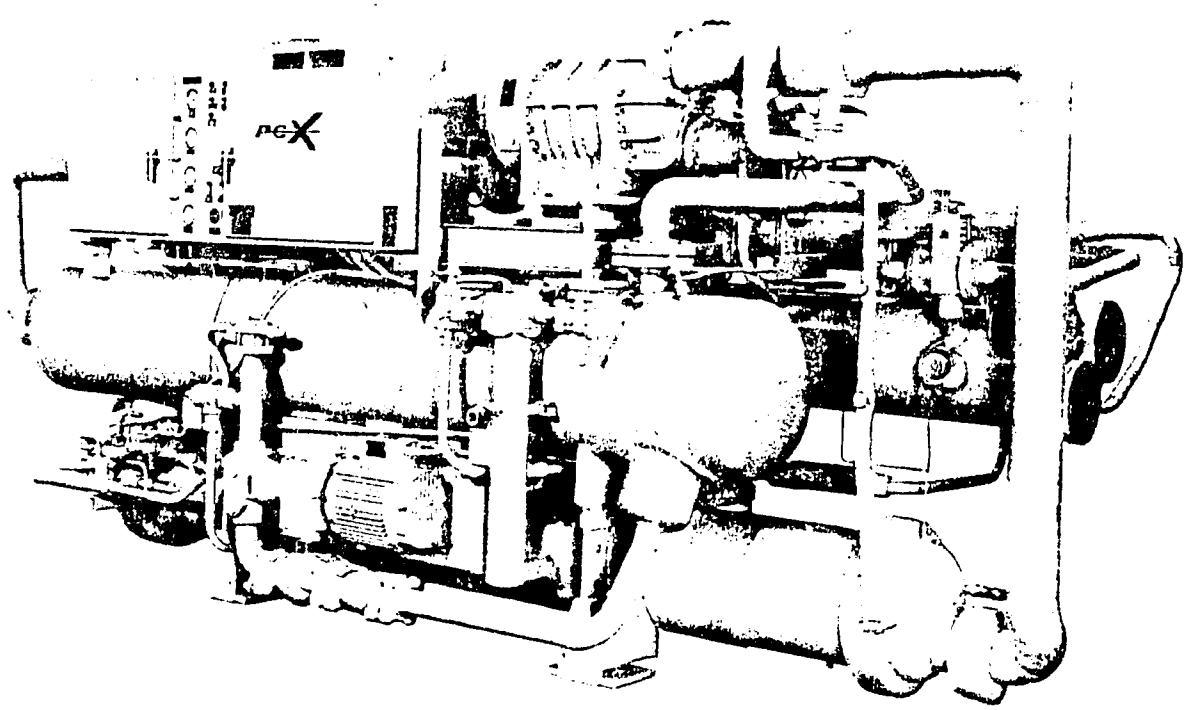

IPCX-O DIRECT DRIVE PACKAGED CHILLER

FORM 9181A

DUNHAM-BUSH

DAILY OPERATING LOG
ROTARY SCREW COMPRESSOR PACKAGED CHILLER (PCX, IPCX)

UNIT MODEL _____ MONTH _____

UNIT SERIAL NUMBER _____ YEAR _____

		DATE		MONDAY	TUESDAY	WEDNESDAY	THURSDAY	FRIDAY	SATURDAY	SUNDAY
TIME		CHECK		☐AM ☐PM	☐AM ☐PM	☐AM ☐PM	☐AM ☐PM	☐AM ☐PM	☐AM ☐PM	☐AM ☐PM
ELAPSED TIME INDICATOR READING		HR								
SLIDE VALVE INDICATOR POSITION		%								
MOTOR CURRENT (COMPRESSOR)		AMPS								
MOTOR VOLTAGE (COMPRESSOR)		VOLTS								
REFRIGERANT SUCTION PRESSURE		PSIG	kPa							
REFRIGERANT SUCTION TEMPERATURE		°F	°C							
REFRIGERANT DISCHARGE PRESSURE		PSIG	kPa							
REFRIGERANT DISCHARGE TEMPERATURE		°F	°C							
NET OIL PRESSURE (GAGE MINUS DISCHARGE)		PSI	kPa							
SEAL DRAINAGE (DIRECT DRIVE ONLY)		CC/HR.								
SEAL OIL TEMPERATURE (DIRECT DRIVE ONLY)		°F	°C							
OIL TEMPERATURE ENTERING COMPRESSOR		°F	°C							
OIL SUMP SIGHT GLASS LEVEL		%								
WATER TEMPERATURES (CONDENSER)	ENTERING	°F	°C							
	LEAVING	°F	°C							
OUTSIDE AMBIENT AIR TEMPERATURE	WET BULB	°F	°C							
	DRY BULB	°F	°C							
REFRIGERANT INDICATORS		WET/DRY								
TRANSFER MEDIUM (BRINE, WATER) TEMPERATURES (CHILLER)	ENTERING	°F	°C							
	LEAVING	°F	°C							
CHILLED (AIR) MEDIUM (SYSTEM) IN	DRY BULB	°F	°C							
	WET BULB	°F	°C							
CHILLED (AIR) MEDIUM (SYSTEM) OUT	DRY BULB	°F	°C							
	WET BULB	°F	°C							
RECORDED BY										

COMMENTS

FORM NO. 9181-1

DUNHAM-BUSH

MONTHLY OPERATING LOG
ROTARY SCREW COMPRESSOR PACKAGED CHILLER (PCX, IPCX)

UNIT MODEL _____ DATE _____

UNIT SERIAL NO. _____ RECORDED BY _____

[ ] 1000 HOUR INTERVAL

LUBRICATION	OIL FILTER PRESSURE DROP		PSI	kPa	
	OIL PUMP MOTOR CURRENT		AMPS		
	OIL PUMP MOTOR VOLTAGE		VOLTS		
	OIL SUMP HEATER OPERATION		—		
	LOAD/UNLOAD SPEED (FULL STROKE)		MINUTES		
	OIL PUMP MOTOR STARTER AND RELAY CONTACTORS		—		
	SEAL OIL COOLER OPERATION (DIRECT DRIVE ONLY)		—		
	EVAPORATOR OIL RETURN VALVE (IF EQUIPPED)		—		
	COMPRESSOR MOTOR STARTER AND RELAY CONTACTORS		—		
	CONTROL AND GAGE CALIBRATION		—		
	REFRIGERANT LEAKAGE		—		
REFRIGERANT	FILTER DRIER PRESSURE DROP		PSI	kPa	
	LIQUID INJECTION OPERATION		—		
	DISCHARGE SUPERHEAT	DISCHARGE TEMP.	°F	°C	
		DISCHARGE PRESSURE	PSIG	kPa	
		SUPERHEAT	ΔF°	ΔC°	
	SUCTION SUPERHEAT	SUCTION TEMPERATURE	°F	°C	
		SUCTION PRESSURE	PSIG	kPa	
		SUPERHEAT	ΔF°	ΔC°	
HYDRONIC	CHILLER COOLING MEDIUM	FREEZE POINT	°F	°C	
		PH (BRINE ONLY)	—		
	CONDENSER PRESSURE DROP (WATER SIDE)		PSI	kPa	
	CHILLER PRESSURE DROP (BRINE SIDE)		PSI	kPa	

COMMENTS _____

[ ] 3000 HOUR INTERVAL

COMPRESSOR COUPLING ALIGNMENT (DIRECT DRIVE MODELS ONLY)		CM	INCH	
OIL PUMP COUPLING ALIGNMENT (DIRECT DRIVE OIL PUMP ONLY)		CM	INCH	
OIL ACIDITY (TOTAL ACID NUMBER)			TAN	
INSULATION RESISTANCE TEST	TEMP. SENSOR READINGS		OHM	
	MEG OHM READINGS		MEG OHM	

C. TYPICAL CONDENSER WATER PIPING

CONDENSER WATER PIPING

A relatively constant condensing temperature (compressor head pressure) should be maintained. The supply water temperature and flow rate must, therefore, be controlled to maintain this constant condensing temperature over the wide load and operating range of the packaged chiller. Valve manufacturers recommendations for piping should be followed.

If a cooling tower is supplying the condenser water, then some means to maintain a constant water supply temperature should be employed.

There are a number of different methods; e.g., cycling the tower fan off and on through a thermostat sensing the cooling tower sump water; temperature dampers controlling air flow (may also be used in conjunction with fan cycling) or by-passing all or part of the return water directly to the sump via a 3-way valve actuated by a controller sensing sump temperature.

The most stable compressor operation can be obtained with a water regulating valve modulating the water flow to the condenser, controlled by condensing pressure.

Heat reclaim units condense refrigerant at higher pressures while operating in the heat reclaim mode. However, this is justified by the amount of heating and cooling performed per kilowatt input. Controlling head pressures for heat reclaim units is highly specialized depending on the system application and is not included in this discussion.

The following are typical valving arrangements with suggested guidelines for the piping configurations. The cooling source is applicable to cooling towers, evaporative water coolers and natural sources.

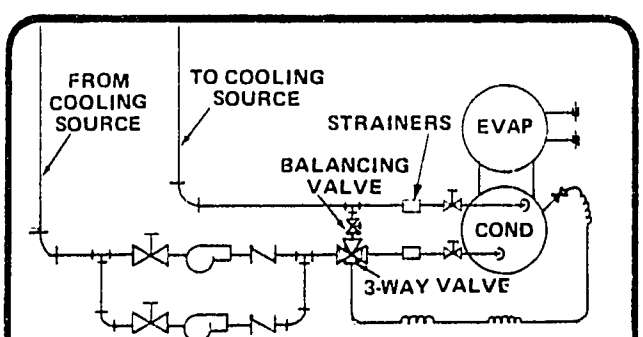

FIG. 47 TYPICAL DIVERSION OF ENTERING CONDENSER WATER

1. **Typical Diversion of Entering Condenser Water with Three-Way Valve.(Fig. 47)**

   Stable packaged chiller operation can be obtained by diverting a percentage of the entering water to bypass the condenser as a function of condensing pressure.

   With a diverting system, entering condenser water is regulated by a three-way valve sensing refrigerant condensing pressure. The water valve therefore maintains constant refrigerant head pressure in the condenser.

   - **Oil Cooler Piping** - Units that are equipped with a water cooled oil cooler have a two-way water regulating valve.(Fig. 48)

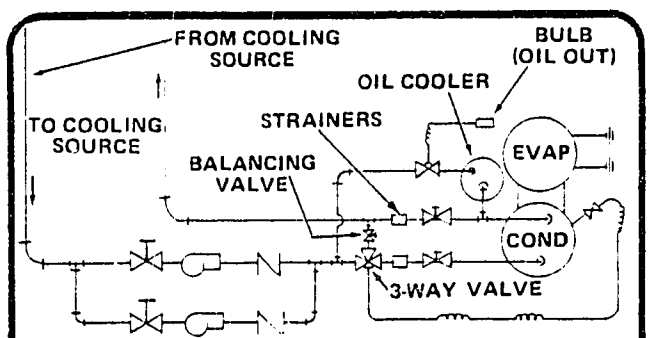

FIG. 48 TYPICAL DIVERSION OF ENTERING CONDENSER WATER WITH OIL COOLER

   With this configuration, the piping must be designed to have an uninterrupted water supply flow to the oil cooler. The supply to the oil cooler must be located upstream of the condenser water regulating valve.

2. **Cool Weather Package Operation**

   Any application of condenser water regulating valves with an anticipated entering water temperature of below 50°F (10°C) requires additional considerations. A minimum condensing pressure must be maintained to insure proper operation of the thermal expansion valves. If entering condenser water is not effectively regulated, proper operation of the packaged chiller may be jeopardized. Consult factory for parameters concerning your application.

3. **Cold Weather Operation (Cooling Towers)**

   If a system is to be operated in a cold climate [below 32°F (0°C)] some provision must be made to keep the cooling tower from freezing. Sump heaters or an indoor sump are two examples of how this can be accomplished. Consult the tower manufacturer for recommendations.

VI. APPENDIX

D. COMPRESSOR LUBRICATION REQUIREMENTS

The purpose of this chart is to define the type of oil used with large screw compressors (163, 204, 255mm) for various fluorocarbon applications.

TYPE OF OIL

TEMPERATURE		REFRIGERANT		
EVAPORATOR	CONDENSING	R-502 R-22	R-12	R-500
Above 20°F	Below 135°F	Oil 4	Oil 4	Oil 4
Above 20°F	Above 135°F	NA	Oil 14	Oil 14
Below 20°F	All	Oil 3	Oil 3	NA

This chart is used to define the oil pressure and oil failure switch settings for v rious applications.

REQUIRED OIL PRESSURE

TYPE SYSTEM	MINIMUM OIL FAILURE CUT-OUT SETTING (PSID)		FULL LOAD OIL PRESSURE (PSID)	
	BELOW 20° ET	ABOVE 20° ET	BELOW 20° ET	ABOVE 20° ET
PCX	20	20	40	40
IPCX	20	20	40	40
Heat Recovery	35	35	65	65

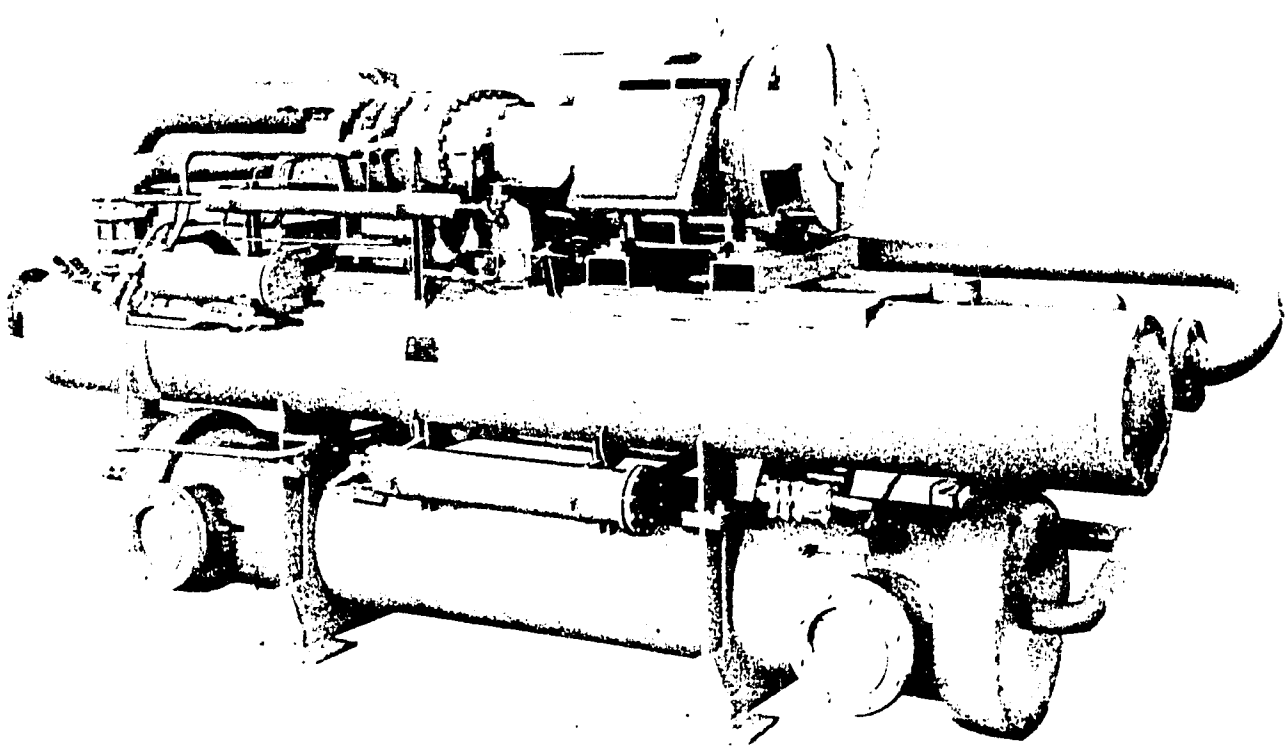

PCX-O DIRECT DRIVE PACKAGED CHILLER

E. TYPICAL INFORMATION TAGS AND LABELS

CAUTION

ALL ELECTRICAL CONNECTIONS MUST BE RETIGHTENED PRIOR TO STARTING THIS EQUIPMENT.

LOOSE CONNECTIONS CAN CAUSE DAMAGE TO THE WIRE, CONTROLS, MOTORS & ALSO CREATE A FIRE HAZARD.

TAG 56

USE
R22
ONLY

A-TAG 1-1

DISCHARGE
WARNING

OPEN THIS VALVE
BEFORE STARTING

DUNHAM-BUSH, INC.
COMPRESSOR DIVISION
WEST HARTFORD, CONN., U.S.A.

CHECK CONTROLS SETTINGS
BEFORE START-UP OF UNIT

CAUTION

'HAZARD OF ELECTRICAL SHOCK'
MORE THAN ONE DISCONNECT SWITCH MAY BE REQUIRED TO DE-ENERGIZE THE EQUIPMENT FOR SERVICING.

PLT2089

MOTOR TEMPERATURE SENSORS

USE ONLY THREE SENSORS-ONE IN EACH MOTOR PHASE

SENSORS 1 & 4 IN PHASE 1
SENSORS 2 & 5 IN PHASE 2
SENSORS 3 & 6 IN PHASE 3

COMBINATIONS OF SENSORS FROM BOTH SENSOR SETS CAN BE CONNECTED TO THE SAME MODULE; HOWEVER, TO DO SO THE COMMON TERMINALS OF BOTH SETS MUST BE CONNECTED TOGETHER.

A8-DCM 53

WARNING

DO NOT FORK LIFT FROM THIS END

A476029-001

CAUTION

PRIOR TO STARTING MOTOR:

STEP 1: MOTOR HOUSING HEATERS MUST BE ENERGIZED FOR 24 HOURS.
STEP 2: THE MOTOR TEMPERATURE RISE MUST BE AT LEAST 20°F ABOVE AMBIENT.
STEP 3: THE MOTOR MEGOHM READING MUST BE AT LEAST 50 MEGOHMS.

IT MAY BE NECESSARY TO LEAVE HEATERS ON LONGER THAN 24 HOURS TO ACHIEVE 20°F TEMP. RISE & 50 MEGOHMS IN SOME CASES.

STK36

TESTING OF MOTOR TEMPERATURE SENSORS

TO PREVENT PERMANENT DAMAGE TO THE MOTOR SENSORS, DO NOT CHECK THE SENSOR RESISTANCE WITH ANY INSTRUMENT POWERED BY A SOURCE GREATER THAN 6 VOLTS

AG 69-1

VI. APPENDIX

E. TYPICAL INFORMATION TAGS AND LABELS

OIL PUMP MOTOR POWER SUPPLY WIRING

THE POWER SUPPLY TO OPERATE THE OIL PUMP MOTOR IS FURNISHED AND WIRED BY THE CUSTOMER.

THE SUPPLY IS CONNECTED TO TERMINALS L1, L2, AND L3 OF THE OIL PUMP MOTOR CONTACTOR OR STARTER LOCATED IN THE CONTROL PANEL.

TAG CB

CAUTION

PRIOR TO STARTING THIS UNIT PHASE SEQUENCE MUST BE CHECKED TO AGREE WITH THE CONNECTIONS OF THE OIL PUMP & COMPRESSOR MOTORS TO INSURE PROPER DIRECTIONAL ROTATION. SEE INSTRUCTION MANUAL FOR VISUAL METHOD OF DETERMINING ROTATION WITH THE USE OF THE SYSTEM GAGES

RELIEF VALVE VENTING INFORMATION

CAUTION

1. FLEXIBLE CONNECTIONS MUST BE USED BETWEEN RELIEF VALVE AND EXTERNAL PIPING AND PIPING MUST BE SUPPORTED TO PREVENT STRAIN FROM BEING TRANSMITTED TO THE RELIEF VALVE ASSEMBLY.
2. WHEN TIGHTENING THE VENT CONNECTIONS TO THE RELIEF VALVE, HOLD THE UPPER HEX PORTION OF THE RELIEF VALVE WITH A WRENCH TO PREVENT IT FROM TURNING. THIS WILL PREVENT GASKET DAMAGE AND POSSIBLE LEAKES. DO NOT OVER TIGHTEN THE CONNECTIONS TO THE RELIEF VALVES

P/N 050128A1

WARNING

THIS MOTOR LIMITED TO THREE STARTS PER HOUR.

RESTARTING MORE OFTEN WILL DAMAGE MOTOR.

DO NOT BYPASS OR ADVANCE ANTI RECYCLE TIMER

WARNING

ATTENTION: SPECIAL FILTER ASSEMBLY INSTRUCTIONS — P/N: 050018A1

(1) THE ELEMENTS IN THIS SCHROEDER FILTER REQUIRE NEOPRENE GASKETS FOR FREON REFRIGERANTS
(2) STANDARD SCHROEDER ELEMENTS SUCH AS THOSE OBTAINED FROM LOCAL SOURCES HAVE BUNA N GASKETS. THESE GASKETS CANNOT BE USED WITH FREON REFRIGERANTS AND MUST BE DISCARDED
(3) FILTER ELEMENTS WITH NEOPRENE GASKETS ARE D/B PART NO. FLR125 AND ARE MARKED G603
(4) MOLDED NEOPRENE GASKETS ARE D/B PART NO. GKT543 AND ARE IDENTIFIED WITH A BLUE MARK
(5) FLAT NEOPRENE GKT523 OR MOLDED NEOPRENE GASKETS GKT543 CAN BE REUSED IF NECESSARY. IT IS RECOMMENDED THAT SPARE FLR125 SETS BE ORDERED TO BE AVAILABLE WHEN REQUIRED

WARNING

MOST WATER SUPPLIES CONTAIN DISSOLVED OR SUSPENDED MATERIALS WHICH CAUSE SCALE FORMATION, CORROSION AND PROPOGATE SLIME, ALGAE, ETC. IN ORDER TO PREVENT EXCESSIVE MAINTENANCE COSTS DUE TO SCALE FORMATION AND POSSIBLE TUBE FAILURE

IT IS ESSENTIAL

THAT BOTH CONDENSER WATER AND CHILLER SYSTEM WATER BE ANALYZED BY A QUALIFIED WATER TREATMENT COMPANY.

AND THEIR RECOMMENDATION FOR PROPER CONDENSER AND CHILLED WATER TREATMENT BE FOLLOWED

ANY FAILURE DUE TO IMPROPER AND/OR LACK OF WATER TREATMENT

WILL VOID THE WARRANTY.

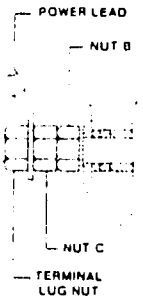

POWER LEAD TERMINAL TIGHTENING PRUCEDURE

1. NUT C TO BE JAMMED AGAINST NUT B WHILE HOLDING NUT B.
2. INSTALL POWER LEAD TERMINAL ON STUD AND TORQUE TERMINAL LUG NUT TO VALUE IN TABLE BELOW WHILE HOLDING NUT C
3. MAKE SURE THAT TERMINAL STUD DOES NOT TURN WHILE TORQUING TERMINAL LUG NUT

TERMINAL TORQUING SPEC.

COMP MODEL	TERMINAL LUG NUTS
102	3 LB. FT.
127	15 LB. FT.
163, 204	20 LB. FT.
255	30 LB. FT.

DCM 68

KEEP VALVES CLOSED EXCEPT WHEN READING GAUGES

CAUTION — PLT 2224

IMPORTANT APPLICATION MOTOR INFORMATION

1. THE OVERLOADS PROTECTING THIS MOTOR MUST BE SET TO TRIP AT OR BELOW THE MAXIMUM CONTINUOUS CURRENT (AMPERE) RATING STAMPED HERE _____
2. THE STARTER AND OVERLOADS MUST CONFORM TO DUNHAM-BUSH SPECIFICATION ES-ELC-9
3. NO CONTROLS, MANUAL OR AUTOMATIC WHICH WILL START OR STOP THE MOTOR INDEPENDENTLY OF THE UNIT CONTROL CIRCUIT AND OR BYPASS THE ANTI-RECYCLE TIMER ARE ALLOWED
4. MAXIMUM VOLTAGE UNBALANCE ALLOWED AT THE COMPRESSOR MOTOR TERMINALS IS 1%
5. MAXIMUM VOLTAGE TOLERANCE IS ±10% OF STAMPED COMPRESSOR NAMEPLATE VOLTAGE MEASURED AT THE COMPRESSOR MOTOR TERMINALS
6. FAILURE TO ADHERE TO THE ABOVE WILL VOID THE WARRANTY

DUNHAM-BUSH

AIR CONDITIONING, REFRIGERATION, HEATING PRODUCTS AND ACCESSORIES

MAIN OFFICES

175 SOUTH STREET WEST HARTFORD, CONNECTICUT 06110

FACTORIES

WEST HARTFORD DIVISION
179 South Street
West Hartford, Connecticut
06110

HARRISONBURG DIVISION
101 Burgess Road
Harrisonburg, Virginia
22801

MARSHALLTOWN DIVISION
811 East Main Street
Marshalltown, Iowa
50158

RIVERSIDE DIVISION
1850 Massachusetts Ave.
Riverside, California
92507

SUBSIDIARIES

DUNHAM-BUSH of Canada Limited
140 Wendell Avenue
Weston, Ontario

DUNHAM-BUSH, LTD.
Fitzherbert Road, Farlington
Portsmouth, Hampshire, England

DUNHAM-BUSH INTERNATIONAL: 175 South Street, West Hartford, Connecticut 06110, U.S.A.
CABLE: DUNBUSH or TELEX: 994469

SALES OFFICES

ALABAMA
Birmingham
Mobile

ARIZONA
Phoenix

ARKANSAS
Little Rock

CALIFORNIA
Arcadia
Los Angeles
San Diego
San Francisco

COLORADO
Denver

CONNECTICUT
Hartford
New Haven

FLORIDA
Jacksonville
Miami
Orlando
Tampa

GEORGIA
Atlanta

HAWAII
Honolulu

ILLINOIS
Chicago
Peoria
Rockford

INDIANA
Indianapolis
Michigan City

IOWA
Des Moines

KANSAS
Lenexa

KENTUCKY
Louisville

LOUISIANA
New Orleans
Shreveport

MAINE
Lewiston

MARYLAND
Baltimore
Silver Spring

MASSACHUSETTS
Boston
Springfield

MICHIGAN
Detroit
Grand Rapids
Kalamazoo

MINNESOTA
Minneapolis

MISSISSIPPI
Jackson

MISSOURI
Kansas City
St. Louis

MONTANA
Billings
Great Falls

NEBRASKA
Omaha

NEW JERSEY
Little Falls
South Amboy
Union

NEW MEXICO
Albuquerque

NEW YORK
Albany
Buffalo
New York City
Rochester
Syracuse

NORTH CAROLINA
Charlotte
Greensboro

OHIO
Akron
Cincinnati
Cleveland
Columbus
Dayton
Delaware
Toledo

OKLAHOMA
Oklahoma City
Tulsa

OREGON
Portland

PENNSYLVANIA
Harrisburg
Philadelphia
Pittsburgh
Pittston

RHODE ISLAND
Providence

SOUTH CAROLINA
Columbia
Greenville

TENNESSEE
Chattanooga
Memphis
Knoxville
Nashville

TEXAS
Austin
Corpus Christie
Dallas
El Paso
Fort Worth
Houston
Lubbock
San Antonio

UTAH
Salt Lake City

VIRGINIA
Alexandria
Richmond

WASHINGTON
Seattle
Spokane

WEST VIRGINIA
Barboursville

WISCONSIN
Milwaukee

DUNHAM-BUSH, INC. • West Hartford, Connecticut 06110, U.S.A.

6139B-10M-1174A-1278B

one of The Signal Companies

Exhibit E-6

FORM NO. 2505B

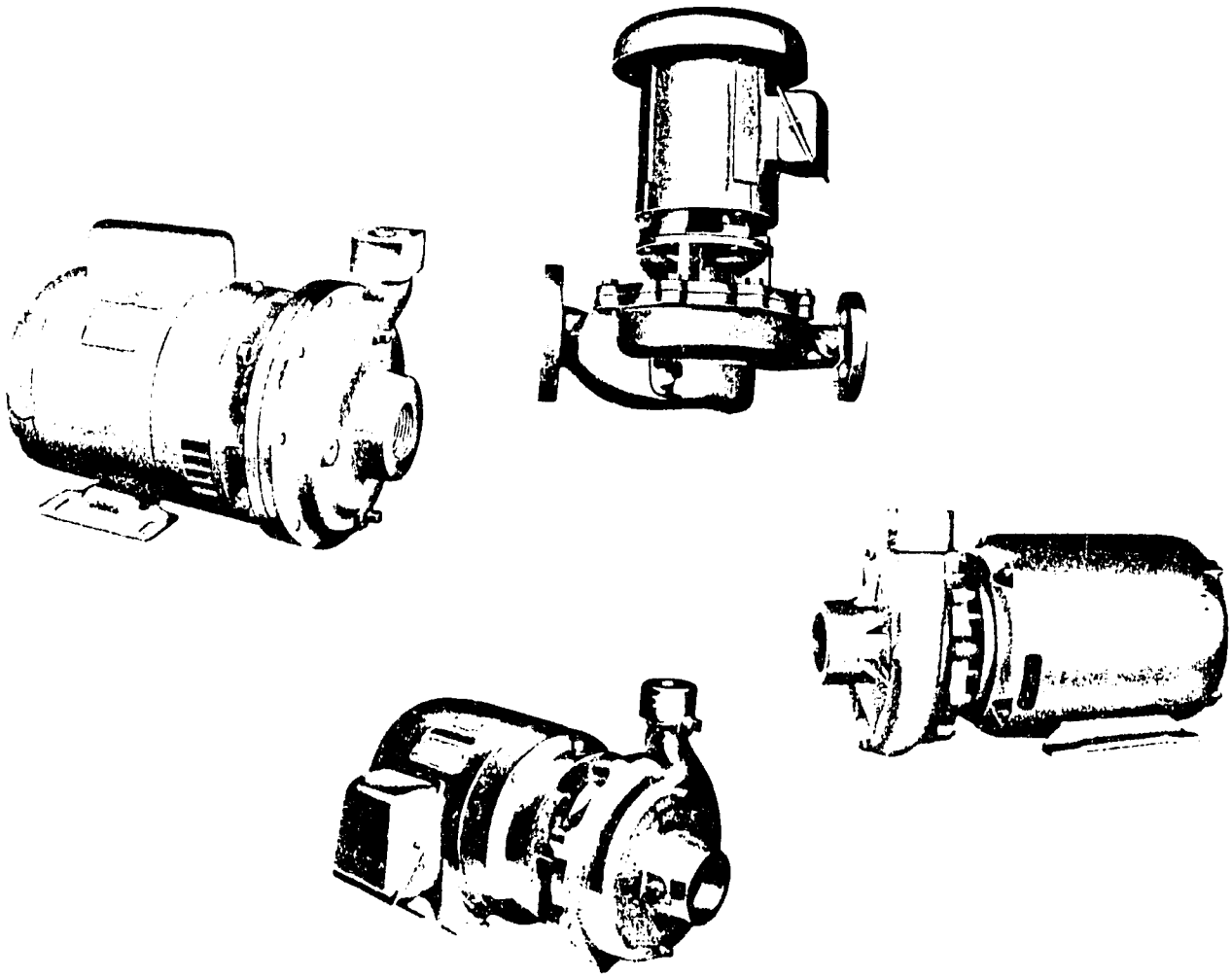

DUNHAM-BUSH

CENTRIFUGAL PUMPS

TYPE A5, A7, A9 AND PM7

PARTS SELECTION LIST

INDEX

Pg.

NOMENCLATURE 1
ORDERING PROCEDURE 1
A5 PUMPS
1/3 HP, 1/2 HP AND 3/4 HP 2
1 HP, 1-1/2 HP AND 2 HP 3
A9 PUMPS AND PARTS LIST
1/2 HP, 3/4 HP AND 1 HP 4
1 1/2 HP 5
2 HP 6–7
3 HP 8
5 HP 9
7 1/2 HP 10
10 HP AND 15 HP 11
SERIES A A9 PUMPS
1/2 HP, 3/4 HP AND 1 HP 12
1-1/2 HP 13
2 HP 14
3 HP 15
5 HP 16
7-1/2 HP 17
10 AND 15 HP 18
A7 PUMPS
3/4", 1-1/4" AND 1-1/2" DISCHARGE 19
2" AND 2-1/2" DISCHARGE 20
PM7 PUMPS
1", 1-1/4" AND 1-1/2" DISCHARGE 21
2" AND 2-1/2" DISCHARGE 22
A7A PUMPS
3/4", 1-1/4 " AND 1-1/2" DISCHARGE 23
PM7A PUMPS
1", 1-1/4" AND 1-1/2" DISCHARGE 24

DUNHAM-BUSH RESERVES THE RIGHT TO MAKE CHANGES IN SPECIFICATIONS AND DESIGN WITHOUT NOTICE.

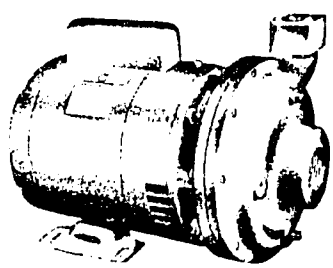

TYPE A5 PUMP

TYPE A7A AND A7 PUMPS

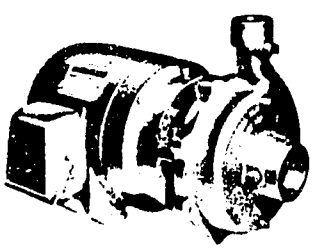

TYPE A9 PUMP

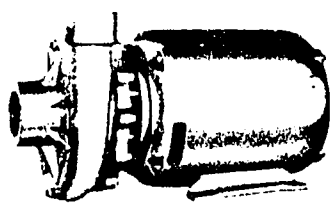

TYPE PM7 AND PM7A PUMPS

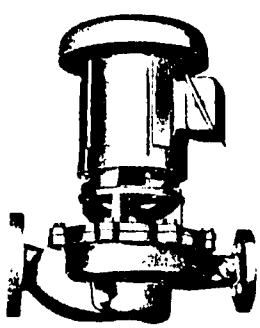

NOMENCLATURE

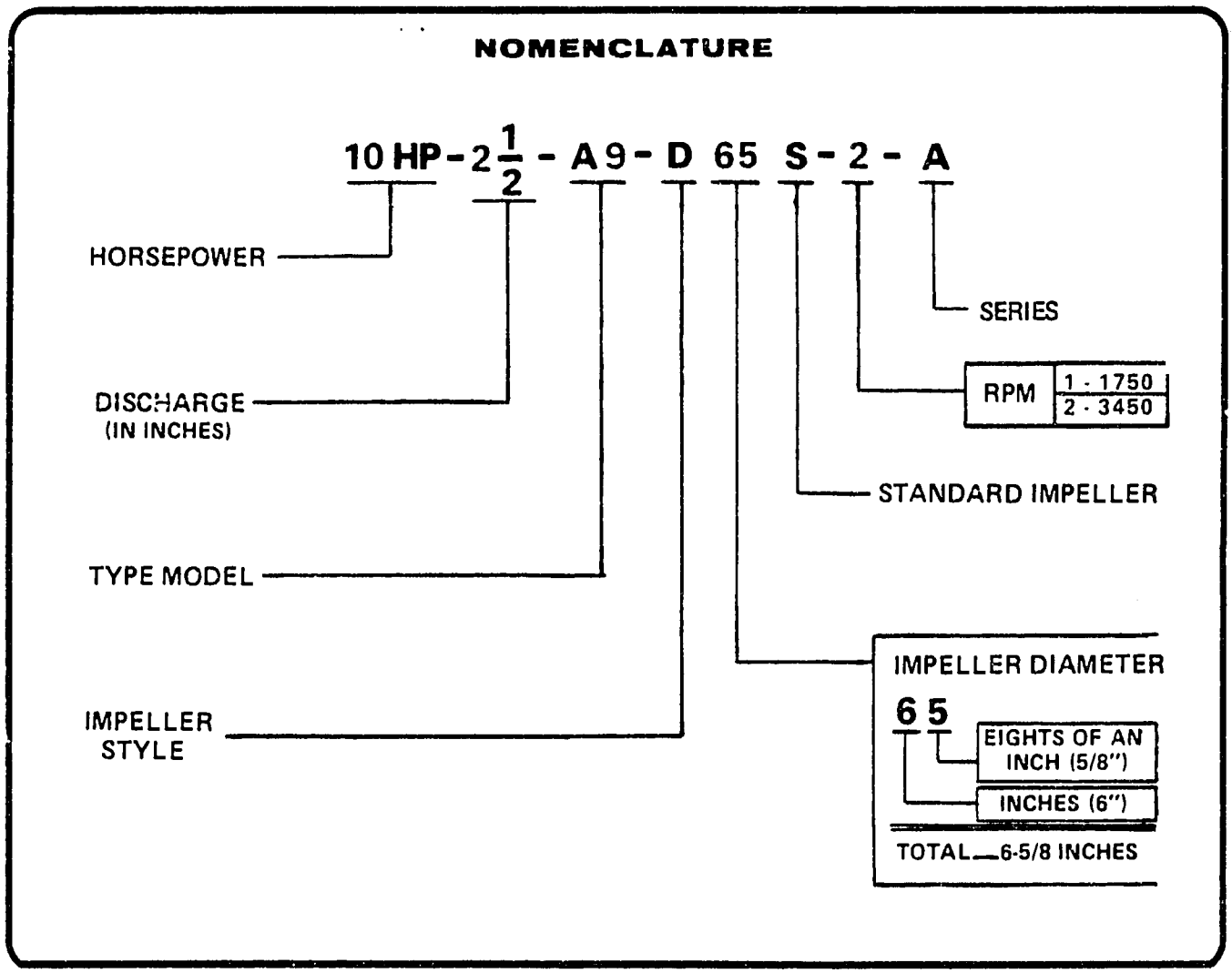

ORDERING PROCEDURE

1. Complete part number and description is required when ordering.
2. When a part number is not known or shown in the parts catalog, the complete model and serial number of the unit on which the part is to be used must be given.
3. Send all orders to:

   DUNHAM-BUSH, INC., PARTS DEPT.
   811 E. MAIN ST.
   MARSHALLTOWN, IOWA, 50158

4. Prices can be found in the latest revision of Form 17448 and are for one item or kit as applicable.
5. Minimum billing is $25.00.
6. All prices are subject to federal, state, local or other taxes which may be applicable.
7. All orders requiring **special handling** will have a surcharge of $25.00 or the actual cost of this requirement whichever is greater.
8. Dunham-Bush reserves the right to substitute parts if they are interchangeable with those ordered. The invoice will reflect the cost of the actual part shipped.

9 Refer to latest revision of Form 17448 for prices.

10 Refer to the latest revision of Form 1278 for terms of sale.

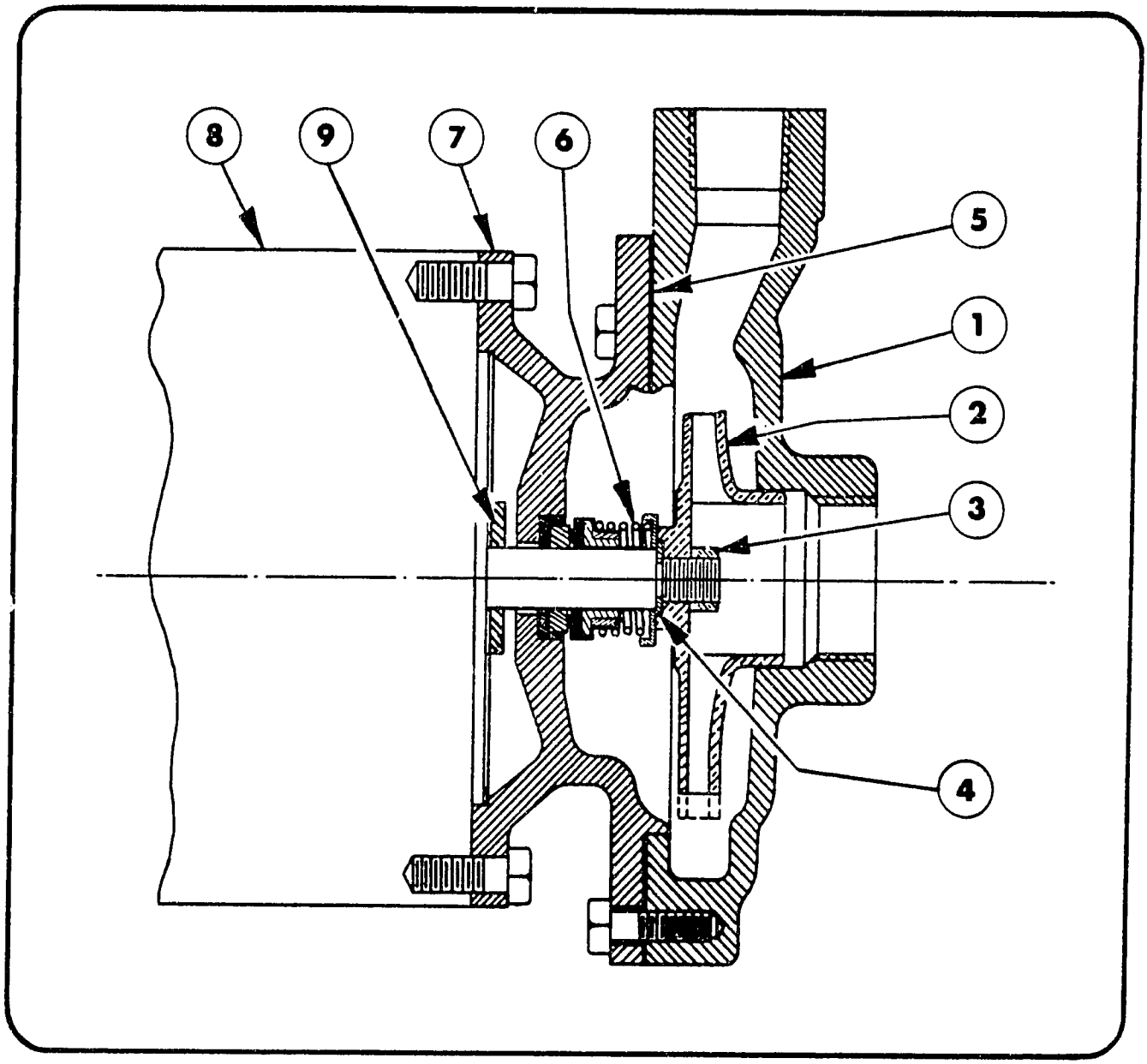

A5 PUMP AND PARTS LIST

1/3 HP, 1/2 HP AND 3/4 HP

	PART NUMBER AND DESCRIPTION	1/3 HP 1" 1φ & 3φ A5C2	1/3 HP 1 1/2" 1φ & 3φ A5C2	1/2 HP 1" 1φ & 3φ A5C2	1/2 HP 1 1/2" 1φ & 3φ A5C2	3/4 HP 3/4" 1φ & 3φ A5C2	3/4 HP 1 1/2" 1φ & 3φ A5C2
1	CASE (CAST IRON) CASE (BRONZE)	E6046 E6078	E6048 E6080	E6045 E6078	E6048 E6080	E6041 E6077	E6048 E6080
2	IMPELLER	D5197x 3 15/16"	D5203x 3 1/4"	D5197x 4 5/16"	D5203x 3 5/8"	D5193x 4 5/16"	D5203x 4 3/32"
3	NUT - IMPELLER	P-116	P-116	P-116	P-116	P-116	P-116
4	WASHER	C8709	C8709	C8709	C8709	C8709	C8709
5	GASKET-CASE *	D5352	D5352	D5352	D5352	D5352	D5352
6	SEAL-SHAFT *	472	472	472	472	472	472
7	HEAD (CAST IRON) HEAD (BRONZE)	E6042 E6081	E6042 E6081	E6042 E6081	E6042 E6081	E6042 E6081	E6042 E6081
8	MOTOR	Contact Dunham-Bush, Inc., Marshalltown, Iowa					
9	SLINGER	C8854	C8854	C8854	C8854	C8854	C8854

NOTES: 1. NON-STANDARD pump parts are not shown. When ordering repair parts, refer to page 1 of this catalog.
2. * = These parts are required when replacing shaft seal.

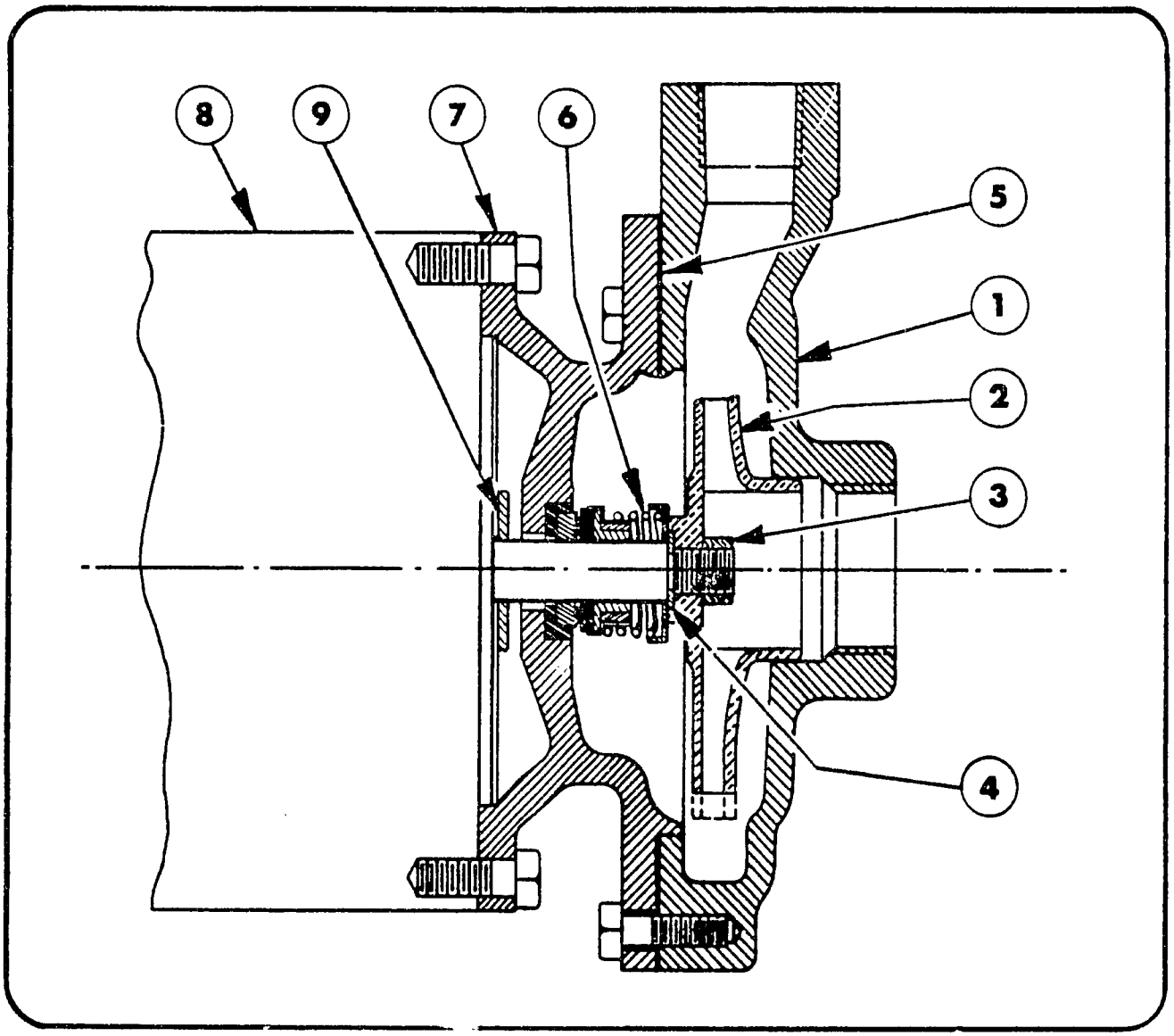

A5 PUMP AND PARTS LIST

1 HP, 1½ HP AND 2 HP

	PART NUMBER AND DESCRIPTION	1 HP ¾" 1ϕ & 3ϕ A5A2	1 HP 1½" 1ϕ & 3ϕ A5C2	1½ HP ¾" 1ϕ & 3ϕ A5A2	1½ HP 1¼" 1ϕ & 3ϕ A5B2	2 HP 1" 1ϕ & 3ϕ A5A2	2 HP 1¼" 1ϕ & 3ϕ A5B2	2 HP 1½" 1ϕ & 3ϕ A5B2
1	CASE (CAST IRON) CASE (BRONZE)	E6041 E6077	E6048 E6080	E6041 E6077	E6047 E6079	E6046 E6078	E6047 E6079	E6048 E6080
2	IMPELLER	D5193x 4 9/16"	D5203x 4 5/16"	D5193x 5"	D5199x 4 1/8"	D5195x 4 1/2"	D5199x 4 1/2"	D5202x 4 1/8"
3	NUT–IMPELLER	P-116	P-116	P-116	P-116	P-116	P-116	P-116
4	WASHER	C8709	C3709	C8709	C8709	C8709	C8709	C8709
5	GASKET–CASE *	D5352	D5352	D5352	D5352	D5352	D5352	D5352
6	SEAL–SHAFT *	472	472	472	472	472	472	472
7	HEAD (CAST IRON) HEAD (BRONZE)	E6042 E6081	E6042 E6081	E6042 E6081	E6042 E6081	E6042 E6081	E6042 E6081	E6042 E6081
8	MOTOR	Contact Dunham-Bush, Inc., Marshalltown, Iowa						
9	SLINGER	C8854	C8854	C8854	C8854	C8854	C8854	C8854

NOTES: 1. NON-STANDARD pump parts are not shown. When ordering repair parts, refer to page 1 of this catalog.
2. * = These parts are required when replacing shaft seal.

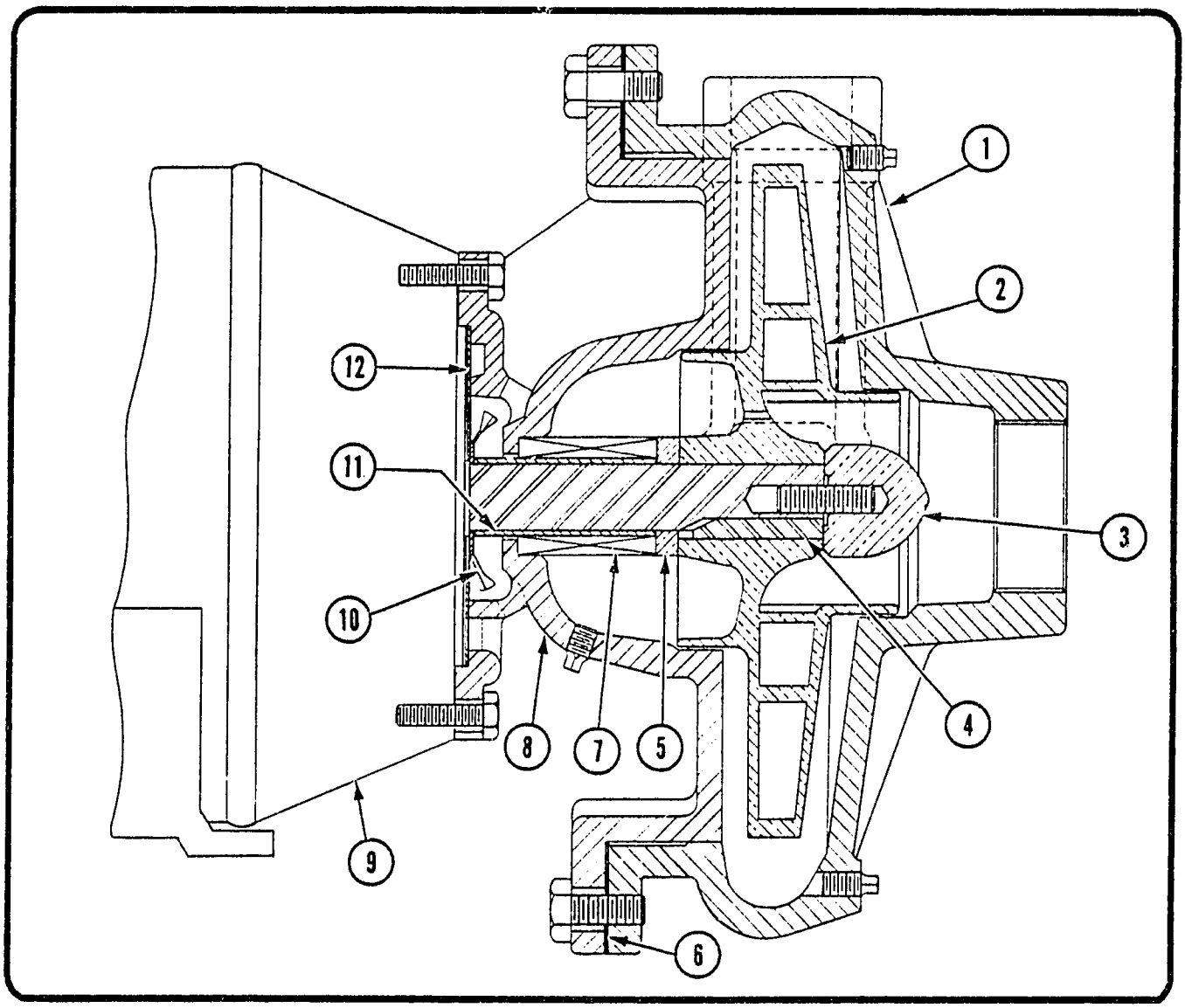

A9 PUMP AND PARTS LIST—½ HP, ¾ HP AND 1 HP

	PART	½ HP 1" 1ϕ & 3ϕ A9C1	¾ HP 1" 1ϕ & 3ϕ A9C1	¾ HP 1¼" 1ϕ & 3ϕ A9D1	1 HP 1" 1ϕ & 3ϕ A9C1	1 HP 1¼" 1ϕ & 3ϕ A9D1	1 HP 2" 1ϕ & 3ϕ A9D1
1	*CASE (CAST IRON) *CASE (BRONZE)	F541 D2-76	F541 D2-76	F540 D2-74	F541 D2-76	F540 D2-74	F544 D2-80
2	IMPELLER	C2-73x 6 1/16"	C2-73x 6 3/16"	E6181x 4 15/16"	C2-73x 7 3/16"	E6181x 5 15/32"	E6188x 5 3/8"
3	STUD & NUT ASSEMBLY	C10035 C8938	C10035 C8938	C10035 C8938	C10035 C8938	C10035 C8938	C10035 C8938
4	KEY	C10025	C10025	C10025	C10025	C10025	C10025
5	SEAL SPACER	C10060	C10060	C10060	C10060	C10060	C10060
6	GASKET	D5450	D5450	D5450	D5450	D5450	D5450
7	SHAFT SEAL	860	860	860	860	860	860
8	*HEAD (CAST IRON) *HEAD (BRONZE)	F539 D2-77	F539 D2-77	F539 D2-77	F539 D2-77	F539 D2-77	F539 D2-77
9	MOTOR	Contact Dunham-Bush, Inc., Marshalltown, Iowa					
10	SLINGER	C10037	C10037	C10037	C10037	C10037	C10037
11	SLEEVE	C10062	C10062	C10062	C10062	C10062	C10062
12	SHIELD	C8958	C8958	C8958	C8958	C8958	C8958

NOTE NON-STANDARD repair parts are not shown, when ordering furnish serial number. Complete ordering instructions are found on Page 1.

* When replacing item No. 8, head, before serial number 6605, item No. 1, case, must also be replaced.

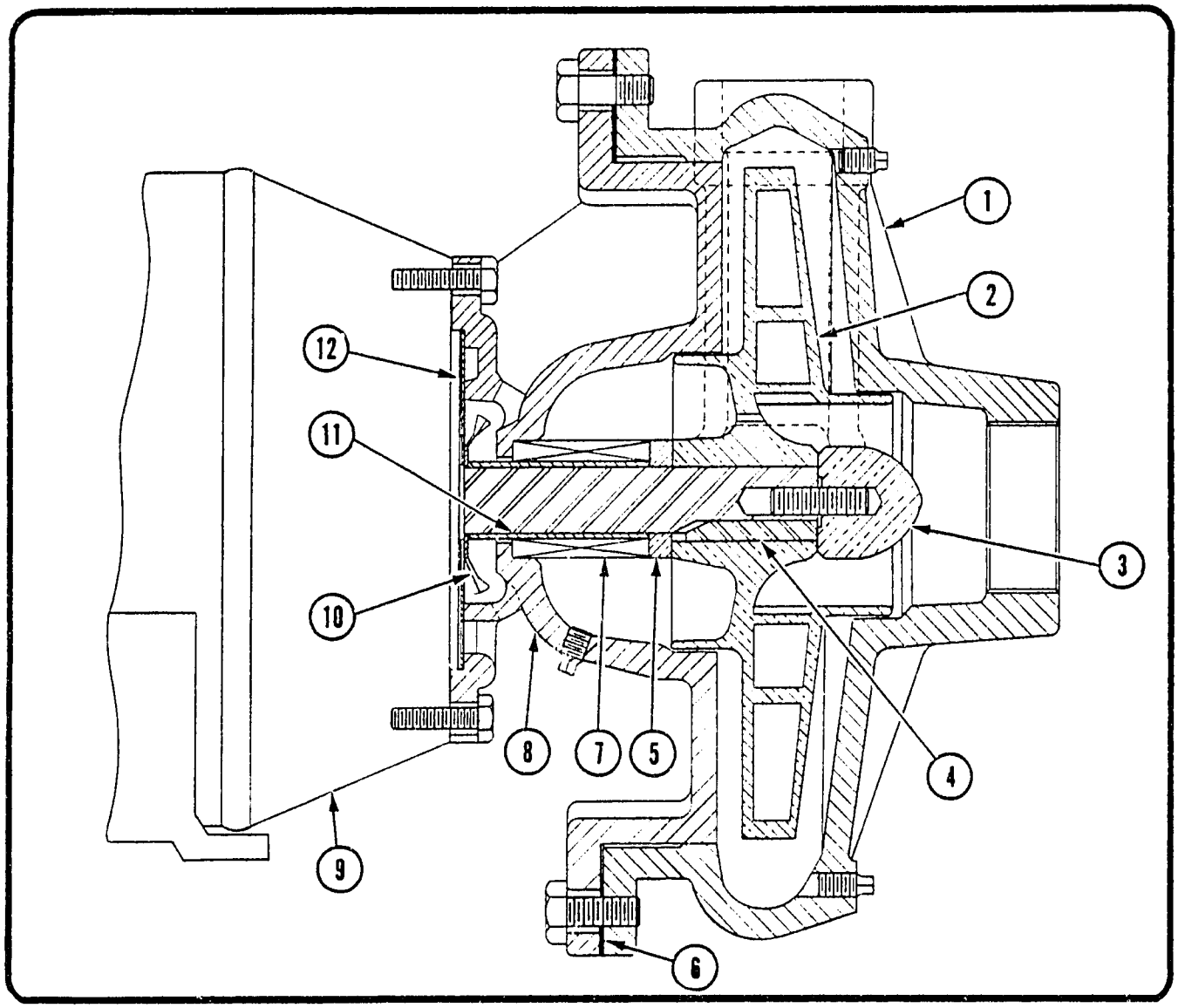

A9 PUMP AND PARTS LIST - 1½ HP

	PART	1½ HP 1" 1φ & 3φ A9C1	1½ HP 1¼" 1φ & 3φ A9D1	1½ HP 2" 1φ & 3φ A9D1	1½ HP 2½" 1φ & 3φ A9E2	1½ HP 2½" 1φ & 3φ A9D1
1	*CASE (CAST IRON) *CASE (BRONZE)	F541 D2-76	F540 D2-74	F544 D2-80	F545 D2-79	F545 D2-79
2	IMPELLER	C2-73x 8 7/16"	E6181x 6 3/8"	E6188x 5 29/32"	E6184x 3 13/16"	E6204x 5 31/32"
3	STUD & NUT ASSEMBLY	C10035 C8938	C10035 C8938	C10035 C8938	C10035 C8938	C10035 C8938
4	KEY	C10025	C10025	C10025	C10025	C10025
5	SEAL SPACER	C10060	C10060	C10060	C10060	C10060
6	GASKET	D5450	D5450	D5450	D5450	D5450
7	SHAFT SEAL	860	860	860	860	860
8	*HEAD (CAST IRON) *HEAD (BRONZE)	F539 D2-77	F539 D2-77	F539 D2-77	F539 D2-77	F539 D2-77
9	MOTOR	Contact Dunham-Bush, Inc., Marshalltown, Iowa				
10	SLINGER	C10037	C10037	C10037	C10037	C10037
11	SLEEVE	C10062	C10062	C10062	C10062	C10062
12	SHIELD	C8958	C8958	C8958	C8958	C8958

NOTE: NON-STANDARD repair parts are not shown, when ordering furnish serial number. Complete ordering instructions are found on Page 1.

*When ordering case for 2½" A9E, also show A2-51 Adapter, which must be pressed in the case.

*When replacing item No. 8, head, before serial number 6605, item No. 1, case, must also be replaced.

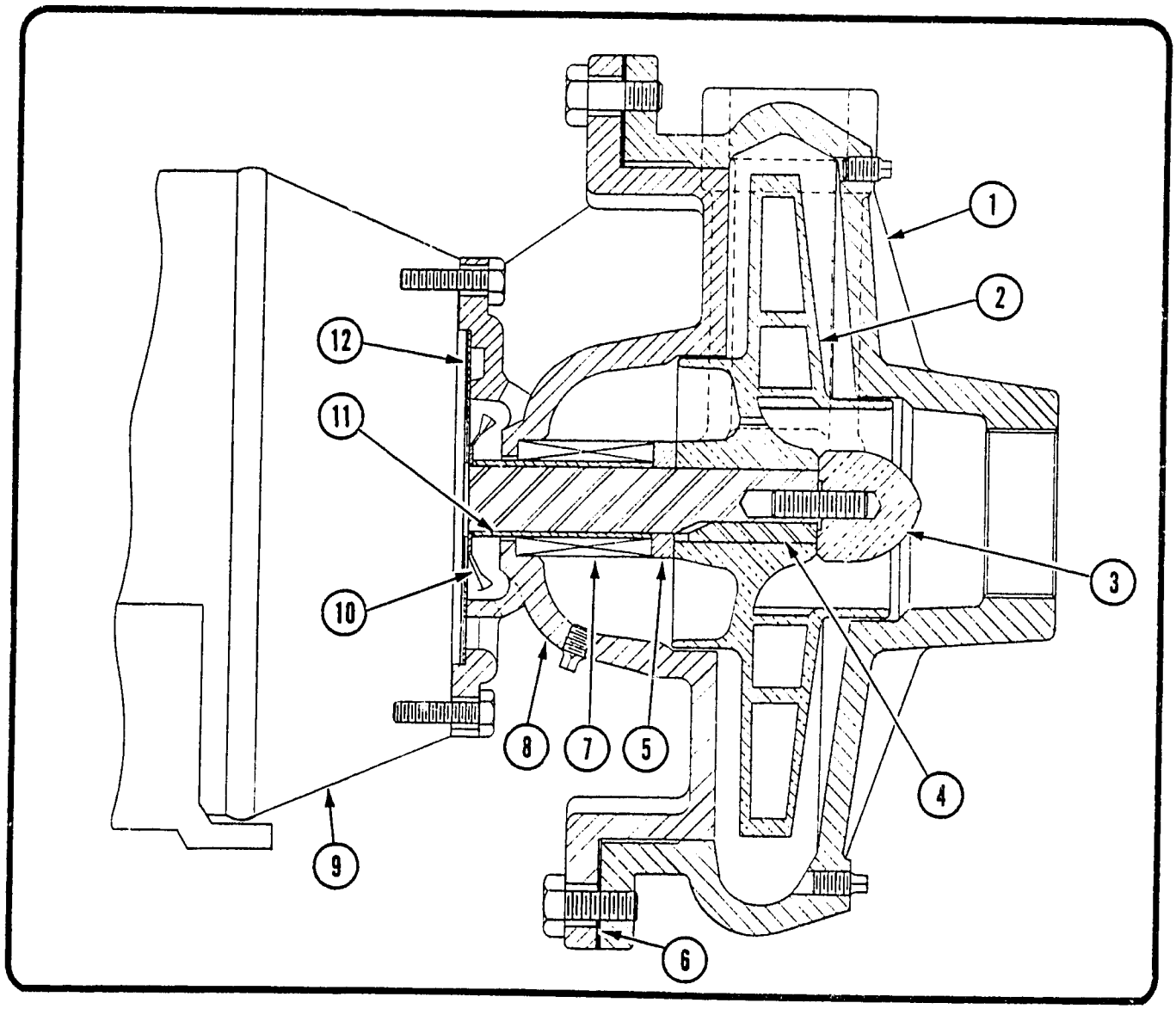

A9 PUMP AND PARTS LIST -- 2 HP

PART	2 HP 1" 1ϕ A9C1	2 HP 1" 3ϕ A9C1	2 HP 1¼" 1ϕ A9D1	2 HP 1¼" 3ϕ A9D1
1 *CASE (CAST IRON) *CASE (BRONZE)	F541 D2-76	F541 D2-76	F540 D2-74	F540 D2-74
2 IMPELLER	C2-73x 9"	C2x73x 9"	E6181x 7 3/16"	E6181x 7 3/16"
3 STUD & NUT ASSEMBLY	C10035 C8938	C10035 C8938	C10035 C8938	C10035 C8938
4 KEY	C10025	C10025	C10025	C10025
5 SEAL SPACER	C10061	C10060	C10061	C10060
6 GASKET	D5450	D5450	D5450	D5450
7 SHAFT SEAL	861	860	861	860
8 *HEAD (CAST IRON) *HEAD (BRONZE)	F546 D2-77	F539 D2-77	F546 D2-78	F539 D2-77
9 MOTOR	Contact Dunham-Bush, Inc., Marshalltown, Iowa			
10 SLINGER	C10038	C10037	C10038	C10037
11 SLEEVE	C10063	C10062	C10063	C10062
12 SHIELD	D5478	C8958	D5478	C8958

NOTE: NON-STANDARD repair parts are not shown, when ordering furnish serial number. Complete ordering instructions are found on Page 1.

* When replacing item No. 8, head, before serial number 6605, item No. 1, case, must also be replaced.

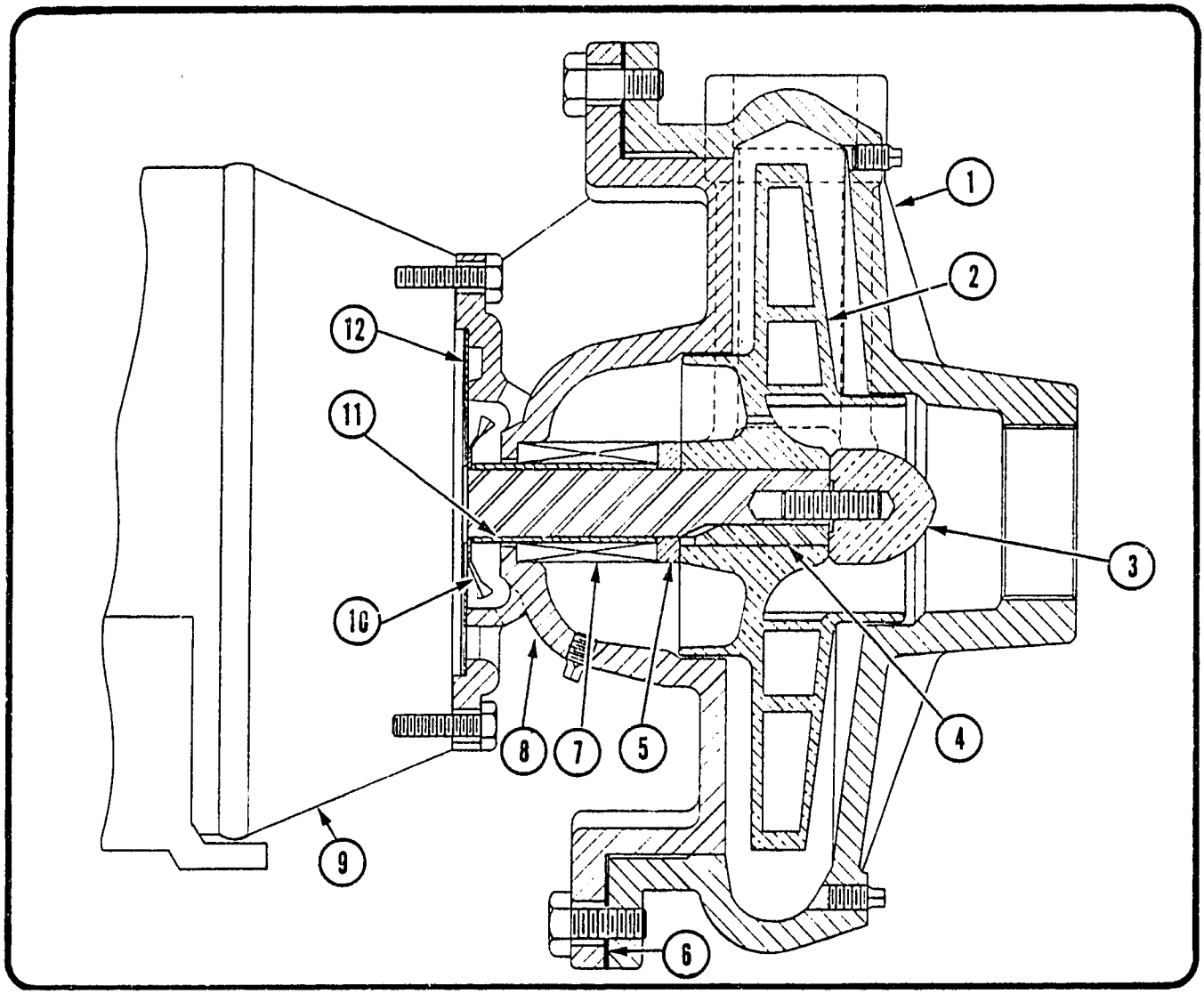

A9 PUMP AND PARTS LIST — 2 HP

	PART	2 HP 2" 1ϕ A9D1	2 HP 2" 3ϕ A9D1	2 HP 2½" 1ϕ A9D1	2 HP 2½" 3ϕ A9D1	2 HP 2½" 1ϕ & 3ϕ A9E2
1	*CASE (CAST IRON) *CASE (BRONZE)	F544 D2-80	F544 D2-80	F545 D2-79	F545 D2-79	F545 D2-79
2	IMPELLER	E6188x 6½"	E6188x 6½"	E6204x 6⅛"	E6204x 6⅛"	E6184x 3 15/16"
3	STUD & NUT ASSEMBLY	C10035 C8938	C10035 C8938	C10035 C8938	C10035 C8938	C10035 C8938
4	KEY	C10025	C10025	C10025	C10025	C10025
5	SEAL SPACER	C10061	C10060	C10061	C10060	C10060
6	GASKET	D5450	D5450	D5450	D5450	D5450
7	SHAFT SEAL	861	860	861	860	860
8	*HEAD (CAST IRON) *HEAD (BRONZE)	F546 D2-78	F539 D2-77	F546 D2-79	F539 D2-79	F539 D2-77
9	MOTOR	Contact Dunham-Bush, Inc., Marshalltown, Iowa				
10	SLINGER	C10038	C10037	C10038	C10037	C10037
11	SLEEVE	C10063	C10062	C10063	C10062	C10062
12	SHIELD	D5478	C8958	D5478	C8958	C8958

NOTE: NON-STANDARD repair parts are not shown, when ordering furnish serial number. Complete ordering instructions are found on Page 1.
*When ordering case for 2½" A9E, also show A2-51 Adapter, which must be pressed in the case.
When replacing item No. 8, head, before serial number 6605, item No. 1, case, must also be replaced.

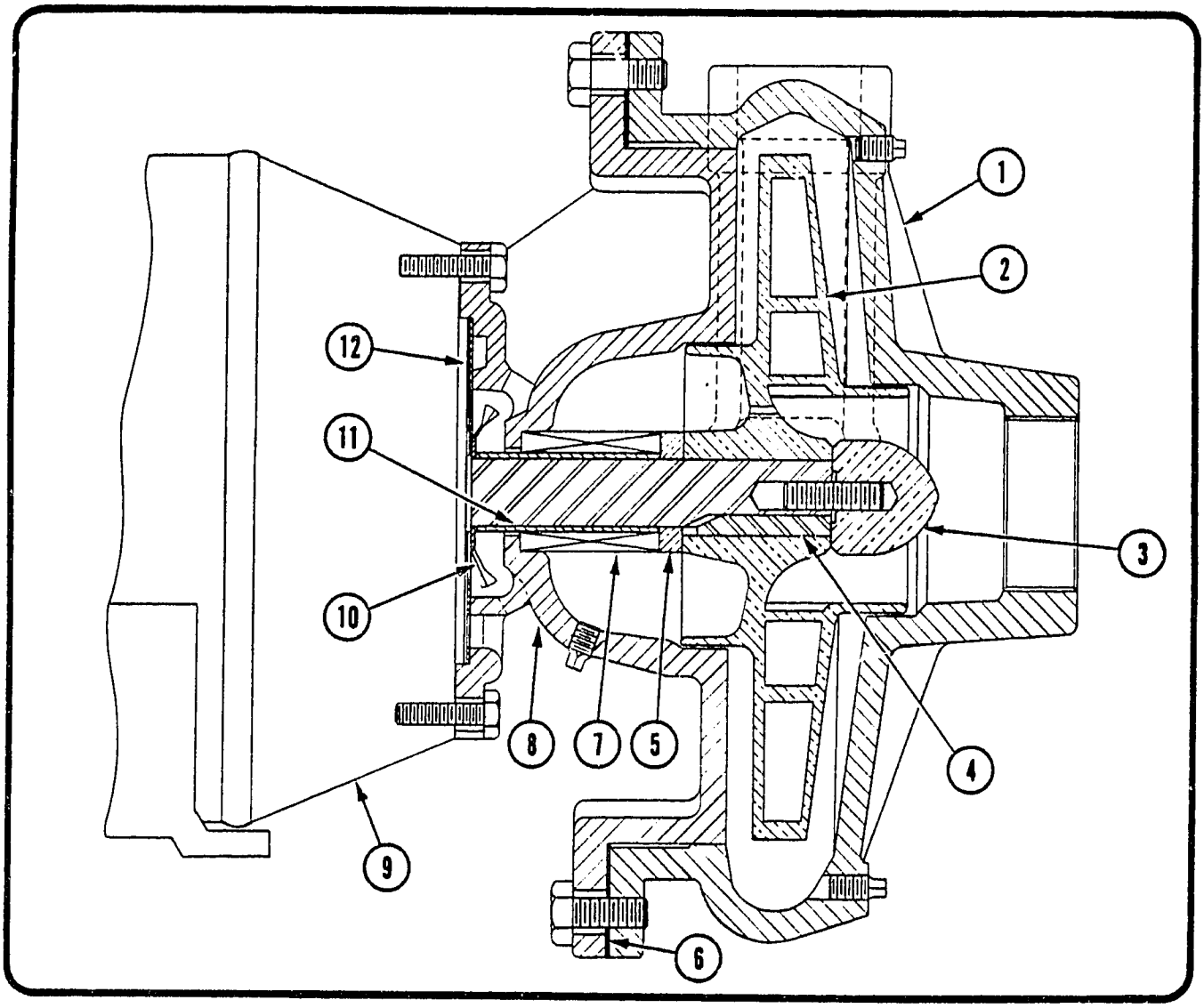

A9 PUMP AND PARTS LIST – 3 HP

	PART	3 HP 1" 3ϕ A9D2	3 HP 1" 3ϕ A9C2	3 HP 1¼" 3ϕ A9D1	3 HP 1¼" 3ϕ A9D2	3 HP 2" 3ϕ A9D1	3 HP 2½" 3ϕ A9D1	3 HP 2½" 3ϕ A9E2
1	*CASE (CAST IRON) *CASE (BRONZE)	F541 D2-76	F541 D2-76	F540 D2-74	F540 D2-74	F544 D2-80	F545 D2-79	F545 D2-79
2	IMPELLER	E6141x 5¼"	C2-73x 6 1/16"	E6181x 8¼"	E6181x 4 7/16"	E6188x 7 1/16"	E6204x 6¾"	E6184x 4¼"
3	STUD & NUT ASSEMBLY	C10035 C8938	C10035 C8938	C10035 C8938	C10035 C8938	C10035 C8938	C10035 C8938	C10035 C8938
4	KEY	C10025	C10025	C10025	C10025	C10025	C10025	C10025
5	SEAL SPACER	C10060	C10060	C10061	C10060	C10061	C10061	C10060
6	GASKET	D5450	D5450	D5450	D5450	D5450	D5450	D5450
7	SHAFT SEAL	860	860	861	860	861	861	860
8	*HEAD (CAST IRON) *HEAD (BRONZE)	F539 D2-77	F539 D2-77	F546 D2-78	F539 D2-77	F546 D2-78	F546 D2-78	F539 D2-77
9	MOTOR	Contact Dunham-Bush, Inc., Marshalltown, Iowa						
10	SLINGER	C10037	C10037	C10038	C10037	C10038	C10038	C10037
11	SLEEVE	C10062	C10062	C10063	C10062	C10063	C10063	C10062
12	SHIELD	C8958	C8958	D5478	C8958	D5478	D5478	C8958

NOTE: NON-STANDARD repair parts are not shown, when ordering furnish serial number. Complete ordering instructions are found on Page 1.

*When replacing item No. 8, head, before serial number 6605, item No. 1, case, must also be replaced.

661

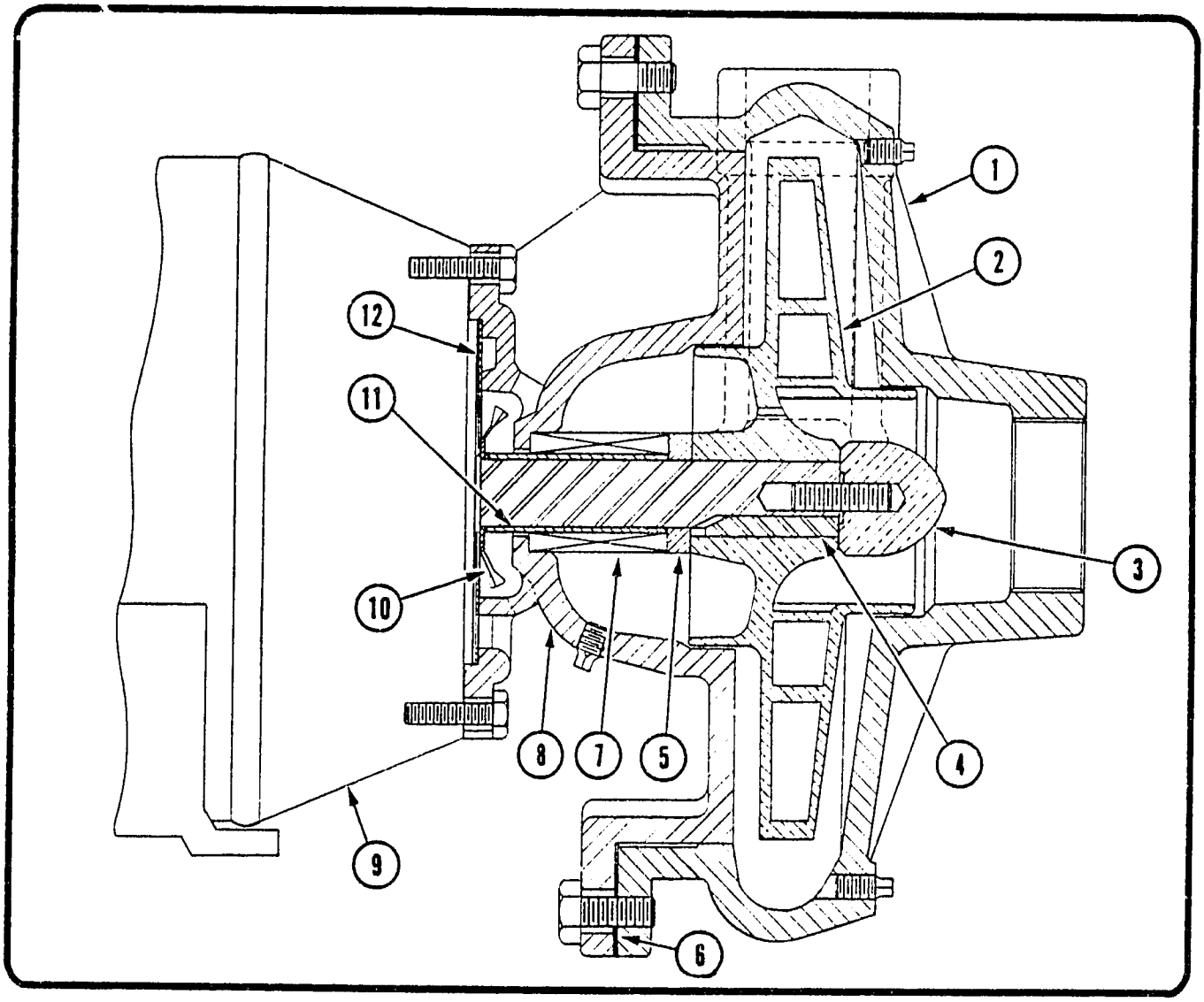

A9 PUMP AND PARTS LIST — 5 HP

	PART	5 HP 1" 3ϕ A9C2	5 HP 1" 3ϕ A9D2	5 HP 1¼" 3ϕ A9D2	5 HP 2" 3ϕ A9D1	5 HP 2" 3ϕ A9D2	5 HP 2½" 3ϕ A9D1	5 HP 2½" 3ϕ A9D2
1	*CASE (CAST IRON) *CASE (BRONZE)	F541 D2-76	F541 D2-76	F540 D2-74	F544 D2-80	F544 D2-80	F545 D2-79	F545 D2-79
2	IMPELLER	C2-73x 6 9/16"	E6141x 5 7/8"	E6181x 5 15/32"	E6188x 8 7/16"	E6188x 4 13/16"	E6204x 7 13/16"	E6204x 4 3/4"
3	STUD & NUT ASSEMBLY	C10035 C8938	C10035 C8938	C10035 C8938	C10035 C8938	C10035 C8938	C10035 C8938	C10035 A2-672
4	KEY	C10025	C10025	C10025	C10025	C10025	C10025	C10025
5	SEAL SPACER	C10061	C10061	C10061	C10061	C10061	C10061	C10061
6	GASKET	D5450	D5450	D5450	D5450	D5450	D5450	D5450
7	SHAFT SEAL	861	861	861	861	861	861	861
8	*HEAD (CAST IRON) *HEAD (BRONZE)	F546 D2-78	F546 D2-78	F546 D2-78	F546 D2-78	F546 D2-78	F546 D2-78	F546 D2-78
9	MOTOR	Contact Dunham-Bush, Inc., Marshalltown, Iowa						
10	SLINGER	C10038	C10038	C10038	C10038	C10038	C10038	C10038
11	SLEEVE	C10063	C10063	C10063	C10063	C10063	C10063	C10063
12	SHIELD	D5478	D5478	D5478	D5478	D5478	D5478	D5478

NOTE: NON-STANDARD repair parts are not shown, when ordering furnish serial number. Complete ordering instructions are found on Page 1.

When replacing item No. 8, head, before serial number 6605, item No. 1, case, must also be replaced.

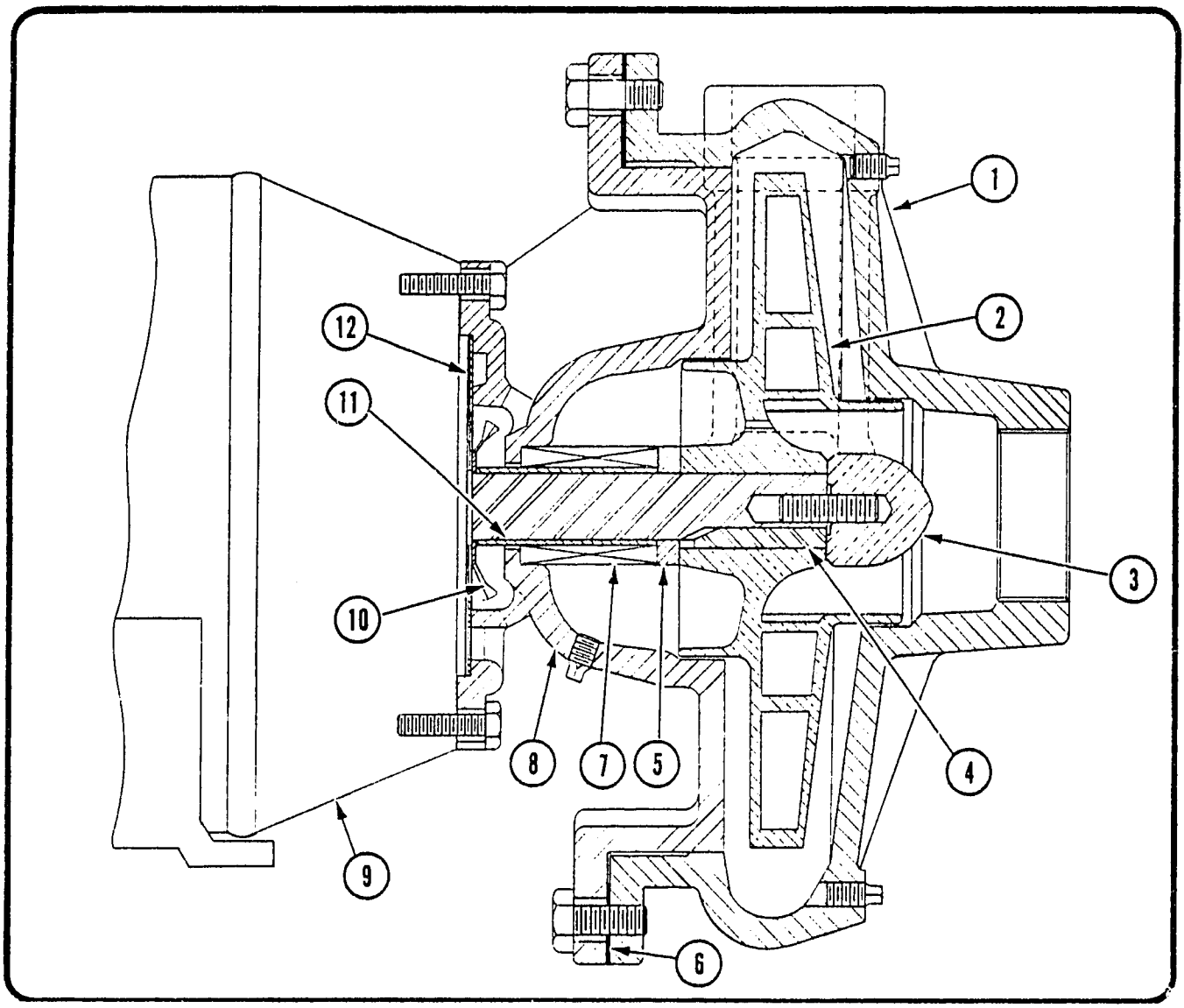

A9 PUMP AND PARTS LIST - 7½ HP

	PART	7½ HP 1¼" 3ϕ A9D2	7½ HP 2" 3ϕ A9D2	7½ HP 2½" 3ϕ A9D1	7½ HP 2½" 3ϕ A9D2
1	*CASE (CAST IRON) *CASE (BRONZE)	F540 D2-74	F544 D2-80	F545 D2-79	F545 D2-79
2	IMPELLER	E6181x 5 13/16"	E6188x 5 9/16"	E6204x 9"	E6204x 5 9/16"
3	STUD & NUT ASSEMBLY	C10035 C8938	C10035 A2-672	C10035 C8938	C10035 A2-672
4	KEY	C10025	C10025	C10025	C10025
5	SEAL SPACER	C10061	C10061	C10061	C10061
6	GASKET	D5450	D5450	D5450	D5450
7	SHAFT SEAL	861	861	861	861
8	*HEAD (CAST IRON) *HEAD (BRONZE)	F546 D2-78	F546 D2-78	F546 D2-78	F546 D2-78
9	MOTOR	Contact Dunham-Bush, Inc., Marshalltown, Iowa			
10	SLINGER	C10038	C10038	C10038	C10038
11	SLEEVE	C10063	C10063	C10063	C10063
12	SHIELD	D5478	D5478	D5478	D5478

NOTE: NON-STANDARD repair parts are not shown, when ordering furnish serial number. Complete ordering instructions are found on Page 1.

*When replacing item No. 8, head, before serial number 6605, item No. 1, case, must also be replaced.

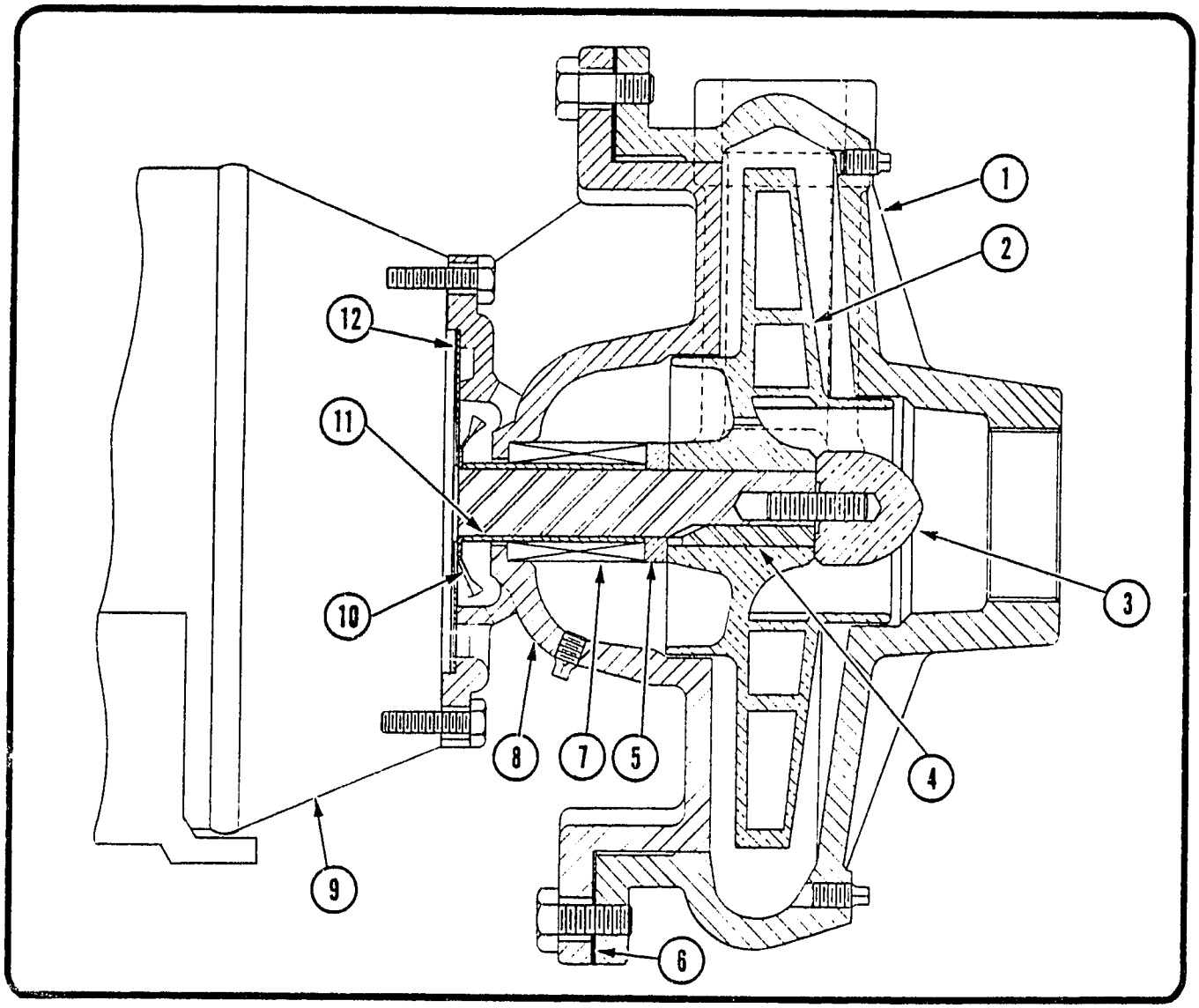

A9 PUMP AND PARTS LIST – 10 HP AND 15 HP

	PART	10 HP 1¼" 3ϕ A9D2	10 HP 2" 3ϕ A9D2	10 HP 2½" 3ϕ A9D2	15 HP 2" 3ϕ A9D2
1	*CASE (CAST IRON) *CASE (BRONZE)	F540 D2-74	F544 D2-80	F545 D2-79	F544 D2-80
2	IMPELLER	E6181x 6⅜"	E6188x 5²⁹⁄₃₂"	E6204x 5²¹⁄₃₂"	E6188x 6⁵⁄₁₆"
3	STUD & NUT ASSEMBLY	C10035 C8938	C10035 A2-672	C10035 A2-672	C10035 A2-672
4	KEY	C10025	C10025	C10025	C10025
5	SEAL SPACER	C10061	C10061	C10061	C10061
6	GASKET	D5450	D5450	D5450	D5450
7	SHAFT SEAL	861	861	861	861
8	*HEAD (CAST IRON) *HEAD (BRONZE)	F546 D2-78	F546 D2-78	F546 D2-78	F546 D2-78
9	MOTOR	Contact Dunham-Bush, Inc., Marshalltown, Iowa			
10	SLINGER	C10038	C10038	C10038	C10038
11	SLEEVE	C10063	C10063	C10063	C10063
12	SHIELD	D5478	D5478	D5478	D5478

NOTE: NON-STANDARD repair parts are not shown, when ordering furnish serial number. Complete ordering instructions are found on Page 1.
*When replacing item No. 8, head, before serial number 6605, item No. 1, case, must also be replaced.

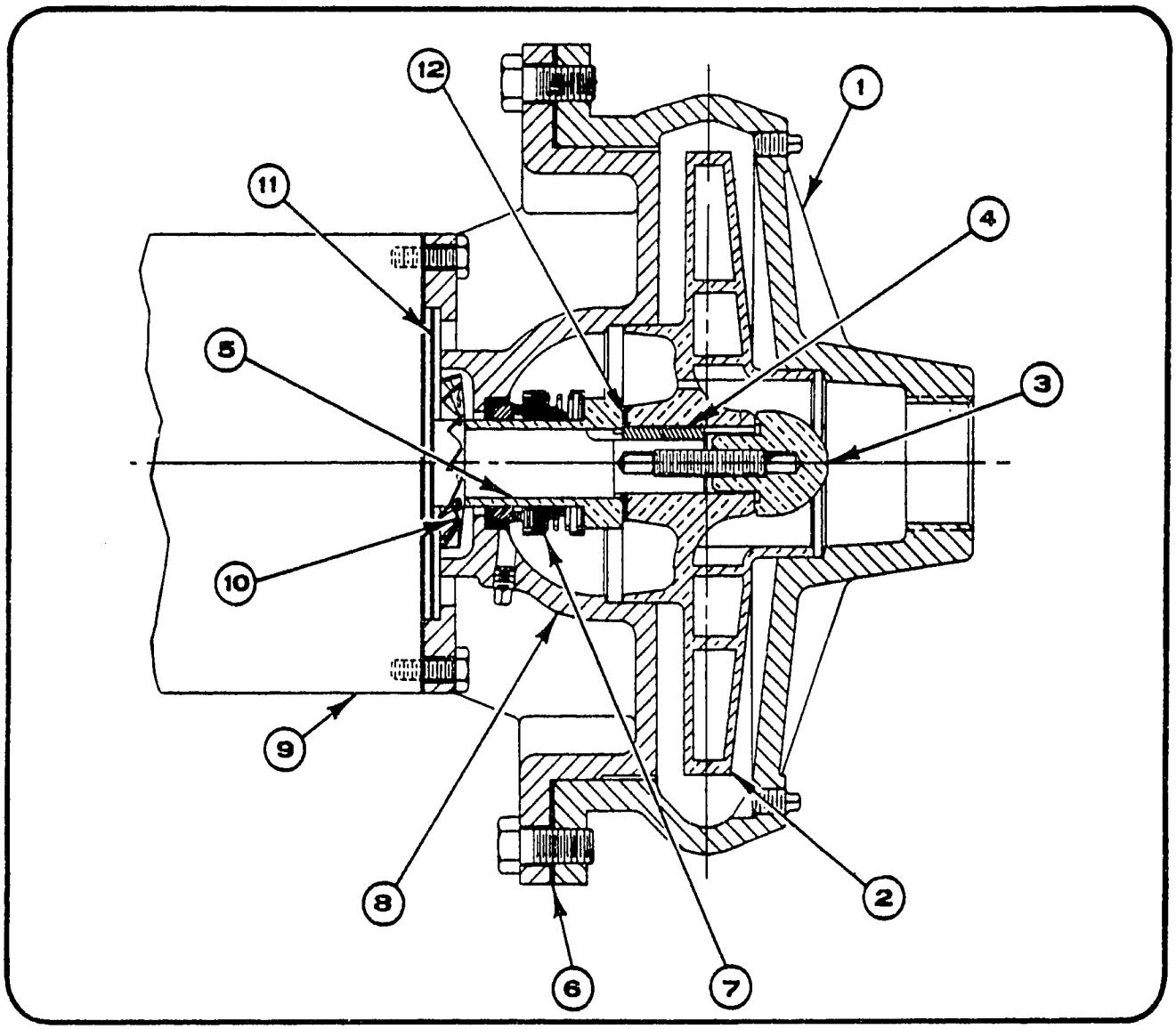

A9 PUMP AND PARTS LIST
SERIES A - ½ HP, ¾ HP AND 1 HP

	PART NUMBER AND DESCRIPTION	½ HP 1" 1ϕ & 3ϕ A9C1A	¾ HP 1" 1ϕ & 3ϕ A9C1A	¾ HP 1¼" 1ϕ & 3ϕ A9D1A	1 HP 1" 1ϕ & 3ϕ A9C1A	1 HP 1¼" 1ϕ & 3ϕ A9D1A	1 HP 2" 1ϕ & 3ϕ A9D1A
1	CASE (CAST IRON) CASE (BRONZE)	F541 D2-76	F541 D2-76	F540 D2-74	F541 D2-76	F540 D2-74	F544 D2-80
2	IMPELLER (BRONZE)	C2-3211X 6 1/16"	C2-3211X 6 3/4"	C2-3213X 4 15/16"	C2-3211X 7 5/16"	C2-3213X 5 15/16"	C2-3214X 5 3/8
3	STUD & NUT ASSEMBLY	C10035 A2-3898	C10035 A2-3898	C10035 A2-3898	C10035 A2-3898	C10035 A2-3898	C10035 A2-3898
4	KEY	C7763	C7763	C7763	C7763	C7763	C7763
5	SLEEVE *	A2-3905	A2-3905	A2-3905	A2-3905	A2-3905	A2-3905
6	GASKET *	D5450	D5450	D5450	D5450	D5450	D5450
7	SHAFT SEAL *	3179	3179	3179	3179	3179	3179
8	HEAD (CAST IRON) HEAD (BRONZE)	D2-1478 D2-1480	D2-1478 D2-1480	D2-1478 D2-1480	D2-1478 D2-1480	D2-1478 D2-1480	D2-1478 D2-1480
9	MOTOR	Contact Dunham-Bush, Inc., Marshalltown, Iowa					
10	SLINGER	C10038	C10038	C10038	C10038	C10038	C10038
11	SHIELD	C8958	C8958	C8958	C8958	C8958	C8958
12	GASKET *	A2-3020	A2-3020	A2-3020	A2-3020	A2-3020	A2-3020

NOTES: 1. NON-STANDARD pump parts are not shown. When ordering repair parts, refer to page 1 of this catalog.
2. * = These parts are required when replacing shaft seal.

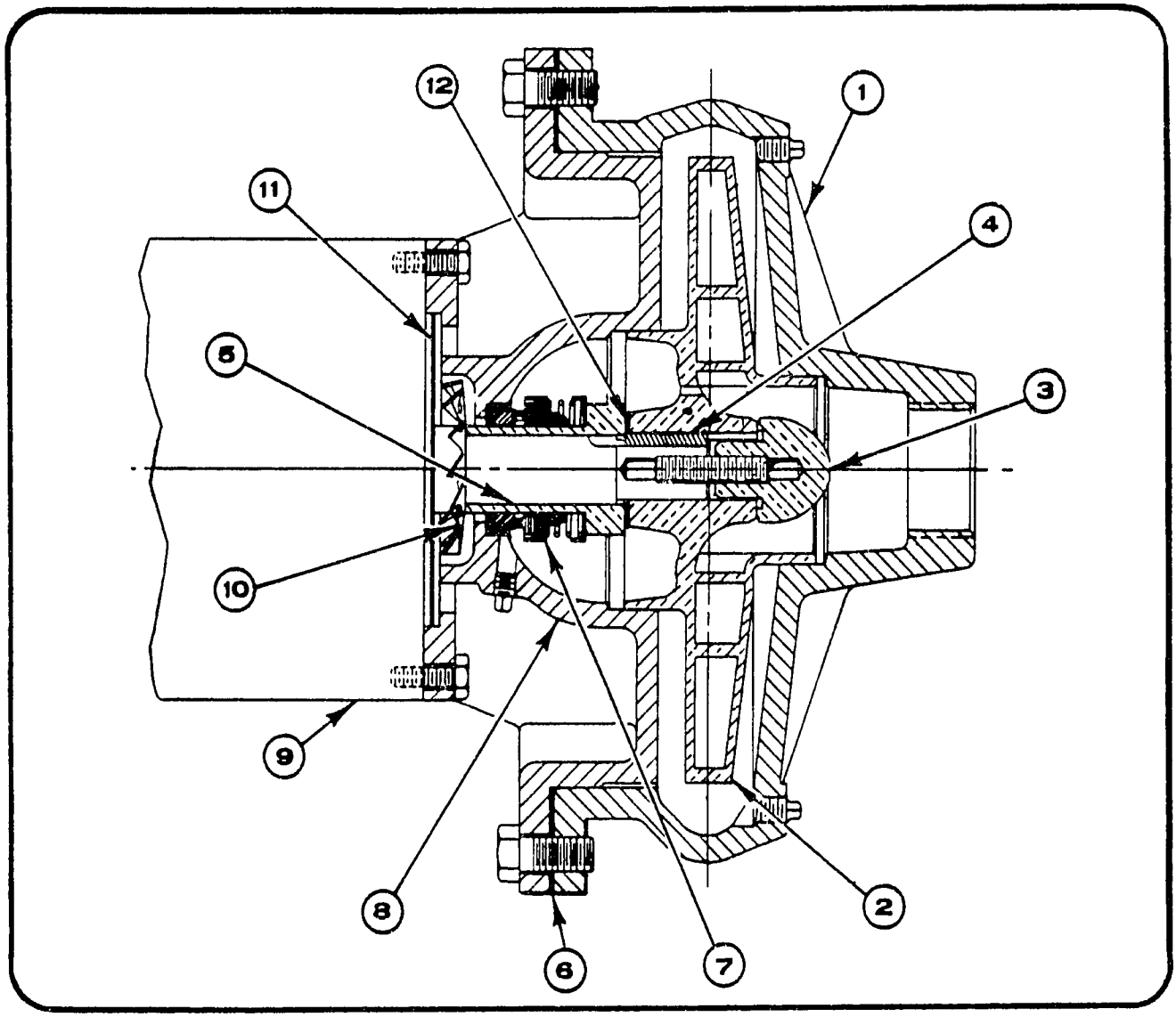

A9 PUMP AND PARTS LIST
SERIES A – 1½ HP

PART NUMBER AND DESCRIPTION	1½ HP 1" 1ϕ & 3ϕ A9C1A	1½ HP 1¼" 1ϕ & 3ϕ A9D1A	1½ HP 2" 1ϕ & 3ϕ A9D1A	1½ HP 2½" 1ϕ & 3ϕ A9D1A
1 CASE (CAST IRON) CASE (BRONZE)	D541 D2-76	F540 D2-74	F544 D2-80	F545 D2-79
2 IMPELLER (BRONZE)	C2-3211X $8^{7}/_{16}$"	C2-3213X $6^{3}/_{8}$"	C2-3214X $5^{29}/_{32}$"	C2-3215X $5^{21}/_{33}$"
3 STUD & NUT ASSEMBLY	C10035 A2-3898	C10035 A2-3898	C10035 A2-3898	C10035 A2-3898
4 KEY	C7763	C7763	C7763	C7763
5 SLEEVE *	A2-3905	A2-3905	A2-3905	A2-3905
6 GASKET *	D5450	D5450	D5450	D5450
7 SHAFT SEAL *	3179	3179	3179	3179
8 HEAD (CAST IRON) HEAD (BRONZE)	D2-1478 D2-1480	D2-1478 D2-1480	D2-1478 D2-1479	D2-1478 D2-1480
9 MOTOR	Contact Dunham-Bush, Inc., Marshalltown, Iowa			
10 SLINGER	C10038	C10038	C10038	C10038
11 SHIELD	C8958	C8958	C8958	C8958
12 GASKET *	A2-3020	A2-3020	A2-3020	A2-3020

NOTES:
1. NON-STANDARD pump parts are not shown. When ordering repair parts, refer to page 1 of this catalog.
2. * = These parts are required when replacing shaft seal.

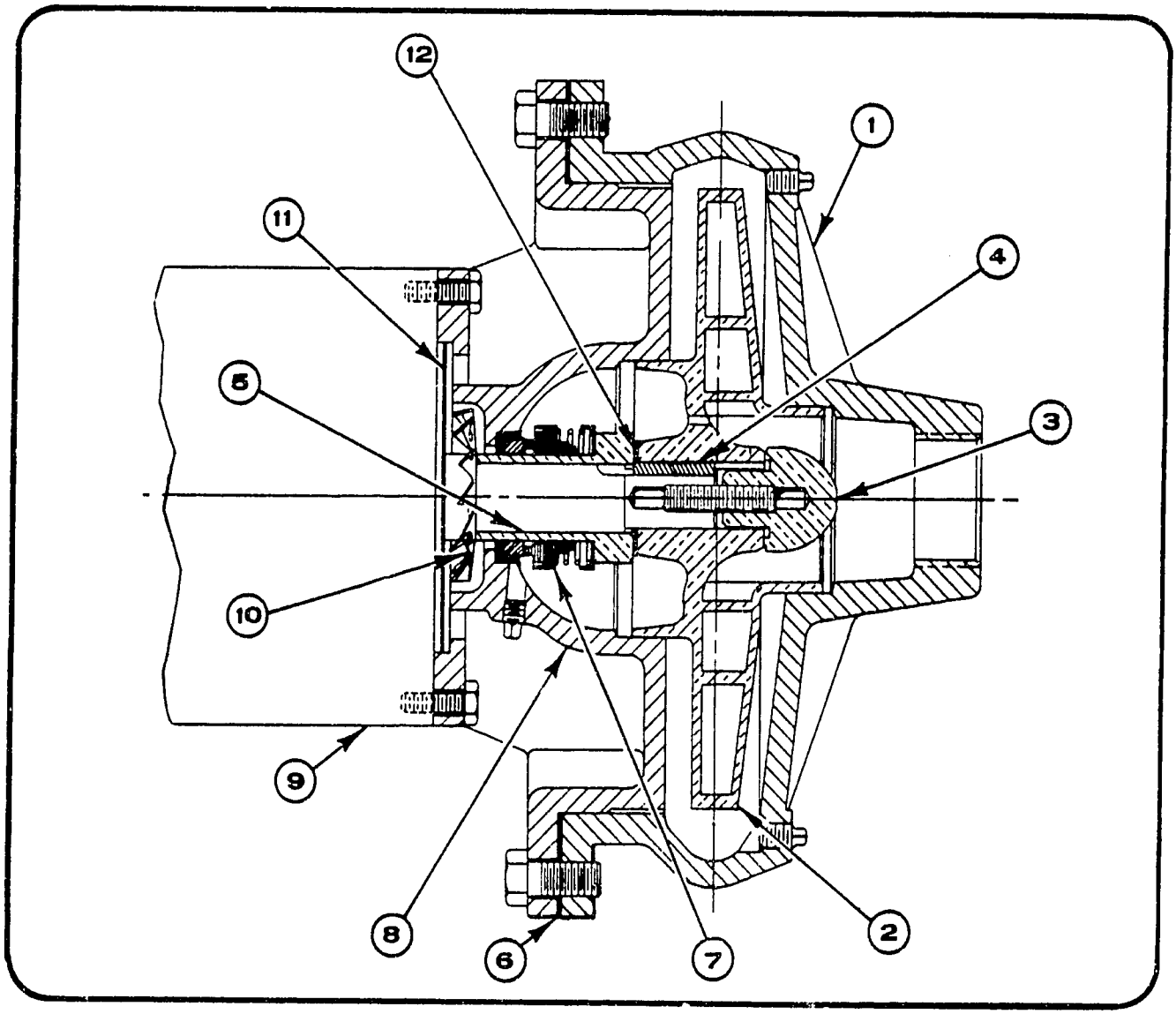

A9 PUMP AND PARTS LIST
SERIES A - 2 HP

PART NUMBER AND DESCRIPTION	2 HP 1" 1ϕ A9C1A	2 HP 1" 3ϕ A9C1A	2 HP 1¼" 1ϕ A9D1A	2 HP 1¼" 3ϕ A9D1A	2 HP 2" 1ϕ D9D1A	2 HP 2" 3ϕ A9D1A	2 HP 2½" 1ϕ A9D1A	2 HP 2½" 3ϕ A9D1A
1 CASE (CAST IRON) CASE (BRONZE)	F541 D2-76	F541 D2-76	F540 D2-74	F540 D2-74	F544 D2-80	F544 D2-80	F545 D2-79	F545 D2-79
2 IMPELLER (BRONZE)	C2-3211X 9"	C2-3211X 9"	C2-3213X $7^3/_{16}$"	C2-3213X $7^3/_{16}$"	C2-3214X $6^1/_2$"	C2-3214X $6^1/_2$"	C2-3215X $6^1/_8$"	C2-3215X $6^1/_8$"
3 STUD & NUT ASSEMBLY	C10035 A2-3898	C10035 A2-3898	C10035 A2-3898	C10035 A2-3898	C10035 A2-3898	C10035 A2-3898	C10035 A2-3898	C10035 A2-3898
4 KEY	C7763	C7763	C7763	C7763	C7763	C7763	C7763	C7763
5 SLEEVE *	A2-3905	A2-3905	A2-3905	A2-3905	A2-3905	A2-3905	A2-3905	A2-3905
6 GASKET *	D5450	D5450	D5450	D5450	D5450	D5450	D5450	D5450
7 SHAFT SEAL *	3179	3179	3179	3179	3179	3179	3179	3179
8 HEAD (CAST IRON) HEAD (BRONZE)	D2-1478 D2-1480	D2-1478 D2-1480	D2-1478 D2-1480	D2-1478 D2-1480	D2-1478 D2-1480	D2-1478 D2-1480	D2-1478 D2-1480	D2-1478 D2-1480
9 MOTOR	Contact Dunham-Bush, Inc., Marshalltown, Iowa							
10 SLINGER	C10038	C10038	C10038	C10038	C10038	C10038	C10038	C10038
11 SHIELD	C8958	C8958	C8958	C8958	C8958	C8958	C8958	C8958
12 GASKET *	A2-3020	A2-3020	A2-3020	A2-3020	A2-3020	A2-3020	A2-3020	A2-3020

NOTES: 1. NON-STANDARD pump parts are not shown. When ordering repair parts, refer to page 1 of this catalog.
2. * = These parts are required when replacing shaft seal.

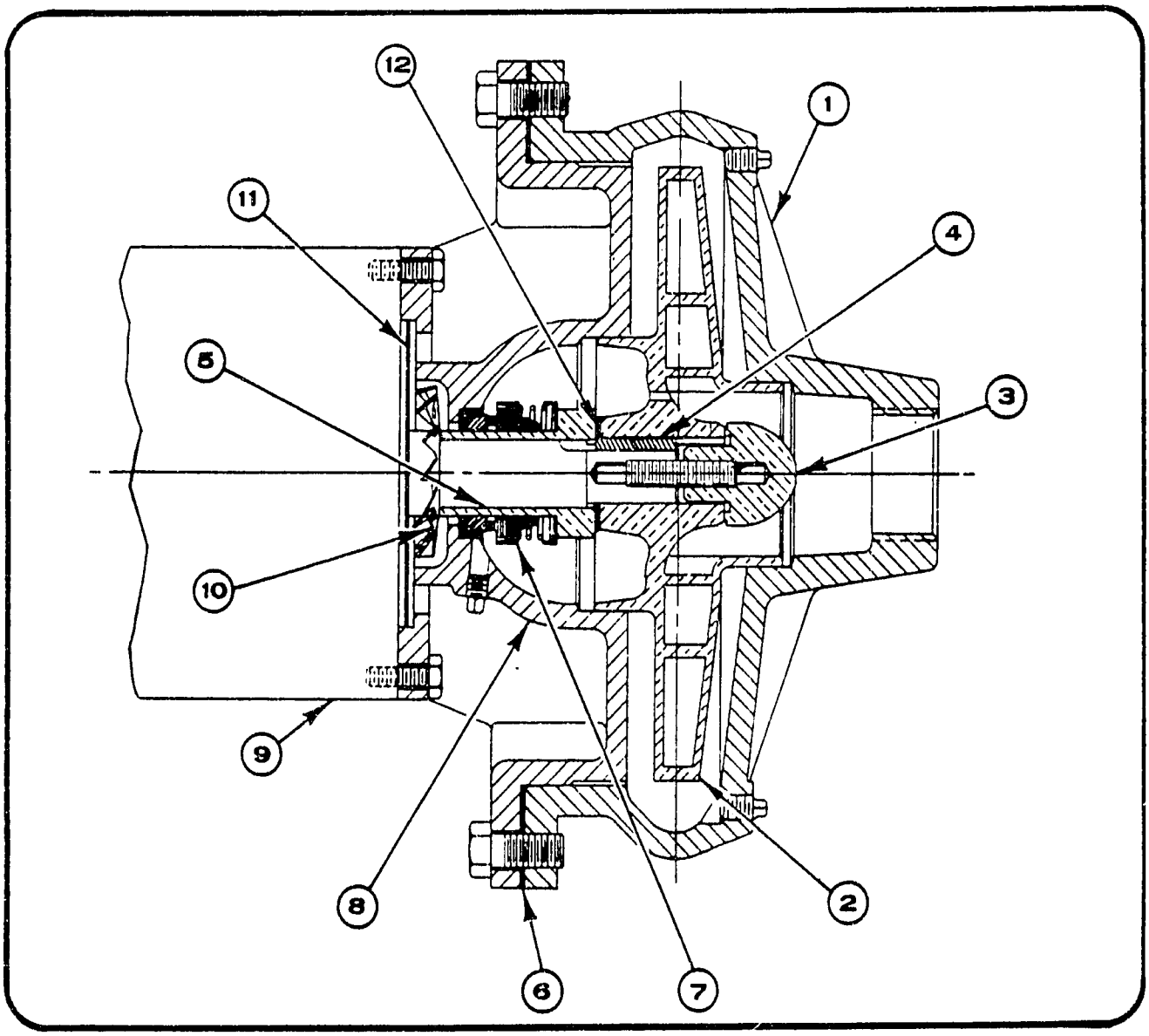

A9 PUMP AND PARTS LIST SERIES A - 3 HP

PART NUMBER AND DESCRIPTION	3 HP 1" 3ϕ A9D2A	3 HP 1" 3ϕ A9C2A	3 HP 1¼" 3ϕ A9D1A	3 HP 1¼" 3ϕ A9D2A	3 HP 2" 3ϕ A9D1A	3 HP 2½" 3ϕ A9D1A
1 CASE (CAST IRON) CASE (BRONZE)	F541 D2-76	F541 D2-76	F540 D2-74	F540 D2-74	F544 D2-80	F545 D2-79
2 IMPELLER (BRONZE)	C2-3212X 5¼"	C2-3211X 6 1/16"	C2-3213X 8¼"	C2-3213X 4 7/16"	C2-3214X 7 1/16"	C2-3215X 6¾"
3 STUD & NUT ASSEMBLY	C10035 A2-3898	C10035 A2-3898	C10035 A2-3898	C10035 A2-3898	C10035 A2-3898	C10035 A2-3898
4 KEY	C7763	C7763	C7763	C7763	C7763	C7763
5 SLEEVE *	A2-3905	A2-3905	A2-3905	A2-3905	A2-3905	A2-3905
6 GASKET *	D5450	D5450	D5450	D5450	D5450	D5450
7 SHAFT SEAL *	3179	3179	3179	3179	3179	3179
8 HEAD (CAST IRON) HEAD (BRONZE)	D2-1478 D2-1480	D2-1478 D2-1480	D2-1478 D2-1480	D2-1478 D2-1480	D2-1478 D2-1480	D2-1478 D2-1480
9 MOTOR	Contact Dunham-Bush, Inc., Marshalltown, Iowa					
10 SLINGER	C10038	C10038	C10038	C10038	C10038	C10038
11 SHIELD	C8958	C8958	C8958	C8958	C8958	C8958
12 GASKET *	A2-3020	A2-3020	A2-3020	A2-3020	A2-3020	A2-3020

NOTES: 1. NON-STANDARD pump parts are not shown. When ordering repair parts, refer to page 1 of this catalog.
2. * = These parts are required when replacing shaft seal.

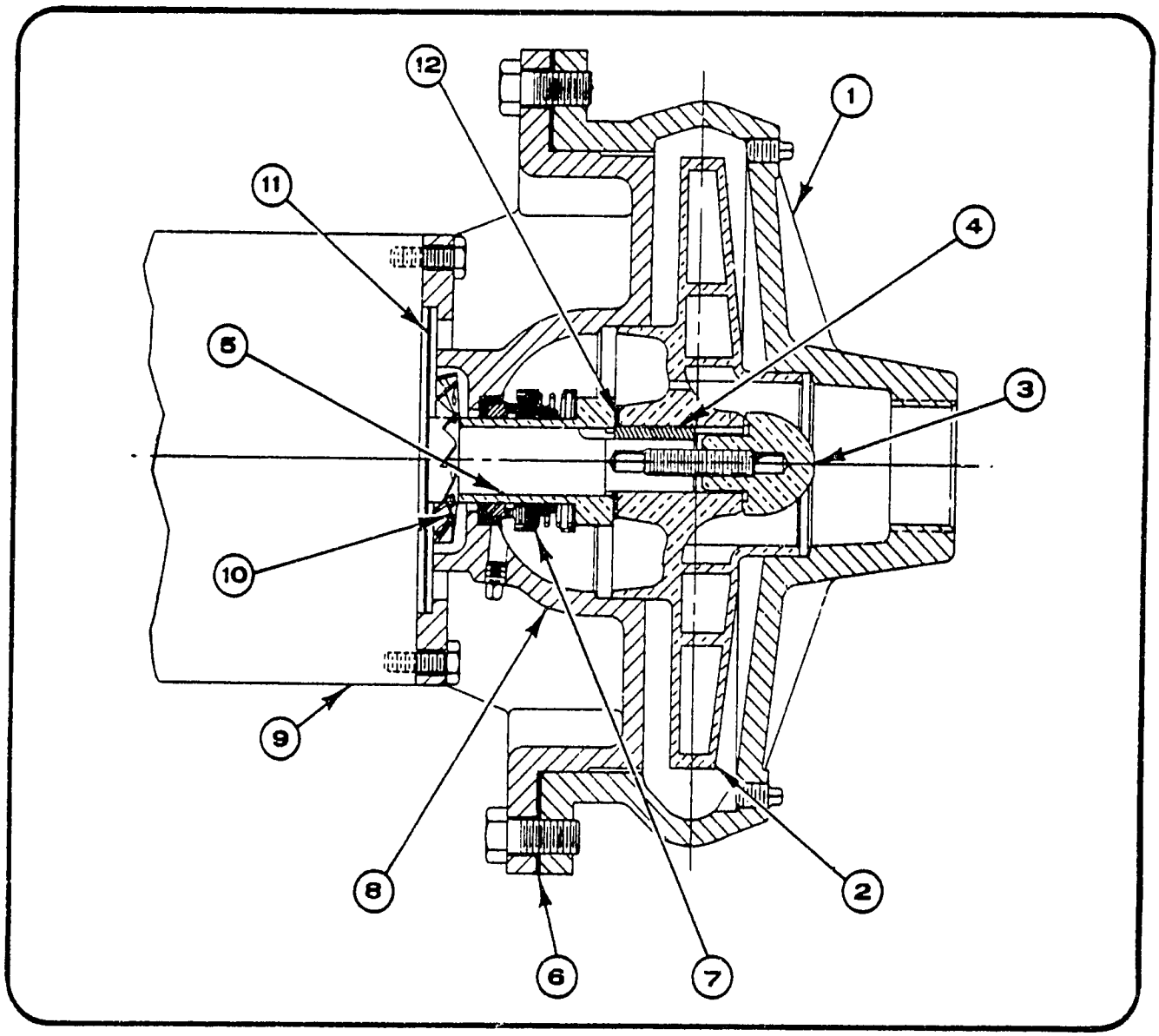

A9 PUMP AND PARTS LIST SERIES A – 5 HP

PART NUMBER AND DESCRIPTION	5 HP 1" 3ϕ A9C2A	5 HP 1" 3ϕ A9D2A	5 HP 1¼" 3ϕ A9D2A	5 HP 2" 3ϕ A9D1A	5 HP 2" 3ϕ A9D2A	5 HP 2½" 3ϕ A9D1A	5 HP 2½" 3ϕ A9D2A
1 CASE (CAST IRON) CASE (BRONZE)	F541 D2-76	F541 D2-76	F540 D2-74	F544 D2-80	F544 D2-80	F545 D2-79	F545 D2-79
2 IMPELLER (BRONZE)	C2-3211X $6^{9}/_{16}$"	C2-3212X $5^{7}/_{8}$"	C2-3213X $5^{15}/_{32}$"	C2-3214X $8^{7}/_{16}$"	C2-3214X $4^{15}/_{16}$"	C2-3215X $7^{15}/_{16}$"	C2-3215X $4^{3}/_{4}$"
3 STUD & NUT ASSEMBLY	C10035 A2-3898	C10035 A2-3898	C10035 A2-3898	C10035 A2-3899	C10035 A2-3899	C10035 A2-3899	C10035 A2-3899
4 KEY	C7763	C7763	C7763	C7763	C7763	C7763	C7763
5 SLEEVE *	A2-3905	A2-3905	A2-3905	A2-3905	A2-3905	A2-3905	A2-3905
6 GASKET *	D5450	D5450	D5450	D5450	D5450	D5450	D5450
7 SHAFT SEAL*	3179	3179	3179	3179	3179	3179	3179
8 HEAD (CAST IRON) HEAD (BRONZE)	D2-1478 D2-1480	D2-1478 D2-1480	D2-1478 D2-1480	D2-1478 D2-1480	D2-1478 D2-1480	D2-1478 D2-1480	D2-1478 D2-1480
9 MOTOR	Contact Dunham-Bush, Inc., Marshalltown, Iowa						
10 SLINGER	C10038	C10038	C10038	C10038	C10038	C10038	C10038
11 SHIELD	C8958	C8958	C8958	C8958	C8958	C8958	C8958
12 GASKET *	A2-3020	A2-3020	A2-3020	A2-3020	A2-3020	A2-3020	A2-3020

NOTES: 1. NON-STANDARD pump parts are not shown. When ordering repair parts, refer to page 1 of this catalog.
2. * = These parts are required when replacing shaft seal.

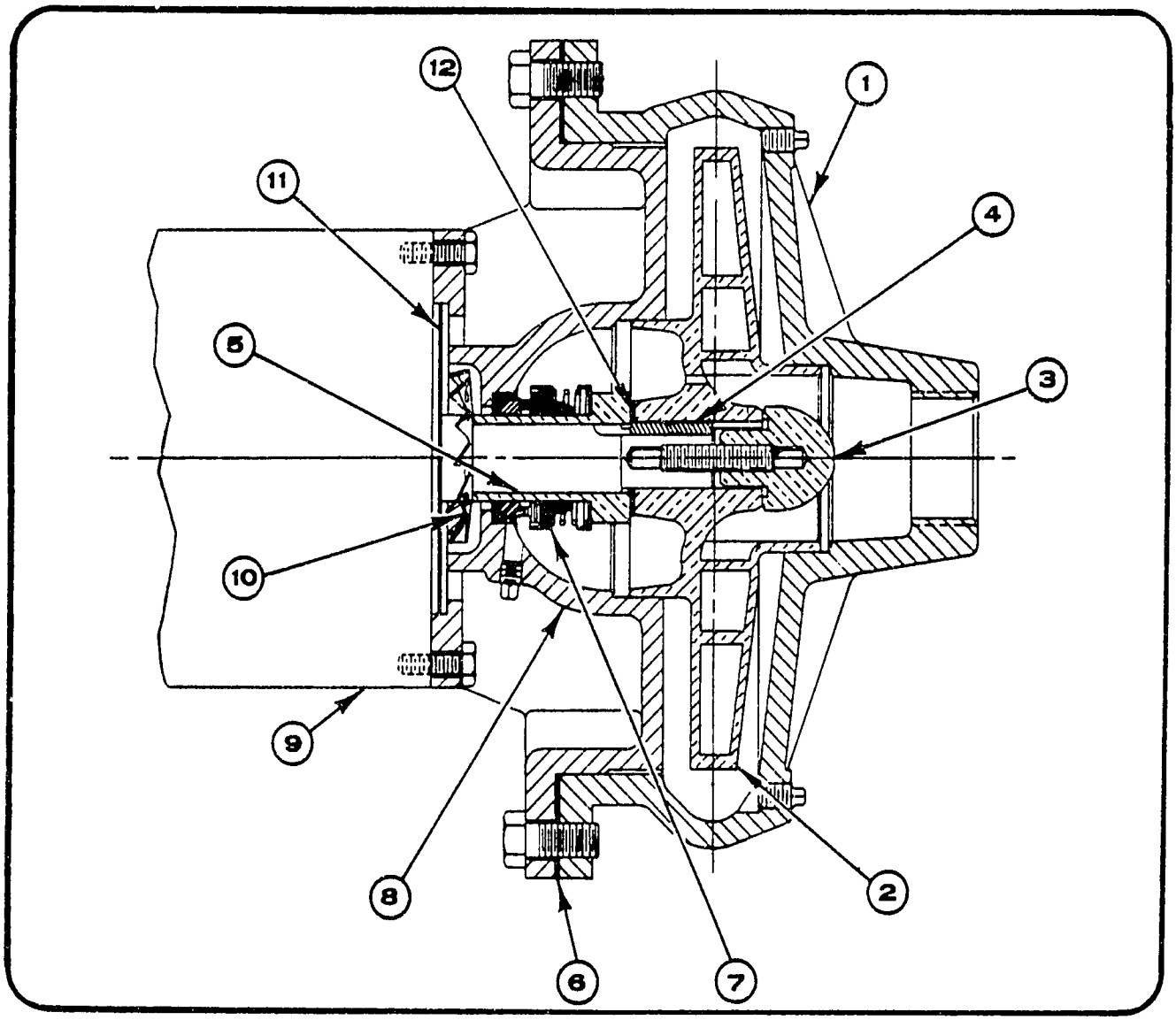

A9 PUMP AND PARTS LIST
SERIES A - 7½ HP

PART NUMBER AND DESCRIPTION		7½ HP 1¼" 3ϕ A9D2A	7½ HP 2" 3ϕ A9D2A	7½ HP 2½" 3ϕ A9D1A	7½ HP 2½" 3ϕ A9D1A
1	CASE (CAST IRON) CASE (BRONZE)	F540 D2-74	F544 D2-80	F545 D2-79	F545 D2-79
2	IMPELLER (BRONZE)	C2-3213X 5 15/16"	C2-3214X 5 9/16"	C2-3215X 9"	C2-3215X 5 5/16"
3	STUD & NUT ASSEMBLY	C10035 A2-3899	C10035 A2-3899	C10035 A2-3899	C10035 A2-3899
4	KEY	C7763	C7763	C7763	C7763
5	SLEEVE *	A2-3905	A2-3905	A2-3905	A2-3905
6	GASKET *	D5450	D5450	D5450	D5450
7	SHAFT SEAL *	3179	3179	3179	3179
8	HEAD (CAST IRON) HEAD (BRONZE)	D2-1478 D2-1480	D2-1478 D2-1480	D2-1481 D2-1483	D2-1478 D2-1480
9	MOTOR	Contact Dunham-Bush, Inc., Marshalltown, Iowa			
10	SLINGER	C1038	C1038	C1038	C1038
11	SHIELD	C8958	C8958	D5478	C8958
12	GASKET *	A2-3020	A2-3020	A2-3020	A2-3020

NOTES:
1. NON-STANDARD pump parts are not shown. When ordering repair parts, refer to page 1 of this catalog.
2. * = These parts are required when replacing shaft seal.

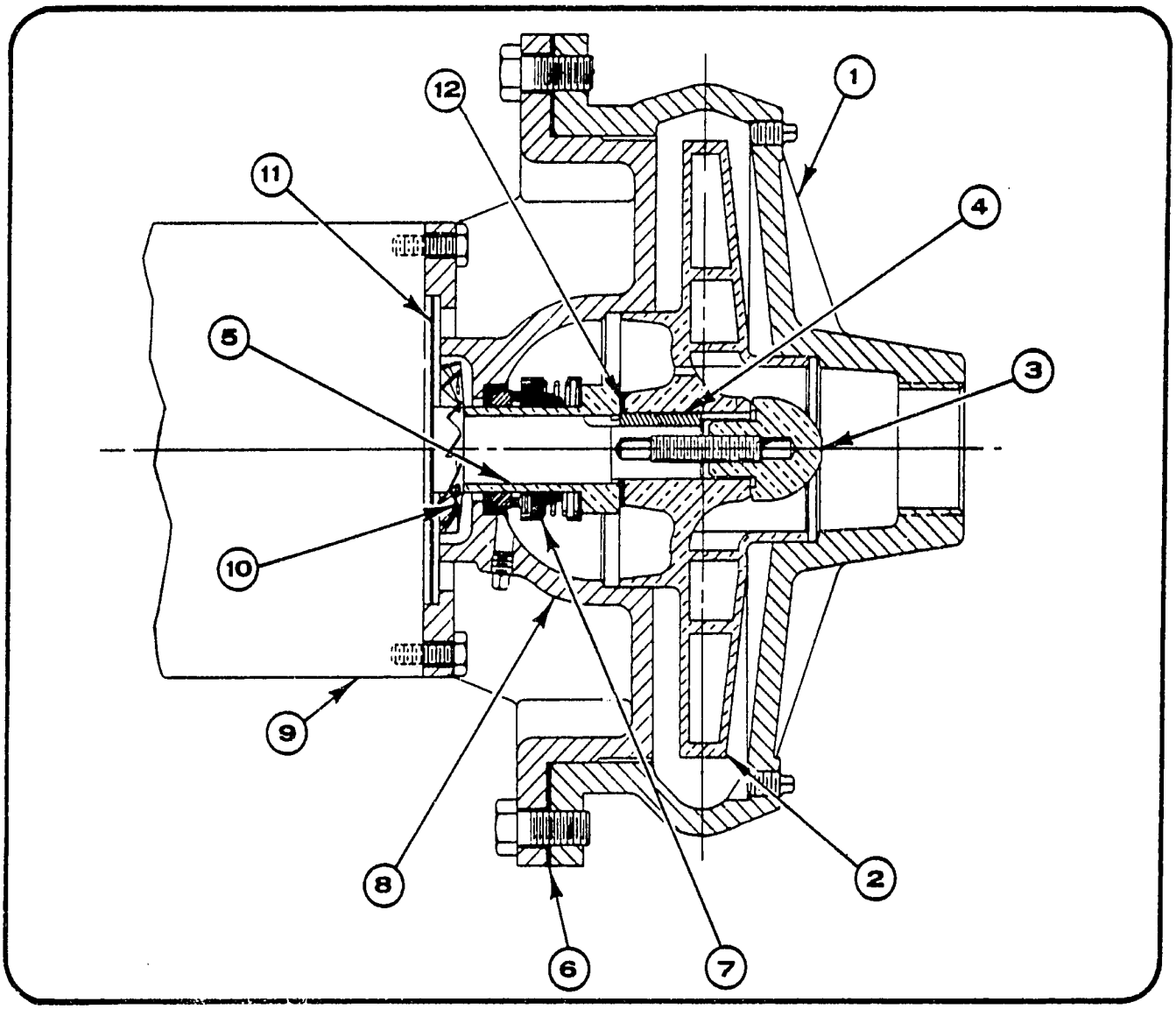

A9 PUMP AND PARTS LIST
SERIES A – 10 HP AND 15 HP

PART NUMBER AND DESCRIPTION		10 HP 1¼" 3ϕ A9D2A	10 HP 2" 3ϕ A9D2A	10 HP 2½" 3ϕ A9D2A	15 HP 2" 3ϕ A9D2A
1	CASE (CAST IRON) CASE (BRONZE)	F540 D2-74	F544 D2-80	F545 D2-79	F544 D2-80
2	IMPELLER (BRONZE)	C2-3213X $6^{3}/_{8}$"	C2-3214X $5^{29}/_{32}$"	C2-3215X $5^{21}/_{32}$"	C2-3214X $6^{5}/_{16}$"
3	STUD & NUT ASSEMBLY	C10035 A2-3899	C10035 A2-3899	C10035 A2-3899	C10035 A2-3899
4	KEY	C7763	C7763	C7763	C7763
5	SLEEVE *	A2-3905	A2-3905	A2-3905	A2-3905
6	GASKET *	D5450	D5450	D5450	D5450
7	SHAFT SEAL *	3179	3179	3179	3179
8	HEAD (CAST IRON) HEAD (BRONZE)	D2-1481 D2-1483	D2-1481 D2-1483	D2-1481 D2-1483	D2-1481 D2-1483
9	MOTOR	Contact Dunham-Bush, Inc., Marshalltown, Iowa			
10	SLINGER	C1038	C1038	C1038	C1038
11	SHIELD	D5478	D5478	D5478	D5478
12	GASKET *	A2-3020	A2-3020	A2-3020	A2-3020

NOTES: 1. NON-STANDARD pump parts are not shown. When ordering repair parts, refer to page 1 of this catalog.
2. * = These parts are required when replacing shaft seal.

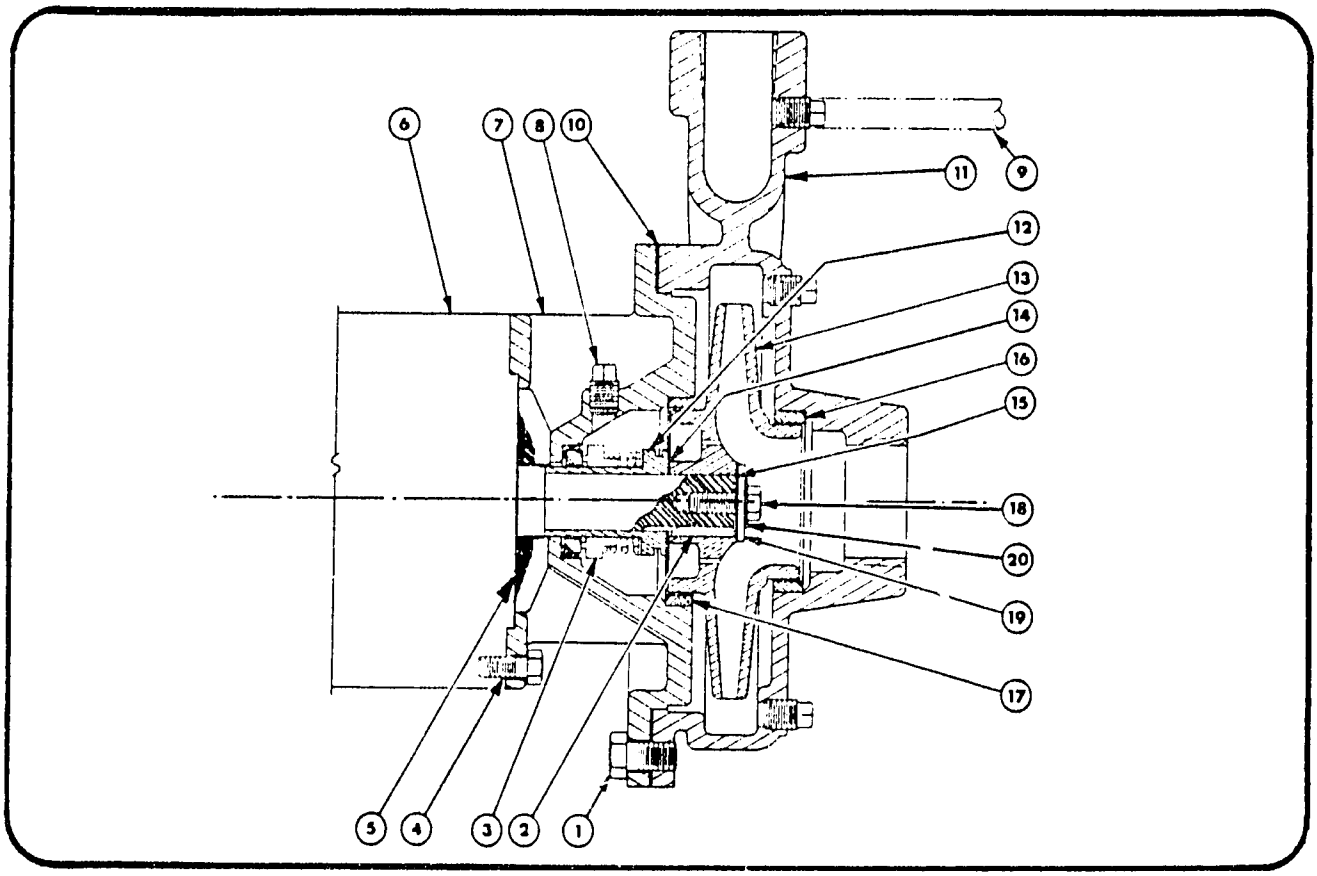

A7 PUMP AND PARTS LIST – ¾", 1¼" AND 1½" DIA. DISCHARGE

PART NUMBER & DESCRIPTION		¾" A7B	1¼" A7B	1¼" A7C	1½" A7B	1½" A7C
1.	Screw – Cap	P - 150				
2.	Key – Impeller	Supplied with Motor				
3.	Seal – Mechanical *	3179	3179	3179	3179	3179
	Seal – 250# Optional	Contact Dunham-Bush, Inc., Marshalltown, Iowa				
4.	Screw – Cap	P-142	P-142	P-150	P-142	P-150
5.	Slinger	Supplied with Motor				
6.	Motor	Contact Dunham-Bush, Inc., Marshalltown, Iowa				
7.	Head, C.I.	C2-2336	C2-2336	C2-2337	C2-2336	C2-2337
	Head, Bronze	C2-2660	C2-2660	C2-2661	C2-2660	C2-2661
	Head, C.I. w/wear Rings	C2-2345	C2-2345	C2-2346	C2-2345	C2-2346
8.	Fitting – Compression Straight	P - 194 (Optional)				
	Fitting – Elbow, Not shown	P - 195 (Optional)				
	Plug – Pipe	(5) P - 196				
9.	Tube	Copper 1/8" OD (Optional)				
10.	Gasket – Case *	C2-2343				
11.	Case, C.I.	C2-2390	C2-2335		C2-2377	
	Case, (Bronze)	C2-2665	C2-2666		C2-2667	
	Case, C.I. w/wear Rings	C2-2389	C2-2347		C2-2376	
	Case, 250# C.I.	Not Available				
	Case, 250# Bronze	Not Available				
	Case, 250# C.I. w/wear Rings	Not Available				
12.	Sleeve *	A2-3018	A2-3018	A2-3018	A2-3018	A2-3018
	Seal – 250# Optional	Contact Dunham-Bush, Inc., Marshalltown, Iowa				
13.	Impeller	C2-2378	C2-2340	C2-2340	C2-2380	C2-2380
14.	Gasket (Impeller – Sleeve) *	A2-3020	A2-3020	A2-3020	A2-3020	A2-3020
15.	Gasket (Impeller – Head) *	A2-3022-1				
16.	Ring – Case Wear Ring	A2-3026	A2-3015		A2-3027	
17.	Ring – Head Wear Ring	A2-3016				
18.	Screw – Impeller	3312	3312	3312	3312	3312
19.	Washer – Impeller	A2-3021-1				
20.	Washer – Sealing	3313	3313	3313	3313	3313

NOTES:
1. NON-STANDARD pump parts are not shown. When ordering repair parts, refer to page 1 of this catalog.
2. * = These parts are required when replacing shaft seal.

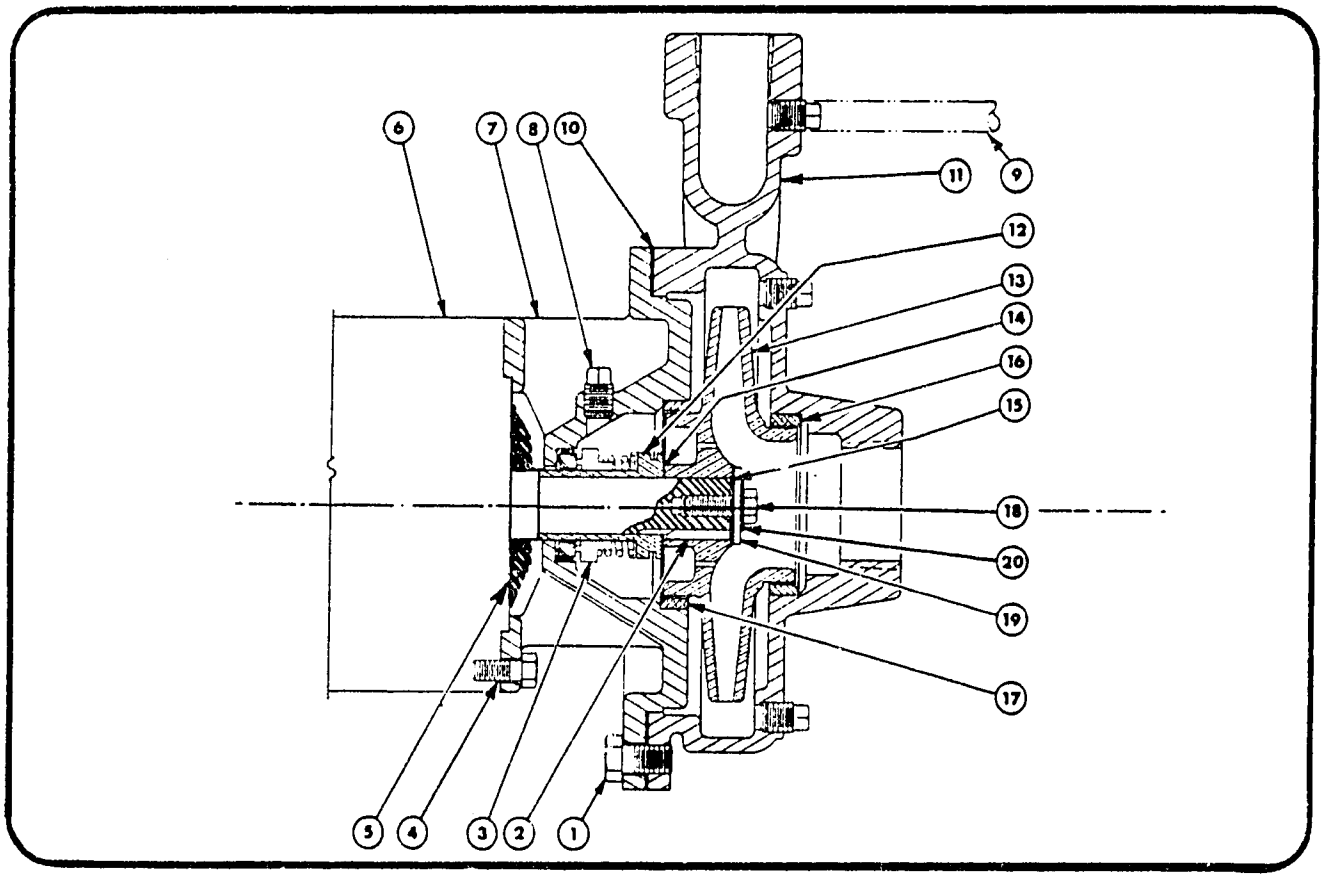

A7 PUMP AND PARTS LIST – 2" AND 2½" DIA. DISCHARGE

PART NUMBER & DESCRIPTION		2" A7D	2" A7E	2" A7F	2½" A7D	2½" A7E	2½" A7E H.C.	2½" A7F
1.	Screw – Cap	P - 150						
2.	Key – Impeller	Supplied with Motor						
3.	Seal – Mechanical *	3179	3179	3291	3179	3179	3179	3291
	Seal – 250# Optional	Contact Dunham-Bush, Inc., Marshalltown, Iowa						
4.	Screw – Cap	P - 142	P - 150	P - 150	P - 142	P - 150	P - 150	P - 150
5.	Slinger	Supplied with Motor						
6.	Motor	Contact Dunham-Bush, Inc., Marshalltown, Iowa						
7.	Head, C.I.	C2-2384	C2-2386	C2-2388	C2-2384	C2-2386	C2-2386	C2-2388
	Head, Bronze	C2-2662	C2-2663	C2-2664	C2-2662	C2-2663	C2-2663	C2-2664
	Head, C.I. w/wear rings	C2-2383	C2-2385	C2-2387	C2-2383	C2-2385	C2-2385	C2-2387
8.	Fitting – Compression Straight	P - 194 (Optional)						
	Fitting – Elbow, Not shown	P - 195 (Optional)						
	Plug – Pipe	(5) P - 196						
9.	Tube	Copper 1/8" OD (Optional)						
10.	Gasket – Case *	C2-2343						
11.	Case, C.I.	D2-1274			D2-1276			
	Case, (Bronze)	D2-1352			D2-1355			
	Case, C.I. w/wear rings	D2-1273			D2-1275			
	Case, 250# C.I.	Not Available						
	Case, 250# Bronze	Not Available						
	Case, 250# C.I. w/wear rings	Not Available						
12.	Sleeve *	A2-3018	A2-3018	A2-3025	A2-3018	A2-3018	A2-3018	A2-3025
	Seal – 250# Optional	Contact Dunham-Bush, Inc., Marshalltown, Iowa						
13.	Impeller	C2-2381	C2-2381	C2-2382	C2-2381	C2-2381	C2-2392	C2-2382
14.	Gasket (Impeller – Sleeve) *	A2-3020	A2-3020	A2-3029	A2-3020	A2-3020	A2-3020	A2-3029
15.	Gasket (Impeller – Head) *	A2-3021-1		A2-3022-2	A2-3022-1			A2-3022-2
16.	Ring – Case Wear Ring	A2-3028						
17.	Ring – Head Wear Ring	A2-3016						
18.	Screw – Impeller	3312	3312	3292	3312	3312	3312	3292
19.	Washer – Impeller	A2-3021-1		A2-3021-2	A2-3021-1			A2-3021-2
20.	Washer – Sealing	3313	3313	3293	3313	3313	3313	3293

NOTES: 1. NON-STANDARD pump parts are not shown. When ordering repair parts, refer to page 1 of this catalog.
2. * = These parts are required when replacing shaft seal.

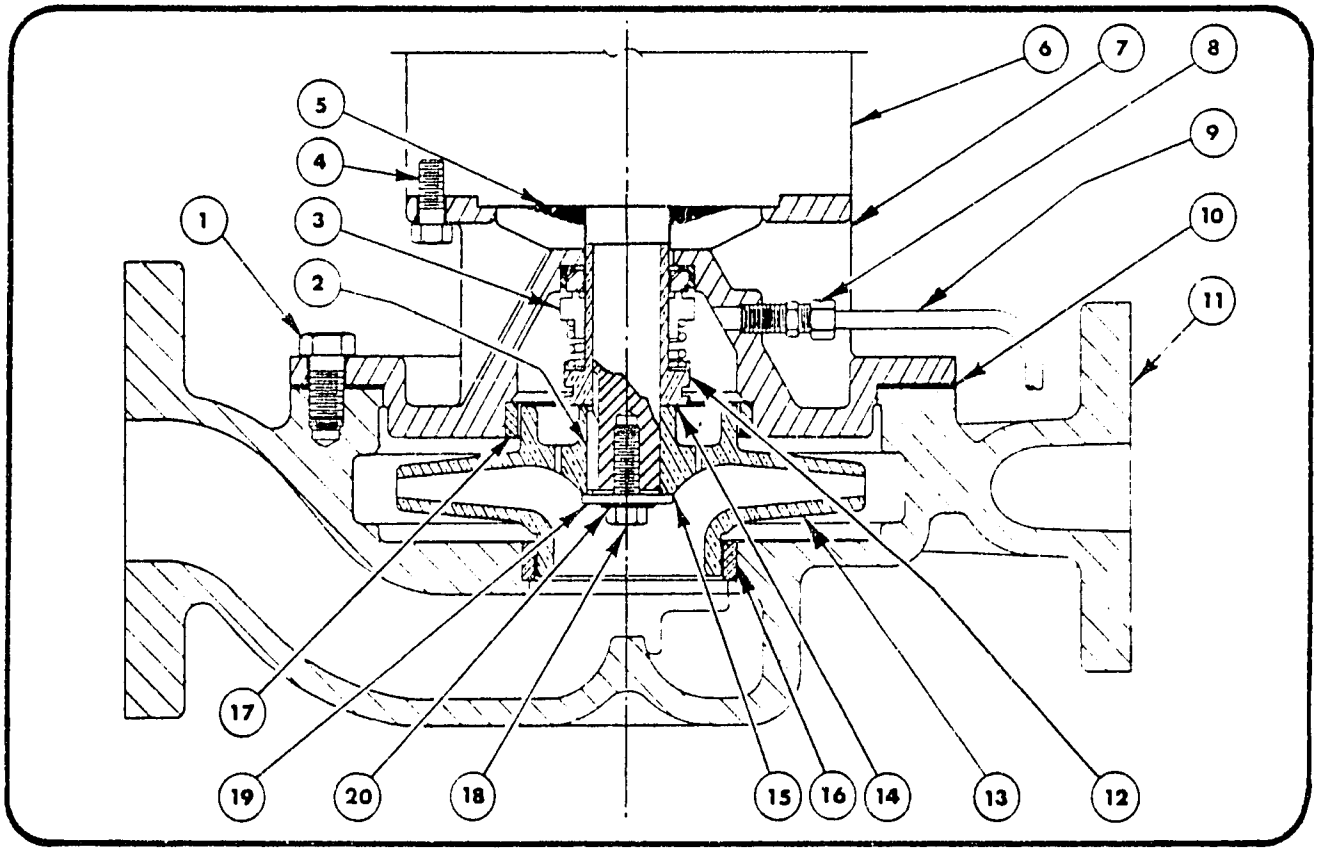

PM7 PUMP AND PARTS LIST – 1", 1¼" AND 1½" DIA. DISCHARGE

PART NUMBER & DESCRIPTION		1" PM7B	1¼" PM7B	1¼" PM7C	1½" PM7B	1½" PM7C
1.	Screw - Cap	P - 150				
2.	Key - Impeller	Supplied with Motor				
3.	Seal - Mechanical *	3179	3179	3179	3179	3179
	Seal 250# Optional	Contact Dunham-Bush, Inc. – Marshalltown, Iowa				
4.	Screw - Cap	P - 142	P - 142	P - 150	P - 142	P - 150
5.	Slinger	Supplied with Motor				
6.	Motor	Contact Dunham-Bush, Inc. – Marshalltown, Iowa				
7.	Head, C.I.	C2-2336	C2-2336	C2-2337	C2-2336	C2-2337
	Head, (Bronze)	C2-2660	C2-2660	C2-2661	C2-2660	C2-2661
	Head, C.I. w/wear rings	C2-2345	C2-2345	C2-2346	C2-2345	C2-2346
8.	Fitting - Compression Straight	P-194				
	Fitting - Elbow – Not shown	P-195				
	Plug - Pipe	(1) P-196				
9.	Tube	Copper 1/8" OD				
10.	Gasket - Case *	C2-2343				
11.	Case, C.I.	D2-1268	D2-1256	D2-1256	D2-1266	D2-1266
	Case, (Bronze)	D2-1346	D2-1348	D2-1348	D2-1350	D2-1350
	Case, C.I. w/wear rings	D2-1267	D2-1255	D2-1255	D2-1265	D2-1265
	Case, 250# C.I.	D2-1299	D2-1301	D2-1301	D2-1303	D2-1303
	Case, 250# Bronze	D2-1347	D2-1349	D2-1349	D2-1351	D2-1351
	Case, 250# C.I. w/wear rings	D2-1300	D2-1302	D2-1302	D2-1304	D2-1304
12.	Sleeve *	A2-3018	A2-3018	A2-3018	A2-3018	A2-3018
	Seal 250# Optional	Contact Dunham-Bush, Inc. – Marshalltown, Iowa				
13.	Impeller	C2-2379	C2-2340	C2-2340	C2-2380	C2-2380
14.	Gasket (Impeller - Sleeve) *	A2-3020	A2-3020	A2-3020	A2-3020	A2-3020
15.	Gasket (Impeller - Head) *	A2-3022-1				
16.	Ring - Case Wear Ring	A2-3026	A2-3015	A2-3015	A2-3027	A2-3027
17.	Ring - Head Wear Ring	A2-3016				
18.	Screw - Impeller	3312				
19.	Washer - Impeller	A2-3021-1				
20.	Washer - Sealing	3313				

NOTES: 1. NON-STANDARD pump parts are not shown. When ordering repair parts, refer to page 1 of this catalog.
2. * = These parts are required when replacing shaft seal.

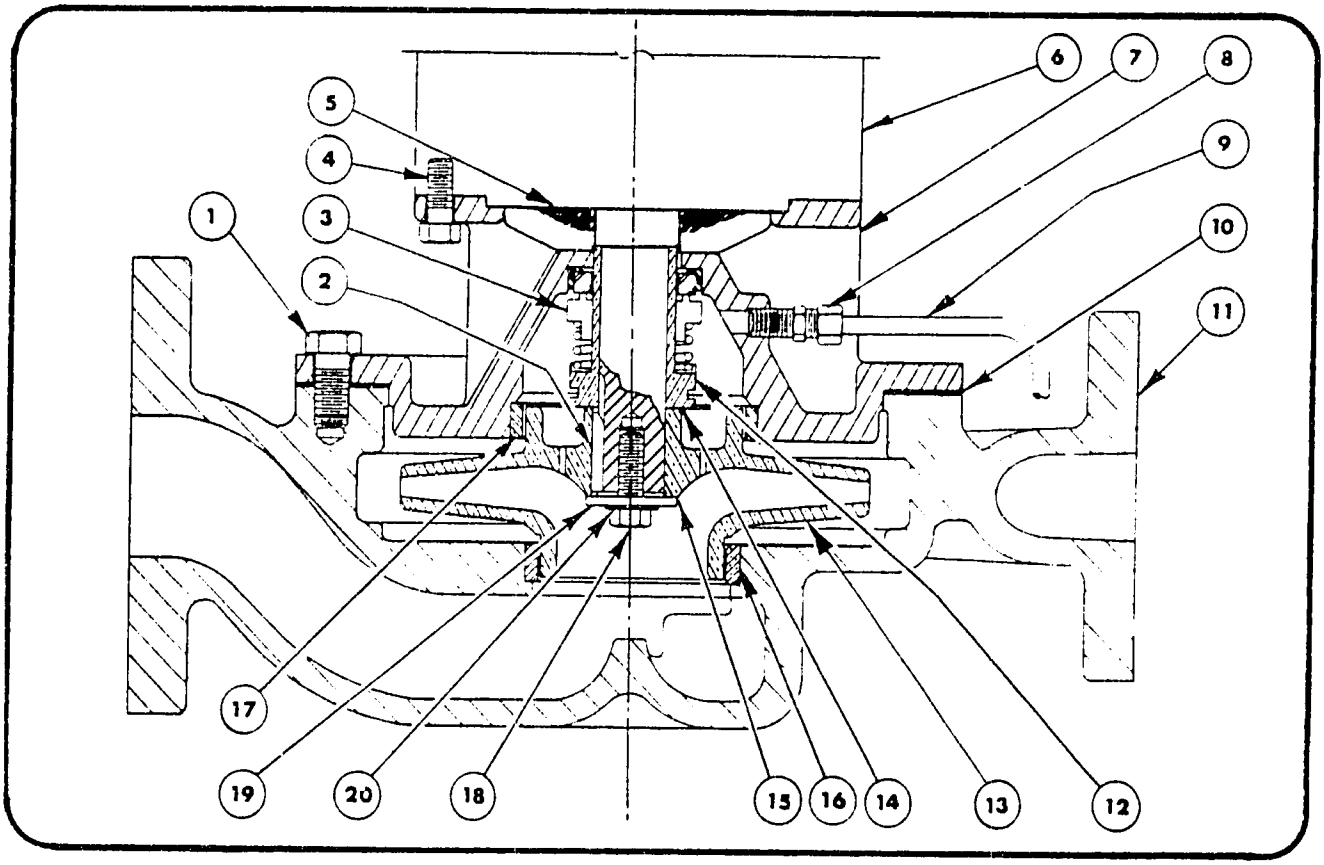

PM7 PUMP AND PARTS LIST – 2" AND 2½" DIA. DISCHARGE

PART NUMBER & DESCRIPTION		2" PM7D	2" PM7E	2" PM7F	2½" PM7D	2½" PM7E	2½" PM7E H.C.	2½" PM7F
1.	Screw - Cap	P - 150						
2.	Key - Impeller	Supplied with Motor						
3.	Seal - Mechanical *	3179	3179	3291	3179	3179	3179	3291
	Seal 250# Optional	Contact Dunham-Bush, Inc. – Marshalltown, Iowa						
4.	Screw - Cap	P - 142	P - 150	P - 150	P - 142	P -150	P - 150	P -150
5.	Slinger	Supplied with Motor						
6.	Motor	Contact Dunham-Bush, Inc. – Marshalltown, Iowa						
7.	Head, C.I.	C2-2384	C2-2386	C2-2388	C2-2384	C2-2386	C2-2386	C2-2388
	Head, (Bronze)	C2-2662	C2-2663	C2-2664	C2-2662	C2-2663	C2-2663	C2-2664
	Head, C.I. w/wear rings	C2-2383	C2-2385	C2-2387	C2-2383	C2-2385	C2-2385	C2-2387
8.	Fitting - Compression Straight	P-194						
	Fitting - Elbow – Not Shown	P-195						
	Plug - Pipe	(1) P-196						
9.	Tube	Copper 1/8" OD						
10.	Gasket - Case *	C2-2343						
11.	Case, C.I.	D2-1270			D2-1272			
	Case, (Bronze)	D2-1269			D2-1356			
	Case, C.I. w/wear rings	D2-1353			D2-1271			
	Case, 250# C.I.	D2-1305			D2-1307			
	Case, 250# Bronze	D2-1354			D2-1357			
	Case, 250# C.I. w/wear rings	D2-1306			D2-1308			
12.	Sleeve *	A2-3018	A2-3018	A2-3025	A2-3018	A2-3018	A2-3018	A2-3025
	Seal 250# Optional	Contact Dunham-Bush, Inc. – Marshalltown, Iowa						
13.	Impeller	C2-2381	C2-2381	C2-2382	C2-2381	C2-2381	C2-2392	C2-23d2
14.	Gasket (Impeller - Sleeve) *	A2-3020	A2-3020	A2-3029	A2-3020	A2-3020	A2-3020	A2-3029
15.	Gasket (Impeller - Head)	A2-3022-1		A2-3022-2	A2-3022-1			A2-3022-2
16.	Ring - Case Wear Ring	A2-3028						
17.	Ring - Head Wear Ring	A2-3016						
18.	Screw - Impeller	3312		3292	3312			3292
19.	Washer - Impeller	A2-3021-1		A2-3021-2	A2-3021-1			A2-3021-2
20.	Washer - Sealing	3313		3293	3313			3293

NOTES: 1. NON-STANDARD pump parts are not shown. When ordering repair parts, refer to page 1 of this catalog.
2. * = These parts are required when replacing shaft seal.

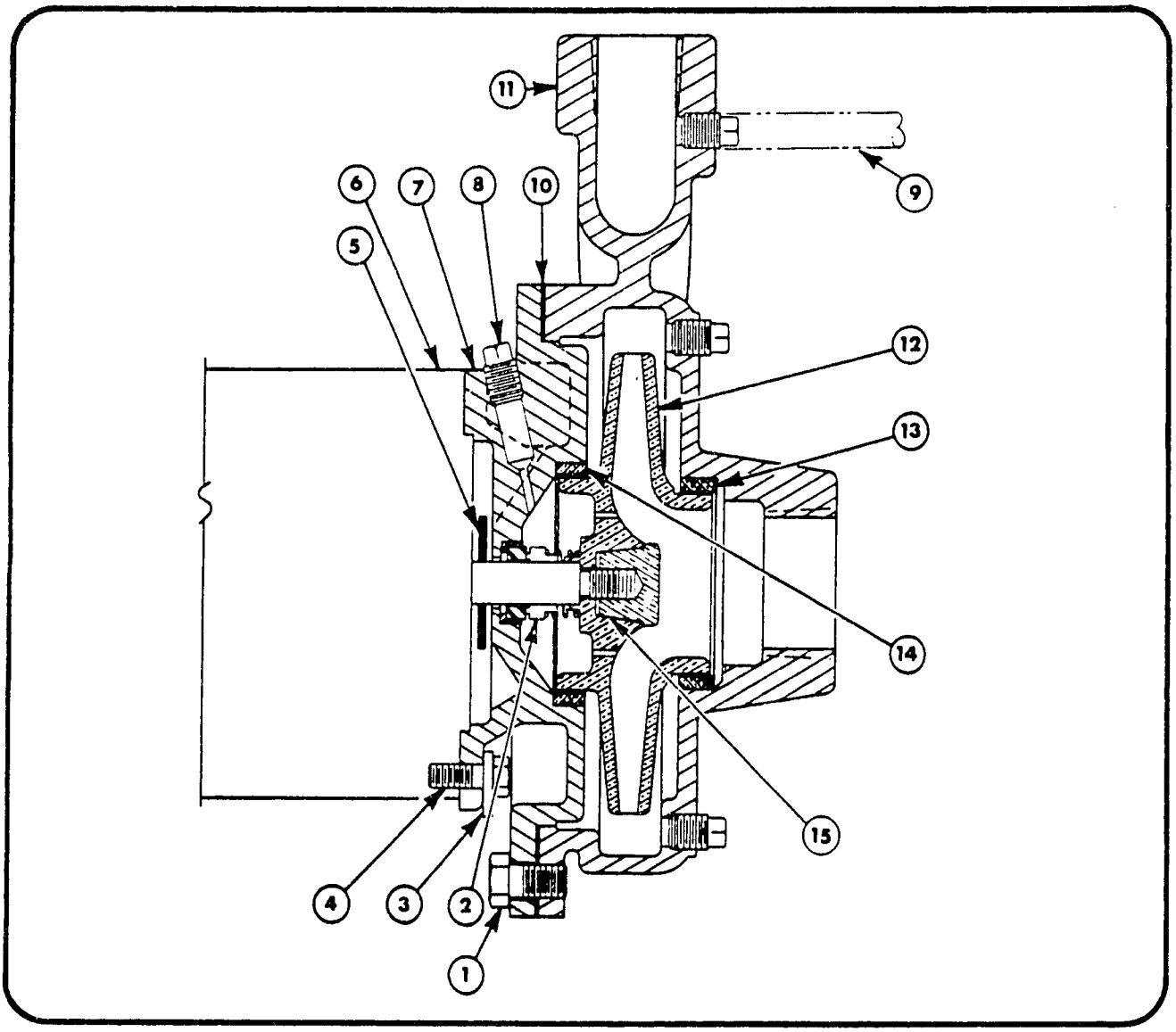

A7A PUMP AND PARTS LIST – ¾", 1¼" AND 1½" DIA. DISCHARGE

	PART NUMBER & DESCRIPTION	¾" A7A	1¼" A7A	1½" A7A
1.	Screw–Cap	P - 150	P - 150	P - 150
2.	Seal–Mechanical *	472	472	472
3.	Retainer–Head	A2-3023	A2-3023	A2-3023
4.	Screw–Cap	P - 142	P - 142	P - 142
5.	Slinger	C8854	C8854	C8854
6.	Motor	Contact Dunham-Bush, Inc. Marshalltown, Iowa		
7.	Head, C.I.	C2-2342	C2-2342	C2-2342
	Head, Bronze	C2-2659	C2-2659	C2-2659
	Head, C.I. w/wear rings	C2-2344	C2-2344	C2-2344
8.	Fitting – Compression Straight	P - 194 (Optional)		
	Fitting – Elbow (Not Shown)	P - 195 (Optional)		
	Plug–Pipe	(5) P - 196		
9.	Tube	Copper 1/8" OD (Optional)		
10.	Gasket–Case *	C2-2343	C2-2343	C2-2343
11.	Case, C.I.	C2-2390	C2-2335	C2-2377
	Case, Bronze	C2-2665	C2-2666	C2-2667
	Case, C.I. w/wear rings	C2-2389	C2-2347	C2-2376
12.	Impeller	C2-2378	C2-2339	C2-2498
13.	Ring – Case Wear Ring	A2-3026	A2-3015	A2-3027
14.	Ring – Head Wear Ring	A2-3016	A2-3016	A2-3016
15.	Screw–Impeller	A2-3691	A2-3691	A2-3691

NOTES: 1. NON-STANDARD pump parts are not shown. When ordering repair parts, refer to page 1 of this catalog.
2. * = These parts are required when replacing shaft seal.

676

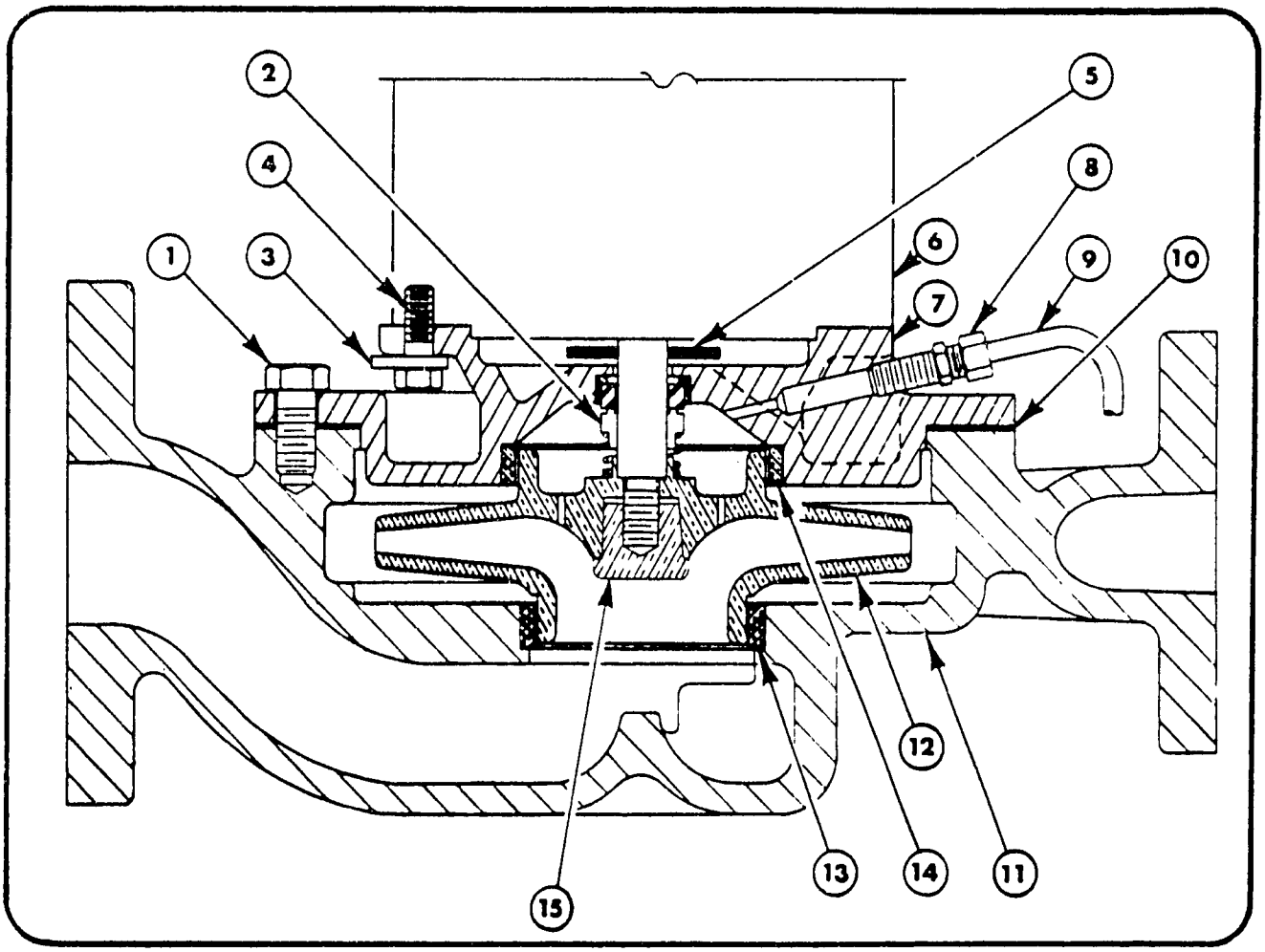

PM7A PUMP AND PARTS LIST
1", 1¼" AND 1½" DIA. DISCHARGE

PART NUMBER & DESCRIPTION		1" PM7A	1¼" PM7A	1½" PM7A
1.	Screw–Cap	P - 150	P - 150	P - 150
2.	Seal–Mechanical *	472	472	472
3.	Retainer–Head	A2-3023	A2-3023	A2-3023
4.	Screw–Cap	P - 142	P - 142	P - 142
5.	Slinger	C8854	C8854	C8854
6.	Motor	Contact Dunham-Bush, Inc., Marshalltown, Iowa		
7.	Head, C.I.	C2-2342	C2-2342	C2-2342
	Head, Bronze	C2-2659	C2-2659	C2-2659
	Head, C.I. w/wear rings	C2-2344	C2-2344	C2-2344
8.	Fitting–Compression Straight	P - 194		
	Fitting–Elbow (Not Shown)	P - 195		
	Plug–Pipe	(1) P - 196		
9.	Tube	Copper 1/8" OD		
10.	Gasket–Case *	C2-2343	C2-2343	C2-2343
11.	Case, C.I.	D2-1268	D2-1256	D2-1266
	Case, Bronze	D2-1346	D2-1348	D2-1350
	Case, C.I. w/wear rings	D2-1267	D2-1255	D2-1265
	Case, 250# C.I.	D2-1299	D2-1301	D2-1303
	Case, 250# Bronze	D2-1347	D2-1349	D2-1351
	Case, 250# C.I. w/wear rings	D2-1300	D2-1302	D2-1304
12.	Impeller	C2-2378	C2-2339	C2-2498
13.	Ring–Case Wear Ring	A2-3026	A2-3015	A2-3027
14.	Ring–Head Wear Ring	A2-3016	A2-3016	A2-3016
15.	Nut–Impeller	A2-3691	A2-3691	A2-3691

NOTES: 1. NON-STANDARD pump parts are not shown. When ordering repair parts, refer to page 1 of this catalog.
2. * = These parts are required when replacing shaft seal.

677

DUNHAM-BUSH

AIR CONDITIONING, REFRIGERATION, HEATING PRODUCTS AND ACCESSORIES

MAIN OFFICES AND FACTORIES

MAIN OFFICES
175 South Street
West Hartford, Connecticut
06110

WEST HARTFORD DIVISION
179 South Street
West Hartford, Connecticut
06110

HARRISONBURG DIVISION
101 Burgess Road
Harrisonburg, Virginia
22801

MARSHALLTOWN DIVISION
811 East Main Street
Marshalltown, Iowa
50158

SUBSIDIARIES

DUNHAM-BUSH of Canada Limited
140 Wendell Avenue
Weston, Ontario

DUNHAM-BUSH, LTD.
Fitzherbert Road, Farlington
Portsmouth, Hampshire, England

DUNHAM-BUSH INTERNATIONAL: 175 South Street, West Hartford, Connecticut 06110, U.S.A.
CABLE: DUNBUSH or TELEX: 994469

SALES OFFICES

ALABAMA
Birmingham
Mobile

ARIZONA
Phoenix

ARKANSAS
Little Rock

CALIFORNIA
Arcadia
Los Angeles
San Diego
San Francisco

COLORADO
Denver

CONNECTICUT
Hartford
New Haven

FLORIDA
Jacksonville
Miami
Orlando
Tampa

GEORGIA
Atlanta

HAWAII
Honolulu

ILLINOIS
Chicago
Peoria
Rockford

INDIANA
Indianapolis
Michigan City

IOWA
DesMoines

KANSAS
Lenexa

KENTUCKY
Louisville

LOUISIANA
New Orleans
Shreveport

MAINE
Lewiston

MARYLAND
Baltimore
Silver Spring

MASSACHUSETTS
Boston
Springfield

MICHIGAN
Detroit
Grand Rapids
Kalamazoo

MINNESOTA
Minneapolis

MISSISSIPPI
Jackson

MISSOURI
Kansas City
St. Louis

MONTANA
Billings
Great Falls

NEBRASKA
Omaha

NEW JERSEY
Little Falls
South Amboy
Union

NEW MEXICO
Albuquerque

NEW YORK
Albany
Buffalo
New York City
Rochester
Syracuse

NORTH CAROLINA
Charlotte
Greensboro

OHIO
Akron
Cincinnati
Cleveland
Columbus
Dayton
Delaware
Toledo

OKLAHOMA
Oklahoma City
Tulsa

OREGON
Portland

PENNSYLVANIA
Harrisburg
Philadelphia

PENNSYLVANIA (Cond't)
Pittsburgh
Pittston

RHODE ISLAND
Providence

SOUTH CAROLINA
Columbia
Greenville

TENNESSEE
Chattanooga
Memphis
Knoxville
Nashville

TEXAS
Austin
Corpus Christie
Dallas
Fort Worth
El Paso
Houston
Lubbock
San Antonio

UTAH
Salt Lake City

VIRGINIA
Alexandria
Richmond

WASHINGTON
Seattle
Spokane

WEST VIRGINIA
Barboursville

WISCONSIN
Milwaukee

DUNHAM-BUSH, INC. • West Hartford, Connecticut 06110, U.S.A.

2505B-7.5M-567A-1177B

one of The Signal Companies

Exhibit E-7

FORM NO. 17448P
EFFECTIVE
MARCH 1981
SUPERSEDES 17448N

DUNHAM-BUSH

A5, A7, PM7 and A9 CENTRIFUGAL PUMP REPAIR PARTS LIST PRICES

PRICES AND SPECIFICATIONS SUBJECT TO CHANGE WITHOUT NOTICE.
FOR TERMS OF SALE REFER TO LATEST REVISION OF FORM 1278

REFER TO FORM 2505 FOR DESCRIPTION OF PARTS AND NUMBERS

PART NUMBER	LIST PRICE
472	$ 25.05
860	63.10
861	73.40
1112	.70
3179	80.20
3199	103.00
3291	148.00
3292	2.30
3293	2.35
3312	2.30
3313	1.75
A2-51	73.40
A2-672	43.45
A2-3015	45.90
A2-3016	45.90
A2-3018	24.10
A2-3020	1.20
A2-3021-1	5.60
A2-3021-2	16.85
A2-3022-1	1.20
A2-3022-2	5.85
A2-3023	1.20
A2-3025	57.20
A2-3026	45.90
A2-3027	45.90
A2-3028	45.90
A2-3029	5.90
A2-3379	5.45
A2-3691	12.10
A2-3898	32.90
A2-3905	73.90
C2-73 x 6-1/16	276.00
C2-73 x 6-9/16	276.00
C2-73 x 6-3/4	276.00
C2-73 x 7-5/16	276.00
C2-73 x 8-7/16	276.00
C2-73 x 9	276.00
C2-2335	218.00
C2-2336	172.00
C2-2337	183.00
C2-2339	310.00
C2-2340	264.00
C2-2342	91.65
C2-2343	4.45

PART NUMBER	LIST PRICE
C2-2344	$264.00
C2-2345	310.00
C2-2346	344.00
C2-2347	344.00
C2-2376	495.00
C2-2377	286.00
C2-2378	240.00
C2-2379	255.00
C2-2380	276.00
C2-2381	293.00
C2-2382	293.00
C2-2383	428.00
C2-2384	179.00
C2-2385	436.00
C2-2386	160.00
C2-2387	436.00
C2-2388	160.00
C2-2389	323.00
C2-2390	268.00
C2-2392	339.00
C2-2498	311.00
C2-2659	499.00
C2-2660	504.00
C2-2661	538.00
C2-2662	550.00
C2-2663	550.00
C2-2664	563.00
C2-2665	142.00
C2-2666	756.00
C2-2667	779.00
C-7763	1.50
C8709	1.20
C8854	2.55
C8930	9.20
C8938	7.35
C8958	12.90
C10025	12.20
C10035	3.00
C10037	15.15
C10038	15.15
C10060	15.15
C10061	15.15

PART NUMBER	LIST PRICE
C10062	$ 10.80
C10063	10.80
C10063SS	40.70
D2-74	765.00
D2-76	797.00
D2-77	550.00
D2-78	611.00
D2-79	918.00
D2-80	918.00
D2-1255	424.00
D2-1256	300.00
D2-1265	469.00
D2-1266	368.00
D2-1267	469.00
D2-1268	310.00
D2-1269	469.00
D2-1270	355.00
D2-1271	687.00
D2-1272	344.00
D2-1273	687.00
D2-1274	332.00
D2-1275	883.00
D2-1276	412.00
D221299	310.00
D2-1300	469.00
D2-1301	300.00
D2-1302	469.00
D2-1303	368.00
D2-1304	469.00
D2-1305	412.00
D2-1306	687.00
D2-1307	412.00
D2-1308	1,833.00
D2-1346	861.00
D2-1347	1,148.00
D2-1348	1,148.00
D2-1349	1,148.00
D2-1350	1,261.00
D2-1351	1,261.00
D2-1352	1,147.00
D2-1353	1,147.00

6-19

PART NUMBER	LIST PRICE
D2-1354	$1,147.00
D2-1355	1,147.00
D2-1356	1,147.00
D2-1357	1,147.00
D5193 x 4-5/16	91.65
D5193 x 4-9/16	91.65
D5193 x 5	91.65
D5195 x 4-1/2	91.65
D5197 x 3-5/16	91.65
D5197 x 4-5/16	91.65
D5199 x 4-1/8	91.65
D5199 x 4-1/4	91.65
D5202 x 4-1/8	91.65
D5203 x 3 1/8	91.65
D5203 x 3-1/2	91.65
D5203 x 3-7/8	91.65
D5203 x 4-3/16	91.65
D5352	2.85
D5450	6.60
D5478	15.15
E6041	79.35
E6042	61.10
E6046 x 1-1/2	79.35
E6047 x 2	79.35

PART NUMBER	LIST PRICE
E6048	$ 79.35
E6077	134.00
E6078	159.00
E6079	153.00
E6080	185.00
E6081	122.00
E6141 x 5-1/4	257.00
E6141 x 5-7/8	257.00
E6181 x 4-7/16	257.00
E6181 x 4-15/16	257.00
E6181 x 5-15/16	257.00
E6181 x 5-15/32	257.00
E6181 x 6-3/8	257.00
E6181 x 7-3/16	276.00
E6181 x 8-1/4	276.00
E6184 x 3-15/16	257.00
E6184 x 4-1/4	257.00
E6188 x 4-15/16	257.00
E6188 x 5-3/8	257.00
E6188 x 5-9/16	257.00
E6188 x 5-29/32	257.00
E6188 x 6-1/2	257.00
E6188 x 6-5/16	257.00
E6188 x 7-1/16	276.00

PART NUMBER	LIST PRICE
E6188 x 8-7/16	$ 276.00
E6204 x 4-3/4	257.00
E6204 x 5-5/16	257.00
E6204 x 5-21/32	257.00
E6204 x 6-1/8	257.00
E6204 x 6-3/4	257.00
E6204 x 7-15/16	276.00
E6204 x 9	276.00
F539	91.65
F540	137.00
F541	122.00
F544	146.00
F545	153.00
F546	107.00
P2	1.15
P6	1.15
P116	2.30
P142	4.10
P150	1.20
P189	4.10
P190	4.55
P192	1.20
P193	1.75
P194	.75
P195	1.25
P196	1.10
1/8" OD Copper Tube	.60

C2-3211 x 6 1/16"	$ 276.00
C2-3211 x 6 9/16"	276.00
C2-3211 x 6 3/4	276.00
C2-3211 x 7 15/16"	276.00
C2-3211 x 8 7/16"	276.00
C2-3211 x 9"	276.00
C2-3212 x 5 1/4 "	257.00
C2-3212 x 5 7/8"	257.00
C2-3212 x 6 1/16"	257.00
C2-3213 x 4 7/16"	257.00
C2-3213 x 4 15/16	257.00
C2-3213 x 5 15/32"	257.00
C2-3213 x 5 9/16"	257.00
C2-3213 x 5 15/16"	257.00
C2-3213 x 6 3/8"	257.00

C2-3213 x 7 3/16"	$276.00
C2-3213 x 8 1/4 "	276.00
C2-3214 x 4 15/16"	257.00
C2-3214 x 5 3/8 "	257.00
C2-3214 x 5 29/32"	257.00
C2-3214 x 6 5/16"	257.00
C2-3214 x 6 1/2 "	257.00
C2-3214 x 7 1/16"	276.00
C2-3214 x 8 7/16 "	276.00
C2-3215 x 4 3/4 "	257.00

C2-3215 x 5 5/16"	$ 257.00
C2-3215 x 5 21/32"	257.00
C2-3215 x 6 1/8"	257.00
C2-3215 x 7 15/16"	276.00
C2-3215 x 9"	276.00
D2-1478	171.00
D2-1479	458.00
D2-1480	526.00
D2-1481	236.00
D2-1482	596.00
D2-1483	1,078.00

Exhibit E-8

FORM NO. 3440B

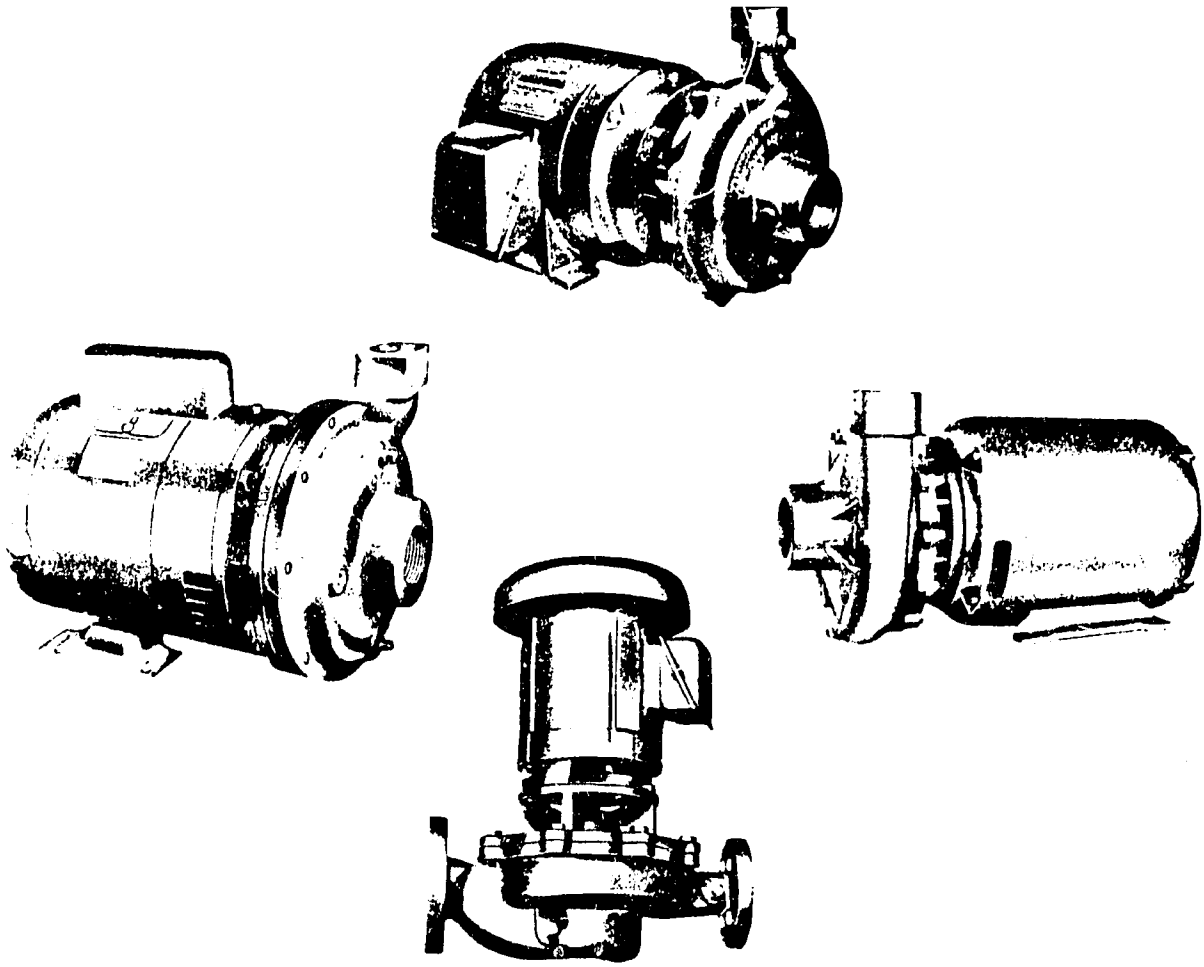

DUNHAM-BUSH

CENTRIFUGAL PUMPS
TYPE A5, A7, A9 AND PM7

Installation, Operation and Maintenance Instructions

63

CENTRIFUGAL PUMPS
TYPE A5, A7, A9 AND PM7

INDEX

DESCRIPTION	PAGE
INTRODUCTION	1
SECTION I INSTALLATION	
LOCATION	1
FOUNDATION	1
MOUNTING	1
PIPING	1
SUCTION PIPING	1
DISCHARGE, PIPING	2
PIPING FOR SPARE PUMPS	2
INSTALLING PUMP	2
SECTION II OPERATION	
PUMP STARTING	2 - 3
OPERATING AT REDUCED CAPACITY	3
OPERATING ROUTINE	3
STOPPING	3
SECTION III MAINTENANCE	
A5 PUMP DISASSEMBLY AND ASSEMBLY	3 - 4
A9 SERIES 'A' PUMP DISASSEMBLY AND ASSEMBLY	4 - 5
A7/PM7 DISASSEMBLY AND ASSEMBLY	5 - 7
A7A/PM7A DISASSEMBLY AND ASSEMBLY	7 - 9
SECTION IV TROUBLE SHOOTING, NOMENCLATURE, ORDERING PROCEDURE AND PARTS LIST	
TROUBLE SHOOTING	9
NOMENCLATURE	10
ORDERING PROCEDURE	10
A5 PUMPS AND PARTS LIST	
1/3 HP, 1/2 HP, AND 3/4 HP	11
1 HP, 1½ HP AND 2 HP	12
A9 SERIES 'A' PUMPS AND PARTS LIST	
1/2 HP, 3/4 HP AND 1 HP	13
1 1/2 HP	14
2 HP	15
3 HP	16
5 HP	17
7 1/2 HP	18
10 HP AND 15 HP	19
A7 PUMPS AND PARTS LIST	
3/4", 1 1/4" AND 1 1/2"	20
2" AND 2 1/2"	21
PM7 PUMPS AND PARTS LIST	
1", 1 1/4" AND 1 1/2"	22
2" AND 2 1/2"	23
A7A PUMPS AND PARTS LIST	
3/4", 1 1/4" AND 1 1/2"	24
PM7A PUMPS AND PARTS LIST	
1", 1 1/4" AND 1 1/2"	25

682

INTRODUCTION

The Dunham-Bush Type A5, A7 and A9 are radially split, single stage, motor mounted centrifugal pumps. The PM7 is a radially split, single stage, close coupled pipe mounted centrifugal pump. These pumps are supplied with an end face mechanical shaft seal installed, which is especially selected for reliability and life on the particular pump application. All pumps are supplied as complete units including motor.

SECTION -1
PUMP INSTALLATION

A. LOCATION

1. For satisfactory operation of any centrifugal pump it is necessary that adequate "Net Positive Suction Head" (NPSH) be available at the pump suction connection (NPSH is the total head in feet absolute, less the vapor pressure of the liquid in feet absolute, available to the pump). For this reason the pump should be located as close to the liquid source as possible.
2. Adequate head room should be provided for the use of installing equipment.
3. Adequate space should be allowed for inspection during pump operation.

B. FOUNDATION

1. The foundation must be solid and substantial enough to absorb mechanical vibration. In general concrete foundations are the most satisfactory and when used, bolts should be supplied which are imbedded for pump footing. Bolts should be long enough to insure proper tightening (minimum of six (6) threads should protrude beyond nut), and it is recommended that each bolt (standard or "J" type) be fitted with a pipe sleeve that is approximately 2½ times the bolt diameter and whose length is twice the inside diameter of the sleeve. When using a standard bolt (figure 1) a washer should be used to support the head of the bolt in the sleeve. After the concrete foundation has been poured, the pipe sleeve remains in place allowing for alignment with the holes in the motor feet.
2. When "J" type bolts (figure 2) are used the same procedure is used except that no washer is needed.
3. If the foundation has been laid, holes may be drilled and expansion bolts used to anchor the pump to the foundation.

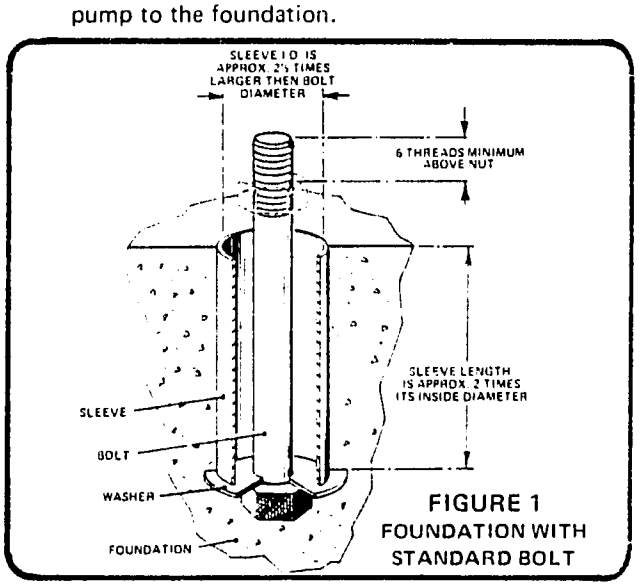

FIGURE 1
FOUNDATION WITH STANDARD BOLT

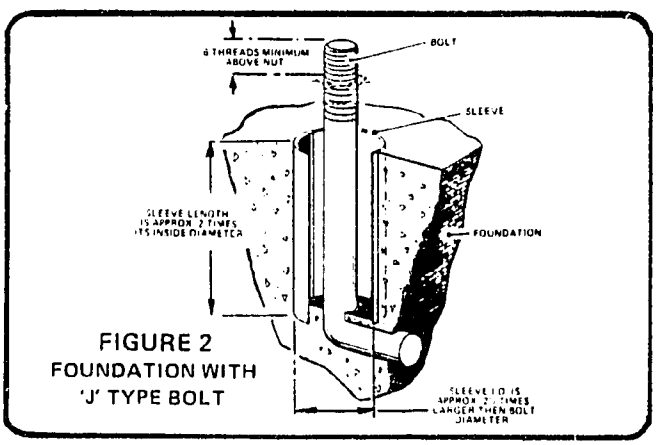

FIGURE 2
FOUNDATION WITH 'J' TYPE BOLT

C. MOUNTING PUMP

Foot Mounted

1. Uncrate the pump leaving all instructions attached and install at its' place of operation.
2. Locate the leveling plates and shims at each foundation bolt.
3. Level the motor perpendicular to shaft, shimming as necessary.
4. Level the motor parallel to shaft and tighten the nuts on the foundation bolts evenly.

Pipe Mounted

1. Horizontal Lines – Normally the pump is mounted with the motor perpendicular to the ground with the motor end up. The piping must be adequate to support both the piping and pump.
2. Vertical Lines – The motor will be parallel to the floor and may require additional support other than that offered by the piping.

D. PIPING

1. Both suction and discharge piping should be as short and as direct as possible. There should be as few fittings and bends as possible. Bends, where used should be of the long radius variety.
2. Piping should be supported near the pump to prevent strains from being transmitted to the pump, and piping at the pump suction and discharge should be as large or larger than the openings in the pump.
3. Gate valves and pressure gages should be installed in both the suction and discharge line to facilitate pump maintenance and performance checks.

E. SUCTION PIPING

1. Suction piping must be free of vapor trapping pockets
2. In horizontal piping leading to the pump only eccentric-reducers should be used (See Fig. 3 and 4).
3. The suction pipe must be free from air leaks and provisions should be made for the expansion of hot lines.

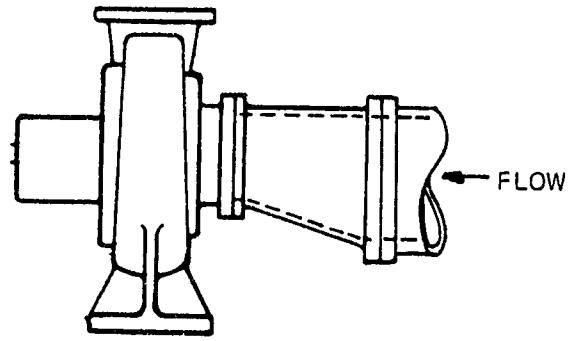

FIGURE 3
CORRECT SUCTION PIPING FOR ECCENTRIC REDUCER

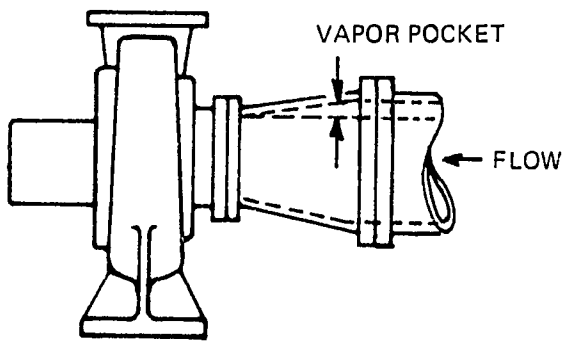

FIGURE 4
INCORRECT SUCTION PIPING FOR ECCENTRIC REDUCER

4. It is recommended that a strainer be installed near the pump suction inlet to catch scale or other foreign material. A pressure gage installed on each side of the strainer can be used for measuring the pressure drop across the strainer.

5. If a strainer or foot valve is to be used on the inlet end of the suction line, the free area through the strainer or valve should be approximately 2½ to 4 times the area of the suction pipe.

F. DISCHARGE PIPING

1. On some installations, a check valve and balancing cock in addition to a gate valve may be required in the discharge piping. The check valve would be used to prevent liquid from running back through the pump in case of failure of the motor. The balancing cock is used to control the pumps' operating capacity by providing a changeable control in the piping system. The gate valve would be used in priming, starting and shutting down the pump.

2. When valves are required in the discharge line, they should be located as near as possible to the pump.

3. In some applications when the pump may be operated with zero flow, provisions should be made for recirculating a portion of the liquid from the discharge to the suction of the pump to reduce the possibility of overheating.

G. PIPING FOR SPARE PUMPS

Spare pumps in high temperature service should be piped so that hot liquid from the discharge of the operating pump circulates continuously through a by-pass to the spare pump and back to the suction of the operating pump. This can greatly reduce thermal shock when the spare pump is started.

H. INSTALLING PUMP

1. Make up the piping to the suction and discharge connections of the pump. All piping must be properly supported by hangers and not by the pump. PM7 pumps must be supported within 18" of pump suction and discharge connections.

2. Wire the pump motor for the voltage required as specified on the wiring diagram located on the motor nameplate, or in cover of the motor terminal box. All wiring must be in accordance with local regulations. If the motor is damaged due to improper wiring, the guarantee is void.

SECTION – 2
PUMP OPERATION

A. STARTING PUMP

1. Open the suction and discharge valves to the pump. These pumps have a mechanical seal and must NOT be run dry. Open the cock at the top of the pump case to vent out any air.

   NOTE: a. If the pump is above the level of the liquid to be pumped, close the discharge valve. If the pump is below the level of the liquid, open the discharge valve 1½ to 2 turns.

   b. Prime the pump. All air and vapor must be removed. The pump case and suction pipe must be filled with liquid before the pump is started.

2. Rotate the pump shaft by hand (if possible) to be sure the pump is not binding. On some models the end of the motor shaft has a screwdriver slot. It may be used to turn the shaft. A check for sticking of the shaft should also be made after a prolonged pump shutdown.

3. Start the pump and check for correct rotation according to the arrow on the case. If it is running in the

wrong direction on three phase current, change any two leads to the motor. You must disconnect the power before changing the wiring.

4. Lack of capacity and head may indicate the passageways of the pump impeller have become clogged with foreign matter or that the motor speed is low. If speed of the motor is low, the wiring connections at the motor should be checked for miswiring or looseness. If the pump is wired for 460 volt current, but is actually operating on 230 volt current, the motor will never come up to proper speed and may burn out. If low voltage occurs, notify local power company. Slugging of air is another cause of low capacity and head on a closed system. Be sure the system is properly vented of all air – See further notes under Trouble Shooting – Section IV.

WARNING - DO NOT ATTEMPT TO OPERATE PUMP WITH SUCTION VALVE CLOSED!

5. As soon as the pump is up to full speed, slowly open the discharge valve until it is completely open. Do not let the pump run with the discharge valve closed.

6. Check the pressure gages on each side of the strainer in the suction line. A pressure drop across the strainer indicates it is becoming clogged with dirt or scale. In this case, the pump should be shut down and the strainer screen cleaned or replaced. A clogged strainer can cause damage to the pump.

7. The pump should be shut down if motor bearings overheat, if there is undue vibration or noise, or if it fails to develop its rated discharge pressure at operating speed.

B. OPERATING AT REDUCED CAPACITY

If the pump is connected to a constant speed driver or motor, the capacity of the pump can be reduced by throttling the discharge. When throttling the discharge, a by-pass connection may be used to by-pass sufficient liquid back to the suction inlet to prevent overheating.

C. OPERATING ROUTINE

1. Check the bearing temperatures periodically. If there is overheating, check the motor to insure adequate lubrication. Normal inspection consists of periodic checks of motor lubrication.

2. Lubricating the pump motor should be done in accordance with manufacturer's recommendations.

3. Check all seals for leakage.

4. Check the suction and discharge pressure gages. If the differential pressure drops critically, shut down the pump at once.

D. STOPPING

The pump should be shut down rapidly to keep liquid in the pump and to prevent the parts from seizing. After stopping the driver, close the discharge valve and then the inlet valve, in that order. When pumps are operating in parallel, it is sometimes necessary to close the discharge valve immediately after stopping the driver to prevent reverse rotation. If the pumps are to remain idle under freezing conditions, precautions, such as draining the case, should be taken to avoid damage.

SECTION – 3
MAINTENANCE INSTRUCTIONS

A. A5 PUMP DISASSEMBLY AND ASSEMBLY
(Ref. Fig. 5 & 6)

1. Disconnect the power to pump.

2. Close the valves in suction and discharge lines or drain the system.

3. Remove the 8 hex head screws (11) holding the head (7) to the case (1). Disassemble the head (7) from the case (1) by sliding the motor back.

4. Remove the case gasket (5) and clean the gasket surfaces on the case (1) and head (7).

5. Remove the plug covering the shaft end in motor.

6. Hold motor shaft from turning by using a large bladed screwdriver in slot of motor shaft and remove the impeller nut (3) by turning it counter clockwise.

7. Using a screwdriver in the shaft slot remove the impeller (2) and stop washer (4) from shaft by turning it counter clockwise.

8. Remove the head (7) and mechanical seal (6) from the shaft by first removing 4 hex cap screws (10) and then pulling the head (7) from the motor (8).

9. Remove slinger (9) from the shaft.

10. Remove stationary mechanical seal (6a) from the head (7).

11. Clean the motor shaft with solvent and inspect it for the scrapes, gouges and scratches. Lightly polish the shaft if necessary to remove blemishes.

12. Lightly lubricate the O.D. of the stationary member of the new seal. With the seal seat towards the impeller, press the seal firmly into the head recess. Make sure that the seat is level and square.

NOTE: Extreme caution must be exercised not to scratch, gouge or otherwise mar the sealing surface of the mechanical seal or leakage will likely result.

13. Replace the slinger (9) on the shaft.

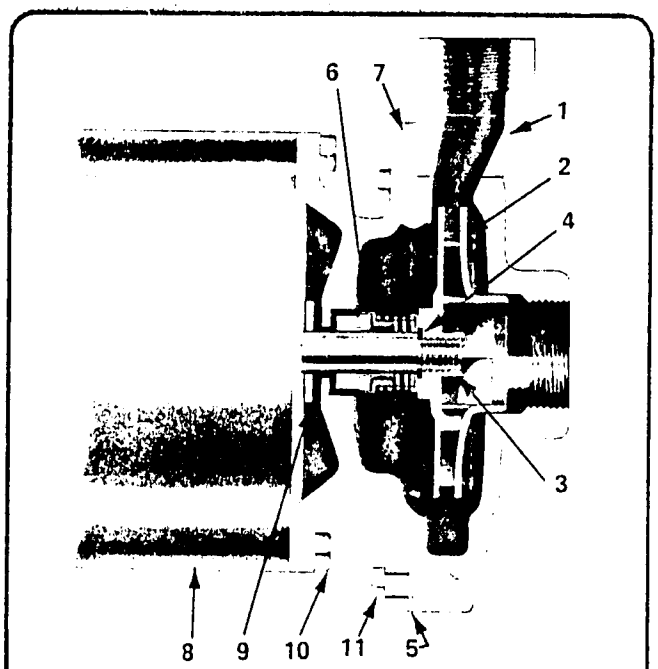

FIGURE 5
A5 PUMP

For Additional Information
On Seal (6)
Refer to Figure 6

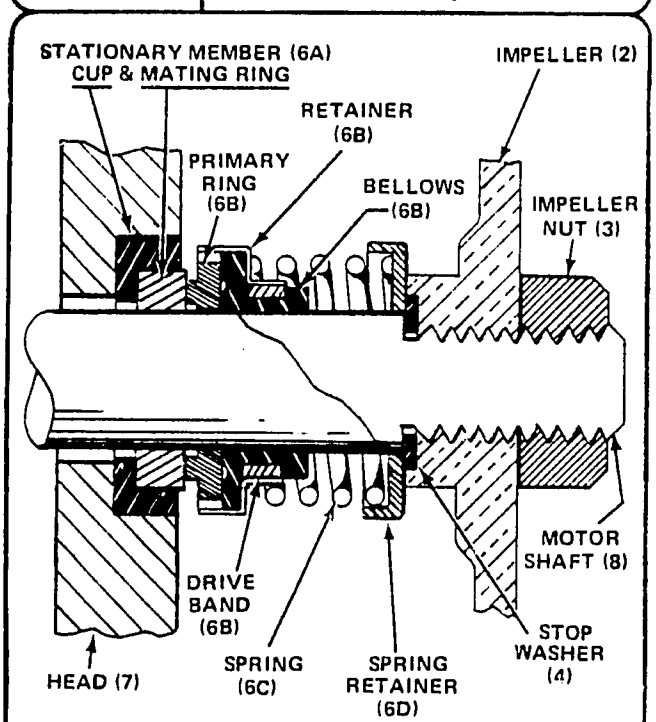

FIGURE 6
MECHANICAL SHAFT SEAL
FOR A5 PUMPS

14. Mount the head (7) on the motor (8) by using four hex head cap screws (10).

15. To assemble mechanical seal rotating element (6) onto the shaft:

    a. Lightly lubricate the I.D. of new seal boot (6B) and slide it over shaft with the carbon seal face towards the stationary seal face until seal faces meet.

    b. Place spring (6C) on the rotating member (seal boot 6B) so it seats properly against the shoulder.

    c. Place spring retainer (6D) against the spring. Be sure the rolled edge faces toward the spring.

16. Replace the stop washer (4) and screw the impeller (2) onto the shaft while holding shaft stationary with screwdriver placed in motor shaft slot. The stop washer has a radius machined on one of the outer diameter edges. The washer is to be assembled with this edge against the impeller. Make sure impeller is snugged up tight. Use a screwdriver to pry the spring retainer (6D) away from the impeller (2) to be sure that the retainer isn't caught between the shaft shoulder and impeller.

17. Replace impeller nut (3), snug nut up tight.

18. Place the gasket (5) on the head (7) and assemble both to the case (1) using 8 hex head cap screws (11).

19. Remount motor to base.

20. Open valves to pump and refill the system and check for leaks.

21. Reconnect power to pump.

B. A9 PUMP SERIES A DISASSEMBLY AND ASSEMBLY (Ref. Fig. 7 & 8)

1. Disconnect the power to pump.

2. Close the valves in suction and discharge lines or drain the system.

3. Remove the 12 hex head screws (13) holding the head (8) to the case (1). Disassemble the head (8) from the case (1) by sliding the motor back.

4. Remove impeller nut (3) by turning it counter clockwise.

5. Remove impeller (2) and its key (4) from the shaft.

6. To remove head (8), mechanical seal (7), gasket (5) and sleeve (11) remove the 4 hex head cap screws (14) and pull the head (8) from motor (9). Caution must be exercised not to scratch, mar or gouge the sleeve during this operation.

7. Remove slinger (10) and shield (12) from shaft.

8. Remove the mechanical seal stationary seat (7a) from the head (8).

9. Remove the gasket (6) from head (8) and clean gasket surfaces on both the case (1) and head (8).

10. Clean motor shaft with solvent.

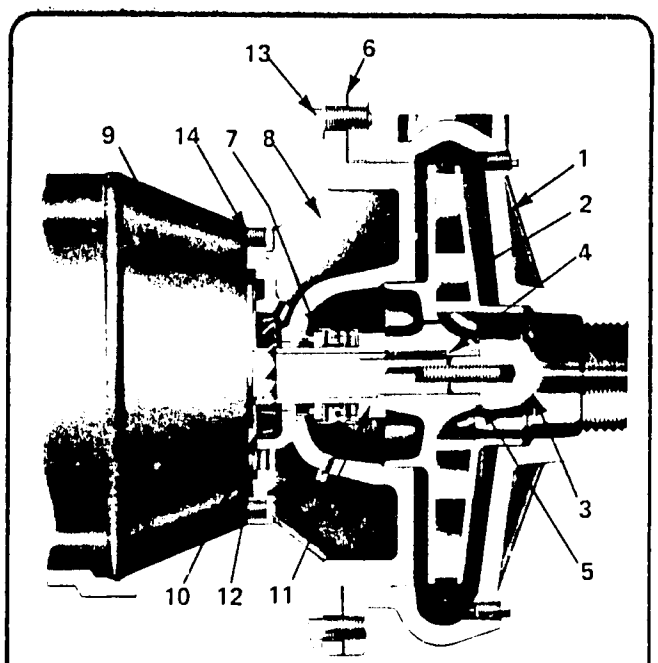

FIGURE 7
A9 PUMP

For Additional Information
On Seal (7)
Refer to Figure 8.

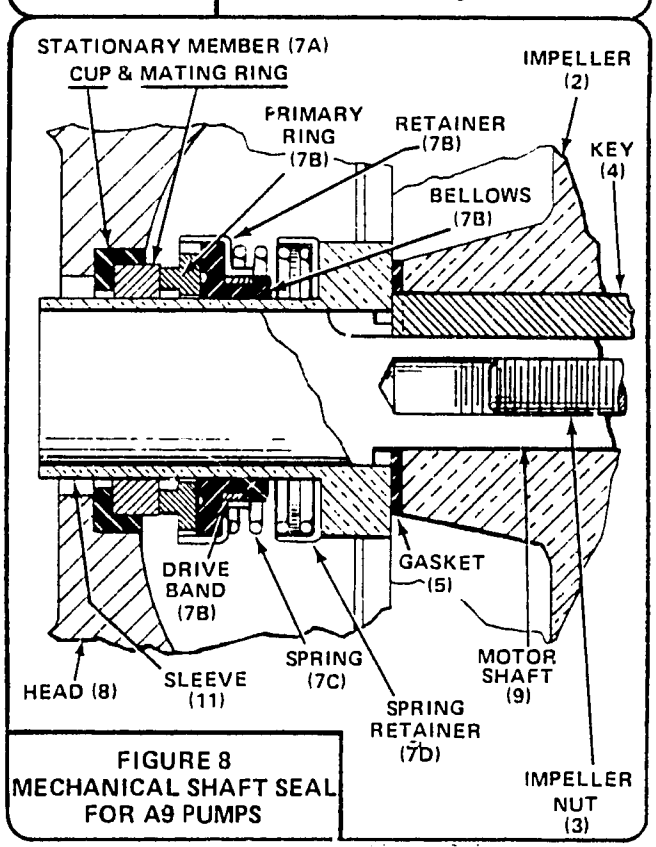

FIGURE 8
MECHANICAL SHAFT SEAL
FOR A9 PUMPS

11. Lightly oil O.D. of new seal stationary seat (7A). With the sealing face towards impeller, press the seal seat firmly into the head recess, being sure the seat is level and square.

Caution: Extreme care must be exercised not to scratch, mar or gouge the sealing face of the stationary seal or leakage will occur.

12. Replace shield (12) and slinger (10) onto shaft.

13. Mount the head (8) to the motor (9) by using 4 hex head cap screws (14).

14. To assemble mechanical-seal-rotating element (7B, C & D) onto the sleeve (11):

    a. Slip spring retainer (7D) over sleeve (11) with the bent edge facing away from the shoulder.

    b. Place spring (7C) over sleeve.

    c. Lightly lubricate I.D. of new seal boot (7B) and slide it over the sleeve with the carbon seal face away from sleeve shoulder.

15. Place a light coat of Teflon paste on I.D. of sleeve and slide it over the shaft until seal faces butt together firmly and squarely.

16. Brush both sides of gasket (5) with Teflon paste and position it on the sleeve (11).

17. Insert key (4) in keyway and replace the impeller (2) on shaft.

18. Place a small amount of Teflon paste on flat side of impeller nut (3) and replace it on the shaft. Turn the impeller to check its alignment.

19. Replace the gasket (6) and assemble the pump head (8) to the pump case (1) using 12 hex head cap screws (13).

20. Remount the motor to base.

21. Open the valves to pump and refill the system and check the pump for leaks.

22. Reconnect power to the pump.

C. A7/PM7 PUMP DISASSEMBLY AND ASSEMBLY (Ref. Fig. 9 & 10) WITH JM FRAME MOTOR

1. Disconnect power to pump.

2. Close the valves in suction and discharge lines or drain the system.

3. (PM7 Only). Remove the seal flush piping line (8 & 9) connected between the head (7) and pump case (11).

4. Remove 8 hex head cap screws (1), holding the head (7) to the case (11) and remove motor head assembly.

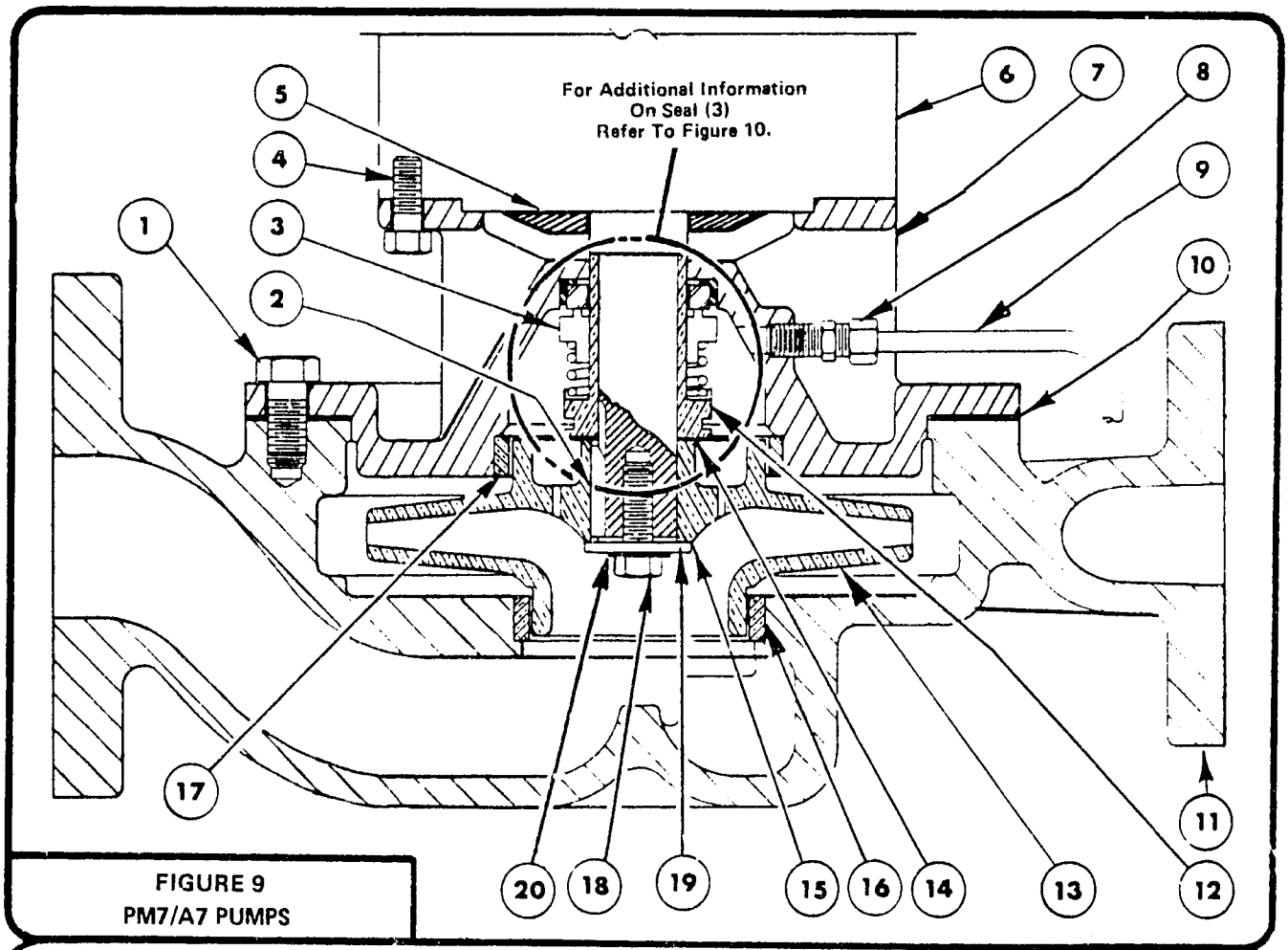

FIGURE 9
PM7/A7 PUMPS

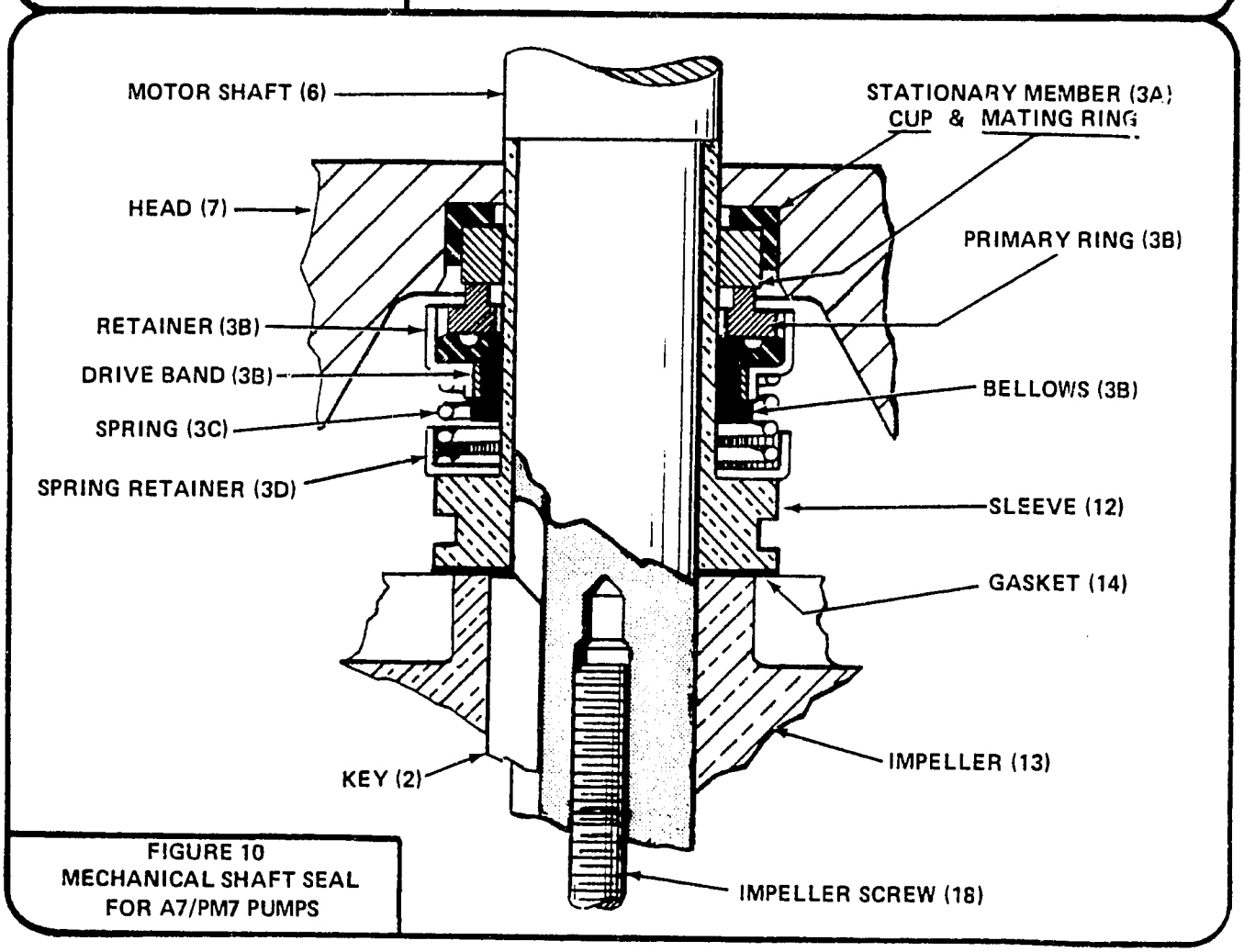

FIGURE 10
MECHANICAL SHAFT SEAL
FOR A7/PM7 PUMPS

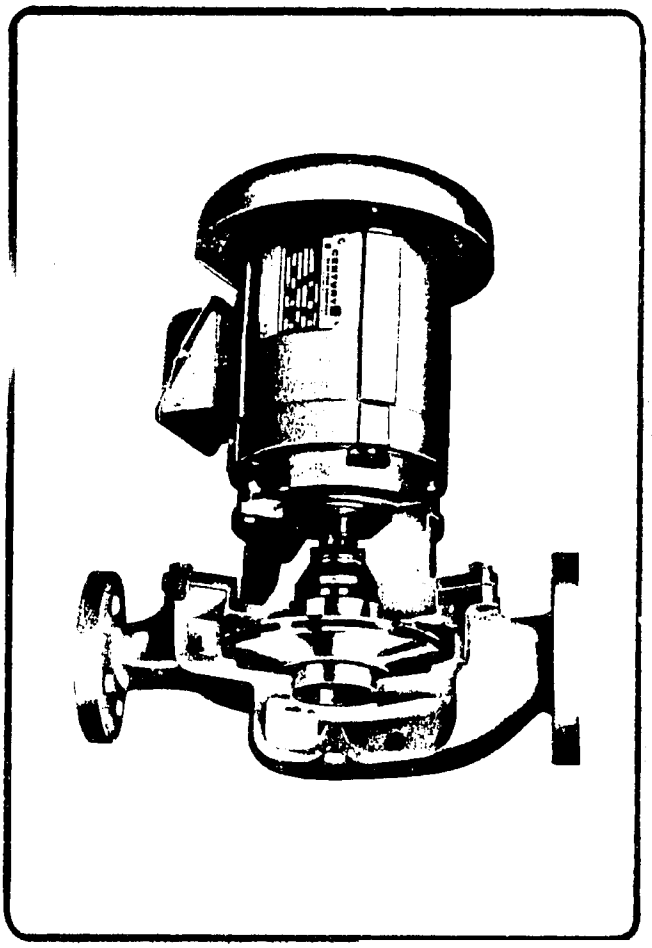

5. Remove the case gasket (10) and clean the gasket surfaces of both the head (7) and case (11).

6. Remove the impeller screw (18) by turning it counter clockwise and remove washers (19) and (20) and the gasket (15). Clean the gasket surfaces.

7. Remove the impeller (13) and its key (2) from the shaft motor.

8. Remove the mechanical seal (3) and sleeve (12) from the shaft. Remove gasket (14) from either the sleeve or impeller and clean the gasket surfaces.

9. Remove head (7) from the motor (6) by removing 4 hex head cap screws (4).

10. Clean the motor shaft with solvent.

11. Remove the stationary member (3A) of the mechanical seal from the head (7).

12. Lightly lubricate the O.D. of new mechanical seal stationary seal (3A) and press it into the recess of the head (7). Be sure that the seal is level and square.

    Caution: Extreme care must be exercised not to scratch, mar or gouge the sealing face of the stationary seal or leakage will occur.

13. Assemble the head (7) onto the motor (6) using 4 hex head cap screws (4).

14. Assemble the rotating seal elements onto the sleeve (12).

    a. Slip spring retainer (3D) over sleeve (12) with the bent edge facing away from the shoulder.

    b. Place spring (3C) over sleeve.

    c. Lightly lubricate I.D. of new seal boot (3B) and slide it over sleeve with the carbon seal face away from sleeve shoulder.

15. Place a light coat of Teflon paste on I.D. of the sleeve and slide it over the shaft until seal faces butt together firmly and squarely.

16. Brush both sides of gasket (14) with Teflon paste and position it on the sleeve (12).

17. Replace key (2) in keyway and slide impeller (13) onto shaft.

18. Brush both sides of gasket (15) with Teflon paste and place on impeller. Place the sealing washer (19) and washer (20) on the impeller cap screw (18) and tighten onto the shaft.

19. Place gasket (10) on head (7) and assemble it to the case (11) using 9 hex head cap screws (1).

20. Replace the seal flush piping (8 & 9).

21. Open the valves to the pump or refill system and check pump for leaks.

22. Reconnect power to pump and check again for leaks.

D. A7A/PM7A PUMP DISASSEMBLY AND ASSEMBLY (Ref. Fig. 11 & 12) WITH JET PUMP MOTOR

1. Disconnect power to pump

2. Close the valves in the suction and discharge piping or drain the system.

3. (PM7A Only) Remove the seal flush piping line (8 & 9) between the head (7) and case (11).

4. Remove 8 hex head cap screws (1) holding the head (7) to case (11) and remove the motor-head assembly.

5. Remove the case gasket (10) and clean the gasket surfaces of both the head (7) and the case (11).

6. Remove the impeller (12) and the impeller nut (15) by turning counter clockwise. Remove the impeller nut (15) from the impeller (12).

7. Remove loose mechanical seal parts from shaft.

8. Loosen 4 hex screws (4) between the motor and head and remove the retainer clips (3). Remove head (7) from motor (6).

9. Remove slinger (5) from the motor shaft and clean shaft with a solvent. Inspect it for scratches and lightly polish it if necessary to remove blemishes.

10. Remove mechanical stationary seal (2A) from head (7).

11. Lightly lubricate the O.D. of a new mechanical stationary seal (2A) and press into recess of head (7) making sure that the seal is level and square.

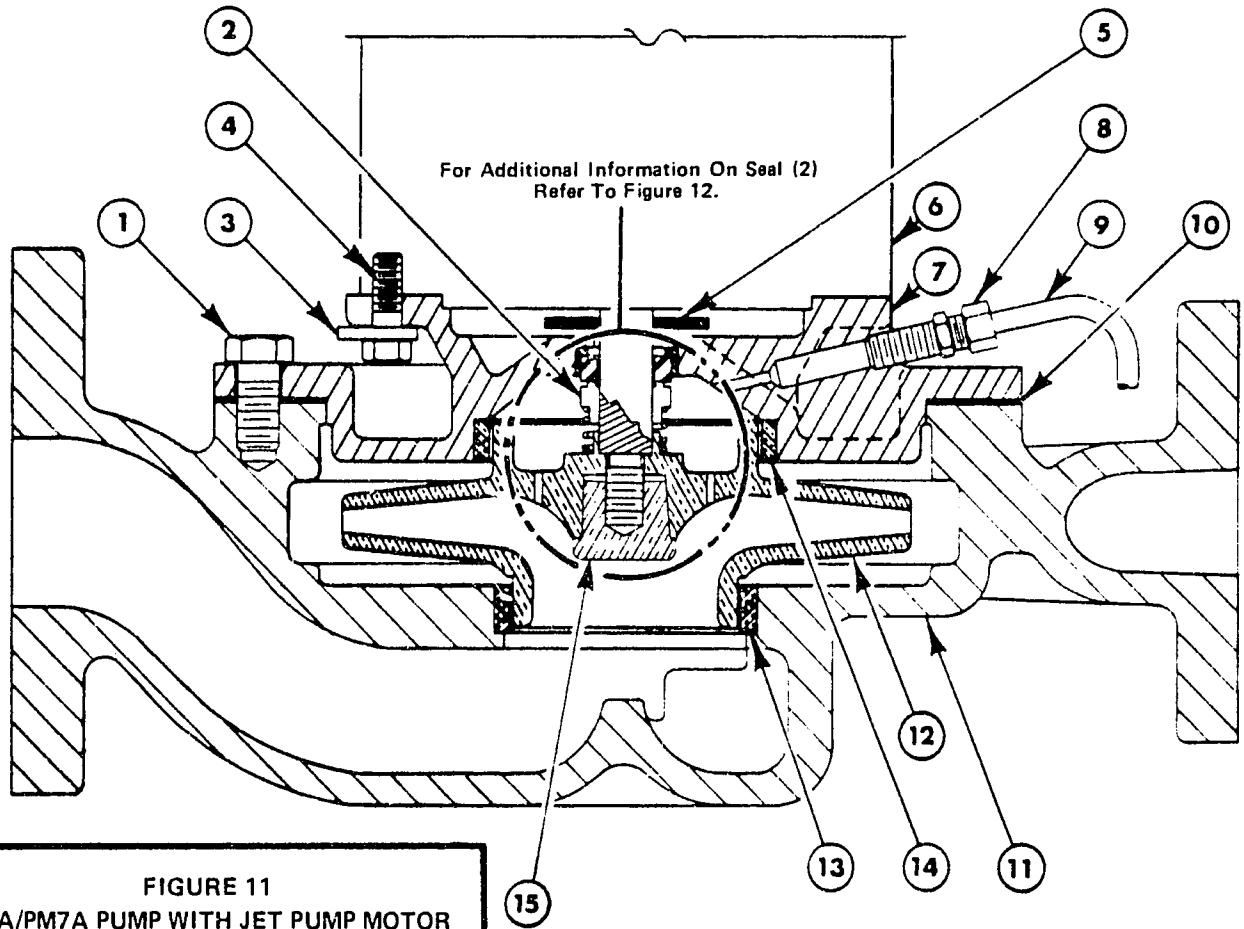

FIGURE 11
A7A/PM7A PUMP WITH JET PUMP MOTOR

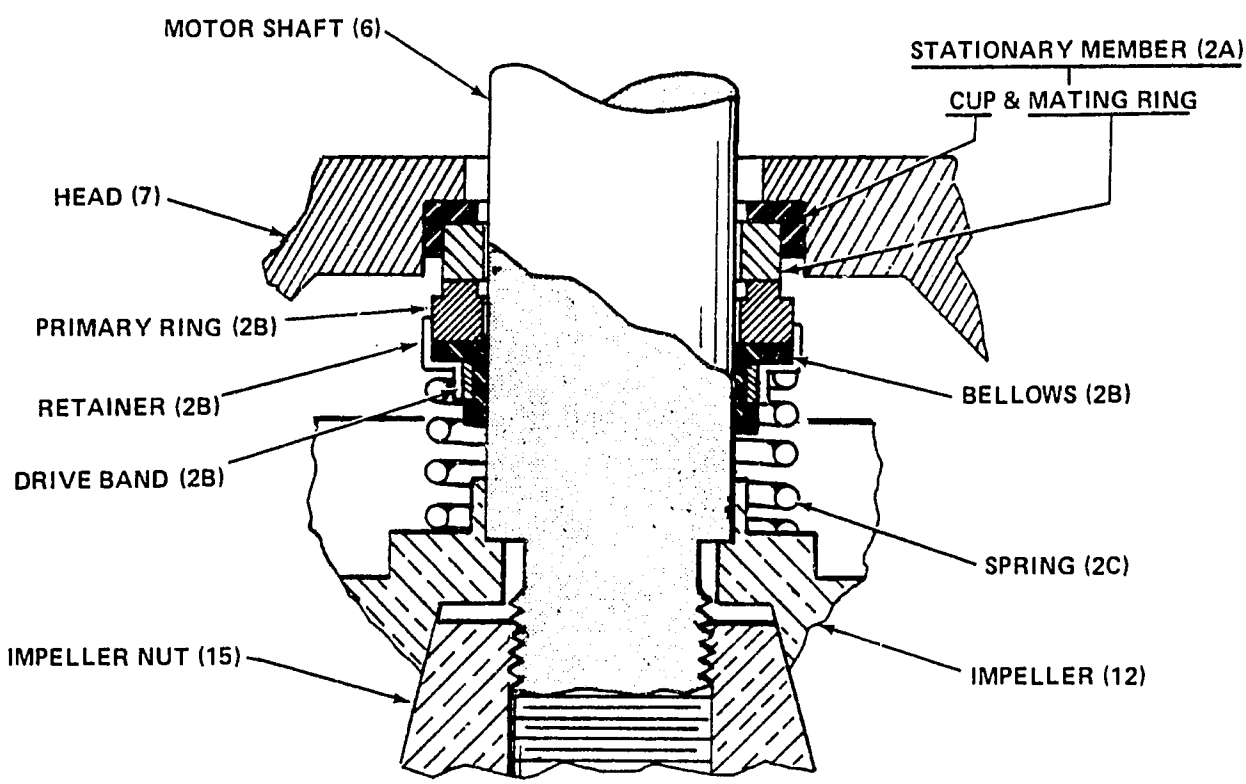

FIGURE 12
MECHANICAL SHAFT SEAL
FOR A7A/PM7A PUMPS

11. (Continued)

Caution: Extreme care must be exercised not to scratch, mar or gouge the face of the stationary seal as seal leakage will result.

12. Replace slinger (5) on the shaft and assemble the head (7) to the motor (6) by replacing the 4 retainer clips (3) on shank of cap screws (4). Tighten the cap screws.

13. Assemble rotating seal elements onto shaft.
    a. Lightly lubricate the I.D. of new seal boot (2B) and slide it over the shaft with the carbon seal face towards the stationary seal face.
    b. Place spring (2C) over shaft.

14. Replace impeller (12). Be sure the spring (2C) is seated properly against the impeller face.

15. Replace the impeller nut (15) and torque it to 15 lbs.

16. Place the gasket (10) on head (7) and assemble it to the case (11) using 8 hex head screws.

17. Replace the seal flush line (8 and 9).

18. Open valves to the pump and refill the system. Check the pump for leaks.

19. Reconnect power to pump and check again for leaks.

SECTION IV - TROUBLE SHOOTING

Operating troubles and their probable causes are as follows:

A. INSUFFICIENT OR NO DISCHARGE

1. Wrong direction of rotation.
2. Pump not primed.
3. Suction line is not full of liquid.
4. Air or vapor in suction line.
5. Suction pipe not submerged enough.
6. Available NPSH not sufficient.
7. Pump not up to rated speed.
8. Too much system head.

B. INSUFFICIENT PRESSURE

1. Wrong direction of rotation.
2. Suction line not full of liquid.
3. Air or vapor in liquid.
4. Air leaks in suction line.

B. INSUFFICIENT PRESSURE (Continued)

5. Suction line not submerged enough.
6. Available NPSH not sufficient.
7. Pump not up to rated speed.
8. Mechanical defects:
    a. Impeller damaged.
    b. Internal leakage (clearances).

C. CAVITATION AND NOISE

1. Air or gas in liquid.
2. Suction line not filled with liquid.
3. Suction line not submerged enough.
4. Available NPSH not sufficient.

D. PUMP LOSES SUCTION AFTER STARTING

1. Suction line not full of liquid.
2. Air leaks in suction line.
3. Air or vapor in liquid.
4. Air or vapor in suction line.
5. Suction line not submerged enough.
6. Available NPSH not sufficient.

E. EXCESSIVE POWER CONSUMPTION

1. Speed too high
2. Insufficient head.
3. Mechanical Defects:
    a. Shaft bent.
    b. Rotating element dragging.
    c. Piping improperly supported.

F. VIBRATION

1. Suction line not full of liquid.
2. Air or vapor in suction line.
3. Worn or loose motor bearings.
4. Rotating element out of balance.
5. Shaft bent.
6. Foundation not rigid.
7. Vibration in the driver.
8. Wrong location of control valve.
9. Piping improperly supported.

NOMENCLATURE

10 HP - 2½ - A9 - D 65 S - 2 - A

- HORSEPOWER
- DISCHARGE (IN INCHES)
- TYPE MODEL
- IMPELLER STYLE
- SERIES
- RPM: 1 - 1750; 2 - 3450
- STANDARD IMPELLER
- IMPELLER DIAMETER
  - 6 5
  - EIGHTS OF AN INCH (5/8")
  - INCHES (6")
  - TOTAL—6-5/8 INCHES

ORDERING PROCEDURE

1. Complete part number and description is required when ordering.
2. When a part number is not known or shown in the parts catalog, the complete model and serial number of the unit on which the part is to be used must be given.
3. Send all orders to:

   DUNHAM-BUSH, INC., PARTS DEPT.
   811 E. MAIN ST.
   MARSHALLTOWN, IOWA, 50158

4. Prices can be found in the latest revision of Form 17448 and are for one item or kit as applicable.
5. Minimum billing is $25.00.
6. All prices are subject to federal, state, local or other taxes which may be applicable.
7. All orders requiring special handling will have a surcharge of $25.00 or the actual cost of this requirement whichever is greater.
8. Dunham-Bush reserves the right to substitute parts if they are interchangeable with those ordered. The invoice will reflect the cost of the actual part shipped.
9. Refer to the latest revision of Form 1278 for terms of sale.

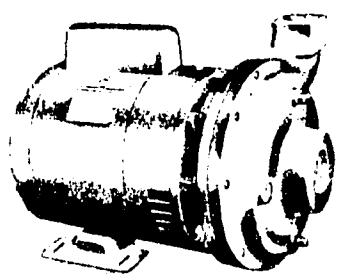

TYPE A5 PUMP

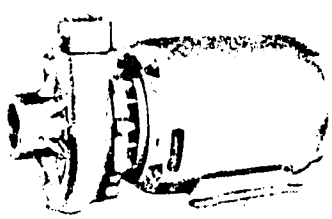

TYPE A9 PUMP

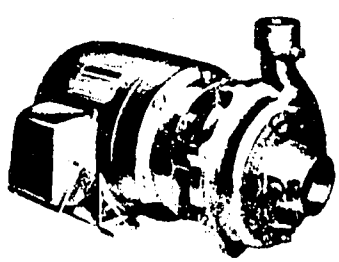

TYPE A7A AND A7 PUMPS

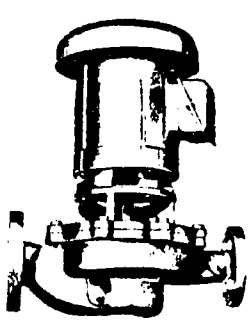

TYPE PM7 AND PM7A PUMPS

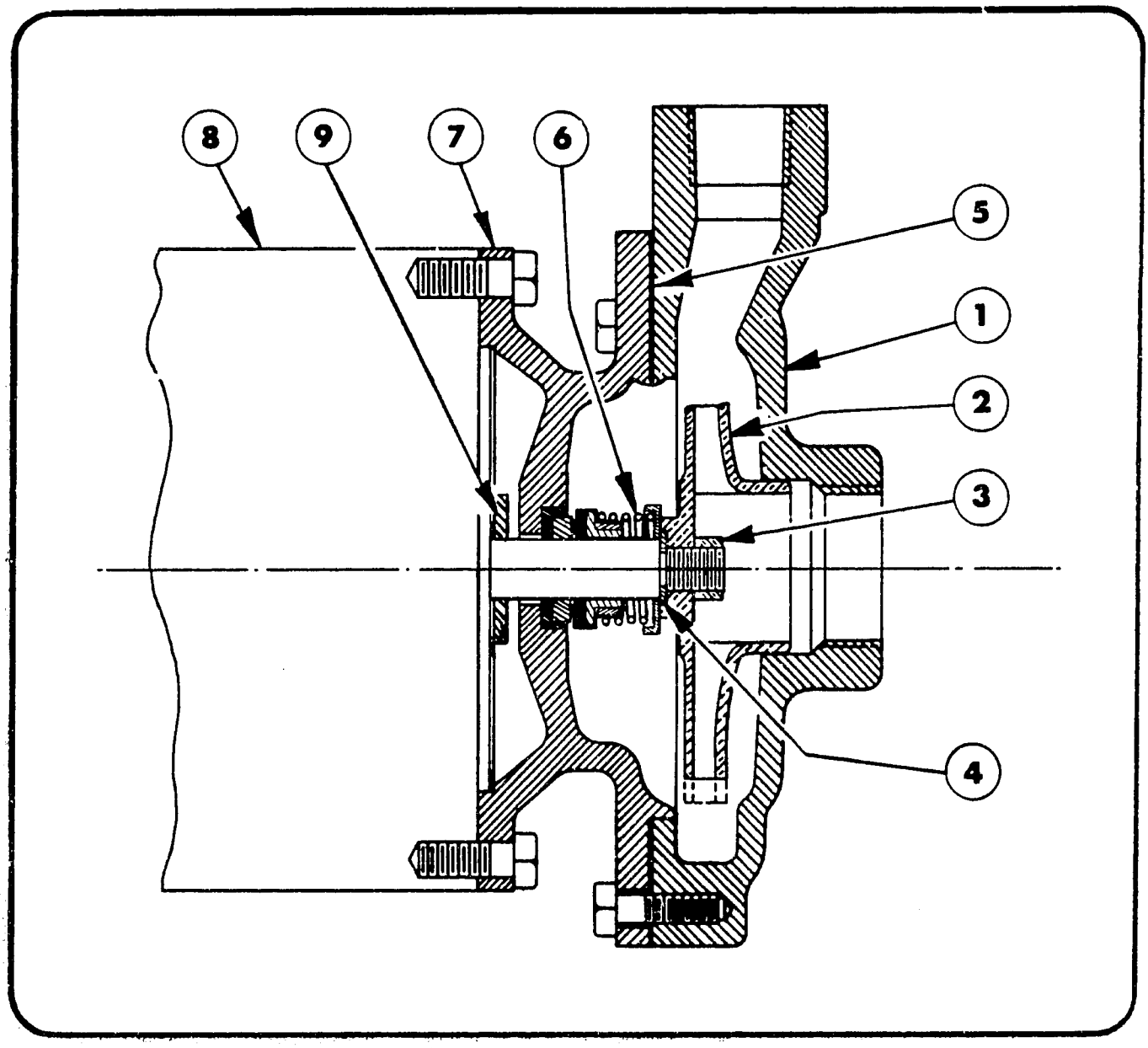

A5 PUMP AND PARTS LIST

1/3 HP, 1/2 HP AND 3/4 HP

	PART NUMBER AND DESCRIPTION	1/3 HP 1" 1φ & 3φ A5C2	1/3 HP 1 1/2" 1φ & 3φ A5C2	1/2 HP 1" 1φ & 3φ A5C2	1/2 HP 1 1/2" 1φ & 3φ A5C2	3/4 HP 3/4" 1φ & 3φ A5C2	3/4 HP 1 1/2" 1φ & 3φ A5C2
1	CASE (CAST IRON) CASE (BRONZE)	E6046 E6078	E6048 E6080	E6045 E6078	E6048 E6080	E6041 E6077	E6048 E6080
2	IMPELLER	D5197x 3 15/16"	D5203x 3 1/4"	D5197x 4 5/16"	D5203x 3 5/8"	D5193x 4 5/16"	D5203x 4 3/32"
3	NUT - IMPELLER	P-116	P-116	P-116	P-116	P-116	P-116
4	WASHER	C8709	C8709	C8709	C8709	C8709	C8709
5	GASKET-CASE *	D5352	D5352	D5352	D5352	D5352	D5352
6	SEAL-SHAFT *	472	472	472	472	472	472
7	HEAD (CAST IRON) HEAD (BRONZE)	E6042 E6081	E6042 E6081	E6042 E6081	E6042 E6081	E6042 E6081	E6042 E6081
8	MOTOR	Contact Dunham-Bush, Inc., Marshalltown, Iowa					
9	SLINGER	C8854	C8854	C8854	C8854	C8854	C8854

NOTES: 1. NON-STANDARD pump parts are not shown. When ordering repair parts, refer to page 10 of this catalog.
2. * = These parts are required when replacing shaft seal.

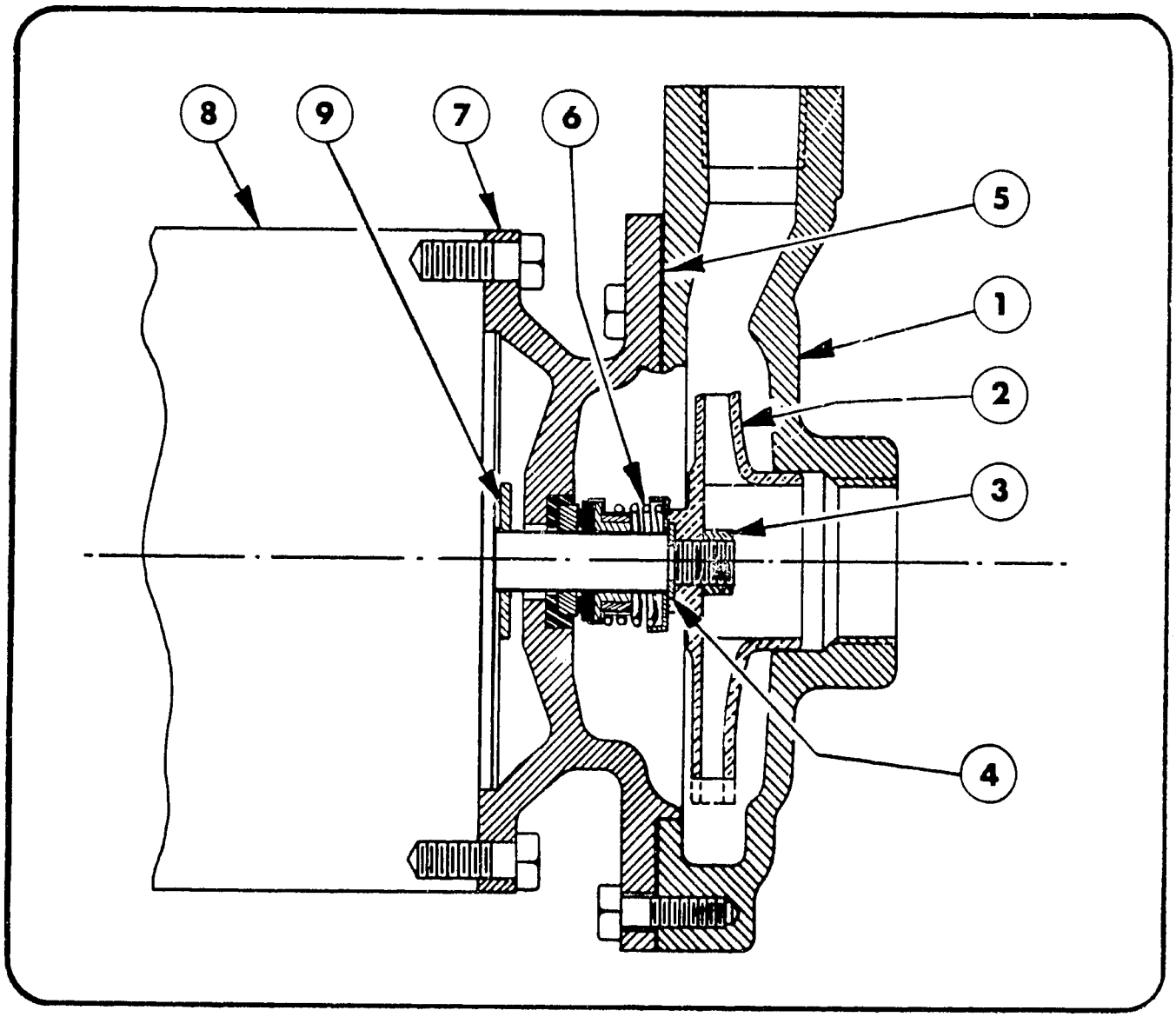

A5 PUMP AND PARTS LIST

1 HP, 1½ HP AND 2 HP

	PART NUMBER AND DESCRIPTION	1 HP ¾" 1ϕ & 3ϕ A5A2	1 HP 1½" 1ϕ & 3ϕ A5C2	1½ HP ¾" 1ϕ & 3ϕ A5A2	1½ HP 1¼" 1ϕ & 3ϕ A5B2	2 HP 1" 1ϕ & 3ϕ A5A2	2 HP 1¼" 1ϕ & 3ϕ A5B2	2 HP 1½" 1ϕ & 3ϕ A5B2
1	CASE (CAST IRON) CASE (BRONZE)	E6041 E6077	E6048 E6080	E6041 E6077	E6047 E6079	E6046 E6078	E6047 E6079	E6048 E6080
2	IMPELLER	D5193x 4 9/16"	D5203x 4 5/16"	D5193x 5"	D5199x 4 1/8"	D5195x 4 1/2"	D5199x 4 1/2"	D5202x 4 1/8"
3	NUT–IMPELLER	P-116	P-116	P-116	P-116	P-116	P-116	P-116
4	WASHER	C8709	C8709	C8709	C8709	C8709	C8709	C8709
5	GASKET–CASE *	D5352	D5352	D5352	D5352	D5352	D5352	D5352
6	SEAL–SHAFT *	472	472	472	472	472	472	472
7	HEAD (CAST IRON) HEAD (BRONZE)	E6042 E6081	E6042 E6081	E6042 E6081	E6042 E6081	E6042 E6081	E6042 E6081	E6042 E6081
8	MOTOR	Contact Dunham-Bush, Inc., Marshalltown, Iowa						
9	SLINGER	C8854	C8854	C8854	C8854	C8854	C8854	C8854

NOTES: 1. NON-STANDARD pump parts are not shown. When ordering repair parts, refer to page 10 of this catalog.
2. * = These parts are required when replacing shaft seal.

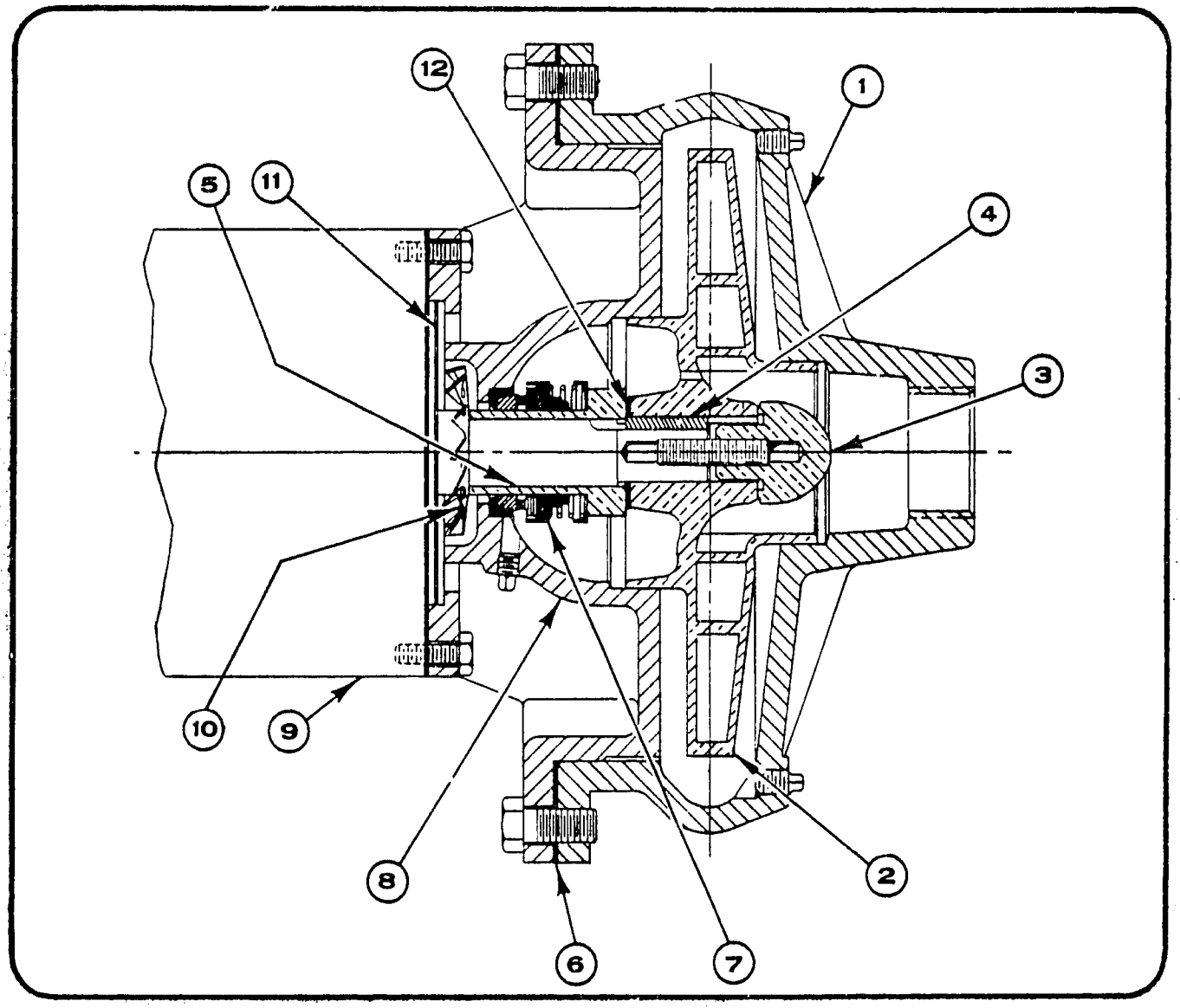

A9 PUMP AND PARTS LIST
SERIES A - ½ HP, ¾ HP AND 1 HP

	PART NUMBER AND DESCRIPTION	½ HP 1" 1φ & 3φ A9C1A	¾ HP 1" 1φ & 3φ A9C1A	¾ HP 1¼" 1φ & 3φ A9D1A	1 HP 1" 1φ & 3φ A9C1A	1 HP 1¼" 1φ & 3φ A9D1A	1 HP 2" 1φ & 3φ A9D1A
1	CASE (CAST IRON) CASE (BRONZE)	F541 D2-76	F541 D2-76	F540 D2-74	F541 D2-76	F540 D2-74	F544 D2-80
2	IMPELLER (BRONZE)	C2-3211X 6 1/16"	C2-3211X 6 3/4"	C2-3213X 4 15/16"	C2-3211X 7 5/16"	C2-3213X 5 15/16"	C2-3214X 5 3/8
3	STUD & NUT ASSEMBLY	C10035 A2-3898	C10035 A2-3898	C10035 A2-3898	C10035 A2-3898	C10035 A2-3898	C10035 A2-3898
4	KEY	C7763	C7763	C7763	C7763	C7763	C7763
5	SLEEVE *	A2-3905	A2-3905	A2-3905	A2-3905	A2-3905	A2-3905
6	GASKET *	D5450	D5450	D5450	D5450	D5450	D5450
7	SHAFT SEAL *	3179	3179	3179	3179	3179	3179
8	HEAD (CAST IRON) HEAD (BRONZE)	D2-1478 D2-1480	D2-1478 D2-1480	D2-1478 D2-1480	D2-1478 D2-1480	D2-1478 D2-1480	D2-1478 D2-1480
9	MOTOR	Contact Dunham-Bush, Inc., Marshalltown, Iowa					
10	SLINGER	C10038	C10038	C10038	C10038	C10038	C10038
11	SHIELD	C8958	C8958	C8958	C8958	C8958	C8958
12	GASKET *	A2-3020	A2-3020	A2-3020	A2-3020	A2-3020	A2-3020

NOTES: 1. NON-STANDARD pump parts are not shown. When ordering repair parts, refer to page 10 of this catalog.
2. * = These parts are required when replacing shaft seal.

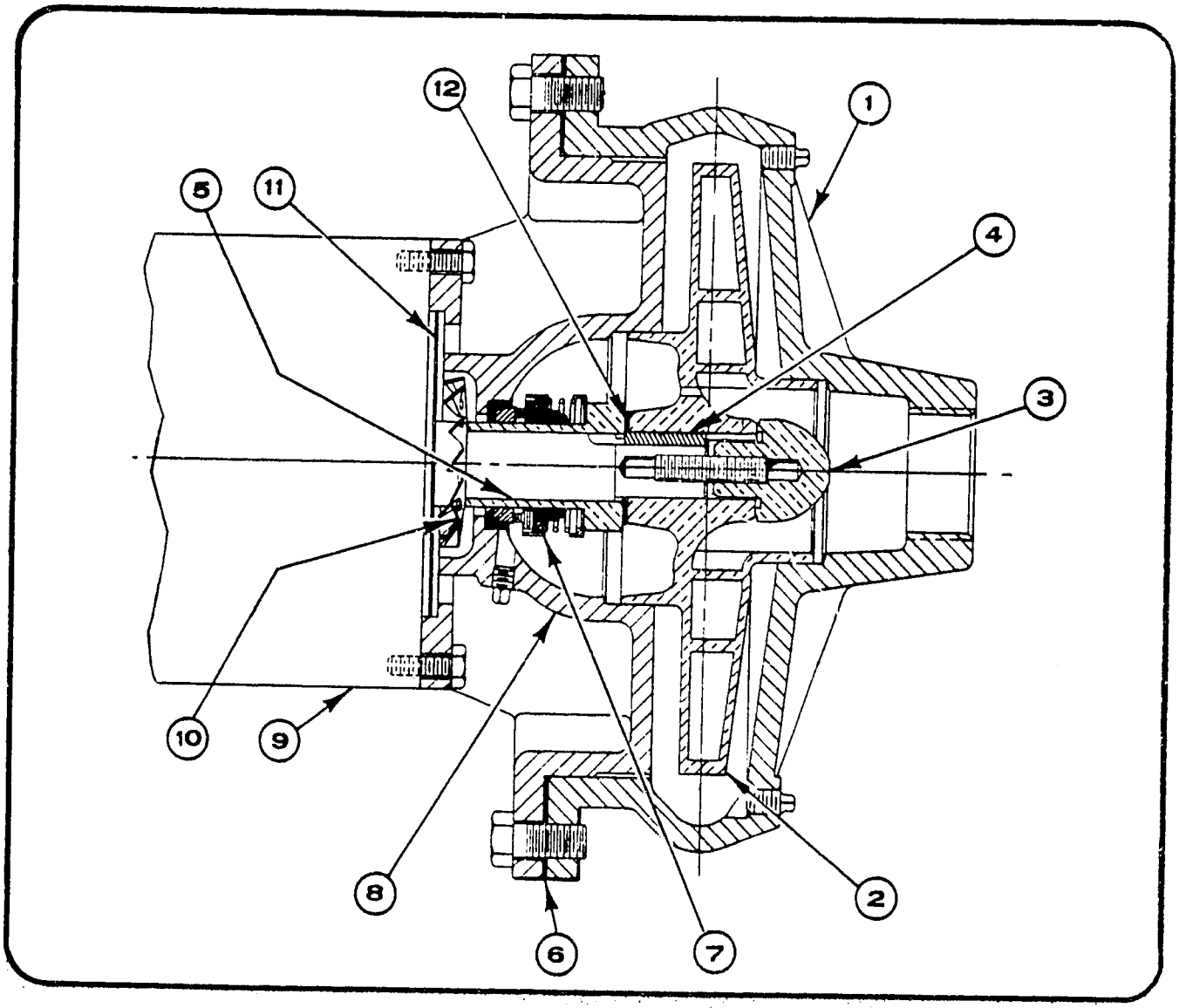

A9 PUMP AND PARTS LIST
SERIES A – 1½ HP

PART NUMBER AND DESCRIPTION	1½ HP 1" 1φ & 3φ A9C1A	1½ HP 1¼" 1φ & 3φ A9D1A	1½ HP 2" 1φ & 3φ A9D1A	1½ HP 2½" 1φ & 3φ A9D1A
1 CASE (CAST IRON) CASE (BRONZE)	D541 D2-76	F540 D2-74	F544 D2-80	F545 D2-79
2 IMPELLER (BRONZE)	C2-3211X $8^{7}/_{16}$"	C2-3213X $6^{3}/_{8}$"	C2-3214X $5^{29}/_{32}$"	C2-3215X $5^{21}/_{33}$"
3 STUD & NUT ASSEMBLY	C10035 A2-3898	C10035 A2-3898	C10035 A2-3898	C10035 A2-3898
4 KEY	C7763	C7763	C7763	C7763
5 SLEEVE *	A2-3905	A2-3905	A2-3905	A2-3905
6 GASKET *	D5450	D5450	D5450	D5450
7 SHAFT SEAL *	3179	3179	3179	3179
8 HEAD (CAST IRON) HEAD (BRONZE)	D2-1478 D2-1480	D2-1478 D2-1480	D2-1478 D2-1479	D2-1478 D2-1480
9 MOTOR	Contact Dunham-Bush, Inc., Marshalltown, Iowa			
10 SLINGER	C10038	C10038	C10038	C10038
11 SHIELD	C8958	C8958	C8958	C8958
12 GASKET *	A2-3020	A2-3020	A2-3020	A2-3020

NOTES: 1. NON-STANDARD pump parts are not shown. When ordering repair parts, refer to page 10 of this catalog.
2. * = These parts are required when replacing shaft seal.

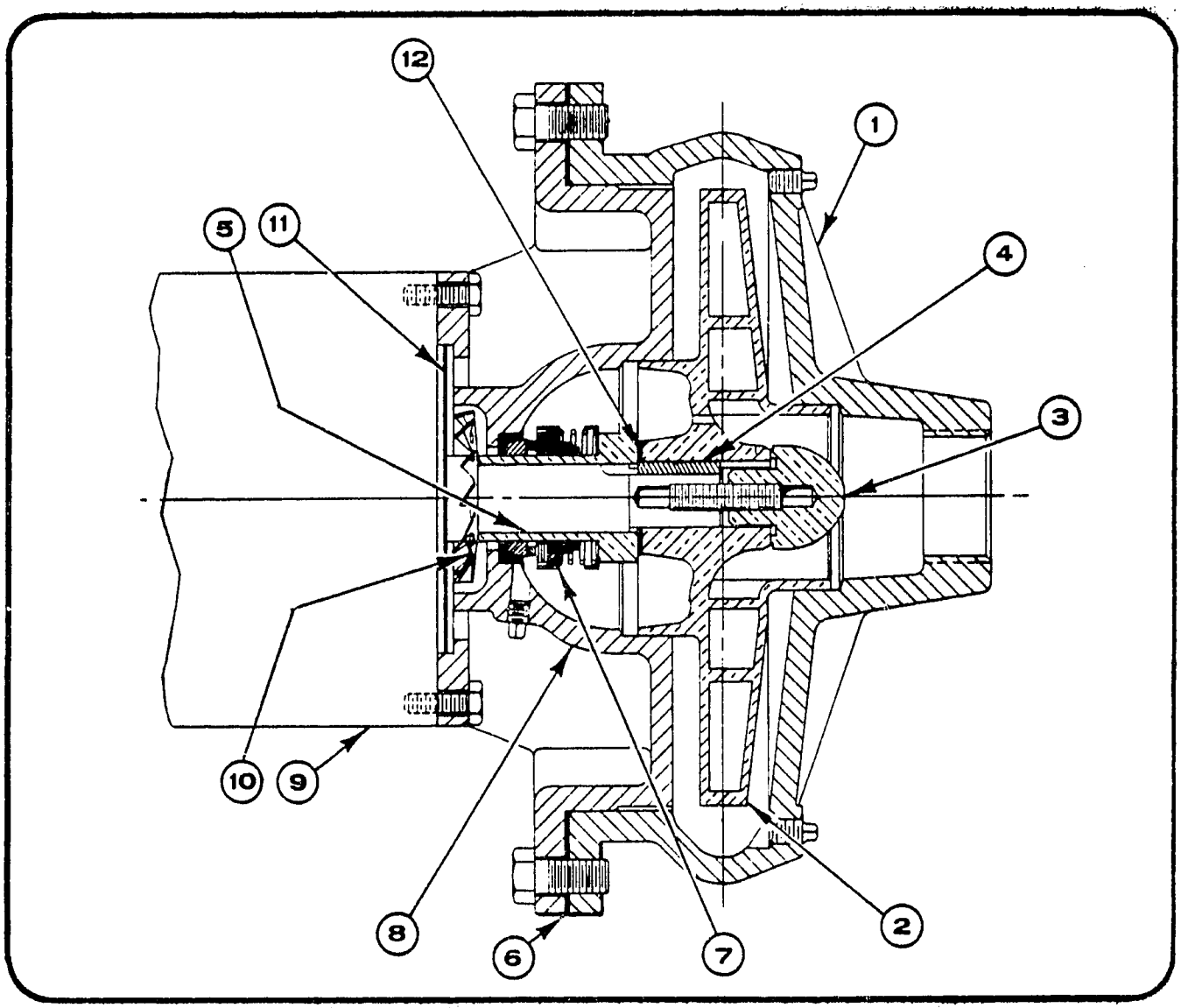

A9 PUMP AND PARTS LIST
SERIES A – 2 HP

	PART NUMBER AND DESCRIPTION	2 HP 1" 1ϕ A9C1A	2 HP 1" 3ϕ A9C1A	2 HP 1¼" 1ϕ A9D1A	2 HP 1¼" 3ϕ A9D1A	2 HP 2" 1ϕ D9D1A	2 HP 2" 3ϕ A9D1A	2 HP 2½" 1ϕ A9D1A	2 HP 2½" 3ϕ A9D1A
1	CASE (CAST IRON) CASE (BRONZE)	F541 D2-76	F541 D2-76	F540 D2-74	F540 D2-74	F544 D2-80	F544 D2-80	F545 D2-79	F545 D2-79
2	IMPELLER (BRONZE)	C2-3211X 9"	C2-3211X 9"	C2-3213X $7^3/_{16}$"	C2-3213X $7^3/_{16}$"	C2-3214X $6^1/_2$"	C2-3214X $6^1/_2$"	C2-3215X $6^1/_8$"	C2-3215X $6^1/_8$"
3	STUD & NUT ASSEMBLY	C10035 A2-3898	C10035 A2-3898	C10035 A2-3898	C10035 A2-3898	C10035 A2-3898	C10035 A2-3898	C10035 A2-3898	C10035 A2-3898
4	KEY	C7763	C7763	C7763	C7763	C7763	C7763	C7763	C7763
5	SLEEVE *	A2-3905	A2-3905	A2-3905	A2-3905	A2-3905	A2-3905	A2-3905	A2-3905
6	GASKET *	D5450	D5450	D5450	D5450	D5450	D5450	D5450	D5450
7	SHAFT SEAL *	3179	3179	3179	3179	3179	3179	3179	3179
8	HEAD (CAST IRON) HEAD (BRONZE)	D2-1478 D2-1480	D2-1478 D2-1480	D2-1478 D2-1480	D2-1478 D2-1480	D2-1478 D2-1480	D2-1478 D2-1480	D2-1478 D2-1480	D2-1478 D2-1480
9	MOTOR	Contact Dunham-Bush, Inc., Marshalltown, Iowa							
10	SLINGER	C10038	C10038	C10038	C10038	C10038	C10038	C10038	C10038
11	SHIELD	C8958	C8958	C8958	C8958	C8958	C8958	C8958	C8958
12	GASKET *	A2-3020	A2-3020	A2-3020	A2-3020	A2-3020	A2-3020	A2-3020	A2-3020

NOTES: 1. NON-STANDARD pump parts are not shown. When ordering repair parts, refer to page 10 of this catalog.
2. * = These parts are required when replacing shaft seal.

647

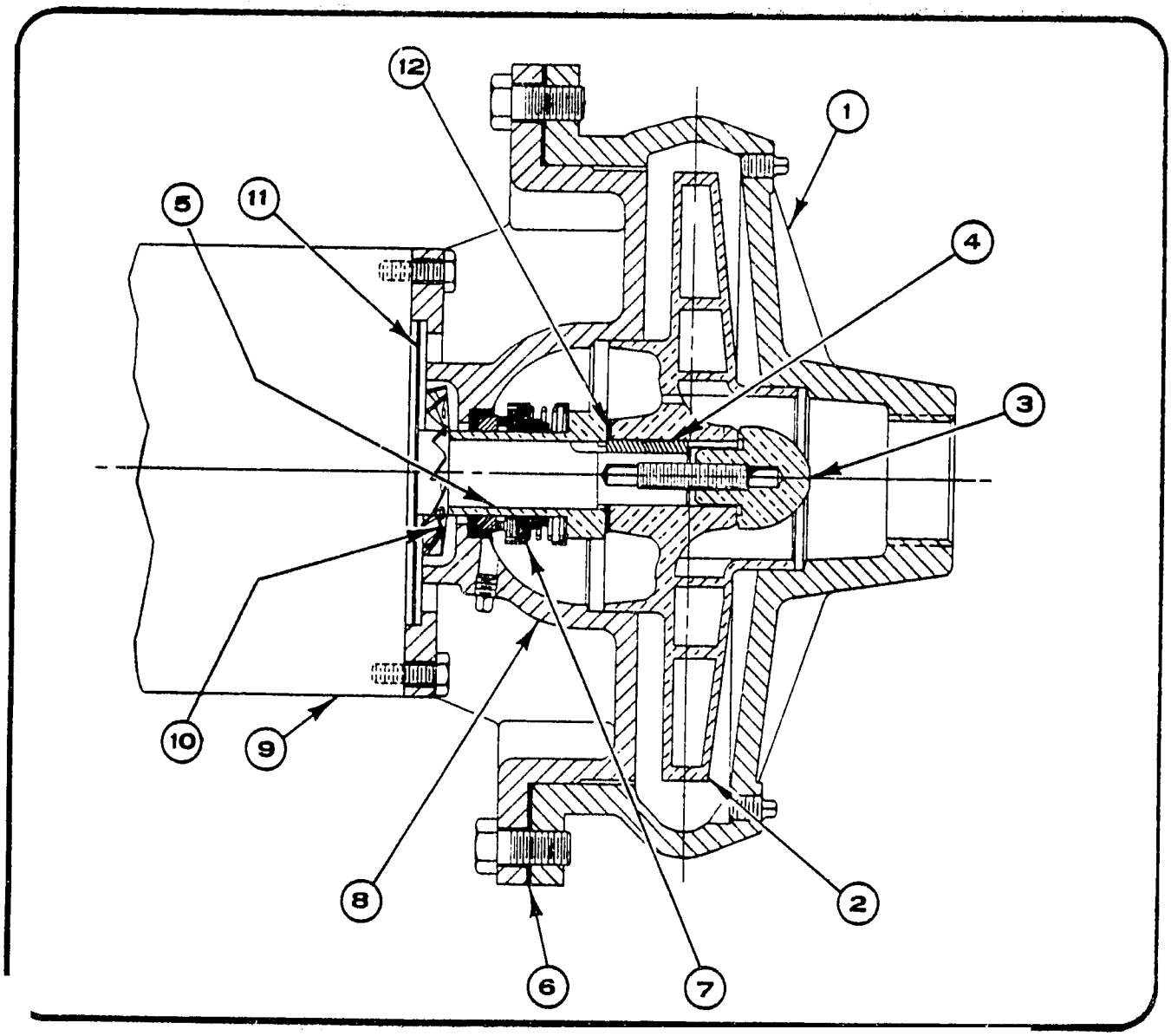

A9 PUMP AND PARTS LIST SERIES A – 3 HP

PART NUMBER AND DESCRIPTION	3 HP 1" 3ϕ A9D2A	3 HP 1" 3ϕ A9C2A	3 HP 1¼" 3ϕ A9D1A	3 HP 1¼" 3ϕ A9D2A	3 HP 2" 3ϕ A9D1A	3 HP 2½" 3ϕ A9D1A
1 CASE (CAST IRON) CASE (BRONZE)	F541 D2-76	F541 D2-76	F540 D2-74	F540 D2-74	F544 D2-80	F545 D2-79
2 IMPELLER (BRONZE)	C2-3212X 5¼"	C2-3211X 6 1/16"	C2-3213X 8¼"	C2-3213X 4 7/16"	C2-3214X 7 1/16"	C2-3215X 6¾"
3 STUD & NUT ASSEMBLY	C10035 A2-3898	C10035 A2-3898	C10035 A2-3898	C10035 A2-3898	C10035 A2-3898	C10035 A2-3898
4 KEY	C7763	C7763	C7763	C7763	C7763	C7763
5 SLEEVE *	A2-3905	A2-3905	A2-3905	A2-3905	A2-3905	A2-3905
6 GASKET *	D5450	D5450	D5450	D5450	D5450	D5450
7 SHAFT SEAL *	3179	3179	3179	3179	3179	3179
8 HEAD (CAST IRON) HEAD (BRONZE)	D2-1478 D2-1480	D2-1478 D2-1480	D2-1478 D2-1480	D2-1478 D2-1480	D2-1478 D2-1480	D2-1478 D2-1480
9 MOTOR	Contact Dunham-Bush, Inc., Marshalltown, Iowa					
10 SLINGER	C10038	C10038	C10038	C10038	C10038	C10038
11 SHIELD	C8958	C8958	C8958	C8958	C8958	C8958
12 GASKET *	A2-3020	A2-3020	A2-3020	A2-3020	A2-3020	A2-3020

NOTES: 1. NON-STANDARD pump parts are not shown. When ordering repair parts, refer to page 10 of this catalog.
2. * = These parts are required when replacing shaft seal.

692

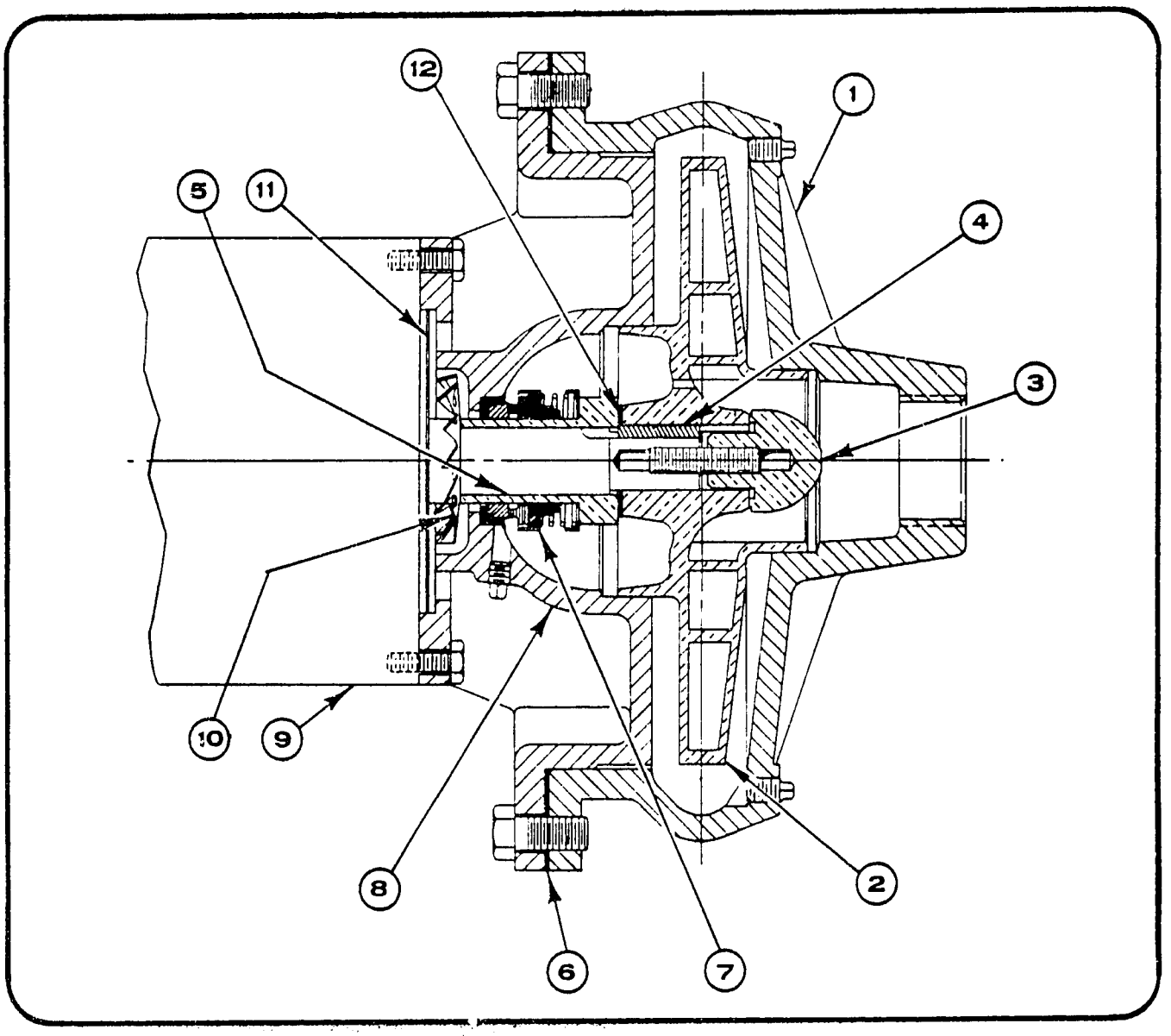

A9 PUMP AND PARTS LIST SERIES A – 5 HP

PART NUMBER AND DESCRIPTION	5 HP 1" 3ϕ A9C2A	5 HP 1" 3ϕ A9D2A	5 HP 1¼" 3ϕ A9D2A	5 HP 2" 3ϕ A9D1A	5 HP 2" 3ϕ A9D2A	5 HP 2½" 3ϕ A9D1A	5 HP 2½" 3ϕ A9D2A
1 CASE (CAST IRON) CASE (BRONZE)	F541 D2-76	F541 D2-76	F540 D2-74	F544 D2-80	F544 D2-80	F545 D2-79	F545 D2-79
2 IMPELLER (BRONZE)	C2-3211X $6^{9}/_{16}$"	C2-3212X $5^{7}/_{8}$"	C2-3213X $5^{15}/_{32}$"	C2-3214X $8^{7}/_{16}$"	C2-3214X $4^{15}/_{16}$"	C2-3215X $7^{15}/_{16}$"	C2-3215X $4^{3}/_{4}$"
3 STUD & NUT ASSEMBLY	C10035 A2-3898	C10035 A2-3898	C10035 A2-3898	C10035 A2-3899	C10035 A2-3899	C10035 A2-3899	C10035 A2-3899
4 KEY	C7763	C7763	C7763	C7763	C7763	C7763	C7763
5 SLEEVE *	A2-3905	A2-3905	A2-3905	A2-3905	A2-3905	A2-3905	A2-3905
6 GASKET *	D5450	D5450	D5450	D5450	D5450	D5450	D5450
7 SHAFT SEAL*	3179	3179	3179	3179	3179	3179	3179
8 HEAD (CAST IRON) HEAD (BRONZE)	D2-1478 D2-1480	D2-1478 D2-1480	D2-1478 D2-1480	D2-1478 D2-1480	D2-1478 D2-1480	D2-1478 D2-1480	D2-1478 D2-1480
9 MOTOR	Contact Dunham-Bush, Inc., Marshalltown, Iowa						
10 SLINGER	C10038	C10038	C10038	C10038	C10038	C10038	C10038
11 SHIELD	C8958	C8958	C8958	C8958	C8958	C8958	C8958
12 GASKET *	A2-3020	A2-3020	A2-3020	A2-3020	A2-3020	A2-3020	A2-3020

NOTES: 1. NON-STANDARD pump parts are not shown. When ordering repair parts, refer to page 10 of this catalog.
2. * = These parts are required when replacing shaft seal.

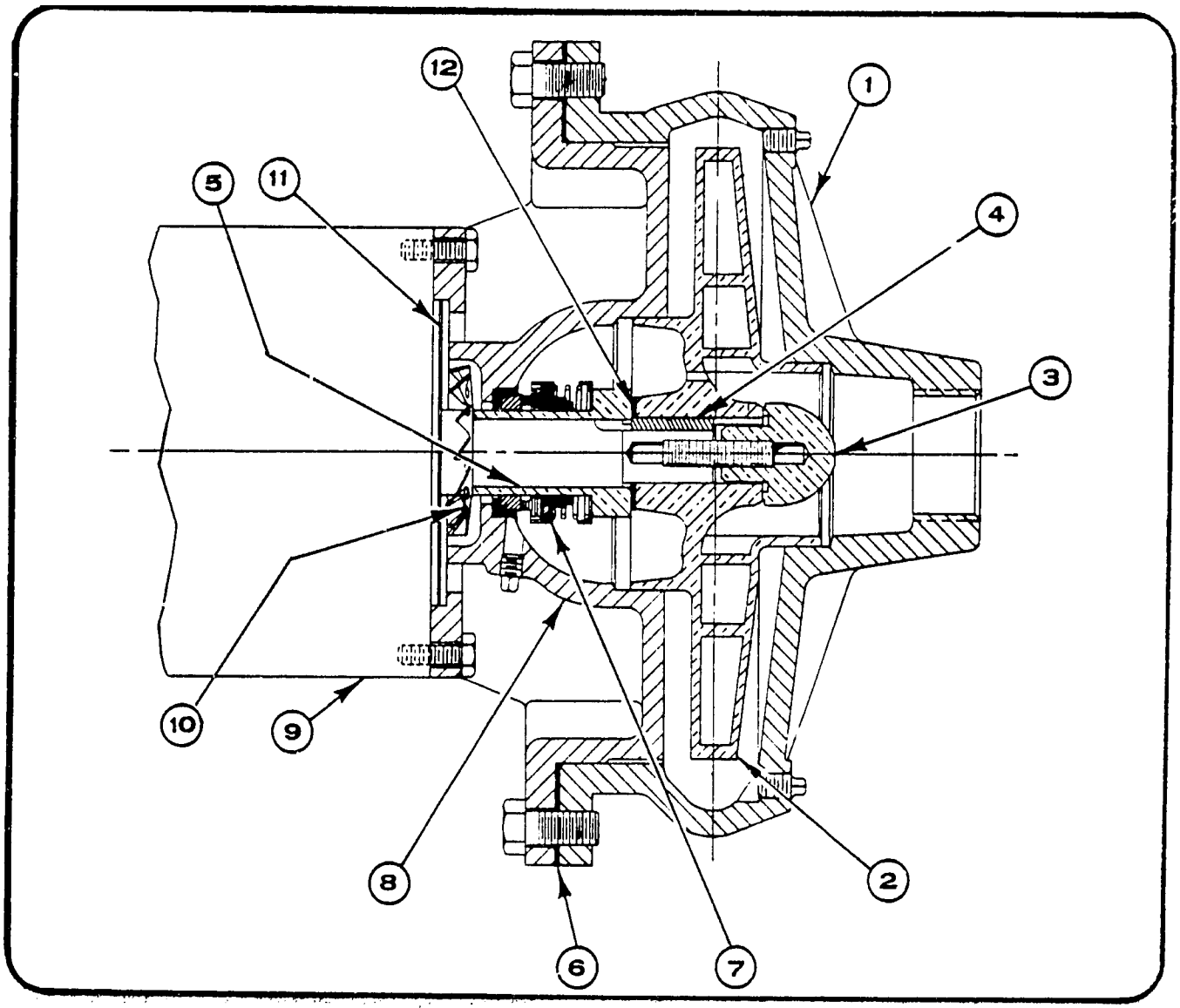

A9 PUMP AND PARTS LIST
SERIES A - 7½ HP

PART NUMBER AND DESCRIPTION	7½ HP 1¼" 3ϕ A9D2A	7½ HP 2" 3ϕ A9D2A	7½ HP 2½" 3ϕ A9D1A	7½ HP 2½" 3ϕ A9D1A
1 CASE (CAST IRON) CASE (BRONZE)	F540 D2-74	F544 D2-80	F545 D2-79	F545 D2-79
2 IMPELLER (BRONZE)	C2-3213X 5 15/16"	C2-3214X 5 9/16"	C2-3215X 9"	C2-3215X 5 5/16"
3 STUD & NUT ASSEMBLY	C10035 A2-3899	C10035 A2-3899	C10035 A2-3899	C10035 A2-3899
4 KEY	C7763	C7763	C7763	C7763
5 SLEEVE *	A2-3905	A2-3905	A2-3905	A2-3905
6 GASKET *	D5450	D5450	D5450	D5450
7 SHAFT SEAL*	3179	3179	3179	3179
8 HEAD (CAST IRON) HEAD (BRONZE)	D2-1478 D2-1480	D2-1478 D2-1480	D2-1481 D2-1483	D2-1478 D2-1480
9 MOTOR	Contact Dunham-Bush, Inc., Marshalitown, Iowa			
10 SLINGER	C1038	C1038	C1038	C1038
11 SHIELD	C8958	C8958	D5478	C8958
12 GASKET *	A2-3020	A2-3020	A2-3020	A2-3020

NOTES:
1. NON-STANDARD pump parts are not shown. When ordering repair parts, refer to page 10 of this catalog.
2. * = These parts are required when replacing shaft seal.

100

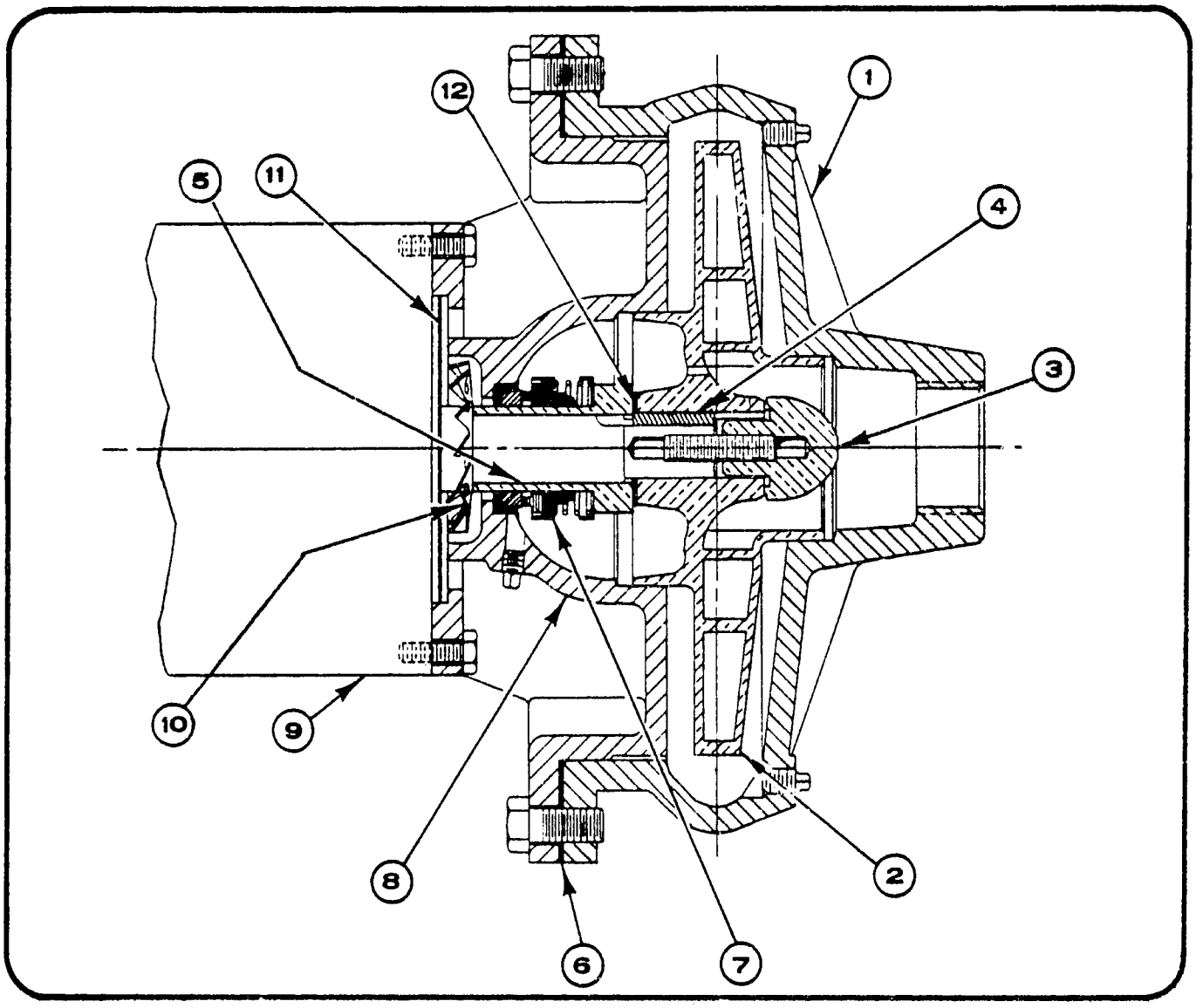

A9 PUMP AND PARTS LIST
SERIES A – 10 HP AND 15 HP

PART NUMBER AND DESCRIPTION	10 HP 1¼" 3ϕ A9D2A	10 HP 2" 3ϕ A9D2A	10 HP 2½" 3ϕ A9D2A	15 HP 2" 3ϕ A9D2A
1 CASE (CAST IRON) CASE (BRONZE)	F540 D2-74	F544 D2-80	F545 D2-79	F544 D2-80
2 IMPELLER (BRONZE)	C2-3213X $6^{3}/_{8}$"	C2-3214X $5^{29}/_{32}$"	C2-3215X $5^{21}/_{32}$"	C2-3214X $6^{5}/_{16}$"
3 STUD & NUT ASSEMBLY	C10035 A2-3899	C10035 A2-3899	C10035 A2-3899	C10035 A2-3899
4 KEY	C7763	C7763	C7763	C7763
5 SLEEVE *	A2-3905	A2-3905	A2-3905	A2-3905
6 GASKET *	D5450	D5450	D5450	D5450
7 SHAFT SEAL *	3179	3179	3179	3179
8 HEAD (CAST IRON) HEAD (BRONZE)	D2-1481 D2-1483	D2-1481 D2-1483	D2-1481 D2-1483	D2-1481 D2-1483
9 MOTOR	Contact Dunham-Bush, Inc., Marshalltown, Iowa			
10 SLINGER	C1038	C1038	C1038	C1038
11 SHIELD	D5478	D5478	D5478	D5478
12 GASKET *	A2-3020	A2-3020	A2-3020	A2-3020

NOTES: 1. NON-STANDARD pump parts are not shown. When ordering repair parts, refer to page 10 of this catalog.
2. * = These parts are required when replacing shaft seal.

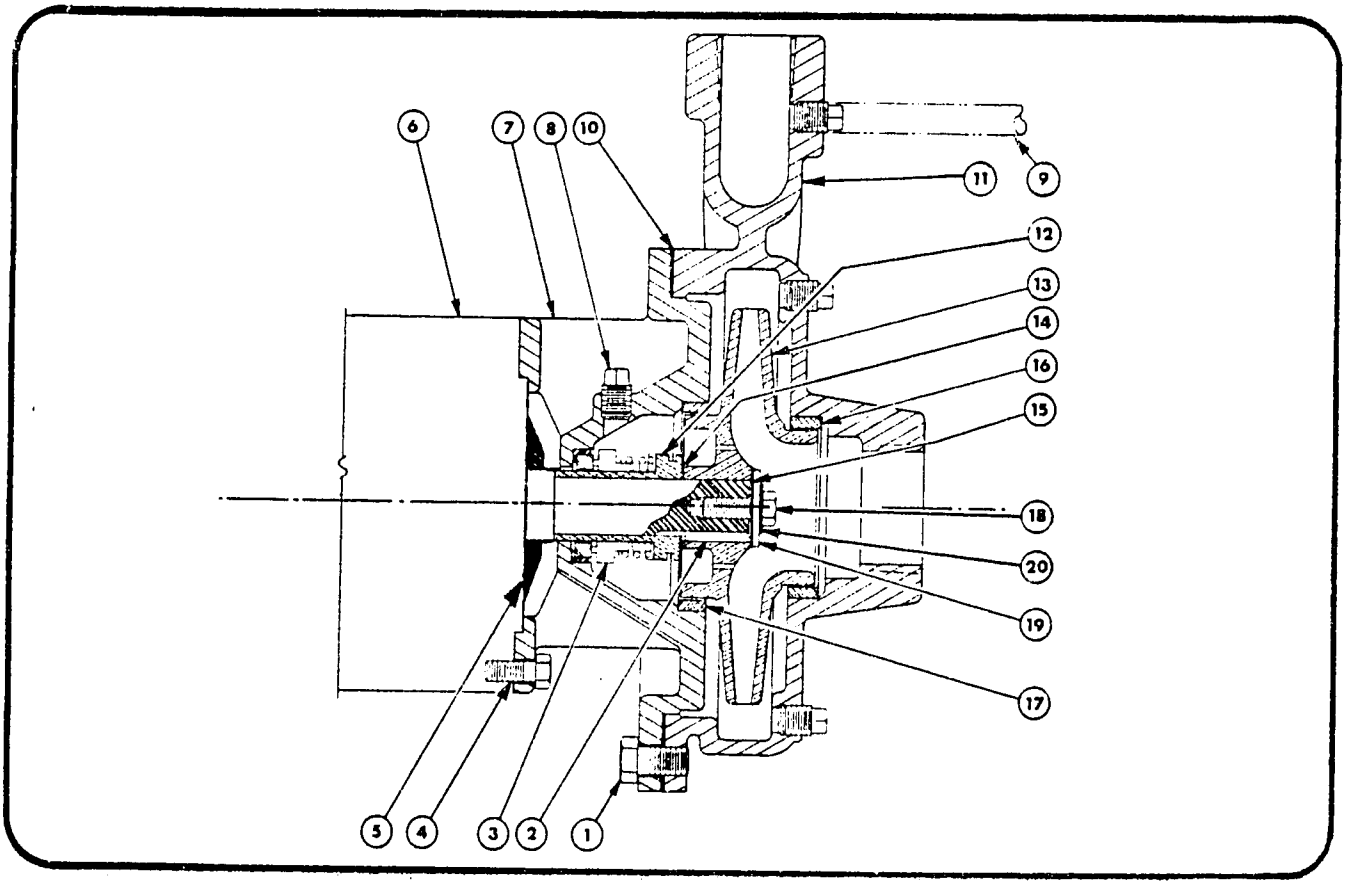

A7 PUMP AND PARTS LIST - ¾", 1¼" AND 1½" DIA. DISCHARGE

PART NUMBER & DESCRIPTION		¾" A7B	1¼" A7B	1¼" A7C	1½" A7B	1½" A7C
1.	Screw – Cap	P - 150				
2.	Key – Impeller	Supplied with Motor				
3.	Seal – Mechanical *	3179	3179	3179	3179	3179
	Seal – 250# Optional	Contact Dunham-Bush, Inc., Marshalltown, Iowa				
4.	Screw – Cap	P-142	P-142	P-150	P-142	P-150
5.	Slinger	Supplied with Motor				
6.	Motor	Contact Dunham-Bush, Inc., Marshalltown, Iowa				
7.	Head, C.I.	C2-2336	C2-2336	C2-2337	C2-2336	C2-2337
	Head, Bronze	C2-2660	C2-2660	C2-2661	C2-2660	C2-2661
	Head, C.I. w/wear Rings	C2-2345	C2-2345	C2-2346	C2-2345	C2-2346
8.	Fitting – Compression Straight	P - 194 (Optional)				
	Fitting – Elbow, Not shown	P - 195 (Optional)				
	Plug – Pipe	(5) P - 196				
9.	Tube	Copper 1/8" OD (Optional)				
10.	Gasket – Case *	C2-2343				
11.	Case, C.I.	C2-2390	C2-2335		C2-2377	
	Case, (Bronze)	C2-2665	C2-2666		C2-2667	
	Case, C.I. w/wear Rings	C2-2389	C2-2347		C2-2376	
	Case, 250# C.I.	Not Available				
	Case, 250# Bronze	Not Available				
	Case, 250# C.I. w/wear Rings	Not Available				
12.	Sleeve *	A2-3018	A2-3018	A2-3018	A2-3018	A2-3018
	Seal – 250# Optional	Contact Dunham-Bush, Inc., Marshalltown, Iowa				
13.	Impeller	C2-2378	C2-2340	C2-2340	C2-2380	C2-2380
14.	Gasket (Impeller – Sleeve) *	A2-3020	A2-3020	A2-3020	A2-3020	A2-3020
15.	Gasket (Impeller – Head) *	A2-3022-1				
16.	Ring – Case Wear Ring	A2-3026	A2-3015		A2-3027	
17.	Ring – Head Wear Ring	A2-3016				
18.	Screw – Impeller	3312	3312	3312	3312	3312
19.	Washer – Impeller	A2-3021-1				
20.	Washer – Sealing	3313	3313	3313	3313	3313

NOTES: 1. NON-STANDARD pump parts are not shown. When ordering repair parts, refer to page 10 of this catalog.
2. * = These parts are required when replacing shaft seal.

702

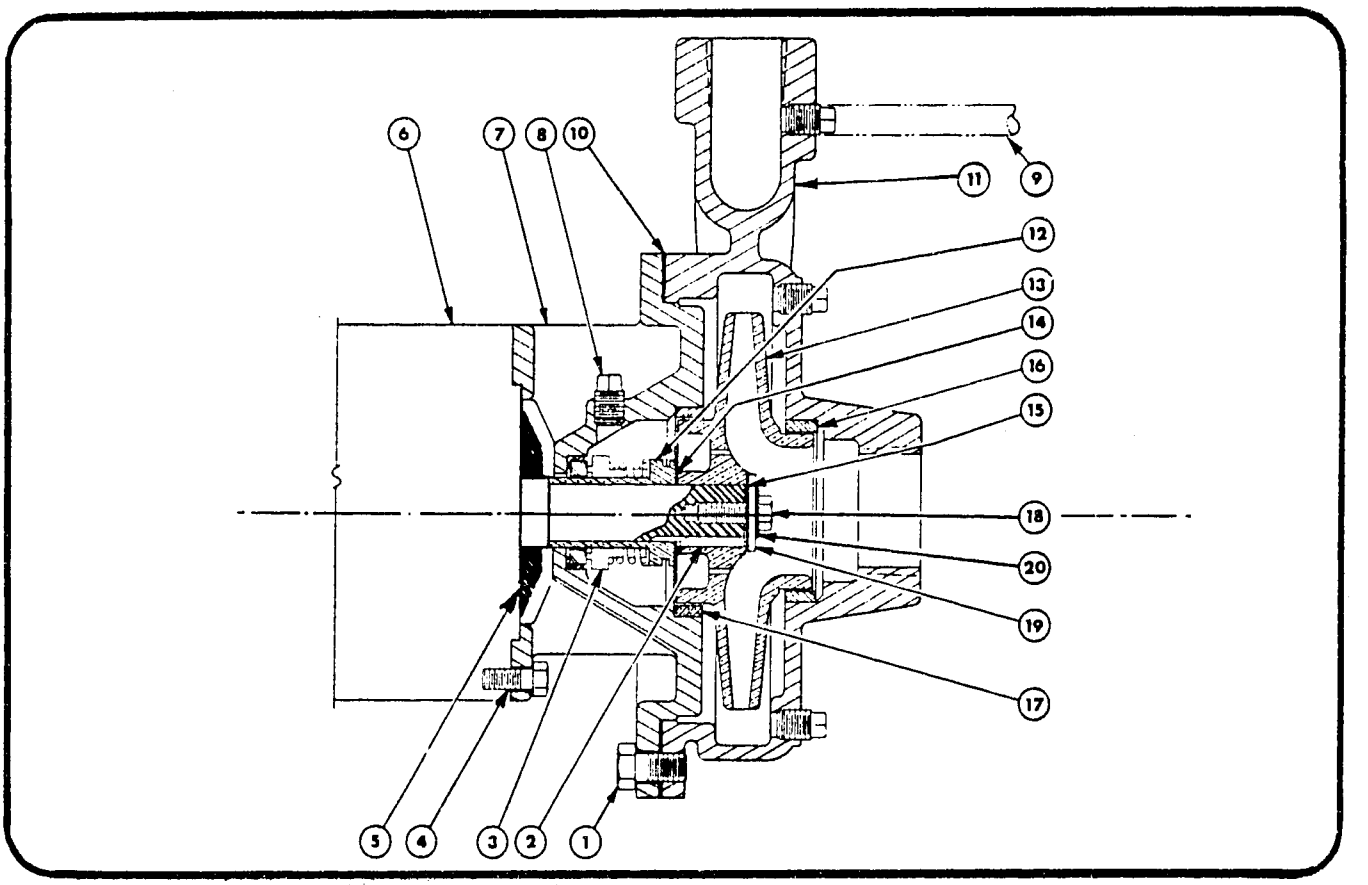

A7 PUMP AND PARTS LIST – 2" AND 2½" DIA. DISCHARGE

PART NUMBER & DESCRIPTION		2" A7D	2" A7E	2" A7F	2½" A7D	2½" A7E	2½" A7E H.C.	2½" A7F
1.	Screw – Cap	P - 150						
2.	Key – Impeller	Supplied with Motor						
3.	Seal – Mechanical *	3179	3179	3291	3179	3179	3179	3291
	Seal – 250# Optional	Contact Dunham-Bush, Inc., Marshalltown, Iowa						
4.	Screw – Cap	P - 142	P - 150	P - 150	P - 142	P - 150	P - 150	P - 150
5.	Slinger	Supplied with Motor						
6.	Motor	Contact Dunham-Bush, Inc., Marshalltown, Iowa						
7.	Head, C.I.	C2-2384	C2-2386	C2-2388	C2-2384	C2-2386	C2-2386	C2-2388
	Head, Bronze	C2-2662	C2-2663	C2-2664	C2-2662	C2-2663	C2-2663	C2-2664
	Head, C.I. w/wear rings	C2-2383	C2-2385	C2-2387	C2-2383	C2-2385	C2-2385	C2-2387
8.	Fitting – Compression Straight	P - 194 (Optional)						
	Fitting – Elbow, Not shown	P - 195 (Optional)						
	Plug – Pipe	(5) P - 196						
9.	Tube	Copper 1/8" OD (Optional)						
10.	Gasket – Case *	C2-2343						
11.	Case, C.I.	D2-1274			D2-1276			
	Case, (Bronze)	D2-1352			D2-1355			
	Case, C.I. w/wear rings	D2-1273			D2-1275			
	Case, 250# C.I.	Not Available						
	Case, 250# Bronze	Not Available						
	Case, 250# C.I. w/wear rings	Not Available						
12.	Sleeve *	A2-3018	A2-3018	A2-3025	A2-3018	A2-3018	A2-3018	A2-3025
	Seal – 250# Optional	Contact Dunham-Bush, Inc., Marshalltown, Iowa						
13.	Impeller	C2-2381	C2-2381	C2-2382	C2-2381	C2-2381	C2-2392	C2-2382
14.	Gasket (Impeller – Sleeve) *	A2-3020	A2-3020	A2-3029	A2-3020	A2-3020	A2-3020	A2-3029
15.	Gasket (Impeller – Head) *	A2-3021-1		A2-3022-2	A2-3022-1			A2-3022-2
16.	Ring – Case Wear Ring	A2-3028						
17.	Ring – Head Wear Ring	A2-3016						
18.	Screw – Impeller	3312	3312	3292	3312	3312	3312	3292
19.	Washer – Impeller	A2-3021-1		A2-3021-2	A2-3021-1			A2-3021-2
20.	Washer – Sealing	3313	3313	3293	3313	3313	3313	3293

NOTES: 1. NON-STANDARD pump parts are not shown. When ordering repair parts, refer to page 10 of this catalog.
2. * = These parts are required when replacing shaft seal.

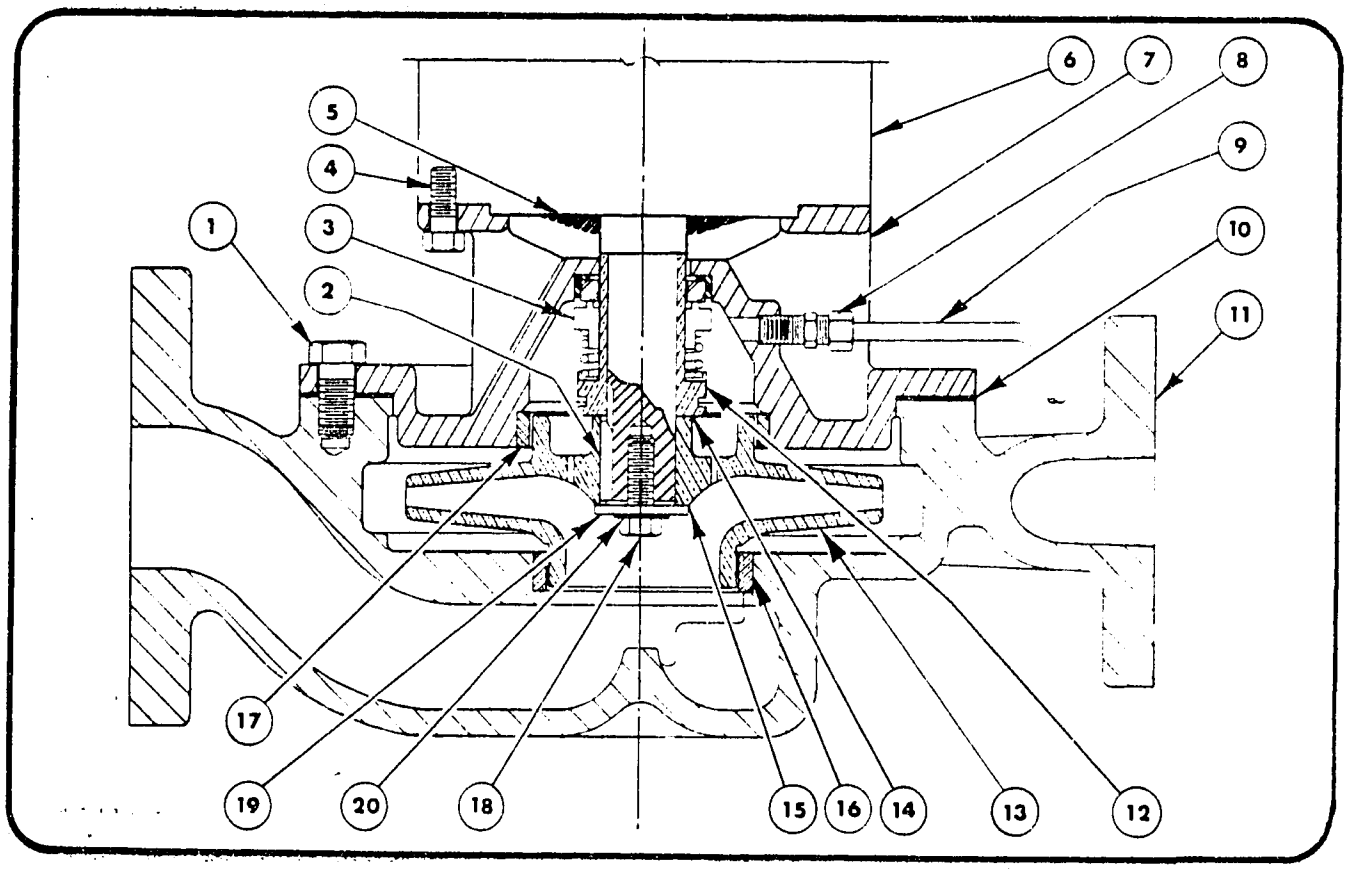

PM7 PUMP AND PARTS LIST – 1", 1¼" AND 1½" DIA. DISCHARGE

PART NUMBER & DESCRIPTION		1" PM7B	1¼" PM7B	1¼" PM7C	1½" PM7B	1½" PM7C
1.	Screw - Cap	P - 150				
2.	Key - Impeller	Supplied with Motor				
3.	Seal - Mechanical *	3179	3179	3179	3179	3179
	Seal 250# Optional	Contact Dunham-Bush, Inc. – Marshalltown, Iowa				
4.	Screw - Cap	P - 142	P - 142	P - 150	P - 142	P - 150
5.	Slinger	Supplied with Motor				
6.	Motor	Contact Dunham-Bush, Inc. – Marshalltown, Iowa				
7.	Head, C.I.	C2-2336	C2-2336	C2-2337	C2-2336	C2-2337
	Head, (Bronze)	C2-2660	C2-2660	C2-2661	C2-2660	C2-2661
	Head, C.I. w/wear rings	C2-2345	C2-2345	C2-2346	C2-2345	C2-2346
8.	Fitting - Compression Straight	P-194				
	Fitting - Elbow – Not shown	P-195				
	Plug - Pipe	(1) P-196				
9.	Tube	Copper 1/8" OD				
10.	Gasket - Case *	C2-2343				
11.	Case, C.I.	D2-1268	D2-1256	D2-1256	D2-1266	D2-1266
	Case, (Bronze)	D2-1346	D2-1348	D2-1348	D2-1350	D2-1350
	Case, C.I. w/wear rings	D2-1267	D2-1255	D2-1255	D2-1265	D2-1265
	Case, 250# C.I.	D2-1299	D2-1301	D2-1301	D2-1303	D2-1303
	Case, 250# Bronze	D2-1347	D2-1349	D2-1349	D2-1351	D2-1351
	Case, 250# C.I. w/wear rings	D2-1300	D2-1302	D2-1302	D2-1304	D2-1304
12.	Sleeve *	A2-3018	A2-3018	A2-3018	A2-3018	A2-3018
	Seal 250# Optional	Contact Dunham-Bush, Inc. – Marshalltown, Iowa				
13.	Impeller	C2-2379	C2-2340	C2-2340	C2-2380	C2-2380
14.	Gasket (Impeller - Sleeve) *	A2-3020	A2-3020	A2-3020	A2-3020	A2-3020
15.	Gasket (Impeller - Head) *	A2-3022-1				
16.	Ring - Case Wear Ring	A2-3026	A2-3015	A2-3015	A2-3027	A2-3027
17.	Ring - Head Wear Ring	A2-3016				
18.	Screw - Impeller	3312				
19.	Washer - Impeller	A2-3021-1				
20.	Washer - Sealing	3313				

NOTES:
1. NON-STANDARD pump parts are not shown. When ordering repair parts, refer to page 10 of this catalog.
2. * = These parts are required when replacing shaft seal.

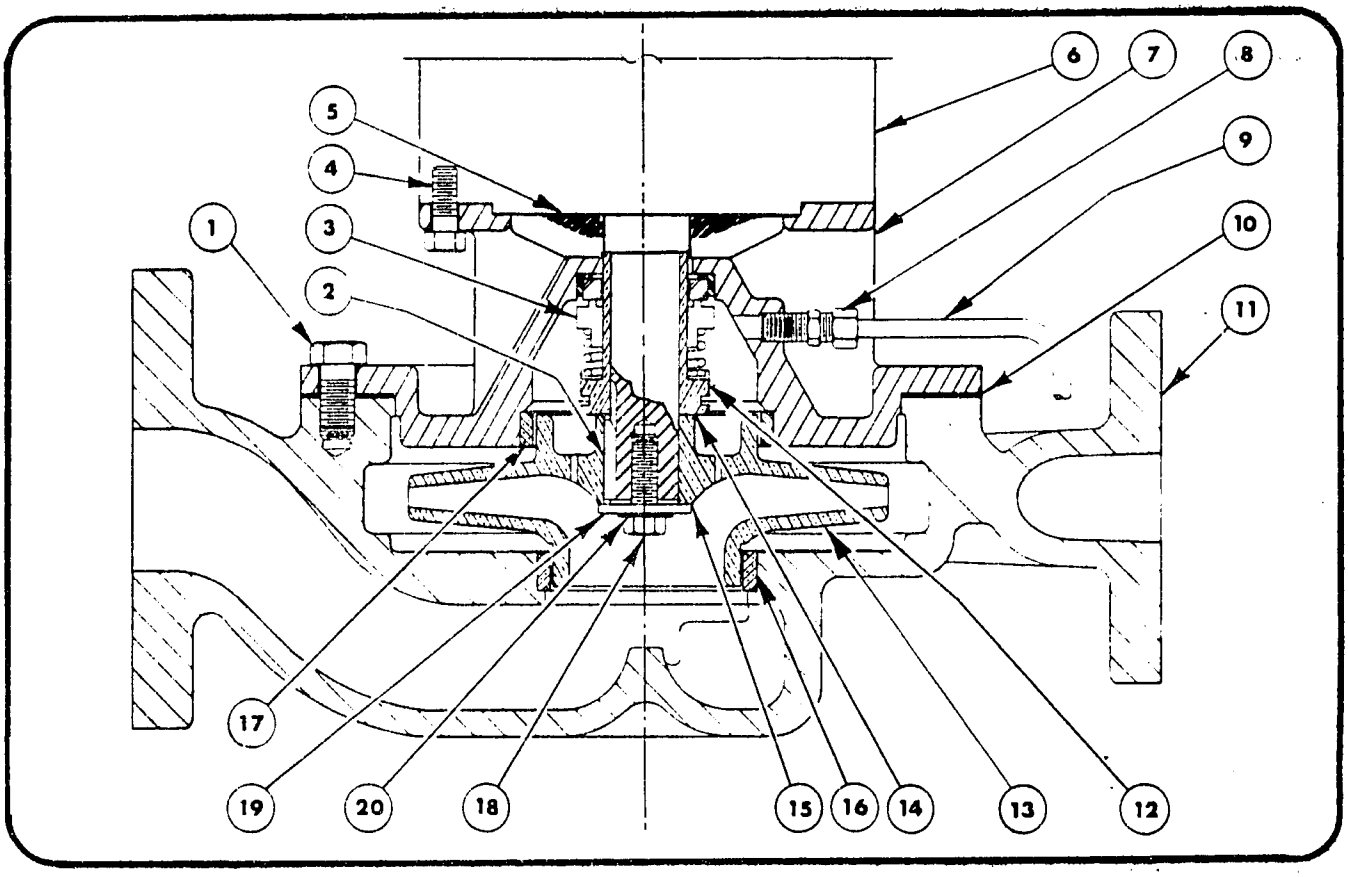

PM7 PUMP AND PARTS LIST – 2" AND 2½" DIA. DISCHARGE

PART NUMBER & DESCRIPTION		2" PM7D	2" PM7E	2" PM7F	2½" PM7D	2½" PM7E	2½" PM7E H.C.	2½" PM7F
1.	Screw - Cap	P - 150						
2.	Key - Impeller	Supplied with Motor						
3.	Seal - Mechanical *	3179	3179	3291	3179	3179	3179	3291
	Seal 250# Optional	Contact Dunham-Bush, Inc. – Marshalltown, Iowa						
4.	Screw - Cap	P - 142	P - 150	P - 150	P - 142	P -150	P - 150	P -150
5.	Slinger	Supplied with Motor						
6.	Motor	Contact Dunham-Bush, Inc. – Marshalltown, Iowa						
7.	Head, C.I.	C2-2384	C2-2386	C2-2388	C2-2384	C2-2386	C2-2386	C2-2388
	Head, (Bronze)	C2-2662	C2-2663	C2-2664	C2-2662	C2-2663	C2-2663	C2-2664
	Head, C.I. w/wear rings	C2-2383	C2-2385	C2-2387	C2-2383	C2-2385	C2-2385	C2-2387
8.	Fitting - Compression Straight	P-194						
	Fitting - Elbow – Not Shown	P-195						
	Plug - Pipe	(1) P-196						
9.	Tube	Copper 1/8" OD						
10.	Gasket - Case *	C2-2343						
11.	Case, C.I.	D2-1270			D2-1272			
	Case, (Bronze)	D2-1269			D2-1356			
	Case, C.I. w/wear rings	D2-1353			D2-1271			
	Case, 250# C.I.	D2-1305			D2-1307			
	Case, 250# Bronze	D2-1354			D2-1357			
	Case, 250# C.I. w/wear rings	D2-1306			D2-1308			
12.	Sleeve *	A2-3018	A2-3018	A2-3025	A2-3018	A2-3018	A2-3018	A2-3025
	Seal 250# Optional	Contact Dunham-Bush, Inc. – Marshalltown, Iowa						
13.	Impeller	C2-2381	C2-2381	C2-2382	C2-2381	C2-2381	C2-2392	C2-2382
14.	Gasket (Impeller - Sleeve) *	A2-3020	A2-3020	A2-3029	A2-3020	A2-3020	A2-3020	A2-3029
15.	Gasket (Impeller - Head)	A2-3022-1		A2-3022-2	A2-3022-1			A2-3022-2
16.	Ring - Case Wear Ring	A2-3028						
17.	Ring - Head Wear Ring	A2-3016						
18.	Screw - Impeller	3312		3292	3312			3292
19.	Washer - Impeller	A2-3021-1		A2-3021-2	A2-3021-1			A2-3021-2
20.	Washer - Sealing	3313		3293	3313			3293

NOTES: 1. NON-STANDARD pump parts are not shown. When ordering repair parts, refer to page 10 of this catalog.
2. * = These parts are required when replacing shaft seal.

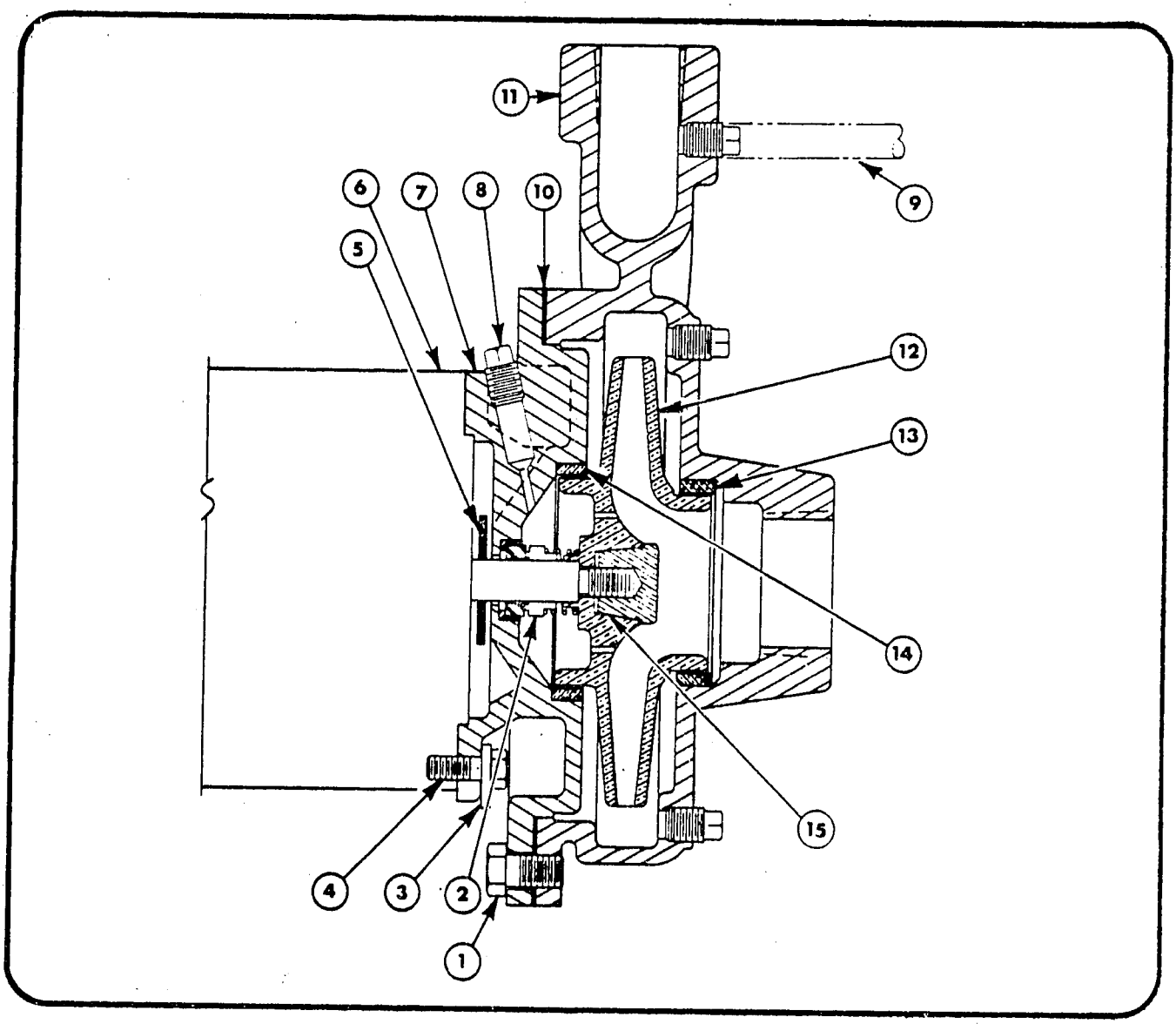

A7A PUMP AND PARTS LIST– ¾", 1¼" AND 1½" DIA. DISCHARGE

	PART NUMBER & DESCRIPTION	¾" A7A	1¼" A7A	1½" A7A
1.	Screw–Cap	P - 150	P - 150	P - 150
2.	Seal–Mechanical *	472	472	472
3.	Retainer–Head	A2-3023	A2-3023	A2-3023
4.	Screw–Cap	P - 142	P - 142	P - 142
5.	Slinger	C8854	C8854	C8854
6.	Motor	Contact Dunham-Bush, Inc. Marshalltown, Iowa		
7.	Head, C.I.	C2-2342	C2-2342	C2-2342
	Head, Bronze	C2-2659	C2-2659	C2-2659
	Head, C.I. w/wear rings	C2-2344	C2-2344	C2-2344
8.	Fitting – Compression Straight	P - 194 (Optional)		
	Fitting – Elbow (Not Shown)	P - 195 (Optional)		
	Plug–Pipe	(5) P - 196		
9.	Tube	Copper 1/8" OD (Optional)		
10.	Gasket–Case *	C2-2343	C2-2343	C2-2343
11.	Case, C.I.	C2-2390	C2-2335	C2-2377
	Case, Bronze	C2-2665	C2-2666	C2-2667
	Case, C.I. w/wear rings	C2-2389	C2-2347	C2-2376
12.	Impeller	C2-2378	C2-2339	C2-2498
13.	Ring – Case Wear Ring	A2-3026	A2-3015	A2-3027
14.	Ring – Head Wear Ring	A2-3016	A2-3016	A2-3016
15.	Screw–Impeller	A2-3691	A2-3691	A2-3691

NOTES: 1. NON-STANDARD pump parts are not shown. When ordering repair parts, refer to page 10 of this catalog.
2. * = These parts are required when replacing shaft seal.

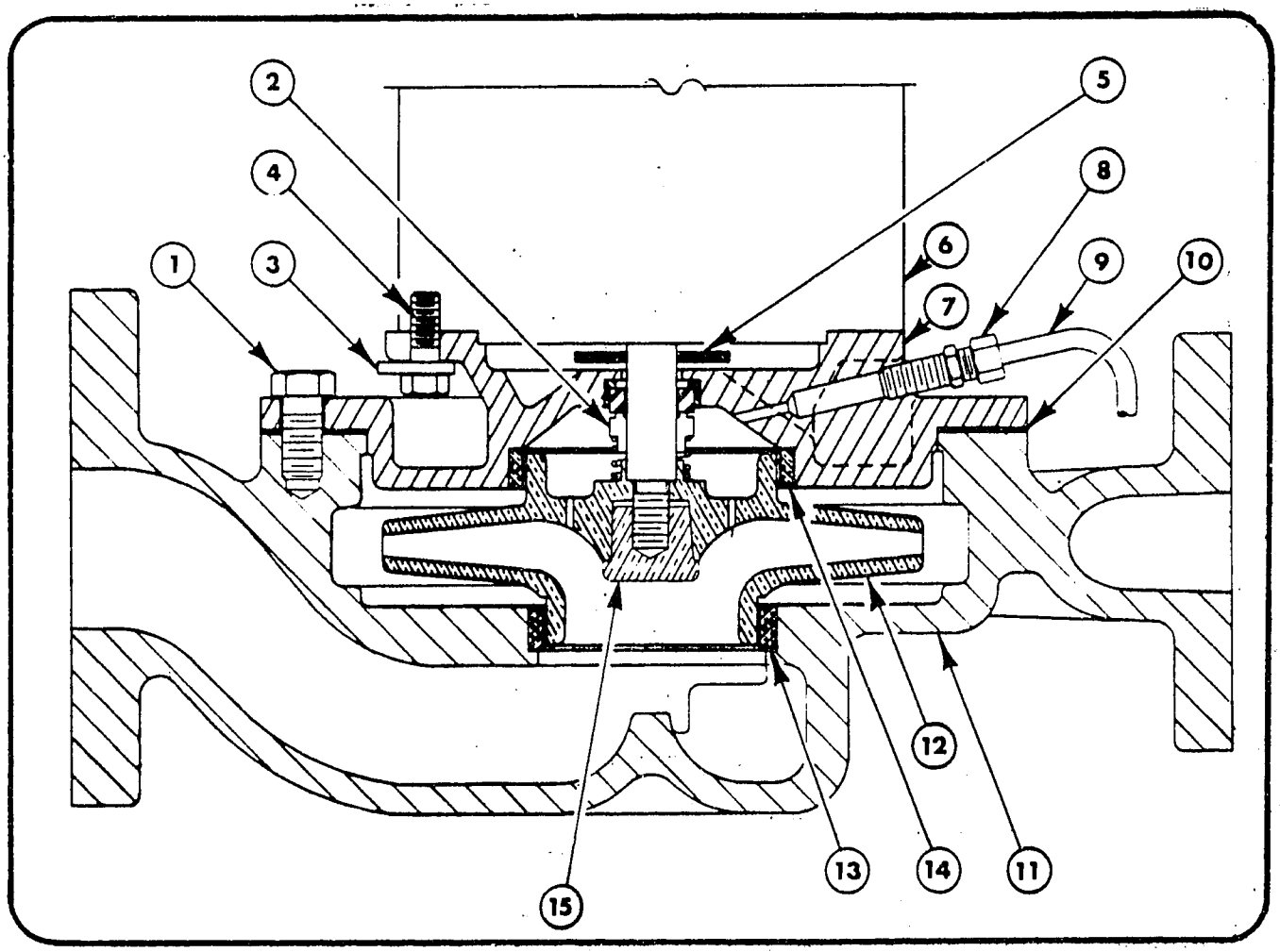

PM7A PUMP AND PARTS LIST
1", 1¼" AND 1½" DIA. DISCHARGE

PART NUMBER & DESCRIPTION		1" PM7A	1¼" PM7A	1½" PM7A
1.	Screw—Cap	P - 150	P - 150	P - 150
2.	Seal—Mechanical *	472	472	472
3.	Retainer—Head	A2-3023	A2-3023	A2-3023
4.	Screw—Cap	P - 142	P - 142	P - 142
5.	Slinger	C8854	C8854	C8854
6.	Motor	Contact Dunham-Bush, Inc., Marshalltown, Iowa		
7.	Head, C.I.	C2-2342	C2-2342	C2-2342
	Head, Bronze	C2-2659	C2-2659	C2-2659
	Head, C.I. w/wear rings	C2-2344	C2-2344	C2-2344
8.	Fitting—Compression Straight	P - 194		
	Fitting—Elbow (Not Shown)	P - 195		
	Plug—Pipe	(1) P - 196		
9.	Tube	Copper 1/8" OD		
10.	Gasket—Case *	C2-2343	C2-2343	C2-2343
11.	Case, C.I.	D2-1268	D2-1256	D2-1266
	Case, Bronze	D2-1346	D2-1348	D2-1350
	Case, C.I. w/wear rings	D2-1267	D2-1255	D2-1265
	Case, 250# C.I.	D2-1299	D2-1301	D2-1303
	Case, 250# Bronze	D2-1347	D2-1349	D2-1351
	Case, 250# C.I. w/wear rings	D2-1300	D2-1302	D2-1304
12.	Impeller	C2-2378	C2-2339	C2-2498
13.	Ring—Case Wear Ring	A2-3026	A2-3015	A2-3027
14.	Ring—Head Wear Ring	A2-3016	A2-3016	A2-3016
15.	Nut—Impeller	A2-3691	A2-3691	A2-3691

NOTES: 1. NON-STANDARD pump parts are not shown. When ordering repair parts, refer to page 10 of this catalog.
2. * = These parts are required when replacing shaft seal.

DUNHAM-BUSH

AIR CONDITIONING, REFRIGERATION, HEATING PRODUCTS AND ACCESSORIES

MAIN OFFICES

175 SOUTH STREET WEST HARTFORD, CONNECTICUT 06110

FACTORIES

WEST HARTFORD DIVISION
179 South Street
West Hartford, Connecticut
06110

HARRISONBURG DIVISION
101 Burgess Road
Harrisonburg, Virginia
22801

MARSHALLTOWN DIVISION
811 East Main Street
Marshalltown, Iowa
50158

RIVERSIDE DIVISION
1850 Massachusetts Ave.
Riverside, California
92507

SUBSIDIARIES

DUNHAM-BUSH of Canada Limited
140 Wendell Avenue
Weston, Ontario

DUNHAM-BUSH, LTD.
Fitzherbert Road, Farlington
Portsmouth, Hampshire, England

DUNHAM-BUSH INTERNATIONAL: 175 South Street, West Hartford, Connecticut 06110, U.S.A.
CABLE: DUNBUSH or TELEX: 994469

SALES OFFICES

ALABAMA
Birmingham
Mobile

ARIZONA
Phoenix

ARKANSAS
Little Rock

CALIFORNIA
Arcadia
Los Angeles
Sacramento
San Diego
San Francisco

COLORADO
Denver

CONNECTICUT
Hartford
Bloomfield

FLORIDA
Clearwater
Jacksonville
Miami
Orlando

GEORGIA
Atlanta

HAWAII
Honolulu

ILLINOIS
Chicago
Peoria
Rockford

INDIANA
Indianapolis
Michigan City

IOWA
Des Moines

KANSAS
Lenexa

KENTUCKY
Louisville

LOUISIANA
New Orleans
Shreveport

MAINE
Lewiston

MARYLAND
Baltimore
Silver Spring

MASSACHUSETTS
Boston
Springfield

MICHIGAN
Detroit
Grand Rapids
Kalamazoo

MINNESOTA
Minneapolis

MISSISSIPPI
Jackson

MISSOURI
Kansas City
St. Louis

MONTANA
Billings
Great Falls

NEBRASKA
Omaha

NEW JERSEY
Hazlet
Little Falls
Union

NEW MEXICO
Albuquerque

NEW YORK
Albany
Buffalo
New York City
Rochester
Syracuse

NORTH CAROLINA
Charlotte
Greensboro

OHIO
Akron
Cincinnati
Cleveland
Columbus
Dayton
Delaware
Toledo

OKLAHOMA
Oklahoma City
Tulsa

OREGON
Portland

PENNSYLVANIA
Harrisburg
Philadelphia
Pittsburgh
Pittston

PUERTO RICO
Caparra Heights

RHODE ISLAND
Providence

TENNESSEE
Memphis
Knoxville
Nashville

TEXAS
Dallas
El Paso
Houston
Lubbock
San Antonio

UTAH
Salt Lake City

VIRGINIA
Alexandria
Harrisonburg
Richmond
Virginia Beach

WASHINGTON
Seattle
Spokane

WEST VIRGINIA
Barboursville

WISCONSIN
Milwaukee

REPRESENTED BY:

DUNHAM-BUSH, INC. • Marshalltown, Iowa 50158, U.S.A.

3440B-5M-1079B-281B

one of The Signal Companies

FINAL REPORT

PROCUREMENT AND TECHNICAL REVIEW FOR USAID CAIRO, EGYPT

Volume II

prepared for

AGENCY FOR INTERNATIONAL DEVELOPMENT

REQUIREMENTS CONTRACT NO. AID/OTR-C-1629

May 1981

WILLIAMS BROTHERS ENGINEERING COMPANY

A Resource Sciences Company

RESOURCE SCIENCES CENTER • TULSA, OKLAHOMA 74177

709

CONTRACT NO. AID/OTR-C-1629
PIO/T NO. 263-026-3-90315
WBEC PROJECT NO. 4631
PROCUREMENT AND TECHNICAL REVIEW
FOR USAID CAIRO, EGYPT

This report section pertains to the following project:

Importer:	Mohamed Talaat Nohman
Order No:	EA 10080
L/C Bank:	Bank of America
U.S. Bank L/C No:	621125
L/C Amount:	$68,430.00
DIB L/C No.:	20101
SER/COM:	#5

EQUIPMENT IDENTIFICATION

The equipment and spare parts lists from the suppliers final invoice and the equipment list from the contractor's on-site inspection are itemized in tabular form.

Consistency of the two parts lists may be easily established. This form also indicates compliance with the proforma invoice, contract and bank appraisal report.

Equipment details, such as catalog and serial numbers are shown on the contractor's on-site Equipment Identification form following the Equipment and Spare Parts Lists.

7''

SPARE PARTS LIST

CONTRACTOR ON-SITE INSPECTION	DUNHAM-BUSH INVOICE #	COMMENTS
Importer indicated C.A.C. left 139 empty 30 lb. cylinders of Freon R-22 and 11 full 30 lb. cylinders of Freon R-22 after the system start-up. None of the cylinders empty or full were available for inspection by the contractor.	No spare parts or extra Freon listed.	No spare parts or extra Freon listed on Proforma. No spare parts or extra Freon listed in Contract. (Other than normal operating Freon charge.)

SER/COM # 5

DATE 2/21/81

IMPORTER: Mohamed Talaat

DIB L/C# 20101

LOCATION: Girga

U.S. L/C 621125

SERVICE: Ice Plant

AMOUNT USD $68,430.00

EQUIPMENT IDENTIFICATION

CHILLER	TYPE Pkg. Chiller w/Screw	MODEL PCX 120-05Q	SERIAL DPW1610F79X2834A	
	Compressor Motor	36518	I.D.# 1MA486802-62-0E	
	Condenser	X2834X08	Natl. Bd. 55019	
	Oil Sump	X2834X19	Natl. Bd. 55021	
	Evaporator	X2834X10	Natl. Bd. 55020	

STATUS: Non-operational

Client waiting for start-up completion by C.A.C. Corporation.

REMARKS:

SER/COM # 5

DATE _____

IMPORTER: _____ DIB L/C# _____

LOCATION: _____ U.S. L/C _____

SERVICE: _____ AMOUNT _____

EQUIPMENT IDENTIFICATION

PUMP # 1	TYPE Cond. Water Pump	MODEL A9D90S-1A	SERIAL 60938
	Motor	(FR.) 0334	P/N6-333002-02
PUMP # 2	Cond. Water Pump	A9D90S-1	60940
	Motor	(FR.) 0334	P/N6-333002-02
PUMP # 3	Brine Pump	A9D90S-1A	60936
	Motor	(FR.) 0334	P/N6-333002-02

STATUS: _____

REMARKS: Importer has 2 pumps more than the quantity shown on the Proforma and final invoices. The importer was using one pump to provide additional circulation in the Brine Sump and the other extra pump was not installed in the system.

DATE _____

IMPORTER: _____ DIB L/C# _____

LOCATION: _____ U.S. L/C _____

SERVICE: _____ AMOUNT _____

EQUIPMENT IDENTIFICATION

PUMP # 4	TYPE Brine Pump	MODEL A9D90S-1N	SERIAL 60935
	Motor	(FR.) S213 JM	P/N6-333002-02
PUMP # 5	Brine Circulation	A9D90S-1A	60937
	Motor	(FR.) S213 JM	P/N6-333002-02
PUMP # 6	Extra(not installed)	A9D90S-1A	60939
	Motor	(FR.) S213 JM	P/N6-333002-02

STATUS: _____

REMARKS: _____

SER/COM # 5

DATE _____

IMPORTER: _____ DIB L/C# _____

LOCATION: _____ U.S. L/C _____

SERVICE: _____ AMOUNT _____

EQUIPMENT IDENTIFICATION

TYPE	MODEL	SERIAL
Cooling Coil w/Fan		

STATUS: _____

REMARKS: Cooling Coil with fan for ice storage area was received according to importer. The unit was not at job-site and was not seen by the contractor.

EQUIPMENT VALUE

Equipment value will be considered in two parts. PART #1 will determine if the net sale value of the equipment as indicated by Mr. Matava and Mr. Stillson of Dunham-Bush appear to reflect reasonable pricing. Pricing consistency with competitive pricing quotations will also be considered. PART #2 will determine if the net sale price established in PART #1 is consistent with the final invoice. As stated by AID funding regulations the final invoice amount must reflect reasonable pricing.

PART #1

Competitive quotations were not obtainable on this specific project from the Egyptian Bank, D.I.B. Therefore, the contractor does not have specific competitive pricing information available on this project for evaluation. It is strongly recommended that competitive bids be obtained prior to issuing a letter of credit and kept on file by the lending institution.

As stated in the equipment identification section, one PCX-120 pkg. chiller and six Model A9 pumps were installed at the job-site. An evaporator coil and freon was verbally reported to have been received by the importer. However, since these items were not installed, seen, or identified by the contractor they cannot be included in the estimated value of equipment received.

The sale value of the chiller F.O.B. Factory is stated by two documents to be $31,048.00. These documents are:

Dunham-Bush Production Order No. EA 10080
Interview report from Mr. Matava and Mr. Stillson of Dunham-Bush

With the consistency of the above documentation and the previous project experience of the contractor the conclusion has been made that $31,048.00 does appear to reflect a reasonable market value for the Chiller F.O.B. Factory.

No documentation was presented for the cost of the six pumps. For reference the contractor used a letter dated 1-1-79 from Coolair to Dunham-Bush International giving cost breakdown for the Metenamy Ice Factory. This letter indicated a unit price of $853.00. This figure is used in the following evaluation, which yeilds a total of $5,118.00 for six pumps.

Therefore, the total for equipment installed at the job site is:

(1) PCX 120 Chiller	$31,048.00
(6) Model A9 Cent. Pumps	5,118.00
Total	$36,166.00

NOTE: This amount is in excess of the "NET SALE VALUE" indicated in the interview with Mr. Stillson and Mr. Matava. It is assumed that their "NET SALE VALUE" did not include the pumps. As indicated above the contractor has added a pump cost estimate and will use the increased amount to continue the evaluation.

PART #2

Consistency between the Invoice Amount and the "NET SALE VALUE" was established as follows:

Dunham-Bush Invoice #EA 10080 (no date)	$68,430.00
Less "NET SALE VALUE" from PART #1	(36,166.00)
Total	$32,264.00

NOTE: The invoice referenced above was for the full amount of the letter of credit. There are two additional invoices in this importers name. The two invoices are:

Dunham-Bush Invoice #EA 10080 (same # as above) dated 2-5-80	$ 9,867.00
Dunham-Bush Invoice #EA 10085 dated 2-5-80	$21,439.1?

The contractor could not establish the relevance of these two additional invoices.

Considering the first invoice only, $32,264.00 was retained for packaging, freight, insurance and additional profit. This dollar amount represents a mark-up of 89% of the "NET SALE VALUE". A mark-up of this magnitude appears to be a violation of the "Price Provisions" regulation for the use of AID funds. The regulation states, "No funds made available under this Act shall be used for the purchase in bulk of any commodities at prices higher than the market price prevailing in the United States at the time of purchase, adjusted for differences in the cost of transportation to destination, quality, and terms of payment".

It should also be noted that documentation supplied from Dunham-Bush (Sillcox Order #9915-CE) indicated freon and accessories totaling $12,295.75 were bought by C.A.C.

Corporation for this project. These items were not listed on the Proforma Invoices (no date) or the final invoice dated 9-20-78.

These items were not found on the job site location nor were they delivered to the job site according to the project importer. Quantities of the items listed on the Sillcox invoice are in excess of the requirements for one facility of this size. If these items were purchased for this project the necessity, present location, and quantity of these items should be explained by C.A.C. Corporation.

EQUIPMENT CAPABILITY

The expected equipment performance capability is stated by two project documents: the Bank's Appraisal Report (D.I.B.) and by the Project Contract.

> D.I.B. APPRAISAL REPORT - The Development Industrial Bank's appraisal states that the anticipated ice plant production is to be 25 tons of ice daily which is equivalent to 1000 blocks each of which weights 25 kilograms.
>
> PROJECT CONTRACT - The contract dated 3-6-79 states, "To provide and install an ice factory, production capacity one thousand ice slabs daily".

The importer stated that the chiller has only been run once. This occured when C.A.C. Corporation personnel were at the job site for chiller start-up. The contractor confirmed this information by noting that the elapsed chiller run time meter showed only four hours. Therefore, the contractor cannot report on the actual plant production. The job-site

inspection did indicate that the major system components were installed and it is not anticipated that additional major equipment purchases would be required.

SERVICE AND MAINTENANCE

As stated in the introduction both parts and labor are necessary for equipment operation and future maintenance.

PARTS - Parts will be considered by two classifications. Major system components and maintenance or operational parts and supplies.

**System Components such as rings, shafts or compressor components are not included with this project. All parts itemized for this project are maintenance parts or supplies (see next paragraph). Considering that service labor to perform a major overhaul would come from the United States, the contractor agrees that no parts of this type need to be inventoried at the job site.

**Maintenance parts and supplies consist of parts that are used in the normal operation of equipment. Since there is not a universal parts numbering system Dunham-Bush must be relied upon to provide parts identification information. Parts lists with the associated identification numbers are included as Exhibit F-1 and Exhibit F-5 for the packaged chiller and centrifugal pumps.

No spare parts or extra freon were listed on the final invoice, proforma invoice or the project contract. However, the importer indicated that C.A.C. Corporation did leave 139 empty 30 lb. cylinders of freon and 11

full 30 lb. cylinders of freon. These items were not seen by the contractor at the job site. According to the chiller nameplate data 312 lbs. of freon is required for a full operating charge. One hundred thirty nine (139) 30 lb. cylinders represents enough freon to fill the machine completely thirteen (13) times. If 139 cylinders were used during one service call by C.A.C. Corporation an explanation should be given accounting for "lost freon".

Spare parts are not listed on any project documentation. The contractor has included with Exhibit G-1 the spares as recommended by the Dunham-Bush home office in Hartford, Connecticut. Recommendations are preceeded by an asterisk and so noted in the exhibit.

For convenience in evaluating parts purchased the following parts price lists are also included:

PCX/DBX Consolidated Parts Price List	Exhibit F-2
Dunham-Bush Hermetic Oil Pump Price List	Exhibit F-3
Model A9 Centrifugal Pump Parts Prices	Exhibit F-6

LABOR - Labor may also be considered by the same two classifications as parts, major system component labor and maintenance labor.

**Service work for major overhauls or replacement of major system components was not found to be available locally. According to the regional sales office for Dunham-Bush, in Athens, start-up and major systems repair labor would be supplied from the United States.

**Maintenance or operational labor must be supplied locally. The contractor recommends that this work be performed by a qualified service agent or individual familiar with Dunham-Bush equipment, such as Mr. Salah Botros used by Badi El Hanafy in Aiat. The initial step toward proper operation and maintenance is obtaining and following the manufacturer's O & M manuals. The appropriate IPCX chiller operating and maintenance manual (Exhibit F-4) is included at the conclusion of this report section. Installation, operation and maintenance literature is also included for the Type A9 Centrifugal Pumps (Exhibit F-7).

SER/COM #5 (Talaat)
DUNHAM-BUSH LITERATURE
EXHIBIT INDEX

EQUIPMENT	REPLACEMENT PARTS LIST	PARTS PRICES	OPERATIONAL & MAINTENANCE MANUALS	RECOMMENDED SPARE PARTS LIST		
Model PCX 120-05Q Pkg. Chiller	F-1	F-2 F-3	F-4	F-1		
Model A9 Pumps	F-5	F-6	F-7			
? CE 32 CELF Evaporator						

724

EQUIPMENT LIST

CONTRACTOR ON-SITE INSPECTION	Three separate invoices reference this project DUNHAM-BUSH INVOICE #	DOCUMENT VERIFICATION		
		PROFORMA INVOICE	CONTRACT LOCAL	D.I.B. APPR. REPORT
(1) Pkg. Chiller w/screw compressor Model PCX 120-05Q (6) Pumps w/7½ H.P. Motors Model A9D905-1A or P/N 6-333002-02 (1) Evaporator w/fan arrived at job-site according to importer however, Evaporator was not physically seen by the Contractor.	INVOICE # EA 10080 No invoice date For account of Mohamed Talaat Reference Proforma No. X-DB/78-17 Dated 9/20/78 (1) Ice Macking Machine w/3 compressor set (2) Pumps Model A9D65-S Note: this invoice amount equals $68,430.00 which equals the full 4C amount	DB/78-17 . Dated 9/20/78 (1) Pkg. Chiller w/3 compressors Model No. IPWM-120 (2) Pumps Model No. A9D655-2	3/6/79 (1) Pkg. Chiller Model No. PCX-120 Screw Comp.	(1) Pkg. Chiller w/3 compressors Model IPWM-120 (2) Pumps Model A9D655-2 (2) Pumps Model A9 (1) Evaporator w/fan (1) Stand-by Heat Exchanger Unit
	INVOICE # EA 10080 Date 2/5/80 For account of Mohamed Talaat CE 32 CELF A 9D 1 Total Amount $9,867.00	D/B78-17R (2) Pumps Model No. A9 (1) Evaporator	Contract with no data Installation Only	
	INVOICE # EA 10085 Date 2/5/80 For account of Mohamed Talaat CE 32 CELF A 9D 1 This invoice also includes the $9,867.00 listed in the above Invoice # EA 10080.			

TOTAL AMOUNT $21,4[illegible].1?

SPARE PARTS LIST

CONTRACTOR ON-SITE INSPECTION	DUNHAM-BUSH INVOICE #	COMMENTS
Importer indicated C.A.C. left 139 empty 30 lb. cylinders of Freon R-22 and 11 full 30 lb. cylinders of Freon R-22 after the system start-up. None of the cylinders empty or full were available for inspection by the contractor.	No spare parts or extra Freon listed.	No spare parts or extra Freon listed on Proforma. No spare parts or extra Freon listed in Contract. (Other than normal operating Freon charge.)

SER/COM

IMPORTER: Mohamed Talaat

DATE 2/21/81

LOCATION: Girga

DIB L/C# 20101

SERVICE: Ice Plant

U.S. L/C 621125

AMOUNT USD $68,430

EQUIPMENT IDENTIFICATION

CHILLER

TYPE Pkg. Chiller w/Screw Compressor	MODEL PCX 120-05Q	SERIAL DPW1610F79X	
Motor	36518	I.D.# 1MA48	
Condenser	X2834X08	Natl. Bd. 55019	
Oil Sump	X2834X19	Natl. Bd. 55021	
Evaporator	X2834X10	Natl. Bd. 55020	

STATUS: Non-operational

Client waiting for start-up completion by C.A.C. Corporati

REMARKS:

121

SER/COM # 5

DATE _____

IMPORTER: _____ DIB L/C# _____

LOCATION: _____ U.S. L/C _____

SERVICE: _____ AMOUNT _____

EQUIPMENT IDENTIFICATION

	TYPE	MODEL	SERIAL
PUMP # 1	Cond. Water Pump	A9D90S-1A	60938
	Motor	(FR.) 0334	P/N6-333002-02
PUMP # 2	Cond. Water Pump	A9D90S-1	60940
	Motor	(FR.) 0334	P/N6-333002-02
PUMP # 3	Brine Pump	A9D90S-1A	60936
	Motor	(FR.) 0334	P/N6-333002-02

STATUS: _____

REMARKS: Importer has 2 pumps more than the quantity shown on the Proforma and final invoices. The importer was using one pump to provide additional circulation in the Brine Sump and the other extra pump was not installed in the system.

DATE _____

IMPORTER: _____ DIB L/C# _____

LOCATION: _____ U.S. L/C _____

SERVICE: _____ AMOUNT _____

EQUIPMENT IDENTIFICATION

PUMP # 4	TYPE Brine Pump	MODEL A9D90S-1N	SERIAL 60935
	Motor	(FR.) S213 JM	P/N6-333002-02
PUMP # 5	Brine Circulation	A9D90S-1A	60937
	Motor	(FR.) S213 JM	P/N6-333002-02
PUMP # 6	Extra(not installed)	A9D90S-1A	60939
	Motor	(FR.) S213 JM	P/N6-333002-02

STATUS: _____

REMARKS: _____

SER/COM # 5

DATE _____

IMPORTER: _____ DIB L/C# _____

LOCATION: _____ U.S. L/C _____

SERVICE: _____ AMOUNT _____

EQUIPMENT IDENTIFICATION

TYPE Cooling Coil w/Fan MODEL _____ SERIAL _____

STATUS: _____

REMARKS: Cooling Coil with fan for ice storage area was received according to importer. The unit was not at job-site and was not seen by the contractor.

SER/COM #5 (Talaat)
DUNHAM-BUSH LITERATURE
EXHIBIT INDEX

EQUIPMENT	REPLACEMENT PARTS LIST	PARTS PRICES	OPERATIONAL & MAINTENANCE MANUALS	RECOMMENDED SPARE PARTS LIST		
Model PCX 120-05Q Pkg. Chiller	F-1	F-2 F-3	F-4	F-1		
Model A9 Pumps	F-5	F-6	F-7			
? CE 32 CELF Evaporator						

Exhibit F-1

DESCRIPTION		D/B PART NO. STANDARD	D/B PART NO. ALTERNATE	QTY
CONTROL BOX 380/3/50 50HZ -1-50		X2834X20		
CONTROL CIRCUIT BREAKER (1CB)	*	BKR 75		1
OIL HTR CIRCUIT BREAKER (2CB)	*	BKR 74		1
MASTER CONTROL RELAY (1CR)	*	RLY 133		1
TRANSFER RELAY (2CR)	*	RLY 134		1
LOCK IN RELAY (4CR)		RLY 133		1
TIMER - SEAL OIL TEMP T'STAT (12 TR)	*	TMR 135		1
ANTI-RECYCLE TIMER (1TR)	*	TMR 114		1
OIL PRESS. FAILURE TIMER (2TR)	*	050800A1	*	1
OIL PUMP SHUT-DOWN TIMER (3TR)	*	TMR 105		1
START-UP TIME DELAY TIMER (4TR)	*	TMR 105		1
ELAPSED TIME INDICATOR (6TR)		TMR 86		1
HI/LO PRESS. CONTROL (1PS)		CNT 175		1
LOW SUCTION PRESSURE PUMP-DOWN AND UNLOAD CONTROL (2PS)		CNT 167		1
OIL FAILURE CONTROL (3PS)		SWT 80		1
TEMPERATURE LOAD CONTROL (TLC)	*	CNT 232		1
COMPRESSOR CONTROL RELAY (3CR)		RLY 134		1
CHILLED WATER THERMOSTAT (2 TAS)		CNT 55		1
TEMPERATURE CONTROL (13 TAS, 12TAS, 8TAS, 5TAS)	*	CNT 231	*	4
ON/OFF SWITCH WITH LIGHT (RED) (1SS)		SWT 83		1
LAMP (RED, SAFETY SWITCHES, OIL FAILURE) (2LT, 3LT)		LMP 15		2
LAMP (AMBER. ANTI-RECYCLE TIMER, START UP DELAY) (4LT, 5LT)		LMP 14		2
TRANSFORMER (24V SEC) (2T)		TSF 26		1
PUMP STARTER AUX CONTACT (AUX)		SWT 71		1
OIL PUMP STARTER (1M)		SRTD3A3D10		1
SUCTION PRESSURE GAGE		GAG 40		1
DISCHARGE, OIL PRESSURE GAGES		GAG 41		1
RELAY, BLOCKING (6CR)		RLY 134		1
RELAY, HOT GAS & LIMIT (8CR)		RLY 135		1
TIMER, UNLOADED START (7TR)		TMR 110		1

* 1 YEAR PARTS

DUNHAM-BUSH, INC. WEST HARTFORD DIVISION

PART NAME REPLACEMENT PARTS LIST FOR PCX 120-0 PKG CHILLERS

ENGINEERING FILE NO. X-2834 A/B/C

SCALE	DRAWN BY	CHECKED	UNLESS OTHERWISE SPECIFIED TOLERANCE ON
1	NAME WK	NAME	FRACTIONAL DIMENSIONS ±
	DATE	DATE	DECIMAL DIMENSIONS ±
			ANGLES ±

SUPERSEDES REV

* REVISION 7/3/79

132

DESCRIPTION	D/B PART NO. STANDARD	D/B PART NO. ALTERNATE	QTY
COMPRESSOR ASSEMBLY 1610DLF1LOD			
SUCTION GASKET (4" 150#)	GKT 252		2
DISCHARGE GASKET (3" 300#)	GKT 258		2
INDICATOR ASSEMBLY (SLIDE VALVE)	IDR 56A		1
MOTOR COUPLING	CPL 164		1
DISCHARGE CHECK VALVE	VAL726		1
SEAL FIELD REPLACEMENT KIT	XFRK 772		1
CHILLER ASSEMBLY	14" X2834X 10		
SUCTION HEAD FILTER	FLR58A		
FLOW SWITCH	SWT 61		1
CHILLER RELIEF VALVE	VAL 73A T1		1
PILOT EXPANSION VALVE	VAL 919		1
EXPANSION VALVE WITH COIL	VAL 786		1
CHILLER INLET HEAD GASKET	GKT 350T1		2
CHILLER OUTLET HEAD GASKET	RNG 181		1
SIGHT GLASS (MOISTURE INDICATOR)	0817G10		1
FILTER DRIER BLOCK	BLK 42		4
TEMPERATURE SENSOR CONTROL	CNT 233T4		1
LIQUID INJECTION ASSY	INJ3AT1		1
* EXPANSION VALVE	VAL691T1		1
* SOLENOID VALVE COIL	COL123T1		1
SOLENOID VALVE/LESS COIL	VAL902T10		1
SEAL OIL COOLER ASSEMBLY	SOC1AT1		
* SOLENOID VALVE COIL	COL122T1		1
* TEMPERATURE PILOT VALVE	VAL769		1
CHECK VALVE	VAL 388		1
SOLENOID VALVE/LESS COIL	VAL 488		1

DUNHAM-BUSH, INC.

WEST HARTFORD DIVISION

PART NAME REPLACEMENT PARTS LIST FOR PCX 120-0 PKG CHILLERS

ENGINEERING FILE NO. X-2834 A/B/C

SCALE	DRAWN BY	CHECKED	UNLESS OTHERWISE SPECIFIED TOLERANCE
—	NAME W/C	NAME	FRACTIONAL DIMENSIONS ±
	DATE 3-2-[illegible]	DATE [illegible]	DECIMAL DIMENSIONS ±
			ANGLES ±

DESCRIPTION		D/B PART NO: STANDARD	D/B PART NO: ALTERNATE	QTY
CONDENSER ASSEMBLY	14"	X2834X08		
CONDENSER RELIEF VALVE		VAL734T2		2
INLET HEAD GASKET		GKT 259		1
RETURN HEAD GASKET		GKT 143		1
REFRIGERANT OUTLET GASKET		GKT 62		2
OIL SUMP ASSEMBLY	16"	X2834X19		
OIL SUMP HEATER		HTR 71		2
				1
				1
SIGHT GLASS		GLS 16A		1
GLASS		GA 210		1
RETAINING NUT		GA 211		1
BACK-UP RING		GA 212		1
GASKET		GKT517		2
OIL LINE GASKETS (2 BOLT FLANGE)		GKT 340		4
SUMP DISCHARGE GASKET		GKT 258		1
SUMP DISCHARGE CHECK VALVE GASKET		GKT 267		2
OIL FILTER ASSEMBLY		FLR 110AT1,		
FILTER ELEMENT W/GASKETS		FLR 125		1
UNLOAD SOLENOID VALVE ASSY		VAL 509A		1
* 24V COIL		COL122T41		2
* 115V COIL		COL122T40		1
SOLENOID VALVE/LESS COIL		VAL 488		3
METERING VALVE		VAL 547		3
ACCESSORIES				
OIL		OIL 3		35 GAL

This drawing contains designs and other information which are the property of DUNHAM-BUSH, IN
This drawing may not, in whole or in part, be duplicated or disclosed or used for manufacture of
part disclosed herein, without the prior written permission of DUNHAM-BUSH, INC.

DUNHAM-BUSH, INC.
WEST HARTFORD CONN 06110 USA
WEST HARTFORD DIVISION

PART NAME	REPLACEMENT PARTS LIST FOR PCX 120-0 PKG CHILLERS
MAT'L	ENGINEERING FILE NO. X- X2834 A/B/C

SCALE	DRAWN BY	CHECKED	UNLESS OTHERWISE SPECIFIED TOLERANCE
	NAME WK	NAME NC	FRACTIONAL DIMENSIONS ±
	DATE 9-28-73	DATE 12-1-75	DECIMAL DIMENSIONS ±
			ANGLES ±

EXHIBIT F-2

DUNHAM-BUSH

PCX/DBX CONSOLIDATED PARTS PRICE LIST

Refer to latest revision of Form 1278 for Terms of Sale.

Terms of Shipment: F.O.B. Shipping Point.

All prices subject to change without notice.

Parts will be invoiced at prices in effect at the time of shipment.

All components and controls listed are for standard units only, unless otherwise noted.

Minimum Billing is $25.00.

ORDERING INSTRUCTIONS

1. When ordering, specify Model, Serial No., "X" No., and other pertinent information on the face of the order.
2. Parts selections should be made from the "RPL" furnished with the unit where possible. For convenience, we have included several pages listing field replacement kits with a brief description of each at the back of this form.
3. Send all orders to: Dunham-Bush, Inc., Service Parts Dept.
   179 South St., West Hartford, Conn. 06110
4. All prices are for one each part or kit as applicable.
5. Federal, state, local or other taxes are not included in the attached prices.
6. All orders requiring Special Handling, will have a $50 net additional charge invoiced or actual cost, whichever is higher. This includes delivery to the airport, bus station, etc.

PART NO.	DESCRIPTION	LIST PRICE
BKR74	CIRCUIT BREAKER	28.62
BKR75	CIRCUIT BREAKER	28.62
BLK41	DRIER BLOCK	59.57
BLK42	DRIER BLOCK	23.59
CNT55	CONTROL, TEMP	70.18
CNT137T1	CONTROL, MTR PRT	100.17
CNT167	CONTROL, LOW PRESS	69.22
CNT175	CONTROL, DUAL PRESS	88.03
CNT206	CONTROL, TEMP	63.55
CNT208	CONTROL, TEMP	1,020.13
CNT231	CONTROL, TEMP	87.82
CNT232	CONTROL, TLC	963.31
CNT233T1	CONT SENR 35/55DEG	101.28
CNT233T2	CONT SENR 55/75DEG	241.88
CNT233T3	CONT SENR-35/-15DEG	223.71
CNT233T5	CONT SENR-15/10DEG	258.84
CNT233T5	CONT SENSR 10/35DEG	258.84
CNT242	CONTROL, LOW PRESS	64.13
CNT244	CONTROL, TEMP	67.89
CNT249	CONTROL, PRESS-DIFF	514.00
CNT276	CONTROL, PRESS	274.06
CNT277	CONTROL, PRESS	592.60
COL122T1	COIL 120V	26.62
COL122T40	COIL 120V	28.62
COL122T41	COIL 24V	28.62
COL123T1	COIL 120V	33.39
FLR47A	FILTER, SUCTION	87.42
FLR48A	FILTER, SUCTION	125.95
FLR49A	FILTER, SUCTION	102.78
FLR71	FILTER, OIL	22.79
FLR95T1	FILTER, SUCTION 4	243.28
FLR95T2	FILTER, SUCTION 5	307.33
FLR95T3	FILTER, SUCTION 6	390.80
FLR107T1	FILTER, OIL	400.88
FLR107T2	FILTER, OIL	489.70
FLR125	FILTER, OIL	36.06
GAG40	GAUGE	34.19
GAG41	GAUGE	34.19
GAG52	GAUGE	99.38
GKT143	GASKET	15.42
GKT222	GASKET	20.50
GKT223	GASKET	15.70
GKT224	GASKET	6.54
GKT229	GASKET	5.14
GKT238	GASKET	.60
GKT242	GASKET	17.56
GKT243	GASKET	24.38
GKT248	GASKET	5.95
GKT250	GASKET	2.73
GKT252	GASKET	7.02
GKT257	GASKET	4.61
GKT258	GASKET	3.34
GKT259	GASKET	25.05
GKT260	GASKET	27.78
GKT261	GASKET	21.37
GKT265	GASKET	40.07
GKT266	GASKET	16.70
GKT267	GASKET	2.67
GKT269	GASKET	1.34
GKT279	GASKET	52.15
GKT280	GASKET	52.15
GKT313	GASKET	21.43
GKT314	GASKET	5.54
GKT318	GASKET	13.70
GKT329	GASKET	1.40
GKT334	GASKET	3.68
GKT350T1	GASKET	15.62
GKT350T2	GASKET	21.23
GKT350T3	GASKET	40.07
GKT350T4	GASKET	33.59
GKT350T5	GASKET	36.67
GKT380	GASKET	8.15
GKT382	GASKET	18.09
GKT383	GASKET	8.75
GKT367	GASKET	21.71
GKT415	GASKET	10.48
GKT416	GASKET	9.41
GKT417	GASKET	8.75
GKT427	GASKET	30.05
GKT429T1	GASKET	70.12
GKT429T2	GASKET	70.12
GKT431T1	GASKET	55.43
GKT431T2	GASKET	52.43
GKT433T1	GASKET	61.78
GKT433T2	GASKET	61.76
GKT435T1	GASKET	80.80
GKT435T2	GASKET	80.80
GKT446	GASKET	14.09
GKT447	GASKET	14.89
GKT448	GASKET	12.36
GKT466	GASKET	11.35
GKT467	GASKET	11.62
GKT468	GASKET	11.09
GKT503	GASKET	83.48

PART NO.	DESCRIPTION	LIST PRICE
GKT504	GASKET	89.16
GKT505	GASKET	101.84
GKT506	GASKET	111.86
GKT507	GASKET	115.20
GKT508	GASKET	81.20
GKT509	GASKET	86.81
GKT510	GASKET	100.17
GKT511	GASKET	110.19
GKT512	GASKET	113.53
GKT117	GASKET	1.20
GLS16A	SIGHT GLASS ASSY	38.00
HTR71	HEATER, OIL	134.43
IDR48	INDICATOR, LIQ 5/8	21.78
IDR49	INDICATOR, LIQ 7/8	21.78
IDR56A	IND ASSY, LESS SCALE	170.89
IDR57A	IND ASSY, LESS SCALE	183.51
KIT250	KIT, CAM SWITCH	59.96
LMP10	LIGHT, RED	10.60
LMP11	LIGHT, YELLOW	10.60
LMP12	LIGHT, WHITE	10.60
LMP13	LIGHT, WHITE	9.06
LMP14	LIGHT, AMBER	13.04
LMP15	LIGHT, RED	11.50
PMP91T3	PUMP, OIL VIKING	1,444.99
PMP91T4	PUMP, OIL VIKING	1,689.59
PMP91T6	PUMP, OIL VIKING	2,212.64
RLY126	RELAY	140.77
RLY127	RELAY	193.50
RLY129	RELAY	99.22
RLY133	RELAY	19.29
RLY134	RELAY	27.40
RLY135	RELAY FLIP PACK	145.75
RNG104	RING	2.20
RNG129	RING	30.98
RNG130	RING	23.11
RNG13	RING	32.39
RNG132	RING	32.52
RNG135	RING	1.06
RNG136	RING	7.53
RNG144	RING	5.09
RNG145	RING	4.56
RNG146	RING	5.09
RNG147	RING	7.37
RNG148	RING	3.07
RNG162	RING	40.07
RNG164	RING	17.36
RNG165	RING	4.67
RNG166	RING	1.96
RNG167	RING	1.01
RNG170	RING	42.88
RNG173	RING	31.59
RNG181	RING	28.92
RNG182	RING	19.71
RNG202	RING	2.23
RNG203	RING	24.17
RNG204	RING	.21
RNG205	RING	2.44
RNG206	RING	1.86
RNG207	RING	3.23
RNG209	RING	4.45
RNG210	RING	3.02
RNG211	RING	3.66
RNG217T3	RING	7.10
RNG217T4	RING	99.85
RNG217T5	RING	193.34
RNG229	RING	41.16
RNG230	RING	1.27
RNG236	RING	.95
RNG237	RING	.80
RNG238	RING	.95
RNG239	RING	.80
RNG255	RING	1.70
RNG256	RING	.69
RNG275	RING	.42
RNG282T2	RING	3.60
RNG283T3	RING	5.19
RNG283T4	RING	3.98
RNG293	RING	.42
RNG294T1	RING	5.57
SKA46T1	STRAINER, OIL	66.78
SKA52	STRAINER, OIL	43.99
SKA64A	STRAINER ASSY, OIL	FACTORY
SKA79A	STRAINER ASSY, OIL	FACTORY
SKA80A	STRAINER ASSY, OIL	FACTORY
SWT61	SWITCH, FLOW	104.78
SWT71	SWITCH, AUX	6.89
SWT80	SWITCH, PRESS-DIFF	422.30
SWT82	SWITCH	42.98
SWT83	SWITCH	16.96
SWT89	SWITCH, REED	41.27
SWT91	SWITCH	56.94
TMR79	TIMER, ELAPSED	20.78
TMR83	TIMER	351.92
TMR103	TIMER	162.88

PART NO.	DESCRIPTION	LIST PRICE
TMR105	TIMER	58.41
TMR106	TIMER	489.72
TMR110	TIMER	73.60
TMR114	TIMER	160.80
TMR135	TIMER	64.55
TOL1	TOOL,INNER LKNUT 163	298.18
TOL2	TOOL,INNER LKNUT 204	292.17
TOL3	TOOL,INNER LKNUT 255	440.00
TOL4	TOOL,LOCKNUT SPINDLE	170.29
TOL5	TOOL,BEARING LOCKNUT	1,402.38
TOL6	TOOL,OUTER NUT 163	292.17
TOL7	TOOL,OUTER NUT 204	347.26
TOL8	TOOL,OUTER NUT 255	466.00
TOL9	TOOL,SLIPPER SEAL	176.00
TOL10	TOOL,SEAL ASSY	188.00
TOL11T1	TOOL,SEAL ASSY	834.75
TOL11T2	TOOL,SEAL ASSY	1,101.87
TOL11T3	TOOL,SEAL ASSY	1,480.00
TOL11T4	TOOL,SEAL ASSY	1,402.38
TOL12	TOOL,SLIDE VALVE	1,080.00
TOL13	TOOL,BUSHING	26.04
TOL14	TOOL,STATOR PULLER	387.32
TOL15	TOOL,THRUST BRG	357.27
TOL16T1	TOOL,COLLAR ASSY 163	294.23
TOL16T2	TOOL,COLLAR ASSY	227.05
TOL16T3	TOOL,COLLAR ASSY	293.83
TOL17	TOOL,TORQUE WRENCH	1,402.38
TOL18	TOOL,TORQUE WRENCH	1,402.38
TOL19	TOOL,TORQUE WRENCH	645.00
TOL20	TOOL,SPIND GAGE PLUG	380.00
TOL22	TOOL,AIR CYL ADJ	1,035.09
TOL23T1	TOOL,MOTOR HOOK	934.92
TOL23T2	TOOL,MOTOR HOOK	934.92
TOL24	TOOL,SLIPPER SEAL	160.27
TSF26	TRANSFORMER	23.69
VAL388	VALVE,CHECK	32.70
VAL448	VALVE,WATER REGULATR	680.49
VAL449	VALVE,WATER REGULATR	961.10
VAL454	VALVE TX	119.73
VAL456	VALVE,GLOBE	9.12
VAL460	VALVE,TX	588.41
VAL466	VALVE,TX	1,337.56
VAL488	VALVE,SOLENOID	46.64
VAL494	VALVE,TX	622.27
VAL509A	VALVE ASSY, UNLOAD	441.55
VAL537	VALVE,TX	660.86
VAL538	VALVE,TX	887.11
VAL539	VALVE,TX	583.53
VAL547	VALVE,GLOBE	21.71
VAL585	VALVE, TX	887.11
VAL678	VALVE, TX	119.73
VAL691T1	VALVE, TX	307.93
VAL691T2	VALVE, TX	451.98
VAL691T3	VALVE, TX	451.98
VAL691T4	VALVE, TX	470.83
VAL691T5	VALVE,TX	470.83
VAL691T6	VALVE,TX	392.36
VAL720	VALVE,PRESS REG	257.79
VAL726	VALVE,CHECK	691.12
VAL727	VALVE,CHECK	622.80
VAL734T1	VALVE,RELIEF	81.46
VAL734T2	VALVE,RELIEF	81.46
VAL734T3	VALVE,RELIEF	81.46
VAL735T1	VALVE,RELIEF	117.98
VAL735T2	VALVE,RELIEF	111.30
VAL735T3	VALVE,RELIEF	117.98
VAL769	VALVE,PRESS REGULATR	213.86
VAL784	VALVE,PRESS REGULATR	429.94
VAL820	VALVE,TX	1,284.24
VAL833	VALVE,PRESS REGULATR	259.81
VAL902T1	VALVE,SOLENOID	130.06
VAL902T3	VALVE,SOLENOID	193.13
VAL902T10	VALVE,SOLENOID	78.65
VAL919	VALVE,TX	205.64
XFRK4T1	OIL PUMP ASSY 208V	FACTORY
XFRK4T2	OIL PUMP ASSY 230V	FACTORY
XFRK4T3	OIL PUMP ASSY 460V	FACTORY
XFRK5	OIL PUMP CONV KIT	FACTORY
XFRK7T2	FLD REP KIT SHF SEAL	849.06
XFRK7T4	FLD REP KIT SHF SEAL	983.68
XFRK7T6	FLD REP KIT SHF SEAL	973.08
XFRK7T7	FLD REP KIT SHF SEAL	1,013.36
XFRK7T8	FLD REP KIT SHF SEAL	1,131.02
XFRK7T9	FLD REP KIT SHF SEAL	1,719.32
XFRK7T10	FLD REP KIT SHF SEAL	1,631.34
XFRK7T11	FLD REP KIT SHF SEAL	1,933.44
XFRK7T12	FLD REP KIT SHF SEAL	1,335.60
XFRK7T14	FLD REP KIT SHF SEAL	1,425.70
XFRK7T15	FLD REP KIT SHF SEAL	1,219.00
XFRK7T16	FLD REP KIT SHF SEAL	1,257.16
XFRK7T17	FLD REP KIT SHF SEAL	1,232.76
XFRK7T18	FLD REP KIT SHF SEAL	1,587.88
XFRK7T19	FLD REP KIT SHF SEAL	1,219.00
XFRK7T20	FLD REP KIT SHF SEAL	975.20
XFRK7T21	FLD REP KIT SHF SEAL	828.92
XFRK7T22	FLD REP KIT SHF SEAL	1,344.08
XFRK7T23	FLD REP KIT SHF SEAL	1,110.88
XFRK7T24	FLD REP KIT SHF SEAL	1,948.28
XFRK7T25	FLD REP KIT SHF SEAL	1,871.96
XFRK7T26	FLD REP KIT SHF SEAL	2,028.84
XFRK7T27	FLD REP KIT SHF SEAL	1,570.92
XFRK7T28	FLD REP KIT SHF SEAL	1,961.00
XFRK8T30	KIT,GASKET 163DD	323.01
XFRK8T31	KIT,GASKET 163HER	324.35
XFRK8T32	KIT,GASKET 204DD	203.54
XFRK8T33	KIT,GASKET 204HER	251.90
XFRK8T34	KIT,GASKET 255DD	309.72
XFRK8T35	KIT,GASKET 255HER	408.49
XFRK10T1	SEE PG 5 FOR DESCRIP	56.56
XFRK10T2	SEE PG 5 FOR DESCRIP	51.95
XFRK10T3	SEE PG 5 FOR DESCRIP	46.01
XFRK10T4	SEE PG 5 FOR DESCRIP	66.58
XFRK10T5	SEE PG 5 FOR DESCRIP	61.90
XFRK10T6	SEE PG 5 FOR DESCRIP	56.03
XFRK10T7	SEE PG 5 FOR DESCRIP	77.44
XFRK10T8	SEE PG 5 FOR DESCRIP	64.91
XFRK10T9	SEE PG 5 FOR DESCRIP	62.11
XFRK10T10*		99.04
XFRK11	FLD REP KIT,OIL F SH	538.85
XFRK19T1	FLDREP KIT,TLC35/55D	939.86
XFRK19T2	FLDREP KIT,TLC10/35D	990.02
XFRK19T3	FLDRP KIT,TLC=15/10D	981.87
XFRK19T4	FLDREPKITTLC=35/=15D	1,044.30
XFRK20T1	FLDREPKIT,TLC 35/55D	1,027.14
XFRK20T2	FLDREPKIT,TLC 10/35D	1,096.59
XFRK10T3	FLDREPKIT,TLC=15/10D	1,088.45
XFRK20T4	FLDREPKIT,TLC=35/=15	1,131.59
XFRK20T5	FLDREPKIT,TLC=55/=35	1,141.61
XFRK24T1	SEE PAGE5 FOR DESCR	1,093.25
XFRK24T2	SEE PAGE5 FOR DESCR	931.05
XFRK24T3	SEE PAGE5 FOR DESCR	1,016.25
XFRK24T4	SEE PAGE5 FOR DESCR	1,028.88
XFRK24T5	SEE PAGE5 FOR DESCR	1,209.39
XFRK24T6	SEE PAGE5 FOR DESCR	1,171.38
XFRK24T7	SEE PAGE5 FOR DESCR	1,021.67
XFRK24T8	SEE PAGE5 FOR DESCR	988.81
XFRK24T9	SEE PAGE5 FOR DESCR	1,090.32
XFRK24T10	SEE PAGE5 FOR DESCR	1,249.66
XFRK24T11	SEE PAGE5 FOR DESCR	1,178.80
XFRK24T12	SEE PAGE5 FOR DESCR	1,261.15
XFRK24T13	SEE PAGE5 FOR DESCR	1,142.34
XFRK25T1	FLDREPLKIT,REED SWIT	254.63
XFRK25T2	FDREPKIT,REEDSWTCAM	497.38
XFRK27T1*	SEE PAGE 5 FOR DESCR	1,332.87
XFRK27T2*	SEE PAGE 5 FOR DESCR	994.15
XFRK27T3	SEE PAGE 5 FOR DESCR	1,677.85
XFRK27T5*	SEE PAGE 5 FOR DESCR	3,057.53
XFRK27T6*	SEE PAGE 5 FOR DESCR	2,364.21
XFRK27T11	SEE PAGE 5 FOR DESCR	1,832.64
XFRK27T12	SEE PAGE 5 FOR DESCR	1,587.42
XFRK27T13	SEE PAGE 5 FOR DESCR	2,349.32
XFRK27T15	SEE PAGE 5 FOR DESCR	3,917.84
XFRK27T16	SEE PAGE 5 FOR DESCR	3,173.06
XFRK28	F R KIT,MTR HTR 255	286.83
XFRK29	F R KIT,MTR HTR 204	205.68
XFRK30	F R KIT,MTR HTR 163	204.21
XFRK31T1	SEE PAGE 5 FOR DESCR	1,066.15
XFRK31T2	SEE PAGE 5 FOR DESCR	4,171.88
XFRK31T3	SEE PAGE 5 FOR DESCR	1,038.77
XFRK31T4	SEE PAGE 5 FOR DESCR	4,163.00
XFRK31T5	SEE PAGE 5 FOR DESCR	1,031.75
XFRK31T6	SEE PAGE 5 FOR DESCR	4,323.60
XFRK31T7	SEE PAGE 5 FOR DESCR	1,128.25
XFRK31T8	SEE PAGE 5 FOR DESCR	4,420.43
XFRK31T9	SEE PAGE 5 FOR DESCR	1,189.09
XFRK31T10	SEE PAGE 5 FOR DESCR	4,472.99
XFRK31T11	SEE PAGE 5 FOR DESCR	1,294.00
XFRK31T12	SEE PAGE 5 FOR DESCR	5,573.46
XFRK31T13	SEE PAGE 5 FOR DESCR	1,201.04
XFRK31T14	SEE PAGE 5 FOR DESCR	5,492.05
XFRK31T15	SEE PAGE 5 FOR DESCR	1,328.66
XFRK31T16	SEE PAGE 5 FOR DESCR	5,619.34
XFRK31T17	SEE PAGE 5 FOR DESCR	1,677.38
XFRK31T18	SEE PAGE 5 FOR DESCR	6,015.54
XFRK31T21	SEE PAGE 5 FOR DESCR	1,096.11
XFRK31T22	SEE PAGE 5 FOR DESCR	3,743.89
XFRK31T23	SEE PAGE 5 FOR DESCR	1,018.73
XFRK31T24	SEE PAGE 5 FOR DESCR	3,734.94
XFRK31T26	SEE PAGE 5 FOR DESCR	3,788.16
XFRK31T28	SEE PAGE 5 FOR DESCR	3,885.00
XFRK31T30	SEE PAGE 5 FOR DESCR	3,937.55
XFRK31T32	SEE PAGE 5 FOR DESCR	4,814.57
XFRK31T34	SEE PAGE 5 FOR DESCR	4,733.10
XFRK31T36	SEE PAGE 5 FOR DESCR	4,860.39
XFRK31T38	SEE PAGE 5 FOR DESCR	5,256.66
XFRK32	SEE PAGE 5 FOR DESCR	222.31
XFRK33T1	SEE PAGE 5 FOR DESCR	153.27
XFRK33T2	SEE PAGE 5 FOR DESCR	341.25

PART NO.	DESCRIPTION	LIST PRICE
XFRK33T3	SEE PAGE 5 FOR DESCR	233.33
XFRK33T4	SEE PAGE 5 FOR DESCR	654.04
XFRK42	F R KIT, SLIDE VALVE	27.85
050014A1	IDR CONV 1610A/B	285.01
050014A2	IDR CONV 1615 A/B	270.19
050014A3	IDR CONV 2010	280.07
050014A4	IDR CONV 2013	293.30
050014A5	IDR CONV 2015	290.83
050014A6	IDR CONV 2510	306.19
050014A7	IDR CONV 2515	314.21
050053A1	F R KIT,SEAL 255	1,675.98
050053A2	F R KIT,SEAL 255	1,314.70
050053A3	F R KIT,SEAL 255	1,651.67
050053A4	F R KIT,SEAL 255	1,405.58
050053A5	F R KIT,SEAL 255	1,220.60
050110A2	VALVE,TX	743.53
05011A3	VALVE,TX	701.05
050110A4	VALVE,TX	802.17
050110A5	VALVE,TX	850.25
050110A6	VALVE,TX	1,128.44
050110A7	VALVE,TX	1,146.08
050147A1	LIQ INJ LINE ASSY	1,282.84
050147A2	LIQ INJ LINE ASSY	1,282.84
050155A1	GAUGE	40.74
050156A1	GAUGE	40.74
051068A1	F R KIT,MTR PRUT	105.71
050181A1	RELAY	73.03
050182A1	LAMP	3.66
050182A2	LAMP	3.66
050183A1	LIGHT	12.19
050218A2	VALVE,TX	466.77
050218A4	VALVE,TX	466.77
050266A1	VALVE,TX	166.58
050309A1	CORE, FILTER	22.15
050414A1	VALVE,TX	530.05
050800A1	RELAY,TIME	96.46
0609P65	VALVE RELIEF	38.80
0817610	SIGHT GLASS, LIQUID	24.54
050664A1	SEAL,VIKING PUMP	2.28

Exhibit F-3

DUNHAM-BUSH PRICES

FORM NO. 4632-1F
EFFECTIVE
MARCH 1981
SUPERSEDES 4632-1E

PCX/DBX HERMETIC OIL PUMP REPLACEMENT PARTS PRICE

SELECTION

IF THIS PUMP IS ON THE UNIT	REPLACE IT WITH THIS PUMP & KIT OR KITS	ALSO SEND STRAINER ASSEMBLY
1. PMP 84 (OBSOLETE)	XFRK - 4 XFRK - 5	SELECT PROPER STRAINER FROM TABLE
2. PMP 86T1 (OBSOLETE)		
3. PMP 86T2 (OBSOLETE)		
4. PMP 88A	XFRK - 4	
5. PMP 90T1		
6. PMP 90T2		

PCX-H	120	150	180	230	290	350	400	450	500	580	630	700	750
Strainer	SRA 80A						SRA 79A	SRA 64A					
Oil Sep.	Spool						20"	24"	24"	24"	24"	24"	26"
								SEP – SUMP DIA					
PCX-O	120	150	180	230	290	350	400	450	500	580	630	700	750
Strainer	SRA 79A							SRA 64A					
Oil Sep.	16"	16"	16"	18"	18"	18"	20"	24"	24"	24"	24"	24"	26"
	SEP – SUMP DIA												
DBX	1610	1613	1615	2010	2013	2015							
Strainer	SRA 79A												
Oil Sep.	18"	18"	18"	20"	20"	20"							
	SEP – SUMP DIA												
ARPCX-120													
Strainer	SRA 79A												
Oil Sep.	20"												

PART NUMBER	DESCRIPTION	LIST PRICE See Note (1)
XFRK 4	REPLACEMENT OIL PUMP & GASKETS	$4,090.00
XFRK 5	PIPING CONVERSION KIT	246.00
SRA 64A	STRAINER ASSEMBLY	316.00
SRA 79A	STRAINER ASSEMBLY	274.00
SRA 80A	STRAINER ASSEMBLY	268.00

1. Ordering Instructions: Oil pump order will not be accepted unless it includes the following information:
   a) Oil pump motor voltage, phase, hertz
   b) Complete oil pump nameplate data, including Pump Part No. and Type No.
   c) Complete unit model no.
   d) Complete unit serial no.
   e) Engineering file no. ("X" No.)

2. If out of warranty the following credit will be issued depending on the condition of the returned pump as determined by the West Hartford Quality Control Department.
   a) Current Pump Models

	Credit List Deduct
1) Pump failure (other parts useable)	$1,514.00
2) Motor burnout (other parts useable)	1,293.00
3) Pump and motor failure (Housing and shaft useable)	946.00
b) Obsolete pump model	(No Credit)

   c) Follow RGB Procedure for returning the pump

3. Certain PCX/DBX units may have a special oil pump depending on the application, e.g. an open type pump may be supplied for explosion proof installations, etc. Supply all pump data to West Hartford, Order Service Department. Contact West Hartford Order Service for pricing and delivery.

PRICES AND SPECIFICATIONS SUBJECT TO CHANGE WITHOUT NOTICE.
FOR TERMS OF SALE REFER TO LATEST REVISION OF FORM 1278
PRICES F.O.B. WEST HARTFORD, CONNECTICUT

DUNHAM-BUSH, INC. • West Hartford, Connecticut 06110, U.S.A.

739

Exhibit 4

FORM 6139B

SUPERSEDES 6139A AND 6139-2

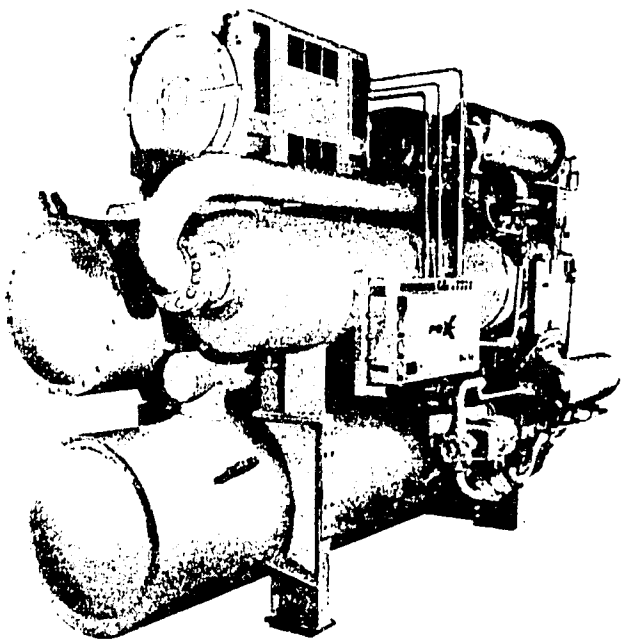

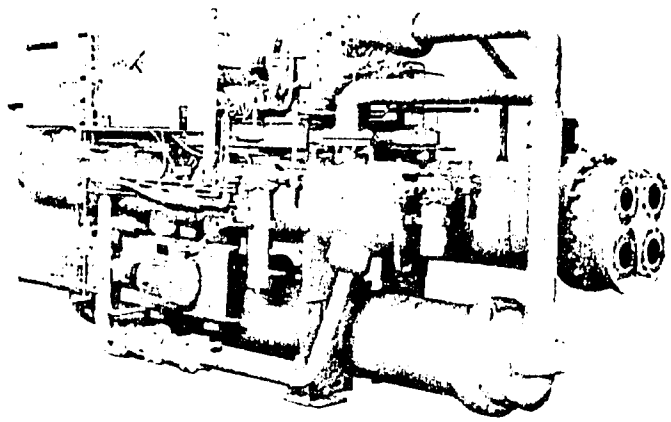

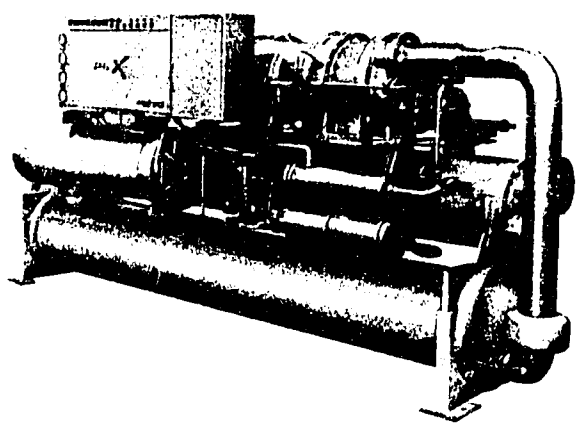

DUNHAM-BUSH

PEX-II, PEX-O, PEX-OHR & PAX PACKAGED CHILLERS

INSTALLATION, OPERATION AND MAINTENANCE INSTRUCTIONS

740

TYPICAL UNIT COMPONENTS

PCX-O PACKAGED CHILLER (DIRECT EXPANSION)

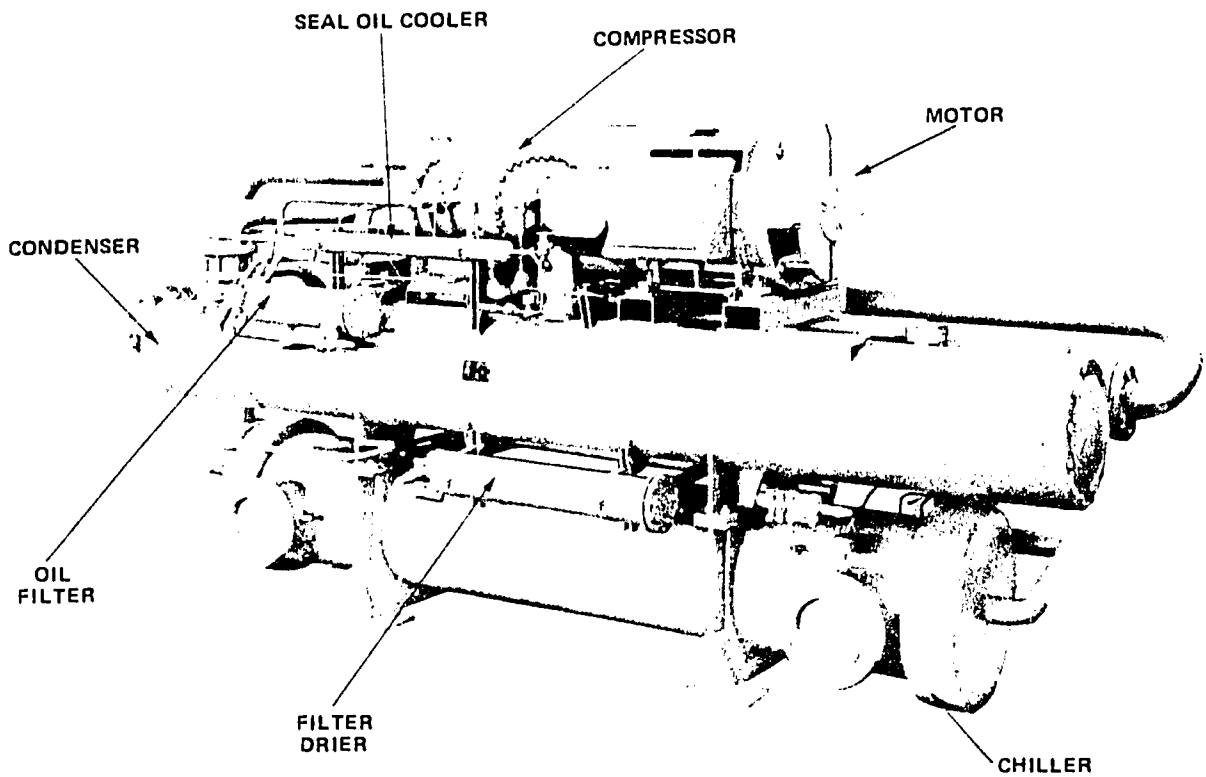

PCX-OHR HEAT RECLAIM PACKAGED CHILLER (DIRECT EXPANSION)

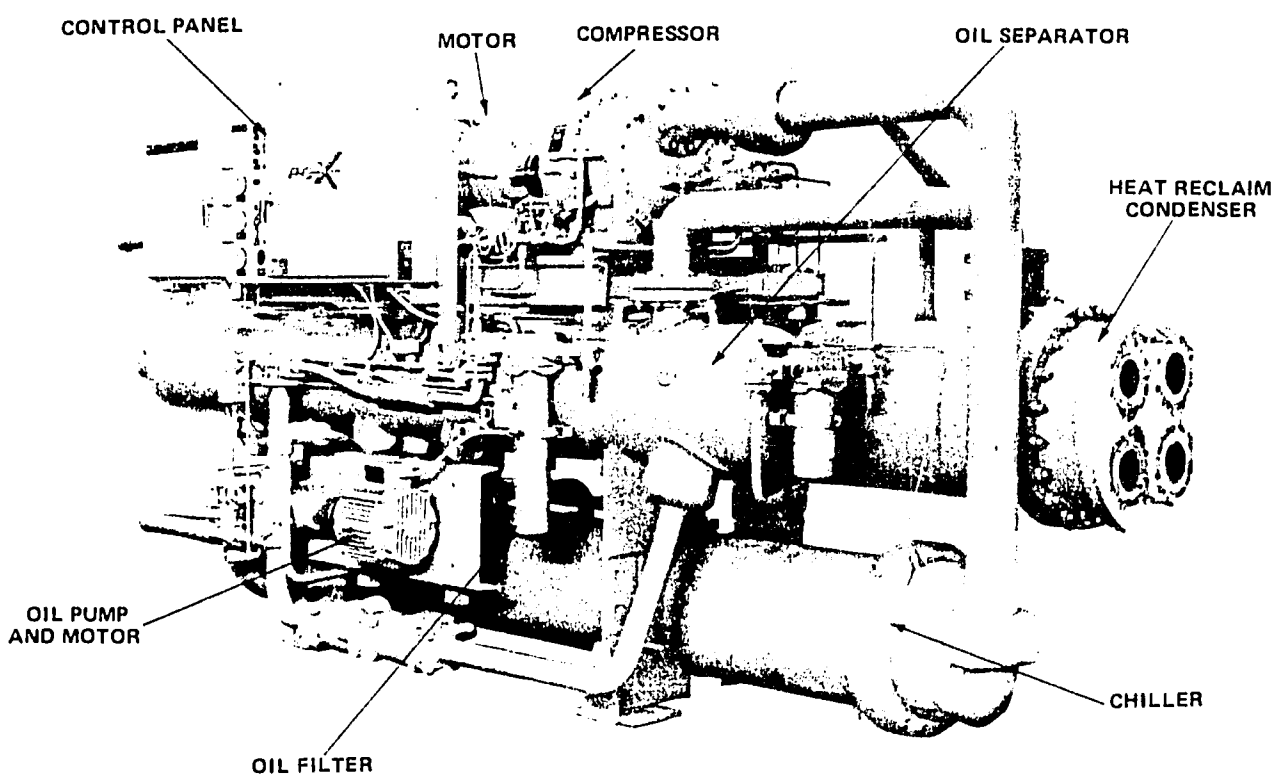

TYPICAL UNIT COMPONENTS

IPCX-O INDUSTRIAL PACKAGED CHILLER (DIRECT EXPANSION)

PCX-H HERMETIC PACKAGED CHILLER (DIRECT EXPANSION)

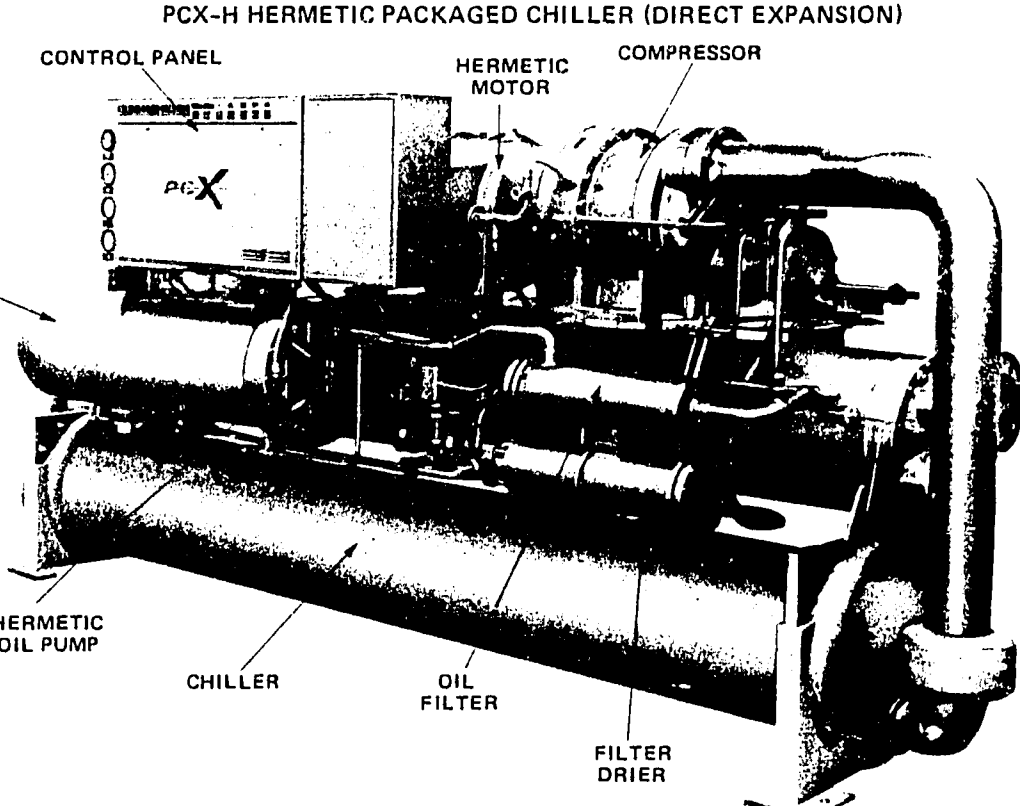

INDEX

TABLE OF CONTENTS

I. GENERAL INFORMATION — PAGE

A. Shipping 1
B. Receiving Inspection 1
C. Rigging and Moving 1

II. INSTALLATION

A. Location 2
B. Mounting 2
C. Leveling 2
D. Unmounted Accessories 2
E. External Connections 2-4
F. Request for Start-Up Representative . . . 4

III. OPERATION

A. General 5
B. Systems 6
C. Component Operation 7-12
D. Optional Subsystem Operation 12-13
E. Typical Piping Schematics 13-16
F. Function of Electrical Controls 17-20
G. Typical Electrical Schematics 21-26

IV. MAINTENANCE — PAGE

A. General 27
B. Periodic Maintenance 27-29
C. Maintenance Records 29-30
D. Oil Removal/Addition 31
E. Transferring/Evacuating/ Charging Refrig. 32-34
F. Component Maintenance 35-46
G. Optional Subsystem Maintenance 47
H. System Tests 48-51

V. TROUBLE SHOOTING

A. Trouble Shooting Chart 52-53

VI. APPENDIX

A. Daily Operating Log 54
B. Monthly Operating Log 55
C. Condenser Water Piping 56
D. Comp. Lubricating Requirements 57
E. Typical Information Labels 58-59

SERVICE PROCEDURES

NO.	PROCEDURE	PAGE
SP-1	*Oil Removal*	31
SP-2	*Oil Replenishment (Vacuum Method)*	31
SP-3	*Oil Replenishment (Pump Method)*	31
SP-4	*Relief Valve Access*	32
SP-5	*Service Valve Access*	32
SP-6	*Charging Valve Access*	32
SP-7	*Partial Pumpdown*	33
SP-8	*Liquid Refrig. Transfer*	33
SP-9	*Gas Refrig. Transfer from Chiller*	33
SP-10	*Liq. Refrig. Transfer from Condenser*	33
SP-11	*Gas Refrig. Transfer From Condenser*	33
SP-12	*Evacuation/Dehydration*	33
SP-13	*Initial Gas Refrig. Charging*	34
SP-14	*Liquid Refrig. Charging*	34
SP-15	*Adding to Refrig. Charge*	34
SP-16	*Compressor Coupling Alignment*	35
SP-17	*Oil Filter Replacement*	36
SP-18	*Coupling Alignment, Open Oil Pump*	37
SP-19	*Clearance Adjust., Open Oil Pump*	37
SP-20	*Maintenance, Hermetic Oil Pump*	37
SP-21	*Oil Pressure Relief Valve Adjust.*	38
SP-22	*Oil Pressure Relief Valve Assy.*	38
SP-23	*Replacement, Oil Sump Heaters*	38
SP-24	*Oil Cooler, Valve Adjustment*	40
SP-25	*Oil Cooler, Valve Flushing*	40
SP-26	*Seal Oil Cooler, Temp. Adjust.*	40
SP-27	*Condenser Cleaning, Mechanical*	41
SP-28	*Condenser Tube Plugging*	41
SP-29	*Filter Drier Replacement*	42
SP-30	*Superheat Adjustment*	43
SP-31	*Thermo-Expansion Valve Disassy.*	43
SP-32	*Disassy/Maintenance P.O.S. Valve*	44
SP-33	*Suction Filter Maintenance - In Line*	46
SP-34	*Suction Filter Maintenance - Head*	46
SP-35	*Hot Gas Bypass Adjustment*	47
SP-36	*Motor Insulation Resistance Test*	48
SP-37	*Refrigerant Leak Test*	49

DUNHAM-BUSH RESERVES THE RIGHT TO MAKE CHANGES IN SPECIFICATIONS AND DESIGN WITHOUT NOTICE.

REFERENCES *

TITLE	FORM NO.
PCX-H Hermetic Type Packaged Chillers 120 Thru 400 Tons	6039
PCX-O Open Type Packaged Chillers 120 Thru 350 Tons	6041
PCX-O Open Type Packaged Chillers 400 Thru 750 Tons	6041-2
PCX-OHR Open Type Heat Reclaim Packaged Chillers 85 Thru 330 Tons	6058
DBX Compressor Service Manual	6136
PCX Hermetic Packaged Chiller Templates	6239-1 Thru 6
PCX-O Open Type Packaged Chiller Templates	6241-1 Thru 8
Motor Starter Specifications	6236
Receiving Inspection Report	9214
Request for Authorized Start-Up Representative	9180
Daily Operating Log	9198
Monthly Operating Log	9198-1

*THESE FORMS ARE AVAILABLE AT THE LOCAL DUNHAM-BUSH SALES REPRESENTATIVE'S OFFICE.

INTRODUCTION

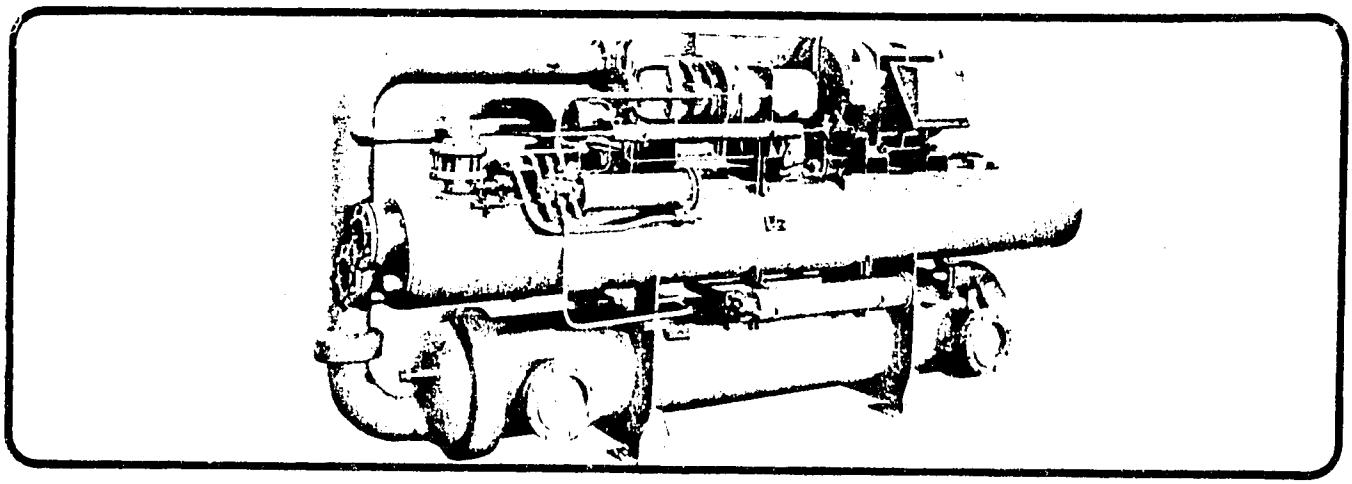

Each unit was designed to meet specific criteria and must be operated within conditions specified when ordered.

Fluorocarbon refrigerant must be handled with caution and release to the atmosphere should be minimized. Instructions for charging and retrieving refrigerant from these units can be found in the maintenance section of this manual.

These instructions and the drawings supplied with the PCX Unit must be followed carefully to insure proper installation, operation, and maintenance.

This manual is written and illustrated for a single PCX Unit installation. For instructions concerning a multiple unit installation, consult Dunham-Bush, Inc.

WARNING

Valves or connections which can cause loss of the factory installed refrigerant charge and lubricating oil charges shall not be opened under any conditions. The system shall not be dismantled or opened during installation except under the supervision of a Dunham-Bush, Inc., Authorized Service Representative.

The PCX Unit shall NOT be started following installation except under the direct supervision of a Dunham-Bush, Inc., Authorized Service Representative.

Warning tags attached to the unit should not be removed either prior to or after installation.

Compliance with the above is mandatory in order that the warranty shall not be jeopardized. All contacts with Dunham-Bush, Inc., regarding requests for information, service, or parts should be made to the nearest sales office.

DUNHAM-BUSH RESERVES THE RIGHT TO MAKE CHANGES IN SPECIFICATIONS AND DESIGN WITHOUT NOTICE.

I. GENERAL INFORMATION

A. SHIPPING

The unit is shipped with skids and lifting arms attached for ease in rigging. Refrigerant and oil systems are fully charged. Chiller and condenser water connections have covers to prevent contamination of the vessels. Check the unit nameplate to be sure the power supply meets the unit requirements. The wiring diagram number and type of refrigerant can also be found on the unit nameplate.

B. RECEIVING/INSPECTION

The unit should be inspected immediately, in the presence of the carrier's representative, for any evidence of damage during shipping. Any damage should be noted on the carrier's delivery receipt before it is signed. A damage claim should then be filed by the purchaser against the delivering carrier as all shipments are made at the purchaser's risk. The receiving inspection report (Form 9214), sent with the installation instructions, should also be filled out at this time and forwarded to the Dunham-Bush, Inc., National Service Department, West Hartford, CT. 06110.

C. RIGGING AND MOVING

Riggers and installers must use every precaution to prevent damage while moving the unit from the point of shipment to its permanent location. Pushing, pulling or climbing on any of the unit components or piping can easily create damage that will result in costly repairs of leaks and malfunctioning components. The only places it is safe to apply hoisting, jacking, pushing, or pulling forces are to shipping skids and lifting arms. Cables are to be attached only to the lifting arms, spreaders must be used with the lifting cables to prevent damage to the unit.

Skidding may be done directly on the shipping skids or on properly spaced rollers under the skids. Pushing and pulling should only be directed against the skids and lifting arms.

II. INSTALLATION

A. LOCATION

The location of the unit mav be any foundation or deck that is generally level within 1/8 of an inch and structurally capable of supporting the weight of the unit. A cleared area should be left around the unit to aid in operation, maintenance and removal of components. See references (packaged chiller templates) to obtain minimum clearance requirements.

B. MOUNTING

Resilient pads are provided for installation under the mounting legs. For critical installations, Dunham-Bush, Inc., can provide whatever type of vibration isolator the customer specifies. They must be installed and adjusted in accordance with the isolator manufacturer's instructions. The unit may be cemented or lagged to the foundation if desired.

C. LEVELING

When the unit is at its final location, it should be jacked or hoisted, by the lifting arms, the shipping skids removed and the unit let down on the isolator equipment supplied (felt pads or vibration isolators). It should then be checked for level longitudinally at the top center of the condenser shell and laterally across the compressor motor feet. Steel shims should be installed under the isolator pads, if necessary to level the unit.

D. UNMOUNTED ACCESSORIES

A chiller flow switch, which is shipped in a separate container accompanying the unit, must be installed in the external chilled water outlet piping. It must be located in a horizontal section on the pipe where there is at least five (5) pipe diameters on both sides of the flow switch before any other connections, as indicated in Fig. 1. The flow switch paddle must be adjusted to the size of pipe in which the paddle is installed, and the switch set to trip at approximately 50% of the design flow. Consult the wiring diagram accompanying the unit for the electrical connections to interlock the flow switch with the control panel.

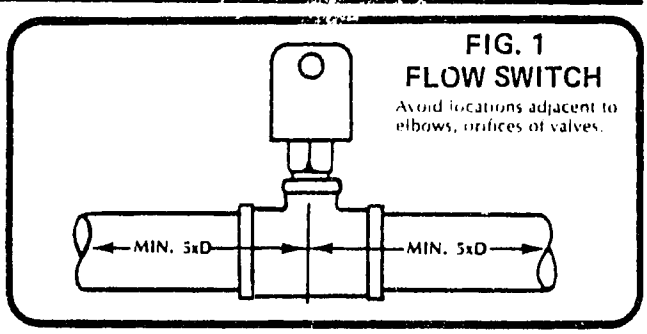

FIG. 1
FLOW SWITCH
Avoid locations adjacent to elbows, orifices or valves.

E. EXTERNAL CONNECTIONS

1. Water Connection

After the unit has been leveled, the external water piping to the chiller and condenser may be made up. Air vent valves should be installed at all high points to bleed the system of entrapped air. Drain valves or plugs should be installed at low points to gravity drain the system. The unit drain plugs for the chiller, condenser and oil cooler (if equipped) must be installed prior to filling the system. Insulation should be installed on all external piping to prevent sweating and if the chiller (vessel) and associated piping was not equipped with the optional factory insulation, it too must be insulated.

All external plumbing should have manual shut-off valves installed near the unit for ease in servicing and maintenance. Strainers should also be mounted in the piping before the unit to prevent dirt and other contaminants from entering and damaging the unit and its satellite equipment.

The external plumbing must be carefully located and adequately supported by pipe hangers to prevent twisting or bending stresses on the unit when the flanges or grooved pipe connections are bolted. It is recommended that flanged elbows be used at the connection to the condenser so that the external piping will not interfere with servicing of the condenser tubes. Flexible connections on water lines throughout the machinery room are recommended for chiller and condenser piping, where sound or vibration transmission may be a problem.

Following make up of the external plumbing, a check should be made for piping stresses at the PCX unit, as follows: Remove condenser and chiller connecting bolts. If any bolts are misaligned, adjust external piping or hangers to properly align the connections. If it is necessary to reshape and anneal the external piping, the inside of the piping must be cleaned of the resulting scale before reassembly. The piping should then be thoroughly flushed to remove all foreign material, connected to the unit, filled, vented and tested for leaks.

PCX units are designed for a fixed evaporator water flow, and means should be employed to assure a relatively constant flow at all loads.

E. EXTERNAL CONNECTIONS CONTINUED

2. Water Treatment

Most industrial water supplies contain dissolved or suspended materials which cause scale formation, corrosion, and propagate slime, algae, etc. It is strongly recommended that a water treatment specialist be consulted for additive systems to counteract or prevent the damages caused by these impurities.

Cooling towers and evaporative water coolers experience a constant loss of water due to evaporation. Since evaporation is a distillation process, an increasing concentration of suspended and dissolved impurities occurs. This increase of impurities can be greatly reduced by a bleed-off system which will constantly bleed off the contaminated water and replace it with fresh water through the sump float valve.

Chemical water treatment in addition to the bleed-off system will probably be necessary. The correct rate of water bleed-off and the proper chemical treatment should be determined by a specialist familiar with the local water characteristics. A daily check and periodic inspections should be made to be sure the correct bleed-off rate and chemical treatment is maintained. Do not underestimate the importance of daily logged readings of condensing pressure, water temperatures, oil cooler water (when supplied) and oil temperatures in determining the condition of the heat transfer surfaces, and the effectiveness of the water treatment.

NOTE: Consult manufacturer for information concerning design, installation and operation of the cooling tower or evaporative water cooler.

WARNING: Dunham-Bush, Inc., will not be liable for any damage or failure resulting from the physical or chemical properties of the condenser water used in this equipment.

NOTE: Local codes may require the relief valve piping piped away from the unit.

3. Electrical Connections

The unit is completely wired at the factory prior to delivery. The connections which must be made by the installer are listed below. Each circuit must have adequate control and protection devices incorporated in it in accordance with the National Electric Code and/or other applicable codes in the area in which the unit is installed. The voltage, frequency and phase must be in accordance with that shown on the unit nameplate, and within 1% voltage imbalance. Flexible conduit should be used where vibration may be a problem. All wiring must be in accordance with the wiring diagram furnished with the unit, the National Electrical Code and any local codes that may apply. Any deviations from the above requirements must have the prior approval of Dunham-Bush, Inc. Customer supplied starters for the compressor motor must be in compliance with the latest revision of Dunham-Bush, Inc., Engineering Specification No. ELC-ES-9 which is available from the local Dunham-Bush, Inc., sales representative's office under Form No. 6236 or as individually approved in writing by Dunham-Bush, Inc. A starter interconnection wiring diagram can be found in the Operation Section of this manual.

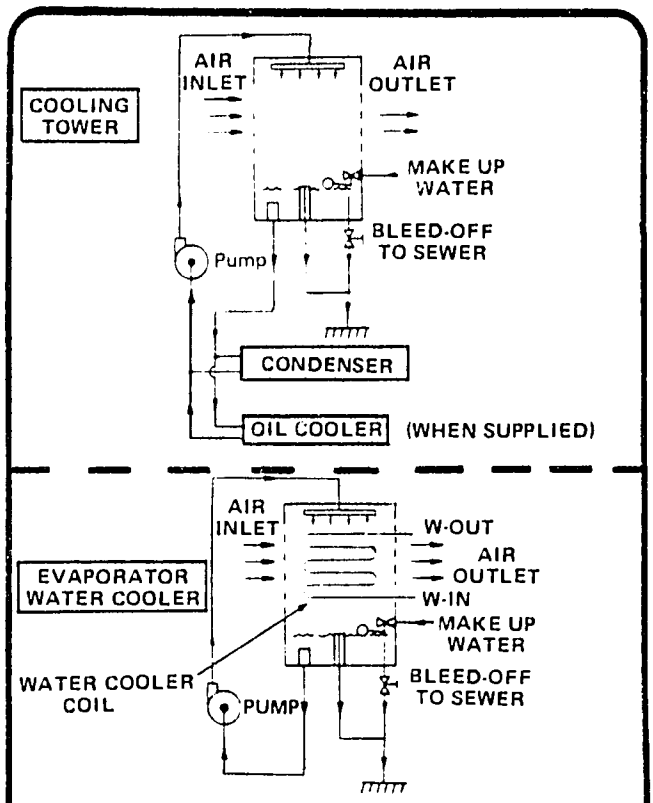

FIG. 2 TYPICAL BLEED-OFF SYSTEMS

The following external wiring is to be provided by the installer:

a. Power supply to compressor motor starter with circuit protection, and from starter to compressor motor.

b. Power supply to oil pump motor contactor or starter with circuit protection.

c. Chilled water pump auxiliary contacts to control panel.

d. Condenser water pump starter control circuit to control panel.

e. Compressor motor starter control circuit to control panel.

f. Compressor motor overload circuit to control panel.

g. Load limiter wiring from starter to control panel.

h. A properly sized control transformer or 120V/60 HZ./1PH power supply to control panel, with circuit protection.

i. Flow Switch to control panel.

4a. Mounting and Leveling

☐ Erected on foundation . . . in accordance with construction and electrical drawings supplied to the customer and requirements of this manual.

☐ Spring isolators or pads, installed, and the unit leveled . . . in accordance with isolator manufacturer's instructions and the requirements of this manual.

E. EXTERNAL CONNECTIONS CONTINUED

4b. Water Piping

- ☐ Condenser cooling water piping installed between condenser, pumps and cooling tower or well . . . as specified in this manual.
- ☐ Chilled water piping installed between chiller, pumps, and terminal equipment . . . as specified in this manual.
- ☐ Make-up and fill lines installed to cooling tower and chilled water system . . . and chemical treatment and bleed-off systems as needed.
- ☐ Thermometers, air vents, drain plugs and pressure gauges installed in chilled and condenser water inlet and outlet lines.
- ☐ Flow switch installed in outlet chilled water line and adjusted to a minimum of 50% flow.
- ☐ All water piping checked for strain . . . as specified in this manual.
- ☐ Water piping leak tested, flushed and vented, water strainers checked after flushing to be certain they are not clogged.
- ☐ Chiller and condenser water flow available from supply in sufficient quantity to meet unit design requirements. . . . and with adequate water treatment.

4c. Electrical Wiring

- ☐ Power supply available . . . with circuit protection and in accordance with the requirements on the unit nameplate and this manual.
- ☐ Wiring completed from power supply through circuit protection in accordance with the drawing supplied and the requirements of this manual.
- ☐ Wiring completed from power supply to circuit protection for oil pump motor in accordance with the wiring diagram and the requirements of this manual.
- ☐ Wiring completed from power supply through circuit protection to 115V control circuit in unit control panel (or through 115V transformer to control circuit) . . . in accordance with the drawing supplied and requirements of this manual.
- ☐ Wiring from power supply through circuit protection to satellite equipment and interlocks wired to control panel in accordance with drawing supplied and requirements of this manual.
- ☐ Phasing correct for direction of rotation of all motors except compressor and oil pump motors . . . phasing of compressor and oil pump motor will be checked by Dunham-Bush, Inc. start-up representative.

4d. Conditions Required for Start-Up

- ☐ Load must be available for operation and testing . . . a refrigeration load adequate to cause normal operation of the unit MUST BE AVAILABLE.
- ☐ Competent representatives of the Allied Trades (electrical contractor, steam fitters, controls contractor, etc.) involved in the installation of this chiller must be at job site to correlate their portion of the work in starting, testing, and balancing this chiller.

F. REQUEST FOR START-UP REPRESENTATIVE

After the installation has been completed and checked, Form 9180 must be filled out and sent to the National Service Department of Dunham-Bush, Inc. This Form is a request for the services of a Dunham-Bush, Inc. authorized start-up representative to perform the initial start-up of the Dunham-Bush chiller. The purchaser will have competent service, and operating personnel in attendance to assist in the work involved, and also to be trained in the service and maintenance of this chiller. (During the warranty period the manufacturer is responsible for parts only upon proof of defective workmanship or manufacture).

Following receipt of this signed form, a representative will be sent to the customer. He will inspect the installation to determine whether it meets Dunham-Bush, Inc. requirements, perform the initial start-up of the installation to determine whether it is in satisfactory operating condition, and instruct the specified customer personnel in its operation and maintenance for the length of time specified in the purchase contract.

NOTE:

Sump oil heaters should be energized a minimum of 24 hours prior to arrival of start-up representative. On hermetic compressors, the motor housing heaters should also be energized a minimum of 24 hours and the oil sump temperature must be at a minimum of 100°F (38°C) prior to arrival of start-up representative. This will insure that the oil is warm enough to vaporize any refrigerant in the oil and is in the normal operating temperature range.

III. OPERATION

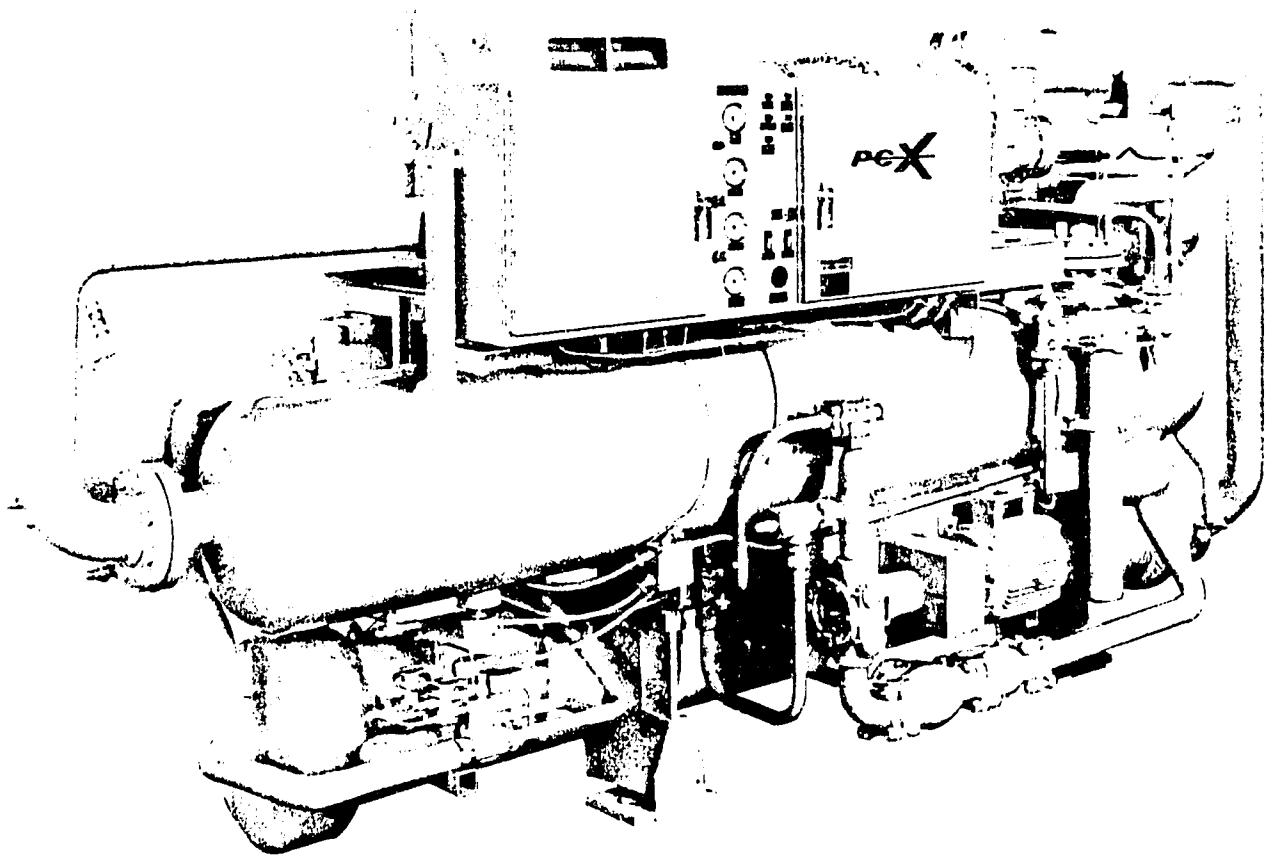

IPCX-O DIRECT DRIVE PACKAGED CHILLER

A. GENERAL

WARNING: The compressor and oil pump are NOT to be started initially except under the direct supervision of an Authorized Dunham-Bush, Inc. Start-Up Representative. Be sure that oil sump heaters and motor housing heaters (if the unit is hermetic) are turned on for a minimum of twenty-four hours prior to initial start-up. Couplings and motors have been aligned with the compressor at the factory. During shipment they may become misaligned. Alignment and motor pinning at initial start-up must be done by a Dunham-Bush, Inc. Start-Up Representative.

While this unit is greatly simplified and incorporates features to protect it against damage, it does represent a considerable investment and deserves the attention and care normally given to any fine piece of equipment. Reliable and economical operation will be achieved if the instructions in this manual are followed.

CAUTION: Operate this equipment in accordance with the instructions of this manual. DO NOT alter control settings to other than those specified on the wiring diagram accompanying the unit.

This equipment has been tested prior to shipment and found satisfactory for the conditions under which it was sold. Operation in excess of these conditions will subject this equipment to stresses for which it was not designed. Failure to heed this warning may result in injury to operating personnel and may jeopardize the warranty under which the equipment was sold.

III. OPERATION

B. SYSTEMS

1. REFRIGERANT SYSTEM

The PCX packaged chiller may have either a direct expansion or flooded chiller depending on the capacity of the unit. A simple flow diagram as depicted in Fig. 3 and 4 indicates the principle parts of a basic refrigeration

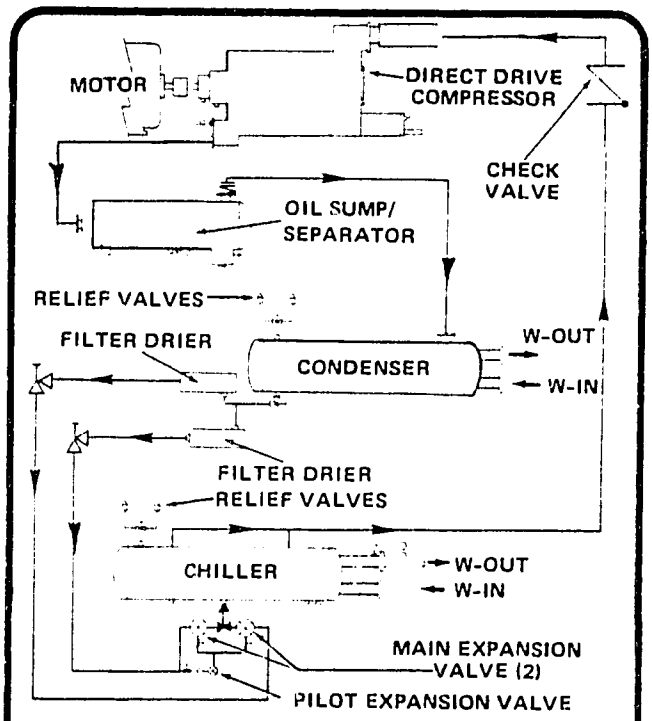

FIG. 3 TYPICAL FLOODED PCX-O

cycle. The compressor takes the refrigerant gas at low density and compresses it to a higher density. The temperature of the refrigerant gas is also increased. The dense refrigerant gas flows to the condenser where heat is removed, causing a change in the state of the refrigerant from a gas to a liquid. The refrigerant in a liquid state then flows through the filter/drier, through an expansion valve which meters the refrigerant into the evaporator chiller. There it changes its state back to a gas as it absorbs heat and evaporates. It is during this change of state that the refrigerant will extract heat from the medium being cooled. This low density cool gas then flows to the compressor where the cycle is repeated.

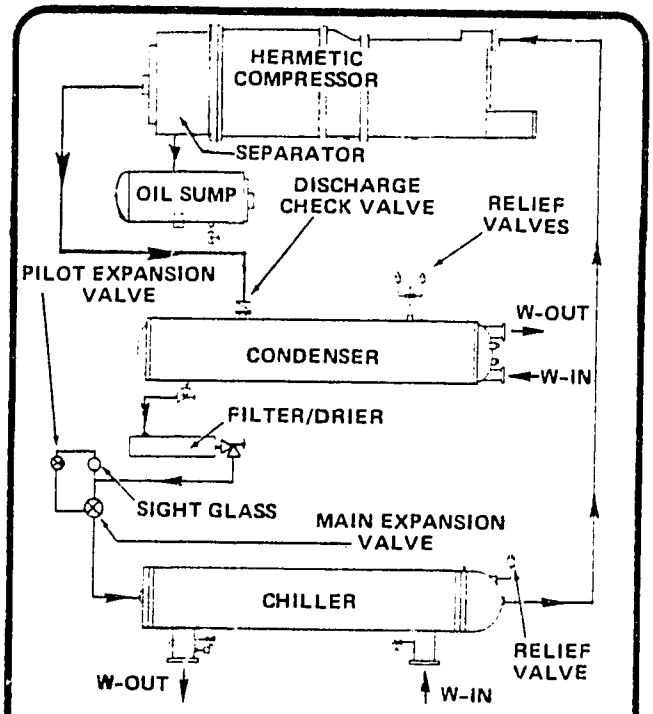

FIG. 4 TYPICAL DIRECT EXPANSION PCX-H

Operation of specific components within the refrigerant system may be found under System Components Section.

2. WATER SYSTEMS

The condenser water system on a PCX unit is an open end system and the water in the system is used to condense hot refrigerant gas into a liquid. Water is pumped through the tubes of the condenser where it picks up heat condensing the refrigerant. It then flows to a water tower, evaporative water cooler, or other cooling service, where the heat is dissipated to the atmosphere. Cooled water is picked up here and is pumped to the condenser to absorb more heat from the refrigerant.

Some units have water cooled oil coolers. The water used to cool the oil is either diverted from the input of the condenser to the oil cooler or is supplied from an exterior source. A thermally actuated valve monitors the leaving oil temperature and modulates the water flow through the cooler.

The condenser for heat recovery units is constructed with two entirely separate water circuits. Hot gas from the compressor is discharged to the condenser where the heat is absorbed by either one of the water circuits or both simultaneously, depending on the building requirements. The heat reclaim condenser features the split system to prevent contamination of the heating circuit, associated piping, and heating coils from the cooling tower water which may absorb dirt, chemicals or corrosives.

The chilled water system is a closed system and the flow pattern varies for a flooded system versus a direct expansion system. Both systems use shell and tube heat exchangers, but in a flooded system the water is pumped through the tubes while a direct expansion system, water is pumped through the shell. As the chilled water leaves from either of these systems it is monitored by electronic arrangement which controls the operation of the unit. The chilled water then flows to the cooling coils where it picks up heat from the space or item being cooled. The water is then circulated back to the pump and chiller.

Operation of specific components within the refrigerant system may be found under the Component Operation Section.

3. LUBRICATING SYSTEM

The oil in a PCX system is used to lubricate the compressor and is additionally used to dissipate heat generated within the compressor, provide a seal between the male and female rotors during compression of the refrigerant, as a hydraulic medium for capacity control, and to provide quite operation.

There are a number of variations of lubricating systems. The choice of each system is dependent upon the type of unit and its purpose. Operation of these systems can be found in the Component Operation Section.

III. OPERATION

C. COMPONENT OPERATION

1. COMPRESSOR/MOTOR ASSEMBLY

The PCX-H compressor motor is hermetically sealed and is directly connected at the compressor outlet so that both the compressed refrigerant and lubricating oil cool the motor windings. Temperature sensors are embedded in the motor windings to monitor the temperature for the motor protection system. The PCX-O compressor motor is air cooled and is connected to the compressor by a flexible coupling.

The compressor used on the Dunham-Bush, Inc., packaged chiller is a positive displacement, helical-axial flow compressor designed for use with high pressure refrigerants. Unlike centrifugal compressors, no purge system is needed.

For clarity reasons, the following account of the PCX compressor operation will be limited to one lobe on the male rotor and one interlobe space of the female rotor. In actual operation, as the rotors revolve, all of the male lobes and female interlobe spaces interact similarly with resulting uniform, non-pulsating gas flow.

1a. Suction Phase

As a lobe of the male rotor begins to unmesh from an interlobe space in the female rotor, a void is created and gas is drawn in through the inlet port - Fig. 5 - as the rotors continue to turn the interlobe space increases in size - Fig. 6 - and gas flows continuously

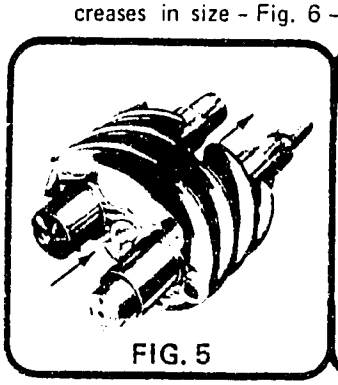

FIG. 5

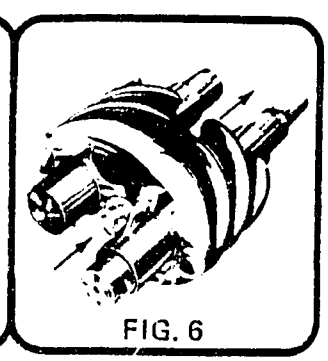

FIG. 6

into the compressor. Just prior to the point at which the interlobe space leaves the inlet port, the entire length of the interlobe space is completely filled with drawn in gas - Fig. 7.

1b. Compression Phase

As rotation continues, the gas in the interlobe space is carried circumferentially around the compressor housing. Further rotation meshes a male lobe with the interlobe space on the suction end and squeezes (compresses) the gas in the direction of the discharge port. Thus the occupied volume of the trapped gas within

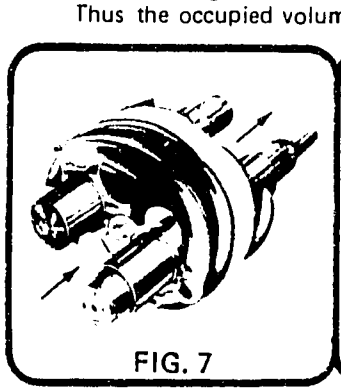

FIG. 7

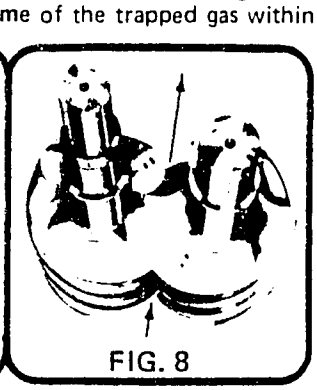

FIG. 8

the interlobe space is decreased and the gas pressure consequently increased.

1c. Discharge Phase

At a point determined by the designed "built-in" compressor ratio, the discharge port is uncovered and the compressed gas is discharged by further meshing of the lobe and interlobe space - Fig. 8. While the meshing point of a pair of lobes is moving axially, the next charge is being drawn into the unmeshed portion and the working phases of the compressor cycle are repeated.

1d. Capacity Control

Compressor vapor displacement is controlled to balance the flow rate of liquid refrigerant entering the evaporator with the changing cooling demand.

The capacity control valve is located in the rotor housing as shown in Fig. 9 and 10. The movement

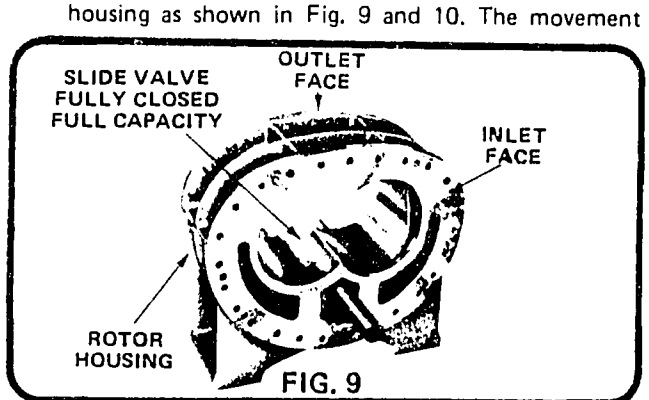

FIG. 9

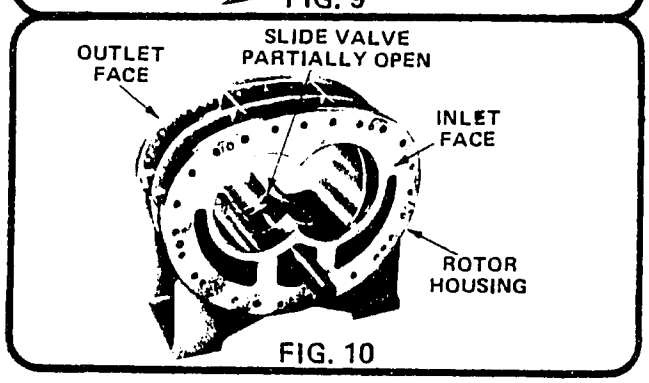

FIG. 10

of this valve along the axes of the rotors is programmed by a solid state, temperature initiated, hydraulically actuated control arrangement. When the compressor is fully loaded the slide valve is in the closed position against the valve stop as shown in Fig. 9, and all gas flows through the rotor housing as described previously. When the compressor starts to unload, as shown in Fig. 10, the compressor slide valve will move away from the valve stop. The movement of the slide valve creates an opening in the bottom of the rotor housing through which suction gas can pass back to the inlet port. As no significant amount of work has been done on the returned suction gas, no appreciable losses have been incurred. Reduced capacity is obtained from the gas remaining in the interlobe, which is compressed in the ordinary manner. In principle, as the opening in the rotor housing is enlarged the compressor displacement is reduced. Optional capacity control system information can be found under Optional Sub-System Operation.

III. OPERATION

C. COMPONENT OPERATION CONTINUED

CAPACITY CONTROL

1e. The temperature load controller (TLC) supplies power to the load solenoid valve (LSV) and unload solenoid valve (USV) to control the position of the compressor slide valve piston. Control is achieved electronically by a monitoring leaving chilled water temperature. The TLC will always act to meet a specific load demand and stabilize unit operation.

LEGEND: LTV - Load Throttling Valve; UTV - Unload Throttling Valve; SOV - Shut Off Valve; FUSV - Fast Unload Solenoid Valve; USV - Unload Solenoid Valve; LSV - Load Solenoid Valve; Refrigerant Gas; Refrigerant Oil

COMPRESSOR LOADING

- **LOADING**
  When energized, the load solenoid valve (LSV) opens and discharge pressure pushes the slide valve towards load, forcing oil out of the cylinder into the suction housing. Piston speed is controlled by an adjustable restrictor valve located in the oil line.

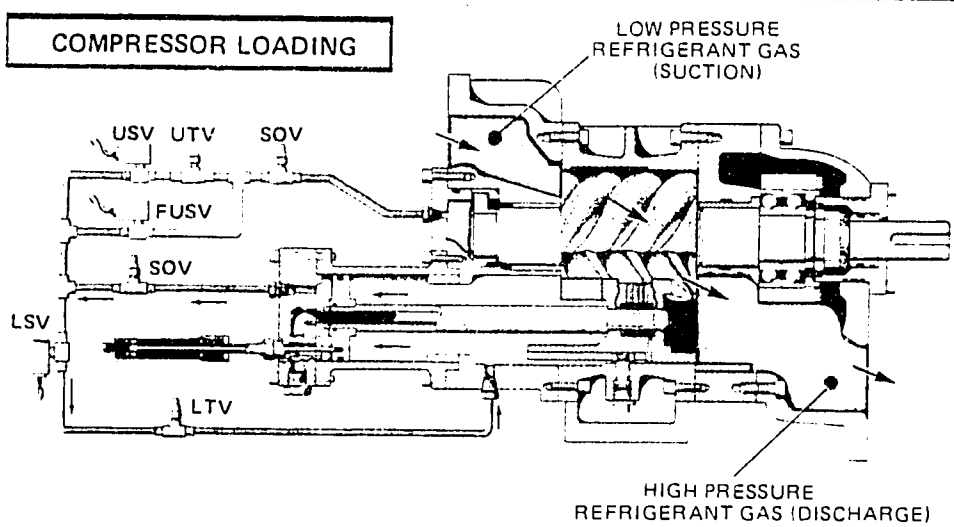

COMPRESSOR UNLOADING

- **UNLOADING**
  When energized, the unload solenoid valve (USV) opens. The combination of discharge plus oil pressure on the slide valve piston will move the slide valve toward the unload position. Piston speed is controlled by an adjustable restrictor valve located in the oil line.

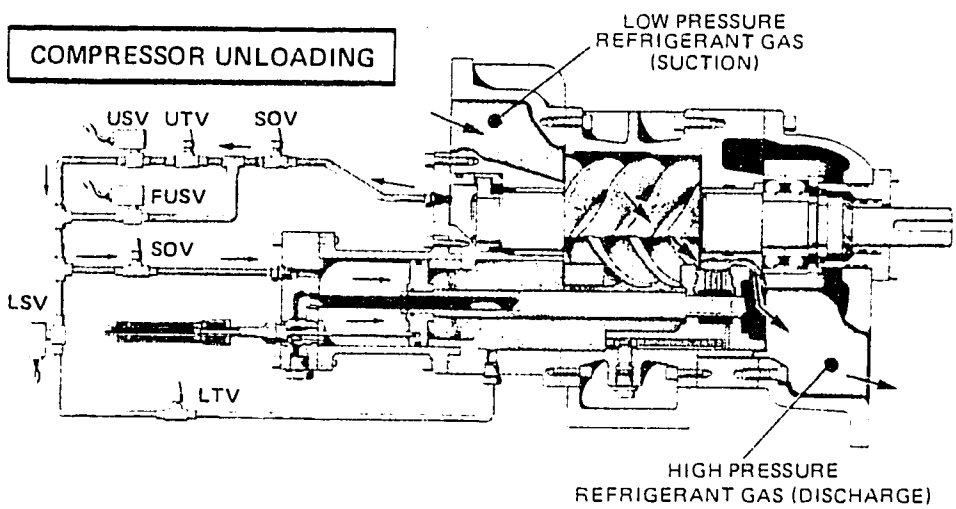

COMPRESSOR PART LOAD

- **PART LOAD**
  The unit will remain in the part load position as long as the leaving chilled water temperature remains at the desired temperature. Both load and unload solenoid valves will be closed and the piston will be stationary at the part load position.

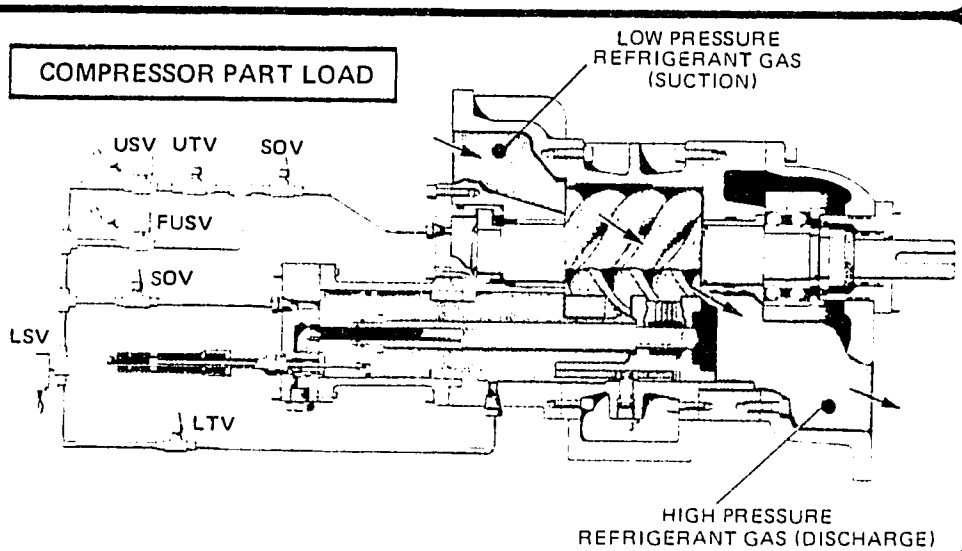

2. LUBRICATION SYSTEM OPERATION

2a. Oil Separation and Collection

Prior to entering the condenser, the discharge refrigerant vapor and the oil are mechanically separated. The oil/vapor mixture is discharged from the compressor to a separator, or combination sump/separator (depending upon the unit model). A liquid injection arrangement controlling discharge temperature at the compressor insures the proper conditions necessary for efficient oil separation.

- **Hermetic Units** - Units featuring a hermetic compressor have an oil separator mounted at the compressor discharge and the oil drains into a separate sump. The separator is constructed with a knitted mesh wire wound on a perforated metal mandrel. The oil droplets collect on the wire mesh and are drained into the oil sump. The discharge refrigerant vapor is piped from the separator directly to the condenser.

- **Open Drive Units** - Units featuring a direct drive compressor incorporate a combination oil/sump separator in a single vessel. The upper portion of the shell contains mesh beds which serve to remove the oil from the discharge vapor. The bottom portion of the shell acts as a sump for the collected oil. The discharge refrigerant vapor is piped from the upper portion of the sump/separator to the condenser.

- **Oil Sump Heaters** - Electric resistance heaters are located in the lower portion of the sump vessel and serve to vaporize excess refrigerant that may have diluted the oil during shut-down, and heat the oil to a suitable temperature for start-up. Normally the heaters must be energized a minimum of 24 hours and the oil sump temperature must be at a minimum of 100°F (38°C) prior to start-up of the unit.

- **Oil Sump Sight Glasses** - Sight glasses are provided in the sump vessel to monitor the oil level. When the unit is shut-down and the oil is at design discharge temperature, the normal oil level is 1/2 to 1/3 visible in the (top) sight glass.

2b. Oil Pumps

A gear type oil pump is used to provide oil at sufficient pressure to lubricate the compressor and actuate the capacity control slide valve. The pump may be either hermetic or open drive, depending on the unit application.

- **Hermetic Oil Pump** - The hermetic oil pump and motor are located within the oil sump vessel utilizing the oil to cool the motor windings. Thermal switches imbedded in the motor windings are interlocked with the control panel and serve to protect the motor from overheating. To avoid circulation of solid contaminants, a 100 mesh strainer is located at the pump suction. A pressure relief valve located on the discharge side of the pump inside the vessel, is factory set and sealed for 53 psid (365 kPa) relief pressure.

- **Open Drive Oil Pump** - Located exterior of the oil sump, the open pump is coupled to a motor. To avoid circulation of solid contaminants, a 100 mesh strainer is located at the pump suction. Service valves and a check valve are provided for ease of maintenance.

2c. Oil Systems

There are two basic types of oil system piping arrangements used on packaged chillers that serve the compressor's lubrication and hydraulic purposes; a partially pumped system and a fully pumped system. Typical lubrication systems are shown in Fig. 11 thru 13.

NOTE: Net oil pressure is the oil pressure supplied to the bearings minus the discharge pressure at the compressor.

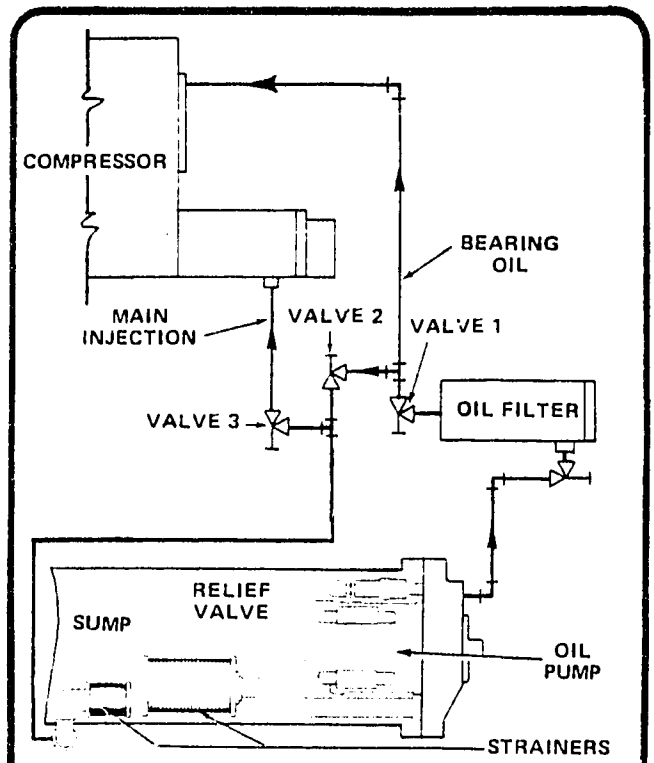

FIG. 11 - PARTIALLY PUMPED WITH HERMETIC OIL PUMP

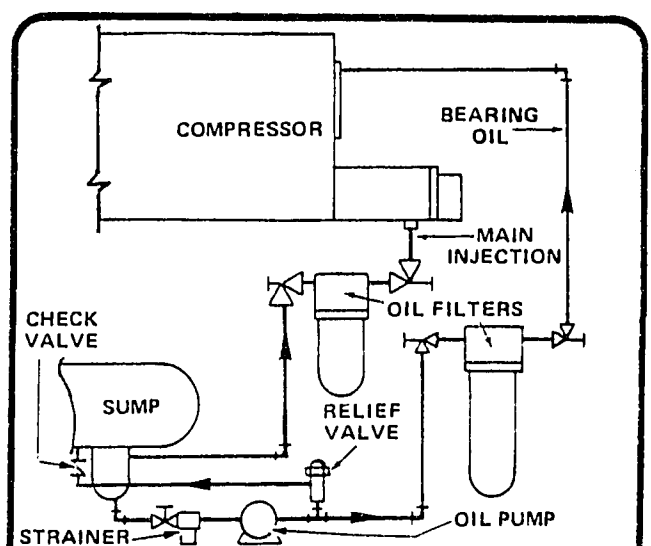

FIG. 12 - PARTIALLY PUMPED OIL SYSTEM WITH OPEN OIL PUMP

- **Partially Pumped Oil System** - In a partially pumped lubrication system, strained oil is pumped through an oil filter to a three valve manifold. Valve 'one' and valve 'three' as shown in Fig. 11 are strictly service valves and remain fully open. Valve #2 is used to adjust the required net oil pressure.

- **Fully Pumped Oil System** - Both injection and bearing oil are pumped in the fully pumped oil system. Net oil pressure is maintained by a regulating valve mounted at the oil pump discharge. The regulating valve may be adjusted to obtain the required net oil pressure.

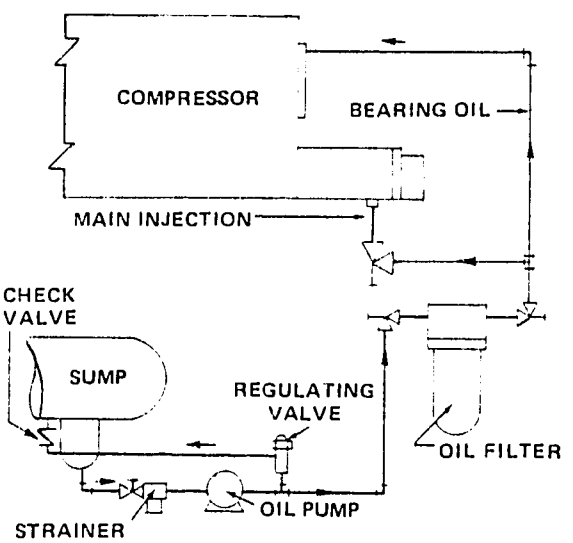

FIG. 13 FULLY PUMPED OIL SYSTEM

2d. Oil Filters

The filters used in the oil system consist of a shell with replaceable 10 micron pleated paper element(s). The normal operating pressure drop across the filter is 1 thru 2 PSID (6.9 thru 13.8 kPa) with a new element. The maximum allowable pressure drop across the filter is 6 PSID (41.4 kPa). Service valves are provided for easy maintenance.

2e. Evaporator Oil Return System (Flooded Chiller, Low Temperature Direct Expansion Chiller)

Powered by discharge gas, a jet pump eductor is used to remove residual oil that accumulates in the chiller. This device is used on all flooded chillers, and direct expansion chillers with low suction temperature applications.

- **Flooded Chiller** - The flooded chiller has 4 to 5 valve taps in the chiller shell which are connected to the suction of the jet pump. The bottom tap should be opened partially for pulldown and overload conditions, when the liquid level is depressed. For high chiller liquid levels, when the load is low, the top tap, generally, should be closed unless field conditions require otherwise. The remaining valve taps permit oil pick-up as the level varies. These taps should be open somewhat, and the one that is closest to the normal liquid level, when operating at the design condenser leaving water temperature, should be wide open.

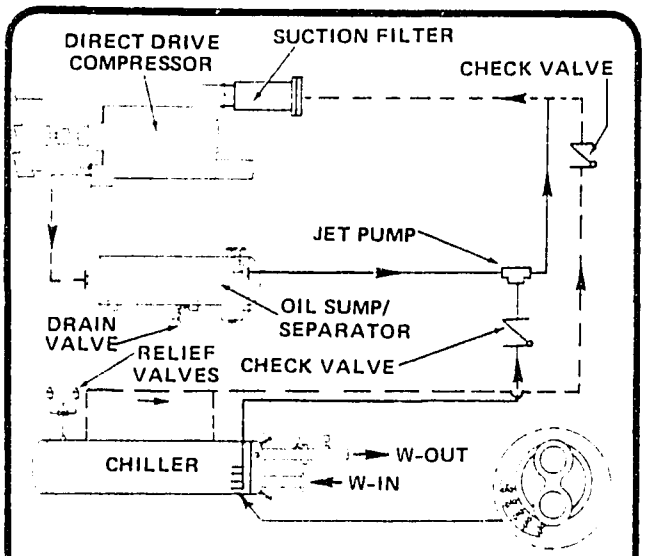

FIG. 14 JET PUMP (FLOODED CHILLER)

NOTE: Avoid having valves wide open that draw only gas from the chiller.

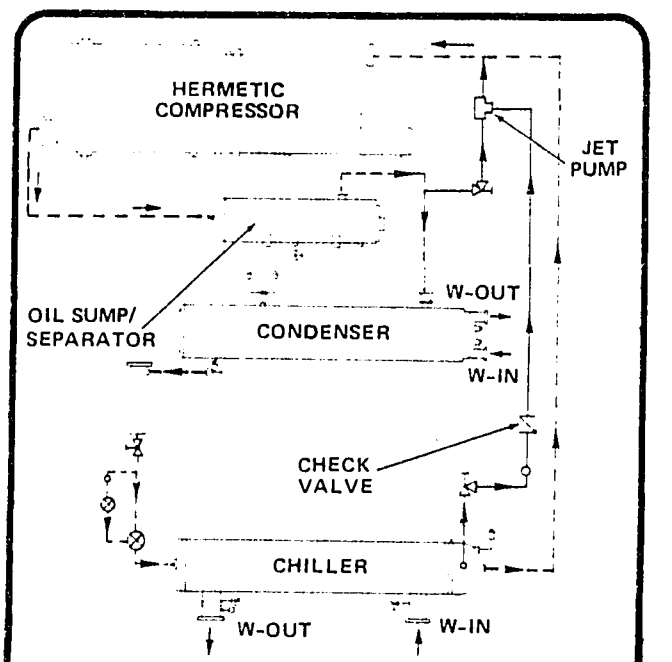

FIG. 15 JET PUMP DIRECT EXPANSION

- **Direct Expansion Chiller** - The direct expansion chiller has one valve tap in the chiller suction head which is connected to the suction of the jet pump. Both the valve at the chiller head and the valve at the jet pump remain fully open.

3. OIL COOLING SYSTEM OPERATION

Liquid injection or a water cooled oil cooler is supplied for oil cooling.

3a. Liquid Injection

Liquid injection is used to cool the oil and refrigerant vapor, and is controlled within the compressor during

compression to insure efficient oil separation, minimize refrigerant solubility in the oil, and maximize lubrication properties. By controlling oil temperature on hermetic units, the liquid injection system, additionally, facilitates the dissipation of heat from the motor windings.

- **Normal Operation** - This system is designed to hold the oil temperature above 135°F (57.2°C) to minimize excessive oil dilution. This is accomplished by a thermostat sensing discharge temperature. The liquid injection solenoid will de-energize when the discharge temperature reaches the design cut-out setting for the thermostat, as noted on the unit wiring diagram accompanying the unit. The solenoid will cycle to maintain 140°F ± 5°F (60°C) oil temperature, minimizing dissolved refrigerant in the oil.

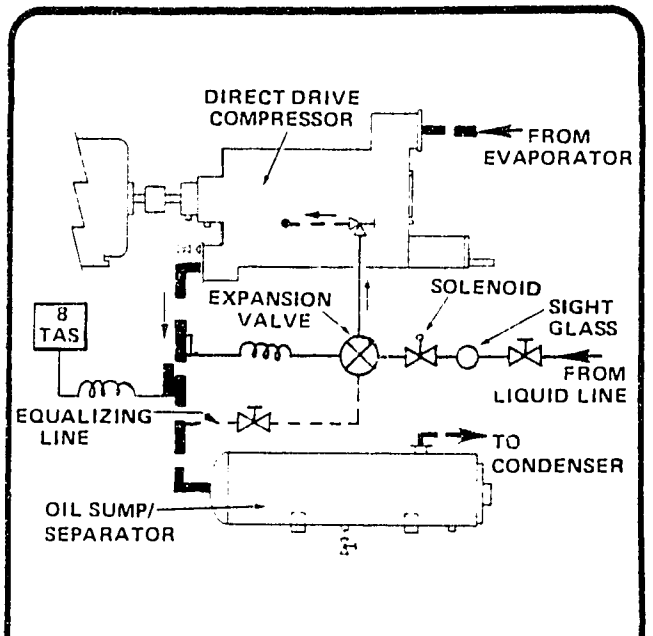

FIG. 16 LIQUID INJECTION

To insure proper oil separation by maintaining discharge superheat under all load conditions, the thermo-expansion valve is factory pre-set to maintain a minimum 40° thru 50F° (22.2° thru 27.8C°) discharge superheat at 100% load. On any given unit, the controls should be set to maintain a minimum of 35F° (19.4C°) superheat at any load.

- **Heat Reclaim/R-12 Units** - The liquid injection assembly for heat reclaim and R-12 units operate in the same manner except that the liquid injection throttling device is a temperature operated valve that will react to discharge temperature only rather than discharge superheat.

3b. Seal Oil Cooling (Open Drive Units)

Seal oil cooling is provided to control the viscosity and temperature of the oil supplied to the shaft seal cavity under all operating conditions. The temperature of the oil entering the seal cavity is maintained at 115°F ± 5°F (46°C ± 2.8°C). The major components of the seal oil cooling system consist of a liquid line solenoid, a temperature operated expansion valve, a direct expansion heat exchanger and a safety thermostat. A check valve is provided upstream of the seal cavity to maintain a full oil level in the cavity, preventing refrigerant leakage through the seal during shut-down.

- **Normal Operation** - The seal oil cooler liquid line solenoid energizes on start-up allowing liquid refrigerant to enter the heat exchanger. The safety thermostat is electrically bypassed during start-up by a timer until conditions stabilize for normal operation. The expansion valve modulates refrigerant flow entering the heat exchanger by responding quickly to temperature changes in the oil entering the seal cavity.

3c. Water Cooled Oil Coolers (Low Temperature or Special Applications)

Constructed with an externally finned tube bundle mounted in a steel shell, the heat exchanger provides the required oil cooling capacity under all operating conditions. A thermostatically actuated two way valve regulates the water flow through the tubes, as the sensing element monitors the leaving oil temperature. The baffle arrangement in the shell side channels the oil flow for a more effective heat transfer.

4. HIGH/LOW SIDE COMPONENT OPERATION

4a. Discharge Check Valve

To prevent migration of liquid refrigerant from the condenser into the separator during shutdown, a discharge check valve is used. Located between the separator and condenser, the check valve also prevents excessive spin-down of the compressor, and allows the unit to be pumped down for servicing.

4b. Condenser

The condenser is a 'shell and tube' heat exchanger which serves to condense the discharge refrigerant vapor by removing heat. Water is circulated through the tubes absorbing heat from the discharge vapor condensing in the shell side of the externally finned copper tube bundle. The water flow rate or temper-

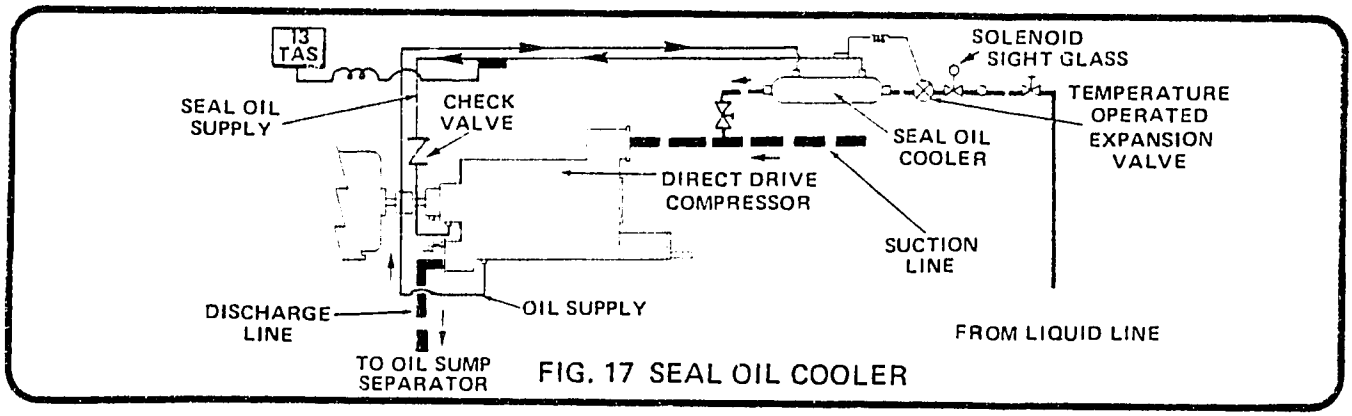

FIG. 17 SEAL OIL COOLER

C. COMPONENT OPERATION CONTINUED

ature will have a significant effect on refrigerant condensing pressures under all operating conditions.

Dual refrigerant relief valves are mounted on the condenser vessel serving as a protection device.

- **Heat Reclaim Condenser** - As heat reclaim applications are specialized, the most economical operation must be evaluated for each job. Generally, when the heat reclaim water circuit is operating, the condensing pressure elevates because of a high entering water temperature, resulting in a higher kilowatt draw. When or if the tower water should operate during the heat reclaim cycle depends upon the heating and cooling load characteristics, and the percentage of heat rejected for heat reclaim.

4c. Filter Drier

The filter/drier is composed of a strainer and replaceable dessicant cartridges which remove contaminants, acid, and moisture from the refrigerant. A shut-off valve is at the outlet end of the filter/drier.

4d. Throttling

Throttling liquid refrigerant serves to regulate the refrigerant flow into the chiller while maintaining the required evaporating temperature. Throttling is accomplished by a multiple valve arrangement. The pilot thermo valve is mounted in a branch liquid line and is used in conjunction with the pilot operated solenoid (P.O.S.) thermal expansion valve which is located in the main liquid line.

- **Pilot Thermo Valve** - The pilot thermo valve meters a branch refrigerant liquid line while sensing either leaving water temperature or suction temperature, and serves to supply a pilot signal to the P.O.S. valve.

- **Pilot Operated Solenoid Valve** - The P.O.S. valve positions according to the signal pilot supplied from the pilot thermo valve. During shutdown the solenoid valve closes the pilot line allowing the valve to close. A manual opening stem is provided for service purposes and must be fully counterclockwise for normal operation.

4e. Chillers

Designed for a fixed flow rate, the "shell and tube" heat exchanger transfers heat from the medium being cooled to the refrigerant, causing the refrigerant to vaporize. The two types of chillers are flooded and direct expansion. Both types have pressure taps at the water inlet and outlet connections, a bulbwell for the water freeze-up thermostat, and a temperature load control sensor.

- **Flooded** - Flooded chillers have liquid refrigerant flooding the lower portion of the shell with the medium being cooled flowing through the tubes. The tubes are externally finned so that the refrigerant will have a large surface area to extract heat from the medium being cooled. Also supplied on the flooded chiller is a dual relief valve to serve as a protection device.

- **Direct Expansion** - The refrigerant enters the chiller through a distributor where it is directed into the tubes (the evaporating refrigerant is at a rate depending upon the cooling load). The tubes are of the patented Inner-Fin® extended surface design which improves heat transfer while minimizing refrigerant pressure drop, permitting a compact and efficient chiller design. The refrigerant vapor passes through an effective filter built into the suction head of the chiller (for additional system protection). The chiller is provided with a single relief valve to protect it from refrigerant over pressure.

4f. Suction Check Valve

Located in the piping between the compressor and the chiller, they are used to prevent excessive "spin-down", equalization of pressure between the compressor and chiller, and to prevent migration of oil into the chiller.

4g. Suction Filter

- **Flooded Units** - Units with a flooded chiller have a 10 micron suction filter mounted on the compressor at the compressor inlet.

- **Direct Expansion Units** - Units with a direct expansion chiller have a dacron felt filter located in the suction head of the chiller.

D. OPTIONAL SUB-SYSTEM OPERATION

1. XTRATHERM VAPOR INJECTION SYSTEM

The vapor injection system is used to provide additional subcooling to the liquid refrigerant supplied to the evaporator for increased refrigeration effect and system capacity. Its main components are a subcooler, subcooler thermo-expansion valve, evaporator pressure regulator, check valve, solenoid valve, vapor injection filter, oil feed valve, dual feed lines to the pilot valve of the main thermo-expansion valve and a minimum load limit switch.

A reed switch is located on the slide valve indicator at approximately 65% of full load. It may be adjusted between 40% and 75% to suit job conditions. The switch is used to control the solenoid which shuts down the vapor injection system on the off cycle or whenever the system becomes ineffective. When the capacity of the compressor reaches the load at which the reed switch is set, the solenoid will open and a small portion of the liquid refrigerant is diverted through the expansion valve to the subcooler. This refrigerant evaporates and in the process absorbs some of the heat of the liquid refrigerant flowing through the subcooler to the evaporator. The evaporator pressure regulator is used to control the pressure leaving the subcooler, which keeps the subcooling liquid temperature relatively constant.

2. HOT GAS BYPASS – UNLOADED START

Hot gas bypass unloaded start is accomplished by diverting gas from the compressor discharge port through a solenoid valve to the compressor suction port. The bypass line is open at start-up and the solenoid valve is used to close it. The purpose for unloading is that the compressor is designed to start under a low load (torque) condition, such as when the low

D. OPTIONAL SUB-SYSTEM OPERATION CONT.

side and high side pressures are equal (balance). The equal pressures allow the compressor and motor to reach operating RPM before the solenoid closes and compression starts. The motor therefore draws fewer inrush amps. In the case of open compressor units, unloaded start may allow use of a smaller horsepower motor.

3. HOT GAS BYPASS CAPACITY CONTROL

Hot gas bypass capacity control is used to feed hot gas directly into the chiller when the compressor's load falls to 10% or less. When this occurs, a solenoid valve in the capacity control line is energized by a reed switch in the slide valve indicator. The introduction of hot gas provides a stable refrigerant flow and keeps the machine from short cycling under low load conditions.

4. REED SWITCH

The reed switching assembly is used in conjunction with a flip-pac relay which controls various system components at different percent slide valve positions. Adjustments may be required upon installation to balance the unit performance with load characteristics.

- **High/Low Limit Switches** - These serve to limit slide valve positioning from extending beyond the range of application. The low limit switch is adjusted correctly when the differential temperature across the chiller is 1F° to 2F° (.56C° to 1.12C°). The high limit switch is factory set and should be adjusted only by an Authorized Dunham-Bush serviceman.
- **Hot Gas Capacity Control Limit Switch** - (If applicable) is used in conjunction with the low limit switch.
- **Large TX Valve Limit Switch** - (If applicable) Refer to the specific unit wiring diagram for correct positioning.

For any additional information, refer to the specific unit wiring diagram or to Dunham-Bush Service Bulletin No. SR109A.

E. TYPICAL PIPING SCHEMATICS

The piping schematics which appear on the next three pages are typical only. These schematics depict control systems and refrigerant and oil flow through the unit to furnish you with an understanding of the screw compressor packaged chiller.

Shown below are the symbols, codes and items with their descriptions which appear on the piping schematic.

TEMPERATURE AND PRESSURE CONTROL

CODE	DESCRIPTION
2TAS	Freeze Up Thermostat
7TAS	Low Refrigerant Temp. Thermostat
8TAS	Low Discharge Temp. Thermostat
12TAS	Oil Temperature Thermostat
13TAS	Seal Oil Temperature Thermostat
1PS	Hi-Low Refrigerant Pressure Safety Sw.
2PS	Low Refrigerant Pressure Unload Sw.
3PS	Low Oil Pressure Safety Sw.

PIPING SYMBOLS

SYMBOL	DESCRIPTION	SYMBOL	DESCRIPTION
	Refrigerant		Hand Valve
	Refrigerant & Oil		Hand Angle Valve
	Oil		Solenoid Valve
	Control		Check Valve
	Remote Bulb Capiliary Tubing		Sight Glass
	Unloaded Start		Expansion Valve
	Hot Gas Bypass		Pilot Expansion Valve
	Relief Valve		

COMPONENTS

ITEM	DESCRIPTION	ITEM	DESCRIPTION
1	Refrigerant Relief Valve, Chiller	17	Compressor Oil Pressure Balancing Valve
2	Refrigerant Relief Valve, Condenser	18	Refrigerant Expansion Valve
3	Liquid Injection Angle Valve	19	Refrigerant Pilot Expansion Valve
4	Oil Pressure Relief Valve	20	Liquid Injection Expansion Valve
5	Water Temperature Bulbwell	21	Seal Oil Expansion Valve
6	Unloader Solenoid Valve Assembly	22	Unloaded Start Solenoid Valve
7	Oil Injection Angle Valve	23	Hot Gas Bypass Solenoid valve
8	Seal Oil Solenoid Valve	24	Suction Check Valve
9	Load Control Temperature Sensor	25	Oil Filter
10	Water Flow Switch	26	Oil Strainer
11	Liquid Injection Solenoid Valve	27	External Oil Pump
12	Sump Oil Drain	28	Oil Return Check Valve
13	Sump Oil Heater	29	Jet Pump
14	Chiller Freeze Up Bulbwell	30	Jet Pump Check Valve
15	Discharge Refrigerant Check Valve	31	Suction Filter
16	Unloader Throttling Valve		

III. OPERATION

E. TYPICAL PIPING SCHEMATICS CONTINUED

NOTE: DO NOT use this piping diagram to troubleshoot your unit. It is typical only and may not reflect the components provided on your unit.

TYPICAL PIPING SCHEMATIC (PCX180H)

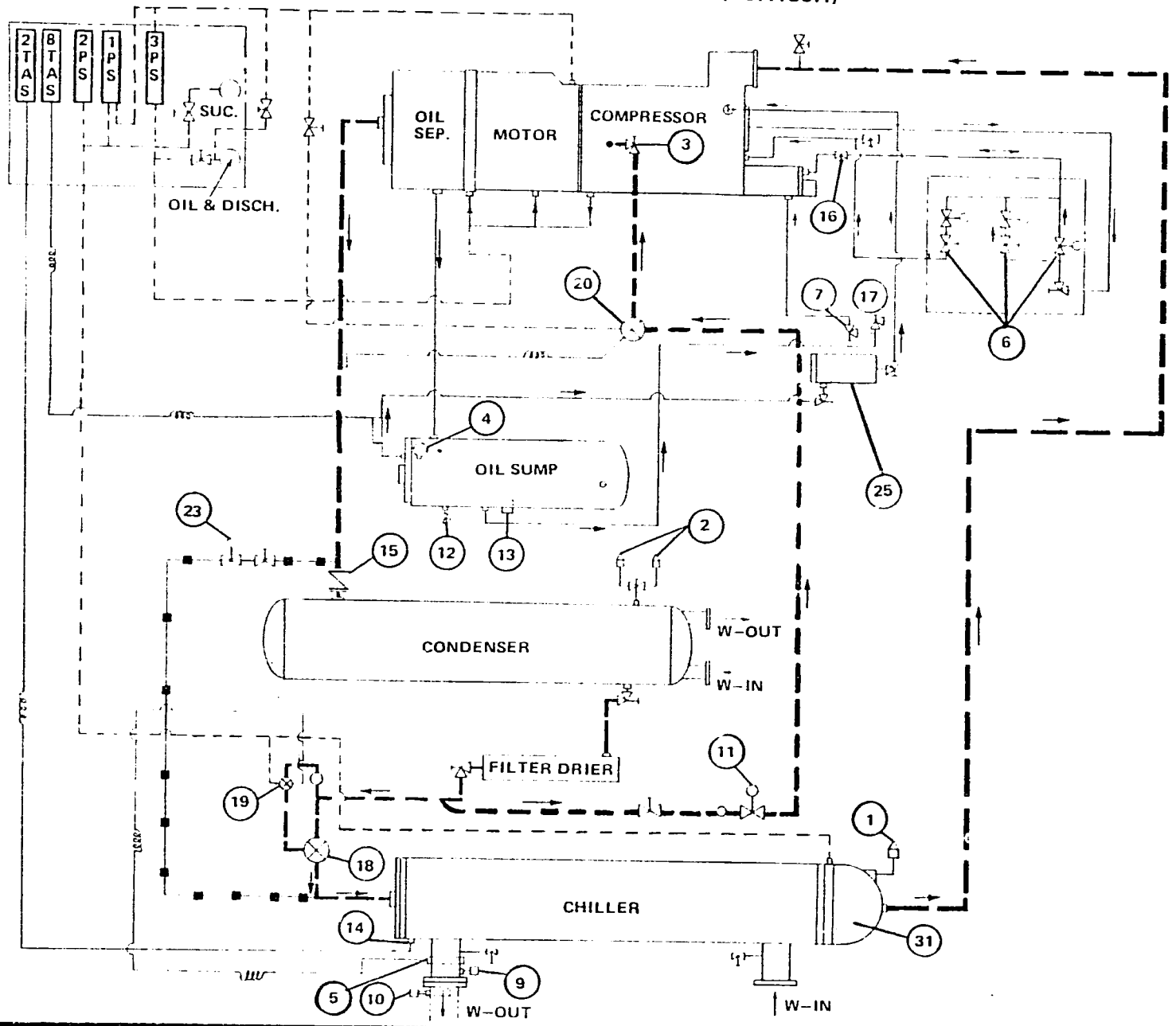

III. OPERATION

E. TYPICAL PIPING SCHEMATICS CONTINUED

NOTE: DO NOT use this piping diagram to troubleshoot your unit. It is typical only and may not reflect the components provided on your unit.

TYPICAL PIPING SCHEMATIC - (PCX290-0)

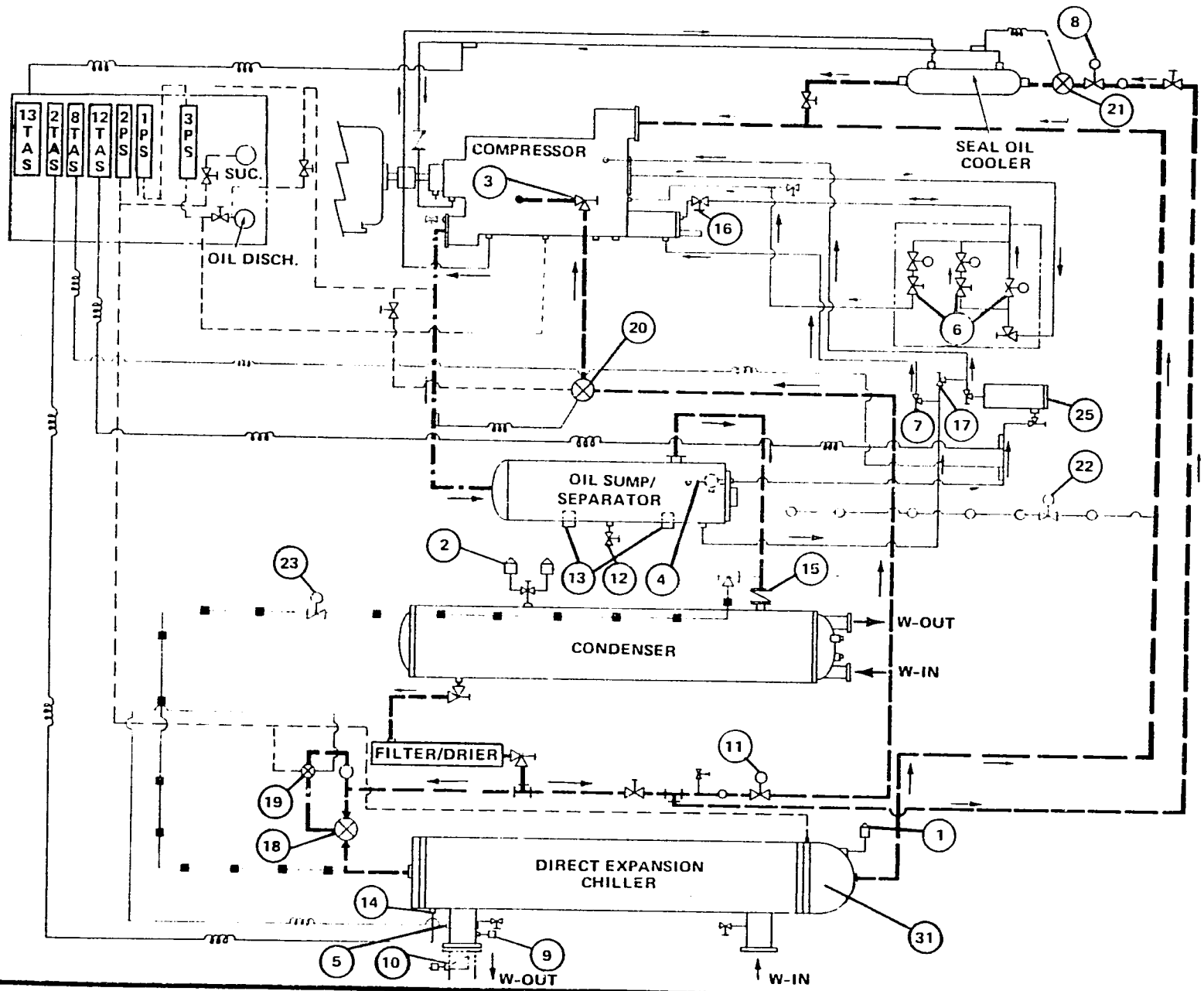

III. OPERATION

E. TYPICAL PIPING SCHEMATICS CONTINUED

TYPICAL PIPING SCHEMATIC FLOODED UNITS

NOTE: DO NOT use this piping diagram to troubleshoot your unit. It is typical only and may not reflect the components provided on your unit.

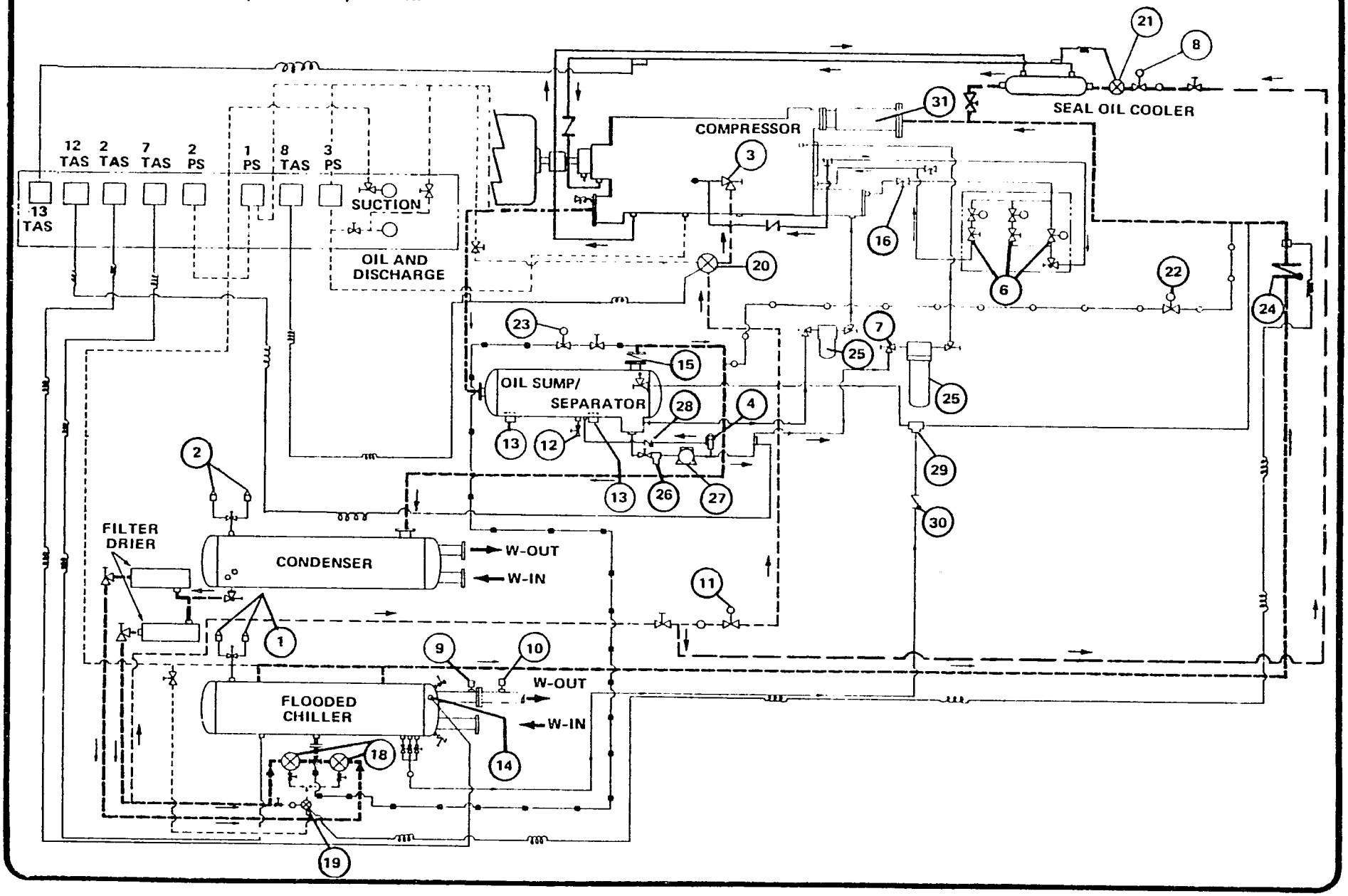

III. OPERATION

F. FUNCTIONS OF ELECTRICAL CONTROLS

Description of controls and the wiring schematics in this manual are typical only. Wiring schematics for a specific unit are shipped with the unit. The wiring schematic also lists control settings.

The electrical panel contains not only controls but also gauges and lights to help determine the phase and quality of operation. The gauges monitor the suction, discharge and discharge oil pressure. The difference between the discharge oil pressure and discharge pressure is the net oil pressure. It should be noted that all gauges should be closed except when they are being read. Indicating lights reflect the following conditions or phases of the unit.

1. LIGHTS

1LT - **Power on - integral part of on-off switch (red or white)**

2LT - **Unit is off on safety controls (red)**

3LT - **Oil pressure below minimum limits (red)**

4LT - **Anti-recycle timer is in the timing phase (green)**

5LT - **Start up delay after the oil pump has started (amber)**

2. MANUAL CONTROLS

1CB - **Control Circuit Breaker**

2CB - **Oil Sump Heaters Circuit Breaker**

1SS - **Master Control Switch - Completes a circuit enabling the unit to start.**
Hermetic compressors - If the unit shuts down because a safety switch opened, the switch must be pushed to the "reset" position to reset the motor winding protector (1TAS) and the oil circuit.

Open compressors - If the unit shuts down because of an oil failure, the switch must be pushed to the "off" position to reset the oil circuit.

3. SAFETY CONTROLS

2FU - **Compressor Motor Housing Fuse**

1TAS - **Hermetic Compressor Motor Winding**
Protects the motor from overheating by opening the safety circuit if the temperature at any of the three strategically placed sensors exceeds the preset temperature (manual reset).

OL - **Compressor and Oil Pump Starter Overloads**
Provides locked rotor and overcurrent protection (manual reset).

1PS - **Hi-Lo Pressure Switch**
Protects against high discharge pressure and low suction pressure. If the discharge pressure exceeds the preset pressure, the contact will open. It must be manually reset on high pressure cutout. If the suction pressure falls below the pre-set pressure, the contact will open. It will automatically reset on low pressure cutout.

13TAS - **Seal Oil Temperature Thermostat Open Compressors**
Protects against excessive temperature of the oil cooling the compressor seal. Opens if temperature rises over the preset temperature (see 12TR) (automatic reset).

12TAS - **High Oil Temperature**
Senses oil temperature after the oil pump. Protects against high oil temperature by opening if the temperature rises above the preset temperature (automatic reset).

7TAS - **Low Refrigerant Temperature Protection Flooded Units**
Senses refrigerant temperature in flooded chiller. Will open if temperature falls below preset temperature (automatic reset).

2TAS - **Freeze Up Thermostat**
Monitors the chilled medium. If the temperature falls below preset temperature, contact will open (automatic reset).

FLS - **Chiller Flow Switch**
Monitors the flow of the chilled medium. Contact will open if flow falls below preset level.

6TAS - **Oil Pump Motor Winding Protector - Hermetic Oil Pump Only**
Temperature is monitored by thermostats embedded in the motor winding. Contact will open if preset temperature is exceeded (automatic reset).

CWS - **Chilled Water Pump Starter**
Auxiliary contact on starter is closed whenever circuit to chilled water pump motor is closed.

1TR - **Anti-Recycle Timer**
Prevents compressor from starting more than three times in one hour. Completes safety circuit.

4. AUTOMATIC AND OPERATING CONTROLS

HTR - **Oil Sump & Compressor Motor Housing Heaters**
Must be operating a minimum of twenty-four (24) hours and the sump oil temperature must be at a minimum of 100°F (38°C) prior to start-up. They do not operate during compressor operation.

1CR - **Master Control Relay**
When all safety controls are closed, relay will close locking itself in and completing a circuit to the remainder of the control circuit.

1M - **Oil Pump Starter**
Starts oil pump and completes circuit to the remainder of the control circuit.

3TR - **Oil Pump Shut Down Time Delay**
Starts at same time as oil pump starter, contacts are timed to open circuit to oil pump starter after 60 seconds delay if oil pressure is not proved.

3PS - **Oil Pressure Switch**
Protects compressor against loss of oil pressure. Opens circuit to oil pressure failure time delay (2TR) when predetermined pressure is reached. If pressure is not reached the timer will time out.

2TR - **Oil Pressure Failure Time Delay**
Begins timing for 20 seconds upon operation of oil pump starter, or if an oil failure is sensed by 3PS. If oil has not reached predetermined pressure, 3PS will remain closed and in twenty (20) seconds the contact will open and shut down the system (manual reset).

F. FUNCTIONS OF ELECTRICAL CONTROLS CONT.

4TR - **Start-Up Delay**
Begins timing for 60 seconds when the oil pump starter operates. Will close the circuit to the compressor control relay (3CR) in one (1) minute. The purpose is to lubricate the compressor and allow the compressor to unload before starting.

2CR - **Transfer Relay**
Activates when the oil pump starter operates. Locks in the oil pump starter and shuts down the oil sump and compressor heaters.

3CR - **Compressor Control Relay**
Completes a circuit to the temperature load controller (TLC), compressor starter control circuit, elapsed time indicator (6TR), seal oil thermostat by-pass timer (12TR), seal oil cooler solenoid (13SOL), liquid injection valve solenoid (8SOL), and opens the circuit to the fast unload solenoid (6SOL) to provide unloaded start.

2PS - **Low Suction Pressure Unload Switch**
Flooded Chillers - senses suction pressure and will complete a circuit to the fast unload solenoid (6SOL) if the pressure falls below the preset level. Direct Expansion Chiller - senses suction pressure completing a circuit to the fast unload solenoid (6SOL), the lock in relay (4CR) and the expansion valve solenoid when the pre-set pressure is reached.

4CR - **Lock In Relay - Direct Expansion Chiller**
When the suction pressure switch (2PS) closes upon low pressure and pumps the unit down, this relay will be energized, locking-in itself and the expansion valve solenoid (4SOL).

6TR - **Elapsed Time Indicator**
Indicates the actual amount of hours the compressor has operated.

12TR - **Seal Oil Thermostat Bypass Timer**
When energized will bypass the seal oil thermostat (13TAS) for a period of four (4) minutes to allow the cooled oil to flow from the seal oil cooler to the compressor seal preventing complete shutdown of the system. If the seal oil temperature has not returned to the preset maximum in this time, the system will shutdown.

4SOL - 5SOL - **Expansion Valve Solenoids**
Controls flow of the refrigerant to the expansion valves used to meet the required refrigeration or air conditioning load.

8SOL - **Liquid Injection Solenoid**
Controls flow of refrigerant to the expansion valves used to control the operating temperature of the compressor.

8TAS - **Low Discharge Temperature Thermostat**
If the discharge temperature is not sufficient, this control will open preventing the liquid injection solenoid from operating.

9CR - **Holding Relay**
Controls the large expansion valve solenoid on units with direct expansion chillers. Will open or close the solenoid depending upon the information received from the reed switches (1RS and 2RS

5RS & 6RS - **Reed or Proximity Switches**
Located on the slide valve indicator, they are activated by a magnet traveling in relationship with the slide valve. They control the large expansion valve solenoid through holding relay 9CR.

1SOL - **Load Solenoid Valve**
When energized, it provides a path to dissipate hydraulic pressure on the slide valve piston which allows discharge refrigerant gas pressure to move the slide valve in the load direction.

2SOL - **Unload Solenoid**
When activated allows pressurized hydraulic fluid to flow through a metering valve to the slide valve piston causing it to move in the unload direction.

6SOL - **Fast Unload Solenoid**
Performs the same function as the unload solenoid except that it does not have a metering valve. It operates at start up to provide a minimum load and when the suction pressure falls below the preset pressure of the Low Suction Pressure Unload Switch (2PS)

8SOL - **Liquid Injection Solenoid Valve**
When activated permits liquid refrigerant to flow to the liquid injection expansion valve.

13SOL - **Seal Oil Cooler Solenoid Valve**
When energized allows liquid refrigerant to flow to the seal oil cooler expansion valve.

TLC - **Temperature Load Controller**
The temperature load controller (TLC) controls a hydraulic cylinder giving the unit an infinitely variable capacity control. It senses the temperature of the chilled water through a sensor located at the chilled water outlet connection. As the water temperature rises or falls, the TLC will signal the unloader system to increase or decrease the compressor capacity to match the load and keep the chilled water at the preset temperature.

When the TLC receives a signal from the chilled water temperature sensor that the load has increased, it completes a circuit to the load solenoid causing the compressor to load. After the required capacity of the compressor is reached the load solenoid will be de-energized. The TLC will continually monitor the temperature sensor completing and opening circuits to the load and unload solenoids as necessary.

The TLC also senses the current draw of the motor through a current transformer located in the starter control panel. If the motor load reaches 100% of the preset maximum load setting, the unload solenoid will be energized and the compressor will unload. The current control will override all other controls in the auto or manual positions.

F. FUNCTIONS OF ELECTRICAL CONTROLS CONT.

5. HEAT RECLAIM CONTROLS

All heat reclaim controls, shown on the typical schematic, are used to prevent the packaged chiller from tripping out on high pressure during periods of heat reclaim, to provide higher condensing temperatures during these periods, and to insure a minimum of rejected heat for reclamation during those periods of light cooling load. It is the responsibility of the engineer and contractor of a particular job, to provide controls necessary for the operation and safety of the heat reclaim and chilled water systems external to the packaged chiller.

13PS - **Head Pressure Control**
This control senses discharge pressure, and has three steps of control and is automatically reset:

1. When the first step of rise in pressure is reached, timed relay (11TR) will be activated and power will be available to the low slide valve block relay (6CR) through the low limit relay (7CR).

2. Rise in pressure to close the second stage will prevent the compressor from loading further.

3. If the pressure should rise closing the third step, the control of the unload solenoid (2SOL) by the temperature load controller(TLC) will be bypassed causing the compressor to unload.

11TR - **Heat Reclaim Transition Timer**
When this control is activated the instantaneous contacts open the circuit to the load solenoid (1SOL) preventing it from loading, and closes a circuit to the unload solenoid (2SOL) bypassing the temperature load controller (TLC) causing the system to unload. The timed contact, which is delayed for three minutes, activates the heat reclaim relay (11CR).

11CR - **Heat Reclaim Relay**
Energization of this relay will close a circuit to the load solenoid (1SOL) and open a circuit to the unload solenoid (2SOL). putting them under the influence of the temperature load controller (TLC).

3RS & 4RS - **Low Limit Reed Switches**
These are proximity switches located on the slide valve indicator and are activated by a moving magnet. They are set to prevent the compressor from unloading below 25% of its slide valve position through the low limit control relay (7CR).

7CR - **Low Limit Control Relay**
This relay is activated by the reed switches (3RS & 4RS) and through its action controls the low slide valve block relay (6CR).

6CR - **Low Slide Valve Block Relay**
When the compressor has unloaded to the point at which the reed switches are set, approximately 25% of slide valve position, this control relay will be activated. It will open circuits to the unload solenoid (2SOL) and fast unload solenoid (6SOL) preventing the unit from unloading further. In addition, a circuit is closed to the hot gas solenoid (3SOL).

3SOL - **Hot Gas Solenoid**
When activated this solenoid will allow discharge gas to be bypassed to the inlet side of the chiller.

2PS - **Low Suction Pressure Switch**
Sensing low pressure this switch will cause the compressor to unload through the fast unload solenoid (6SOL) on flooded units and through control relay (12CR) on direct expansion units.

12CR - **Low Suction Pressure Unload Relay Direct Expansion Units**
This relay when activated opens a circuit to the load solenoid (1SOL) and closes a circuit to the unload solenoid (2SOL) bypassing the temperature load controller (TLC).

16TAS - **High Entering Chilled Water Safety Flooded Units**
Senses the chilled water temperature and if it rises to the preset temperature will cause the compressor to unload through the fast unload solenoid (6SOL).

6. HEAT RECLAIM OPTION

1RS & 2RS - **High Limit Reed Switches**
These proximity switches are located on the slide valve indicator and are activated by a magnetic field. They are set to prevent the compressor from loading above a set point.

8CR - **High Limit Control Relay**
This relay is activated by reed switches (1RS & 2RS) and through its action controls the high slide valve block relay (5CR).

5CR - **High Slide Valve Block Relay**
When the compressor has loaded to the point where the reed switches are set, this control relay will be activated. It will open a circuit to the load solenoid preventing it from loading further.

7. TYPICAL START-UP OF PACKAGED CHILLER

Assume that the following conditions are met:

- Water is flowing through the chiller.
- All safety controls are made.
- Power has been furnished to the unit for twenty-four hours and the oil is at the proper temperature.
- Cooling load is available.

The control switch, 1SS, is made and the following action takes place.

1. Power on light (1LT) illuminates the master control relay (1CR) is energized and its contacts close.

2. Through the operation of 1CR the oil pump starter (1M) is energized and the oil pump shut-down relay (3TR) begins timing for 60 seconds before opening its contacts.

F. FUNCTIONS OF ELECTRICAL CONTROLS CONT.

3. If insufficient pressure differential is sensed by the compressor oil pressure differential switch (3PS), the oil pressure failure time delay relay (2TR) and oil pump time delay relay (3TR) will simultaneously start to time. (2TR) will time open after 20 seconds and (3TR) will time open after 60 seconds. This action will de-energize the transfer relay (2CR). Its contacts will open and de-energize the oil pump, preventing the machine from starting. If the unit is operating this action will shut the unit off.
4. When the start-up time delay (4TR) has completed its timing function, it will energize the compressor control relay (3CR).

- **Direct Expansion Units** - Starting sequence is as indicated in steps 1 thru 4 above plus:

5. Control Relay (3CR) completes a circuit to the compressor starter, the elapsed time indicator (6TR) and furnishes power through the transformer (2T) to the temperature load controller (TLC). It also furnishes control power to the pumpdown switch (2PS). It also opens a circuit to the fast unload solenoid (6SOL).
6. When the compressor has pumped down the low pressure switch (2PS) will close, furnishing power to the lock in relay (4CR), and the expansion valve solenoid (4SOL). The expansion valve will begin to feed the unit and the unit will now be under the influence of the temperature load controller (TLC).

- **Flooded Units** - Starting sequence is as indicated in steps 1 thru 4 above plus:

5. Control relay (3CR) completes the circuit to the compressor motor starter, the elapsed time indicator (6TR), and furnishes power through the transformer (2T) to the temperature load controller (TLC). The expansion valves (4SOL & 5SOL), liquid injection solenoid (8SOL), seal oil cooler solenoid (13SOL), and seal oil thermostat are also energized. 3CR also opens a circuit to the fast unload solenoid. The compressor will now be under the control of the temperature load controller (TLC).

- **Heat Reclaim Units** - Starting sequence is as indicated in steps 1 thru 4 above plus:

5. Control relay (3CR) completes a circuit to the compressor starter control circuit, expansion valves (4SOL & 5SOL), seal oil cooler solenoid (13SOL), liquid injection solenoid (8SOL) seal oil thermostat bypass timer (12TR), elapsed time meter (6TR), and furnishes power through the transformer (2T) to the temperature load controller (TLC). It also opens a circuit to the fast unload solenoid (6SOL). The unit is now operating directly under the temperature load controller (TLC).

STARTER CONNECTIONS

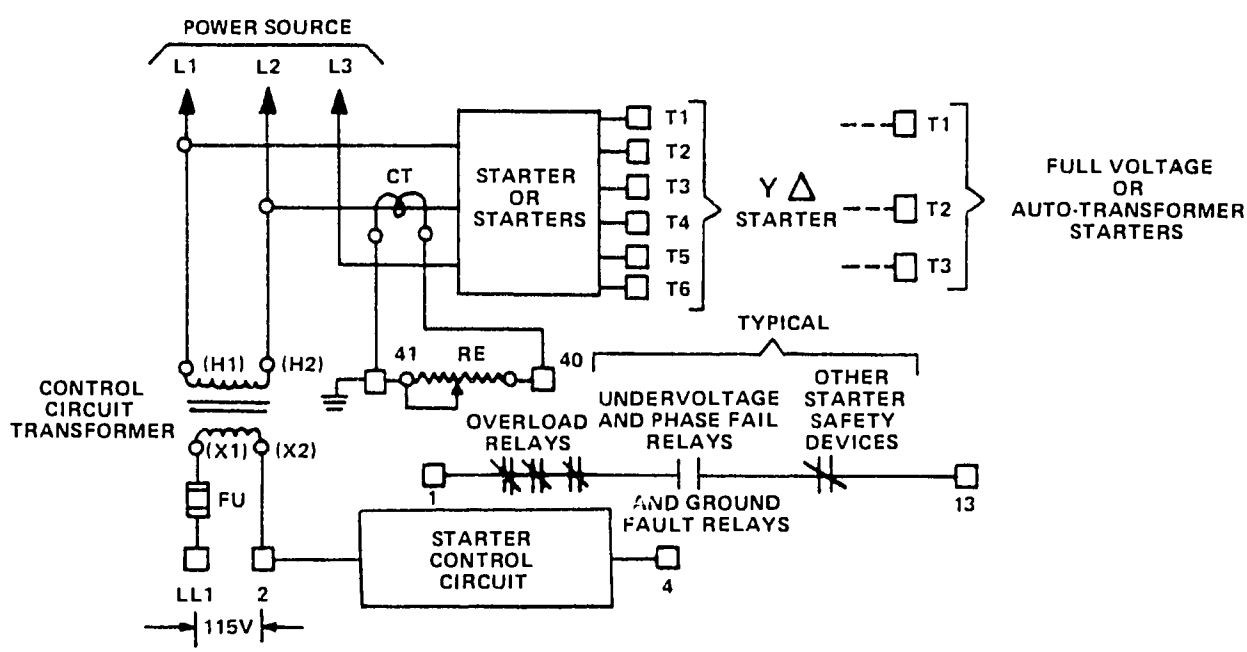

NOTES:

1. Control transformer is optional. X2 is to be grounded only when transformer is furnished.
2. Starter must be under direct control of terminals 2 & 4. No device either manual or automatic shall be used which will stop or start the compressor motor independently of the signal applied to terminals 2 & 4. Any such necessary devices shall be connected between terminals 1 & 13 as shown under "typical" above and shall be manual reset.
3. Field wiring terminals must be numbered as shown and must be directly connected to like numbered terminals in PCX/DBX control panel.

G. TYPICAL ELECTRICAL SCHEMATICS

TYPICAL HERMETIC - FLOODED CHILLER

These diagrams are typical only. Consult the diagram accompanying the unit for control settings and wiring logic.

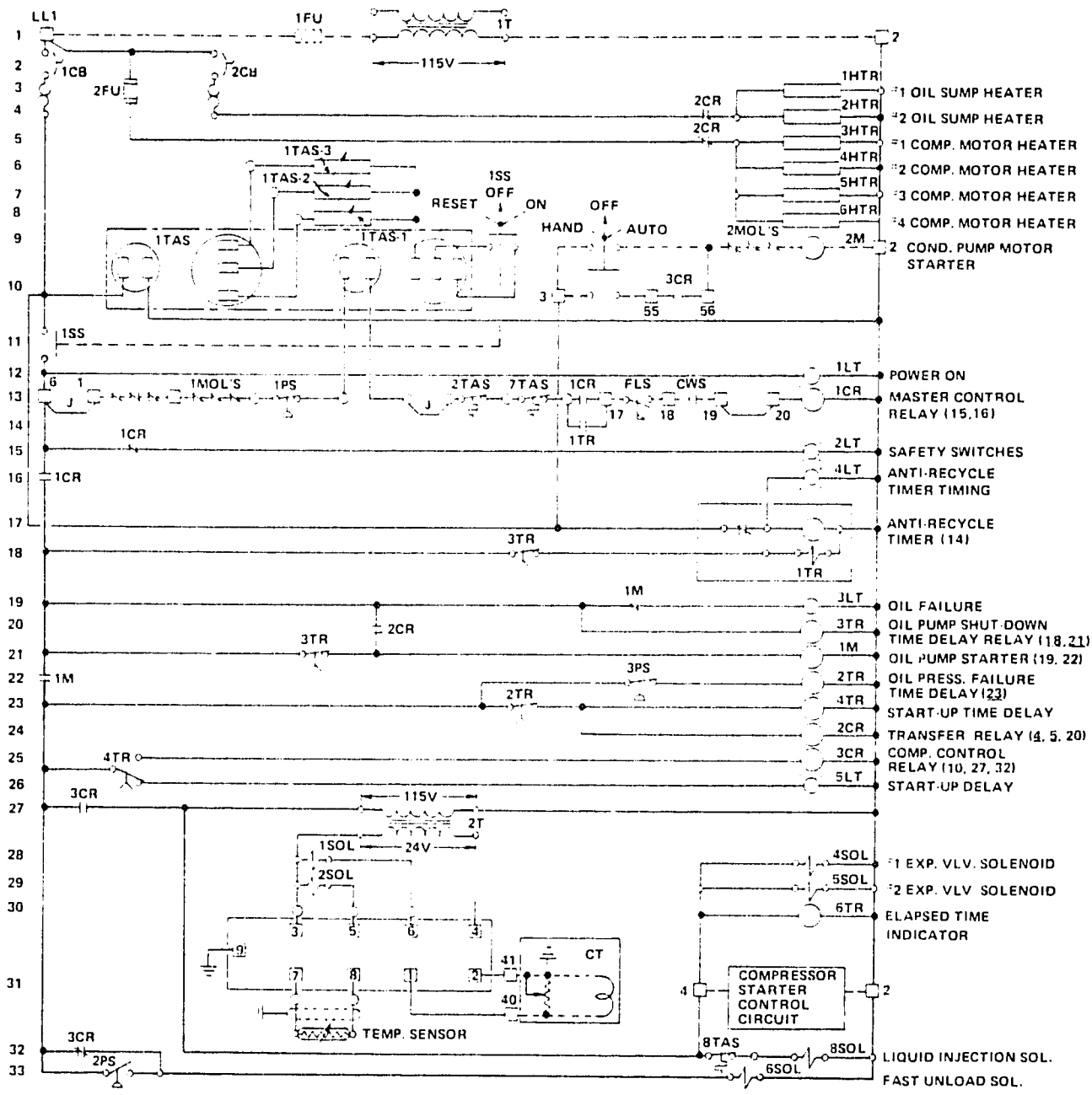

G. TYPICAL ELECTRICAL SCHEMATICS CONTINUED

TYPICAL HERMETIC - DIRECT EXPANSION CHILLER

These diagrams are typical only. Consult the diagram accompanying the unit for control settings and wiring logic.

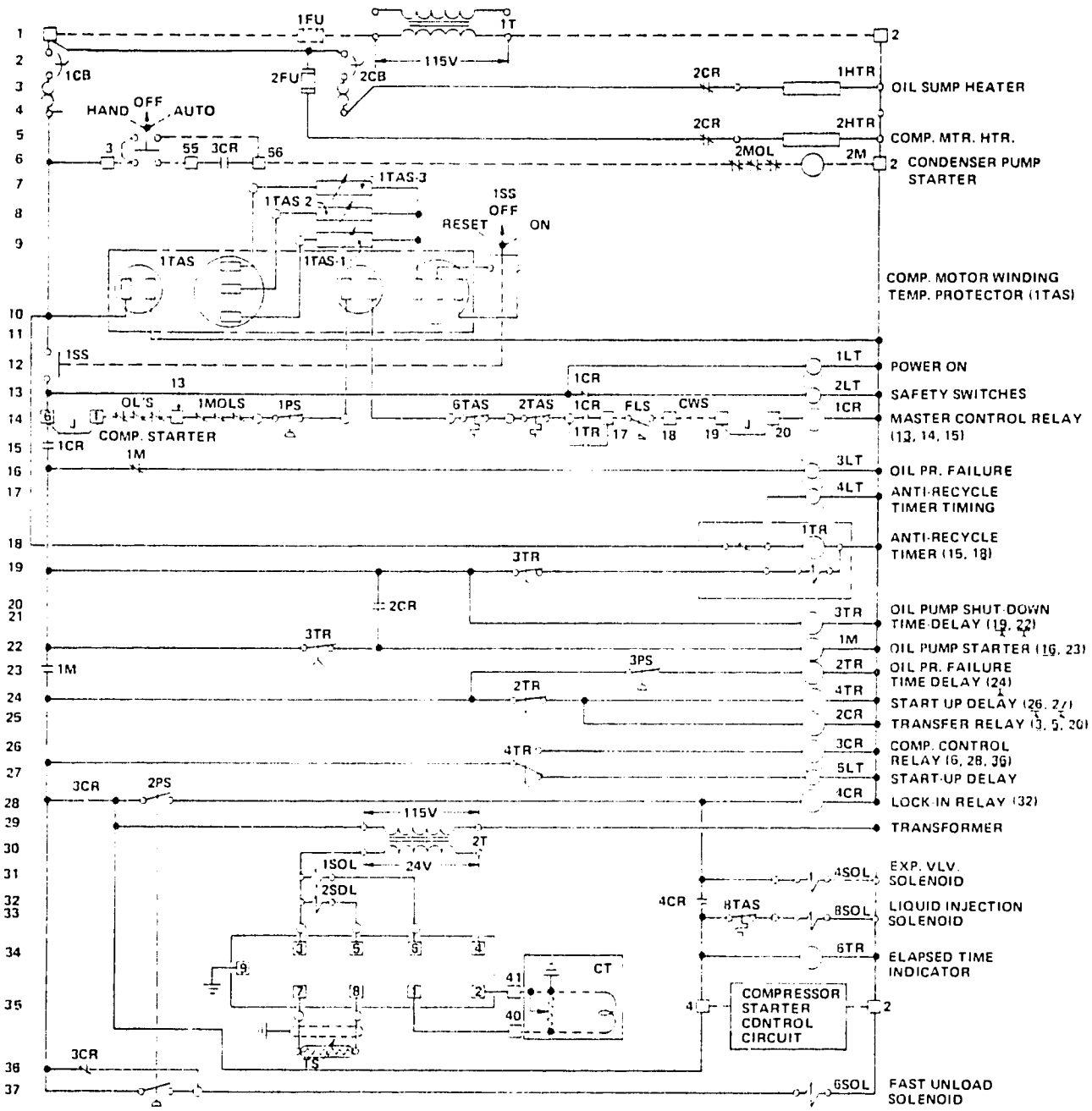

TYPICAL DIRECT DRIVE DIRECT EXPANSION CHILLER

These diagrams are typical only. Consult the diagram accompanying the unit for control settings and wiring logic.

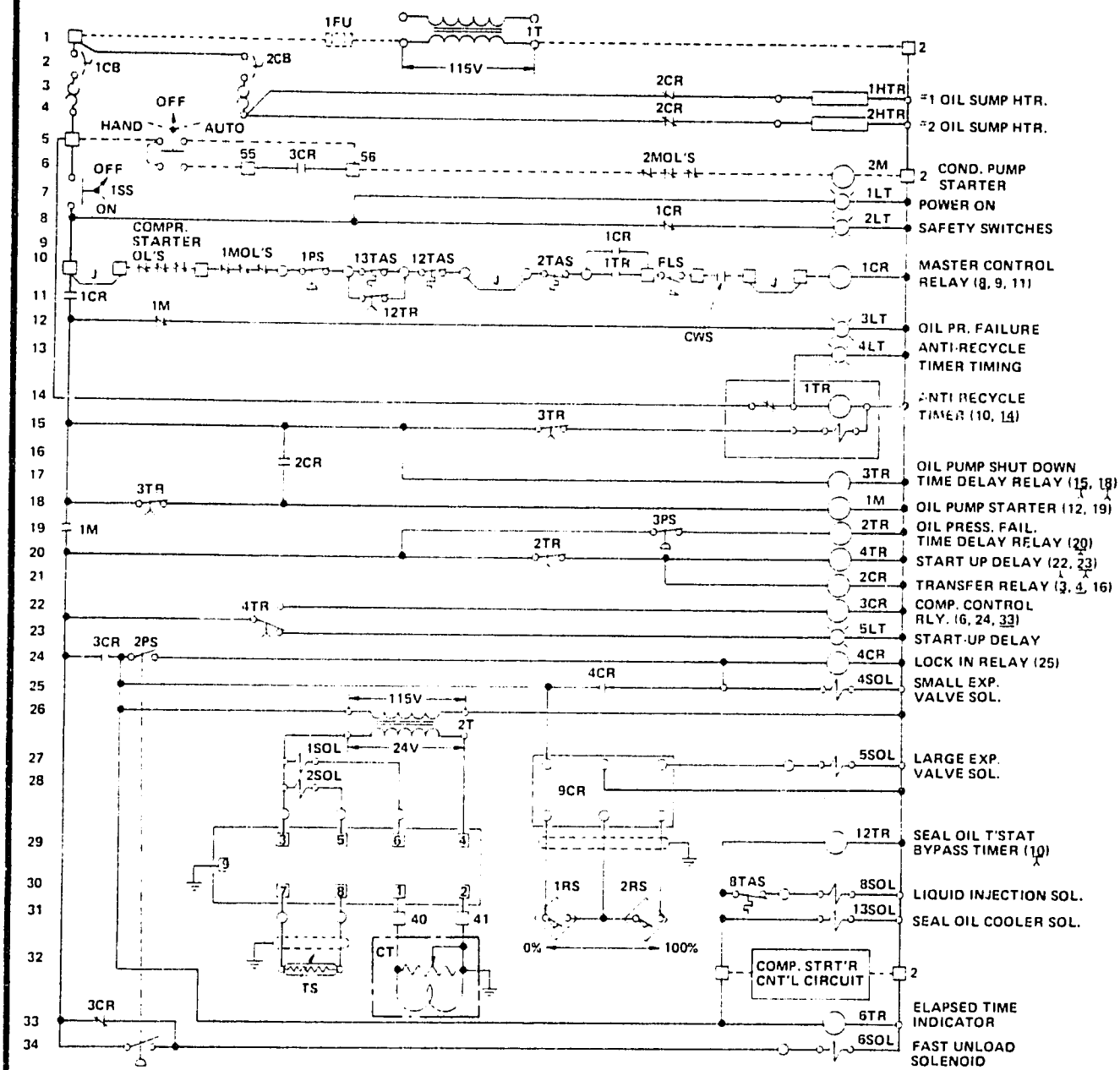

TYPICAL DIRECT DRIVE - FLOODED CHILLER

These diagrams are typical only. Consult the diagram accompanying the unit for control settings and wiring logic.

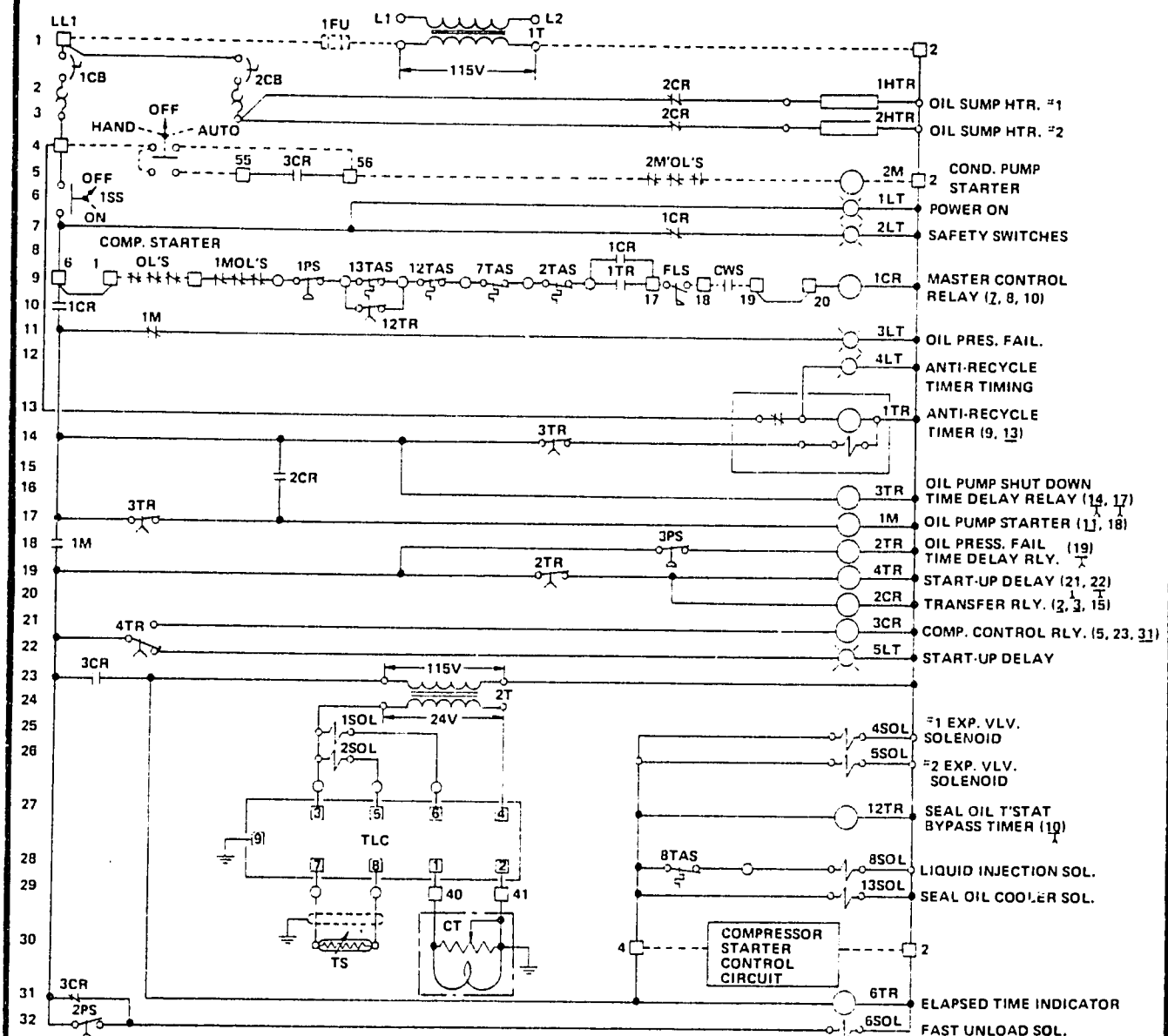

G. TYPICAL ELECTRICAL SCHEMATICS CONTINUED

TYPICAL DIRECT DRIVE - HEAT RECLAIM WITH DIRECT EXPANSION CHILLER

These diagrams are typical only. Consult the diagram accompanying the unit for control settings and wiring logic.

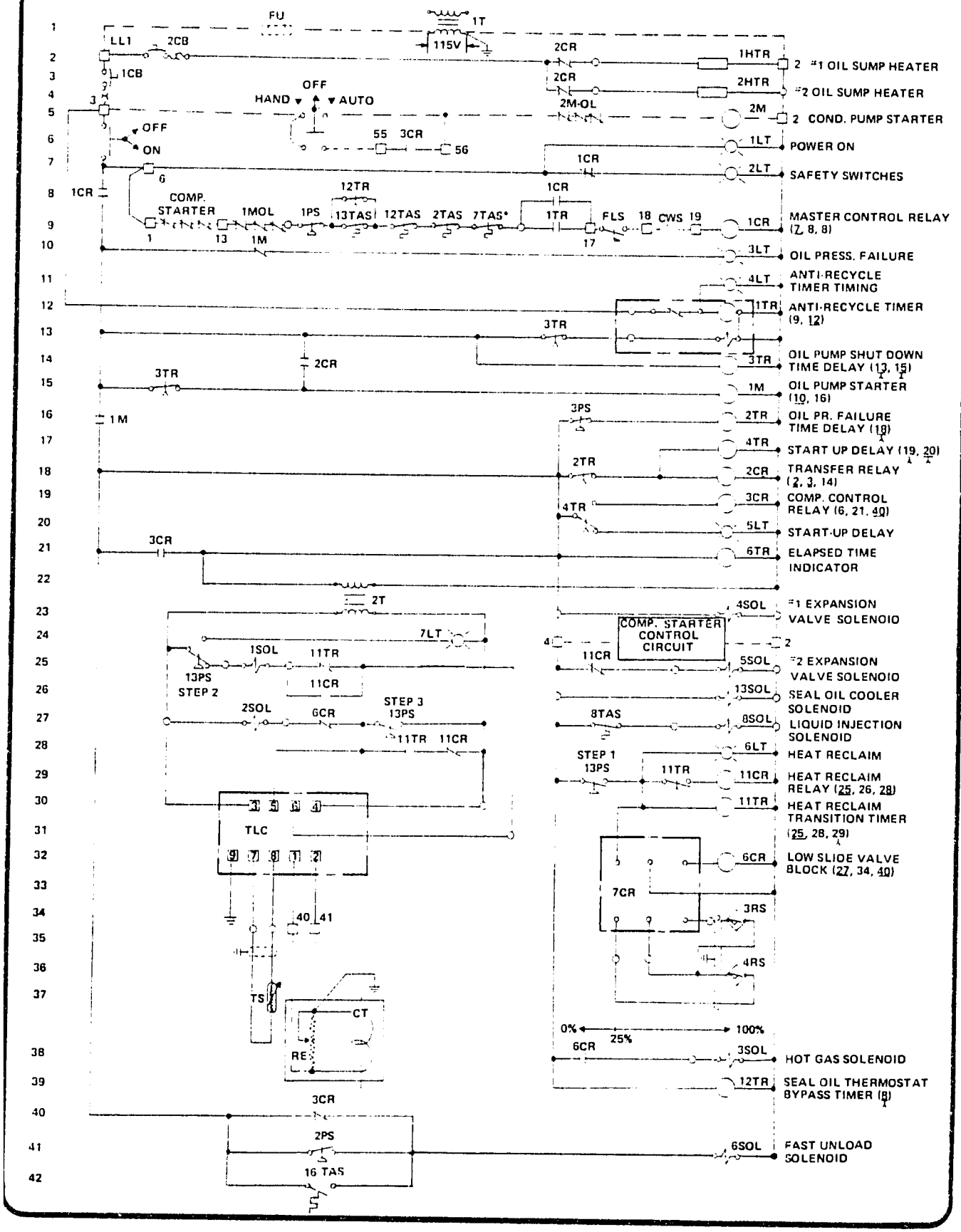

G. TYPICAL ELECTRICAL SCHEMATICS CONTINUED

TYPICAL DIRECT DRIVE - HEAT RECLAIM WITH FLOODED CHILLER

These diagrams are typical only. Consult the diagram accompanying the unit for control settings and wiring logic.

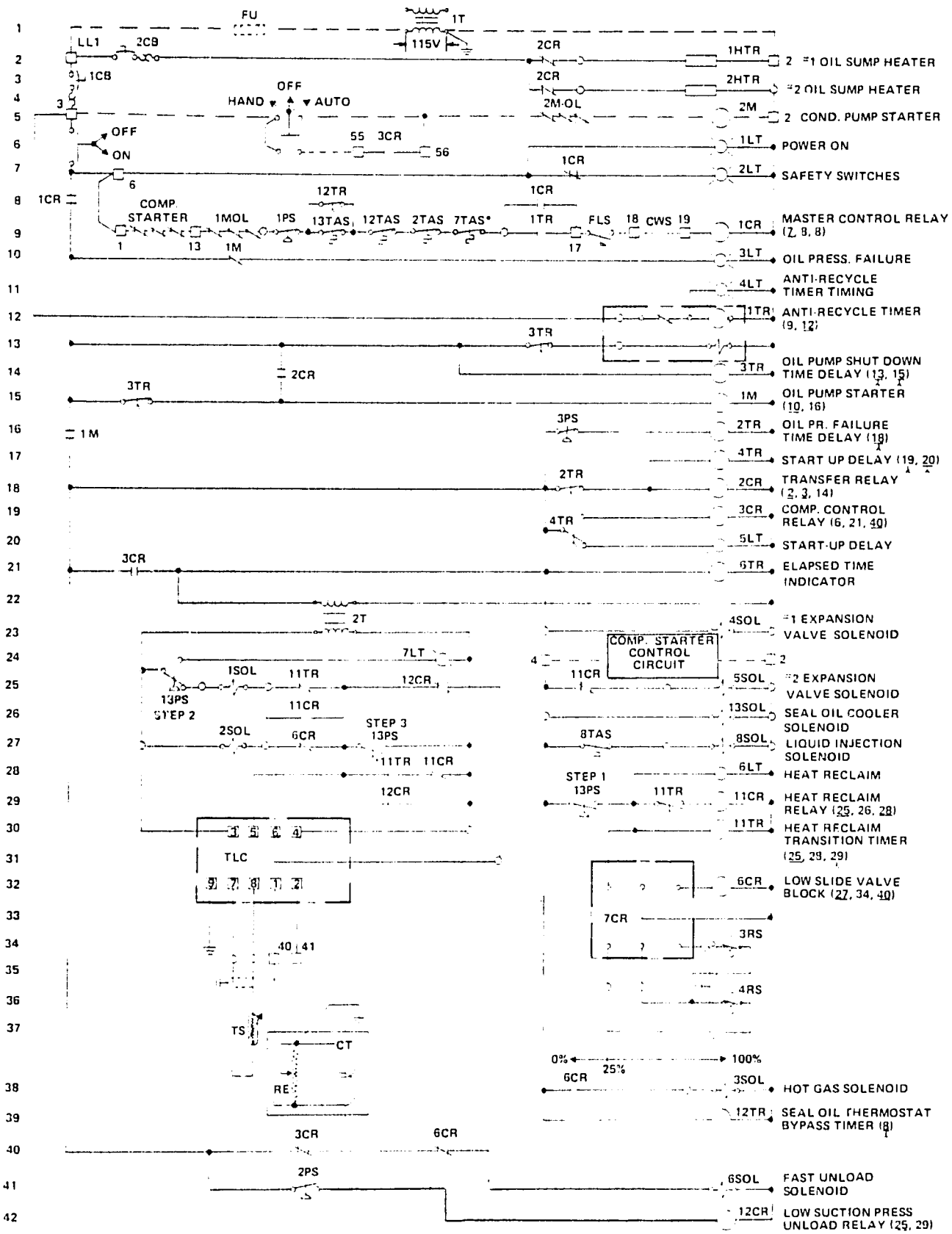

IV. MAINTENANCE

A. GENERAL

Maintenance personnel should become thoroughly familiar with the unit and the contents of this manual in order to properly diagnose and rapidly correct and prevent minor difficulties. Routine or periodic maintenance should be followed to insure a comprehensive preventative maintenance program minimizing costly repairs. National Service Bulletins as referenced in this section, may be obtained from Dunham-Bush, West Hartford, Connecticut, 06110, National Service Department.

CAUTION: All valve caps, packing glands and pipe plugs must be tightened securely after performing maintenance and/or periodically, to prevent refrigerant leakage.

WARNING: All inspection, maintenance, or repairs should be done by an authorized, qualified, Dunham-Bush, Inc., Service Representative as listed in the latest edition of Form No. 9822. Failure to comply may jeopardize the warranty.

B. PERIODIC MAINTENANCE

1. PRE-INITIAL START-UP MAINTENANCE

a. Insure unit is level.

b. Check for any piping stresses on unit.

c. Check coupling alignment. (Direct drive compressor and oil pump motors)

d. Tighten all wiring connections.

e. Check tripping of safety controls for grounding. (See Typical System Tests Section)

f. Check compressor housing heaters and oil sump heaters for proper operation.

g. Check all control and starter wiring connections for grounding.

h. Sump oil level must be visible in sump sight glass, sump oil temperature must be at a minimum of 100°F (37.8°C).

j. Hydronic system must be vented free from entrapped air, and the piping properly supported to the unit.

k. All satellite equipment and associated control devices must be operationally checked and capable of handling their design capacities.

m. Inspect for external refrigerant leaks with an electronic leak tester or halide torch.

n. Perform "insulation resistance test" and record temperature and meg ohm readings. Consult National Service Bulletin SR112 for additional information.

p. Check refrigerant indicators for evidence of moisture.

NOTE: If moisture is evident prior to initial start-up, the refrigerant indicators should be monitored after start-up to insure that the moisture is removed. If moisture is evident after minimal running time, the unit must be shut-down and the filter drier elements replaced. (See Component Maintenance Section)

r. Adjust limit switches.

2. POST INITIAL START-UP AND DAILY MAINTENANCE

NOTE: A log of daily readings should be maintained. (Refer to Maintenance Records Section)

a. Check suction superheat conditions after start-up for proper adjustment at thermal expansion valve. (Refer to Component Maintenance Section)

b. Inspect sight glasses for the following:

- Liquid Line, Inlet Side of Pilot Valve - Inspect for a full glass free from bubbles.
- Condenser Sight Glass (if equipped) - Inspect level to be visible.
- Liquid Injection Line Sight Glass (if equipped - Sight glass (downstream of solenoid) will be nearly empty if liquid injection solenoid is off. Sight glass will be full of liquid refrigerant, (if located upstream of TX valve) or flashing refrigerant (if located downstream of TX valve).

c. Check and record the following:

- Suction, discharge and oil pressures.
- Condenser inlet and outlet water temperatures.
- Chiller inlet and outlet cooling medium temperatures.
- Compressor motor amps.
- Oil Temperature.
- Compressor motor voltage.
- Discharge Temperature

d. Initial seal drainage collection (direct drive compressor) can be 0.31 cubic inches per hour (5 cc per hour) after start-up. After the unit has run a seven day break-in period, the normal seal drainage is 0.06 to 0.24 cubic inches per hour (1 cc to 4 cc per hour).

e. Check evaporator oil return (if equipped) to be at liquid level. (Refer to Component Maintenance Section)

f. Rotate capacity control hot gas bypass (optional) throttling valve to proper adjustment after initial start-up.(Refer to Sub-System Maintenance Section)

g. Check refrigerant indicators for evidence of moisture. Change filter drier elements if required. (Refer to Component Maintenance Section)

3. 1000 HR. (MONTHLY) INTERVAL MAINTENANCE

NOTE: A log of 1,000 hour readings should be maintained, and the data compared to daily values for evidence of operational changes, i.e. condensing pressure, superheat temperatures, compressor/oil pump motor current amps, etc. (refer to maintenance records).

B. PERIODIC MAINTENANCE CONTINUED

3. 1,000 HR. INTERVAL MAINTENANCE - CONT.

a. Check oil sump sight glass to be at proper level.

b. Check oil filter pressure drop and replace filter elements if necessary. A clean filter will have 1 to 2 psid (6.9 to 13.8 kPa). The oil filter should be changed at 6 psid (41.4 kPa) pressure drop across the filter.

c. Check gages and controls for proper operation and calibration.

d. For other than water chiller applications, field test chiller cooling medium for proper freeze point. (Brine applications, check pH)

e. Inspect all motor starter control relay contacts for arcing and replace if required. Check thermal switch heaters and starter linkages for proper operation.

f. Check compressor and oil sump heaters for proper operation.

g. Check and record the following additional items:

- Oil temperature at manifold
- Oil pump motor current
- Oil pump motor voltage
- Suction superheat
- Discharge superheat
- Chiller and condenser pressure drop

h. Check filter drier pressure drop (Maximum operational pressure drop across filter is 5 psid (34.5 kPa)

j. Check unloaders for proper loading and unloading speed. For a full stroke a maximum of two (2) minutes should elapse.

k. Check all sub-systems for proper operation, i.e. seal oil cooler, evaporator oil return, vapor injection, liquid injection, water cooled oil cooler. (Refer to Oil Cooling System Maintenance Section and Sub-System Maintenance Section)

m. Check condenser water regulating valve(s) for proper adjustment.

4. 3,000 HOUR INTERVAL MAINTENANCE

a. Check coupling alignment (direct drive compressors, oil pump).

b. Field test oil for acidity. Take action if required. Low temperature and heat reclaim require professional analysis at 3,000 interval. Refer to National Service Bulletin SR96.

NOTE: PH factor and total acid number (TAN) are highly responsive to moisture.

c. Perform "insulation resistance test" (Hermetic compressor, oil pump motors) and record meg ohm and temperature readings (refer to test procedures).

5. ANNUAL MAINTENANCE

a. Send sample of oil to laboratory for thorough analysis. Records of the analyses will provide a continuous case history, and insight, as to what system components have contributed to the quality of the oil. Refer to National Service Bulletin SR96 for analyses information. Change oil if required.

b. Send sample of chiller medium and condenser water to laboratory for analysis. This will provide insight as to what maintenance may be performed to prevent corrosive chemical activities. (See component maintenance)

c. Send sample of refrigerant to manufacturer for professional analysis of contamination. Water content should not exceed 20 PPM.

d. Check, recalibrate operating and safety controls. Design settings are noted on the particular job wiring diagram. (See system tests)

e. Inspect and clean all satellite equipment per manufacturer's recommendations.

f. Check compressor seal for refrigerant and excessive oil leakage. If a maintenance action is necessary, refer to the latest edition of the DBX Compressor Manual 6136. If necessary, an update to the latest seal design is recommended.

g. Check compressor thrust bearings by loosening coupling center and checking male rotor for axial float. If axial float exists, refer to Compressor Service Manual 6136 for thrust bearing service/replacement.

h. Insure compressor coupling is aligned.

j. Lubricate compressor motor (direct drive) per manufacturer's recommendations.

k. Perform "insulation resistance test" (Hermetic compressor/oil pump motors)

m. Remove condenser heads, and have tubes inspected for corrosion by a professional agency. Clean condenser and heat exchanger(s) as outlined in this manual. Failure to comply may result in system problems. Plug or replace tubes if required.

n. Check, re-adjust oil pump end clearance. Align oil pump motor coupling (direct drive oil pump).

6. 25,000 HOUR MAINTENANCE

a. Perform annual maintenance.

b. Replace compressor shaft seal with latest version.

c. Inspect/replace compressor unloader, injection tube, and slipper seal parts if abnormal operation exists.

d. Inspect/replace compressor unloader guide block if wear is evident. Check slide valve guide and spindle snap rings for security.

e. Check compressor balance piston/sleeve clearance. Replace if beyond limits or if there has been any changes in unit oil pressure.

f. Check rotors for radial and lateral movement. If movement is beyond pre-selected limits, take appropriate action or consult National Service.

g. Hermetic Motor

- Meg motor and compare with previous readings.
- Replace motor terminal bushings with latest design bushings if not previously updated. Remeg motor after reassembly and record.

7. 50,000 HOUR MAINTENANCE

a. Repeat 25,000 hour maintenance.

b. Replace thrust bearing.

c. Hermetic motor inspection.

- Meg motor and compare with previous readings.

B. PERIODIC MAINTENANCE CONTINUED

- Have motor service engineer inspect motor. If any significant deterioration of epoxy, lashings, or insulation exists, arrange to have motor repaired by approved motor service company. Remeg motor after reassembly and record.
- Inspect hermetic motor bearings and thrust washers for abnormal wear.

8. 75,000 HOUR MAINTENANCE

A major disassembly and inspection of the compressor is to be made. The compressor condition will determine if it should be field rebuilt or scheduled for a factory exchange rebuild.

9. SEASONAL SHUT-DOWN MAINTENANCE

a. Shut down PCX Unit in normal manner and partially pumpdown system.
b. Perform annual maintenance.
c. If unit is located where ambient temperature will be below freezing, drain all water thoroughly and blow out tubes (flooded chiller) or vessel (direct expansion chiller) with compressed air.
NOTE: Simply draining is not sufficient.
d. Open disconnect switches.
e. Run the oil pump periodically to fill the pump seal cavity with oil. This will prevent refrigerant from leaking. (Direct Drive Units)

C. MAINTENANCE RECORDS

1. LOGS

It is recommended that permanent daily records of system operating conditions be recorded at least once a day. The records should be retained as they are invaluable in determining patterns of operational change that will indicate the need for maintenance or service. System design conditions are established by the readings entered when the unit is first installed. Dunham-Bush, Inc., Form No. 9181 Log Sheet (See Appendix A), will serve this function admirably.

NOTE: In addition to the Daily/Monthly Log sheets, annual and seasonal maintenance is required. (See Periodic Maintenance Section)

The locations on the unit from which data may be obtained are shown in Figures 18 thru 22 for a typical unit.

The log sheets should be reviewed and evaluated periodically to determine operational trends.

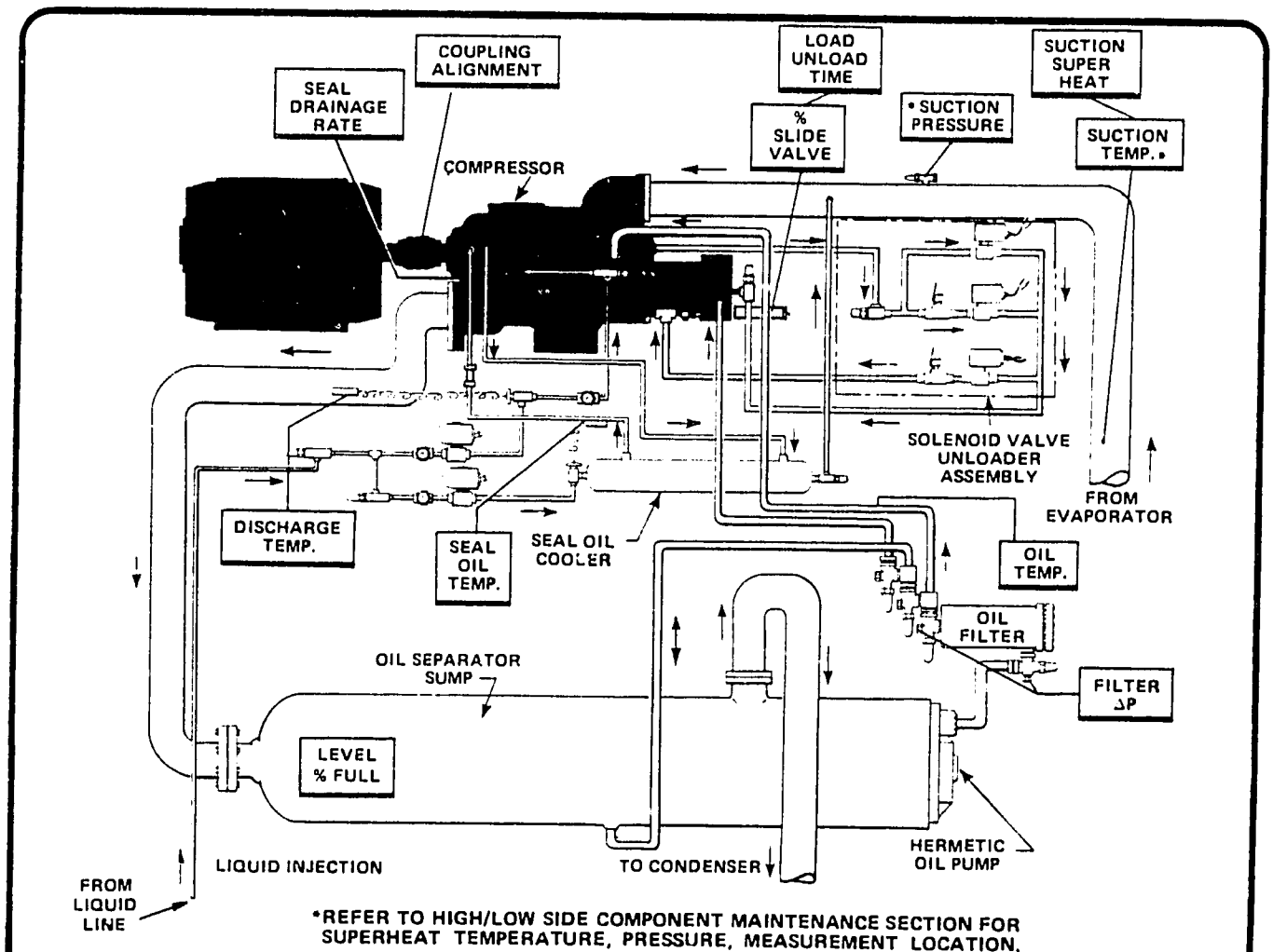

FIG. 18 TYPICAL DIRECT DRIVE COMPRESSOR WITH INTEGRAL SEPARATOR SUMP AND HERMETIC OIL PUMP

C. MAINTENANCE RECORDS CONTINUED

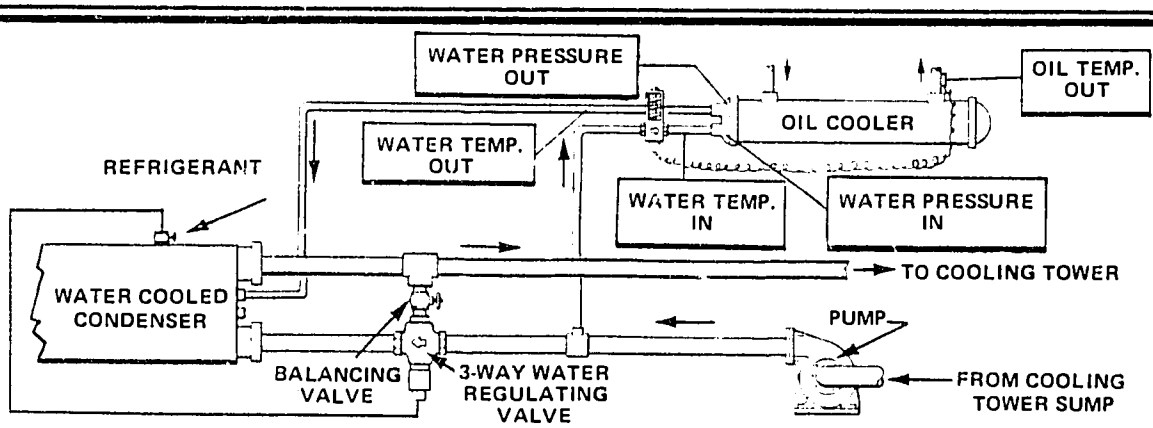

FIG. 19 TYPICAL WATER COOLED OIL COOLER (LOW TEMPERATURE APPLICATIONS)

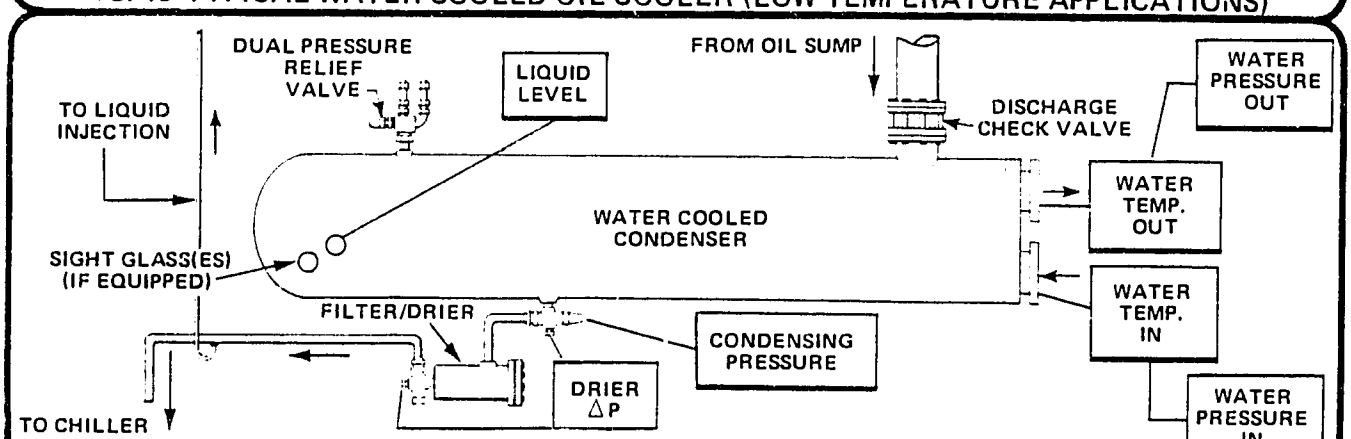

FIG. 20 TYPICAL SINGLE BUNDLE WATER COOLED CONDENSER

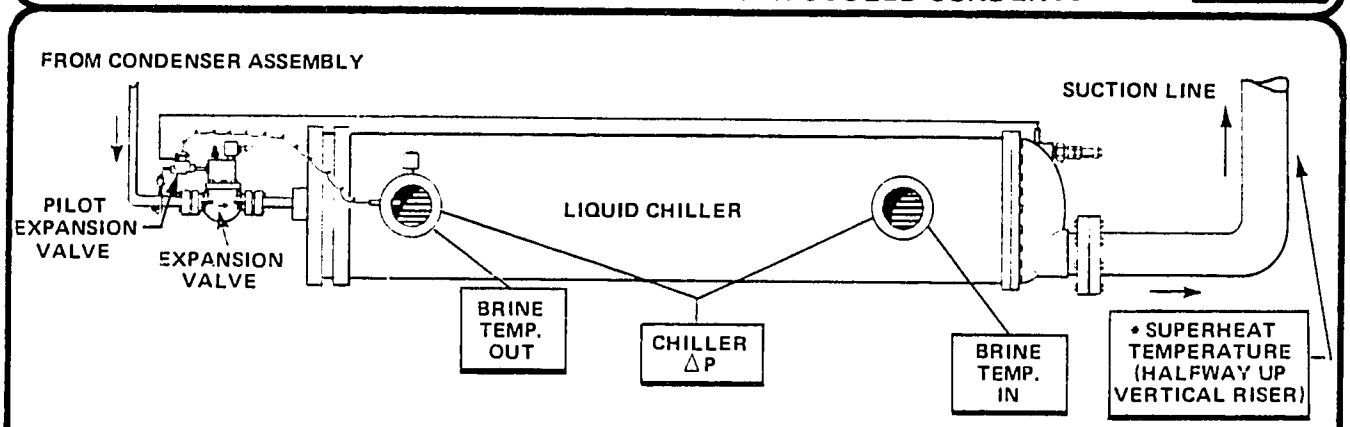

FIG. 21 TYPICAL DIRECT EXPANSION CHILLER

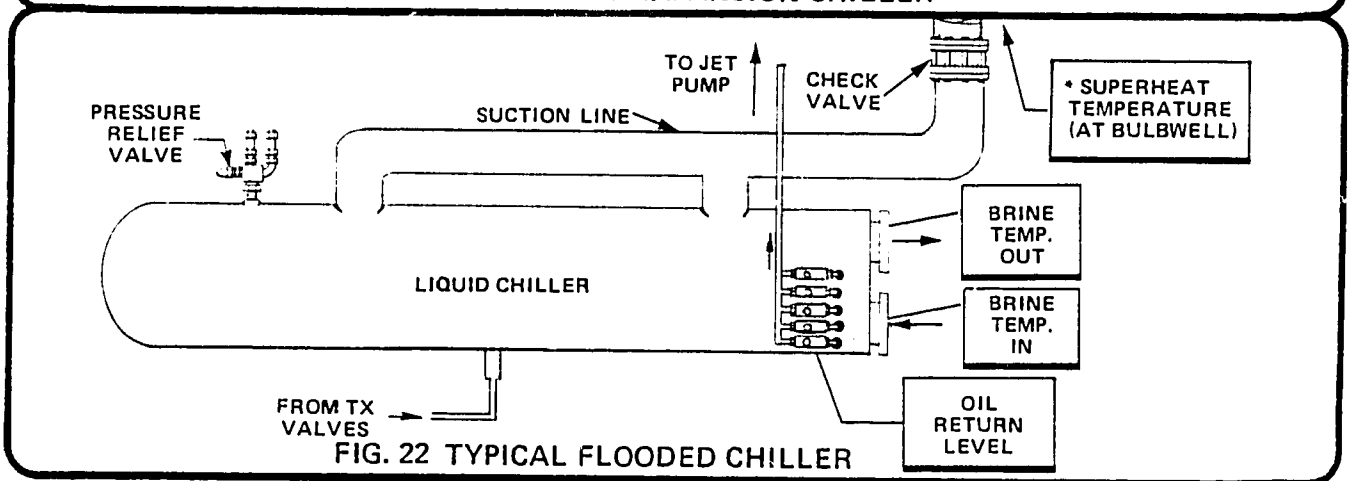

FIG. 22 TYPICAL FLOODED CHILLER

*REFER TO HIGH/LOW SIDE COMPONENT MAINTENANCE SECTION FOR SUPERHEAT TEMPERATURE, PRESSURE, MEASUREMENT LOCATION.

IV. MAINTENANCE

D. OIL REMOVAL/ADDITION

1. RECOMMENDED OILS

Dunham-Bush uses only two viscosity classifications; 150 SUS (Saybolt Universal Seconds) measured at 100°F for low temperature applications and 300 SUS measured at 100°F for high and commercial temperature applications. All other oil viscosities are not approved for use in Dunham-Bush compressors.

NOTE: Mixing of oil is not recommended. Oil should be thoroughly drained and replaced when changing oil brands. Consult factory for any other oil types.

The following Napthenic base oils are recommended.

	SST*	
	Low Temp.	Commercial or High Temp.
	(-40°F to 0°F) (-40°C to -17.8°C)	(+1°F to +50°F) (-17.2°C to +10°C)
COMPANY †	150 SUS (31.8 Cst)	300 SUS (64.6 Cst)
Sun Oil Company	Suniso 3GS	Suniso 4GS
Texaco	Capella B	Capella D

*Saturated Suction Temperature

†These oils are subject to periodic change. Consult the latest edition of National Service Bulletin SR42.

2. APPROXIMATE OIL CHARGES FOR STANDARD PACKAGES

NOTE: Packages with non-standard vessel selections may have different oil charges. The oil capacities listed are for purchasing purposes only. Refer to Oil Replenishment Section for proper oil level.

	APPROXIMATE OIL CHARGE					
	Hermetic		Direct Drive		Direct Drive Heat Reclaim	
Model PCX -	U.S. Gallons	Liters	U.S. Gallons	Liters	U.S. Gallons	Liters
120	26	98.4	21	79.5	24	90.8
150	26	98.4	21	79.5	24	90.8
180	26	98.4	21	79.5	24	90.8
230	27	102.2	24	90.8	28	106.0
290	27	102.2	24	90.8	28	106.0
350	27	102.2	24	90.8	28	106.0
400	30	113.6	35	132.5	-	-
450	-	-	44	166.5	-	-
500	-	-	44	166.5	-	-
580	-	-	45	170.3	-	-
630	-	-	45	170.3	-	-
700	-	-	46	174.1	-	-
750	-	-	47	177.9	-	-

3. OIL REMOVAL

NOTE: If oil from sump has been tested and evaluated to be re-usable, ensure that the container is clean and can be properly sealed to prevent entry of contaminants.

SP-1 *(Oil Removal)*

1. Attach hose between oil sump drain valve and a clean, vented, 55 gallon (200 liters) drum.

2. Drain oil slowly until oil ceases to flow. Oil will foam up

3. Change oil filter(s) (Refer to SP-17)

4. OIL REPLENISHMENT

NOTE: It is desirable to coordinate oil addition with system evacuation so that oil can be drawn in utilizing the partial vacuum. Oil should be drawn into the oil sump during the final stages of evacuation. (Refer to Evacuation/Dehydration Procedures)*(SP-7 thru SP-12)*

SP-2 *(Oil Replenishment, Partial Vacuum Method)*

1. Connect a service hose to the oil sump drain valve and to a vented container of new or re-usable oil.

CAUTION: Hose should be purged with oil and care must be exercised not to incorporate air into the system.

2. Charge sump until oil level in sump is 1/3 to 1/2 of the (top) sight glass. Continue evacuation procedures.

SP-3 *(Oil Replenishment Portable Pump Method)*

CAUTION: For adding oil to a system under pressure, the portable pump should have a design working pressure of 150 to 200 PSIA, (1034.2 to 1379 kPa), and a capability to pump to 150 PSI (1034.2 kPa) from atmospheric pressure. Recommended capacity is 2 to 3 GPM (76 to 114 liters/min.)

NOTE: To facilitate sight glass inspection, a flashlight may be used.

1. With unit off and oil at normal temperature (100°F to 150°F), (37.8°C to 65.6°C), inspect for proper oil level to be at 1/3 to 1/2 of the (top) sight glass; normal level will vary from 1/2 full to just visible at the bottom of the glass.

2. Connect an adequately sized portable oil pump to oil sump drain valve, add oil from vented drum and insure absolutely no air enters the system.

3. Stop pump and close shut off valve when oil level in sump reaches 1/3 to 1/2 of (top) sight glass.

4. Disconnect pump and start-up PCX unit. If oil fails to return to sump causing shutdown due to loss of oil pressure, add additional oil and restart unit.

CAUTION: Do not overcharge system. System problems could result. Added oil must be removed once oil charge is returned to sump.

5. Shut down unit and observe sight glass after unit has stabilized. Drain off excess oil slowly.

E. TRANSFERRING/EVACUATING/CHARGING REFRIG.

CAUTION: All charging/evacuating procedures must only be performed by qualified commercial and industrial refrigeration personnel.

1. CHARGING/EVACUATING STATIONS

Adequate accessibility is provided on all packaged units for charging and evacuating. Careful consideration of the refrigerant state or quality must be employed before opening the valve for charging and evacuating procedures. Access may be obtained to the high and low side through:

- Dual pressure relief valve(s)
- Service shut-off valves (King, Queen Valve)
- Charging valves

CAUTION: Valve caps must be tightened when replacing to prevent refrigerant leakage.

1a. Dual Pressure Relief Valve

Vessels equipped with dual pressure relief valves enable service personnel to obtain access to the refrigerant vapor portion of the chiller or condenser.

FIG. 23 DUAL PRESSURE RELIEF VALVE

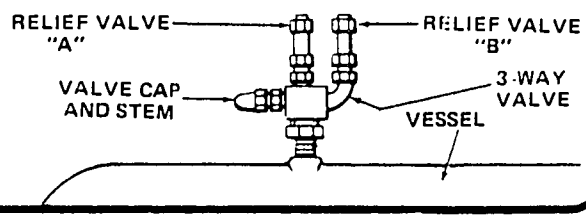

SP-4 *(Relief Valve Access)*

1. Isolate relief valve 'B' by closing off the three way valve stem clockwise until it seats. (See Figure 23)

2. Remove relief valve 'B'.

3. Install a charging hose adaptor in place of the removed relief valve.(adapter not supplied)

4. Connect one end of the hose to the adaptor insuring the hose is purged with refrigerant.

5. Return 3 way valve to original position and follow charging evacuating procedures.

1b. Service Valves

Service valves are located at the filter drier outlet (Queen Valve), and condenser outlet (King Valve) and may be used to obtain access for charging or transferring liquid refrigerant, and evacuating procedures.

SP-5 *(Service Valve Access)*

1. Backseat the valve to isolate plug tap from system.

2. Remove appropriate plug and attach hose.

3. Re-position valve stem and follow Charging/Evacuating Procedures as outlined in this manual

4. Backseat the valve and plug taps.

1c. Charging/Evacuating Valves

Units are equipped with charging valves located either on the suction line or directly on the compressor housing, as noted on the unit piping schematic.

SP-6 *(Charging Valve Access)*

1. Attach hose and purge by opening manual valve.

2 Follow Charging/Evacuating Procedures as outlined in this manual.

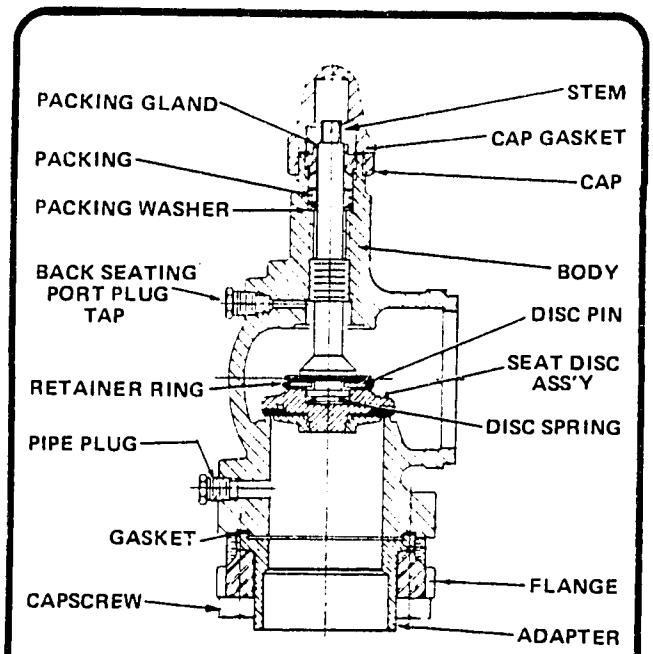

FIG. 24 TYPICAL SERVICE VALVE

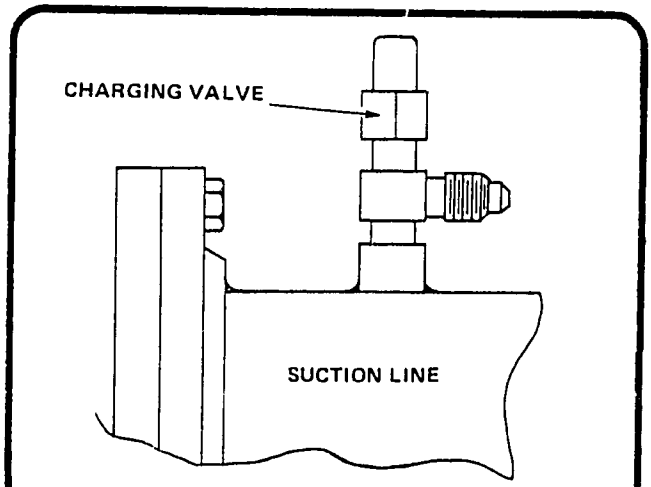

FIG. 25 TYPICAL CHARGING VALVE

2. TRANSFER (PUMPDOWN) OF REFRIGERANT TO CONDENSER OR EXTERNAL CONTAINERS

Most service work can be executed by isolating the component to be repaired, from the system. However, it may be required to pump and temporarily store the refrigerant in the condenser, or remove the charge completely. How the refrigerant is handled, is dependent upon equipment, time available, and the type of maintenance performed. The succeeding procedures SP-7 thru SP-11 must be executed in the order presented. The following must be adhered to for all transfer procedures:

CAUTION: Continuously weigh receiving container to be certain it is not filled more than 85% of its volumetric capacity to allow for thermal expansion.

NOTE: When removing refrigerant to external containers, it is recommended to pack the containers in dry ice.

E. TRANSFERRING/EVACUATING/CHARGING REFRIG.

2a. Partially Pumpdown System

Partially pumping down the system serves to transfer most of the refrigerant from the chiller to the condenser.

> **CAUTION:** Safety controls are not to be defeated or re-adjusted during pumpdown. Compressor motor starts are limited to 3 starts per hour.

SP-7 *(Partial Pumpdown)*

1. With the unit operating, and a partial load available, set the slide valve at minimum load position. Close the condenser shut-off valve (King Valve). If hot gas bypass is installed, close hot gas bypass manual valve recording number of turns.

2. After unit shuts down due to low pressure cut-out, restart unit after 20 minutes elapsed.

3. Unit will cycle off again on low pressure cut-out. The unit is now partially pumped down.

2b. Transfer Liquid Refrigerant From Chiller To Condenser or Containers (Flooded Type Chiller)

The remaining liquid refrigerant and residual oil must be transferred out of the chiller barrel before the gas is transferred.

> **CAUTION:** The chiller pressure must not go below the corresponding freezing point of water, or the brine being used. Approximately 65 to 75 psig (R-22) (448.2 to 517.1 kPa), should be maintained inside the vessel, until it is certain all liquid refrigerant has evaporated. Rapid removal of refrigerant will cause the chiller tubes to freeze and the possibility of bursting them exists. Rapidly boiling refrigerant also foams up the oil, which can freeze lower tubes.

NOTE: It may be helpful to monitor shell temperature beneath the chiller with a thermocouple. Another precaution (flooded chiller models) to avoid freezing is to remove the heads of the chiller and have the tubes fully blown out with compressed air, prior to refrigerant removal.

SP-8 *(Liquid Transfer, Flooded Chiller)*

1. Remove oil (refer to SP-1).

2. Connect a hose to the liquid connection at the bottom of the chiller vessel. Attach in line, a strainer, liquid refrigerant pump, and a sight glass.

3. Purge hose, and connect to the receiver (i.e. condenser, containers). Commence draining, maintaining pressure as much as possible until all the liquid is removed.

2c. Transfer Gas Refrigerant From Chiller To Condenser or Containers

SP-9 *(Gas Transfer From Chiller)*

1. Manually unseat the main expansion valve(s) and open hot gas bypass (if equipped) recording number of turns.

2. Connect the suction side of a portable condensing unit to the low (vapor) side of the system. Connect the discharge hose to the condenser vessel through the dual pressure relief valve (see SP-4) or to an external container.

3. Commence removal of the refrigerant until the suction pressure (chiller pressure) is slightly above atmospheric pressure.

2d. Transfer Liquid Refrigerant from Condenser to External Containers

SP-10 *(Transfer Liquid Refrigerant from Condenser)*

1. Connect a hose to the service valve at the condenser outlet. (See SP-5) Attach an in-line strainer, refrigerant pump and sight glass. Purge line and attach to a clean empty refrigerant container which is marked with the correct type of refrigerant.

2. Commence draining until the first cylinder is 85% full.

3. Remove container and repeat until all liquid refrigerant is removed, without dropping pressure below the corresponding freezing temperature of water.

2e. Transfer Gas Refrigerant From Condenser to External Containers.

SP-11 *(Transfer Gas Refrigerant from Condenser)*

1. Connect the suction side of a portable condensing unit through the condenser relief valve access. (See SP-4) Connect the discharge hose of the portable condensing unit to an external container.

2. Commence removal of refrigerant gas until the condenser vessel pressure is slightly above atmospheric pressure.

3. COMPLETE SYSTEM EVACUATION AND DEHYDRATION

For a complete system evacuation, it will be necessary to make up a manifold and evacuate from three evacuating stations simultaneously.

NOTE: It is absolutely necessary to use a true micron gauge. An ordinary compound gauge is not acceptable.

SP-12 *(Evacuation/Dehydration)*

1. Drain oil (refer to SP-1).

2. Transfer refrigerant to external containers (refer to SP-7 thru SP-11)

3. Pressure test the unit with dry nitrogen and R-22 to insure no leaks exist. (Refer to SP-37)

4. With the unit at atmospheric pressure, connect a vacuum pump to the system. Manually unseat the main expansion valve(s) and open hot gas bypass valve (if equipped).

5. Evacuate to 1,000 microns and break vacuum with dry nitrogen and R-22.

6. Change filter drier elements. (Refer to SP-29).

System Evacuation – continued

NOTE: To achieve best results, warm water or warm air should be recirculated through the water side of the evaporator and condenser.

7. System must be dehydrated down to 1,000 micron level at least three times, initially leaving vacuum pump on system at least 12 hours. Break vacuum twice with dry nitrogen. On final pull down to 1,000 microns, or lower, system pressure must not rise above 2,000 microns in four hours with vacuum pump isolated from system.

8. Fill oil sump with clean oil after third pull down utilizing the partial vacuum to draw in the oil. (Refer to SP-2)

9. Turn on oil heaters upon completion of dehydration. Break vacuum with dry refrigerant vapor.

4. CHARGING THE REFRIGERANT SYSTEM

When charging a fully evacuated system, the unit must be 1) gas charged initially, 2) liquid charged to 90% of design charge capacity and 3) charged under operation to full design charge capacity, as noted on the nameplate located at the control panel.

4a. Initial Gas Charging the Refrigerant System

NOTE: This is the initial procedure for charging a fully evacuated system, with the oil at the proper level.

> CAUTION: Refrigerant gas must be charged until the internal system pressure corresponds to an evaporating temperature above freezing (R-22, 70 PSIG) (482.6 kPa), before liquid is charged. This will prevent freeze-up and bursting of tubes.

> CAUTION: Chiller and condenser water pumps must be running and must maintain a minimum of 50% water flow.

SP-13 *(Initial Gas Charging)*

1. Manually unseat the main thermal expansion valve(s)

2. Slowly gas charge (2 PSI/minute) (13.79 kPa/min) at:
   a. Condenser vessel
   b. Chiller vessel

3. Continue gas charging until the pressure is stable throughout the system at a safe level. (R-22:70 PSIG 482.6 kPa).

4b. Liquid Charging the Refrigerant System

NOTE. This procedure is for charging a unit that has a system pressure above the corresponding freezing temperature of water. Liquid refrigerant can be charged directly into an evacuated system only if water is drained thoroughly and the tubes (flooded chiller) or the shell (direct expansion chiller) have been fully blown out with compressed air.

> CAUTION: Chiller and condenser water pumps must be running and must maintain a minimum of 50% water flow.

SP-14 (Liquid Charging the System)

1. Purge and connect a charging hose from refrigerant containers to the King valve (refer to SP-5).

2. Liquid charge condenser, exchanging containers until 90% of design charge is in the system. A liquid refrigerant pump may be employed. Insure a liquid seal exists in the liquid line to the thermal expansion valve(s) by observing the sight glass.

3. The remaining refrigerant must be charged while the system is operating (refer to SP-15).

4c. Adding to Refrigerant Charge

This procedure is used when an inadequate charge is suspected. Typical indications of an inadequate charge are bubbles in sight glasses (vaporized refrigerant), high suction pressure, high oil temperature, etc. Indications of an adequate charge at 100% load are:

- Discharge Superheat – Must maintain between 25°F (13.9°C) and 30°F (16.7°C) above saturated conditions.
- Refrigerant Quality – Moisture indicator sight glasses should be clear of bubbles when system is fully charged.
- Condenser Outlet Temperature (Subcooling) – System will maintain approximately 8°F to 10°F (4.4°C to 5.6°C) below saturated conditions when refrigerant charge is adequate.
- Oil Temperature (Water Cooled Oil Cooler, if equipped) – Oil temperature must be maintained at 110°F to 120°F (61.1°C to 66.7°C) entering compressor.
- Liquid Injection Feed (if equipped) – Liquid seal exists in feed line at sight glass.

  NOTE: It may be helpful to liquid charge the liquid injection line independently to initiate normal operation.

- Seal Oil Cooler Feed (Direct Drive Models) – Liquid seal exists in feed line entering cooler.

  NOTE: It may be helpful to liquid charge the feed line to the seal oil cooler independently to initiate normal operation.

SP-15 *(Adding to Refrigerant Charge)*

1. Manually set and hold compressor slide valve at 25% position using temperature load control (TLC) manual control selection switch.

> CAUTION: Partial cooling load must be available to manually position slide valve to prevent shut-down from safety controls.

2. Connect container of the design refrigerant to the low side of the system.

3. Start-up PCX unit, open drum, valve and gas charge system until above conditions are met.

1. COMPRESSOR/MOTOR ASSEMBLY

1a. Compressor

All inspection, maintenance, or repairs of the compressor must be done by an authorized, qualified Dunham-Bush, Inc. Service Representative as listed in the latest edition of Form Number 9822. If the customer has any reason to suspect a problem, he should contact the Dunham-Bush Service Representative for assistance. Failure to comply may jeopardize the warranty. Repair information may be found in the latest edition of the DBX Compressor Service Manual, Form No. 6136.

1b. Compressor Motor

The primary maintenance required on the hermetic compressor motor is to perform an insulation resistance test at periodic intervals. A permanent record of the megger test will serve to show any approaching motor problems. (Refer to SP-36) Direct drive motors must be lubricated per manufacturer's specifications and periodic insulation resistance tests are also recommended.

1c. Coupling Alignment

Shafts become misaligned as a result of many natural and unavoidable causes. Heat, vibration, bearing wear, the settling of foundations, etc., all tend to alter alignment. Periodic checks of the compressor coupling is recommended.

NOTE: The coupling should be hot when making alignment adjustments. Also the motor should be aligned to the compressor.

SP-16 *(Compressor Coupling Alignment)*

1. To check angular misalignment (Figure B) mount indicator (as shown on left flange) with stem on face of right flange. Rotate Equipment noting maximum and minimum indicator reading. Move equipment as necessary to reduce the total indicator reading to that shown below.

2. To check parallel misalignment (Figure C) set indicator stem on outer surface of flange. Rotate equipment noting maximum and minimum indicator reading. Move equipment as necessary to reduce indicator reading to that shown below. Be careful not to disturb the setting of Step 1.

NOTE: If it is necessary to remove the motor alignment pins, the motor should be repinned after the alignment corrections are made.

3. Repeat Steps 1 and 2 as necessary.

4. Coupling hubs to be spaced to dimension C, as shown in the table below.

5. This coupling should be rotated several revolutions to make sure no "endwise creep" in connected shafts is measured.

6. Tighten all bolts as shown in chart below.

7. When operating at full speed,both laminated rings should have a distinct and clearly defined appearance not blurred when viewed from top and side.

1d. Motor Housing Heaters (Hermetic Units)

No maintenance is required on compressor housing heaters, except for replacement, if the heater element should fail.The heater may be removed from the housing, or well without disturbing the charge. There are two types of compressor housing heaters. The housing mounted type (heater pad) which requires a temperature resistant epoxy for installation, and a well type (insertion) which requires no other agent for assembly. All electrical service connections must be disengaged prior to installation. Refer to the unit wiring diagram.

FIG. 25 - COUPLING ALIGNMENT

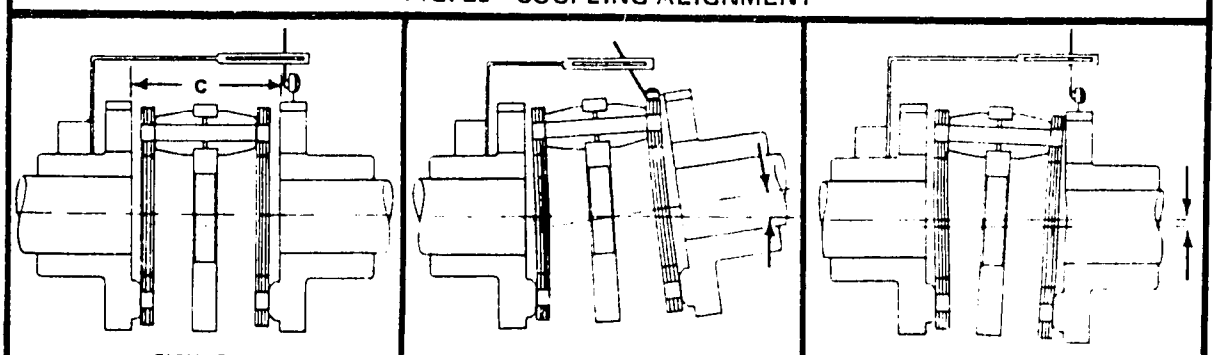

FIGURE 25A
COUPLING IN ALIGNMENT

FIGURE 25B
TEST FOR ANGULAR MISALIGNMENT

FIGURE 25C
TEST FOR PARALLEL MISALIGNMENT

THOMAS COUPLING SERIES	FORM-FLEX COUPLING SERIES	BOLT TORQUE				MISALIGNMENT (TIR)				DIMENSION C (SEE FIG. A)	
		THOMAS		FORM-FLEX		PARALLEL		ANGULAR			
		(Ft.-Lb.)	(kg-m)	(Ft.-Lb.)	(kg-m)	(In)	(mm)	(In)	(mm)	(In)	(cm)
163 DBZ-B	-	13	1.8	-	-	0.003	0.076	0.003	0.076	2 7/16	6.19
201 DBZ-B	-	25	3.5	-	-	0.005	0.127	0.005	0.127	2 15/16	7.46
226 DBZ-B	AK 30	43	6.0	40	5.5	0.005	0.127	0.005	0.127	3 13/16	9.68
263 DBZ-B	AK 35	63	8.7	40	5.5	0.007	0.178	0.007	0.178	4 5/16	11.0
301 DBZ-B	AK 40	95	13.1	80	11.1	0.007	0.178	0.007	0.178	4 7/8	12.38
351 DBZ-B	AK 45	175	24.2	80	11.1	0.007	0.178	0.007	0.178	5 7/8	14.90
350 - 51	-	95	13.1	-	-	0.007	0.178	0.007	0.178	6	15.24

1. Consult factory for complete engineering specification ASY-ES-1 , if additional information is required.
2. TIR = Total Indicator Reading.
3. Compressor alignment data is subject to periodic change. Consult latest National Service Bulletin SR-109.

2. OIL SYSTEM COMPONENT MAINTENANCE

2a. Oil Filter Replacement

The need for replacement of the oil filter may be determined by measuring the pressure drop across the filter (6 psid [41.4 kPa] maximum). The normal pressure drop with a new element is 1 to 2 psid (6.9 to 13.8 kPa). Some units are equipped with an indicator for ths purpose.

FIG. 26 HORIZONTAL TYPE OIL FILTER

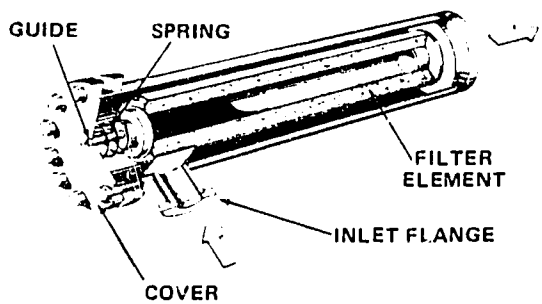

P-17 *(Oil Filter Replacement)*

1. With the unit off, close the oil filter service valves at the inlet and outlet sides of the oil filter assembly to be serviced.

2. Vent filter housing into a gallon (3.8 liters) container. Oil will foam up.

3. Remove cover (enclosure; vertical type), by evenly backing out the bolts.

NOTE: Do not cock cover (enclosure). Spring is in compression with the filter elements.

4. Remove filter element guide. Remove and inspect oil filter cartridge for metallic particles, babbitt or unusual amounts of dirt or sludge. Remove old gaskets (O-Ring).

5. Clean interior of oil filter housing with a lint free wiping cloth.

6. Inspect new oil filter element to ensure that the element is free from damage, and install new oil filter element. Ensure that the element is seated properly.

7. Install cover (enclosure) with new gasket or "O" Ring if necessary. Torque bolts evenly.

8. Purge oil filter thoroughly and open isolation shut off valves.

9. With unit operating, test for any leakage.

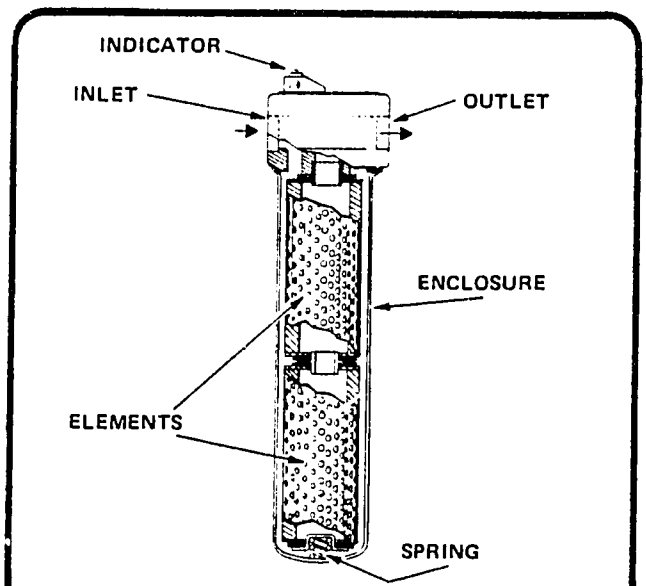

FIG. 27 VERTICAL TYPE OIL FILTER

2b. Oil Pump/Motor Assembly

The oil pump, whether direct drive or hermetically sealed are designed for long trouble free life, with a minimum of maintenance.

Hermetic pump applications require oil sump draining to obtain access to the pump assembly. External pumps may be serviced in-line. Anticipated maintenance for the pump assembly are:

- End Clearance Adjustment
- Motor coupling alignment (direct drive oil pump)
- Oil pump suction strainer cleaning

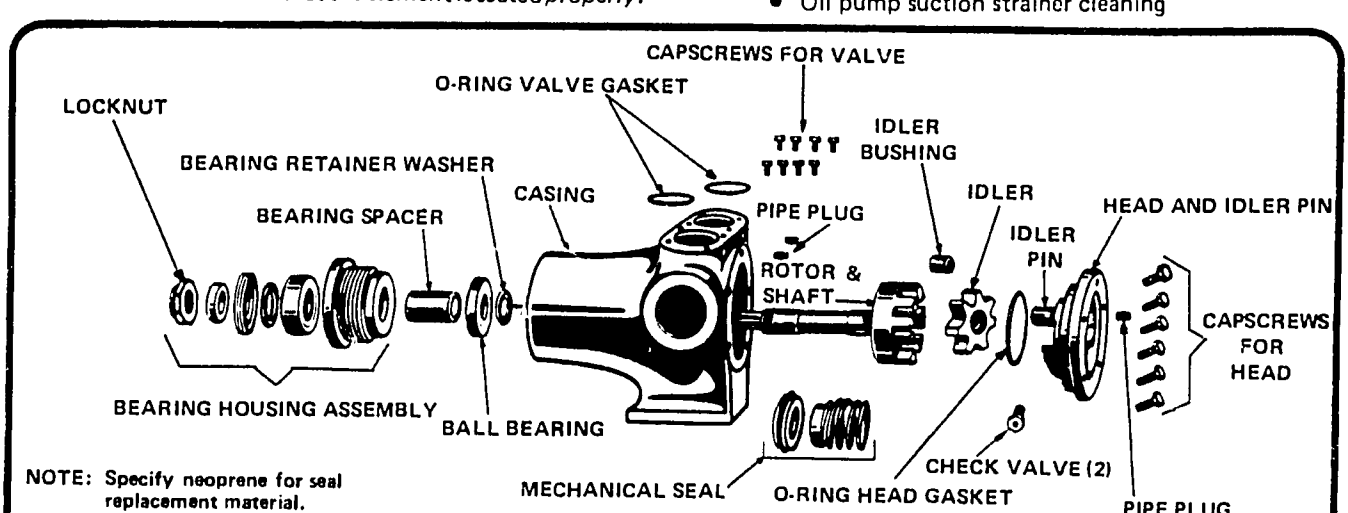

NOTE: Specify neoprene for seal replacement material.

FIG. 28 TYPICAL EXTERNAL TYPE OIL PUMP

F. COMPONENT MAINTENANCE CONTINUED

SP-18 *(Coupling Alignment, Direct Drive Oil Pump)*

1. Disconnect electrical service

2. Check parallel alignment by placing a straight-edge across the two coupling flanges and measuring the maximum offset at various points around the periphery of the coupling. Do not rotate the coupling. If the maximum offset exceeds the figure shown under parallel, realign the coupling.

3. Check angular alignment with a micrometer or caliper. Measure from the outside of one flange to the outside of the other at intervals around the periphery of the coupling. Determine the maximum and minimum dimensions. Do not rotate the coupling, the difference between the maximum and minimum must not exceed the figure given under "angular". If a correction is necessary, be sure to recheck the parallel alignment.

NOTE: For maximum life, keep misalignment values as near to zero as possible.

NET MAX. ALIGNMENT VALUES (EXTERNAL OIL PUMP)				
(Type N) Sleeve Size	Parallel		Angular	
	In.	cm	In.	cm
6	0.015	0.038	0.070	0.178
7	0.020	0.051	0.081	0.206
8	0.020	0.051	0.094	0.239
9	0.025	0.064	0.109	0.277

SP-19 *(End Clearance Adjustment, Direct Drive Oil Pump)*

1. Disconnect electrical service to oil pump.

2. Loosen set screws on bearing housing.

3. Counterclockwise rotation of the bearing housing will increase end clearance. Two notches on the bearing housing represent approximately 0.003 in. (0.076mm).

CAUTION: Be sure the shaft can be rotated freely and the set screws are tightened securely.

4. Align coupling and reconnect electrical service.

SP-20 *(Maintenance, Hermetic Oil Pump)*

1. Partially pumpdown unit. (Refer to SP-7)

2. Drain oil from oil sump housing into 55 gallon (208.2 liters) container. (Refer to SP-1)

3. Disconnect all electrical connections and properly tag.

4. Attach a calibrated pressure gauge to both high and low side to determine if the check valve has properly seated.

5. With sump at atmospheric pressure, remove the oil pump assembly. With sump/separator assemblies, remove separator mesh and clean with R-11. Inspect for damage and wear. Replace if required.

6. Remove motor rotor, inspect rotor and stator for wear marks. Inspect bearings for wear. If any wearing is evident, repair/replace pump assembly.

7. If original pump assembly is to be replaced, check rotor end clearance and insure clearance is to 0.002 to 0.003 in. (0.051 to 0.076 mm).

8. Assemble new or cleaned oil pump strainer to pump assembly using the existing connector tube assembly and attaching hardware, install pump assembly and O-ring using lifting eye bolt. Care should be taken to prevent damaging pump strainer. Use of two guide pins to support pump on its flange will aid in assembly.

9. Reconnect piping and electrical connections. Fill oil sump (refer to SP-2 and SP-3).

FIG. 29 TYPICAL HERMETIC TYPE OIL PUMP

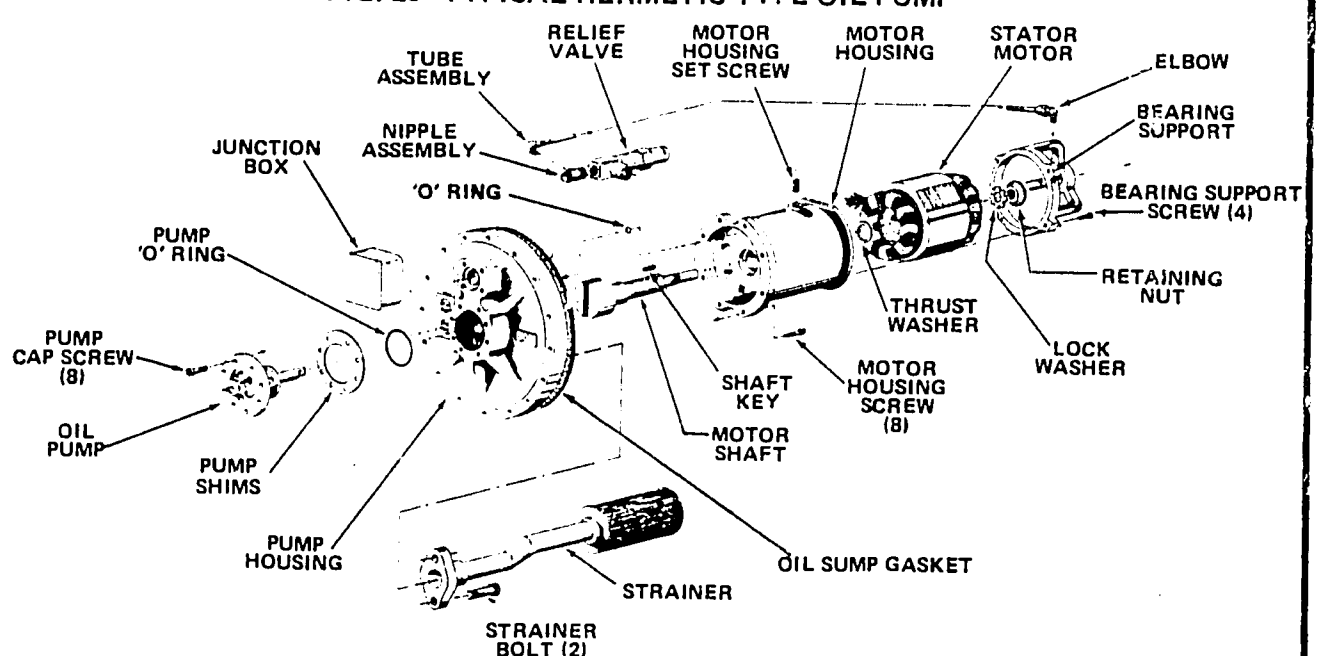

F. COMPONENT MAINTENANCE CONTINUED

2c. Oil Pressure Relief Valve

CAUTION: Problems seeming to require oil pressure relief valve adjustments can usually be traced to other items, such as plugged oil filters, worn pump, improper pump end clearance, a plugged or dirty seat, and/or a damaged seat.

- **Hermetic Type** - The hermetic type oil pressure relief valve is factory pre-set to crack open at 54 PSIG (372.3 kPa) pressure at the compressor, 100% load .

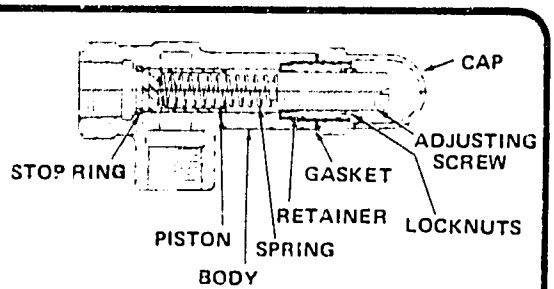

FIG. 30 TYPICAL HERMETICALLY LOCATED PRESSURE RELIEF VALVE

- **External Type** - The external type in-line oil pressure regulating valve is factory set to crack at 35 to 42 psig (241.3 to 289.6 kPa) (pressure at compressor, 100% load).

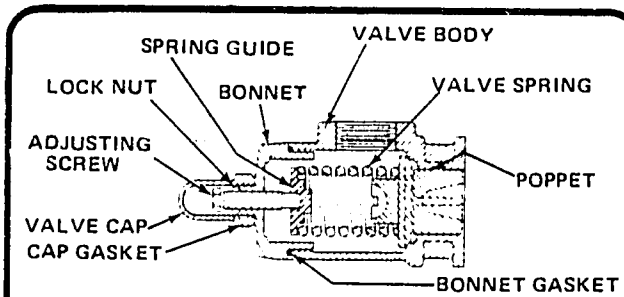

FIG. 31 TYPICAL EXTERNALLY LOCATED PRESSURE RELIEF VALVE

SP-21 *(Oil Pressure Relief Valve Adjustment)*

1. Remove the valve cap which covers the adjusting screw, and loosen the locknut(s), which locks the adjusting screw so the pressure setting will not change.

2. The adjusting screw should be turned in for increasing the pressure that the relief valve will open.

3. Adjust to design conditions.

SP-22 *(Oil Pressure Relief Valve Disassembly)*

1. Remove valve cap.

2. Measure and record length of extension of the adjusting screw.

3. Loosen the locknut(s) and back out adjusting screw until spring pressure is released.

4. Remove part components, clean and inspect for wear or damage. Repair or replace as necessary.

2d. Oil Sump Heaters

No maintenance is required on oil sump heaters, except for replacement, if the heater element should fail. The heater may be removed from its well without disturbing the oil or charge.

SP-23 *(Replacement of Oil Sump Heaters)*

1. With the power off, disconnect electrical cable and wiring.

2. Remove the oil sump heater element from the oil sump flange.

3. Install new oil sump heater element to the oil sump well.

4. Reconnect wiring and electrical cable.

2e. Evaporator Oil Return (Flooded Chiller, Low Temp. Direct Expansion Chiller)

The jet pump oil return taps on the chiller vessel are factory pre-set to design conditions. However re-adjustment may be needed after installation.

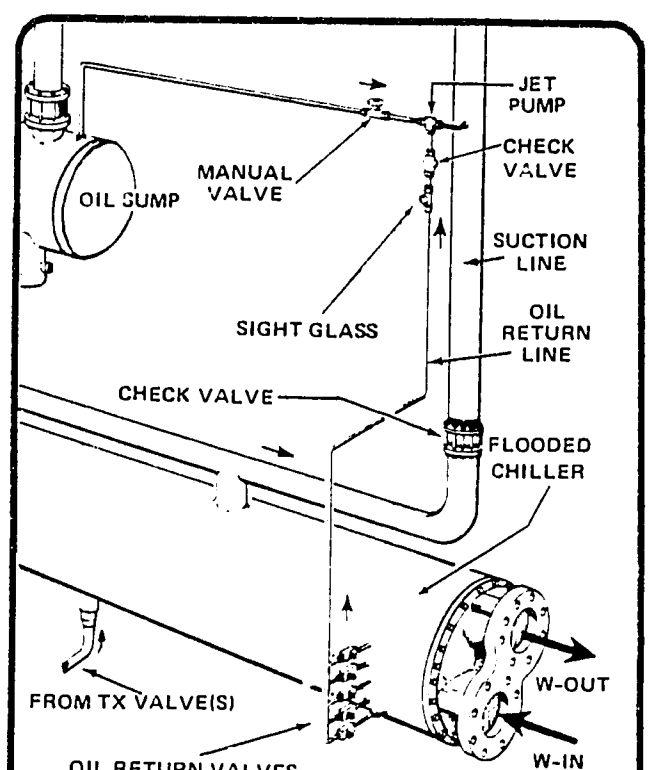

FIG. 32 TYPICAL EVAPORATOR OIL RETURN

- **Adjustment (Flooded Type)** - Once the maximum and minimum liquid refrgerant levels are established, adjustment may be made. All dip tubes that are within the liquid operating range are to remain fully open. All dip tubes that are never exposed to liquid refrigerant are to remain closed, to prevent capacity reduction. If extended pulldown is anticipated, the lowest dip tube should remain fully open.

- **Adjustment (Direct Expansion Type)** - Valve is to remain fully open on dip tube.

3. OIL COOLING SYSTEM MAINTENANCE

3a. Liquid Injection Oil Cooling System

FIG. 33 TYPICAL LIQUID INJECTION OIL COOLING SCHEMATIC

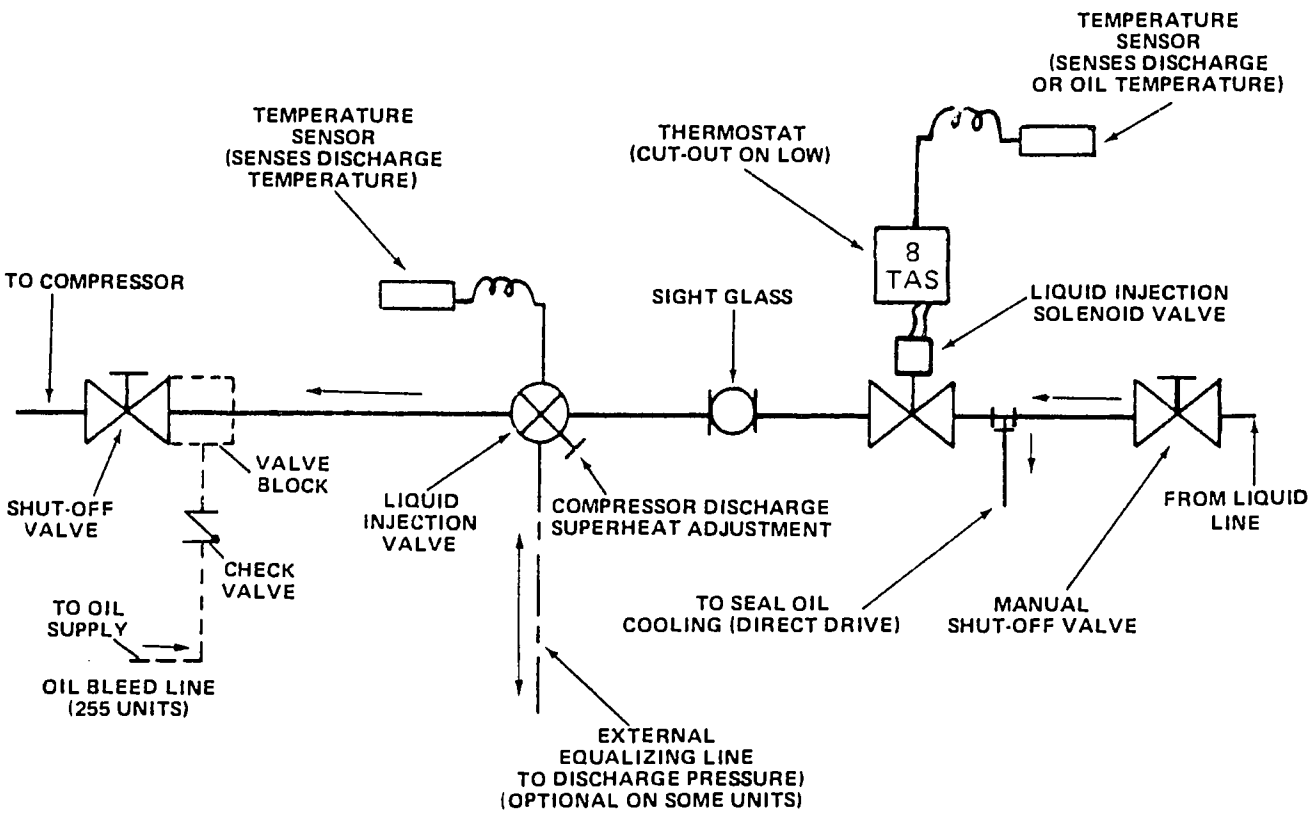

- **Normal Operation** - This system is designed to hold the oil temperature to the compressor inside the 135°F to 200°F (57°C to 93°C) range under all conditions of operation. This is done by a combination of controls. The liquid injection valve is factory adjusted to provide 40°F to 50°F (22°C to 28°C) discharge superheat at 100% load and design head pressure. That is the discharge temperature that will be controlled at 40°F to 50°F (22°C to 28°C) above saturated discharge temperature.

EXAMPLE: At 105°F (41°C) condensing temperature and 100% load, the discharge temperature will be controlled at 145°F to 155°F (63°C to 68°C) at 100% load. At 115°F (46°C) condensing temperature the discharge temperature will be controlled at 155°F to 165°F (68°C to 74°C) at 100% load.

At low loads, the superheat provided by the liquid injection valve will decline to approximately 25°F (14°C) and in the usual system the head pressure will also rebalance lower.

EXAMPLE: 10% load, 90°F (32°C) C.T. the liquid injection valve will control at 115°F (46°C). It is preferable to maintain a higher value to prevent oil dilution, so under these conditions, the thermostat will cycle the solenoid valve to maintain 140°F ± 5°F (60°C ± 3°C) oil temperature.

> **CAUTION:** The thermostat setting should not be altered in the field. If the unit is stopped by the thermostat, the cause should be determined and corrected.

- **Abnormal Operation** - If the liquid injection valve fails in the closed position the unit will cycle off on the oil temperature thermostat, or the oil pump motor thermostats (or hermetic motor inherent protector, where applicable). If the liquid injection valve fails in the open position, the thermostat and solenoid will take over control until the liquid injection valve can be repaired.

- **Settings** - Thermostat: As noted on the unit job wiring diagram. TX Valve: Adjusted to maintain 40°F to 50°F (22°C to 28°C) above saturated discharge temperature (100% load, design conditions) minimum.

NOTE: Heat transfer paste must be used in the bulbwell.

3b. Water Cooled Oil Coolers

The water cooled oil coolers require periodic cleaning of the water side to assure maximum efficiency. It is recommended that the tubes are cleaned out at the same time that the condenser is cleaned. (Refer to Condenser Maintenance)

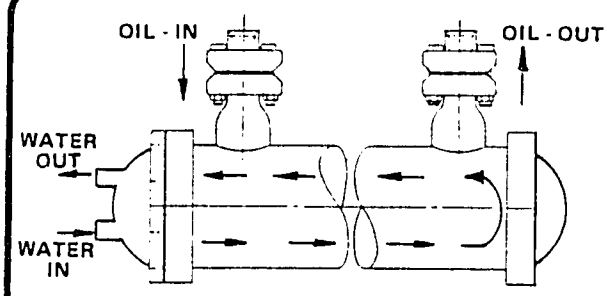

FIG. 34 TYPICAL TWO-PASS WATER COOLED OIL COOLER

- **Oil Cooler Water Regulating Valve** - These valves are factory adjusted but may require periodic re-adjustment if too high an oil temperature occurs that is not attributed to oil cooler fouling or oil pump problems. This valve should also be flushed out when the oil cooler is cleaned.

SP-24 *(Oil Cooler Water Regulating Valve Adjustment)*

1. To raise the temperature opening point, turn adjusting screw counterclock wise; to lower the temperature opening point, turn adjusting screw clockwise.

NOTE: Temperature closing point of valve is non-adjustable. Temperature actuated valves close approximately 3°F to 5°F (1.7°C to 2.8°C) below opening point.

SP-25 *(Oil Cooler Water Regulating Valve Flushing)*

1. Lift range spring follower with screwdrivers at two sides of lower spring cap to open valve.

2. Backflush oil cooler, holding valve open (this procedure should not affect valve adjustment).

3c. Seal Oil Cooler System (Direct Drive Models)

> CAUTION: The thermostat setting should not be altered in the field. If the unit is stopped by the thermostat, the cause should be determined and corrected.

- **Normal Operation** - This system is designed to hold the temperature of the oil being pumped to the seal to 115°F ± 5°F (46°C ± 3°C), under all conditions of operation by adjustment of its thermal expansion valve.

- **Abnormal Operation** - If the temperature operated expansion valve fails in the closed position, the unit will cycle off from the oil temperature thermostat, which senses the oil temperature out of the seal oil cooler. If the temperature operated expansion valve fails in the open position, the heat exchanger may flood through and the oil will be overcooled. The seal oil cooling system in conjunction with the liquid injection system will not perform properly if flashing liquid is supplied to the expansion valves.

- **Settings** - Thermostat: 130°F (54.4°C) cut out, 127°F (52.8°C) cut in. Temperature operated expansion valve: 115°F ± 5°F (46.1°C ± 2.7°C) oil temperature at bulbwell.

SP-26 *(Seal Oil Temperature Adjustment)*

NOTE: When adjusting the temperature setting on the thermal expansion valve to maintain seal oil temperature time must be allowed for the system to react and stabilize before further adjustment.

1. With a thermo-couple properly insulated and orientated at the thermal expansion valve bulbwell (on oil line) monitor the oil temperature.

2. Clockwise rotation of the temperature adjustment will lower oil temperature. Adjust accordingly.

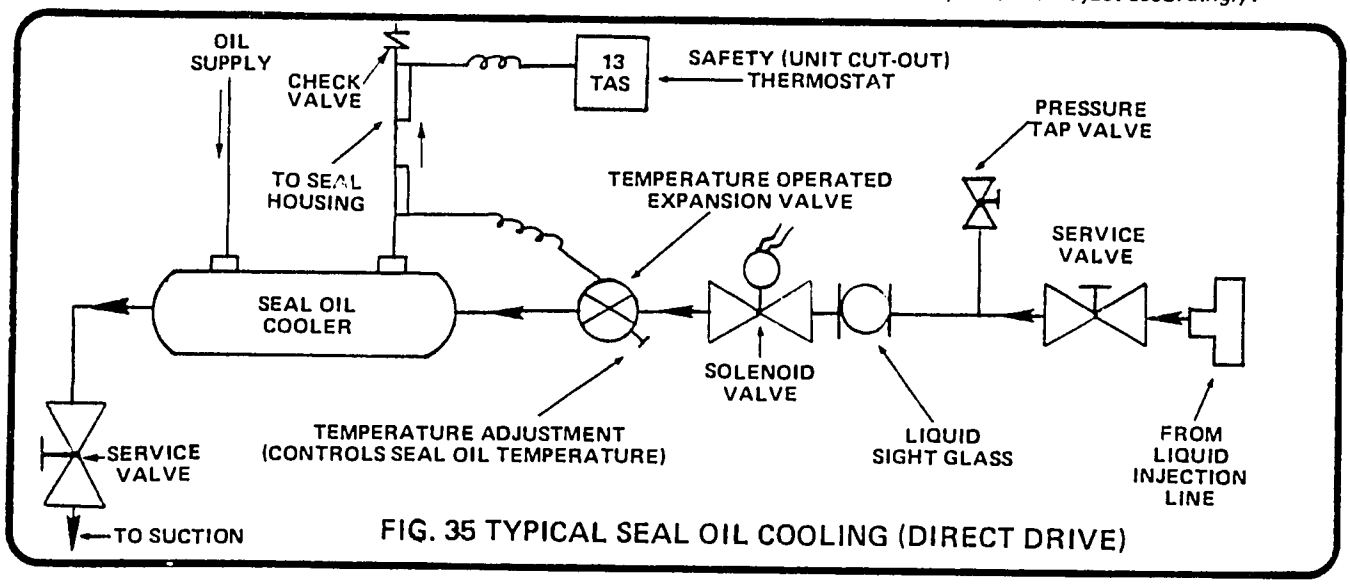

FIG. 35 TYPICAL SEAL OIL COOLING (DIRECT DRIVE)

4. HIGH/LOW SIDE COMPONENT MAINTENANCE

4a. Condenser Cleaning

To assure optimum efficiency, the condenser water tubes should be cleaned of scale, sludge, and slime deposits. Individual water conditions will determine how often the tubes are cleaned. One indication of tube fouling, is rising condensing pressures not attributed to air or other causes. There are two methods of tube cleaning.

1. Mechanical - Using brushes to remove loose material deposits.

2. Chemical - Flushing solvent to remove scale deposits.

NOTE: It is recommended that only a reputable professional chemical cleaning organization be used for the cleaning of the condenser. Damage could result to the heat exchanger from the use of an improper, solution or from exposure for too long a period.

SP-27 *(Mechanical Cleaning of Condenser)*

NOTE: Head gaskets need not be renewed after each head disassembly operation. Gasket must be replaced if it is physically disfigured or otherwise deteriorated.

1. Isolate water side of condenser, vent, drain and remove heads.

2. Remove loose material which has settled in the tubing with brushes. Flush thoroughly with fresh water, drain and restore heads and piping to vessel, torquing nuts evenly. Insure no entrapped air exists by venting high points of water system.

4b. Condenser Tube Plugging

Plugging has long since been accepted as standard service procedure. A maximum 5% of the total number of tubes may be plugged. The recommended method of repair can be performed without pumping out the refrigerant if due care is exercised.

SP-28 *(Tube Plugging)*

1. With unit off, shut down the condenser water flow.

2. Drain condenser water supply and return piping and remove both heads.

3. Conduct leak test (refer to SP-37)

4. Drill and tap tube sheet for 1/2 inch pipe plug or tapered plug and plug accordingly.

5. Install heads, with new gaskets if required. Connect water piping and fill condenser water supply.

6. Start pump and vent water system of entrapped air at high points of piping, and at vessel heads.

7. Add to refrigerant charge if necessary. (Refer to SP-15)

8. Check moisture indicators for evidence of water and change filter drier elements if necessary.

- **Condenser Relief Valves** - The condenser relief valve is adjusted and sealed at the factory. No maintenance is anticipated. However, if the relief valves do blow off at the design pre-set pressure, the cause should be determined and the relief valves should be replaced if they do not properly re-seat.

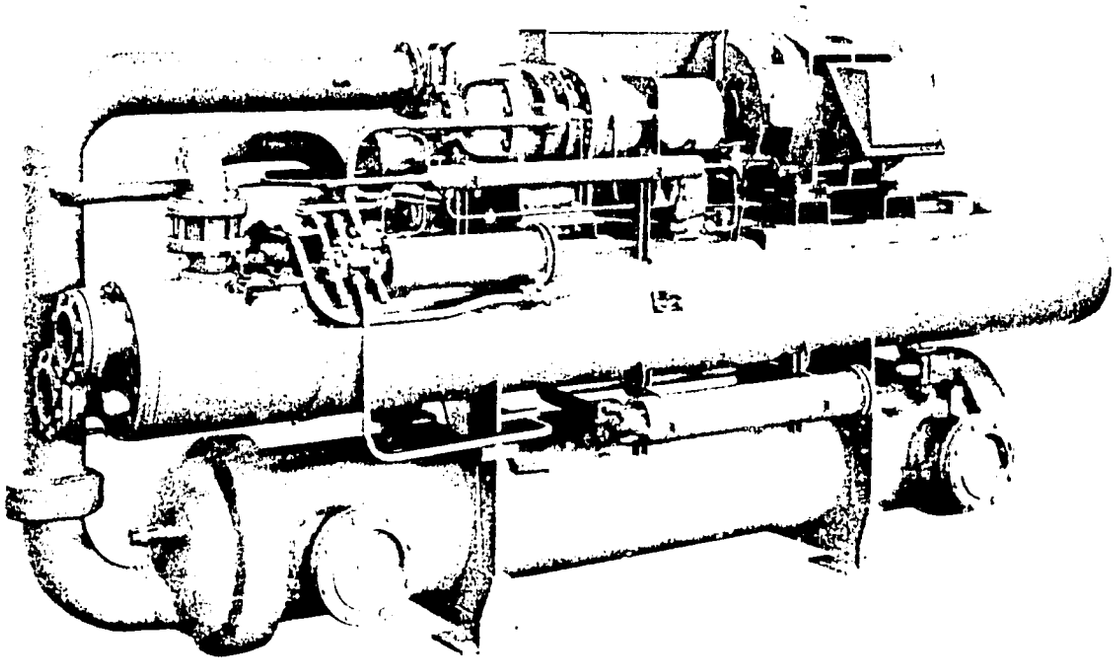

PCX-O DIRECT DRIVE PACKAGED CHILLER

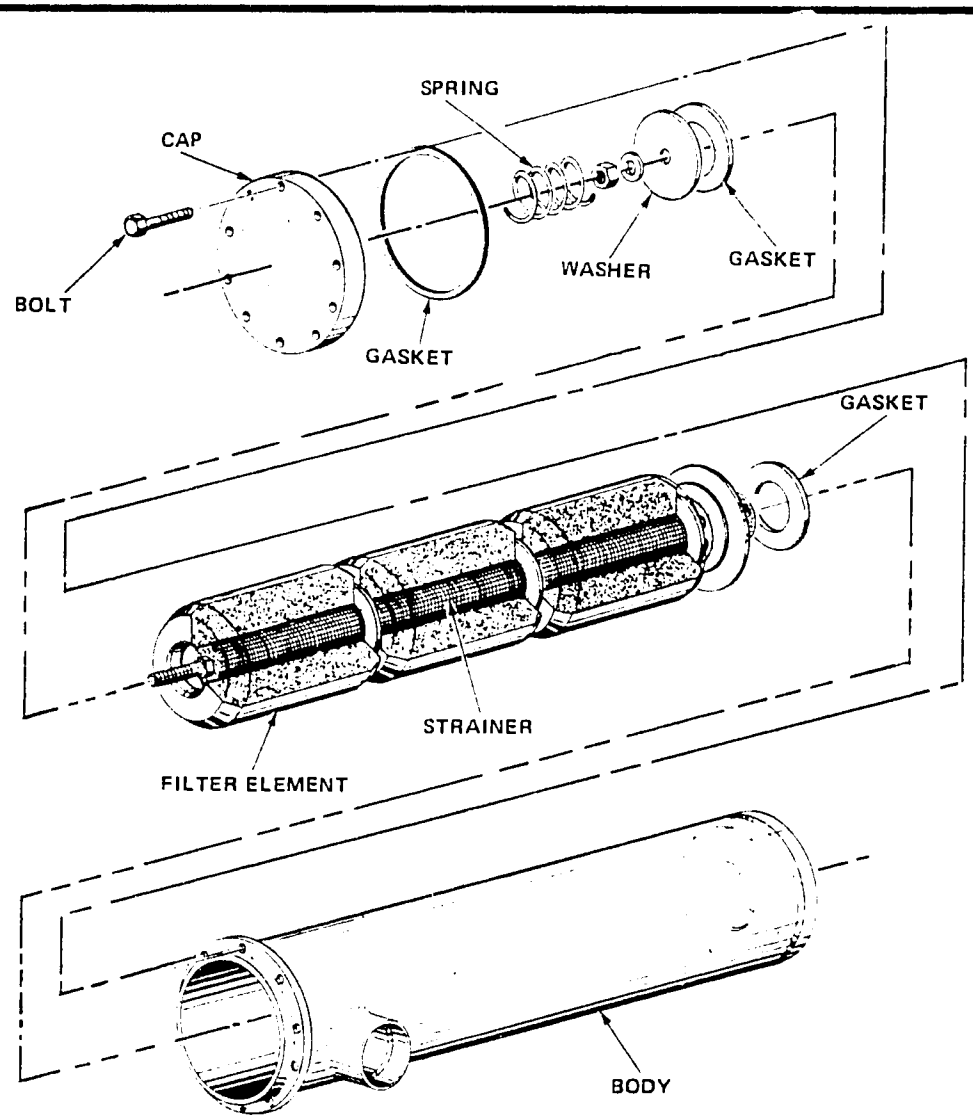

FIG. 37 TYPICAL REFRIGERANT FILTER DRIER

4c. Filter Drier Replacement

The filter drier elements should be replaced at scheduled intervals, when a specific maintenance action requires, or when moisture is evident in the system. The maximum operational pressure drop across the filter drier is 5 PSI (34.5kPa)..

SP-29 *(Filter Drier Replacement)*

1. Partially pumpdown system (Refer to SP-7)

2. Close both manual shut-off valves to isolate the filter drier.

3. Slowly vent enclosure to atmospheric pressure by opening plug.

4. Disassemble the drier assembly, discarding the cartridge elements and gaskets. Remove bolts evenly as spring is in compression to flanged cover.

5. Clean the housing and internal parts thoroughly. Inspect for damaged or deteriorated parts. Replace as needed.

6. Assemble the filter drier and torque bolts evenly.

7. Purge drier assembly and open isolation valves.

8. With the unit operating, check for leaks with a leak tester.

Once every two years, an inspection of the chiller tubes should be made, and the tubes cleaned if necessary. (flooded chiller models, clean inside tubes; direct expansion chiller models, clean outside of tubes).

4d. Cleaning Chiller

Because the chiller water or brine is a closed system, less frequent cleaning of the chiller tubes is required.

4d. Cleaning Chiller - continued

NOTE: It is recommended that only a reputable professional chemical cleaning organization be used for the cleaning of the chiller. Damage could result to the heat exchanger from the use of an improper solution, or from exposure for too long a period.

- **Chiller relief valve(s)** - The chiller relief valve is adjusted and sealed at the factory, no maintenance is anticipated. However, if the relief valve does blow-off at the design pre-set pressure, the cause should be determined and the relief valve should be replaced if it does not properly re-seat.

4e. Brine Maintenance

The chiller cooling medium must be periodically checked and maintained at design percent concentration, for a freeze point at least 10°F (6°C) below minimum saturated evaporator temperature. The actual freeze point may be determined by obtaining the specific gravity (with a hydrometer) and the temperature of the brine. With this data obtained, the percent concentration and freeze point may be determined from curves available from the brine manufacturer.

WARNING The factory is not responsible for damage due to chiller freeze-up as a result of negligent periodic maintenance of brines.

- **Chloride Brines** - In addition to proper freeze point, chloride brines require special precautions. A rust inhibitor must be used in adequate quantity and the brine PH must be checked and adjusted periodically to prevent potential chiller corrosion. Brine PH must be maintained between 7.5 and 8.0 and must be adjusted before filling chiller.

NOTE: Consult brine manufacturer or a professional agency for mixing the solution, adjusting PH, and proportioning the rust inhibitor.

4f. Pilot Thermo Valve

The pilot thermo valve is located on a branch liquid line and is used in conjunction with the pilot operated solenoid thermal expansion valve. The pilot thermo valve is factory pre-set to maintain 10°F to 15°F (5.6°C to 8.3°C) superheat (direct expansion chillers) or 0 to 5°F (0 to 2.8°C) superheat (flooded chillers). Superheat is the temperature increase of the refrigerant gas above the saturation temperature at the existing pressure. The superheat setting can be re-adjusted, if required, to improve system performance.

- **Pressure and Temperature Measurement** - The suction gas temperature should be measured on the suction line at the pilot thermo valve bulbwell and must be insulated from ambient air temperature. Units that locate the bulb in the leaving chilled water or brine flange require temperature measurement on the suction line halfway up the vertical riser on the side of the pipe.

CAUTION: The orientation of the thermocouple is critical for temperature measurement. Do not locate the thermocouple on any elbows.

The pressure may be measured by installing a calibrated gage at a gage connection closest to the temperature measurement. Both pressure and temperature measurements must be taken either upstream or downstream of the check valve.

SP-30 *(Superheat Adjustment)*

1. To increase superheat (decreases flow and reduces suction pressure), turn adjustment screw clockwise two full turns. Allow time for the system to react.

NOTE: As measured superheat decreases with a partial load, these adjustments should be made at 60% load or above. (With a dual pilot thermo valve arrangement, the load must be manipulated for each setting.)

2. Observe for increased superheat; adjust accordingly until design superheat is obtained.

- **Maintenance** - The only maintenance required for the pilot thermo valve is inspection, cleaning or replacing the cage assembly, and/or replacing the power assembly.

SP-31 *(Thermo-Expansion Valve Dissasembly)*

NOTE: The liquid line must be at atmospheric pressure before disassembly.

. Remove the two cap screws, lift off the power assembly and remove the cage assembly.

2. Compress the cage spring to inspect pin and seat. If either are worn or eroded, replace cage assembly.

3. Check power assembly by pressing finger against buffer plate; replace assembly if plate is easy to move or depress.

CAUTION: Be sure all three gaskets are replaced in their proper places on the cage; that the two lugs on the cage assembly feed into their grooves in the power assembly; and that valve parts are not forced together.

FIG. 40 TYPICAL PILOT THERMO VALVE

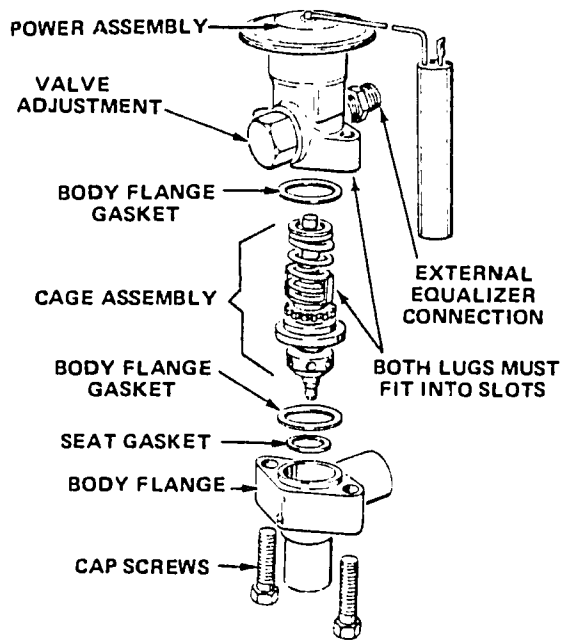

4g. Pilot Operated Solenoid Thermal Expansion Valve(s) (Main)

No adjustment of the pilot operated solenoid TX valve is necessary. This valve may be manually unseated by turning the manual opening stem beneath the seal cap on the top of the valve in a clockwise direction, until a stop position is reached.

NOTE: Always return the manual stem to the original position before starting the unit.

- **Maintenance**

NOTE: The most expedient method for inspection, cleaning or replacing parts would be to repair them in place.

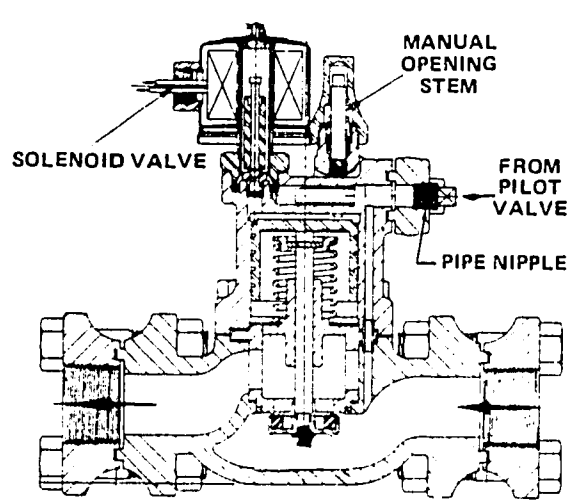

FIG. 41 TYPICAL P.O.S. THERMAL EXPANSION VALVE

SP-32 *(Disassembly/Maintenance P.O.S. Valve)*

1. *Remove the solenoid coil.*
2. *Remove four cap screws, lift off upper body. Remove piston, inspect piston, rings, cylinder wall; check for free movement of piston in cylinder; wipe clean, oil all surfaces. Clean bleed port in top of piston.*
3. *Remove cage assembly, compress cage spring and examine valve disc, restrictor plug and seat; replace cage assembly if valve disc or seat are cut or eroded.*
4. *Re-assemble, insert cage with gaskets. Carefully place piston with rings in upper body. Re-assemble unit and tighten cap screws evenly. Replace pilot line connection, test for leaks and re-install.*
5. *Take apart the solenoid valve assembly. Check seat for wear, dirt, rust, etc. Replace if required.*

TYPICAL THROTTLING ARRANGEMENT (1) PILOT, (1) MAIN EXPANSION VALVE

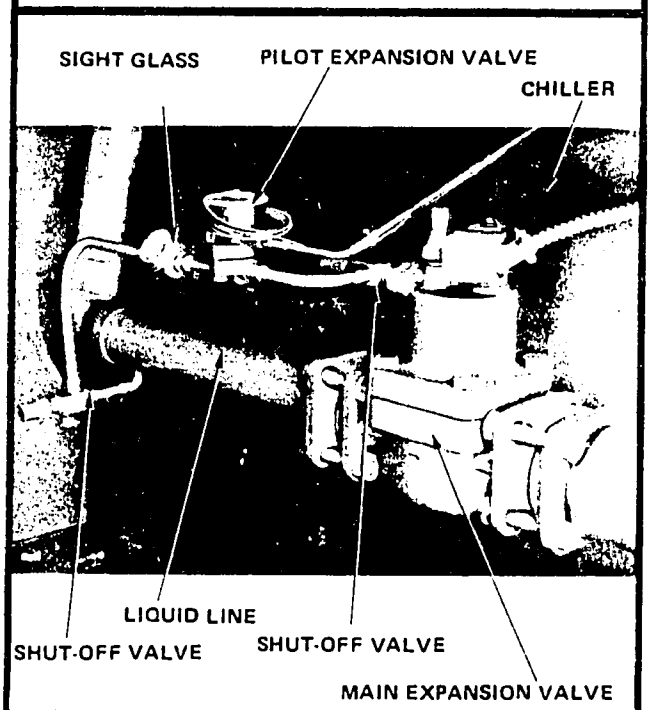

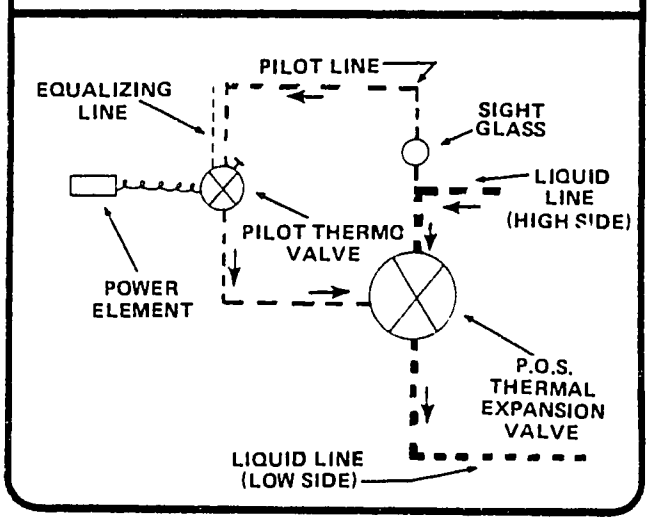

FIG. 42 TYPICAL THROTTLING ARRANGEMENTS

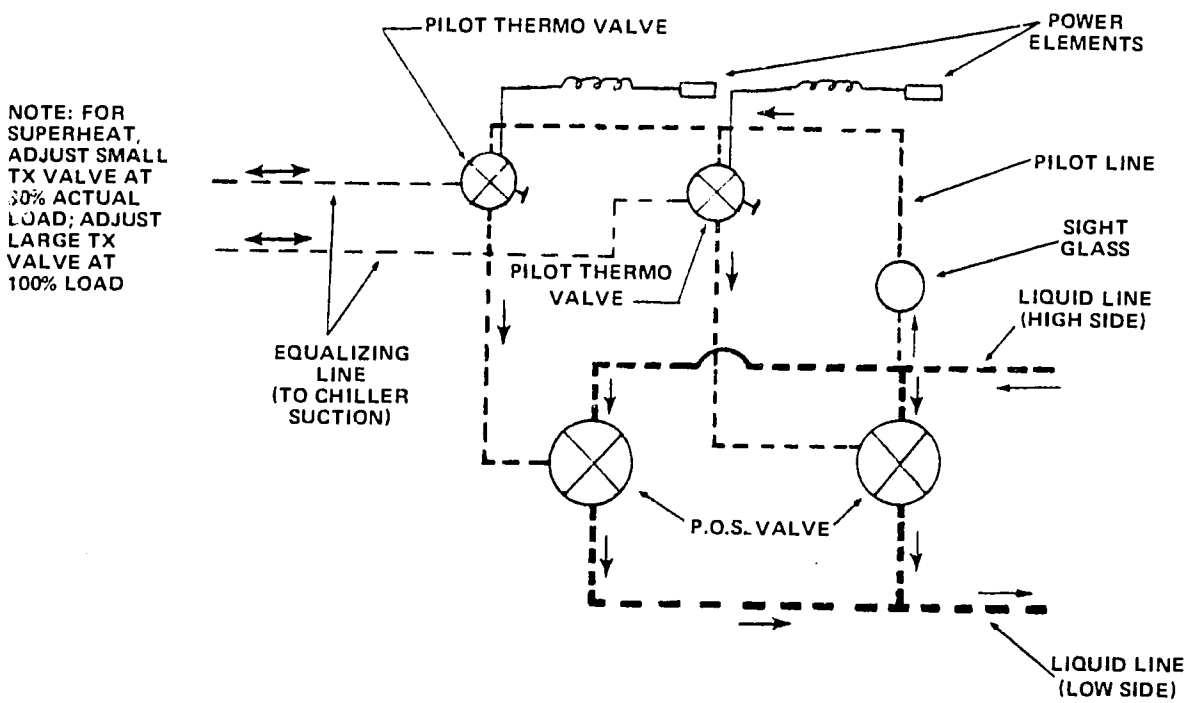

SCHEMATIC - (2) PILOT THERMO VALVES AND
(2) PILOT OPERATED SOLENOID THERMAL EXPANSION VALVES.

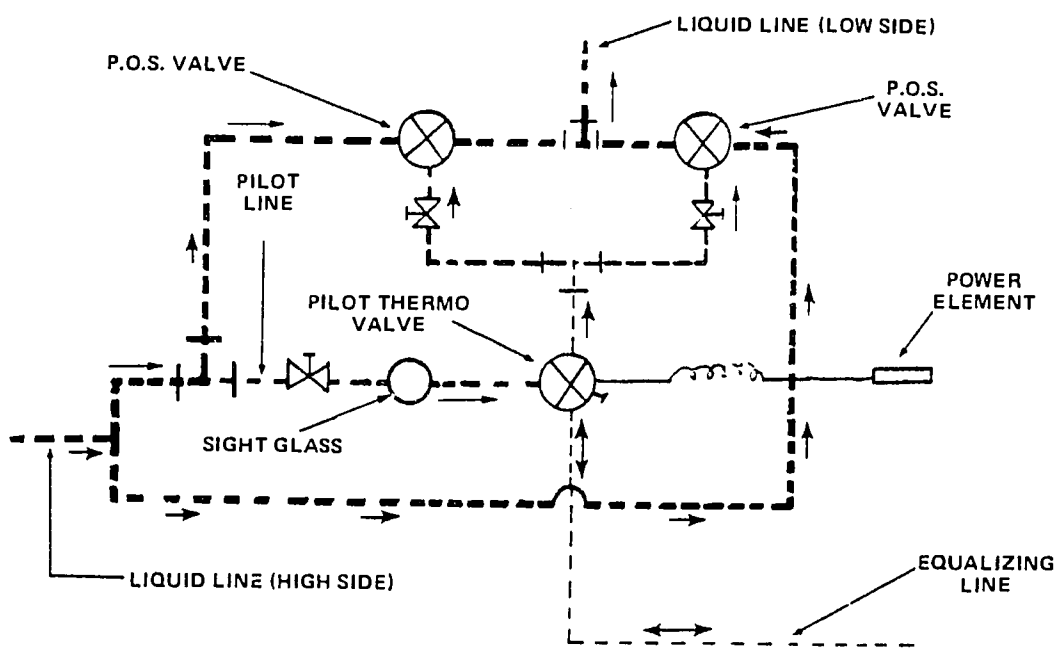

SCHEMATIC - (1) PILOT THERMO VALVE AND
(2) PILOT OPERATED SOLENOID THERMAL EXPANSION VALVES

FIG. 43 - TYPICAL SUCTION FILTER - IN LINE TYPE

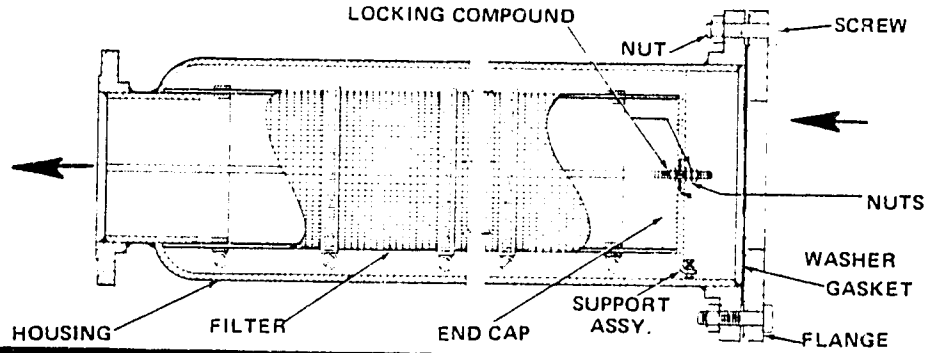

FIG. 44 - TYPICAL SUCTION FILTER - CHILLER HEAD TYPE

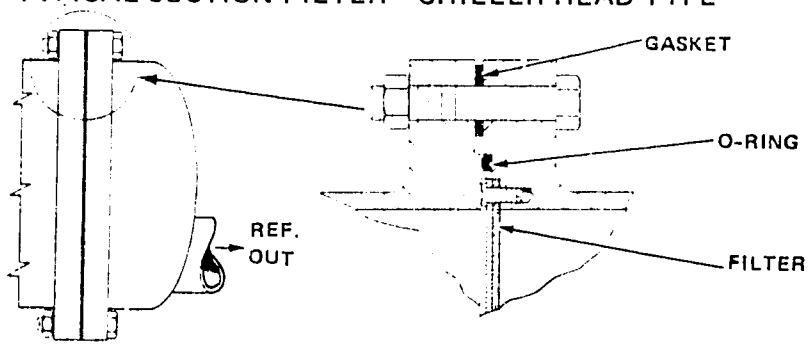

4h. Suction Filter

The suction filter should normally be inspected, cleaned or the element replaced only when a major overhaul is performed. Direct expansion type chiller units have the filter assembly located in the suction side of the chiller head. Flooded type chiller units have the filter located in the suction line near the compressor.

SP-33 *(Suction Filter Maintenance-In-Line Type)*

1. Transfer refrigerant to the condenser or remove the charge completely. (Refer to SP-7 thru SP-12) Isolate suction line and insure this portion of the system is at atmospheric pressure.

2. Remove insulation over suction filter.

3. Remove flange bolts, lift and remove housing weldment from piping. Remove old gaskets.

4. Remove support assembly and filter element and replace element.

NOTE: A locking compound has been applied on the nuts, when re-installing, be sure the compound is suitable for the refrigerant used and compatible with the refrigerant oil.

5. Position filter over support pipe. Install nut on center rod and push against end of filter.

NOTE: Adjusting screw on support assembly may be loosened for clearance.

6. Install second nut on center rod. Push support assembly hard against filter to crush overhanging media. Tighten outer nut against support assembly to secure it in place against filter core. Apply locking compound, then turn inner nut outward until it contacts inside surface of support assembly. Inner nut should now be in correct position.

7. Remove outer nut and support assembly. Install end cap, and position over filter. Install washers, support assembly and apply locking compound. Install outer two nuts. Tighten nut to clamp parts in place.

8. Adjust screw on support assembly to prevent end movement of filter. Apply locking compound to jam nut (on housing weldment) then tighten.

9. Re-install into piping using new gaskets, and torque bolts evenly. Epoxy insulation over housing weldment. Add refrigerant as required and test for any refrigerant leakage. (Refer to SP-15)

SP-34 *(Suction Filter Maintenance-Head Type)*

1. Transfer refrigerant to the condenser or remove the charge completely. Isolate the chiller and insure chiller is at atmospheric pressure (Refer to SP-7 thru SP-12).

2. Remove insulation at chiller suction head and suction flange. Remove flange bolts at chiller head and suction piping flange.

3. Remove chiller head and pipe assembly, head flange O-Ring and suction pipe flange gasket.

4. Disassemble filter element and inspect. Clean filter element with R-11 or replace if necessary.

5. Reassemble filter element to head with felt facing chiller.

6. Install chiller head assembly using new flange gaskets and head O-Ring.

7. Add refrigerant as required and test for any refrigerant leakage.

G. OPTIONAL SUBSYSTEM MAINTENANCE

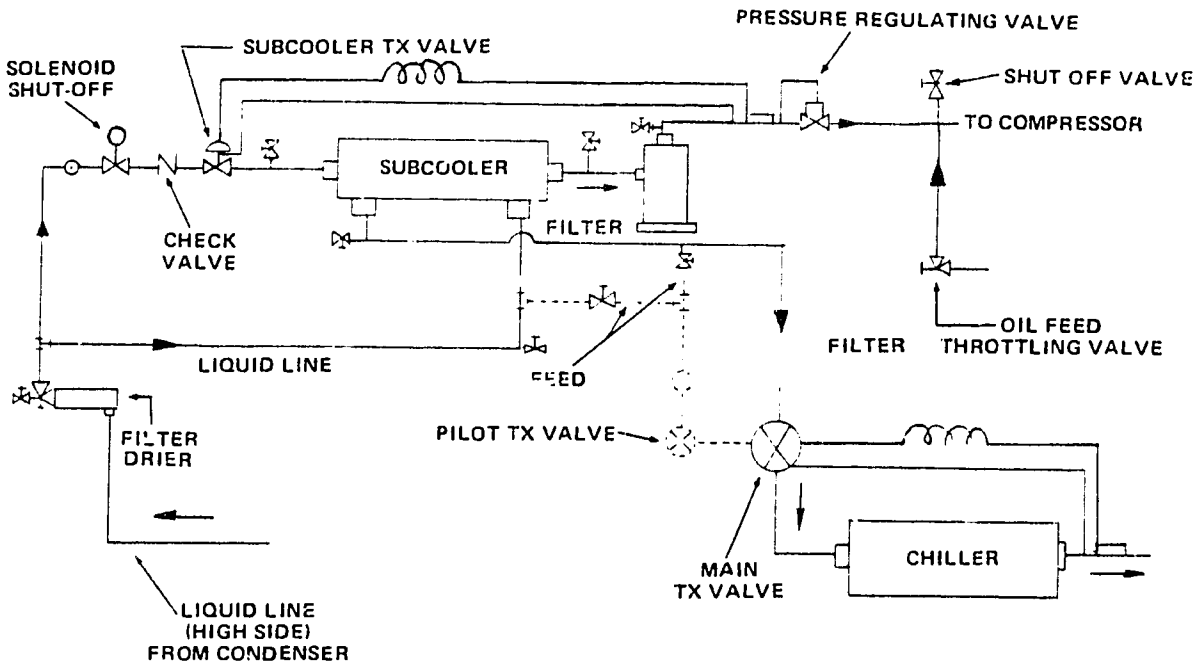

FIG. 45 TYPICAL VAPOR INJECTION SUBSYSTEM SCHEMATIC

1. VAPOR INJECTION

NOTE: It is necessary to have a load available that is sufficient to run the machine at full load at design conditions for the proper adjustment of the vapor injection system.

- **Adjustments**

- **Subcooler TX Valve** - Adjust superheat to 8°F to 12°F (4.4°C to 6.7°C) as measured at the subcooler outlet.

- **Evaporator Pressure Regulator** - Adjustment must be set at 10% below design conditions.

- **Feed Lines to Pilot TX Valve** - Use the warm liquid normally unless job conditions are such that unit operation is improved using cold liquid.

- **Oil Feed Valve** - Close valve until noise level increases; then back off 90° rotation.

- **Vapor Injection Shut-Off** - Normally set 65% slide valve travel to open solenoid. It can be adjusted from 40% to 75% to suit job conditions.

2. HOT GAS BYPASS (UNLOADED START)

The only periodic maintenance required on the unloaded start gas bypass is to insure the solenoid valve is operational and the timer maintains a 10 second timing period. The voltage supplied to the solenoid must not exceed ± 10% of the rated nameplate voltage. If the valve sticks or chatters, it should be disassembled and cleaned or replaced if required.

3. HOT GAS BYPASS (CAPACITY CONTROL)

The capacity control hot gas bypass requires a throttling valve adjustment upon installation and may require periodic readjustment. The throttling valve (located on the hot gas bypass line) should be adjusted at design percent slide valve activation as noted on the unit wiring diagram. The voltage supplied to the solenoid must not exceed ± 10% of the rated nameplate voltage. If the valve sticks or chatters, it whould be disassembled and cleaned or replaced if required.

SP-35 *(Hot Gas Bypass Adjustment)*

1. Position slide valve at design percent slide valve activation by manipulating the load to the chiller.

NOTE: Do not position slide valve by means of the temperature load controller. This will not reflect an accurate valve adjustment.

2. Monitor the temperature of the leaving chilled water or brine. if the temperature approaches the corresponding low pressure cut-out, open the throttling valve to avoid shut-down of the unit.

3. Rotating valve in the clockwise direction will lower leaving brine temperature, and may cycle off the unit. Rotating valve in the counter clockwise direction may load the compressor or may cycle the hot gas bypass solenoid on and off. Neither of these extremes are desirable. Adjust valve between these actions.

H. TYPICAL SYSTEM TESTS

MOTOR WINDING
1. INSULATION RESISTANCE TEST

This test is a measure of the dielectric resistance of the insulation to determine the condition of the motor. A D.C. voltage, greater than the operating voltage, is applied to the motor lead using a megohmmeter (megger). The resistance between ground and the motor lead is measured on the megger to determine the quality of insulation between the motor winding and ground. The megger is also used to determine the quality of insulation between the individual windings.

NOTE: Motor housing heaters must be activated a minimum of 24 hours to insure that the stator windings are at least 20°F (11°C) higher than the saturation temperature of the refrigerant vapor. The stator temperature is determined as specified in *SP-36*. A normal refrigerant charge in the unit is required.

CAUTION: As high voltages are used, extreme caution must be emphasized while conducting this test. All personnel in the area must be warned of the test being performed. All external power must be disconnected from the unit and safety gloves must be worn.

SP-36 *(Motor Insulation Resistance Test)*

1. Be sure that the main power source is disconnected from the unit.

2. Disconnect the motor terminal leads and the motor protector leads from their respective terminals on the compressor motor or oil pump motor.

3. Discharge any residual charges which may exist by grounding out each motor terminal.

4. Check the refrigerant pressure in the housing and with the proper refrigerant pressure temperature chart, convert the pressure to saturated temperature.

5. With an ohmmeter determine the resistance of each temperature sensor. With the table below convert this resistance to temperature. If this temperature does not exceed the saturated refrigerant temperature by at least 20°F (11°C) the housing heaters should be turned on for another 24 hours.

6. Phase to ground test - Connect the megger to terminal 1 and ground. Take a reading and record. Continue until readings of all terminals are taken and recorded.

7. Phase to phase test - Connect megger as shown in Figure 46 to isolate terminal 1. Take reading and record. Continue until all phases, as shown in Figure 46, have been isolated and their readings taken and recorded.

8. With the table below determine the minimum meg ohm values for the corresponding housing temperature. If the readings are below the minimum values, turn the housing heaters on for an additional 24 hours then repeat steps 5 through 7. If readings remain below minimum, contact National Service, Dunham-Bush, West Hartford, CT.

If readings are above the minimum, the power lead terminals may be connected and tightened in accordance with the label found in the cover of the terminal box.

9. Start the motor. After 8 or 10 hours of operation repeat this service procedure. If readings fall below the minimum values DO NOT START MOTOR *- Contact National Service, Dunham-Bush, West Hartford, CT.*

FIG. 46 PHASE TO PHASE TEST

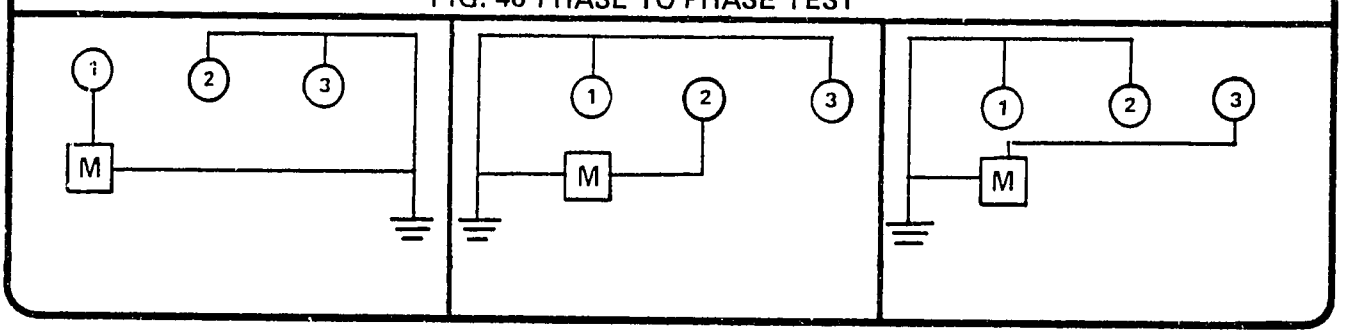

MINIMUM MEGGER VALUES

TEMP SENSOR TERMINAL	CORRESPONDING TEMPERATURE		MINIMUM MEGGER READING	TEMP. SENSOR TERMINAL	CORRESPONDING TEMPERATURE		MINIMUM MEGGER READING	TEMP. SENSOR TERMINAL	CORRESPONDING TEMPERATURE		MINIMUM MEGGER READING	TEMP. SENSOR TERMINAL	CORRESPONDING TEMPERATURE		MINIMUM MEGGER READING	TEMP. SENSOR TERMINAL	CORRESPONDING TEMPERATURE		MINIMUM MEGGER READING
(OHMS)	(°F)	(°C)	(MEG OHMS)	(OHMS)	(°F)	(°C)	(MEG OHMS)	(OHMS)	(°F)	(°C)	(MEG OHMS)	(OHMS)	(°F)	(°C)	(MEG OHMS)	(OHMS)	(°F)	(°C)	(MEG OHMS)
68	40.0	4.4	215	78	90.1	32.3	60	88	139.5	59.7	5	98	187.4	86.3	5	108	233.3	111.8	5
69	45.0	7.2	185	79	95.1	35.1	50	89	144.4	62.4	5	99	192.1	88.9	5	109	237.8	114.3	5
70	50.0	10.0	165	80	100.1	37.8	40	90	149.2	65.1	5	100	196.3	91.3	5	110	240.7	115.9	5
71	55.0	12.8	135	81	105.1	40.6	35	91	154.1	67.8	5	101	201.4	94.1	5	111	242.3	116.8	5
72	60.0	15.6	125	82	110.0	43.3	30	92	158.9	70.5	5	102	206.0	96.7	5	112	251.1	121.7	5
73	65.0	18.3	115	83	115.0	46.1	25	93	163.7	73.2	5	103	210.6	99.2	5	113	255.5	124.2	5
74	70.0	21.1	90	84	119.9	48.8	20	94	168.5	75.8	5	104	215.2	102.0	5	114	259.8	126.6	5
75	75.0	23.9	85	85	124.8	51.6	15	95	173.2	78.4	5	105	219.8	104.3	5	115	264.1	128.9	5
76	80.0	26.7	75	86	129.8	54.3	10	96	178.0	81.1	5	106	224.3	106.8	5	116	268.9	131.3	5
77	85.0	29.4	65	87	134.7	57.1	10	97	182.7	83.7	5	107	228.8	109.3	5	117	272.7	133.7	5

H. TYPICAL SYSTEM TESTS CONTINUED

2. REFRIGERANT LEAK TEST

Pressure leak testing may be performed on either a component of the refrigerant system, or on the entire system.

> CAUTION: All gages must be valved off to avoid damage under high test pressure.

SP-37 *(Refrigerant Leak Test)*

1. *Complete System (Remove refrigerant charge and have sample tested for quality.*
   a. *Open all line valves and manually unseat the expansion valves.*
   b. *Add 25 psig of refrigerant R22. Back this up with dry nitrogen bringing the pressure up in steps to 90% of the relief valve setting for the chiller.*
   c. *Isolate the vessel (King Valve)*
   d. *Bring up the pressure in the remainder of the unit to 90% of relief valve setting for the condenser.*
   e. *Check all vessels, valves and joints with an electronic leak detector, or halide torch. If leaks are found, isolate them and make repairs.*
2. *Partial System*
   When the charge is pumped into the condenser a low side pressure leak check can be made using refrigerant R-22.

> CAUTION: If nitrogen is used the low side test pressure must be kept 20 psig below the condenser pressure to prevent nitrogen from contaminating the charge.

   a. *Open all refrigerant valves on the low side and unseat the expansion valves.*
   b. *Check all vessels, valves and joints with an electronic leak detector or halide torch. If leaks are found, isolate them and make repairs.*

3. CHECKING PHASING OF MOTORS FOR PROPER DIRECTION OF ROTATION

a. Start-up unit in normal manner.

b. When the compressor starts to accellerate, immediately check the suction pressure gage. If the pressure is dropping, the compressor is wired correctly and turning in the proper direction. If the suction pressure is rising, the motor is wired incorrectly and the control circuit breaker should be turned off immediately. Operation of the compressor in the wrong direction at full speed can damage the compressor and system.

4. TYPICAL CONTROL OPERATION TESTS

> WARNING: The factory is not responsible for damage to any component of the unit as a result of mis-calibration and or testing of safety and operational controls.

NOTE: No deviations in system wiring from that shown on schematics furnished shall be made without prior written approval of Dunham-Bush, Inc.

> CAUTION: The following procedures require that all control settings, valves and other devices and adjustments on the unit be at normal settings, or conditions, at the start of each procedure except as specifically stated. At the completion of each procedure, restore all normal conditions to the unit before starting the next procedure.
>
> Compressor starts limited to 3 starts per hour.

The purpose of tripping the safety controls is to insure proper operation and calibration to prevent a system failure. The tests may also be used to troubleshoot a suspected control defect. **Consult the wiring diagram for design settings. The following procedures are of a typical unit. Consult the wiring diagram to verify sequence of events.**

Equipment: Test lamp, ohm or multi-meter, thermometer, thermocouple tester, stop watch, resistance decade box, test gages.

4a. Safety Controls (Test)

(IPS) High /Low Suction Pressure Switch (Low Pressure Function)

With the unit operating normally unload the compressor to a minimum load by means of the manual knob on the temperature load controller. Gradually close the drier service valve (high side) and insure the safety switch light illuminates while the unit shuts down at the design low pressure cut-out.

(IPS) High Low Suction Pressure Switch (High Pressure Function)

With the unit operating normally, position the slide valve in the 10% to 30% range by means of the manual knob on the temperature load controller. Slowly throttle a shut-off valve in the condenser field piping. Observe that the safety switch light illuminates while the unit shuts down at the specified high pressure cut-out.

> CAUTION: Do not exceed the design high pressure cutout setting or 90% of the pressure setting of the high side relief valve.

Manually reset the high discharge pressure switch.

(7TAS) Low Refrigerant Temperature (Flooded Chiller)

With the control power off, place a continuity tester in parallel with the control. Remove the bulb of 7TAS from its well and immerse in an ice batn. Monitor the temperature of the ice bath. Adjust the setting of the control and observe if the control switches position at the temperature of the ice bath. If the control is not faulty readjust to its proper setting.

(1TAS) Compressor Motor Thermal Protector (Hermetic Models Only)

Disconnect compressor start control circuit to prevent compressor from starting. Disconnect line voltage at oil pump motor starter (or circuit breaker) to prevent oil pump operation during test. Disconnect and insulate wire from one motor sensor. Connect a resistance decade box set at 75 ohms to bypass the sensor. Reset the safety device located on this circuit. Activate control circuit voltage. Raise the resistance in 1 ohm increments to 110 ohms. At this point, raise the resistance in 0.1 ohms increments. Continue until the safety switch light illuminates. The resistance at this point should be 115.4 ± .80 ohms.

(12TAS) High Oil Temperature Control (Direct Drive)

With control power off, remove the power element bulb from the well and immerse in water bath. Raise

H. TYPICAL SYSTEM TESTS CONTINUED

and lower temperature of water bath to determine cut-in, cut-out, setting. Adjust accordingly to design temperature.

(13TAS) Seal Oil Temperature Safety (Direct Drive)

With control power off, disconnect the control. Connect a continuity tester to the terminals of the control and immerse the bulb into a water bath of 130°F (54.5°C). The control should trip at 130°F ± 5°F (54.5°C ± 2.8°C). Make adjustments as necessary.

(2TAS) Freezestat

Monitor the temperature of the leaving water or brine With control power off disconnect the freezestat from the control circuit. Connect a continuity tester to the terminals of the control. Raise the setting of this control to the temperature of the leaving water or brine. If the temperature is the same the control is in calibration and can be reset and reconnected into the circuit. If the temperature setting does not agree the control is faulty.

(FLS) Flow Switch

With the unit off, disconnect the electrical power to the chilled water pump. Attempt to start the unit. The safety light should illuminate while the unit does not start. Connect electrical power to pump and start chiller pump. Throttle water flow to chiller while monitoring pressure drop. Continue throttling until flow switch trips. Record ΔP across chiller. Flow switch should trip at approximately 25% of design pressure drop which will be approximately 50% of the design flow.

(1TR) Anti-Short Cycle Timer

Start the unit and observe that the anti-short cycle timer period light illuminates simultaneously with the start-up delay light. Observe that the anti-short cycle timer period light extinguishes 20 minutes after the start-up delay light is extinguished. The unit must operate continuously during this period to observe this action. This procedure will de-energize the anti-short cycle timer coil without stopping the unit, or attempting to restart, during the 20 minute time lapse.

4b. Automatic and Operating Controls (Test)

(3TR) Oil Pump Shut Down Time Delay Relay

With the unit off, pull the circuit breaker supplying electrical service to the oil pump motor. Attempt to start unit in normal manner. The oil pump starter will pull in. Observe that the oil pressure failure light is illuminated and that the oil pump starter drops out 60 seconds later.

(2TR) Oil Pressure Failure Time Delay

Connect a test lamp in parallel with the oil failure time delay coil. With the unit operating normally, gradually close the oil filter shut off valve(s) to slightly below pressure switch cut out pressure (high side of filter). Observe that the oil failure light illuminates and unit shutdown occurs 20 seconds later. If the unit has not shut down after 24 seconds, stop the machine manually and replace the timer.

(4TR) Start-Up Time Delay

Connect a test lamp to terminals on each side of the start-up time delay coil. Start the unit in the normal manner, and observe that the compressor starts after 60 seconds with continuous electrical power to the start-up time delay coil.

(2PS) Low Suction Pressure Unload Control

With the unit operating normally unload the compressor to minimum load by means of the manual knob on the temperature load controller. Gradually close the drier service valve (high side) and observe if the (fast) unload solenoid energizes when the suction pressure drops to design cut-in. Gradually open the filter drier service valve, and observe the (fast) unload solenoid de-energizes when the suction pressure rises to design cut-out. The differential on this control is fixed when used on std. heat reclaim units.

(3PS) Differential Oil Pressure

Connect a test lamp to terminals on each side of the oil failure time delay coil. With the unit operating normally, gradually close the oil filter shut-off valve(s) (high side of filter). Insure that the oil failure time delay coil energizes, when the oil refrigerant discharge differential pressure gauge drops to the design cut-in pressure. Gradually open the oil filter valve(s) and insure that oil failure time delay coil is de-energized when the oil refrigerant discharge differential pressure rises to the design cut-out pressure.

> **CAUTION:** This procedure must be performed with sufficient speed so that the oil failure time delay coil is actually energized for less than 20 seconds to prevent unit shut-down.

(12TR) Seal Oil T'stat By-Pass Timer (Direct Drive)

Start unit when the compressor initially starts, commence timing with a stop watch. After four minutes elapse, observe the contacts open on the seal oil t'stat by-pass timer relay.

(8TAS) Liquid Injection Thermostat (If Equipped)

With all power removed from the unit, disconnect the wire leading from the liquid injection thermostat to the liquid injection solenoid, connect a continuity tester across the liquid injection thermostat terminals. Remove the liquid injection thermostat bulb from its bulbwell and submerge in water in a suitable container. Raise and lower the water temperature and observe that the thermostat contacts close and open within design settings.

(TLC) Temperature Load Controller

> **CAUTION:** Heat reclaim TLC require this test when in heat reclaim load.

- **Current Limiting Function** - connect an Amp Probe at the terminals of the motor starter, with the unit operating normally at approximately full load, slowly throttle the water service valve in the field piping of the condenser. Observe the slide valve unload when the compressor motor current reaches 1.06 x the motor nameplate rated load amps.

H. TYPICAL SYSTEM TESTS CONTINUED

- **Temperature Control Function** - with the unit operating normally, observe that the chilled water (brine) outlet is at design temperature, when the index mark on the temperature knob is vertical. Rotate the knob clockwise and observe the slide valve unload. Rotate the knob counterclockwise, and observe the slide valve load. Reset at design temperature, rotate the temperature adjusting knob slightly back and forth to determine that there is ½° to 1°F (.28°C to .56°C) difference between loading and unloading action. This is the dead band. Replace the TLC if the dead band exceeds 3°F (1.7°C) ΔT.

4c. Additional Controls For Heat Reclaim Units

(13PS) Head Pressure Controller and Control Shunt (STD Heat Reclaim)

With the control panel off, valve off and disconnect the discharge pressure line at the (13PS) control. Remove control cover to obtain access to adjusting screws. Attach a container of nitrogen to a pressure regulating valve, a calibrated gauge, a manual vent, and a shut-off valve. Secure the connecting hose to the (13 PS) control inlet. Raise the pressure to the control to 13 PS step one design cut-in. Step-one switch should trip at design pressure. To raise the trip point, rotate the screw clockwise. Vent pressure slowly and observe switch trip back to its original position. Failure to trip at design cut-out requires adjustment of the differential wheel. The differential (cut in minus cut-out = diff.) is increased by clockwise rotation of the wheel. Only the step-one switch has an adjustable differential.

> CAUTION: Do not exceed the proof pressure rating on the nameplate or the design cut-in/cut-out pressures.

Repeat for 13 PS step two switch; raise pressure for design cut-out and reduce pressure for design cut-in, repeat for 13 PS step three switch; raise pressure for design cut-in, reduce pressure for design cut-out.

(7CR) Slide Valve Block To Prevent Unloading And Hot Gas By-Pass (Low Slide Valve Limit) STD-Heat Reclaim

NOTE: This control can only be checked while the unit is consistently operating in the heat reclaim mode throughout the test.

When the heat reclaim light (6 LT) illuminates manually unload the compressor by means of the temperature load controller (TLC) manual knob. Observe the slide valve indicator percent increments. The slide valve travel should stop at design low percent limitation while the hot gas by-pass solenoid is activated. For servicing the IDR assembly, consult compressor service manual 6136.

(10CR) Slide Valve Block To Prevent Loading (OPT)

NOTE: This control can only be checked when the unit is operating in the heat reclaim mode.

Immediately after the heat reclaim light illuminates, load the compressor by means of the temperature load controller (TLC) manual knob. Observe the slide valve indicator percent increments. The slide valve travel should stop at design high percent limitation.

> CAUTION: The leaving brine temperature should be monitored and a load must be available to unit to prevent shutdown.

STD. = Standard OPT = Optional

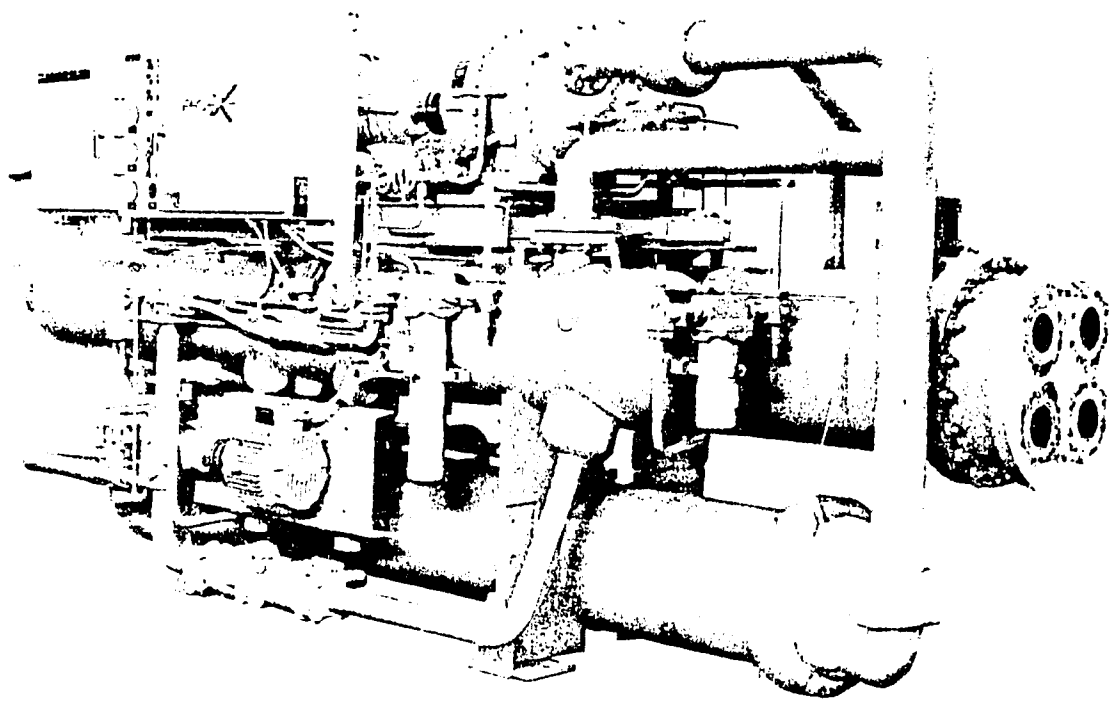

PCX-OHR - HEAT RECOVERY PACKAGED CHILLER

V. TROUBLE SHOOTING

A. GENERAL

Operating personnel must be completely familiar with the equipment and this manual. This will be necessary for correct diagnosis of any troubles and will permit immediate correction of minor difficulties. It is important that operators be able to quickly distinguish conditions requiring expert service in order to minimize down-time and maintenance expense. Comparison of the readings entered in the current Daily Log with those entered immediately following installation of the unit will be of considerable assistance in locating trouble areas.

To determine and isolate common problems which might occur, the following chart was made which lists symptoms, possible causes and remedies.

SYMPTOM	POSSIBLE CAUSE	REMEDY
A. Unit shuts down on compressor starter overload	1. Faulty compressor or motor 2. Overloads trip below 105% of full load amperage 3. Low voltage 4. Load limit relay out of adjustment	1. Contact Dunham-Bush Service Representative 2. Install properly sized overloads 3. Check line voltage. Must be ± 10% of rated voltage 4. Check and adjust for proper operation
B. Unit shuts down on oil pump starter overload	1. Cold oil 2. Low voltage 3. Bound Pump 4. Plugged oil filter 5. Faulty motor 6. Closed service valve	1. Check oil sump heaters for proper operation, repair and replace as necessary 2. Check line voltage must be ± 10% of rated voltage 3. Clean and repair as necessary 4. Clean and replace as necessary 5. Repair or replace as necessary 6. Open service valve
C. Unit shuts down on High-Low pressure switch	1. High Discharge Pressure a. Poor or no condensing water flow b. Condenser tubes fouled c. Refrigerant overcharge d. Air or noncondensables in refrigerant system e. Water supply to condenser is too warm f. Pressure switch out of calibration 2. Low Suction Pressure a. Plugged filter/drier b. Low refrigerant charge c. Low water flow thru chiller d. Fouled chiller e. Frozen chiller f. Pressure switch out of calibration g. Low condenser water temperature	1. a. Clean strainers, check setting of flow valve, check condenser pump - clean and repair as necessary b. Clean tubes, have water checked by water treatment specialist c. Remove excess refrigerant d. Purge air or non condensables e. Check, repair and adjust condenser water cooling facilities f. Reset or replace as necessary 2. a. Replace elements if pressure drop is above limits b. Check sight glass for flashing gas, check for leaks, repair leaks. Add refrigerant as necessary c. Check control valves for proper settings, check for dirty strainer, adjust clean and repair as necessary d. Clean chiller, consult water treatment specialist e. Check and reset or replace freeze-up switch as necessary, check brine for proper % solution f. Reset or replace as necessary g. Adjust condenser water regulating valve (if applicable). Check tower temperature controls
D. Shut down of unit on seal oil temp.	1. Low refrigerant charge 2. Inoperative TX valve 3. Inoperative seal oil cooler solenoid 4. Filter drier plugged	1. Check sight glass for flashing gas, check for leaks Repair leaks add refrigerant as necessary 2. Replace valve 3. Check coil for burnout 4. Clean or replace as necessary
E. Shut down on high oil temp.	Units with Liquid Injection: 1. Low refrigerant charge 2. Inoperative liquid injection TX valve 3. Inoperative liquid injection solenoid 4. Discharge temperature thermostats out of adjustment Units with Water Cooled Oil Cooler: 5. Oil cooler water valve out of adjustment 6. Inadequate water supply to oil cooler 7. Dirty oil cooler	1. Check sight glass for flashing gas, check for leaks, repair leaks and add refrigerant as necessary 2. Replace valve 3. Check coil for burnout 4. Reset to lower temperature 5. Readjust 6. Check condenser water pump and clean strainer 7. Check and clean tubes if necessary, check condenser water treatment installation
F. Unit shuts down on freezestat	1. Inadequate flow of chilled water 2. Malfunctioning freezestat 3. Incorrect TLC temperature setting	1. Check settings of valves, clean strainers, check chiller pump, clean and repair as necessary 2. Reset or replace as necessary 3. Readjust to desired leaving chilled water temperature
G. Unit shuts down on flow switch	1. Pump malfunctioning 2. Strainers plugged 3. Valves not set properly 4. Air in system 5. Flow switch inoperable	1. Check pump, clean and repair as necessary 2. Clean strainers 3. Reset valves 4. Bleed system 5. Replace

V. TROUBLE SHOOTING

A. GENERAL CONTINUED

SYMPTOM	POSSIBLE CAUSE	REMEDY
H. Unit shuts down on chilled water pump	1. Overload on pump	1. a. Pump malfunction, repair or replace as necessary b. Plugged strainer - clean c. Closed system valves, reset as necessary
J. Low discharge/oil temperature	1. Sump heaters not functioning during off period 2. Maladjusted expansion valves 3. Discharge temperature thermostat out of adjustment Water Cooled Oil Coolers 4. Oil cooler water valve out of adjustment 5. High water pressure	1. Repair and replace as necessary 2. Readjust superheat settings of main expansion valves, liquid injection and seal oil cooler expansion valves 3. Reset to lower temperature Water Cooled Oil Coolers 4. Readjust 5. Readjust water pressure regulator
K. High discharge/ oil temperature	1. Maladjusted expansion valve 2. Discharge temperature thermostat out of adjustment 3. Liquid injection solenoid valve malfunction Water Cooled Oil Coolers 4. Oil cooler water valve out of adjustment 5. Inadequate water supply to oil cooler 6. Dirty oil cooler	1. Readjust superheat settings of main expansion valves, liquid injection and seal oil cooler expansion valves 2. Reset to lower temperature 3. Check coil for burnout. Water Cooled Oil Coolers 4. Readjust 5. Check condenser water pump and clean strainer 6. Check and clean tubes
L. Unit periodically running low or losing oil	1. External oil leak 2. Low discharge superheat and or suction superheat 3. Units with jet pump not picking up oil - clogged lines or maladjusted valves 4. Discharge temperature thermostat out of adjustment 5. Liquid injection solenoid valve malfunction 6. Liquid injection TX valve malfunction	1. Check unit visually for leaks, repair as necessary 2. Readjust superheat as necessary 3. Repair or readjust as necessary 4 Reset to lower temperature 5. Repair or readjust as necessary 6. Repair or readjust as necessary
M. Shut down on low oil pressure	1. Oil filter plugged 2. Low oil pressure safety switch malfunction 3. Low discharge superheat and or suction superheat	1. Clean and replace as necessary 2. Repair or readjust as necessary 3. Readjust superheat as necessary

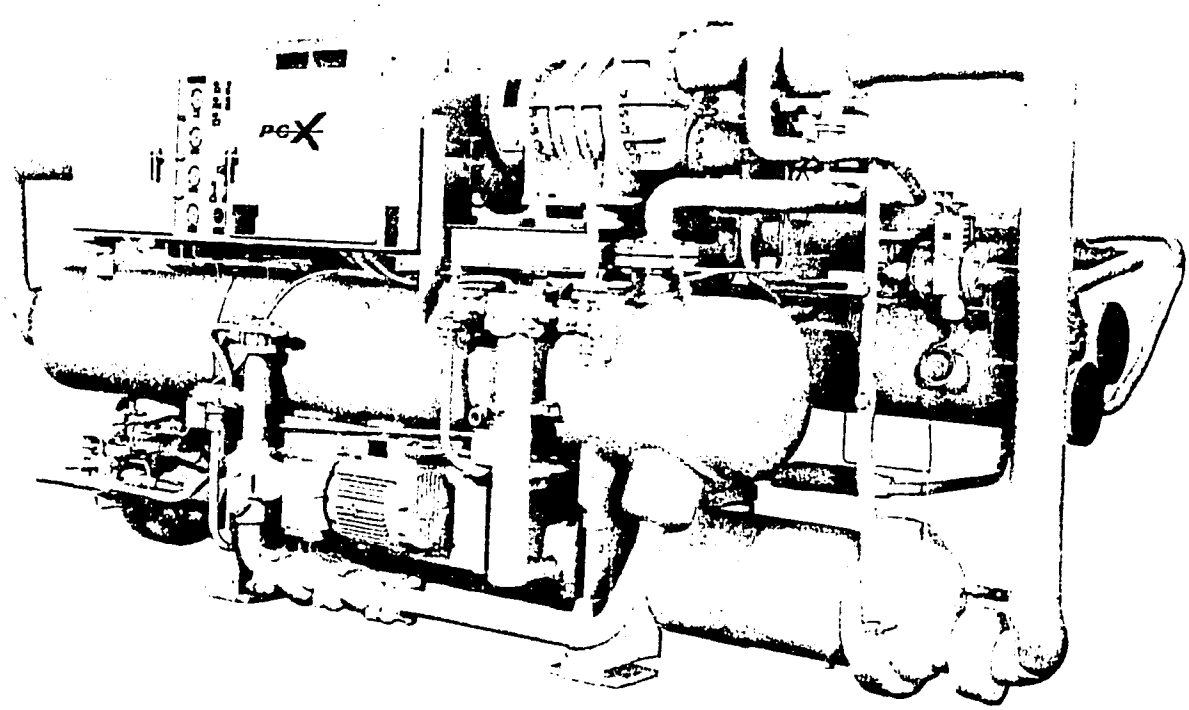

IPCX-O DIRECT DRIVE PACKAGED CHILLER

VI. APPENDIX

A. TYPICAL DAILY OPERATING LOG

FORM 9181A

DUNHAM-BUSH

DAILY OPERATING LOG
ROTARY SCREW COMPRESSOR PACKAGED CHILLER (PCX, IPCX)

UNIT MODEL _____ MONTH _____

UNIT SERIAL NUMBER _____ YEAR _____

		DATE		MONDAY	TUESDAY	WEDNESDAY	THURSDAY	FRIDAY	SATURDAY	SUNDAY
TIME		CHECK		☐AM ☐PM	☐AM ☐PM	☐AM ☐PM	☐AM ☐PM	☐AM ☐PM	☐AM ☐PM	☐AM ☐PM
ELAPSED TIME INDICATOR READING		HR								
SLIDE VALVE INDICATOR POSITION		%								
MOTOR CURRENT (COMPRESSOR)		AMPS								
MOTOR VOLTAGE (COMPRESSOR)		VOLTS								
REFRIGERANT SUCTION PRESSURE		PSIG	kPa							
REFRIGERANT SUCTION TEMPERATURE		°F	°C							
REFRIGERANT DISCHARGE PRESSURE		PSIG	kPa							
REFRIGERANT DISCHARGE TEMPERATURE		°F	°C							
NET OIL PRESSURE (GAGE MINUS DISCHARGE)		PSI	kPa							
SEAL DRAINAGE (DIRECT DRIVE ONLY)		CC/HR.								
SEAL OIL TEMPERATURE (DIRECT DRIVE ONLY)		°F	°C							
OIL TEMPERATURE ENTERING COMPRESSOR		°F	°C							
OIL SUMP SIGHT GLASS LEVEL		%								
WATER TEMPERATURES (CONDENSER)	ENTERING	°F	°C							
	LEAVING	°F	°C							
OUTSIDE AMBIENT AIR TEMPERATURE	WET BULB	°F	°C							
	DRY BULB	°F	°C							
REFRIGERANT INDICATORS		WET/DRY								
TRANSFER MEDIUM (BRINE, WATER) TEMPERATURES (CHILLER)	ENTERING	°F	°C							
	LEAVING	°F	°C							
CHILLED (AIR) MEDIUM (SYSTEM)	IN DRY BULB	°F	°C							
	IN WET BULB	°F	°C							
	OUT DRY BULB	°F	°C							
	OUT WET BULB	°F	°C							
RECORDED BY										

COMMENTS

_____

FORM NO. 9181-1

DUNHAM-BUSH

MONTHLY OPERATING LOG
ROTARY SCREW COMPRESSOR PACKAGED CHILLER (PCX, IPCX)

UNIT MODEL _____ DATE _____

UNIT SERIAL NO. _____ RECORDED BY _____

[ ] 1000 HOUR INTERVAL

LUBRICATION	OIL FILTER PRESSURE DROP		PSI	kPa	
	OIL PUMP MOTOR CURRENT		AMPS		
	OIL PUMP MOTOR VOLTAGE		VOLTS		
	OIL SUMP HEATER OPERATION		—		
	LOAD/UNLOAD SPEED (FULL STROKE)		MINUTES		
	OIL PUMP MOTOR STARTER AND RELAY CONTACTORS		—		
	SEAL OIL COOLER OPERATION (DIRECT DRIVE ONLY)		—		
	EVAPORATOR OIL RETURN VALVE (IF EQUIPPED)		—		
REFRIGERANT	COMPRESSOR MOTOR STARTER AND RELAY CONTACTORS		—		
	CONTROL AND GAGE CALIBRATION		—		
	REFRIGERANT LEAKAGE		—		
	FILTER DRIER PRESSURE DROP		PSI	kPa	
	LIQUID INJECTION OPERATION		—		
	DISCHARGE SUPERHEAT	DISCHARGE TEMP.	°F	°C	
		DISCHARGE PRESSURE	PSIG	kPa	
		SUPERHEAT	ΔF°	ΔC°	
	SUCTION SUPERHEAT	SUCTION TEMPERATURE	°F	°C	
		SUCTION PRESSURE	PSIG	kPa	
		SUPERHEAT	ΔF°	ΔC°	
HYDRONIC	CHILLER COOLING MEDIUM	FREEZE POINT	°F	°C	
		PH (BRINE ONLY)	—		
	CONDENSER PRESSURE DROP (WATER SIDE)		PSI	kPa	
	CHILLER PRESSURE DROP (BRINE SIDE)		PSI	kPa	

COMMENTS _____

[ ] 3000 HOUR INTERVAL

COMPRESSOR COUPLING ALIGNMENT (DIRECT DRIVE MODELS ONLY)		CM	INCH	
OIL PUMP COUPLING ALIGNMENT (DIRECT DRIVE OIL PUMP ONLY)		CM	INCH	
OIL ACIDITY (TOTAL ACID NUMBER)			TAN	
INSULATION RESISTANCE TEST	TEMP. SENSOR READINGS		OHM	
	MEG OHM READINGS		MEG OHM	

C. TYPICAL CONDENSER WATER PIPING

CONDENSER WATER PIPING

A relatively constant condensing temperature (compressor head pressure) should be maintained. The supply water temperature and flow rate must, therefore, be controlled to maintain this constant condensing temperature over the wide load and operating range of the packaged chiller. Valve manufacturers recommendations for piping should be followed.

If a cooling tower is supplying the condenser water, then some means to maintain a constant water supply temperature should be employed.

There are a number of different methods; e.g., cycling the tower fan off and on through a thermostat sensing the cooling tower sump water; temperature dampers controlling air flow (may also be used in conjunction with fan cycling) or by-passing all or part of the return water directly to the sump via a 3-way valve actuated by a controller sensing sump temperature.

The most stable compressor operation can be obtained with a water regulating valve modulating the water flow to the condenser, controlled by condensing pressure.

Heat reclaim units condense refrigerant at higher pressures while operating in the heat reclaim mode. However, this is justified by the amount of heating and cooling performed per kilowatt input. Controlling head pressures for heat reclaim units is highly specialized depending on the system application and is not included in this discussion.

The following are typical valving arrangements with suggested guidelines for the piping configurations. The cooling source is applicable to cooling towers, evaporative water coolers and natural sources.

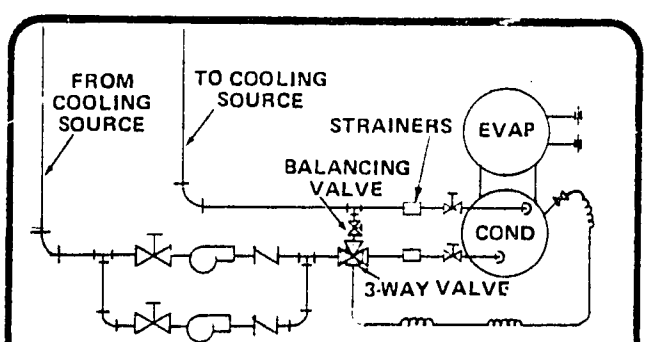

FIG. 47 TYPICAL DIVERSION OF ENTERING CONDENSER WATER

1. **Typical Diversion of Entering Condenser Water with Three-Way Valve.(Fig. 47)**

   Stable packaged chiller operation can be obtained by diverting a percentage of the entering water to bypass the condenser as a function of condensing pressure.

   With a diverting system, entering condenser water is regulated by a three-way valve sensing refrigerant condensing pressure. The water valve therefore maintains constant refrigerant head pressure in the condenser.

   - **Oil Cooler Piping** - Units that are equipped with a water cooled oil cooler have a two-way water regulating valve.(Fig. 48)

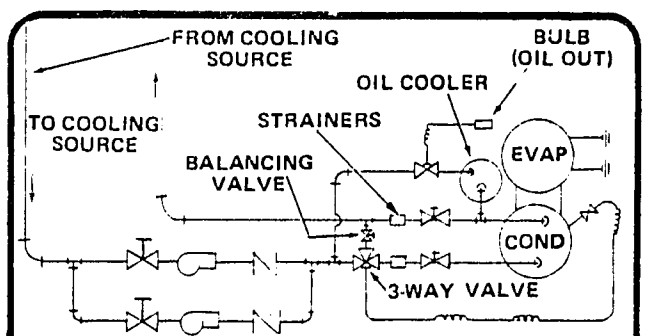

FIG. 48 TYPICAL DIVERSION OF ENTERING CONDENSER WATER WITH OIL COOLER

   With this configuration, the piping must be designed to have an uninterrupted water supply flow to the oil cooler. The supply to the oil cooler must be located upstream of the condenser water regulating valve.

2. **Cool Weather Package Operation**

   Any application of condenser water regulating valves with an anticipated entering water temperature of below 50°F (10°C) requires additional considerations. A minimum condensing pressure must be maintained to insure proper operation of the thermal expansion valves. If entering condenser water is not effectively regulated, proper operation of the packaged chiller may be jeopardized. Consult factory for parameters concerning your application.

3. **Cold Weather Operation (Cooling Towers)**

   If a system is to be operated in a cold climate [below 32°F (0°C)] some provision must be made to keep the cooling tower from freezing. Sump heaters or an indoor sump are two examples of how this can be accomplished. Consult the tower manufacturer for recommendations.

VI. APPENDIX

D. COMPRESSOR LUBRICATION REQUIREMENTS

The purpose of this chart is to define the type of oil used with large screw compressors (163, 204, 255mm) for various fluorocarbon applications.

TYPE OF OIL

TEMPERATURE		REFRIGERANT		
EVAPORATOR	CONDENSING	R-502 R-22	R-12	R-500
Above 20°F	Below 135°F	Oil 4	Oil 4	Oil 4
Above 20°F	Above 135°F	NA	Oil 14	Oil 14
Below 20°F	All	Oil 3	Oil 3	NA

This chart is used to define the oil pressure and oil failure switch settings for various applications.

REQUIRED OIL PRESSURE

TYPE SYSTEM	MINIMUM OIL FAILURE CUT-OUT SETTING (PSID)		FULL LOAD OIL PRESSURE (PSID)	
	BELOW 20° ET	ABOVE 20° ET	BELOW 20° ET	ABOVE 20° ET
PCX	20	20	40	40
IPCX	20	20	40	40
Heat Recovery	35	35	65	65

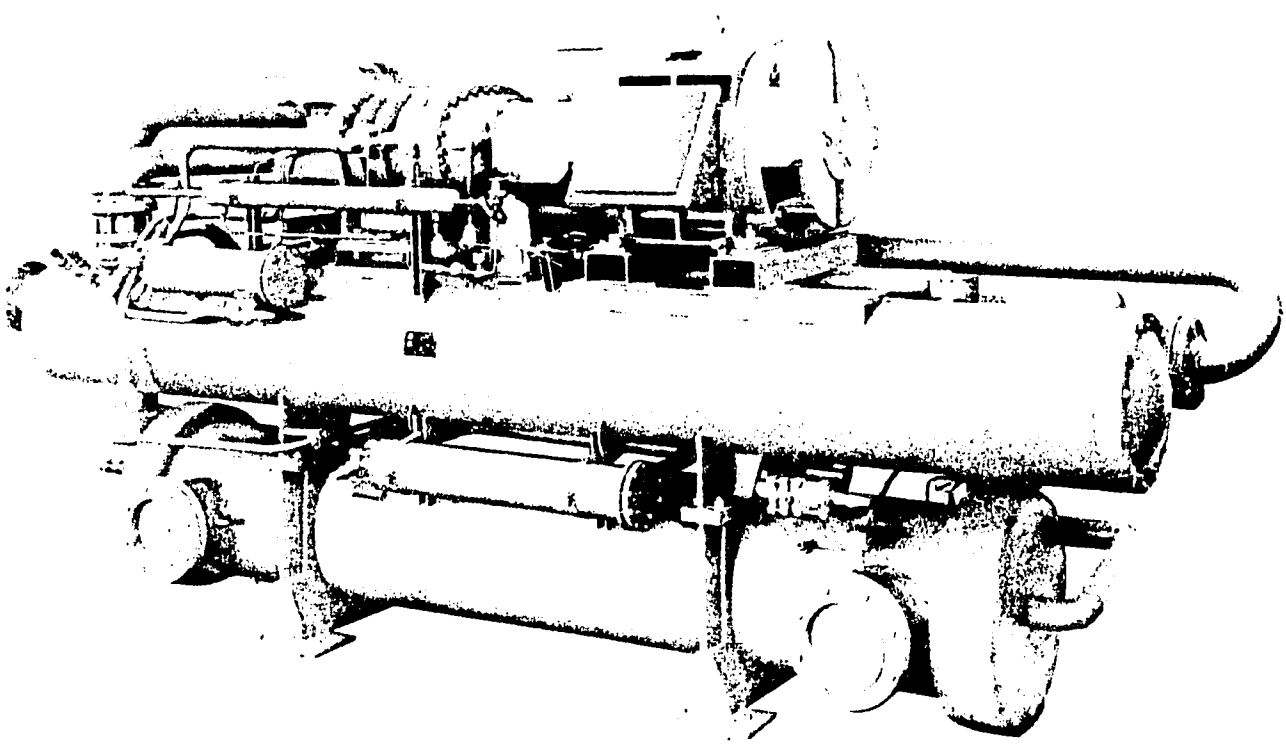

PCX-O DIRECT DRIVE PACKAGED CHILLER

E. TYPICAL INFORMATION TAGS AND LABELS

CAUTION

ALL ELECTRICAL CONNECTIONS MUST BE RETIGHTENED PRIOR TO STARTING THIS EQUIPMENT.
LOOSE CONNECTIONS CAN CAUSE DAMAGE TO THE WIRE, CONTROLS, MOTORS & ALSO CREATE A FIRE HAZARD.

TAG 56

USE
R22
ONLY

A-TAG 1-1

DISCHARGE
WARNING
OPEN THIS VALVE
BEFORE STARTING
DUNHAM-BUSH, INC.
COMPRESSOR DIVISION
WEST HARTFORD, CONN., U.S.A.

CHECK CONTROLS SETTINGS
BEFORE START-UP OF UNIT

CAUTION
'HAZARD OF ELECTRICAL SHOCK'
MORE THAN ONE DISCONNECT SWITCH MAY BE REQUIRED TO DE-ENERGIZE THE EQUIPMENT FOR SERVICING.

PLT2089

MOTOR TEMPERATURE SENSORS

USE ONLY THREE SENSORS-ONE IN EACH MOTOR PHASE

SENSORS 1 & 4 IN PHASE 1
SENSORS 2 & 5 IN PHASE 2
SENSORS 3 & 6 IN PHASE 3

COMBINATIONS OF SENSORS FROM BOTH SENSOR SETS CAN BE CONNECTED TO THE SAME MODULE; HOWEVER, TO DO SO THE COMMON TERMINALS OF BOTH SETS MUST BE CONNECTED TOGETHER.

AB-DGM 83

WARNING

DO NOT FORK LIFT FROM THIS END

A476029-001

CAUTION

PRIOR TO STARTING MOTOR:

STEP 1: MOTOR HOUSING HEATERS MUST BE ENERGIZED FOR 24 HOURS.
STEP 2: THE MOTOR TEMPERATURE RISE MUST BE AT LEAST 20°F ABOVE AMBIENT.
STEP 3: THE MOTOR MEGOHM READING MUST BE AT LEAST 50 MEGOHMS.

IT MAY BE NECESSARY TO LEAVE HEATERS ON LONGER THAN 24 HOURS TO ACHIEVE 20°F TEMP. RISE & 50 MEGOHMS IN SOME CASES.

STK36

TESTING OF MOTOR TEMPERATURE SENSORS

TO PREVENT PERMANENT DAMAGE TO THE MOTOR SENSORS, DO NOT CHECK THE SENSOR RESISTANCE WITH ANY INSTRUMENT POWERED BY A SOURCE GREATER THAN 6 VOLTS

AG 69-1

VI. APPENDIX

E. TYPICAL INFORMATION TAGS AND LABELS

OIL PUMP MOTOR POWER SUPPLY WIRING

THE POWER SUPPLY TO OPERATE THE OIL PUMP MOTOR IS FURNISHED AND WIRED BY THE CUSTOMER.

THE SUPPLY IS CONNECTED TO TERMINALS L1, L2, AND L3 OF THE OIL PUMP MOTOR CONTACTOR OR STARTER LOCATED IN THE CONTROL PANEL.

TAG 6B

CAUTION

PRIOR TO STARTING THIS UNIT PHASE SEQUENCE MUST BE CHECKED TO AGREE WITH THE CONNECTIONS OF THE OIL PUMP & COMPRESSOR MOTORS TO INSURE PROPER DIRECTIONAL ROTATION SEE INSTRUCTION MANUAL FOR VISUAL METHOD OF DETERMINING ROTATION WITH THE USE OF THE SYSTEM GAGES

TAG 61 1

RELIEF VALVE VENTING INFORMATION

CAUTION

1. FLEXIBLE CONNECTIONS MUST BE USED BETWEEN RELIEF VALVE AND EXTERNAL PIPING AND PIPING MUST BE SUPPORTED TO PREVENT STRAIN FROM BEING TRANSMITTED TO THE RELIEF VALVE ASSEMBLY.
2. WHEN TIGHTENING THE VENT CONNECTIONS TO THE RELIEF VALVE, HOLD THE UPPER HEX PORTION OF THE RELIEF VALVE WITH A WRENCH TO PREVENT IT FROM TURNING. THIS WILL PREVENT GASKET DAMAGE AND POSSIBLE LEAKES. DO NOT OVER TIGHTEN THE CONNECTIONS TO THE RELIEF VALVES.

P/N 050126A1

WARNING

THIS MOTOR LIMITED TO THREE STARTS PER HOUR.

RESTARTING MORE OFTEN WILL DAMAGE MOTOR.

DO NOT BYPASS OR ADVANCE ANTI RECYCLE TIMER.

WARNING

ATTENTION: SPECIAL FILTER ASSEMBLY INSTRUCTIONS — P/N: 050018A1

(1) THE ELEMENTS IN THIS SCHROEDER FILTER REQUIRE NEOPRENE GASKETS FOR FREON REFRIGERANTS
(2) STANDARD SCHROEDER ELEMENTS SUCH AS THOSE OBTAINED FROM LOCAL SOURCES, HAVE BUNA N GASKETS. THESE GASKETS CANNOT BE USED WITH FREON REFRIGERANTS AND MUST BE DISCARDED
(3) FILTER ELEMENTS WITH NEOPRENE GASKETS ARE D/B PART NO. FLR125 AND ARE MARKED G603
(4) MOLDED NEOPRENE GASKETS ARE D/B PART NO. GKT543 AND ARE IDENTIFIED WITH A BLUE MARK
(5) FLAT NEOPRENE GKT523 OR MOLDED NEOPRENE GASKETS GKT543 CAN BE REUSED IF NECESSARY. IT IS RECOMMENDED THAT SPARE FLR125 SETS BE ORDERED TO BE AVAILABLE WHEN REQUIRED

WARNING

MOST WATER SUPPLIES CONTAIN DISSOLVED OR SUSPENDED MATERIALS WHICH CAUSE SCALE FORMATION, CORROSION AND PROPOGATE SLIME, ALGAE, ETC. IN ORDER TO PREVENT EXCESSIVE MAINTENANCE COSTS DUE TO SCALE FORMATION AND POSSIBLE TUBE FAILURE

IT IS ESSENTIAL

THAT BOTH CONDENSER WATER AND CHILLER SYSTEM WATER BE ANALYZED BY A QUALIFIED WATER TREATMENT COMPANY.

AND THEIR RECOMMENDATION FOR PROPER CONDENSER AND CHILLED WATER TREATMENT BE FOLLOWED

ANY FAILURE DUE TO IMPROPER AND/OR LACK OF WATER TREATMENT

WILL VOID THE WARRANTY.

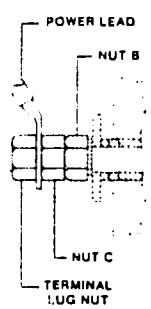

POWER LEAD TERMINAL TIGHTENING PROCEDURE

1. NUT C TO BE JAMMED AGAINST NUT B WHILE HOLDING NUT B.
2. INSTALL POWER LEAD TERMINAL ON STUD AND TORQUE TERMINAL LUG NUT TO VALUE IN TABLE BELOW WHILE HOLDING NUT C.
3. MAKE SURE THAT TERMINAL STUD DOES NOT TURN WHILE TORQUING TERMINAL LUG NUT.

TERMINAL TORQUING SPEC.

COMP MODEL	TERMINAL LUG NUTS
102	3 LB. FT.
127	15 LB. FT.
163, 204	20 LB. FT.
255	30 LB. FT.

DCM 68

KEEP VALVES CLOSED EXCEPT WHEN READING GAUGES

CAUTION — PLT 2224

IMPORTANT MOTOR APPLICATION INFORMATION

1. THE OVERLOADS PROTECTING THIS MOTOR MUST BE SET TO TRIP AT OR BELOW THE MAXIMUM CONTINUOUS CURRENT (AMPERE) RATING STAMPED HERE [ ]
2. THE STARTER AND OVERLOADS MUST CONFORM TO DUNHAM-BUSH SPECIFICATION ES-ELC-9.
3. NO CONTROLS, MANUAL OR AUTOMATIC, WHICH WILL START OR STOP THE MOTOR INDEPENDENTLY OF THE UNIT CONTROL CIRCUIT AND/OR BYPASS THE ANTI-RECYCLE TIMER ARE ALLOWED
4. MAXIMUM VOLTAGE UNBALANCE ALLOWED AT THE COMPRESSOR MOTOR TERMINALS IS 1%.
5. MAXIMUM VOLTAGE TOLERANCE IS ±10% OF STAMPED COMPRESSOR NAMEPLATE VOLTAGE MEASURED AT THE COMPRESSOR MOTOR TERMINALS.
6. FAILURE TO ADHERE TO THE ABOVE WILL VOID THE WARRANTY

DUNHAM-BUSH

AIR CONDITIONING, REFRIGERATION, HEATING PRODUCTS AND ACCESSORIES

MAIN OFFICES

175 SOUTH STREET WEST HARTFORD, CONNECTICUT 06110

FACTORIES

WEST HARTFORD DIVISION
179 South Street
West Hartford, Connecticut
06110

HARRISONBURG DIVISION
101 Burgess Road
Harrisonburg, Virginia
22801

MARSHALLTOWN DIVISION
811 East Main Street
Marshalltown, Iowa
50158

RIVERSIDE DIVISION
1850 Massachusetts Ave.
Riverside, California
92507

SUBSIDIARIES

DUNHAM-BUSH of Canada Limited
140 Wendell Avenue
Weston, Ontario

DUNHAM-BUSH, LTD.
Fitzherbert Road, Farlington
Portsmouth, Hampshire, England

DUNHAM-BUSH INTERNATIONAL: 175 South Street, West Hartford, Connecticut 06110, U.S.A.
CABLE: DUNBUSH or TELEX: 994469

SALES OFFICES

ALABAMA
Birmingham
Mobile

ARIZONA
Phoenix

ARKANSAS
Little Rock

CALIFORNIA
Arcadia
Los Angeles
San Diego
San Francisco

COLORADO
Denver

CONNECTICUT
Hartford
New Haven

FLORIDA
Jacksonville
Miami
Orlando
Tampa

GEORGIA
Atlanta

HAWAII
Honolulu

ILLINOIS
Chicago
Peoria
Rockford

INDIANA
Indianapolis
Michigan City

IOWA
Des Moines

KANSAS
Lenexa

KENTUCKY
Louisville

LOUISIANA
New Orleans
Shreveport

MAINE
Lewiston

MARYLAND
Baltimore
Silver Spring

MASSACHUSETTS
Boston
Springfield

MICHIGAN
Detroit
Grand Rapids
Kalamazoo

MINNESOTA
Minneapolis

MISSISSIPPI
Jackson

MISSOURI
Kansas City
St. Louis

MONTANA
Billings
Great Falls

NEBRASKA
Omaha

NEW JERSEY
Little Falls
South Amboy
Union

NEW MEXICO
Albuquerque

NEW YORK
Albany
Buffalo
New York City
Rochester
Syracuse

NORTH CAROLINA
Charlotte
Greensboro

OHIO
Akron
Cincinnati
Cleveland
Columbus
Dayton
Delaware
Toledo

OKLAHOMA
Oklahoma City
Tulsa

OREGON
Portland

PENNSYLVANIA
Harrisburg
Philadelphia
Pittsburgh
Pittston

RHODE ISLAND
Providence

SOUTH CAROLINA
Columbia
Greenville

TENNESSEE
Chattanooga
Memphis
Knoxville
Nashville

TEXAS
Austin
Corpus Christie
Dallas
El Paso
Fort Worth
Houston
Lubbock
San Antonio

UTAH
Salt Lake City

VIRGINIA
Alexandria
Richmond

WASHINGTON
Seattle
Spokane

WEST VIRGINIA
Barboursville

WISCONSIN
Milwaukee

DUNHAM-BUSH, INC. • West Hartford, Connecticut 06110, U.S.A.

6139B-10M-1174A-1278B

one of The Signal Companies

Exhibit F-5

FORM NO. 2505B

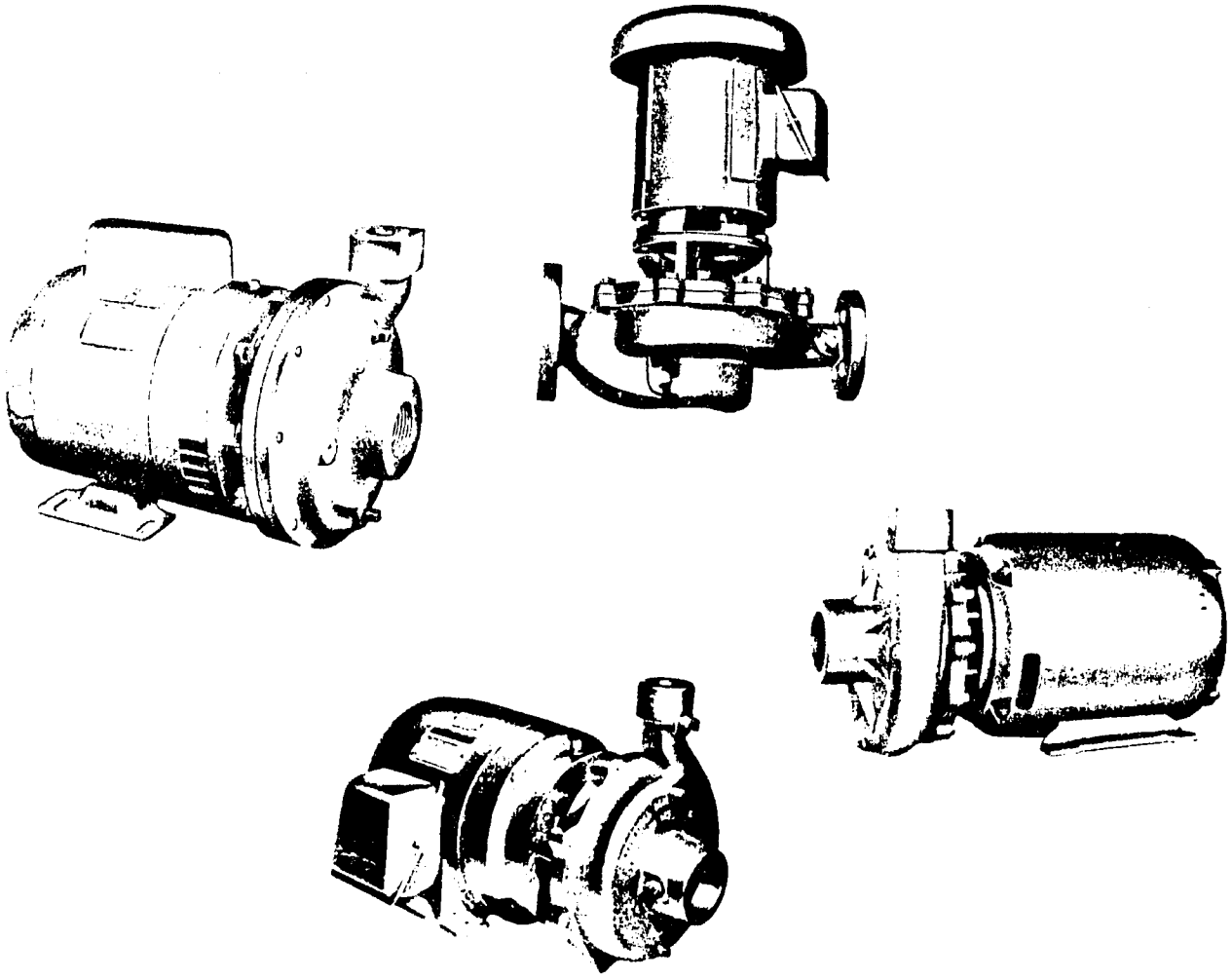

DUNHAM-BUSH

CENTRIFUGAL PUMPS

TYPE A5, A7, A9 AND PM7

PARTS SELECTION LIST

INDEX

Pg.

NOMENCLATURE 1
ORDERING PROCEDURE 1
A5 PUMPS
1/3 HP, 1/2 HP AND 3/4 HP 2
1 HP, 1-1/2 HP AND 2 HP 3
A9 PUMPS AND PARTS LIST
1/2 HP, 3/4 HP AND 1 HP 4
1 1/2 HP 5
2 HP 6–7
3 HP 8
5 HP 9
7 1/2 HP 10
10 HP AND 15 HP 11
SERIES A A9 PUMPS
1/2 HP, 3/4 HP AND 1 HP 12
1-1/2 HP 13
2 HP 14
3 HP 15
5 HP 16
7-1/2 HP 17
10 AND 15 HP 18
A7 PUMPS
3/4", 1-1/4" AND 1-1/2" DISCHARGE 19
2" AND 2-1/2" DISCHARGE 20
PM7 PUMPS
1", 1-1/4" AND 1-1/2" DISCHARGE 21
2" AND 2-1/2" DISCHARGE 22
A7A PUMPS
3/4", 1-1/4 " AND 1-1/2" DISCHARGE 23
PM7A PUMPS
1", 1-1/4" AND 1-1/2" DISCHARGE 24

DUNHAM-BUSH RESERVES THE RIGHT TO MAKE CHANGES IN SPECIFICATIONS AND DESIGN WITHOUT NOTICE.

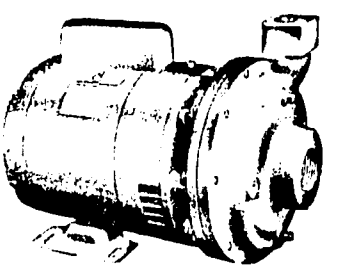

TYPE A5 PUMP

TYPE A7A AND A7 PUMPS

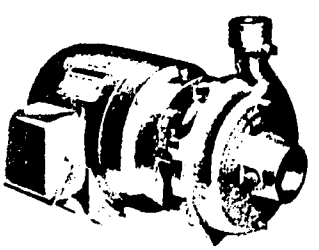

TYPE A9 PUMP

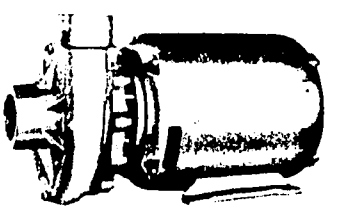

TYPE PM7 AND PM7A PUMPS

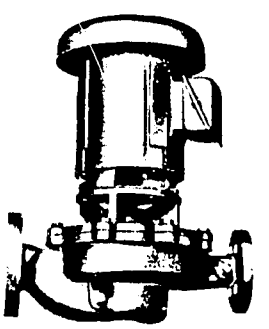

NOMENCLATURE

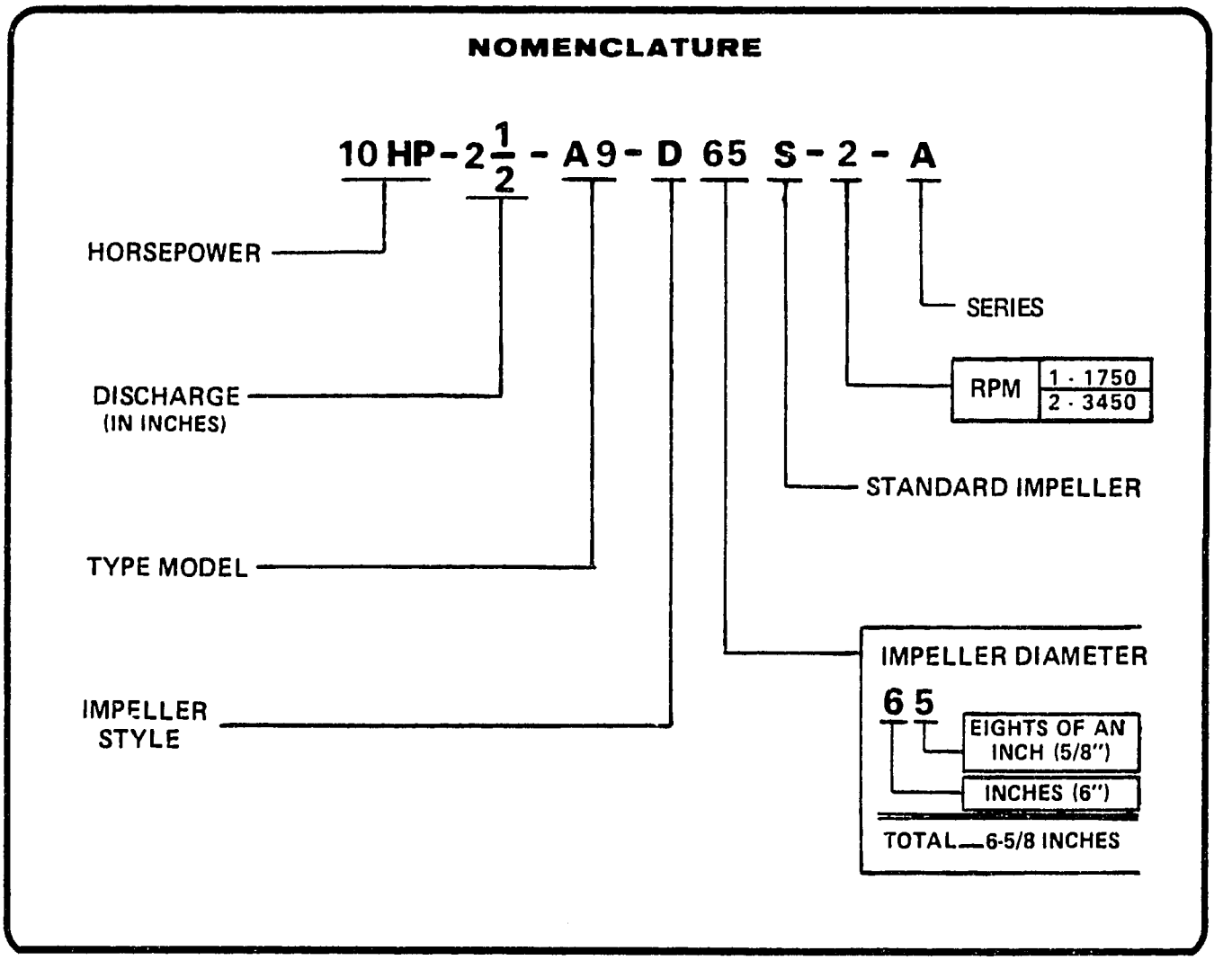

ORDERING PROCEDURE

1. Complete part number and description is required when ordering.
2. When a part number is not known or shown in the parts catalog, the complete model and serial number of the unit on which the part is to be used must be given.
3. Send all orders to:

   DUNHAM-BUSH, INC., PARTS DEPT.
   811 E. MAIN ST.
   MARSHALLTOWN, IOWA, 50158

4. Prices can be found in the latest revision of Form 17448 and are for one item or kit as applicable.
5. Minimum billing is $25.00.
6. All prices are subject to federal, state, local or other taxes which may be applicable.
7. All orders requiring **special handling** will have a surcharge of $25.00 or the actual cost of this requirement whichever is greater.
8. Dunham-Bush reserves the right to substitute parts if they are interchangeable with those ordered. The invoice will reflect the cost of the actual part shipped.
9. Refer to latest revision of Form 17448 for prices.
10. Refer to the latest revision of Form 1278 for terms of sale.

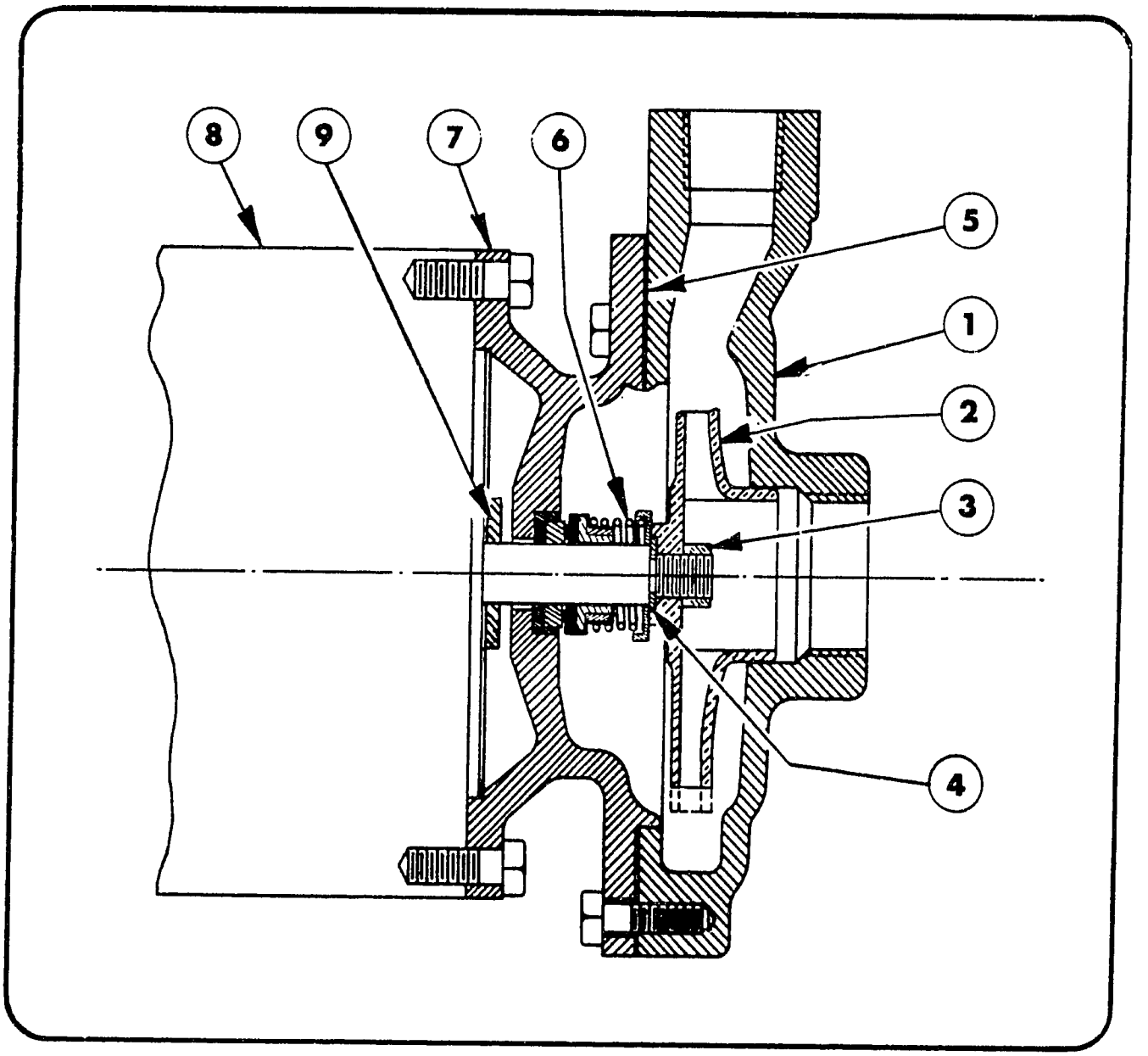

A5 PUMP AND PARTS LIST

1/3 HP, 1/2 HP AND 3/4 HP

	PART NUMBER AND DESCRIPTION	1/3 HP 1" 1φ & 3φ A5C2	1/3 HP 1 1/2" 1φ & 3φ A5C2	1/2 HP 1" 1φ & 3φ A5C2	1/2 HP 1 1/2" 1φ & 3φ A5C2	3/4 HP 3/4" 1φ & 3φ A5C2	3/4 HP 1 1/2" 1φ & 3φ A5C2
1	CASE (CAST IRON) CASE (BRONZE)	E6046 E6078	E6048 E6080	E6045 E6078	E6048 E6080	E6041 E6077	E6048 E6080
2	IMPELLER	D5197x 3 15/16"	D5203x 3 1/4"	D5197x 4 5/16"	D5203x 3 5/8"	D5193x 4 5/16"	D5203x 4 3/32"
3	NUT - IMPELLER	P-116	P-116	P-116	P-116	P-116	P-116
4	WASHER	C8709	C8709	C8709	C8709	C8709	C8709
5	GASKET-CASE *	D5352	D5352	D5352	D5352	D5352	D5352
6	SEAL-SHAFT *	472	472	472	472	472	472
7	HEAD (CAST IRON) HEAD (BRONZE)	E6042 E6081	E6042 E6081	E6042 E6081	E6042 E6081	E6042 E6081	E6042 E6081
8	MOTOR	Contact Dunham-Bush, Inc., Marshalltown, Iowa					
9	SLINGER	C8854	C8854	C8854	C8854	C8854	C8854

NOTES: 1. NON-STANDARD pump parts are not shown. When ordering repair parts, refer to page 1 of this catalog.
2. * = These parts are required when replacing shaft seal.

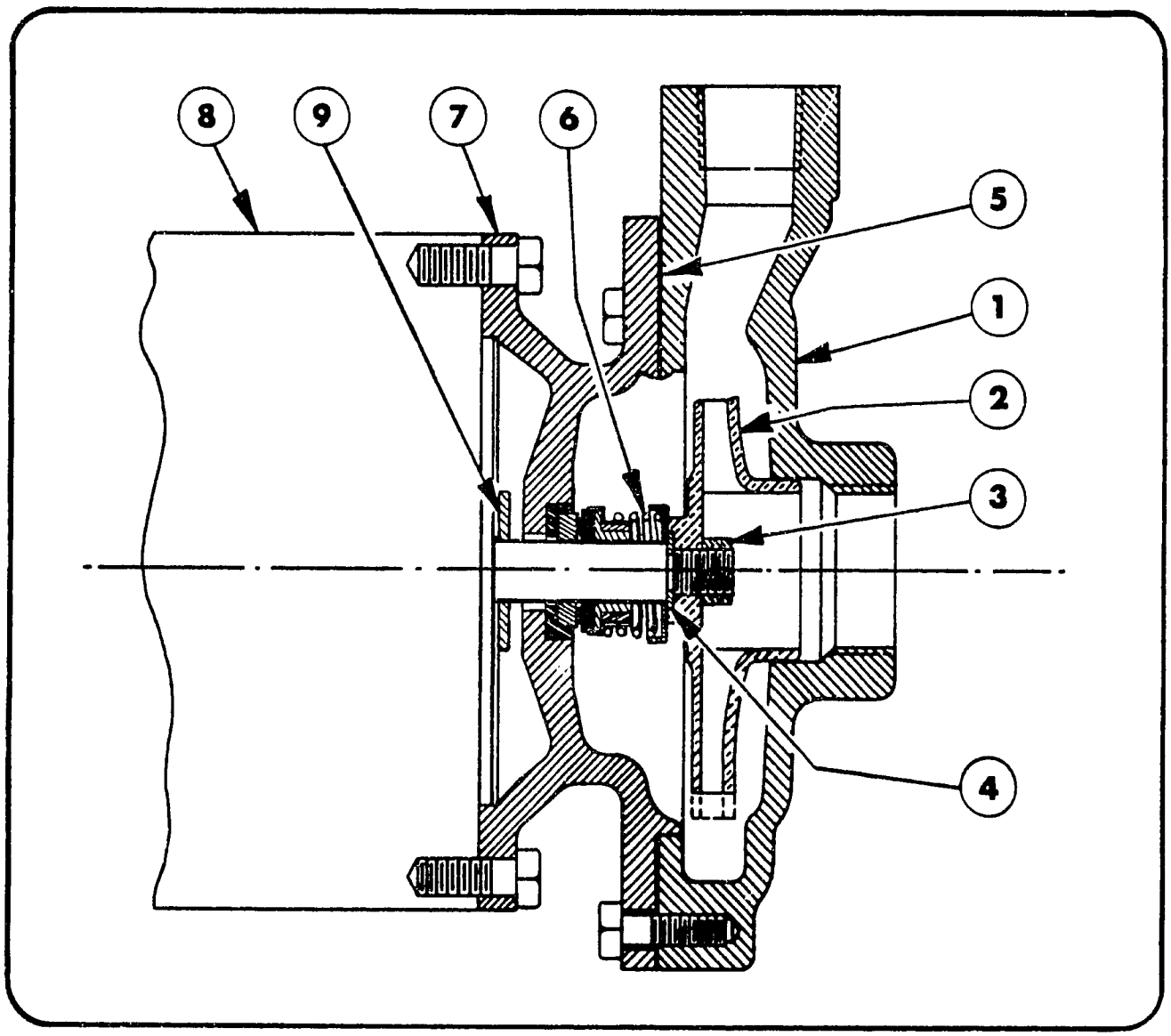

A5 PUMP AND PARTS LIST

1 HP, 1½ HP AND 2 HP

	PART NUMBER AND DESCRIPTION	1 HP ¾" 1φ & 3φ A5A2	1 HP 1½" 1φ & 3φ A5C2	1½ HP ¾" 1φ & 3φ A5A2	1½ HP 1¼" 1φ & 3φ A5B2	2 HP 1" 1φ & 3φ A5A2	2 HP 1¼" 1φ & 3φ A5B2	2 HP 1½" 1φ & 3φ A5B2
1	CASE (CAST IRON) CASE (BRONZE)	E6041 E6077	E6048 E6080	E6041 E6077	E6047 E6079	E6046 E6078	E6047 E6079	E6048 E6080
2	IMPELLER	D5193x 4 9/16"	D5203x 4 5/16"	D5193x 5"	D5199x 4 1/8"	D5195x 4 1/2"	D5199x 4 1/2"	D5202x 4 1/8"
3	NUT–IMPELLER	P-116	P-116	P-116	P-116	P-116	P-116	P-116
4	WASHER	C8709	C8709	C8709	C8709	C8709	C8709	C8709
5	GASKET–CASE *	D5352	D5352	D5352	D5352	D5352	D5352	D5352
6	SEAL–SHAFT*	472	472	472	472	472	472	472
7	HEAD (CAST IRON) HEAD (BRONZE)	E6042 E6081	E6042 E6081	E6042 E6081	E6042 E6081	E6042 E6081	E6042 E6081	E6042 E6081
8	MOTOR	Contact Dunham-Bush, Inc., Marshalltown, Iowa						
9	SLINGER	C8854	C8854	C8854	C8854	C8854	C8854	C8854

NOTES: 1. NON-STANDARD pump parts are not shown. When ordering repair parts, refer to page 1 of this catalog.
2. * = These parts are required when replacing shaft seal.

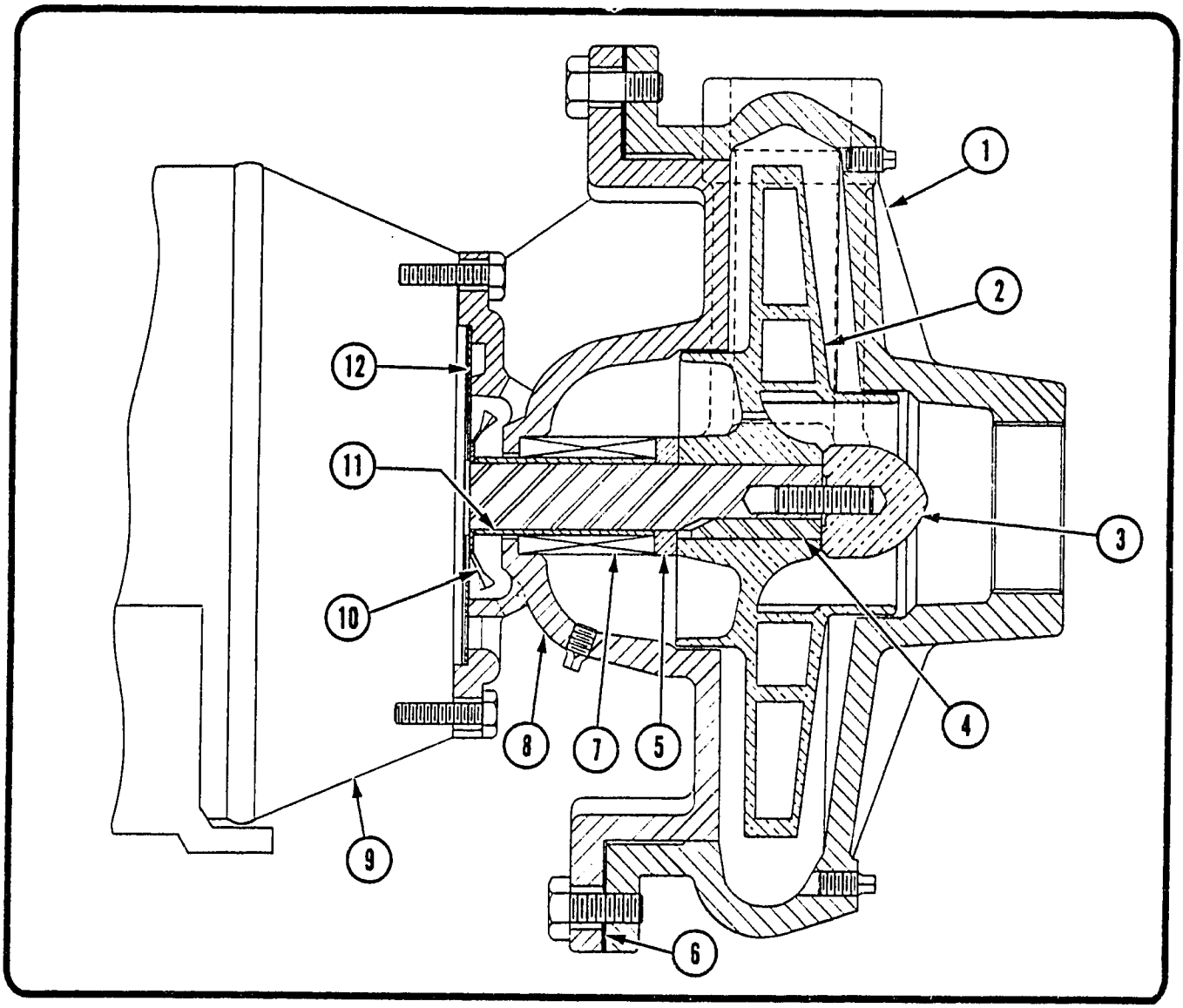

A9 PUMP AND PARTS LIST—½ HP, ¾ HP AND 1 HP

	PART	½ HP 1" 1ϕ & 3ϕ A9C1	¾ HP 1" 1ϕ & 3ϕ A9C1	¾ HP 1¼" 1ϕ & 3ϕ A9D1	1 HP 1" 1ϕ & 3ϕ A9C1	1 HP 1¼" 1ϕ & 3ϕ A9D1	1 HP 2" 1ϕ & 3ϕ A9D1
1	*CASE (CAST IRON) *CASE (BRONZE)	F541 D2-76	F541 D2-76	F540 D2-74	F541 D2-76	F540 D2-74	F544 D2-80
2	IMPELLER	C2-73x 6 1/16"	C2-73x 6¾"	E6181x 4 13/16"	C2-73x 7 3/16"	E6181x 5 13/32"	E6188x 5⅜"
3	STUD & NUT ASSEMBLY	C10035 C8938	C10035 C8938	C10035 C8938	C10035 C8938	C10035 C8938	C10035 C8938
4	KEY	C10025	C10025	C10025	C10025	C10025	C10025
5	SEAL SPACER	C10060	C10060	C10060	C10060	C10060	C10060
6	GASKET	D5450	D5450	D5450	D5450	D5450	D5450
7	SHAFT SEAL	860	860	860	860	860	860
8	*HEAD (CAST IRON) *HEAD (BRONZE)	F539 D2-77	F539 D2-77	F539 D2-77	F539 D2-77	F539 D2-77	F539 D2-77
9	MOTOR	Contact Dunham-Bush, Inc., Marshalltown, Iowa					
10	SLINGER	C10037	C10037	C10037	C10037	C10037	C10037
11	SLEEVE	C10062	C10062	C10062	C10062	C10062	C10062
12	SHIELD	C8958	C8958	C8958	C8958	C8958	C8958

NOTE NON-STANDARD repair parts are not shown, when ordering furnish serial number. Complete ordering instructions are found on Page 1.

* When replacing item No. 8, head, before serial number 6605, item No. 1, case, must also be replaced.

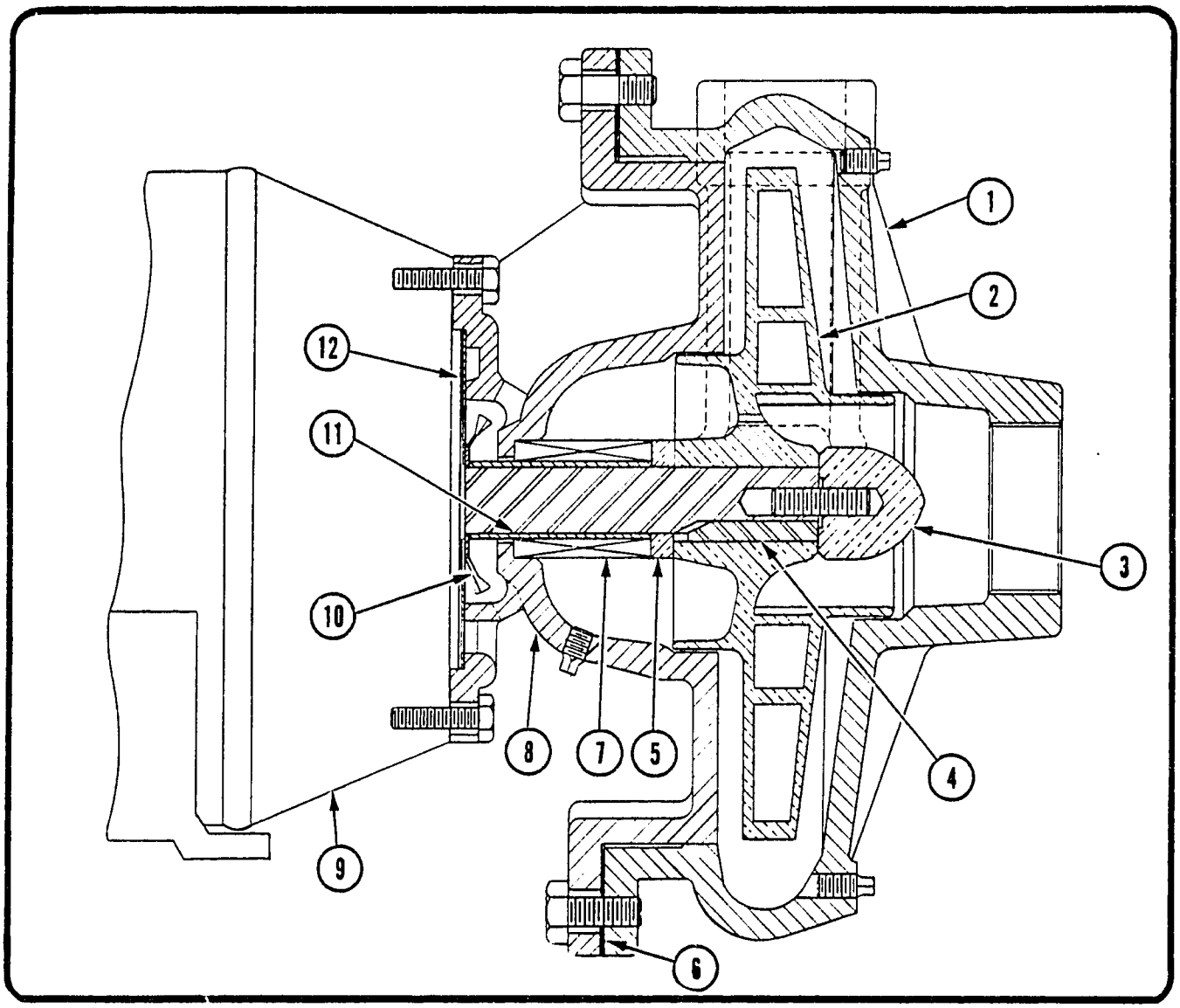

A9 PUMP AND PARTS LIST-1½ HP

	PART	1½ HP 1" 1ϕ & 3ϕ A9C1	1½ HP 1¼" 1ϕ & 3ϕ A9D1	1½ HP 2" 1ϕ & 3ϕ A9D1	1½ HP 2½" 1ϕ & 3ϕ A9E2	1½ HP 2½" 1ϕ & 3ϕ A9D1
1	*CASE (CAST IRON) *CASE (BRONZE)	F541 D2-76	F540 D2-74	F544 D2-80	F545 D2-79	F545 D2-79
2	IMPELLER	C2-73x 8 7/16"	E6181x 6 3/8"	E6188x 5 29/32"	E6184x 3 15/16"	E6204x 5 21/32"
3	STUD & NUT ASSEMBLY	C10035 C8938	C10035 C8938	C10035 C8938	C10035 C8938	C10035 C8938
4	KEY	C10025	C10025	C10025	C10025	C10025
5	SEAL SPACER	C10060	C10060	C10060	C10060	C10060
6	GASKET	D5450	D5450	D5450	D5450	D5450
7	SHAFT SEAL	860	860	860	860	860
8	*HEAD (CAST IRON) *HEAD (BRONZE)	F539 D2-77	F539 D2-77	F539 D2-77	F539 D2-77	F539 D2-77
9	MOTOR	Contact Dunham-Bush, Inc., Marshalltown, Iowa				
10	SLINGER	C10037	C10037	C10037	C10037	C10037
11	SLEEVE	C10062	C10062	C10062	C10062	C10062
12	SHIELD	C8958	C8958	C8958	C8958	C8958

NOTE: NON-STANDARD repair parts are not shown, when ordering furnish serial number. Complete ordering instructions are found on Page 1.

*When ordering case for 2½" A9E, also show A2-51 Adapter, which must be pressed in the case.

* When replacing item No. 8, head, before serial number 6605, Item No. 1, case, must also be replaced.

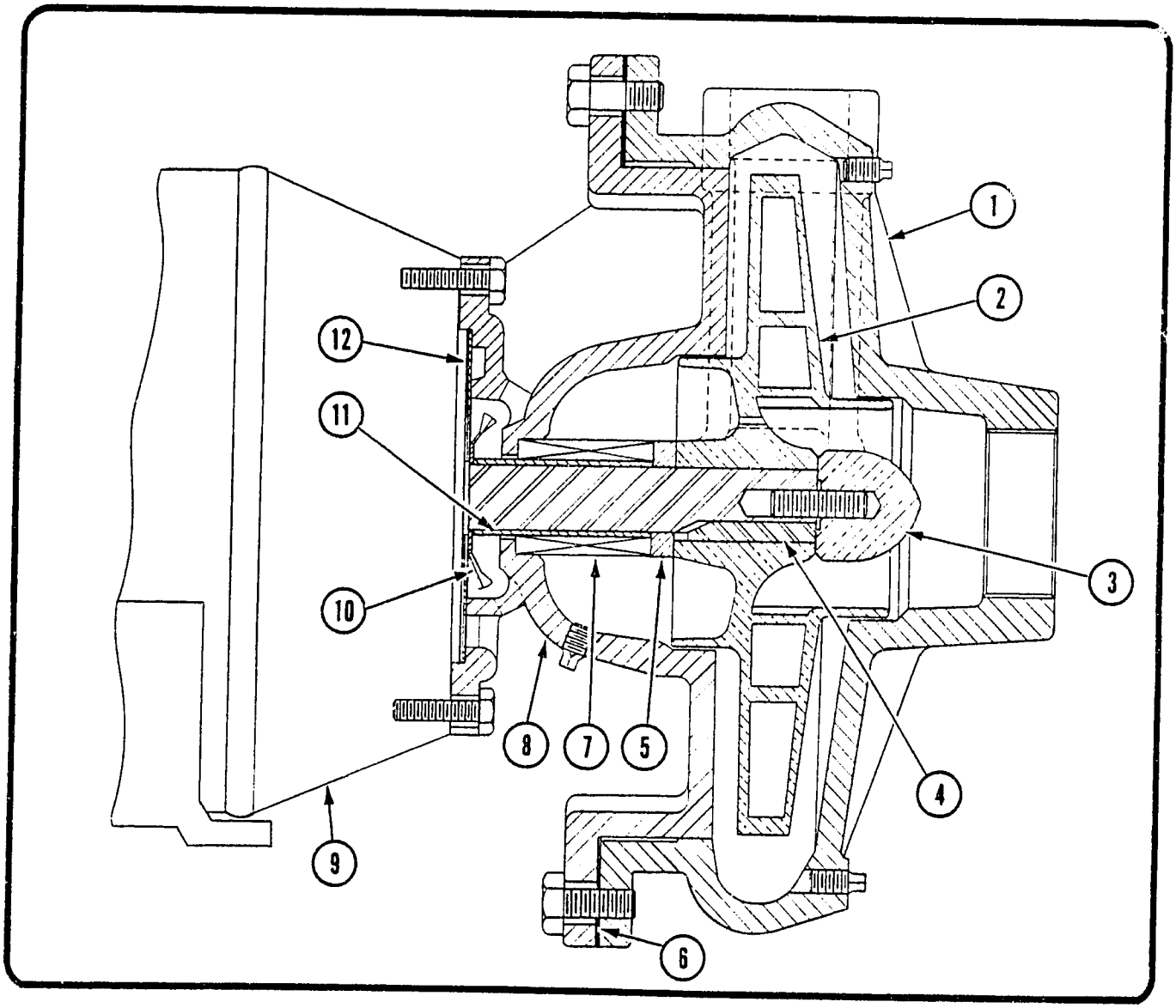

A9 PUMP AND PARTS LIST – 2 HP

	PART	2 HP 1" 1ϕ A9C1	2 HP 1" 3ϕ A9C1	2 HP 1¼" 1ϕ A9D1	2 HP 1¼" 3ϕ A9D1
1	*CASE (CAST IRON) *CASE (BRONZE)	F541 D2-76	F541 D2-76	F540 D2-74	F540 D2-74
2	IMPELLER	C2-73x 9"	C2x73x 9"	E6181x 7 3/16"	E6181x 7 3/16"
3	STUD & NUT ASSEMBLY	C10035 C8938	C10035 C8938	C10035 C8938	C10035 C8938
4	KEY	C10025	C10025	C10025	C10025
5	SEAL SPACER	C10061	C10060	C10061	C10060
6	GASKET	D5450	D5450	D5450	D5450
7	SHAFT SEAL	861	860	861	860
8	*HEAD (CAST IRON) *HEAD (BRONZE)	F546 D2-77	F539 D2-77	F546 D2-78	F539 D2-77
9	MOTOR	Contact Dunham-Bush, Inc., Marshalltown, Iowa			
10	SLINGER	C10038	C10037	C10038	C10037
11	SLEEVE	C10063	C10062	C10063	C10062
12	SHIELD	D5478	C8958	D5478	C8958

NOTE: NON-STANDARD repair parts are not shown, when ordering furnish serial number. Complete ordering instructions are found on Page 1.

*When replacing item No. 8, head, before serial number 6605, item No. 1, case, [illegible] also be replaced.

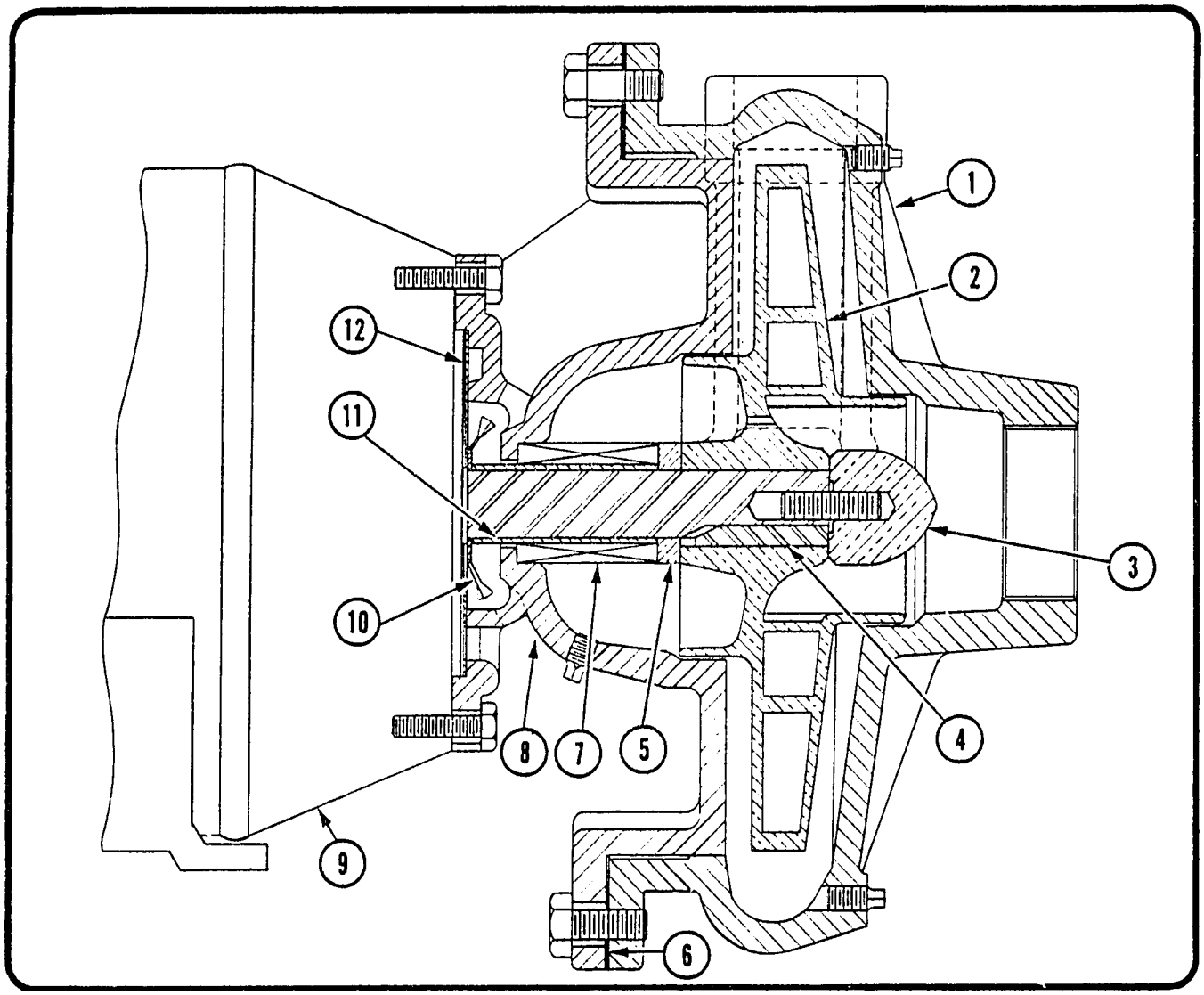

A9 PUMP AND PARTS LIST — 2 HP

	PART	2 HP 2" 1ϕ A9D1	2 HP 2" 3ϕ A9D1	2 HP 2½" 1ϕ A9D1	2 HP 2½" 3ϕ A9D1	2 HP 2½" 1ϕ & 3ϕ A9E2
1	*CASE (CAST IRON) *CASE (BRONZE)	F544 D2-80	F544 D2-80	F545 D2-79	F545 D2-79	F545 D2-79
2	IMPELLER	E6188x 6½"	E6188x 6½"	E6204x 6⅛"	E6204x 6⅛"	E6184x 3 15/16"
3	STUD & NUT ASSEMBLY	C10035 C8938	C10035 C8938	C10035 C8938	C10035 C8938	C10035 C8938
4	KEY	C10025	C10025	C10025	C10025	C10025
5	SEAL SPACER	C10061	C10060	C10061	C10060	C10060
6	GASKET	D5450	D5450	D5450	D5450	D5450
7	SHAFT SEAL	861	860	861	860	860
8	*HEAD (CAST IRON) *HEAD (BRONZE)	F546 D2-78	F539 D2-77	F546 D2-79	F539 D2-79	F539 D2-77
9	MOTOR	Contact Dunham-Bush, Inc., Marshalltown, Iowa				
10	SLINGER	C10038	C10037	C10038	C10037	C10037
11	SLEEVE	C10063	C10062	C10063	C10062	C10062
12	SHIELD	D5478	C8958	D5478	C8958	C8958

NOTE: NON-STANDARD repair parts are not shown, when ordering furnish serial number. Complete ordering instructions are found on Page 1.
*When ordering case for 2½" A9E, also show A2-51 Adapter, which must be pressed in the case.
When replacing item No. 8, head, before serial number 6605, item No. 1, case, must also be replaced.

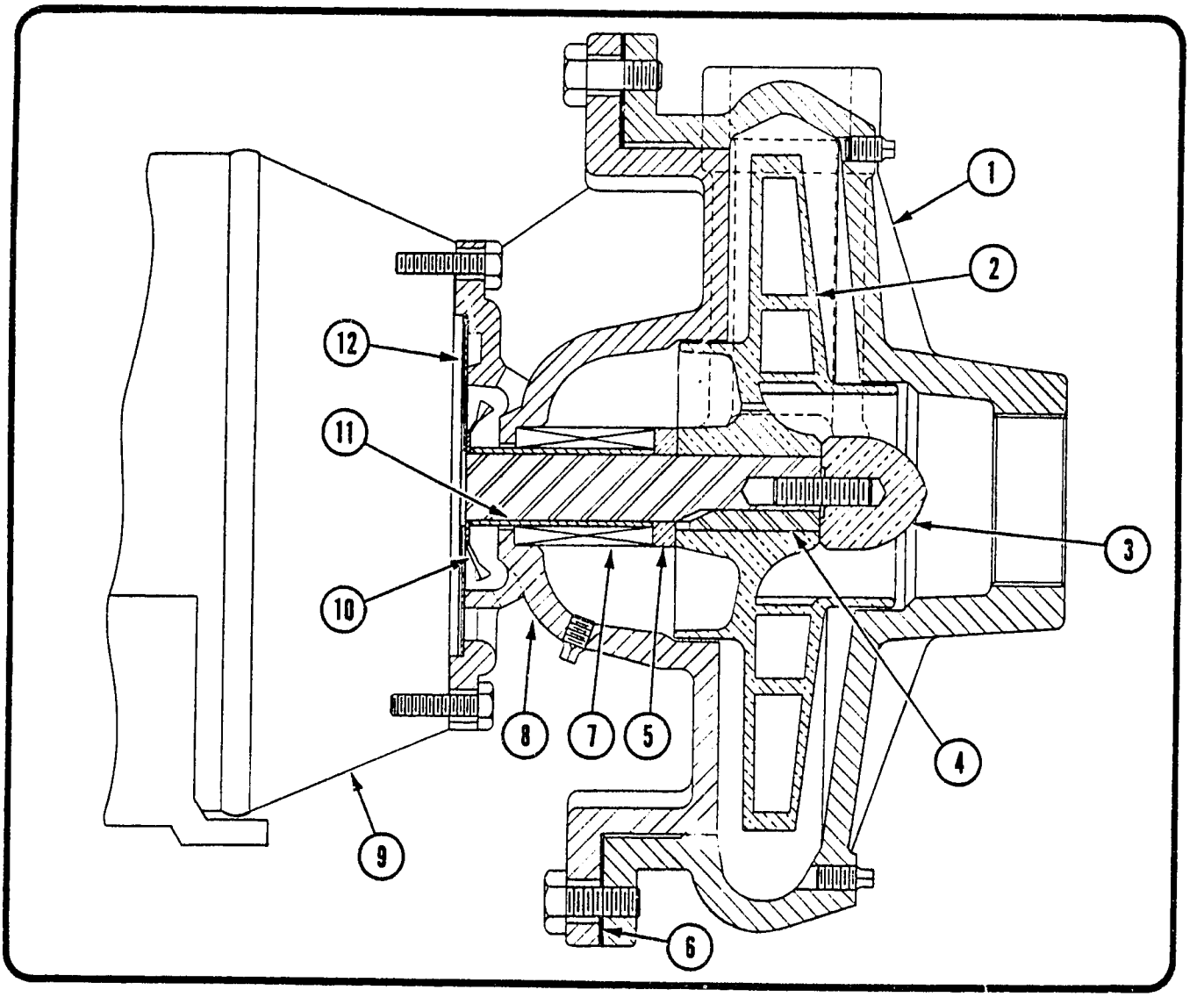

A9 PUMP AND PARTS LIST – 3 HP

	PART	3 HP 1" 3ϕ A9D2	3 HP 1" 3ϕ A9C2	3 HP 1¼" 3ϕ A9D1	3 HP 1¼" 3ϕ A9D2	3 HP 2" 3ϕ A9D1	3 HP 2½" 3ϕ A9D1	3 HP 2½" 3ϕ A9E2
1	*CASE (CAST IRON) *CASE (BRONZE)	F541 D2-76	F541 D2-76	F540 D2-74	F540 D2-74	F544 D2-80	F545 D2-79	F545 D2-79
2	IMPELLER	E6141x 5¼"	C2-73x 6 1/16"	E6181x 8¼"	E6181x 4 7/16"	E6188x 7 1/16"	E6204x 6¾"	E6184x 4¼"
3	STUD & NUT ASSEMBLY	C10035 C8938	C10035 C8938	C10035 C8938	C10035 C8938	C10035 C8938	C10035 C8938	C10035 C8938
4	KEY	C10025	C10025	C10025	C10025	C10025	C10025	C10025
5	SEAL SPACER	C10060	C10060	C10061	C10060	C10061	C10061	C10060
6	GASKET	D5450	D5450	D5450	D5450	D5450	D5450	D5450
7	SHAFT SEAL	860	860	861	860	861	861	860
8	*HEAD (CAST IRON) *HEAD (BRONZE)	F539 D2-77	F539 D2-77	F546 D2-78	F539 D2-77	F546 D2-78	F546 D2-78	F539 D2-77
9	MOTOR	Contact Dunham-Bush, Inc., Marshalltown, Iowa						
10	SLINGER	C10037	C10037	C10038	C10037	C10038	C10038	C10037
11	SLEEVE	C10062	C10062	C10063	C10062	C10063	C10063	C10062
12	SHIELD	C8958	C8958	D5478	C8958	D5478	D5478	C8958

NOTE: NON-STANDARD repair parts are not shown, when ordering furnish serial number. Complete ordering instructions are found on Page 1.
*When replacing item No. 8, head, before serial number 6605, item No. 1, case, must also be replaced.

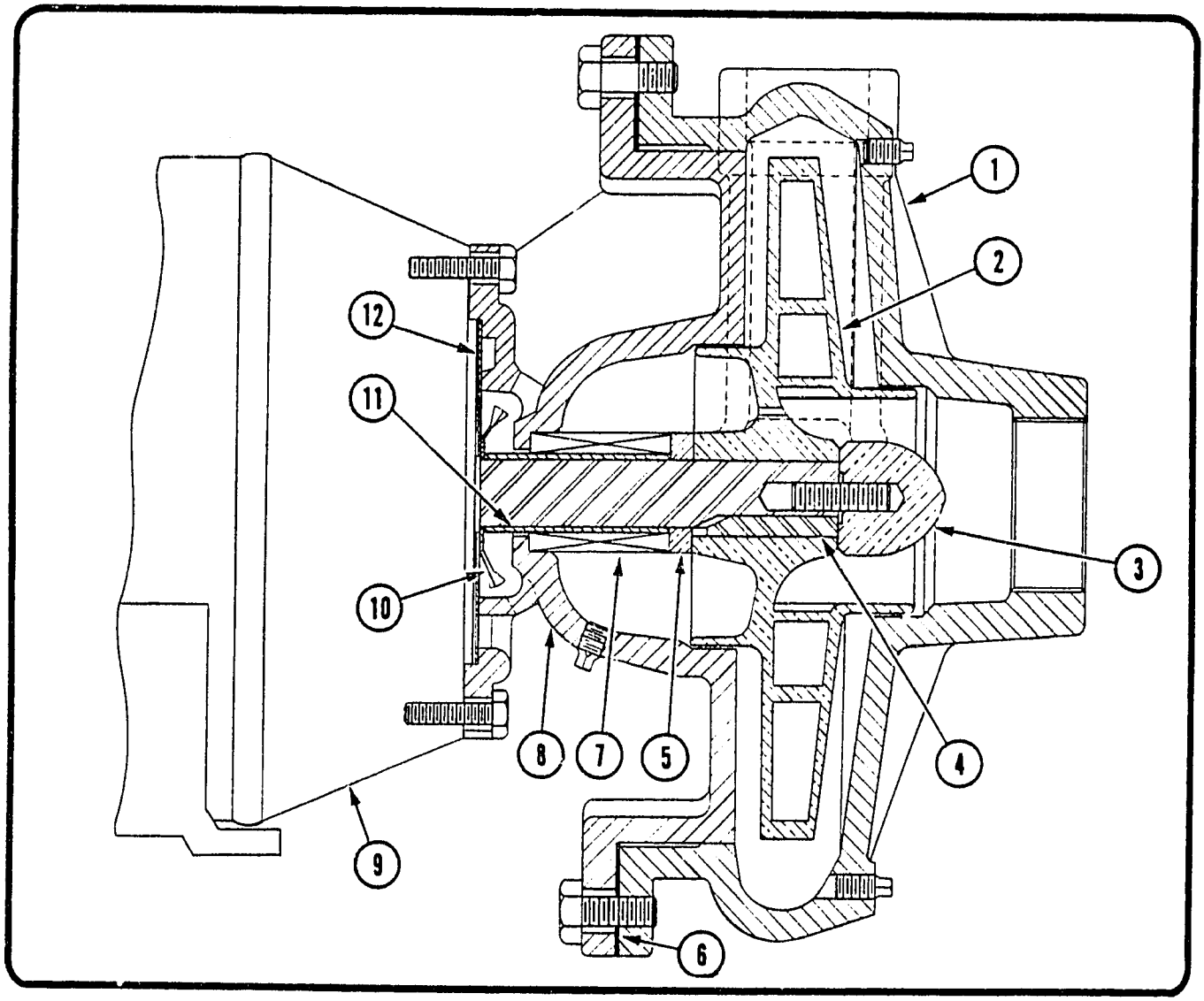

A9 PUMP AND PARTS LIST — 5 HP

PART	5 HP 1" 3ϕ A9C2	5 HP 1" 3ϕ A9D2	5 HP 1¼" 3ϕ A9D2	5 HP 2" 3ϕ A9D1	5 HP 2" 3ϕ A9D2	5 HP 2½" 3ϕ A9D1	5 HP 2½" 3ϕ A9D2
1 *CASE (CAST IRON) *CASE (BRONZE)	F541 D2-76	F541 D2-76	F540 D2-74	F544 D2-80	F544 D2-80	F545 D2-79	F545 D2-79
2 IMPELLER	C2-73x 6 9/16"	E6141x 5 7/8"	E6181x 5 13/32"	E6188x 8 7/16"	E6188x 4 15/16"	E6204x 7 15/16"	E6204x 4 3/4"
3 STUD & NUT ASSEMBLY	C10035 C8938	C10035 C8938	C10035 C8938	C10035 C8938	C10035 C8938	C10035 C8938	C10035 A2-672
4 KEY	C10025	C10025	C10025	C10025	C10025	C10025	C10025
5 SEAL SPACER	C10061	C10061	C10061	C10061	C10061	C10061	C10061
6 GASKET	D5450	D5450	D5450	D5450	D5450	D5450	D5450
7 SHAFT SEAL	861	861	861	861	861	861	861
8 *HEAD (CAST IRON) *HEAD (BRONZE)	F546 D2-78	F546 D2-78	F546 D2-78	F546 D2-78	F546 D2-78	F546 D2-78	F546 D2-78
9 MOTOR	Contact Dunham-Bush, Inc., Marshalltown, Iowa						
10 SLINGER	C10038	C10038	C10038	C10038	C10038	C10038	C10038
11 SLEEVE	C10063	C10063	C10063	C10063	C10063	C10063	C10063
12 SHIELD	D5478	D5478	D5478	D5478	D5478	D5478	D5478

NOTE: NON-STANDARD repair parts are not shown, when ordering furnish serial number. Complete ordering instructions are found on Page 1.

When replacing item No. 8, head, before serial number 6605, item No. 1, case, must also be replaced.

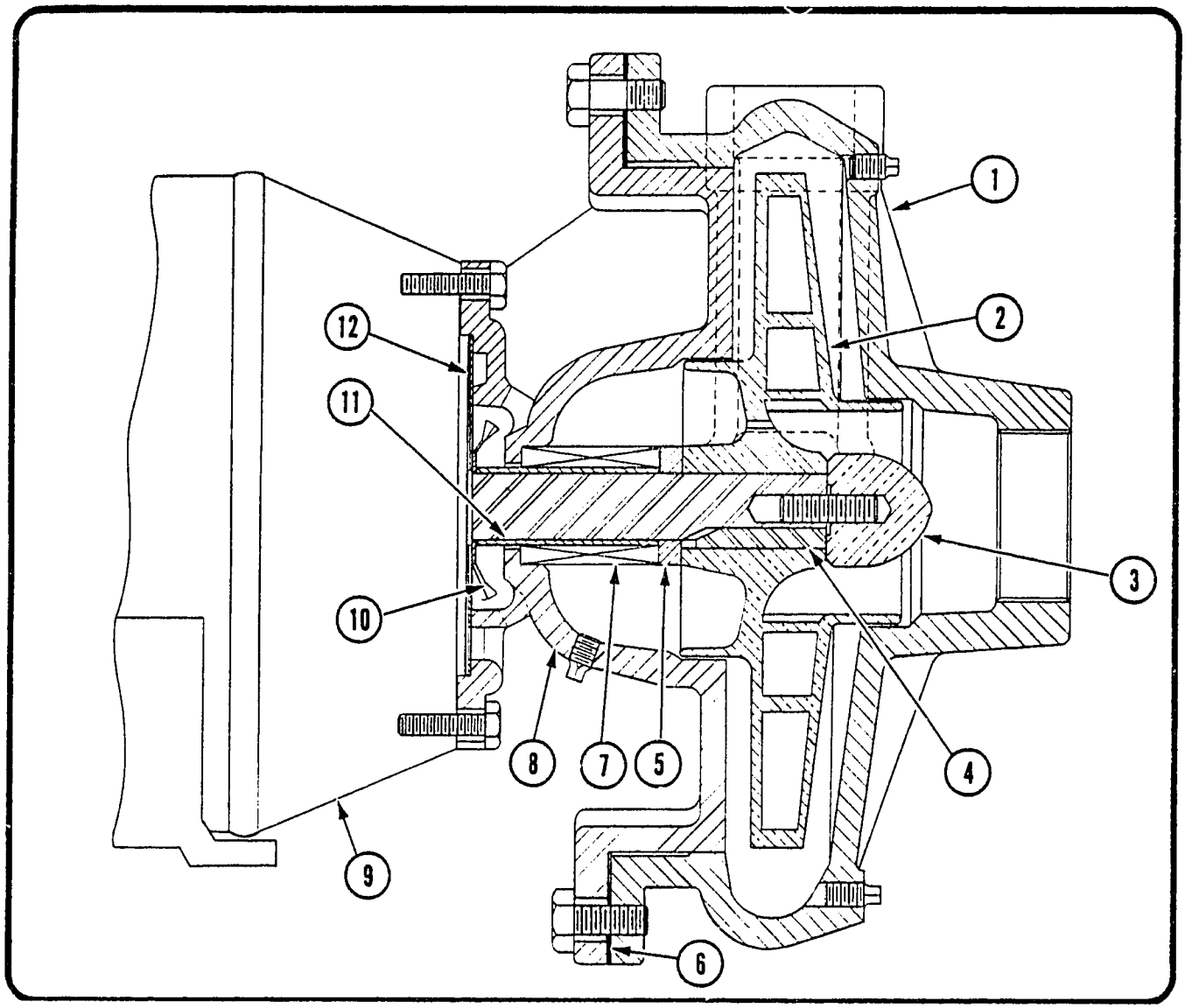

A9 PUMP AND PARTS LIST - 7½ HP

	PART	7½ HP 1¼" 3ϕ A9D2	7½ HP 2" 3ϕ A9D2	7½ HP 2½" 3ϕ A9D1	7½ HP 2½" 3ϕ A9D2
1	*CASE (CAST IRON) *CASE (BRONZE)	F540 D2-74	F544 D2-80	F545 D2-79	F545 D2-79
2	IMPELLER	E6181x 5 13/16"	E6188x 5 9/16"	E6204x 9"	E6204x 5 9/16"
3	STUD & NUT ASSEMBLY	C10035 C8938	C10035 A2-672	C10035 C8938	C10035 A2-672
4	KEY	C10025	C10025	C10025	C10025
5	SEAL SPACER	C10061	C10061	C10061	C10061
6	GASKET	D5450	D5450	D5450	D5450
7	SHAFT SEAL	861	861	861	861
8	*HEAD (CAST IRON) *HEAD (BRONZE)	F546 D2-78	F546 D2-78	F546 D2-78	F546 D2-78
9	MOTOR	Contact Dunham-Bush, Inc., Marshalltown, Iowa			
10	SLINGER	C10038	C10038	C10038	C10038
11	SLEEVE	C10063	C10063	C10063	C10063
12	SHIELD	D5478	D5478	D5478	D5478

NOTE: NON-STANDARD repair parts are not shown, when ordering furnish serial number. Complete ordering instructions are found on Page 1.

*When replacing item No. 8, head, before serial number 6605, item No. 1, case, must also be replaced.

815

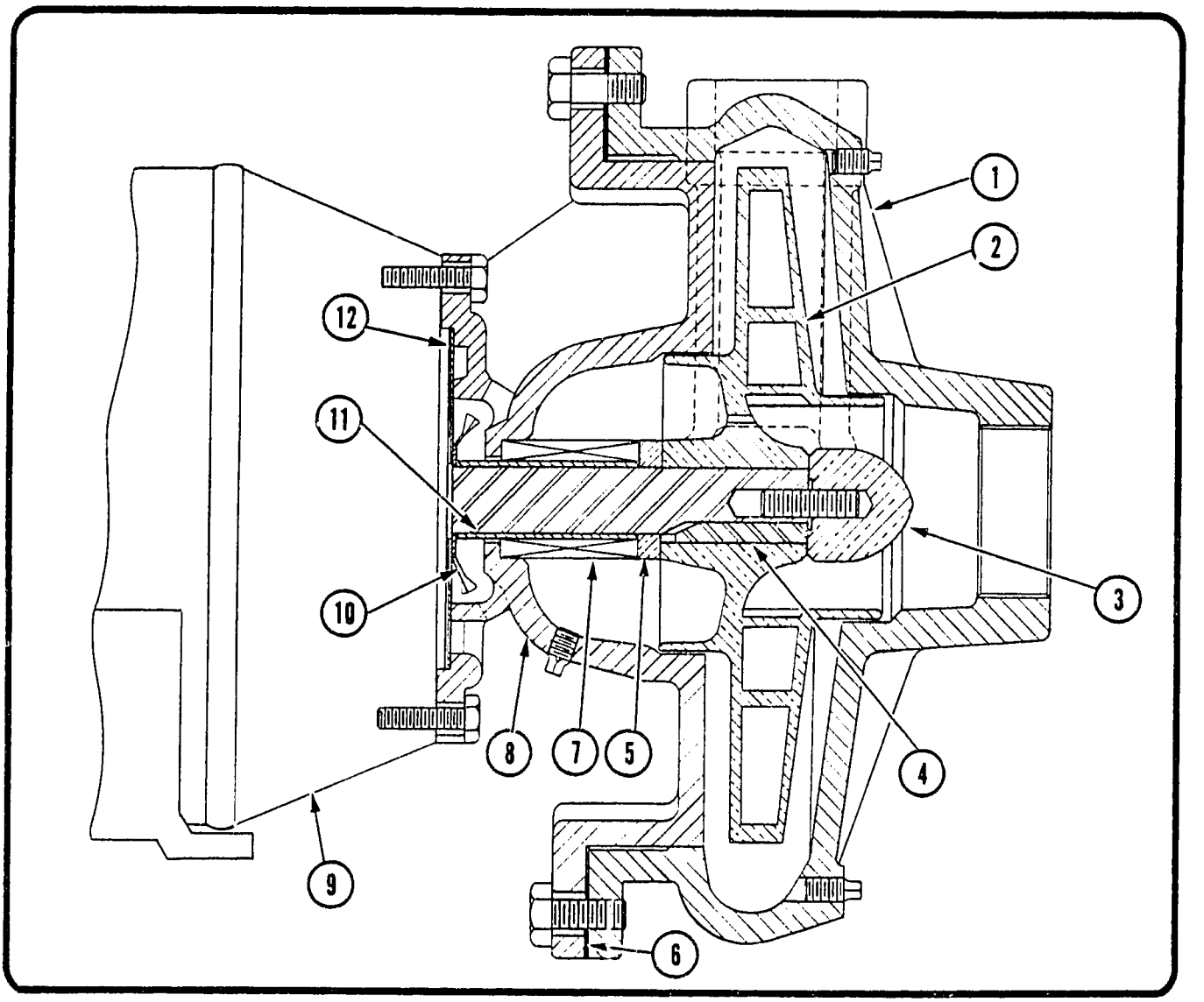

A9 PUMP AND PARTS LIST – 10 HP AND 15 HP

	PART	10 HP 1¼" 3ϕ A9D2	10 HP 2" 3ϕ A9D2	10 HP 2½" 3ϕ A9D2	15 HP 2" 3ϕ A9D2
1	*CASE (CAST IRON) *CASE (BRONZE)	F540 D2-74	F544 D2-80	F545 D2-79	F544 D2-80
2	IMPELLER	E6181x 6⅜"	E6188x 5²⁹⁄₃₂"	E6204x 5²¹⁄₃₂"	E6188x 6⁵⁄₁₆"
3	STUD & NUT ASSEMBLY	C10035 C8938	C10035 A2-672	C10035 A2-672	C10035 A2-672
4	KEY	C10025	C10025	C10025	C10025
5	SEAL SPACER	C10061	C10061	C10061	C10061
6	GASKET	D5450	D5450	D5450	D5450
7	SHAFT SEAL	861	861	861	861
8	*HEAD (CAST IRON) *HEAD (BRONZE)	F546 D2-78	F546 D2-78	F546 D2-78	F546 D2-78
9	MOTOR	Contact Dunham-Bush, Inc., Marshalltown, Iowa			
10	SLINGER	C10038	C10038	C10038	C10038
11	SLEEVE	C10063	C10063	C10063	C10063
12	SHIELD	D5478	D5478	D5478	D5478

NOTE: NON-STANDARD repair parts are not shown, when ordering furnish serial number. Complete ordering instructions are found on Page 1.
*When replacing item No. 8, head, before serial number 6605, item No. 1, case, must also be replaced.

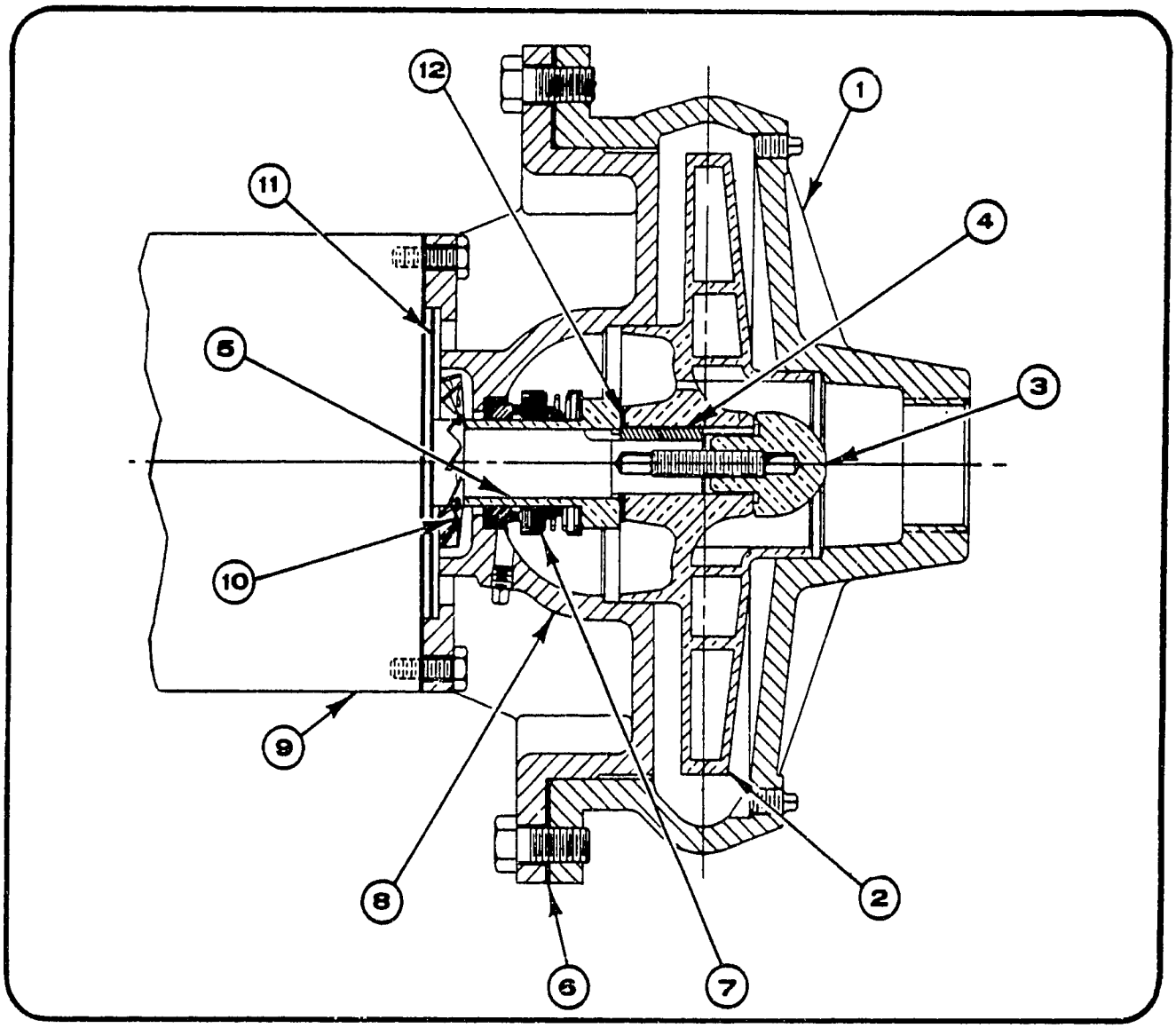

A9 PUMP AND PARTS LIST
SERIES A - ½ HP, ¾ HP AND 1 HP

	PART NUMBER AND DESCRIPTION	½ HP 1" 1φ & 3φ A9C1A	¾ HP 1" 1φ & 3φ A9C1A	¾ HP 1¼" 1φ & 3φ A9D1A	1 HP 1" 1φ & 3φ A9C1A	1 HP 1¼" 1φ & 3φ A9D1A	1 HP 2" 1φ & 3φ A9D1A
1	CASE (CAST IRON) CASE (BRONZE)	F541 D2-76	F541 D2-76	F540 D2-74	F541 D2-76	F540 D2-74	F544 D2-80
2	IMPELLER (BRONZE)	C2-3211X 6 1/16"	C2-3211X 6 3/4"	C2-3213X 4 15/16"	C2-3211X 7 5/16"	C2-3213X 5 15/16"	C2-3214X 5 3/8
3	STUD & NUT ASSEMBLY	C10035 A2-3898	C10035 A2-3898	C10035 A2-3898	C10035 A2-3898	C10035 A2-3898	C10035 A2-3898
4	KEY	C7763	C7763	C7763	C7763	C7763	C7763
5	SLEEVE *	A2-3905	A2-3905	A2-3905	A2-3905	A2-3905	A2-3905
6	GASKET *	D5450	D5450	D5450	D5450	D5450	D5450
7	SHAFT SEAL *	3179	3179	3179	3179	3179	3179
8	HEAD (CAST IRON) HEAD (BRONZE)	D2-1478 D2-1480	D2-1478 D2-1480	D2-1478 D2-1480	D2-1478 D2-1480	D2-1478 D2-1480	D2-1478 D2-1480
9	MOTOR	Contact Dunham-Bush, Inc., Marshalltown, Iowa					
10	SLINGER	C10038	C10038	C10038	C10038	C10038	C10038
11	SHIELD	C8958	C8958	C8958	C8958	C8958	C8958
12	GASKET *	A2-3020	A2-3020	A2-3020	A2-3020	A2-3020	A2-3020

NOTES: 1. NON-STANDARD pump parts are not shown. When ordering repair parts, refer to page 1 of this catalog.
2. * = These parts are required when replacing shaft seal.

317

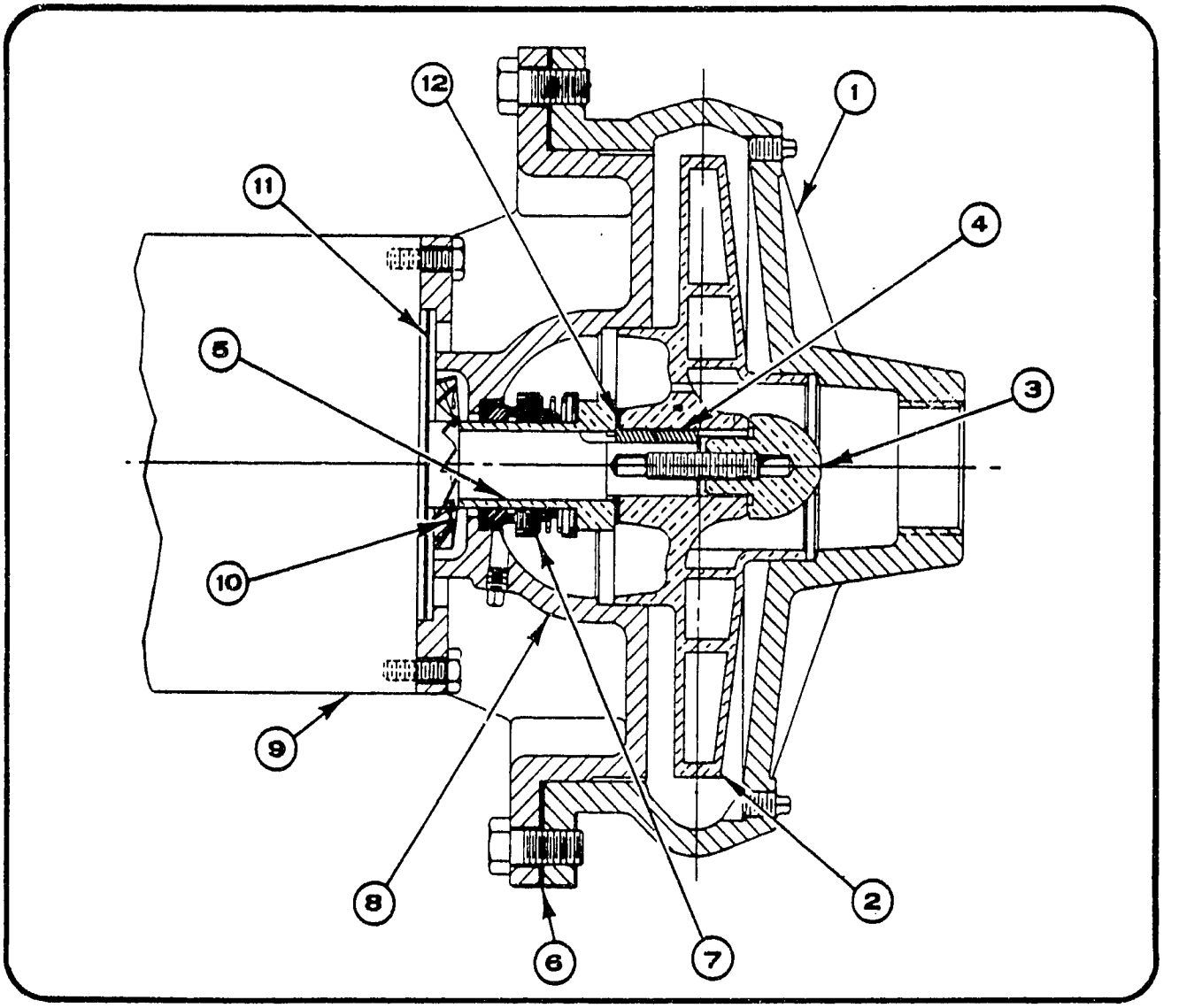

A9 PUMP AND PARTS LIST
SERIES A – 1½ HP

PART NUMBER AND DESCRIPTION	1½ HP 1" 1ϕ & 3ϕ A9C1A	1½ HP 1¼" 1ϕ & 3ϕ A9D1A	1½ HP 2" 1ϕ & 3ϕ A9D1A	1½ HP 2½" 1ϕ & 3ϕ A9D1A
1 CASE (CAST IRON) CASE (BRONZE)	D541 D2-76	F540 D2-74	F544 D2-80	F545 D2-79
2 IMPELLER (BRONZE)	C2-3211X $8^{7}/_{16}$"	C2-3213X $6^{3}/_{8}$"	C2-3214X $5^{29}/_{32}$"	C2-3215X $5^{21}/_{33}$"
3 STUD & NUT ASSEMBLY	C10035 A2-3898	C10035 A2-3898	C10035 A2-3898	C10035 A2-3898
4 KEY	C7763	C7763	C7763	C7763
5 SLEEVE *	A2-3905	A2-3905	A2-3905	A2-3905
6 GASKET *	D5450	D5450	D5450	D5450
7 SHAFT SEAL *	3179	3179	3179	3179
8 HEAD (CAST IRON) HEAD (BRONZE)	D2-1478 D2-1480	D2-1478 D2-1480	D2-1478 D2-1479	D2-1478 D2-1480
9 MOTOR	Contact Dunham-Bush, Inc., Marshalltown, Iowa			
10 SLINGER	C10038	C10038	C10038	C10038
11 SHIELD	C8958	C8958	C8958	C8958
12 GASKET *	A2-3020	A2-3020	A2-3020	A2-3020

NOTES: 1. NON-STANDARD pump parts are not shown. When ordering repair parts, refer to page 1 of this catalog.
2. * = These parts are required when replacing shaft seal.

818

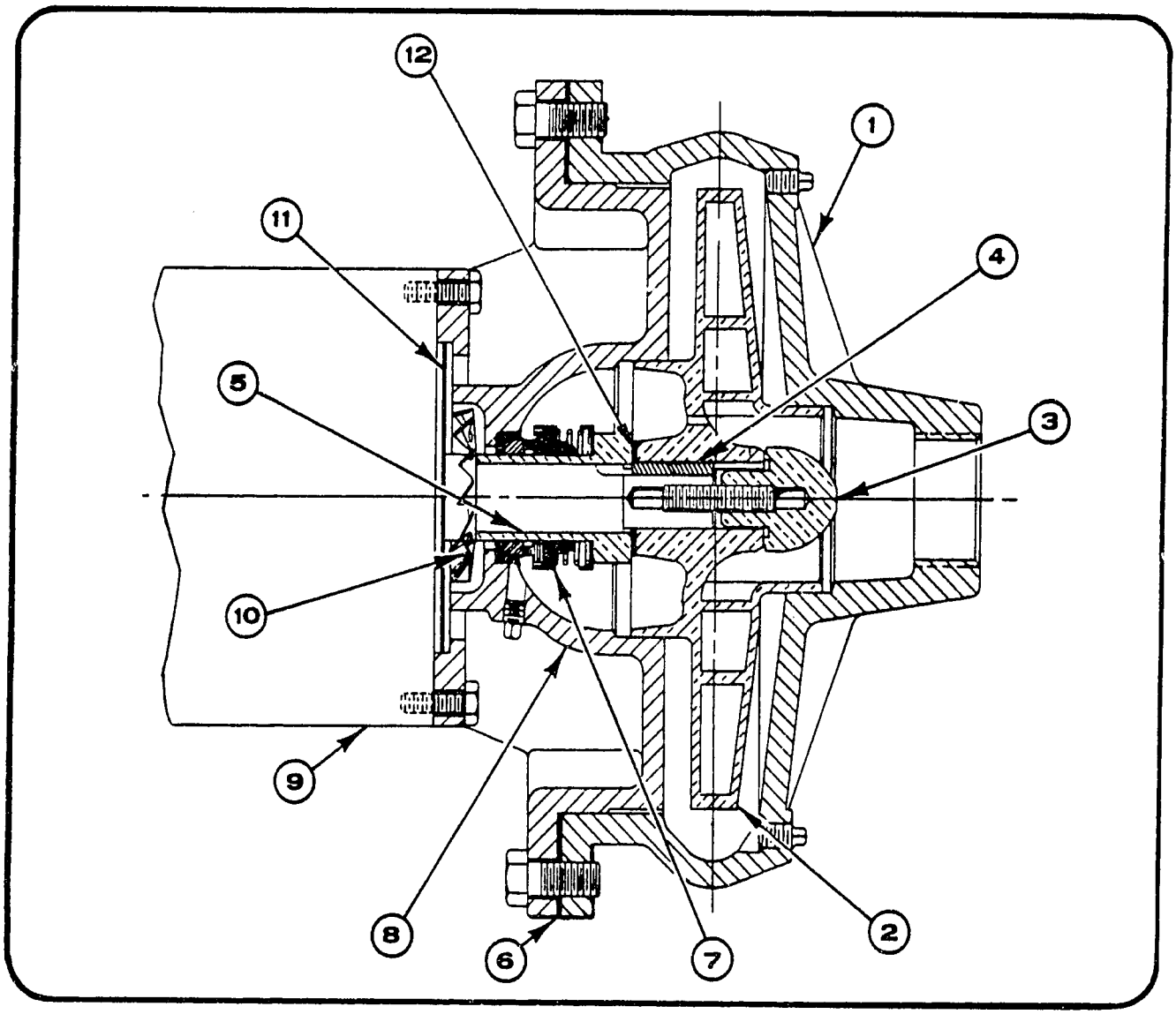

A9 PUMP AND PARTS LIST
SERIES A - 2 HP

PART NUMBER AND DESCRIPTION	2 HP 1" 1ϕ A9C1A	2 HP 1" 3ϕ A9C1A	2 HP 1¼" 1ϕ A9D1A	2 HP 1¼" 3ϕ A9D1A	2 HP 2" 1ϕ D9D1A	2 HP 2" 3ϕ A9D1A	2 HP 2½" 1ϕ A9D1A	2 HP 2½" 3ϕ A9D1A
1 CASE (CAST IRON) CASE (BRONZE)	F541 D2-76	F541 D2-76	F540 D2-74	F540 D2-74	F544 D2-80	F544 D2-80	F545 D2-79	F545 D2-79
2 IMPELLER (BRONZE)	C2-3211X 9"	C2-3211X 9"	C2-3213X $7^3/_{16}$"	C2-3213X $7^3/_{16}$"	C2-3214X $6^1/_2$"	C2-3214X $6^1/_2$"	C2-3215X $6^1/_8$"	C2-3215X $6^1/_8$"
3 STUD & NUT ASSEMBLY	C10035 A2-3898	C10035 A2-3898	C10035 A2-3898	C10035 A2-3898	C10035 A2-3898	C10035 A2-3898	C10035 A2-3898	C10035 A2-3898
4 KEY	C7763	C7763	C7763	C7763	C7763	C7763	C7763	C7763
5 SLEEVE *	A2-3905	A2-3905	A2-3905	A2-3905	A2-3905	A2-3905	A2-3905	A2-3905
6 GASKET *	D5450	D5450	D5450	D5450	D5450	D5450	D5450	D5450
7 SHAFT SEAL *	3179	3179	3179	3179	3179	3179	3179	3179
8 HEAD (CAST IRON) HEAD (BRONZE)	D2-1478 D2-1480	D2-1478 D2-1480	D2-1478 D2-1480	D2-1478 D2-1480	D2-1478 D2-1480	D2-1478 D2-1480	D2-1478 D2-1480	D2-1478 D2-1480
9 MOTOR	Contact Dunham-Bush, Inc., Marshalltown, Iowa							
10 SLINGER	C10038	C10038	C10038	C10038	C10038	C10038	C10038	C10038
11 SHIELD	C8958	C8958	C8958	C8958	C8958	C8958	C8958	C8958
12 GASKET *	A2-3020	A2-3020	A2-3020	A2-3020	A2-3020	A2-3020	A2-3020	A2-3020

NOTES: 1. NON-STANDARD pump parts are not shown. When ordering repair parts, refer to page 1 of this catalog.
2. * = These parts are required when replacing shaft seal.

819

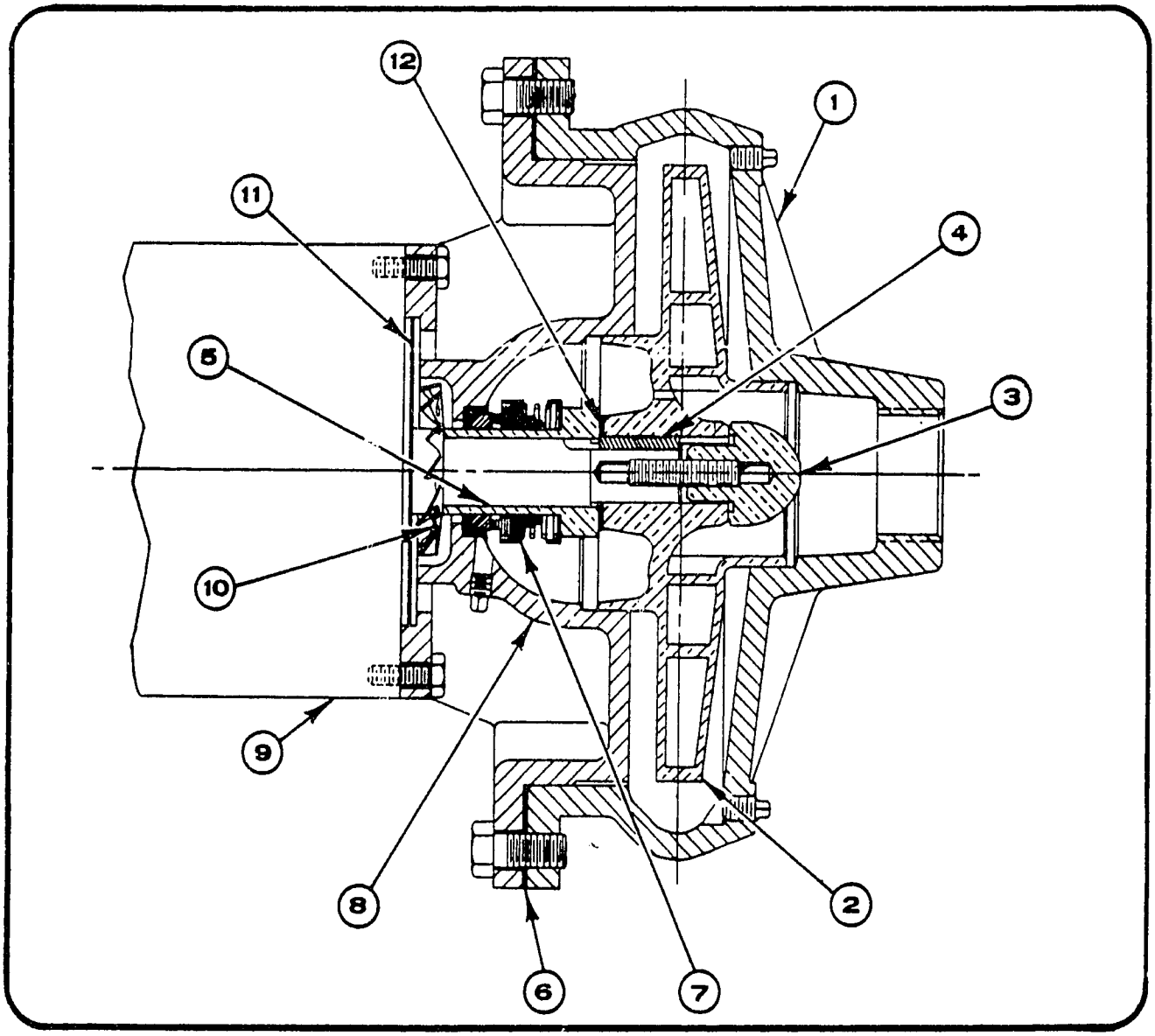

A9 PUMP AND PARTS LIST SERIES A - 3 HP

PART NUMBER AND DESCRIPTION	3 HP 1" 3ϕ A9D2A	3 HP 1" 3ϕ A9C2A	3 HP 1¼" 3ϕ A9D1A	3 HP 1¼" 3ϕ A9D2A	3 HP 2" 3ϕ A9D1A	3 HP 2½" 3ϕ A9D1A
1 CASE (CAST IRON) CASE (BRONZE)	F541 D2-76	F541 D2-76	F540 D2-74	F540 D2-74	F544 D2-80	F545 D2-79
2 IMPELLER (BRONZE)	C2-3212X 5¼"	C2-3211X 6 1/16"	C2-3213X 8¼"	C2-3213X 4 7/16"	C2-3214X 7 1/16"	C2-3215X 6¾"
3 STUD & NUT ASSEMBLY	C10035 A2-3898	C10035 A2-3898	C10035 A2-3898	C10035 A2-3898	C10035 A2-3898	C10035 A2-3898
4 KEY	C7763	C7763	C7763	C7763	C7763	C7763
5 SLEEVE *	A2-3905	A2-3905	A2-3905	A2-3905	A2-3905	A2-3905
6 GASKET *	D5450	D5450	D5450	D5450	D5450	D5450
7 SHAFT SEAL *	3179	3179	3179	3179	3179	3179
8 HEAD (CAST IRON) HEAD (BRONZE)	D2-1478 D2-1480	D2-1478 D2-1480	D2-1478 D2-1480	D2-1478 D2-1480	D2-1478 D2-1480	D2-1478 D2-1480
9 MOTOR	Contact Dunham-Bush, Inc., Marshalltown, Iowa					
10 SLINGER	C10038	C10038	C10038	C10038	C10038	C10038
11 SHIELD	C8958	C8958	C8958	C8958	C8958	C8958
12 GASKET *	A2-3020	A2-3020	A2-3020	A2-3020	A2-3020	A2-3020

NOTES: 1. NON-STANDARD pump parts are not shown. When ordering repair parts, refer to page 1 of this catalog.
2. * = These parts are required when replacing shaft seal.

820

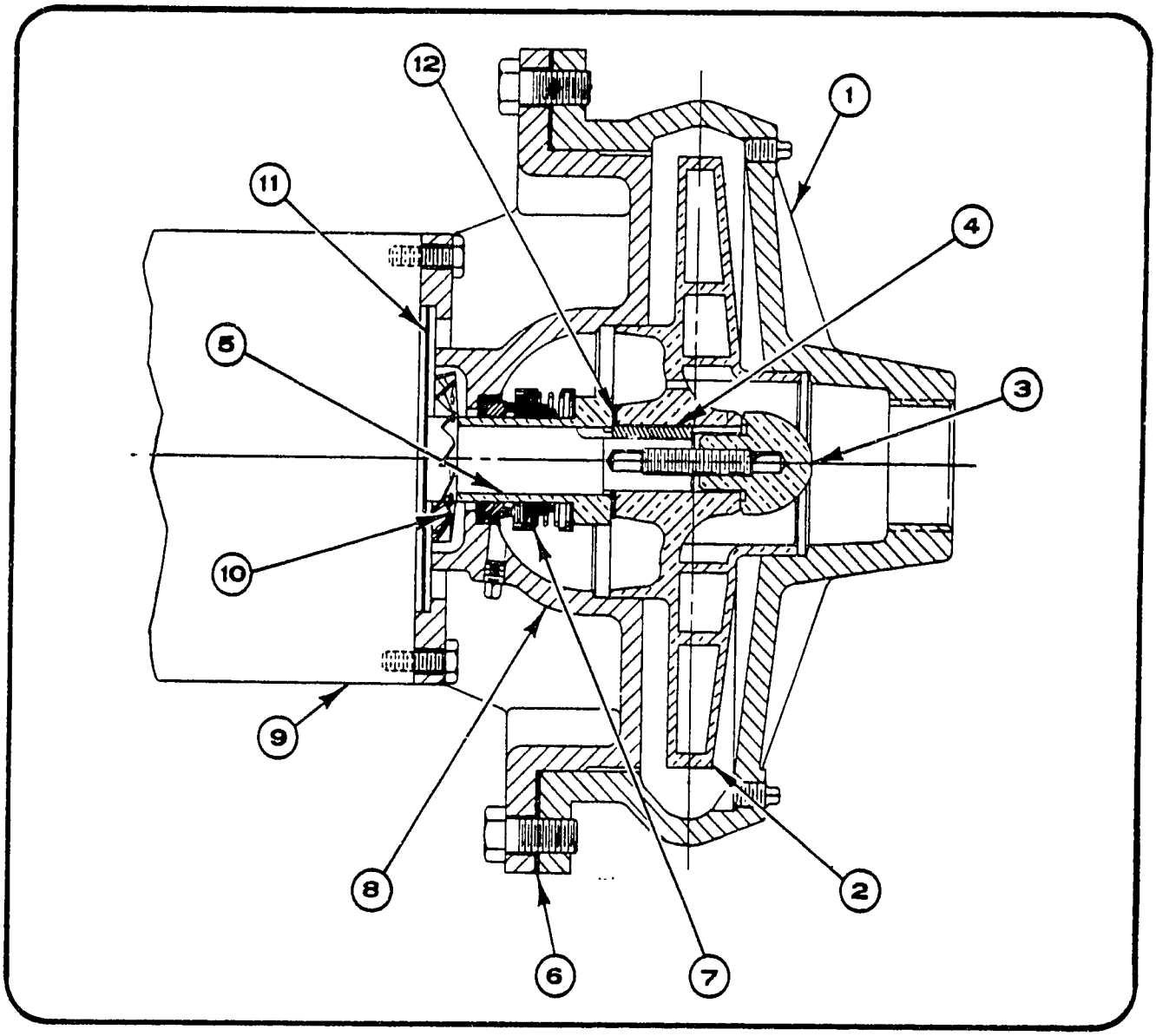

A9 PUMP AND PARTS LIST SERIES A – 5 HP

PART NUMBER AND DESCRIPTION	5 HP 1" 3ϕ A9C2A	5 HP 1" 3ϕ A9D2A	5 HP 1¼" 3ϕ A9D2A	5 HP 2" 3ϕ A9D1A	5 HP 2" 3ϕ A9D2A	5 HP 2½" 3ϕ A9D1A	5 HP 2½" 3ϕ A9D2A
1 CASE (CAST IRON) CASE (BRONZE)	F541 D2-76	F541 D2-76	F540 D2-74	F544 D2-80	F544 D2-80	F545 D2-79	F545 D2-79
2 IMPELLER (BRONZE)	C2-3211X $6^{9}/_{16}$"	C2-3212X $5^{7}/_{8}$"	C2-3213X $5^{15}/_{32}$"	C2-3214X $8^{7}/_{16}$"	C2-3214X $4^{15}/_{16}$"	C2-3215X $7^{15}/_{16}$"	C2-3215X $4^{3}/_{4}$"
3 STUD & NUT ASSEMBLY	C10035 A2-3898	C10035 A2-3898	C10035 A2-3898	C10035 A2-3899	C10035 A2-3899	C10035 A2-3899	C10035 A2-3899
4 KEY	C7763	C7763	C7763	C7763	C7763	C7763	C7763
5 SLEEVE *	A2-3905	A2-3905	A2-3905	A2-3905	A2-3905	A2-3905	A2-3905
6 GASKET *	D5450	D5450	D5450	D5450	D5450	D5450	D5450
7 SHAFT SEAL*	3179	3179	3179	3179	3179	3179	3179
8 HEAD (CAST IRON) HEAD (BRONZE)	D2-1478 D2-1480	D2-1478 D2-1480	D2-1478 D2-1480	D2-1478 D2-1480	D2-1478 D2-1480	D2-1478 D2-1480	D2-1478 D2-1480
9 MOTOR	Contact Dunham-Bush, Inc., Marshalltown, Iowa						
10 SLINGER	C10038	C10038	C10038	C10038	C10038	C10038	C10038
11 SHIELD	C8958	C8958	C8958	C8958	C8958	C8958	C8958
12 GASKET *	A2-3020	A2-3020	A2-3020	A2-3020	A2-3020	A2-3020	A2-3020

NOTES: 1. NON-STANDARD pump parts are not shown. When ordering repair parts, refer to page 1 of this catalog.
2. * = These parts are required when replacing shaft seal.

821

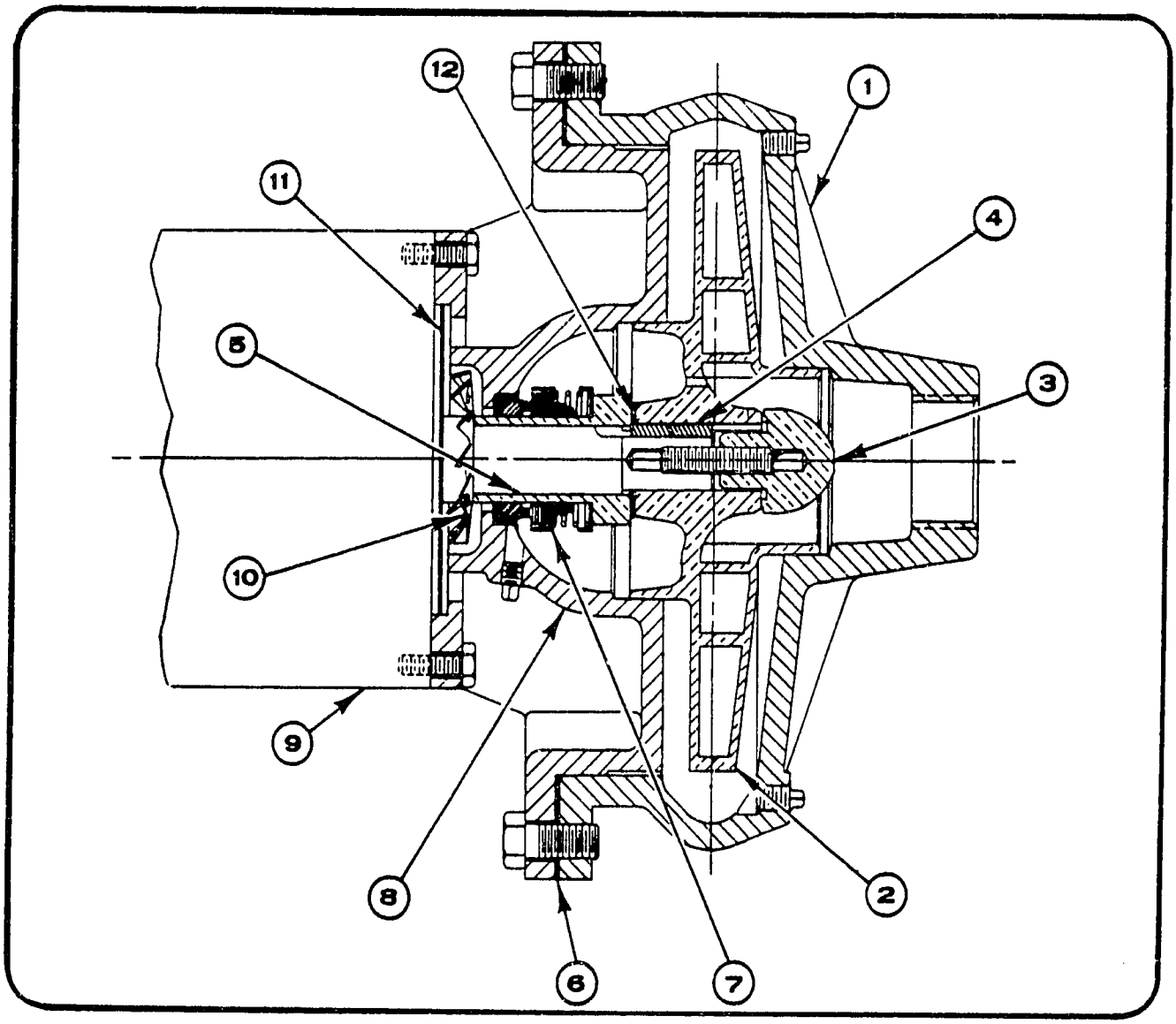

A9 PUMP AND PARTS LIST
SERIES A - 7½ HP

PART NUMBER AND DESCRIPTION	7½ HP 1¼" 3ϕ A9D2A	7½ HP 2" 3ϕ A9D2A	7½ HP 2½" 3ϕ A9D1A	7½ HP 2½" 3ϕ A9D1A
1 CASE (CAST IRON) CASE (BRONZE)	F540 D2-74	F544 D2-80	F545 D2-79	F545 D2-79
2 IMPELLER (BRONZE)	C2-3213X 5 15/16"	C2-3214X 5 9/16"	C2-3215X 9"	C2-3215X 5 5/16"
3 STUD & NUT ASSEMBLY	C10035 A2-3899	C10035 A2-3899	C10035 A2-3899	C10035 A2-3899
4 KEY	C7763	C7763	C7763	C7763
5 SLEEVE *	A2-3905	A2-3905	A2-3905	A2-3905
6 GASKET *	D5450	D5450	D5450	D5450
7 SHAFT SEAL*	3179	3179	3179	3179
8 HEAD (CAST IRON) HEAD (BRONZE)	D2-1478 D2-1480	D2-1478 D2-1480	D2-1481 D2-1483	D2-1478 D2-1480
9 MOTOR	Contact Dunham-Bush, Inc., Marshalltown, Iowa			
10 SLINGER	C1038	C1038	C1038	C1038
11 SHIELD	C8958	C8958	D5478	C8958
12 GASKET *	A2-3020	A2-3020	A2-3020	A2-3020

NOTES:
1. NON-STANDARD pump parts are not shown. When ordering repair parts, refer to page 1 of this catalog.
2. * = These parts are required when replacing shaft seal.

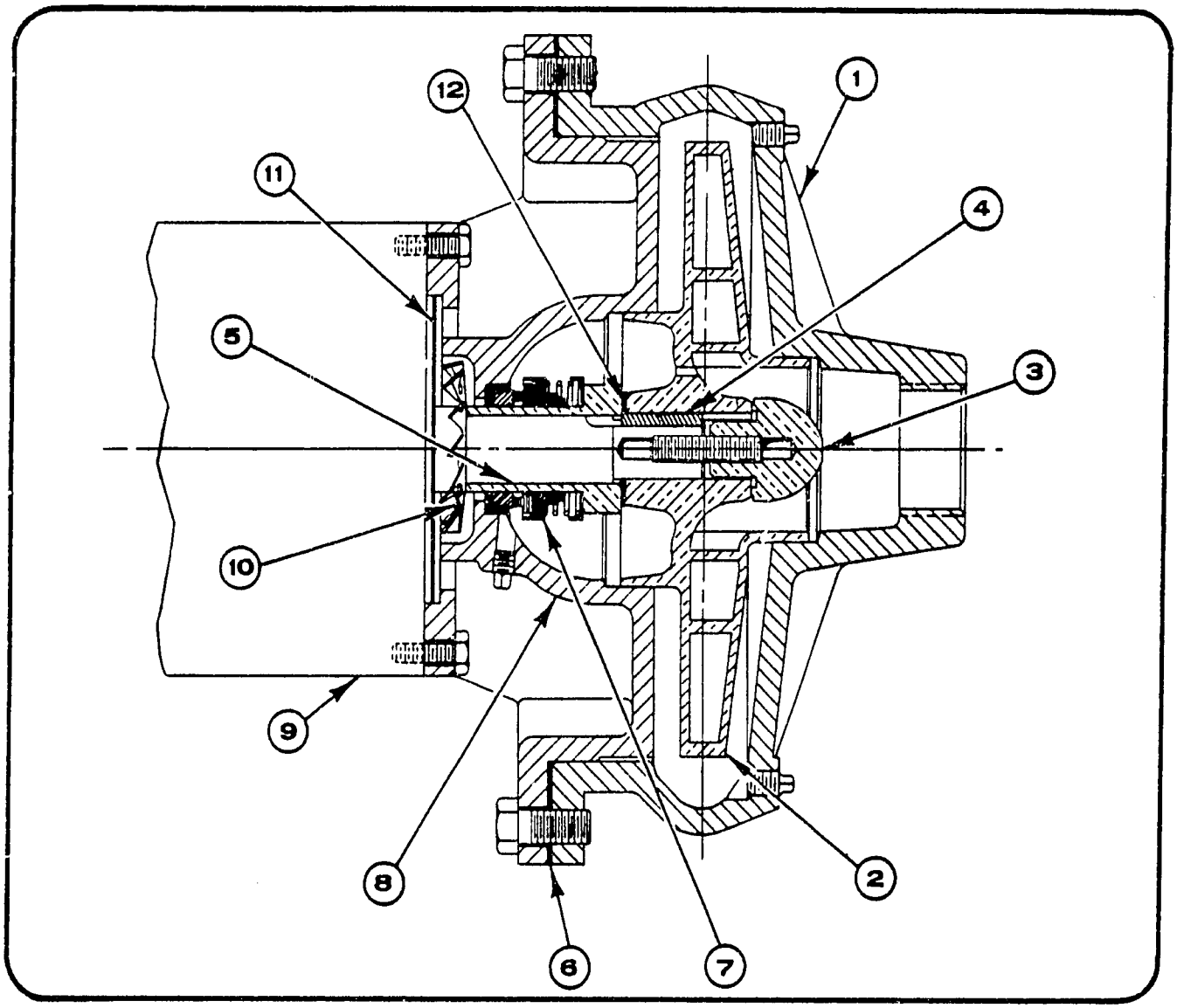

A9 PUMP AND PARTS LIST
SERIES A – 10 HP AND 15 HP

PART NUMBER AND DESCRIPTION	10 HP 1¼" 3ϕ A9D2A	10 HP 2" 3ϕ A9D2A	10 HP 2½" 3ϕ A9D2A	15 HP 2" 3ϕ A9D2A
1 CASE (CAST IRON) CASE (BRONZE)	F540 D2-74	F544 D2-80	F545 D2-79	F544 D2-80
2 IMPELLER (BRONZE)	C2-3213X 6 3/8"	C2-3214X 5 29/32"	C2-3215X 5 21/32"	C2-3214X 6 5/16"
3 STUD & NUT ASSEMBLY	C10035 A2-3899	C10035 A2-3899	C10035 A2-3899	C10035 A2-3899
4 KEY	C7763	C7763	C7763	C7763
5 SLEEVE *	A2-3905	A2-3905	A2-3905	A2-3905
6 GASKET *	D5450	D5450	D5450	D5450
7 SHAFT SEAL *	3179	3179	3179	3179
8 HEAD (CAST IRON) HEAD (BRONZE)	D2-1481 D2-1483	D2-1481 D2-1483	D2-1481 D2-1483	D2-1481 D2-1483
9 MOTOR	Contact Dunham-Bush, Inc., Marshalltown, Iowa			
10 SLINGER	C1038	C1038	C1038	C1038
11 SHIELD	D5478	D5478	D5478	D5478
12 GASKET *	A2-3020	A2-3020	A2-3020	A2-3020

NOTES: 1. NON-STANDARD pump parts are not shown. When ordering repair parts, refer to page 1 of this catalog.
2. * = These parts are required when replacing shaft seal.

823

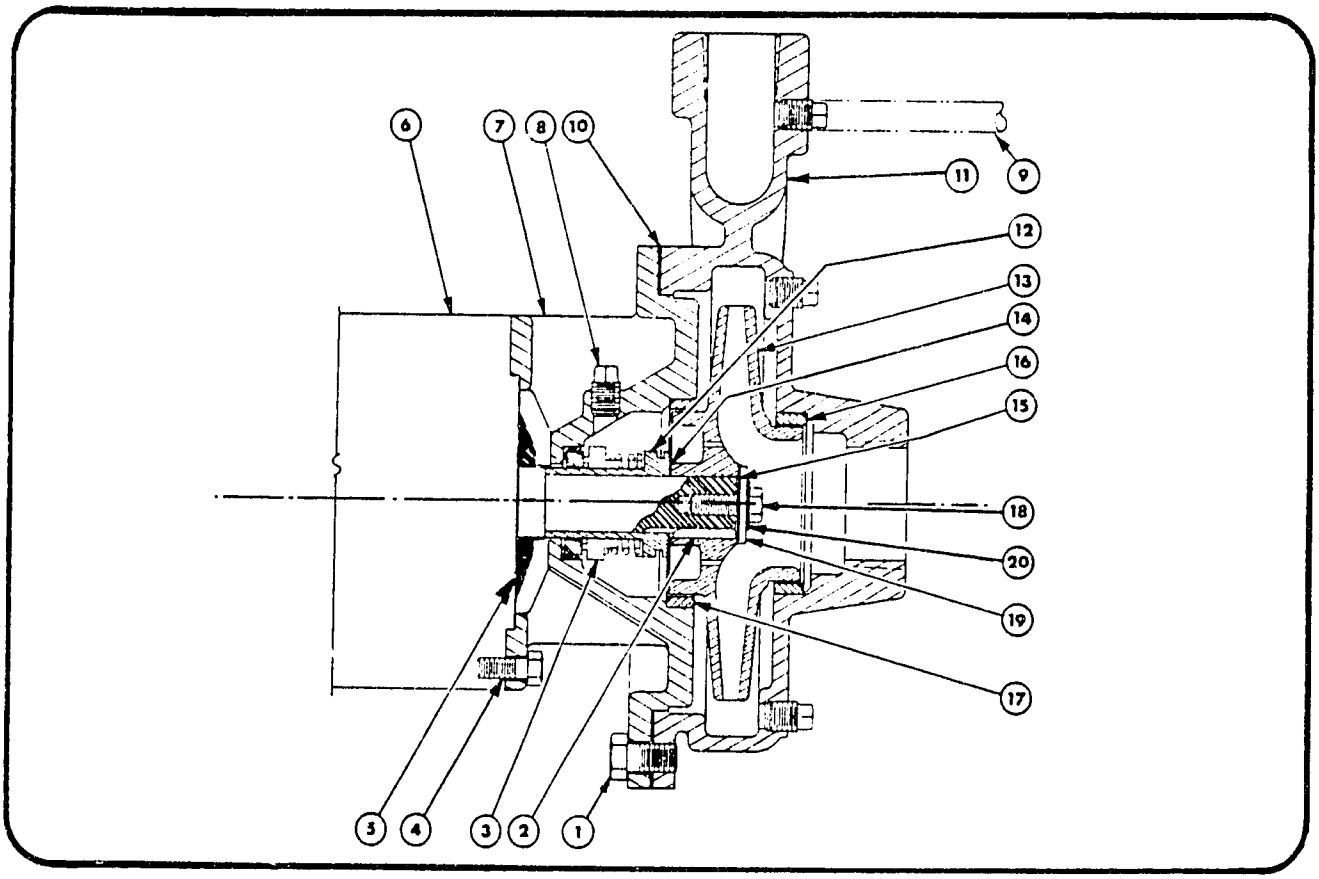

A7 PUMP AND PARTS LIST - ¾", 1¼" AND 1½" DIA. DISCHARGE

PART NUMBER & DESCRIPTION		¾" A7B	1¼" A7B	1¼" A7C	1½" A7B	1½" A7C
1.	Screw – Cap	P - 150				
2.	Key – Impeller	Supplied with Motor				
3.	Seal – Mechanical *	3179	3179	3179	3179	3179
	Seal – 250# Optional	Contact Dunham-Bush, Inc., Marshalltown, Iowa				
4.	Screw – Cap	P-142	P-142	P-150	P-142	P-150
5.	Slinger	Supplied with Motor				
6.	Motor	Contact Dunham-Bush, Inc., Marshalltown, Iowa				
7.	Head, C.I.	C2-2336	C2-2336	C2-2337	C2-2336	C2-2337
	Head, Bronze	C2-2660	C2-2660	C2-2661	C2-2660	C2-2661
	Head, C.I. w/wear Rings	C2-2345	C2-2345	C2-2346	C2-2345	C2-2346
8.	Fitting – Compression Straight	P - 194 (Optional)				
	Fitting – Elbow, Not shown	P - 195 (Optional)				
	Plug – Pipe	(5) P - 196				
9.	Tube	Copper 1/8" OD (Optional)				
10.	Gasket – Case *	C2-2343				
11.	Case, C.I.	C2-2390	C2-2335		C2-2377	
	Case, (Bronze)	C2-2665	C2-2666		C2-2667	
	Case, C.I. w/wear Rings	C2-2389	C2-2347		C2-2376	
	Case, 250# C.I.	Not Available				
	Case, 250# Bronze	Not Available				
	Case, 250# C.I. w/wear Rings	Not Available				
12.	Sleeve *	A2-3018	A2-3018	A2-3018	A2-3018	A2-3018
	Seal – 250# Optional	Contact Dunham-Bush, Inc., Marshalltown, Iowa				
13.	Impeller	C2-2378	C2-2340	C2-2340	C2-2380	C2-2380
14.	Gasket (Impeller – Sleeve) *	A2-3020	A2-3020	A2-3020	A2-3020	A2-3020
15.	Gasket (Impeller – Head) *	A2-3022-1				
16.	Ring – Case Wear Ring	A2-3026	A2-3015		A2-3027	
17.	Ring – Head Wear Ring	A2-3016				
18.	Screw – Impeller	3312	3312	3312	3312	3312
19.	Washer – Impeller	A2-3021-1				
20.	Washer – Sealing	3313	3313	3313	3313	3313

NOTES: 1. NON-STANDARD pump parts are not shown. When ordering repair parts, refer to page 1 of this catalog.
2. * = These parts are required when replacing shaft seal.

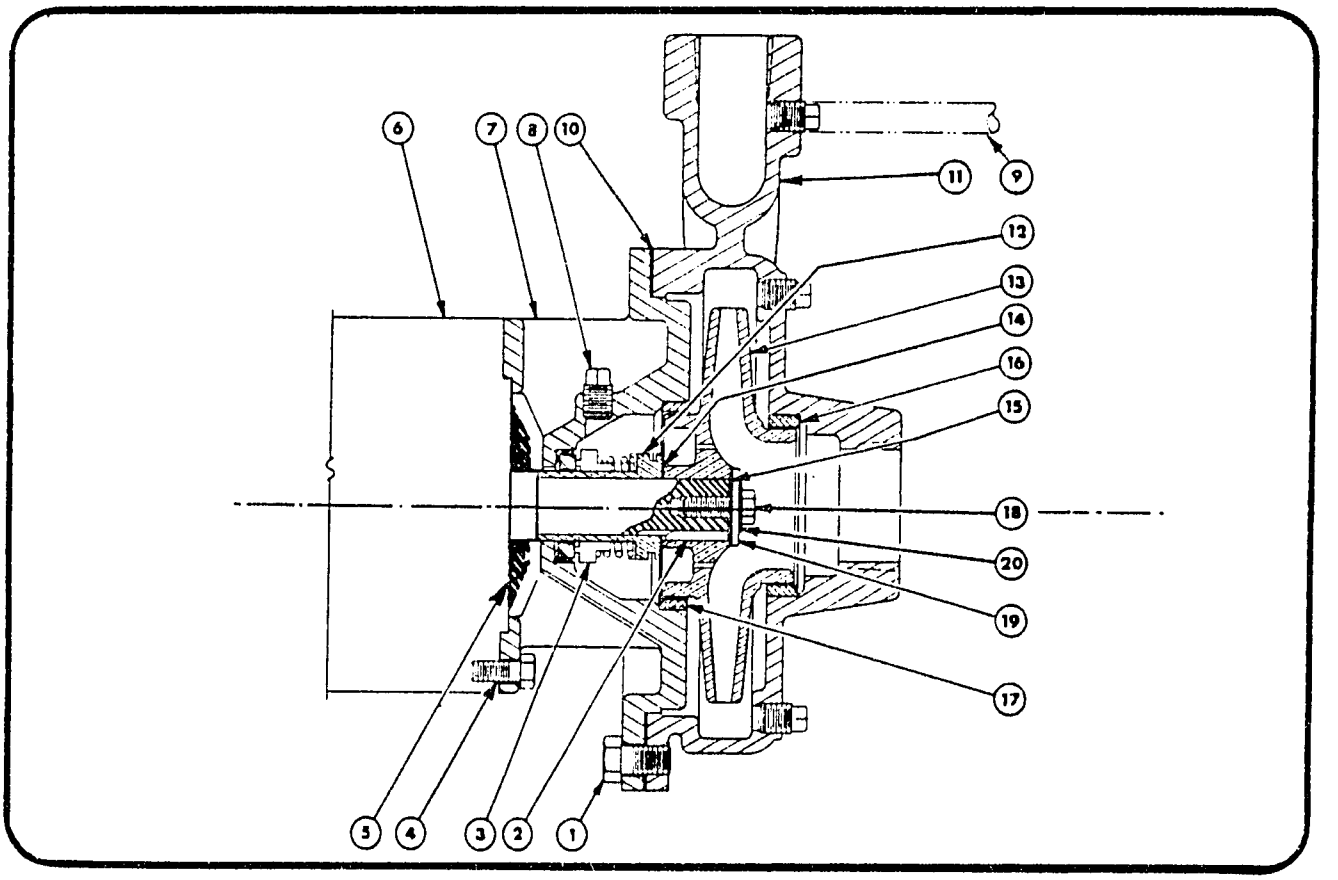

A7 PUMP AND PARTS LIST – 2" AND 2½" DIA. DISCHARGE

PART NUMBER & DESCRIPTION		2" A7D	2" A7E	2" A7F	2½" A7D	2½" A7E	2½" A7E H.C.	2½" A7F
1.	Screw – Cap	P - 150						
2.	Key – Impeller	Supplied with Motor						
3.	Seal – Mechanical *	3179	3179	3291	3179	3179	3179	3291
	Seal – 250# Optional	Contact Dunham-Bush, Inc., Marshalltown, Iowa						
4.	Screw – Cap	P - 142	P - 150	P - 150	P - 142	P - 150	P - 150	P - 150
5.	Slinger	Supplied with Motor						
6.	Motor	Contact Dunham-Bush, Inc., Marshalltown, Iowa						
7.	Head, C.I.	C2-2384	C2-2386	C2-2388	C2-2384	C2-2386	C2-2386	C2-2388
	Head, Bronze	C2-2662	C2-2663	C2-2664	C2-2662	C2-2663	C2-2663	C2-2664
	Head, C.I. w/wear rings	C2-2383	C2-2385	C2-2387	C2-2383	C2-2385	C2-2385	C2-2387
8.	Fitting – Compression Straight	P - 194 (Optional)						
	Fitting – Elbow, Not shown	P - 195 (Optional)						
	Plug – Pipe	(5) P - 196						
9.	Tube	Copper 1/8" OD (Optional)						
10.	Gasket – Case *	C2-2343						
11.	Case, C.I.	D2-1274			D2-1276			
	Case, (Bronze)	D2-1352			D2-1355			
	Case, C.I. w/wear rings	D2-1273			D2-1275			
	Case, 250# C.I.	Not Available						
	Case, 250# Bronze	Not Available						
	Case, 250# C.I. w/wear rings	Not Available						
12.	Sleeve *	A2-3018	A2-3018	A2-3025	A2-3018	A2-3018	A2-3018	A2-3025
	Seal – 250# Optional	Contact Dunham-Bush, Inc., Marshalltown, Iowa						
13.	Impeller	C2-2381	C2-2381	C2-2382	C2-2381	C2-2381	C2-2392	C2-2382
14.	Gasket (Impeller – Sleeve) *	A2-3020	A2-3020	A2-3029	A2-3020	A2-3020	A2-3020	A2-3029
15.	Gasket (Impeller – Head) *	A2-3021-1		A2-3022-2	A2-3022-1			A2-3022-2
16.	Ring – Case Wear Ring	A2-3028						
17.	Ring – Head Wear Ring	A2-3016						
18.	Screw – Impeller	3312	3312	3292	3312	3312	3312	3292
19.	Washer – Impeller	A2-3021-1		A2-3021-2	A2-3021-1			A2-3021-2
20.	Washer – Sealing	3313	3313	3293	3313	3313	3313	3293

NOTES: 1. NON-STANDARD pump parts are not shown. When ordering repair parts, refer to page 1 of this catalog.
2. * = These parts are required when replacing shaft seal.

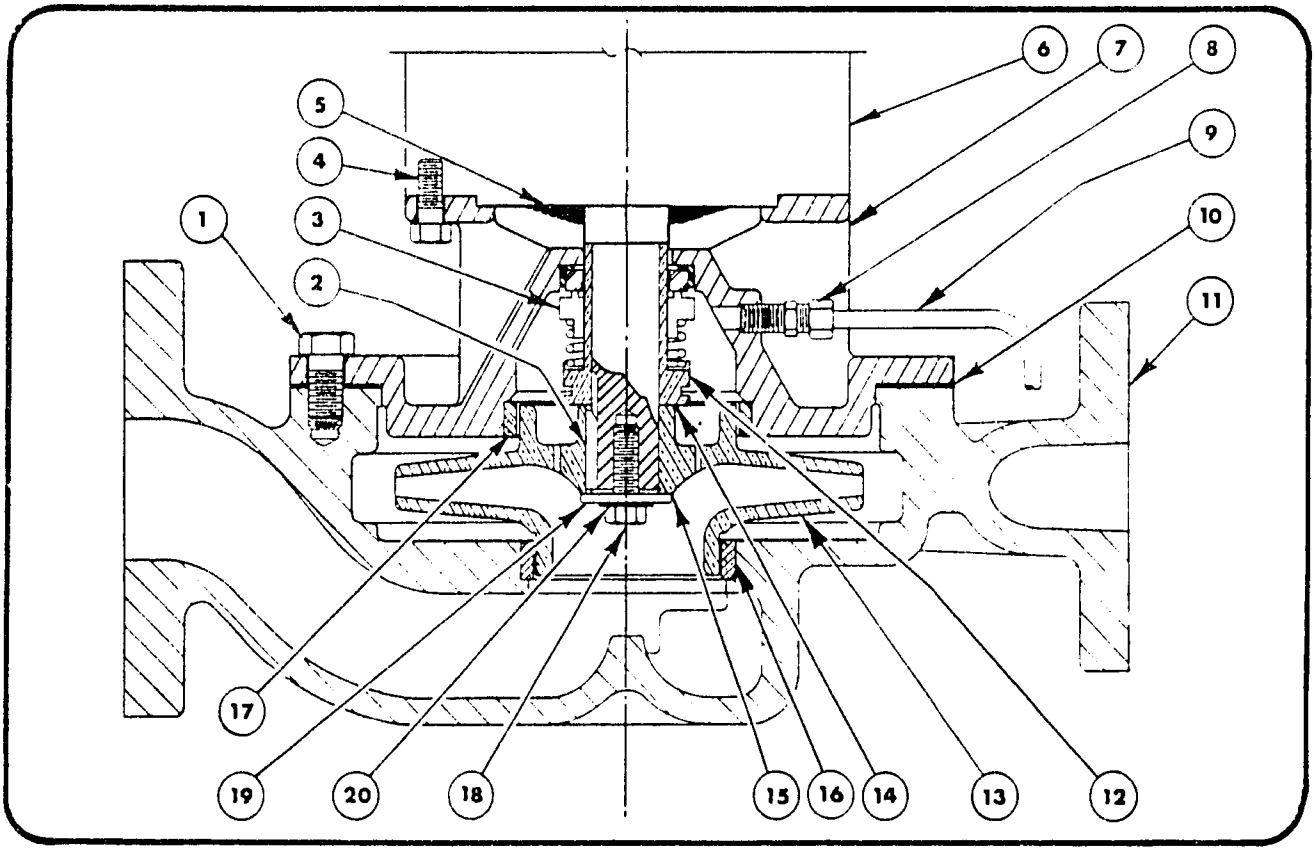

PM7 PUMP AND PARTS LIST – 1", 1¼" AND 1½" DIA. DISCHARGE

PART NUMBER & DESCRIPTION		1" PM7B	1¼" PM7B	1¼" PM7C	1½" PM7B	1½" PM7C
1.	Screw - Cap	P - 150				
2.	Key - Impeller	Supplied with Motor				
3.	Seal - Mechanical *	3179	3179	3179	3179	3179
	Seal 250# Optional	Contact Dunham-Bush, Inc. – Marshalltown, Iowa				
4.	Screw - Cap	P - 142	P - 142	P - 150	P - 142	P - 150
5.	Slinger	Supplied with Motor				
6.	Motor	Contact Dunham-Bush, Inc. – Marshalltown, Iowa				
7.	Head, C.I.	C2-2336	C2-2336	C2-2337	C2-2336	C2-2337
	Head, (Bronze)	C2-2660	C2-2660	C2-2661	C2-2660	C2-2661
	Head, C.I. w/wear rings	C2-2345	C2-2345	C2-2346	C2-2345	C2-2346
8.	Fitting - Compression Straight	P-194				
	Fitting - Elbow – Not shown	P-195				
	Plug - Pipe	(1) P-196				
9.	Tube	Copper 1/8" OD				
10.	Gasket - Case *	C2-2343				
11.	Case, C.I.	D2-1268	D2-1256	D2-1256	D2-1266	D2-1266
	Case, (Bronze)	D2-1346	D2-1348	D2-1348	D2-1350	D2-1350
	Case, C.I. w/wear rings	D2-1267	D2-1255	D2-1255	D2-1265	D2-1265
	Case, 250# C.I.	D2-1299	D2-1301	D2-1301	D2-1303	D2-1303
	Case, 250# Bronze	D2-1347	D2-1349	D2-1349	D2-1351	D2-1351
	Case, 250# C.I. w/wear rings	D2-1300	D2-1302	D2-1302	D2-1304	D2-1304
12.	Sleeve *	A2-3018	A2-3018	A2-3018	A2-3018	A2-3018
	Seal 250# Optional	Contact Dunham-Bush, Inc. – Marshalltown, Iowa				
13.	Impeller	C2-2379	C2-2340	C2-2340	C2-2380	C2-2380
14.	Gasket (Impeller - Sleeve) *	A2-3020	A2-3020	A2-3020	A2-3020	A2-3020
15.	Gasket (Impeller - Head) *	A2-3022-1				
16.	Ring - Case Wear Ring	A2-3026	A2-3015	A2-3015	A2-3027	A2-3027
17.	Ring - Head Wear Ring	A2-3016				
18.	Screw - Impeller	3312				
19.	Washer - Impeller	A2-3021-1				
20.	Washer - Sealing	3313				

NOTES: 1. NON-STANDARD pump parts are not shown. When ordering repair parts, refer to page 1 of this catalog.
2. * = These parts are required when replacing shaft seal.

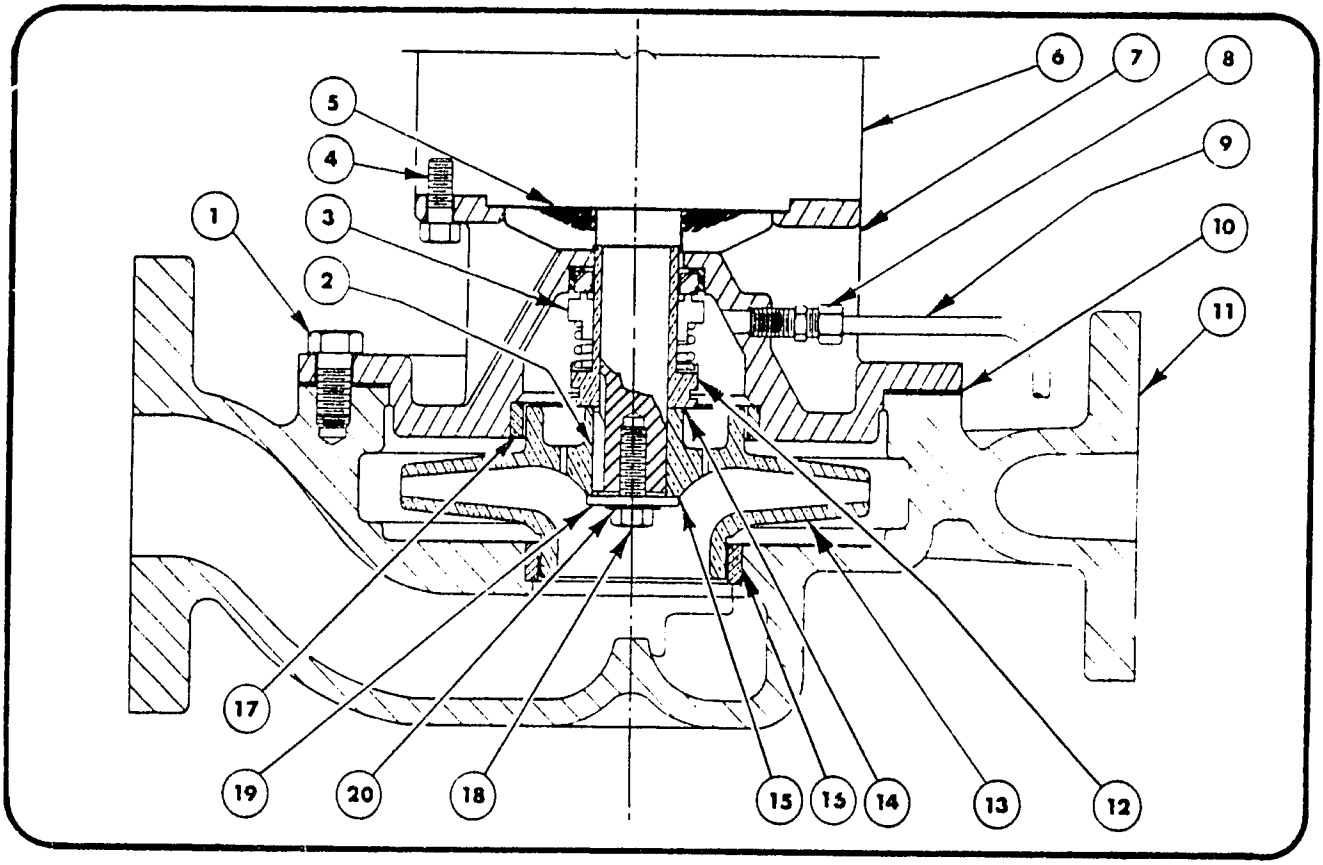

PM7 PUMP AND PARTS LIST – 2" AND 2½" DIA. DISCHARGE

PART NUMBER & DESCRIPTION		2" PM7D	2" PM7E	2" PM7F	2½" PM7D	2½" PM7E	2½" PM7E H.C.	2½" PM7F
1.	Screw - Cap	P - 150						
2.	Key - Impeller	Supplied with Motor						
3.	Seal - Mechanical *	3179	3179	3291	3179	3179	3179	3291
	Seal 250# Optional	Contact Dunham-Bush, Inc. – Marshalltown, Iowa						
4.	Screw - Cap	P - 142	P - 150	P - 150	P - 142	P -150	P - 150	P -150
5.	Slinger	Supplied with Motor						
6.	Motor	Contact Dunham-Bush, Inc. – Marshalltown, Iowa						
7.	Head, C.I.	C2-2384	C2-2386	C2-2388	C2-2384	C2-2386	C2-2386	C2-2388
	Head, (Bronze)	C2-2662	C2-2663	C2-2664	C2-2662	C2-2663	C2-2663	C2-2664
	Head, C.I. w/wear rings	C2-2383	C2-2385	C2-2387	C2-2383	C2-2385	C2-2385	C2-2387
8.	Fitting - Compression Straight	P-194						
	Fitting - Elbow – Not Shown	P-195						
	Plug - Pipe	(1) P-196						
9.	Tube	Copper 1/8" OD						
10.	Gasket - Case *	C2-2343						
11.	Case, C.I.	D2-1270			D2-1272			
	Case, (Bronze)	D2-1269			D2-1356			
	Case, C.I. w/wear rings	D2-1353			D2-1271			
	Case, 250# C.I.	D2-1305			D2-1307			
	Case, 250# Bronze	D2-1354			D2-1357			
	Case, 250# C.I. w/wear rings	D2-1306			D2-1308			
12.	Sleeve *	A2-3018	A2-3018	A2-3025	A2-3018	A2-3018	A2-3018	A2-3025
	Seal 250# Optional	Contact Dunham-Bush, Inc. – Marshalltown, Iowa						
13.	Impeller	C2-2381	C2-2381	C2-2382	C2-2381	C2-2381	C2-2392	C2-2382
14.	Gasket (Impeller - Sleeve) *	A2-3020	A2-3020	A2-3029	A2-3020	A2-3020	A2-3020	A2-3029
15.	Gasket (Impeller - Head)	A2-3022-1		A2-3022-2	A2-3022-1			A2-3022-2
16.	Ring - Case Wear Ring	A2-3028						
17.	Ring - Head Wear Ring	A2-3016						
18.	Screw - Impeller	3312		3292	3312			3292
19.	Washer - Impeller	A2-3021-1		A2-3021-2	A2-3021-1			A2-3021-2
20.	Washer - Sealing	3313		3293	3313			3293

NOTES: 1. NON-STANDARD pump parts are not shown. When ordering repair parts, refer to page 1 of this catalog.
2. * = These parts are required when replacing shaft seal.

427

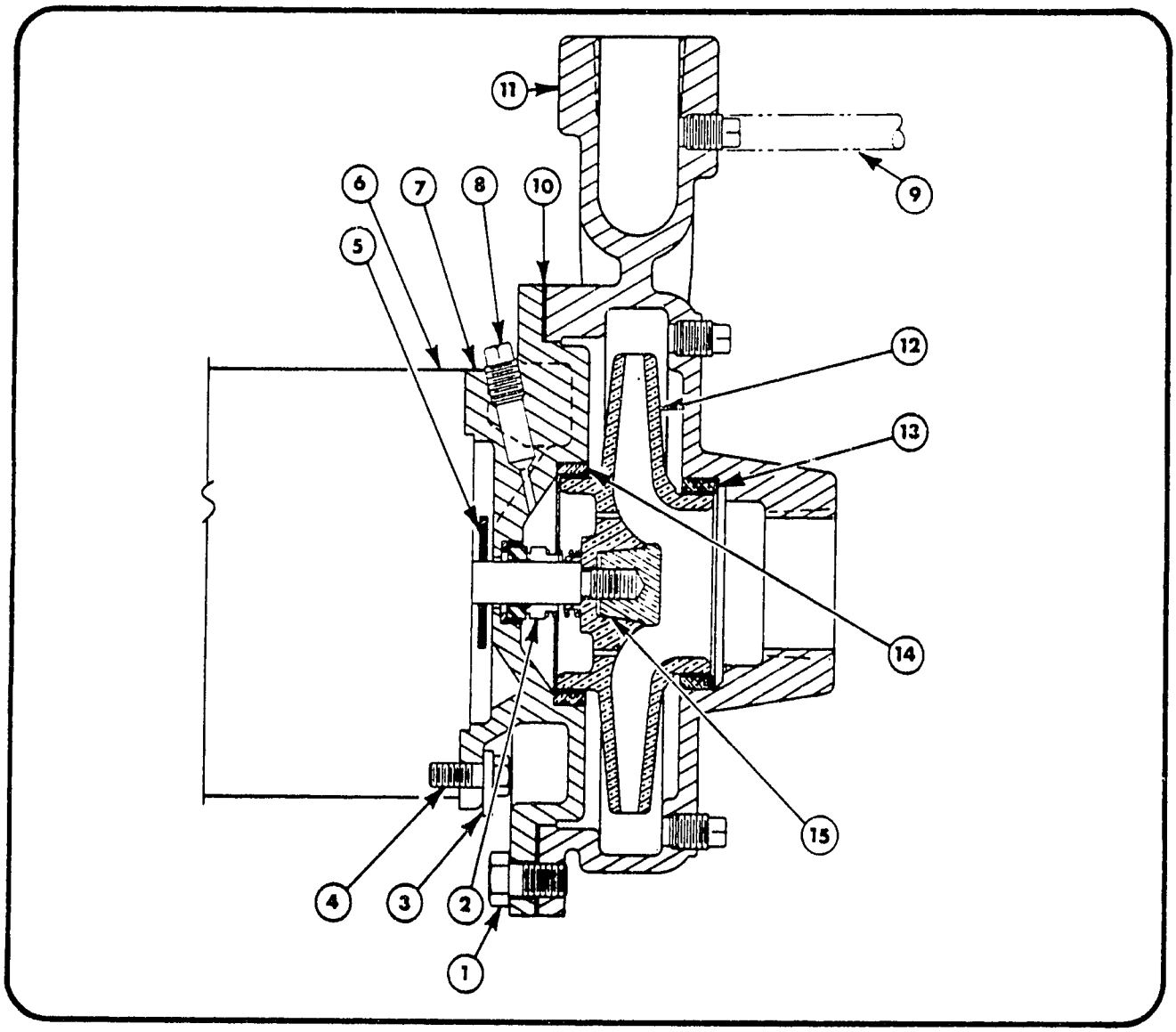

A7A PUMP AND PARTS LIST – ¾", 1¼" AND 1½" DIA. DISCHARGE

	PART NUMBER & DESCRIPTION	¾" A7A	1¼" A7A	1½" A7A
1.	Screw–Cap	P - 150	P - 150	P - 150
2.	Seal–Mechanical *	472	472	472
3.	Retainer–Head	A2-3023	A2-3023	A2-3023
4.	Screw–Cap	P - 142	P - 142	P - 142
5.	Slinger	C8854	C8854	C8854
6.	Motor	Contact Dunham-Bush, Inc. Marshalltown, Iowa		
7.	Head, C.I.	C2-2342	C2-2342	C2-2342
	Head, Bronze	C2-2659	C2-2659	C2-2659
	Head, C.I. w/wear rings	C2-2344	C2-2344	C2-2344
8.	Fitting – Compression Straight	P - 194 (Optional)		
	Fitting – Elbow (Not Shown)	P - 195 (Optional)		
	Plug–Pipe	(5) P - 196		
9.	Tube	Copper 1/8" OD (Optional)		
10.	Gasket–Case *	C2-2343	C2-2343	C2-2343
11.	Case, C.I.	C2-2390	C2-2335	C2-2377
	Case, Bronze	C2-2665	C2-2666	C2-2667
	Case, C.I. w/wear rings	C2-2389	C2-2347	C2-2376
12.	Impeller	C2-2378	C2-2339	C2-2498
13.	Ring – Case Wear Ring	A2-3026	A2-3015	A2-3027
14.	Ring – Head Wear Ring	A2-3016	A2-3016	A2-3016
15.	Screw–Impeller	A2-3691	A2-3691	A2-3691

NOTES:
1. NON-STANDARD pump parts are not shown. When ordering repair parts, refer to page 1 of this catalog.
2. * = These parts are required when replacing shaft seal.

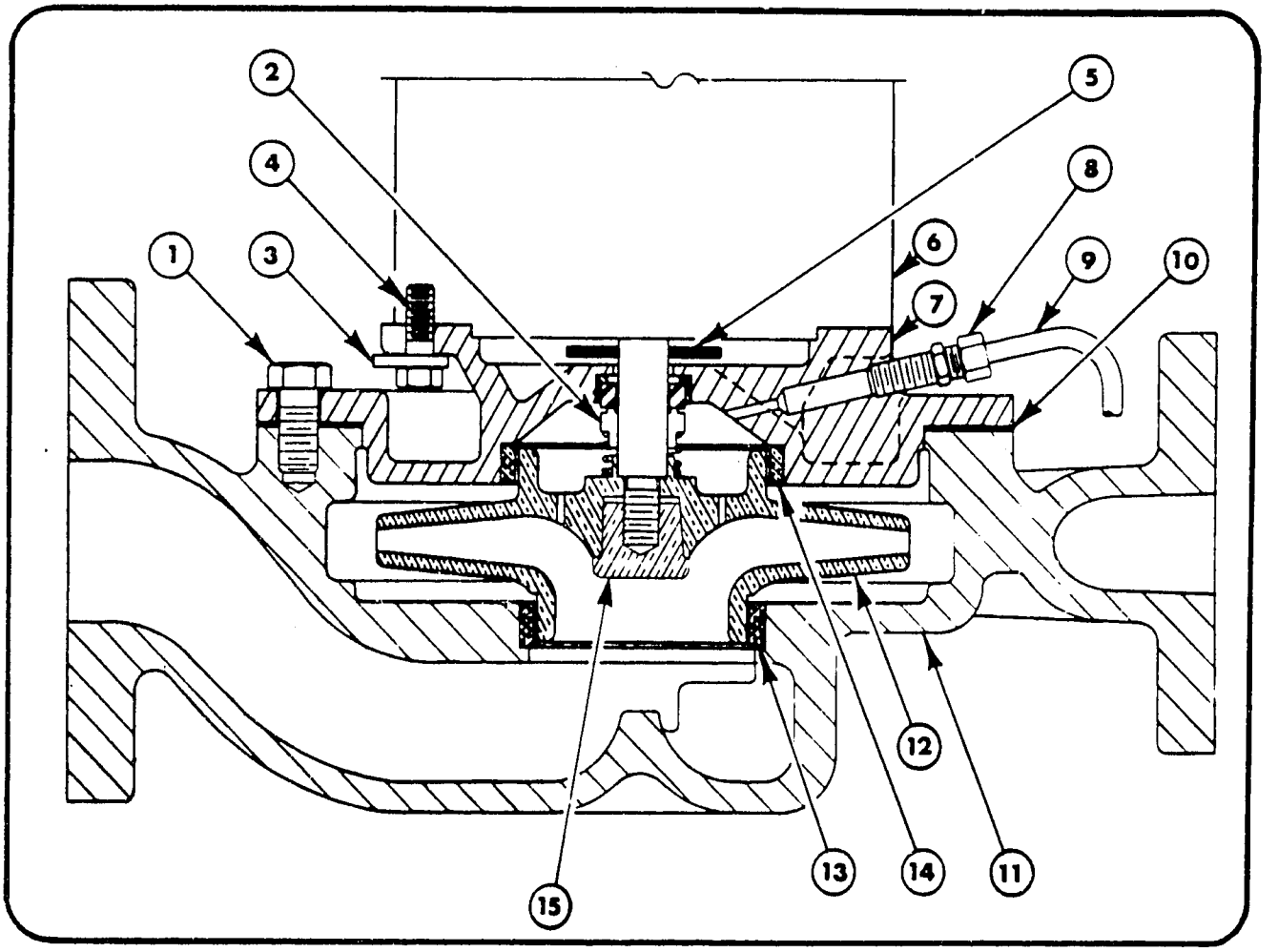

PM7A PUMP AND PARTS LIST
1", 1¼" AND 1½" DIA. DISCHARGE

PART NUMBER & DESCRIPTION		1" PM7A	1¼" PM7A	1½" PM7A
1.	Screw—Cap	P - 150	P - 150	P - 150
2.	Seal—Mechanical *	472	472	472
3.	Retainer—Head	A2-3023	A2-3023	A2-3023
4.	Screw—Cap	P - 142	P - 142	P - 142
5.	Slinger	C8854	C8854	C8854
6.	Motor	Contact Dunham-Bush, Inc., Marshalltown, Iowa		
7.	Head, C.I.	C2-2342	C2-2342	C2-2342
	Head, Bronze	C2-2659	C2-2659	C2-2659
	Head, C.I. w/wear rings	C2-2344	C2-2344	C2-2344
8.	Fitting—Compression Straight	P - 194		
	Fitting—Elbow (Not Shown)	P - 195		
	Plug—Pipe	(1) P - 196		
9.	Tube	Copper 1/8" OD		
10.	Gasket—Case *	C2-2343	C2-2343	C2-2343
11.	Case, C.I.	D2-1268	D2-1256	D2-1266
	Case, Bronze	D2-1346	D2-1348	D2-1350
	Case, C.I. w/wear rings	D2-1267	D2-1255	D2-1265
	Case, 250# C.I.	D2-1299	D2-1301	D2-1303
	Case, 250# Bronze	D2-1347	D2-1349	D2-1351
	Case, 250# C.I. w/wear rings	D2-1300	D2-1302	D2-1304
12.	Impeller	C2-2378	C2-2339	C2-2498
13.	Ring—Case Wear Ring	A2-3026	A2-3015	A2-3027
14.	Ring—Head Wear Ring	A2-3016	A2-3016	A2-3016
15.	Nut—Impeller	A2-3691	A2-3691	A2-3691

NOTES: 1. NON-STANDARD pump parts are not shown. When ordering repair parts, refer to page 1 of this catalog.
2. * = These parts are required when replacing shaft seal.

DUNHAM-BUSH

AIR CONDITIONING, REFRIGERATION, HEATING PRODUCTS AND ACCESSORIES

MAIN OFFICES AND FACTORIES

MAIN OFFICES
175 South Street
West Hartford, Connecticut
06110

WEST HARTFORD DIVISION
179 South Street
West Hartford, Connecticut
06110

HARRISONBURG DIVISION
101 Burgess Road
Harrisonburg, Virginia
22801

MARSHALLTOWN DIVISION
811 East Main Street
Marshalltown, Iowa
50158

SUBSIDIARIES

DUNHAM-BUSH of Canada Limited
140 Wendell Avenue
Weston, Ontario

DUNHAM-BUSH, LTD.
Fitzherbert Road, Farlington
Portsmouth, Hampshire, England

DUNHAM-BUSH INTERNATIONAL: 175 South Street, West Hartford, Connecticut 06110, U.S.A.
CABLE: DUNBUSH or TELEX: 994469

SALES OFFICES

ALABAMA
Birmingham
Mobile

ARIZONA
Phoenix

ARKANSAS
Little Rock

CALIFORNIA
Arcadia
Los Angeles
San Diego
San Francisco

COLORADO
Denver

CONNECTICUT
Hartford
New Haven

FLORIDA
Jacksonville
Miami
Orlando
Tampa

GEORGIA
Atlanta

HAWAII
Honolulu

ILLINOIS
Chicago
Peoria
Rockford

INDIANA
Indianapolis
Michigan City

IOWA
DesMoines

KANSAS
Lenexa

KENTUCKY
Louisville

LOUISIANA
New Orleans
Shreveport

MAINE
Lewiston

MARYLAND
Baltimore
Silver Spring

MASSACHUSETTS
Boston
Springfield

MICHIGAN
Detroit
Grand Rapids
Kalamazoo

MINNESOTA
Minneapolis

MISSISSIPPI
Jackson

MISSOURI
Kansas City
St. Louis

MONTANA
Billings
Great Falls

NEBRASKA
Omaha

NEW JERSEY
Little Falls
South Amboy
Union

NEW MEXICO
Albuquerque

NEW YORK
Albany
Buffalo
New York City
Rochester
Syracuse

NORTH CAROLINA
Charlotte
Greensboro

OHIO
Akron
Cincinnati
Cleveland
Columbus
Dayton
Delaware
Toledo

OKLAHOMA
Oklahoma City
Tulsa

OREGON
Portland

PENNSYLVANIA
Harrisburg
Philadelphia

PENNSYLVANIA (Cond't)
Pittsburgh
Pittston

RHODE ISLAND
Providence

SOUTH CAROLINA
Columbia
Greenville

TENNESSEE
Chattanooga
Memphis
Knoxville
Nashville

TEXAS
Austin
Corpus Christie
Dallas
Fort Worth
El Paso
Houston
Lubbock
San Antonio

UTAH
Salt Lake City

VIRGINIA
Alexandria
Richmond

WASHINGTON
Seattle
Spokane

WEST VIRGINIA
Barboursville

WISCONSIN
Milwaukee

DUNHAM-BUSH, INC. • West Hartford, Connecticut 06110, U.S.A.

2505B-7.5M-567A-11778

one of The Signal Companies

Exhibit 1-6

FORM NO. 17448P
EFFECTIVE
MARCH 1981
SUPERSEDES 17448N

DUNHAM-BUSH

A5, A7, PM7 and A9 CENTRIFUGAL PUMP REPAIR PARTS LIST PRICES

PRICES AND SPECIFICATIONS SUBJECT TO CHANGE WITHOUT NOTICE.
FOR TERMS OF SALE REFER TO LATEST REVISION OF FORM 1278

REFER TO FORM 2505 FOR DESCRIPTION OF PARTS AND NUMBERS

PART NUMBER	LIST PRICE
472	$ 25.05
860	63.10
861	73.40
1112	.70
3179	80.20
3199	103.00
3291	148.00
3292	2.30
3293	2.35
3312	2.30
3313	1.75
A2-51	73.40
A2-672	43.45
A2-3015	45.90
A2-3016	45.90
A2-3018	24.10
A2-3020	1.20
A2-3021-1	5.60
A2-3021-2	16.85
A2-3022-1	1.20
A2-3022-2	5.85
A2-3023	1.20
A2-3025	57.20
A2-3026	45.90
A2-3027	45.90
A2-3028	45.90
A2-3029	5.90
A2-3379	5.45
A2-3691	12.10
A2-3898	32.90
A2-3905	73.90
C2-73 x 6-1/16	276.00
C2-73 x 6-9/16	276.00
C2-73 x 6-3/4	276.00
C2-73 x 7-5/16	276.00
C2-73 x 8-7/16	276.00
C2-73 x 9	276.00
C2-2335	218.00
C2-2336	172.00
C2-2337	183.00
C2-2339	310.00
C2-2340	264.00
C2-2342	91.65
C2-2343	4.45

PART NUMBER	LIST PRICE
C2-2344	$264.00
C2-2345	310.00
C2-2346	344.00
C2-2347	344.00
C2-2376	495.00
C2-2377	286.00
C2-2378	240.00
C2-2379	255.00
C2-2380	276.00
C2-2381	293.00
C2-2382	293.00
C2-2383	428.00
C2-2384	179.00
C2-2385	436.00
C2-2386	160.00
C2-2387	436.00
C2-2388	160.00
C2-2389	323.00
C2-2390	268.00
C2-2392	339.00
C2-2498	311.00
C2-2659	499.00
C2-2660	504.00
C2-2661	538.00
C2-2662	550.00
C2-2663	550.00
C2-2664	563.00
C2-2665	142.00
C2-2666	756.00
C2-2667	779.00
C-7763	1.50
C8709	1.20
C8854	2.55
C8930	9.20
C8938	7.35
C8958	12.90
C10025	12.20
C10035	3.00
C10037	15.15
C10038	15.15
C10060	15.15
C10061	15.15

PART NUMBER	LIST PRICE
C10062	$ 10.80
C10063	10.80
C10063SS	40.70
D2-74	765.00
D2-76	797.00
D2-77	550.00
D2-78	611.00
D2-79	918.00
D2-80	918.00
D2-1255	424.00
D2-1256	300.00
D2-1265	469.00
D2-1266	368.00
D2-1267	469.00
D2-1268	310.00
D2-1269	469.00
D2-1270	355.00
D2-1271	687.00
D2-1272	344.00
D2-1273	687.00
D2-1274	332.00
D2-1275	883.00
D2-1276	412.00
D221299	310.00
D2-1300	469.00
D2-1301	300.00
D2-1302	469.00
D2-1303	368.00
D2-1304	469.00
D2-1305	412.00
D2-1306	687.00
D2-1307	412.00
D2-1308	1,833.00
D2-1346	861.00
D2-1347	1,148.00
D2-1348	1,148.00
D2-1349	1,148.00
D2-1350	1,261.00
D2-1351	1,261.00
D2-1352	1,147.00
D2-1353	1,147.00

PART NUMBER	LIST PRICE
D2-1354	$1,147.00
D2-1355	1,147.00
D2-1356	1,147.00
D2-1357	1,147.00
D5193 x 4-5/16	91.65
D5193 x 4-9/16	91.65
D5193 x 5	91.65
D5195 x 4-1/2	91.65
D5197 x 3-5/16	91.65
D5197 x 4-5/16	91.65
D5199 x 4-1/8	91.65
D5199 x 4-1/4	91.65
D5202 x 4-1/8	91.65
D5203 x 3 1/8	91.65
D5203 x 3-1/2	91.65
D5203 x 3-7/8	91.65
D5203 x 4-3/16	91.65
D5352	2.85
D5450	6.60
D5478	15.15
E6041	79.35
E6042	61.10
E6046 x 1-1/2	79.35
E6047 x 2	79.35

PART NUMBER	LIST PRICE
E6048	$ 79.35
E6077	134.00
E6078	159.00
E6079	153.00
E6080	185.00
E6081	122.00
E6141 x 5-1/4	257.00
E6141 x 5-7/8	257.00
E6181 x 4-7/16	257.00
E6181 x 4-15/16	257.00
E6181 x 5-15/16	257.00
E6181 x 5-15/32	257.00
E6181 x 6-3/8	257.00
E6181 x 7-3/16	276.00
E6181 x 8-1/4	276.00
E6184 x 3-15/16	257.00
E6184 x 4-1/4	257.00
E6188 x 4-15/16	257.00
E6188 x 5-3/8	257.00
E6188 x 5-9/16	257.00
E6188 x 5-29/32	257.00
E6188 x 6-1/2	257.00
E6188 x 6-5/16	257.00
E6188 x 7-1/16	276.00

PART NUMBER	LIST PRICE
E6188 x 8-7/16	$ 276.00
E6204 x 4-3/4	257.00
E6204 x 5-5/16	257.00
E6204 x 5-21/32	257.00
E6204 x 6-1/8	257.00
E6204 x 6-3/4	257.00
E6204 x 7-15/16	276.00
E6204 x 9	276.00
F539	91.65
F540	137.00
F541	122.00
F544	146.00
F545	153.00
F546	107.00
P2	1.15
P6	1.15
P116	2.30
P142	4.10
P150	1.20
P189	4.10
P190	4.55
P192	1.20
P193	1.75
P194	.75
P195	1.25
P196	1.10
1/8" OD Copper Tube	.60

C2-3211 x 6 1/16"	$ 276.00
C2-3211 x 6 9/16"	276.00
C2-3211 x 6 3/4	276.00
C2-3211 x 7 15/16"	276.00
C2-3211 x 8 7/16"	276.00
C2-3211 x 9"	276.00
C2-3212 x 5 1/4 "	257.00
C2-3212 x 5 7/8"	257.00
C2-3212 x 6 1/16"	257.00
C2-3213 x 4 7/16"	257.00
C2-3213 x 4 15/16	257.00
C2-3213 x 5 15/32"	257.00
C2-3213 x 5 9/16"	257.00
C2-3213 x 5 15/16"	257.00
C2-3213 x 6 3/8"	257.00

C2-3213 x 7 3/16"	$276.00
C2-3213 x 8 1/4 "	276.00
C2-3214 x 4 15/16"	257.00
C2-3214 x 5 3/8 "	257.00
C2-3214 x 5 29/32"	257.00
C2-3214 x 6 5/16"	257.00
C2-3214 x 6 1/2 "	257.00
C2-3214 x 7 1/16"	276.00
C2-3214 x 8 7/16 "	276.00
C2-3215 x 4 3/4 "	257.00

C2-3215 x 5 5/16"	$ 257.00
C2-3215 x 5 21/32"	257.00
C2-3215 x 6 1/8"	257.00
C2-3215 x 7 15/16"	276.00
C2-3215 x 9"	276.00
D2-1478	171.00
D2-1479	458.00
D2-1480	526.00
D2-1481	236.00
D2-1482	596.00
D2-1483	1,078.00

Exhibit F-7

FORM NO. 3440B

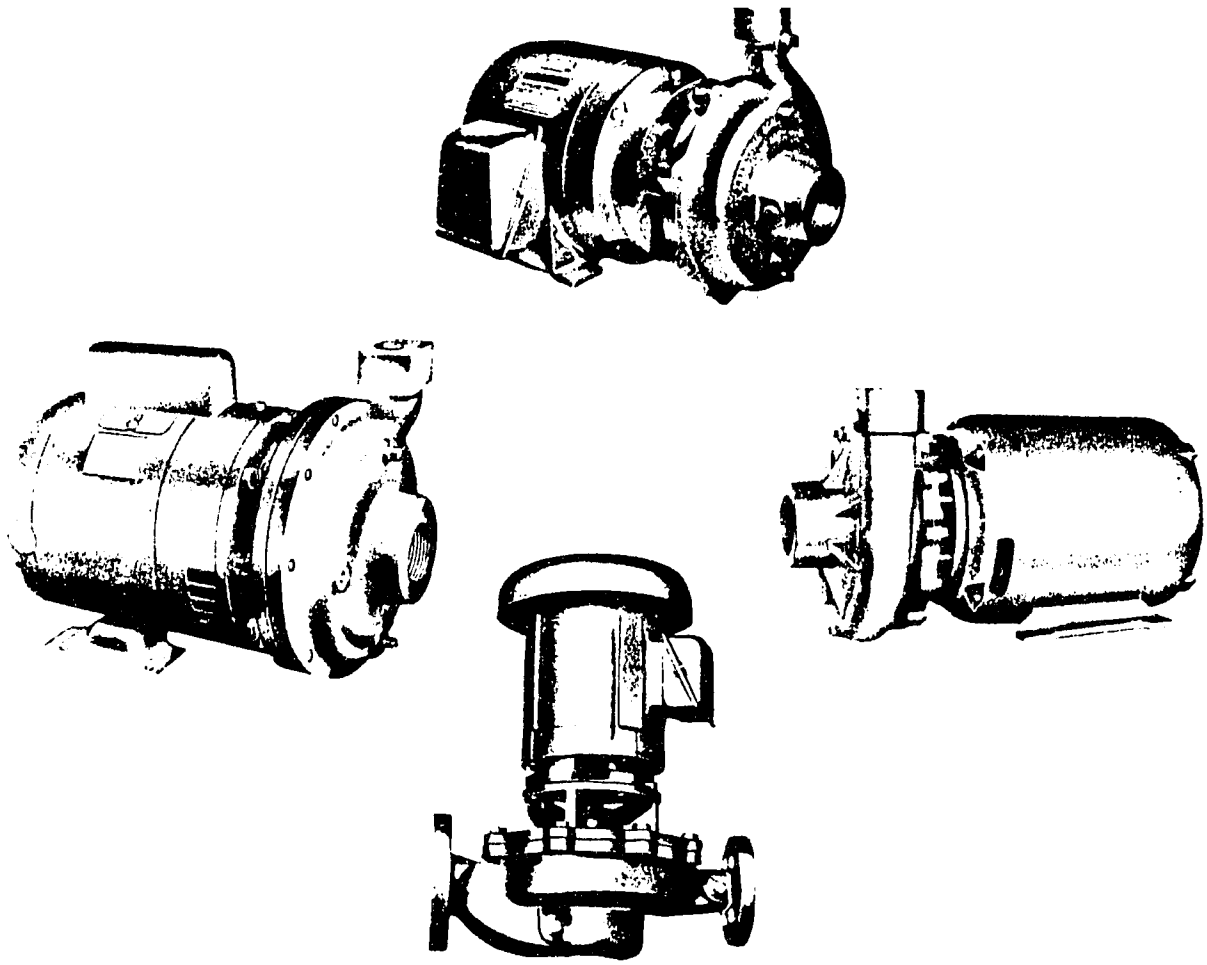

DUNHAM-BUSH

CENTRIFUGAL PUMPS
TYPE A5, A7, A9 AND PM7

Installation, Operation and Maintenance Instructions

833

CENTRIFUGAL PUMPS
TYPE A5, A7, A9 AND PM7

INDEX

DESCRIPTION	PAGE
INTRODUCTION	1
SECTION I INSTALLATION	
LOCATION	1
FOUNDATION	1
MOUNTING	1
PIPING	1
SUCTION PIPING	1
DISCHARGE, PIPING	2
PIPING FOR SPARE PUMPS	2
INSTALLING PUMP	2
SECTION II OPERATION	
PUMP STARTING	2 - 3
OPERATING AT REDUCED CAPACITY	3
OPERATING ROUTINE	3
STOPPING	3
SECTION III MAINTENANCE	
A5 PUMP DISASSEMBLY AND ASSEMBLY	3 - 4
A9 SERIES 'A' PUMP DISASSEMBLY AND ASSEMBLY	4 - 5
A7/PM7 DISASSEMBLY AND ASSEMBLY	5 - 7
A7A/PM7A DISASSEMBLY AND ASSEMBLY	7 - 9
SECTION IV TROUBLE SHOOTING, NOMENCLATURE, ORDERING PROCEDURE AND PARTS LIST	
TROUBLE SHOOTING	9
NOMENCLATURE	10
ORDERING PROCEDURE	10
A5 PUMPS AND PARTS LIST	
1/3 HP, 1/2 HP, AND 3/4 HP	11
1 HP, 1½ HP AND 2 HP	12
A9 SERIES 'A' PUMPS AND PARTS LIST	
1/2 HP, 3/4 HP AND 1 HP	13
1 1/2 HP	14
2 HP	15
3 HP	16
5 HP	17
7 1/2 HP	18
10 HP AND 15 HP	19
A7 PUMPS AND PARTS LIST	
3/4", 1 1/4" AND 1 1/2"	20
2" AND 2 1/2"	21
PM7 PUMPS AND PARTS LIST	
1", 1 1/4" AND 1 1/2"	22
2" AND 2 1/2"	23
A7A PUMPS AND PARTS LIST	
3/4", 1 1/4" AND 1 1/2"	24
PM7A PUMPS AND PARTS LIST	
1", 1 1/4" AND 1 1/2"	25

INTRODUCTION

The Dunham-Bush Type A5, A7 and A9 are radially split, single stage, motor mounted centrifugal pumps. The PM7 is a radially split, single stage, close coupled pipe mounted centrifugal pump. These pumps are supplied with an end face mechanical shaft seal installed, which is especially selected for reliability and life on the particular pump application. All pumps are supplied as complete units including motor.

SECTION -1
PUMP INSTALLATION

A. LOCATION

1. For satisfactory operation of any centrifugal pump it is necessary that adequate "Net Positive Suction Head" (NPSH) be available at the pump suction connection (NPSH is the total head in feet absolute, less the vapor pressure of the liquid in feet absolute, available to the pump). For this reason the pump should be located as close to the liquid source as possible.
2. Adequate head room should be provided for the use of installing equipment.
3. Adequate space should be allowed for inspection during pump operation.

B. FOUNDATION

1. The foundation must be solid and substantial enough to absorb mechanical vibration. In general concrete foundations are the most satisfactory and when used, bolts should be supplied which are imbedded for pump footing. Bolts should be long enough to insure proper tightening (minimum of six (6) threads should protrude beyond nut), and it is recommended that each bolt (standard or "J" type) be fitted with a pipe sleeve that is approximately 2½ times the bolt diameter and whose length is twice the inside diameter of the sleeve. When using a standard bolt (figure 1) a washer should be used to support the head of the bolt in the sleeve. After the concrete foundation has been poured, the pipe sleeve remains in place allowing for alignment with the holes in the motor feet.
2. When "J" type bolts (figure 2) are used the same procedure is used except that no washer is needed.
3. If the foundation has been laid, holes may be drilled and expansion bolts used to anchor the pump to the foundation.

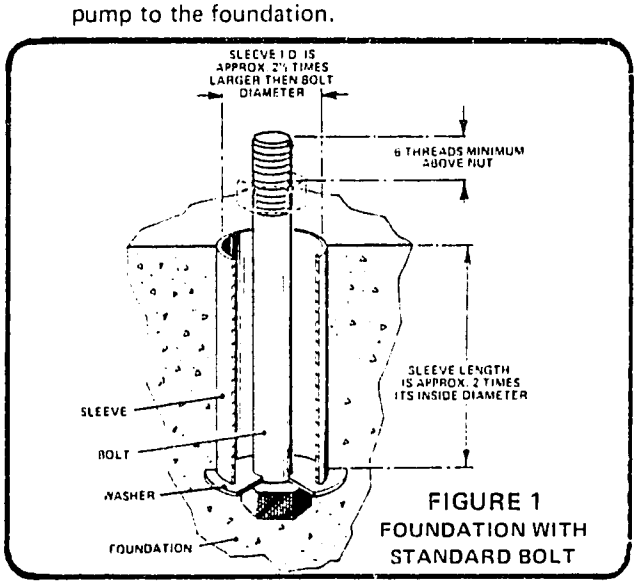

FIGURE 1
FOUNDATION WITH STANDARD BOLT

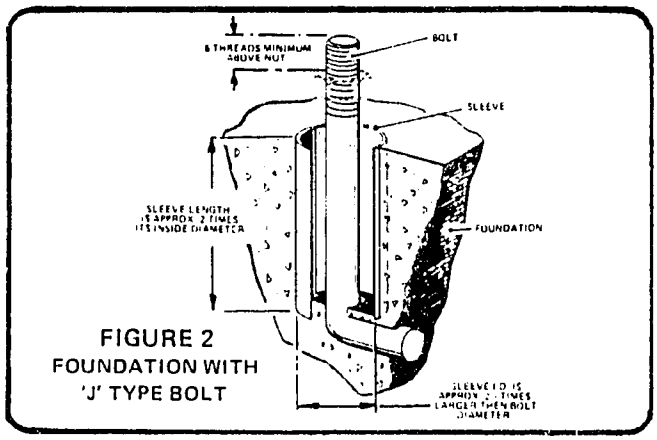

FIGURE 2
FOUNDATION WITH 'J' TYPE BOLT

C. MOUNTING PUMP

Foot Mounted

1. Uncrate the pump leaving all instructions attached and install at its' place of operation.
2. Locate the leveling plates and shims at each foundation bolt.
3. Level the motor perpendicular to shaft, shimming as necessary.
4. Level the motor parallel to shaft and tighten the nuts on the foundation bolts evenly.

Pipe Mounted

1. Horizontal Lines — Normally the pump is mounted with the motor perpendicular to the ground with the motor end up. The piping must be adequate to support both the piping and pump.
2. Vertical Lines — The motor will be parallel to the floor and may require additional support other than that offered by the piping.

D. PIPING

1. Both suction and discharge piping should be as short and as direct as possible. There should be as few fittings and bends as possible. Bends, where used should be of the long radius variety.
2. Piping should be supported near the pump to prevent strains from being transmitted to the pump, and piping at the pump suction and discharge should be as large or larger than the openings in the pump.
3. Gate valves and pressure gages should be installed in both the suction and discharge line to facilitate pump maintenance and performance checks.

E. SUCTION PIPING

1. Suction piping must be free of vapor trapping pockets
2. In horizontal piping leading to the pump only eccentric-reducers should be used (See Fig. 3 and 4).
3. The suction pipe must be free from air leaks and provisions should be made for the expansion of hot lines.

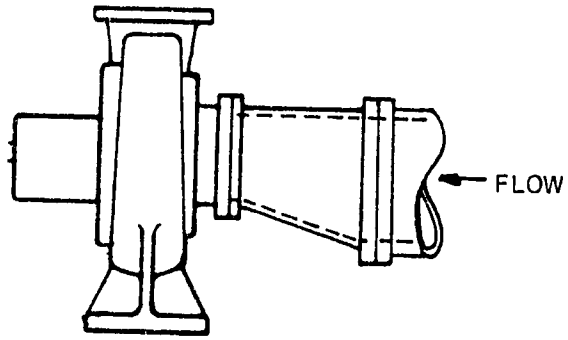

FIGURE 3
CORRECT SUCTION PIPING FOR ECCENTRIC REDUCER

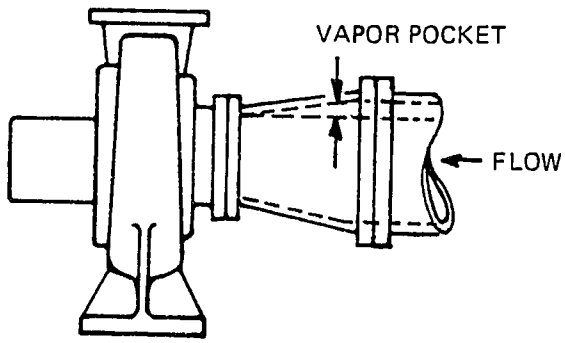

FIGURE 4
INCORRECT SUCTION PIPING FOR ECCENTRIC REDUCER

4. It is recommended that a strainer be installed near the pump suction inlet to catch scale or other foreign material. A pressure gage installed on each side of the strainer can be used for measuring the pressure drop across the strainer.

5. If a strainer or foot valve is to be used on the inlet end of the suction line, the free area through the strainer or valve should be approximately 2½ to 4 times the area of the suction pipe.

F. DISCHARGE PIPING

1. On some installations, a check valve and balancing cock in addition to a gate valve may be required in the discharge piping. The check valve would be used to prevent liquid from running back through the pump in case of failure of the motor. The balancing cock is used to control the pumps' operating capacity by providing a changeable control in the piping system. The gate valve would be used in priming, starting and shutting down the pump.

2. When valves are required in the discharge line, they should be located as near as possible to the pump.

3. In some applications when the pump may be operated with zero flow, provisions should be made for recirculating a portion of the liquid from the discharge to the suction of the pump to reduce the possibility of overheating.

G. PIPING FOR SPARE PUMPS

Spare pumps in high temperature service should be piped so that hot liquid from the discharge of the operating pump circulates continuously through a by-pass to the spare pump and back to the suction of the operating pump. This can greatly reduce thermal shock when the spare pump is started.

H. INSTALLING PUMP

1. Make up the piping to the suction and discharge connections of the pump. All piping must be properly supported by hangers and not by the pump. PM7 pumps must be supported within 18" of pump suction and discharge connections.

2. Wire the pump motor for the voltage required as specified on the wiring diagram located on the motor nameplate, or in cover of the motor terminal box. All wiring must be in accordance with local regulations. If the motor is damaged due to improper wiring, the guarantee is void.

SECTION – 2
PUMP OPERATION

A. STARTING PUMP

1. Open the suction and discharge valves to the pump. These pumps have a mechanical seal and must NOT be run dry. Open the cock at the top of the pump case to vent out any air.

   NOTE: a. If the pump is above the level of the liquid to be pumped, close the discharge valve. If the pump is below the level of the liquid, open the discharge valve 1½ to 2 turns.

   b. Prime the pump. All air and vapor must be removed. The pump case and suction pipe must be filled with liquid before the pump is started.

2. Rotate the pump shaft by hand (if possible) to be sure the pump is not binding. On some models the end of the motor shaft has a screwdriver slot. It may be used to turn the shaft. A check for sticking of the shaft should also be made after a prolonged pump shutdown.

3. Start the pump and check for correct rotation according to the arrow on the case. If it is running in the

wrong direction on three phase current, change any two leads to the motor. You must disconnect the power before changing the wiring.

4. Lack of capacity and head may indicate the passageways of the pump impeller have become clogged with foreign matter or that the motor speed is low. If speed of the motor is low, the wiring connections at the motor should be checked for miswiring or looseness. If the pump is wired for 460 volt current, but is actually operating on 230 volt current, the motor will never come up to proper speed and may burn out. If low voltage occurs, notify local power company. Slugging of air is another cause of low capacity and head on a closed system. Be sure the system is properly vented of all air -- See further notes under Trouble Shooting – Section IV.

WARNING - DO NOT ATTEMPT TO OPERATE PUMP WITH SUCTION VALVE CLOSED!

5. As soon as the pump is up to full speed, slowly open the discharge valve until it is completely open. Do not let the pump run with the discharge valve closed.

6. Check the pressure gages on each side of the strainer in the suction line. A pressure drop across the strainer indicates it is becoming clogged with dirt or scale. In this case, the pump should be shut down and the strainer screen cleaned or replaced. A clogged strainer can cause damage to the pump.

7. The pump should be shut down if motor bearings overheat, if there is undue vibration or noise, or if it fails to develop its rated discharge pressure at operating speed.

B. OPERATING AT REDUCED CAPACITY

If the pump is connected to a constant speed driver or motor, the capacity of the pump can be reduced by throttling the discharge. When throttling the discharge, a by-pass connection may be used to by-pass sufficient liquid back to the suction inlet to prevent overheating.

C. OPERATING ROUTINE

1. Check the bearing temperatures periodically. If there is overheating, check the motor to insure adequate lubrication. Normal inspection consists of periodic checks of motor lubrication.

2. Lubricating the pump motor should be done in accordance with manufacturer's recommendations.

3. Check all seals for leakage.

4. Check the suction and discharge pressure gages. If the differential pressure drops critically, shut down the pump at once.

D. STOPPING

The pump should be shut down rapidly to keep liquid in the pump and to prevent the parts from seizing. After stopping the driver, close the discharge valve and then the inlet valve, in that order. When pumps are operating in parallel, it is sometimes necessary to close the discharge valve immediately after stopping the driver to prevent reverse rotation. If the pumps are to remain idle under freezing conditions, precautions, such as draining the case, should be taken to avoid damage.

SECTION – 3
MAINTENANCE INSTRUCTIONS

A. A5 PUMP DISASSEMBLY AND ASSEMBLY
(Ref. Fig. 5 & 6)

1. Disconnect the power to pump.

2. Close the valves in suction and discharge lines or drain the system.

3. Remove the 8 hex head screws (11) holding the head (7) to the case (1). Disassemble the head (7) from the case (1) by sliding the motor back.

4. Remove the case gasket (5) and clean the gasket surfaces on the case (1) and head (7).

5. Remove the plug covering the shaft end in motor.

6. Hold motor shaft from turning by using a large bladed screwdriver in slot of motor shaft and remove the impeller nut (3) by turning it counter clockwise.

7. Using a screwdriver in the shaft slot remove the impeller (2) and stop washer (4) from shaft by turning it counter clockwise.

8. Remove the head (7) and mechanical seal (6) from the shaft by first removing 4 hex cap screws (10) and then pulling the head (7) from the motor (8).

9. Remove slinger (9) from the shaft.

10. Remove stationary mechanical seal (6a) from the head (7).

11. Clean the motor shaft with solvent and inspect it for the scrapes, gouges and scratches. Lightly polish the shaft if necessary to remove blemishes.

12. Lightly lubricate the O.D. of the stationary member of the new seal. With the seal seat towards the impeller, press the seal firmly into the head recess. Make sure that the seat is level and square.

NOTE: Extreme caution must be exercised not to scratch, gouge or otherwise mar the sealing surface of the mechanical seal or leakage will likely result.

13. Replace the slinger (9) on the shaft.

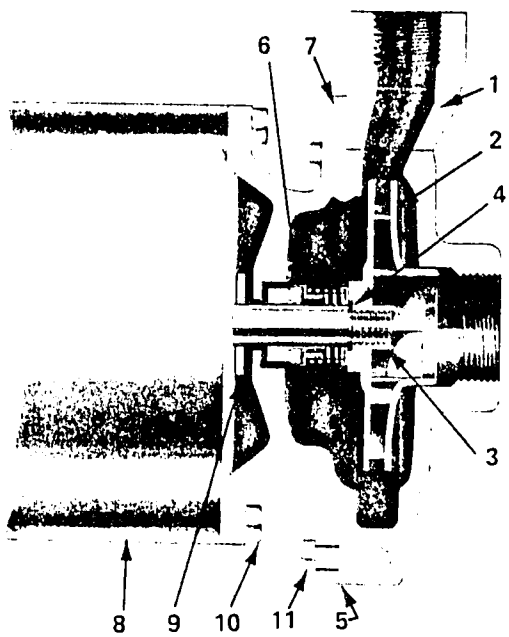

FIGURE 5
A5 PUMP

For Additional Information
On Seal (6)
Refer to Figure 6

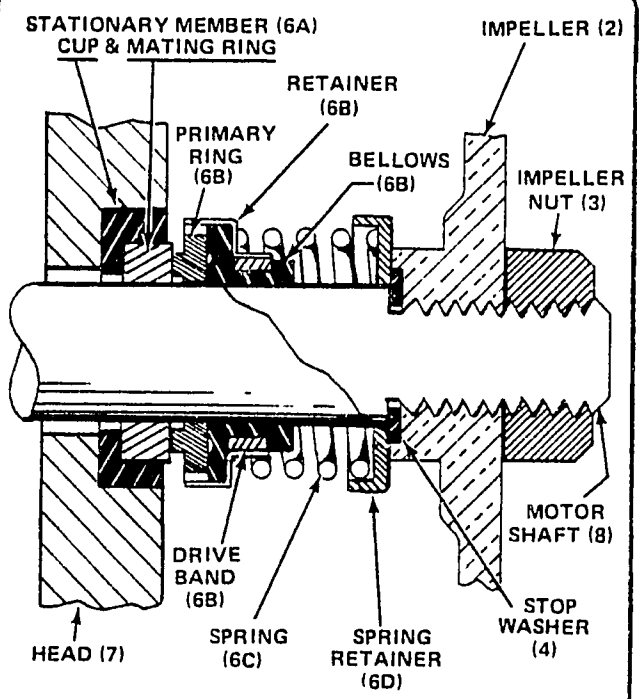

FIGURE 6
MECHANICAL SHAFT SEAL
FOR A5 PUMPS

14. Mount the head (7) on the motor (8) by using four hex head cap screws (10).

15. To assemble mechanical seal rotating element (6) onto the shaft:

    a. Lightly lubricate the I.D. of new seal boot (6B) and slide it over shaft with the carbon seal face towards the stationary seal face until seal faces meet.

    b. Place spring (6C) on the rotating member (seal boot 6B) so it seats properly against the shoulder.

    c. Place spring retainer (6D) against the spring. Be sure the rolled edge faces toward the spring.

16. Replace the stop washer (4) and screw the impeller (2) onto the shaft while holding shaft stationary with screwdriver placed in motor shaft slot. The stop washer has a radius machined on one of the outer diameter edges. The washer is to be assembled with this edge against the i · . :r. Make sure impeller is snugged up tight. Use a screwdriver to pry the spring retainer (6D) away from the impeller (2) to be sure that the retainer isn't caught between the shaft shoulder and impeller.

17. Replace impeller nut (3), snug nut up tight.

18. Place the gasket (5) on the head (7) and assemble both to the case (1) using 8 hex head cap screws (11).

19. Remount motor to base.

20. Open valves to pump and refill the system and check for leaks.

21. Reconnect power to pump.

B. A9 PUMP SERIES A DISASSEMBLY AND ASSEMBLY (Ref. Fig. 7 & 8)

1. Disconnect the power to pump.

2. Close the valves in suction and discharge lines or drain the system.

3. Remove the 12 hex head screws (13) holding the head (8) to the case (1). Disassemble the head (8) from the case (1) by sliding the motor back.

4. Remove impeller nut (3) by turning it counter clockwise.

5. Remove impeller (2) and its key (4) from the shaft.

6. To remove head (8), mechanical seal (7), gasket (5) and sleeve (11) remove the 4 hex head cap screws (14) and pull the head (8) from motor (9). Caution must be exercised not to scratch, mar or gouge the sleeve during this operation.

7. Remove slinger (10) and shield (12) from shaft.

8. Remove the mechanical seal stationary seat (7a) from the head (8).

9. Remove the gasket (6) from head (8) and clean gasket surfaces on both the case (1) and head (8).

10. Clean motor shaft with solvent.

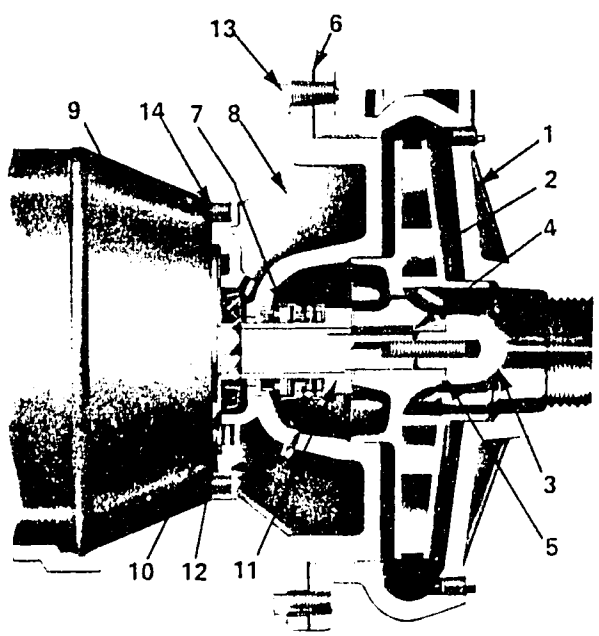

FIGURE 7
A9 PUMP

For Additional Information
On Seal (7)
Refer to Figure 8.

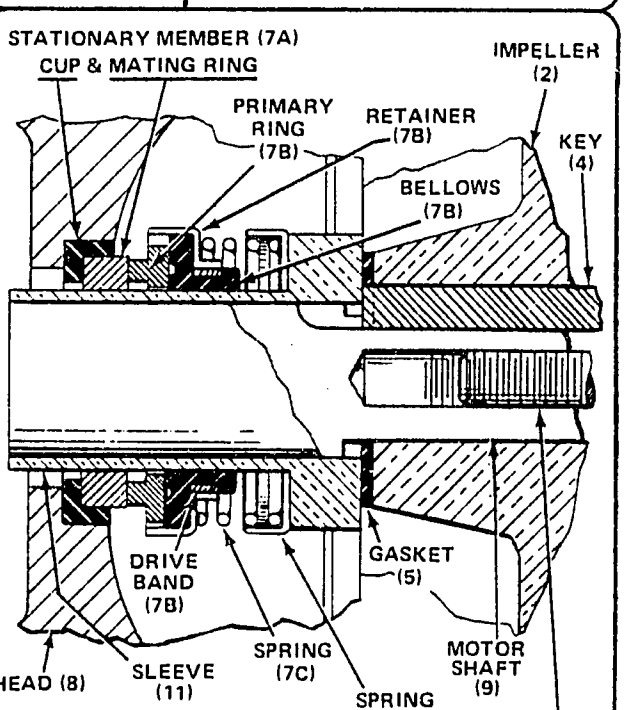

FIGURE 8
MECHANICAL SHAFT SEAL
FOR A9 PUMPS

11. Lightly oil O.D. of new seal stationary seat (7A). With the sealing face towards impeller, press the seal seat firmly into the head recess, being sure the seat is level and square.

Caution: Extreme care must be exercised not to scratch, mar or gouge the sealing face of the stationary seal or leakage will occur.

12. Replace shield (12) and slinger (10) onto shaft.

13. Mount the head (8) to the motor (9) by using 4 hex head cap screws (14).

14. To assemble mechanical-seal-rotating element (7B, C & D) onto the sleeve (11):

    a. Slip spring retainer (7D) over sleeve (11) with the bent edge facing away from the shoulder.

    b. Place spring (7C) over sleeve.

    c. Lightly lubricate I.D. of new seal boot (7B) and slide it over the sleeve with the carbon seal face away from sleeve shoulder.

15. Place a light coat of Teflon paste on I.D. of sleeve and slide it over the shaft until seal faces butt together firmly and squarely.

16. Brush both sides of gasket (5) with Teflon paste and position it on the sleeve (11).

17. Insert key (4) in keyway and replace the impeller (2) on shaft.

18. Place a small amount of Teflon paste on flat side of impeller nut (3) and replace it on the shaft. Turn the impeller to check its alignment.

19. Replace the gasket (6) and assemble the pump head (8) to the pump case (1) using 12 hex head cap screws (13).

20. Remount the motor to base.

21. Open the valves to pump and refill the system and check the pump for leaks.

22. Reconnect power to the pump.

C. A7/PM7 PUMP DISASSEMBLY AND ASSEMBLY (Ref. Fig. 9 & 10) WITH JM FRAME MOTOR

1. Disconnect power to pump.

2. Close the valves in suction and discharge lines or drain the system.

3. (PM7 Only). Remove the seal flush piping line (8 & 9) connected between the head (7) and pump case (11).

4. Remove 8 hex head cap screws (1), holding the head (7) to the case (11) and remove motor head assembly.

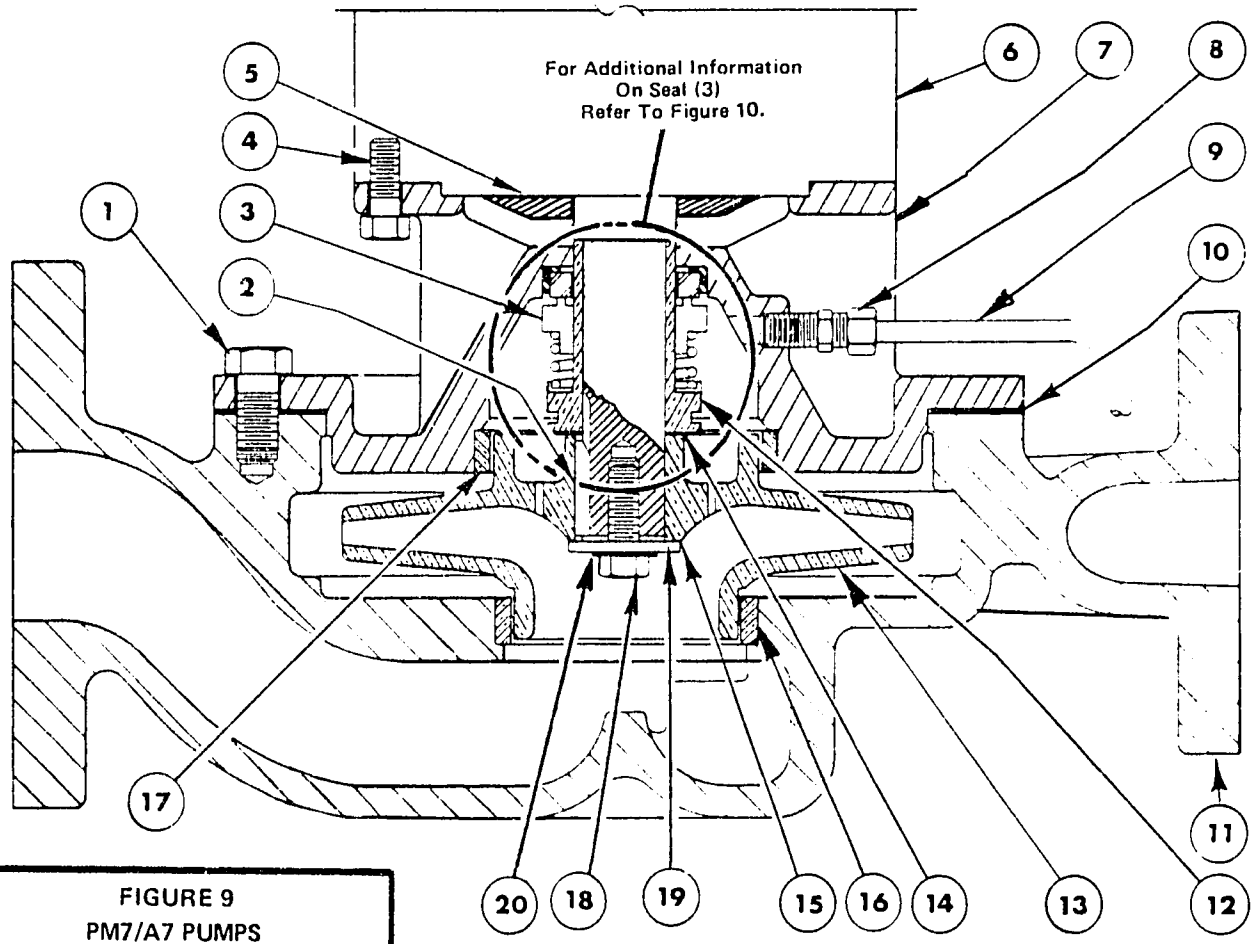

FIGURE 9
PM7/A7 PUMPS

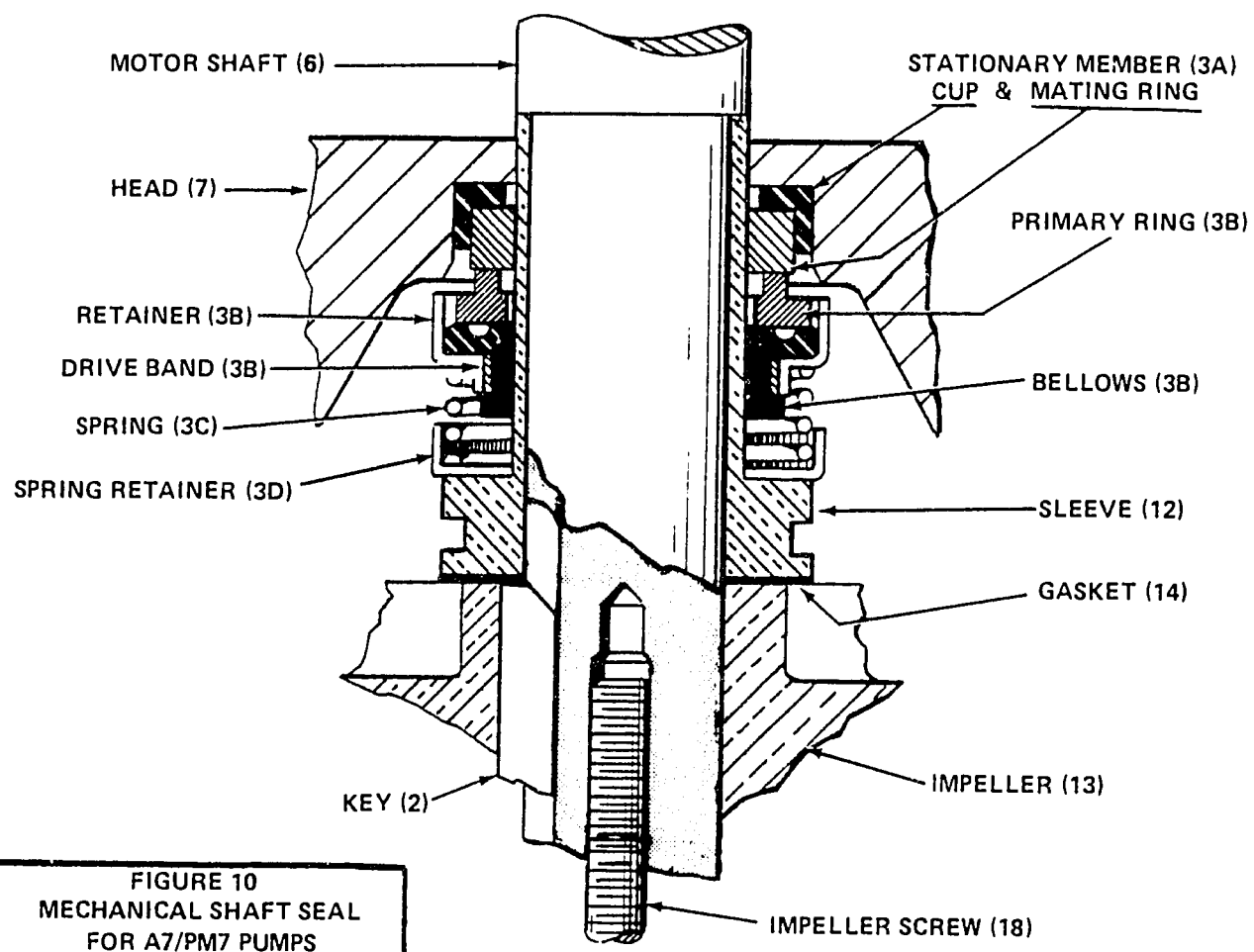

FIGURE 10
MECHANICAL SHAFT SEAL
FOR A7/PM7 PUMPS

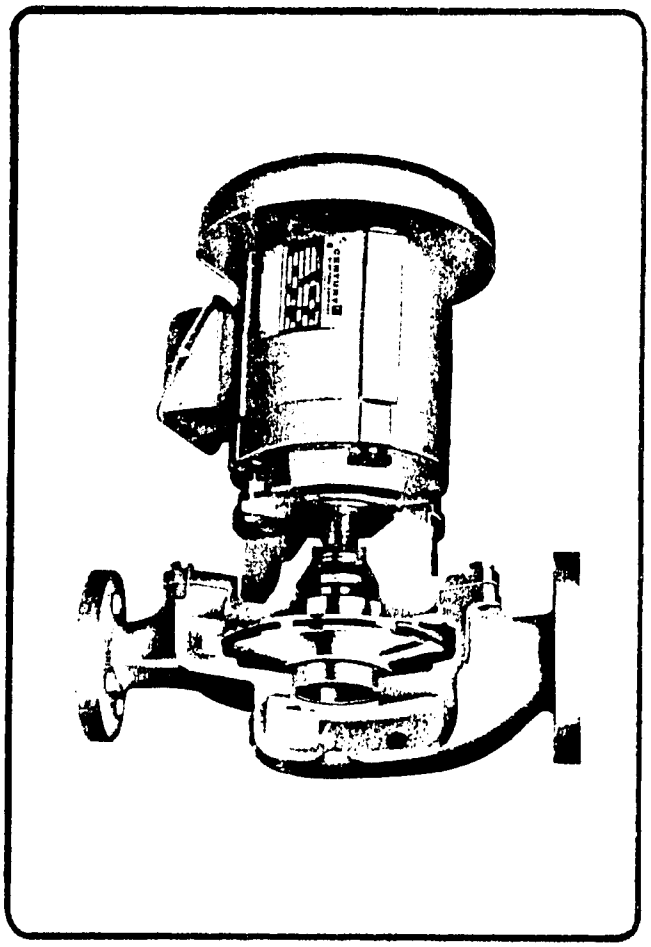

5. Remove the case gasket (10) and clean the gasket surfaces of both the head (7) and case (11).

6. Remove the impeller screw (18) by turning it counter clockwise and remove washers (19) and (20) and the gasket (15). Clean the gasket surfaces.

7. Remove the impeller (13) and its key (2) from the shaft motor.

8. Remove the mechanical seal (3) and sleeve (12) from the shaft. Remove gasket (14) from either the sleeve or impeller and clean the gasket surfaces.

9. Remove head (7) from the motor (6) by removing 4 hex head cap screws (4).

10. Clean the motor shaft with solvent.

11. Remove the stationary member (3A) of the mechanical seal from the head (7).

12. Lightly lubricate the O.D. of new mechanical seal stationary seal (3A) and press it into the recess of the head (7). Be sure that the seal is level and square.

    Caution: Extreme care must be exercised not to scratch, mar or gouge the sealing face of the stationary seal or leakage will occur.

13. Assemble the head (7) onto the motor (6) using 4 hex head cap screws (4).

14. Assemble the rotating seal elements onto the sleeve (12).

    a. Slip spring retainer (3D) over sleeve (12) with the bent edge facing away from the shoulder.

    b. Place spring (3C) over sleeve.

    c. Lightly lubricate I.D. of new seal boot (3B) and slide it over sleeve with the carbon seal face away from sleeve shoulder.

15. Place a light coat of Teflon paste on I.D. of the sleeve and slide it over the shaft until seal faces butt together firmly and squarely.

16. Brush both sides of gasket (14) with Teflon paste and position it on the sleeve (12).

17. Replace key (2) in keyway and slide impeller (13) onto shaft.

18. Brush both sides of gasket (15) with Teflon paste and place on impeller. Place the sealing washer (19) and washer (20) on the impeller cap screw (18) and tighten onto the shaft.

19. Place gasket (10) on head (7) and assemble it to the case (11) using 9 hex head cap screws (1).

20. Replace the seal flush piping (8 & 9).

21. Open the valves to the pump or refill system and check pump for leaks.

22. Reconnect power to pump and check again for leaks.

D. A7A/PM7A PUMP DISASSEMBLY AND ASSEMBLY (Ref. Fig. 11 & 12) WITH JET PUMP MOTOR

1. Disconnect power to pump

2. Close the valves in the suction and discharge piping or drain the system.

3. (PM7A Only) Remove the seal flush piping line (8 & 9) between the head (7) and case (11).

4. Remove 8 hex head cap screws (1) holding the head (7) to case (11) and remove the motor-head assembly.

5. Remove the case gasket (10) and clean the gasket surfaces of both the head (7) and the case (11).

6. Remove the impeller (12) and the impeller nut (15) by turning counter clockwise. Remove the impeller nut (15) from the impeller (12).

7. Remove loose mechanical seal parts from shaft.

8. Loosen 4 hex screws (4) between the motor and head and remove the retainer clips (3). Remove head (7) from motor (6).

9. Remove slinger (5) from the motor shaft and clean shaft with a solvent. Inspect it for scratches and lightly polish it if necessary to remove blemishes.

10. Remove mechanical stationary seal (2A) from head (7).

11. Lightly lubricate the O.D. of a new mechanical stationary seal (2A) and press into recess of head (7) making sure that the seal is level and square.

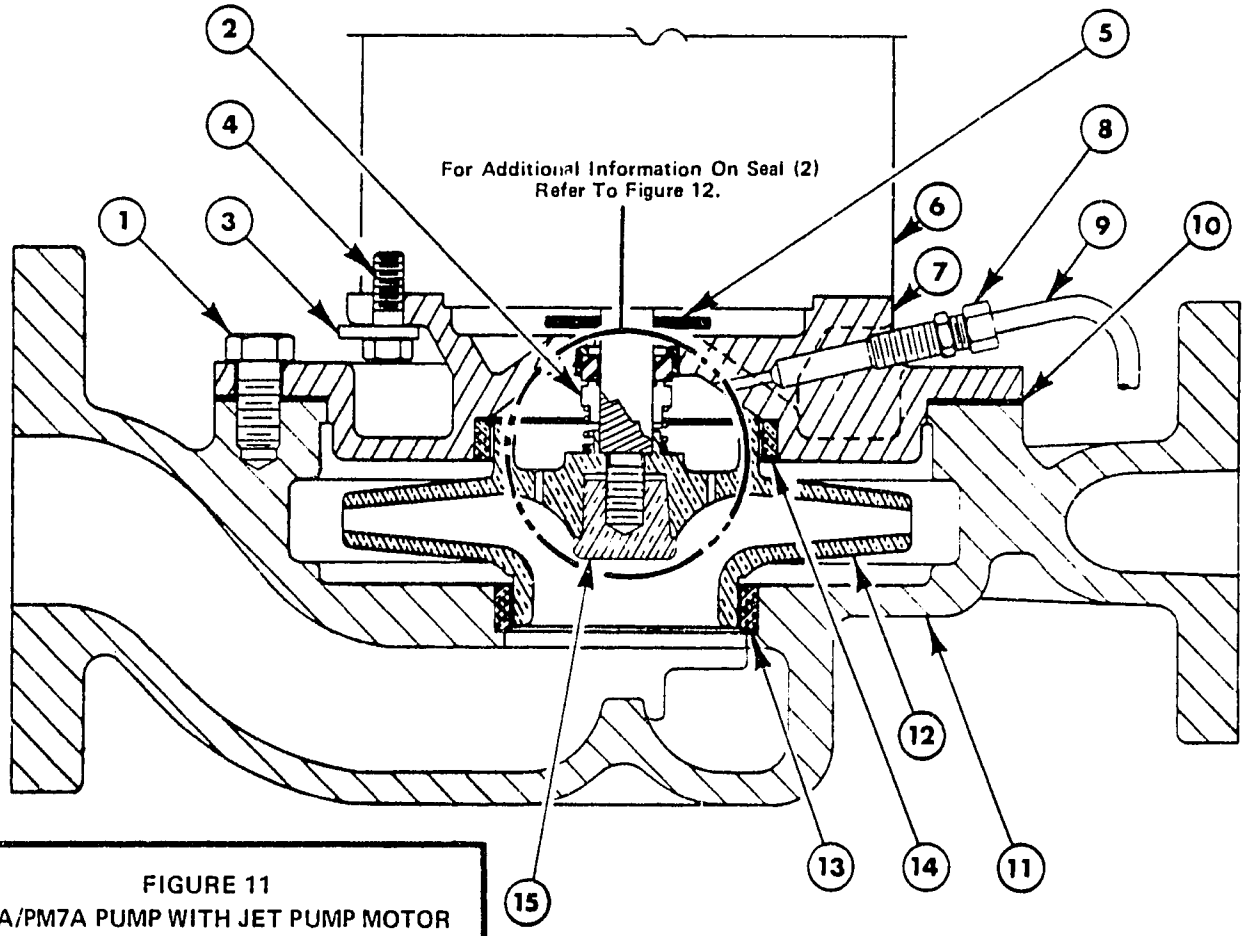

FIGURE 11
A7A/PM7A PUMP WITH JET PUMP MOTOR

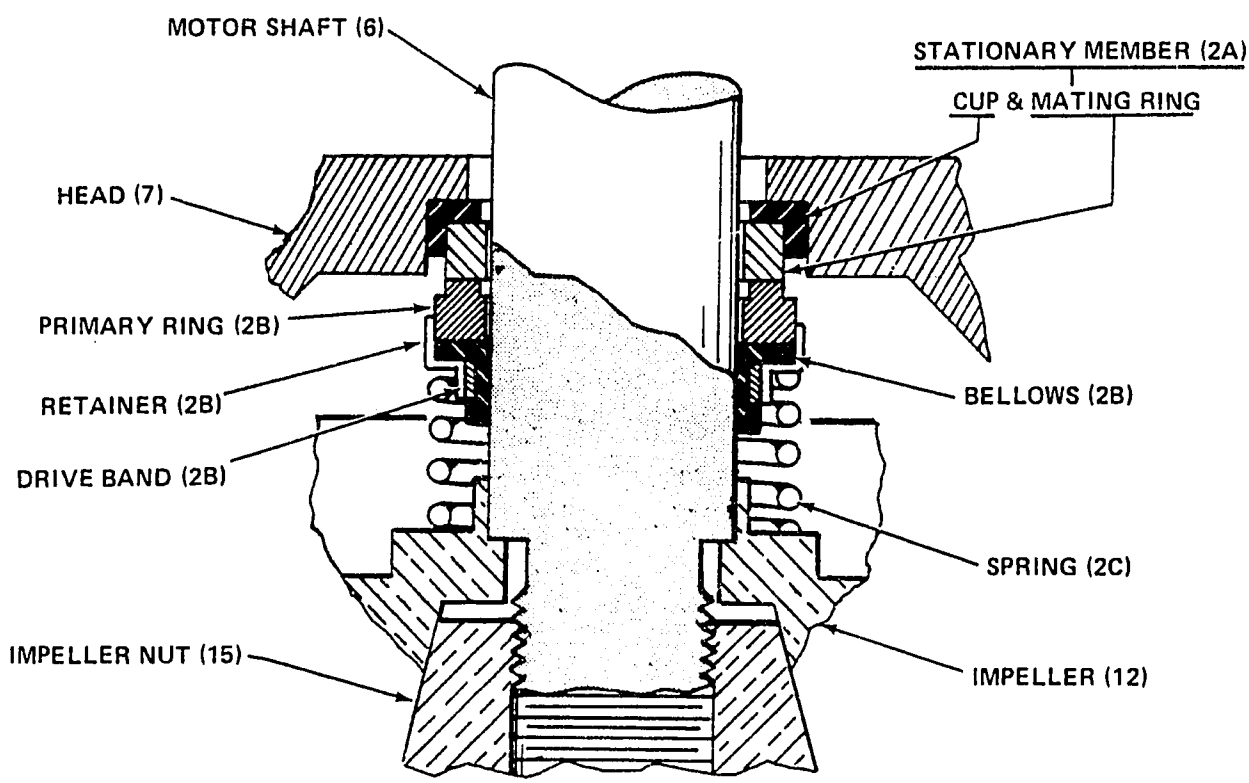

FIGURE 12
MECHANICAL SHAFT SEAL
FOR A7A/PM7A PUMPS

812

11. (Continued)

Caution: Extreme care must be exercised not to scratch, mar or gouge the face of the stationary seal as seal leakage will result.

12. Replace slinger (5) on the shaft and assemble the head (7) to the motor (6) by replacing the 4 retainer clips (3) on shank of cap screws (4). Tighten the cap screws.

13. Assemble rotating seal elements onto shaft.
    a. Lightly lubricate the I.D. of new seal boot (2B) and slide it over the shaft with the carbon seal face towards the stationary seal face.
    b. Place spring (2C) over shaft.

14. Replace impeller (12). Be sure the spring (2C) is seated properly against the impeller face.

15. Replace the impeller nut (15) and torque it to 15 lbs.

16. Place the gasket (10) on head (7) and assemble it to the case (11) using 8 hex head screws.

17. Replace the seal flush line (8 and 9).

18. Open valves to the pump and refill the system. Check the pump for leaks.

19. Reconnect power to pump and check again for leaks.

SECTION IV - TROUBLE SHOOTING

Operating troubles and their probable causes are as follows:

A. INSUFFICIENT OR NO DISCHARGE

1. Wrong direction of rotation.
2. Pump not primed.
3. Suction line is not full of liquid.
4. Air or vapor in suction line.
5. Suction pipe not submerged enough.
6. Available NPSH not sufficient.
7. Pump not up to rated speed.
8. Too much system head.

B. INSUFFICIENT PRESSURE

1. Wrong direction of rotation.
2. Suction line not full of liquid.
3. Air or vapor in liquid.
4. Air leaks in suction line.

B. INSUFFICIENT PRESSURE (Continued)

5. Suction line not submerged enough.
6. Available NPSH not sufficient.
7. Pump not up to rated speed.
8. Mechanical defects:
    a. Impeller damaged.
    b. Internal leakage (clearances).

C. CAVITATION AND NOISE

1. Air or gas in liquid.
2. Suction line not filled with liquid.
3. Suction line not submerged enough.
4. Available NPSH not sufficient.

D. PUMP LOSES SUCTION AFTER STARTING

1. Suction line not full of liquid.
2. Air leaks in suction line.
3. Air or vapor in liquid.
4. Air or vapor in suction line.
5. Suction line not submerged enough.
6. Available NPSH not sufficient.

E. EXCESSIVE POWER CONSUMPTION

1. Speed too high
2. Insufficient head.
3. Mechanical Defects:
    a. Shaft bent.
    b. Rotating element dragging.
    c. Piping improperly supported.

F. VIBRATION

1. Suction line not full of liquid.
2. Air or vapor in suction line.
3. Worn or loose motor bearings.
4. Rotating element out of balance.
5. Shaft bent.
6. Foundation not rigid.
7. Vibration in the driver.
8. Wrong location of control valve.
9. Piping improperly supported.

NOMENCLATURE

10 HP - 2½ - A9 - D 65 S - 2 - A

- HORSEPOWER
- DISCHARGE (IN INCHES)
- TYPE MODEL
- IMPELLER STYLE
- IMPELLER DIAMETER
  - 6 5
  - EIGHTS OF AN INCH (5/8")
  - INCHES (6")
  - TOTAL—6-5/8 INCHES
- STANDARD IMPELLER
- RPM
  - 1 - 1750
  - 2 - 3450
- SERIES

ORDERING PROCEDURE

1. Complete part number and description is required when ordering.
2. When a part number is not known or shown in the parts catalog, the complete model and serial number of the unit on which the part is to be used must be given.
3. Send all orders to:

   DUNHAM-BUSH, INC., PARTS DEPT.
   811 E. MAIN ST.
   MARSHALLTOWN, IOWA, 50158

4. Prices can be found in the latest revision of Form 17448 and are for one item or kit as applicable.
5. Minimum billing is $25.00.
6. All prices are subject to federal, state, local or other taxes which may be applicable.
7. All orders requiring **special handling** will have a surcharge of $25.00 or the actual cost of this requirement whichever is greater.
8. Dunham-Bush reserves the right to substitute parts if they are interchangeable with those ordered. The invoice will reflect the cost of the actual part shipped.
9. Refer to the latest revision of Form 1278 for terms of sale.

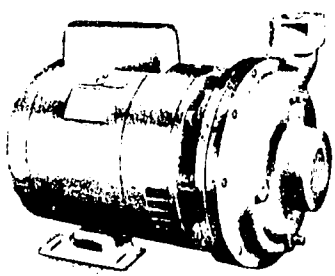

TYPE A5 PUMP

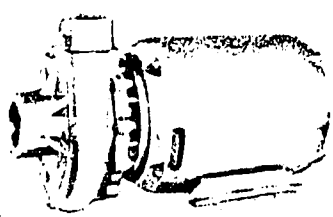

TYPE A9 PUMP

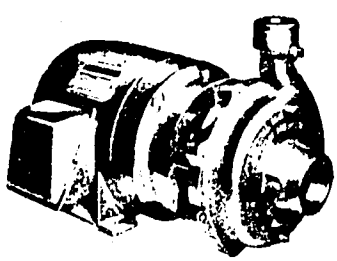

TYPE A7A AND A7 PUMPS

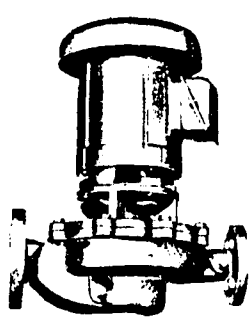

TYPE PM7 AND PM7A PUMPS

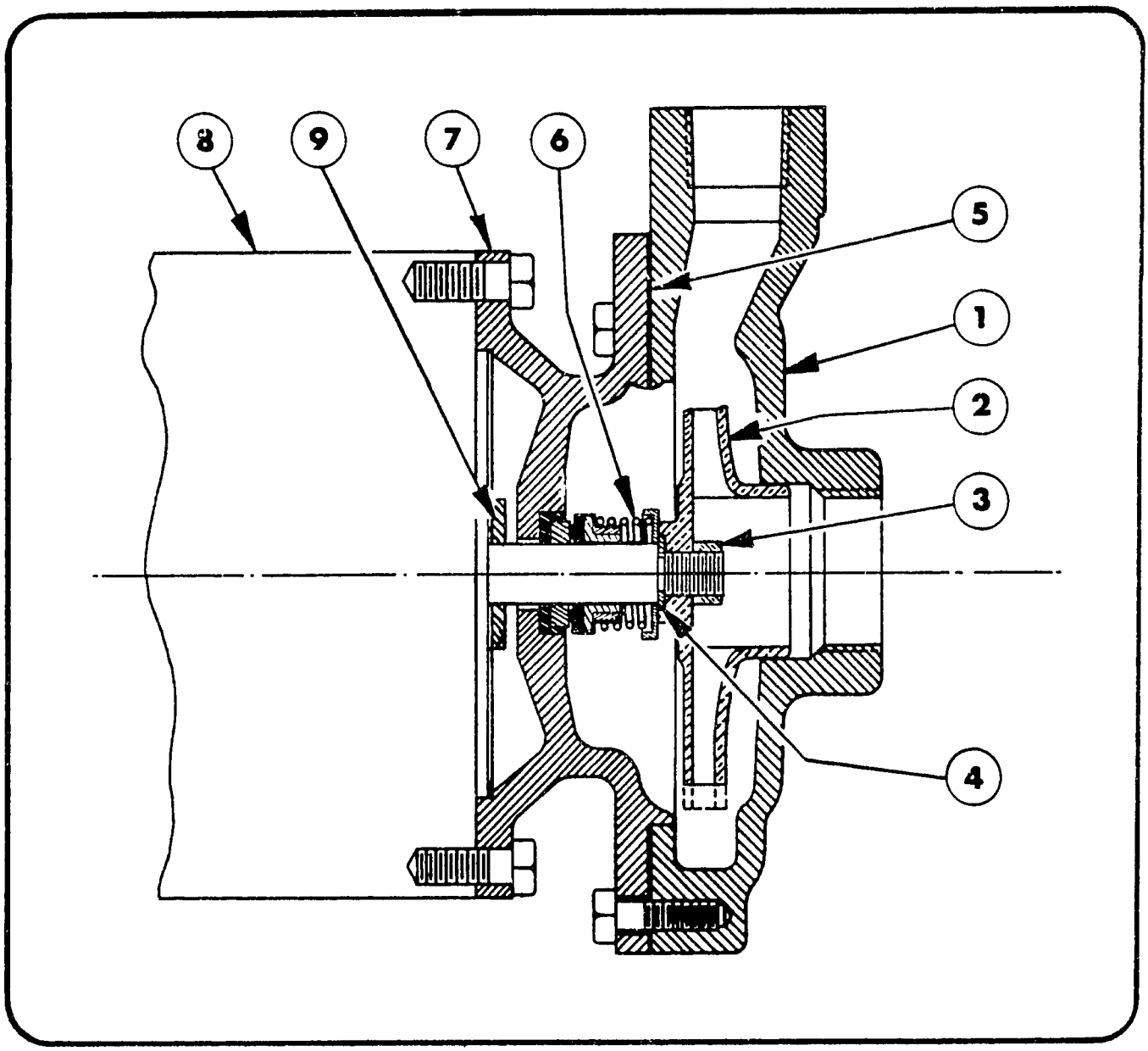

A5 PUMP AND PARTS LIST

1/3 HP, 1/2 HP AND 3/4 HP

	PART NUMBER AND DESCRIPTION	1/3 HP 1" 1φ & 3φ A5C2	1/3 HP 1 1/2" 1φ & 3φ A5C2	1/2 HP 1" 1φ & 3φ A5C2	1/2 HP 1 1/2" 1φ & 3φ A5C2	3/4 HP 3/4" 1φ & 3φ A5C2	3/4 HP 1 1/2" 1φ & 3φ A5C2
1	CASE (CAST IRON) CASE (BRONZE)	E6046 E6078	E6048 E6080	E6045 E6078	E6048 E6080	E6041 E6077	E6048 E6080
2	IMPELLER	D5197x 3 15/16"	D5203x 3 1/4"	D5197x 4 5/16"	D5203x 3 5/8"	D5193x 4 5/16"	D5203x 4 3/32"
3	NUT - IMPELLER	P-116	P-116	P-116	P-116	P-116	P-116
4	WASHER	C8709	C8709	C8709	C8709	C8709	C8709
5	GASKET-CASE *	D5352	D5352	D5352	D5352	D5352	D5352
6	SEAL-SHAFT *	472	472	472	472	472	472
7	HEAD (CAST IRON) HEAD (BRONZE)	E6042 E6081	E6042 E6081	E6042 E6081	E6042 E6081	E6042 E6081	E6042 E6081
8	MOTOR	Contact Dunham-Bush, Inc., Marshalltown, Iowa					
9	SLINGER	C8854	C8854	C8854	C8854	C8854	C8854

NOTES: 1. NON-STANDARD pump parts are not shown. When ordering repair parts, refer to page 10 of this catalog.
2. * = These parts are required when replacing shaft seal.

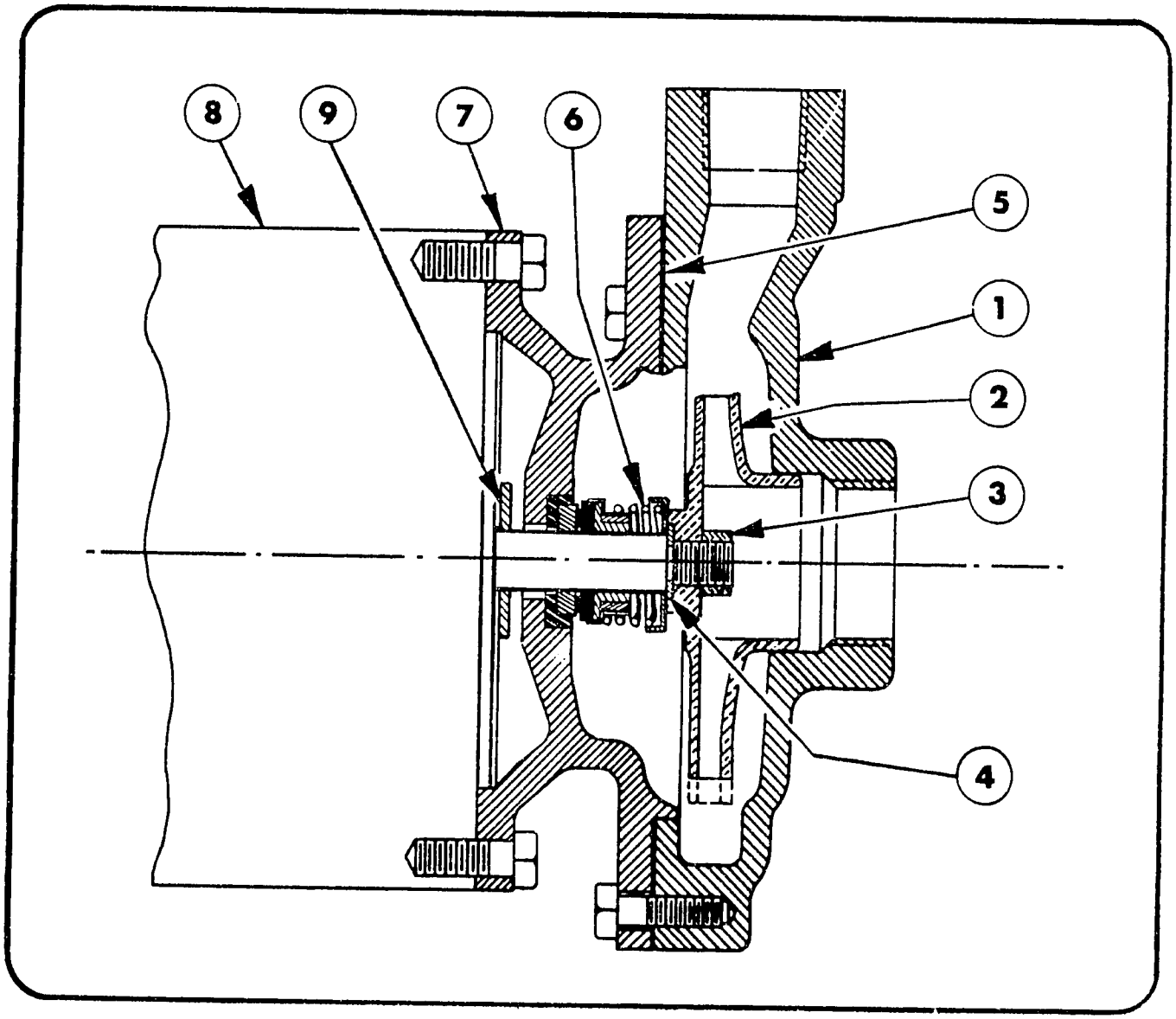

A5 PUMP AND PARTS LIST

1 HP, 1½ HP AND 2 HP

	PART NUMBER AND DESCRIPTION	1 HP ¾" 1ϕ & 3ϕ A5A2	1 HP 1½" 1ϕ & 3ϕ A5C2	1½ HP ¾" 1ϕ & 3ϕ A5A2	1½ HP 1¼" 1ϕ & 3ϕ A5B2	2 HP 1" 1ϕ & 3ϕ A5A2	2 HP 1¼" 1ϕ & 3ϕ A5B2	2 HP 1½" 1ϕ & 3ϕ A5B2
1	CASE (CAST IRON) CASE (BRONZE)	E6041 E6077	E6048 E6080	E6041 E6077	E6047 E6079	E6046 E6078	E6047 E6079	E6048 E6080
2	IMPELLER	D5193x 4 9/16"	D5203x 4 5/16"	D5193x 5"	D5199x 4 1/8"	D5195x 4 1/2"	D5199x 4 1/2"	D5202x 4 1/8"
3	NUT–IMPELLER	P-116	P-116	P-116	P-116	P-116	P-116	P-116
4	WASHER	C8709	C8709	C8709	C8709	C8709	C8709	C8709
5	GASKET–CASE *	D5352	D5352	D5352	D5352	D5352	D5352	D5352
6	SEAL–SHAFT *	472	472	472	472	472	472	472
7	HEAD (CAST IRON) HEAD (BRONZE)	E6042 E6081	E6042 E6081	E6042 E6081	E6042 E6081	E6042 E6081	E6042 E6081	E6042 E6081
8	MOTOR	Contact Dunham-Bush, Inc., Marshalltown, Iowa						
9	SLINGER	C8854	C8854	C8854	C8854	C8854	C8854	C8854

NOTES: 1. NON-STANDARD pump parts are not shown. When ordering repair parts, refer to page 10 of this catalog.
2. * = These parts are required when replacing shaft seal.

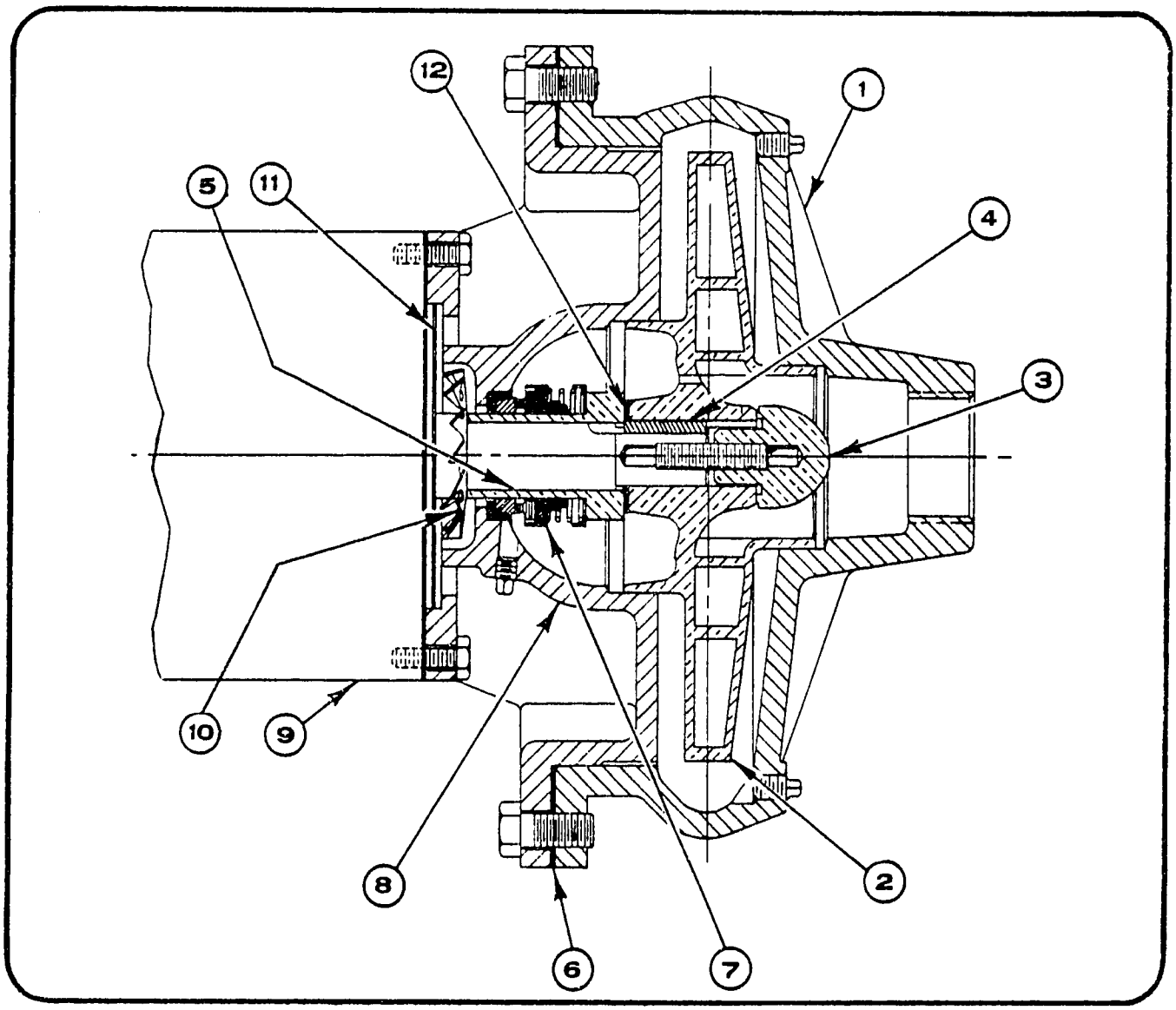

A9 PUMP AND PARTS LIST
SERIES A - ½ HP, ¾ HP AND 1 HP

	PART NUMBER AND DESCRIPTION	½ HP 1" 1ϕ & 3ϕ A9C1A	¾ HP 1" 1ϕ & 3ϕ A9C1A	¾ HP 1¼" 1ϕ & 3ϕ A9D1A	1 HP 1" 1ϕ & 3ϕ A9C1A	1 HP 1¼" 1ϕ & 3ϕ A9D1A	1 HP 2" 1ϕ & 3ϕ A9D1A
1	CASE (CAST IRON) CASE (BRONZE)	F541 D2-76	F541 D2-76	F540 D2-74	F541 D2-76	F540 D2-74	F544 D2-80
2	IMPELLER (BRONZE)	C2-3211X 6 1/16"	C2-3211X 6 3/4"	C2-3213X 4 15/16"	C2-3211X 7 5/16"	C2-3213X 5 15/16"	C2-3214X 5 3/8
3	STUD & NUT ASSEMBLY	C10035 A2-3898	C10035 A2-3898	C10035 A2-3898	C10035 A2-3898	C10035 A2-3898	C10035 A2-3898
4	KEY	C7763	C7763	C7763	C7763	C7763	C7763
5	SLEEVE *	A2-3905	A2-3905	A2-3905	A2-3905	A2-3905	A2-3905
6	GASKET *	D5450	D5450	D5450	D5450	D5450	D5450
7	SHAFT SEAL *	3179	3179	3179	3179	3179	3179
8	HEAD (CAST IRON) HEAD (BRONZE)	D2-1478 D2-1480	D2-1478 D2-1480	D2-1478 D2-1480	D2-1478 D2-1480	D2-1478 D2-1480	D2-1478 D2-1480
9	MOTOR	Contact Dunham-Bush, Inc., Marshalltown, Iowa					
10	SLINGER	C10038	C10038	C10038	C10038	C10038	C10038
11	SHIELD	C8958	C8958	C8958	C8958	C8958	C8958
12	GASKET *	A2-3020	A2-3020	A2-3020	A2-3020	A2-3020	A2-3020

NOTES: 1. NON-STANDARD pump parts are not shown. When ordering repair parts, refer to page 10 of this catalog.
2. * = These parts are required when replacing shaft seal.

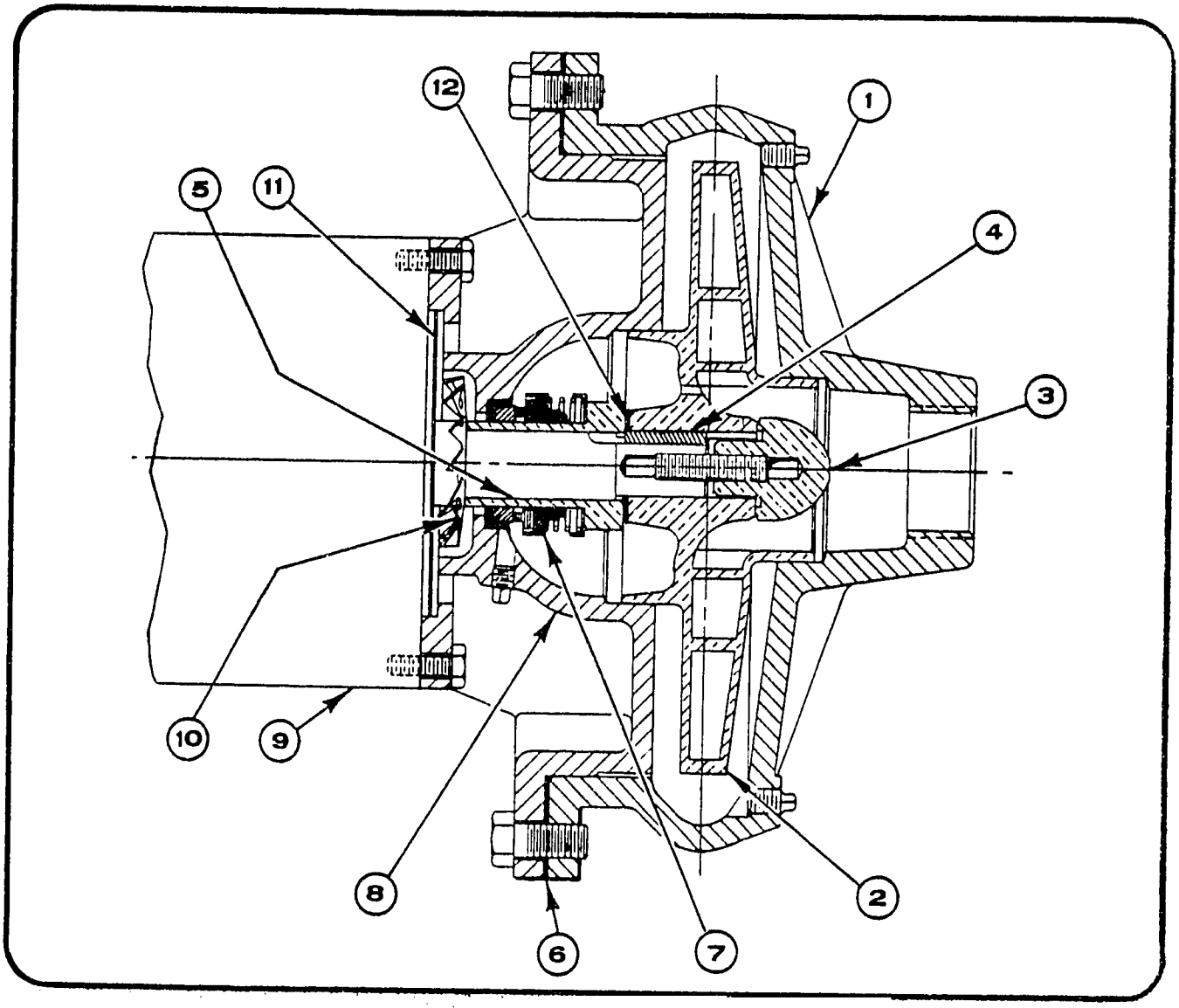

A9 PUMP AND PARTS LIST
SERIES A – 1½ HP

PART NUMBER AND DESCRIPTION	1½ HP 1" 1ϕ & 3ϕ A9C1A	1½ HP 1¼" 1ϕ & 3ϕ A9D1A	1½ HP 2" 1ϕ & 3ϕ A9D1A	1½ HP 2½" 1ϕ & 3ϕ A9D1A
1 CASE (CAST IRON) CASE (BRONZE)	D541 D2-76	F540 D2-74	F544 D2-80	F545 D2-79
2 IMPELLER (BRONZE)	C2-3211X $8^{7}/_{16}$"	C2-3213X $6^{3}/_{8}$"	C2-3214X $5^{29}/_{32}$"	C2-3215X $5^{21}/_{33}$"
3 STUD & NUT ASSEMBLY	C10035 A2-3898	C10035 A2-3898	C10035 A2-3898	C10035 A2-3898
4 KEY	C7763	C7763	C7763	C7763
5 SLEEVE *	A2-3905	A2-3905	A2-3905	A2-3905
6 GASKET *	D5450	D5450	D5450	D5450
7 SHAFT SEAL *	3179	3179	3179	3179
8 HEAD (CAST IRON) HEAD (BRONZE)	D2-1478 D2-1480	D2-1478 D2-1480	D2-1478 D2-1479	D2-1478 D2-1480
9 MOTOR	Contact Dunham-Bush, Inc., Marshalltown, Iowa			
10 SLINGER	C10038	C10038	C10038	C10038
11 SHIELD	C8958	C8958	C8958	C8958
12 GASKET *	A2-3020	A2-3020	A2-3020	A2-3020

NOTES: 1. NON-STANDARD pump parts are not shown. When ordering repair parts, refer to page 10 of this catalog.
2. * = These parts are required when replacing shaft seal.

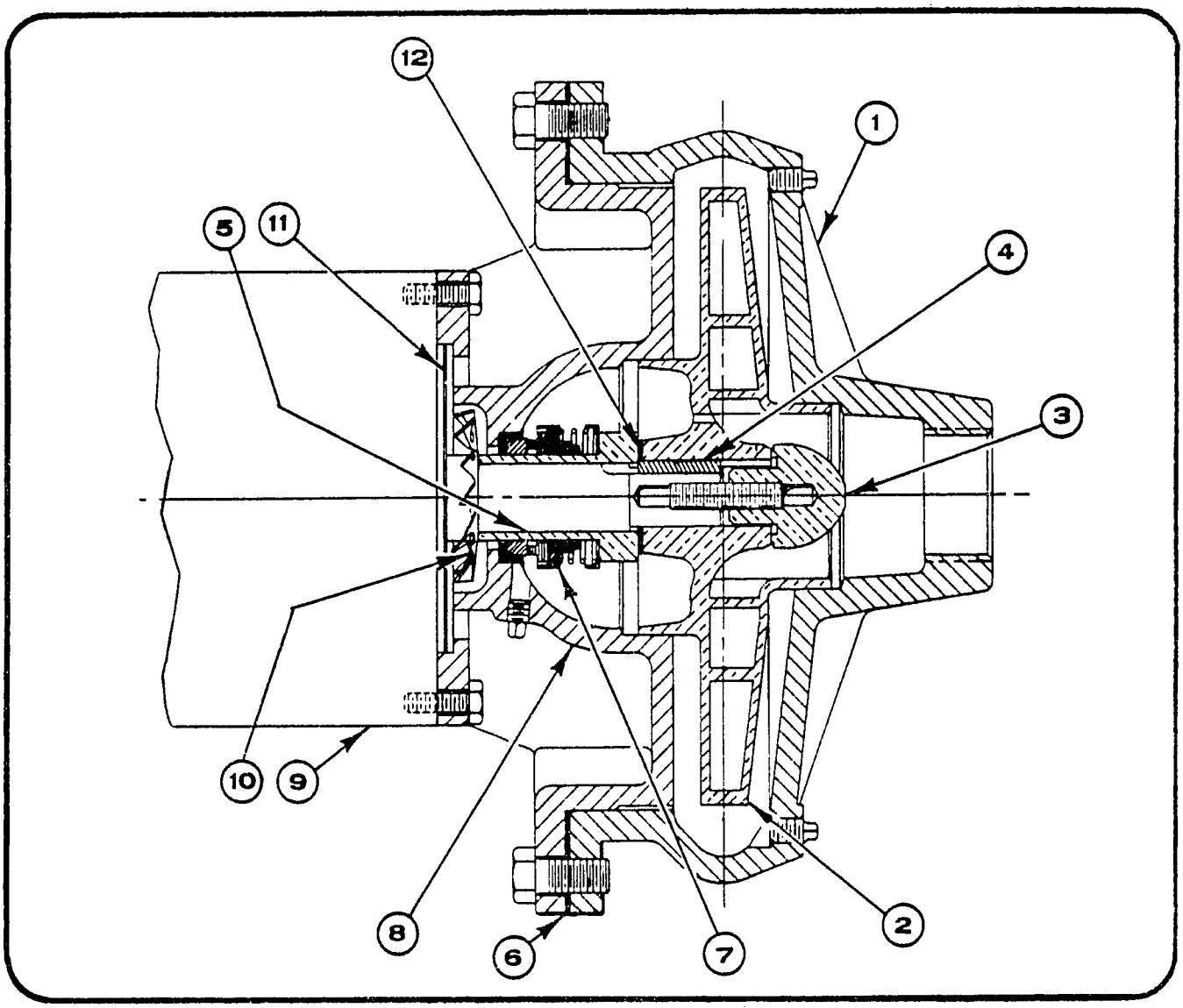

A9 PUMP AND PARTS LIST
SERIES A - 2 HP

	PART NUMBER AND DESCRIPTION	2 HP 1" 1ϕ A9C1A	2 HP 1" 3ϕ A9C1A	2 HP 1¼" 1ϕ A9D1A	2 HP 1¼" 3ϕ A9D1A	2 HP 2" 1ϕ D9D1A	2 HP 2" 3ϕ A9D1A	2 HP 2½" 1ϕ A9D1A	2 HP 2½" 3ϕ A9D1A
1	CASE (CAST IRON) CASE (BRONZE)	F541 D2-76	F541 D2-76	F540 D2-74	F540 D2-74	F544 D2-80	F544 D2-80	F545 D2-79	F545 D2-79
2	IMPELLER (BRONZE)	C2-3211X 9"	C2-3211X 9"	C2-3213X 7 3/16"	C2-3213X 7 3/16"	C2-3214X 6 1/2"	C2-3214X 6 1/2"	C2-3215X 6 1/8"	C2-3215X 6 1/8"
3	STUD & NUT ASSEMBLY	C10035 A2-3898	C10035 A2-3898	C10035 A2-3898	C10035 A2-3898	C10035 A2-3898	C10035 A2-3898	C10035 A2-3898	C10035 A2-3898
4	KEY	C7763	C7763	C7763	C7763	C7763	C7763	C7763	C7763
5	SLEEVE *	A2-3905	A2-3905	A2-3905	A2-3905	A2-3905	A2-3905	A2-3905	A2-3905
6	GASKET *	D5450	D5450	D5450	D5450	D5450	D5450	D5450	D5450
7	SHAFT SEAL *	3179	3179	3179	3179	3179	3179	3179	3179
8	HEAD (CAST IRON) HEAD (BRONZE)	D2-1478 D2-1480	D2-1478 D2-1480	D2-1478 D2-1480	D2-1478 D2-1480	D2-1478 D2-1480	D2-1478 D2-1480	D2-1478 D2-1480	D2-1478 D2-1480
9	MOTOR	Contact Dunham-Bush, Inc., Marshalltown, Iowa							
10	SLINGER	C10038	C10038	C10038	C10038	C10038	C10038	C10038	C10038
11	SHIELD	C8958	C8958	C8958	C8958	C8958	C8958	C8958	C8958
12	GASKET *	A2-3020	A2-3020	A2-3020	A2-3020	A2-3020	A2-3020	A2-3020	A2-3020

NOTES: 1. NON-STANDARD pump parts are not shown. When ordering repair parts, refer to page 10 of this catalog.
2. * = These parts are required when replacing shaft seal.

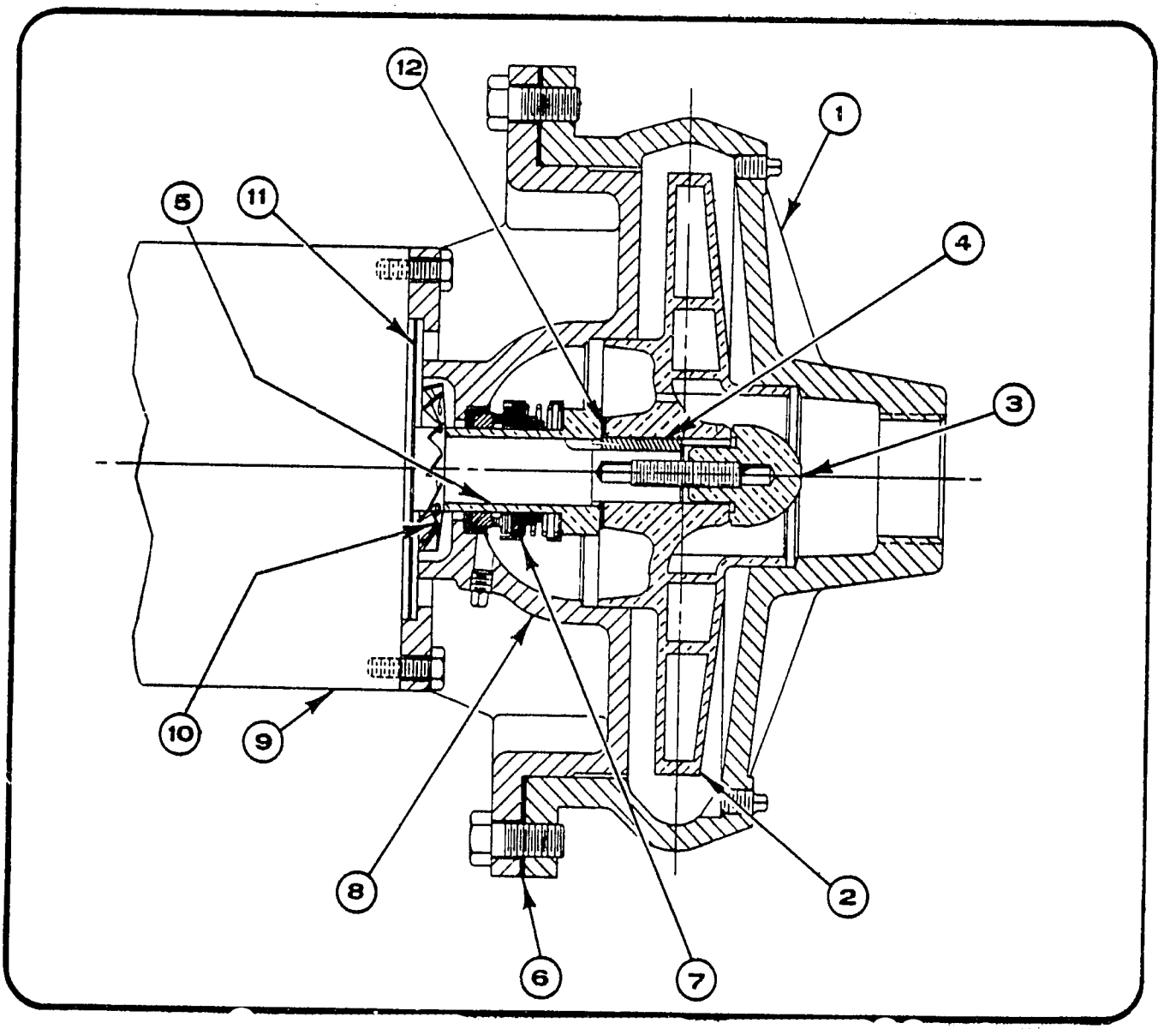

AS PUMP AND PARTS LIST SERIES A – 3 HP

PART NUMBER AND DESCRIPTION	3 HP 1" 3ϕ A9D2A	3 HP 1" 3ϕ A9C2A	3 HP 1¼" 3ϕ A9D1A	3 HP 1¼" 3ϕ A9D2A	3 HP 2" 3ϕ A9D1A	3 HP 2½" 3ϕ A9D1A
1 CASE (CAST IRON) CASE (BRONZE)	F541 D2-76	F541 D2-76	F540 D2-74	F540 D2-74	F544 D2-80	F545 D2-79
2 IMPELLER (BRONZE)	C2-3212X 5¼"	C2-3211X 6 1/16"	C2-3213X 8¼"	C2-3213X 4 7/16"	C2-3214X 7 1/16"	C2-3215X 6¾"
3 STUD & NUT ASSEMBLY	C10035 A2-3898	C10035 A2-3898	C10035 A2-3898	C10035 A2-3898	C10035 A2-3898	C10035 A2-3898
4 KEY	C7763	C7763	C7763	C7763	C7763	C7763
5 SLEEVE *	A2-3905	A2-3905	A2-3905	A2-3905	A2-3905	A2-3905
6 GASKET *	D5450	D5450	D5450	D5450	D5450	D5450
7 SHAFT SEAL *	3179	3179	3179	3179	3179	3179
8 HEAD (CAST IRON) HEAD (BRONZE)	D2-1478 D2-1480	D2-1478 D2-1480	D2-1478 D2-1480	D2-1478 D2-1480	D2-1478 D2-1480	D2-1478 D2-1480
9 MOTOR	Contact Dunham-Bush, Inc., Marshalltown, Iowa					
10 SLINGER	C10038	C10038	C10038	C10038	C10038	C10038
11 SHIELD	C8958	C8958	C8958	C8958	C8958	C8958
12 GASKET *	A2-3020	A2-3020	A2-3020	A2-3020	A2-3020	A2-3020

NOTES: 1. NON-STANDARD pump parts are not shown. When ordering repair parts, refer to page 10 of this catalog.
2. * = These parts are required when replacing shaft seal.

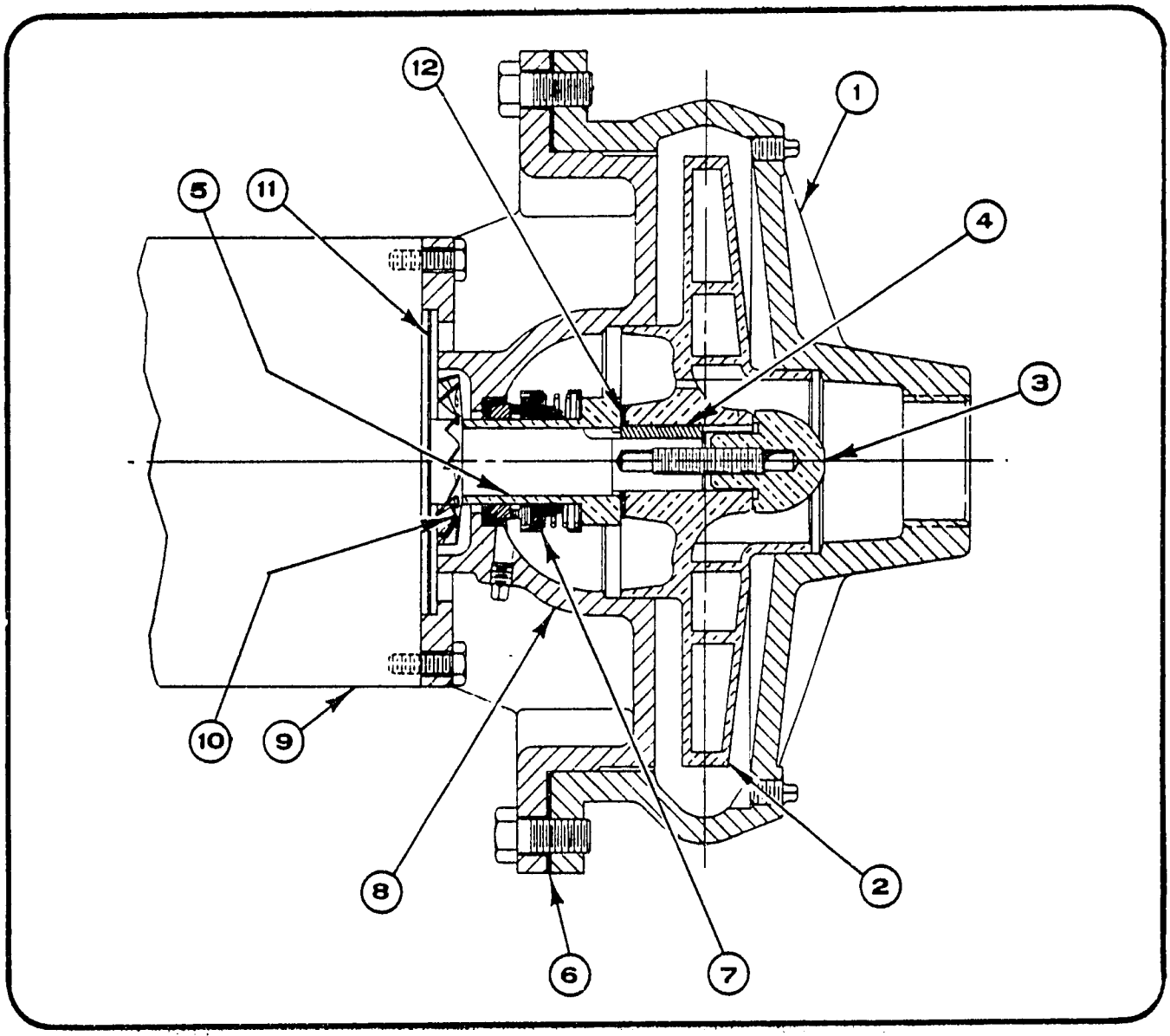

A9 PUMP AND PARTS LIST SERIES A – 5 HP

PART NUMBER AND DESCRIPTION	5 HP 1" 3ϕ A9C2A	5 HP 1" 3ϕ A9D2A	5 HP 1¼" 3ϕ A9D2A	5 HP 2" 3ϕ A9D1A	5 HP 2" 3ϕ A9D2A	5 HP 2½" 3ϕ A9D1A	5 HP 2½" 3ϕ A9D2A
1 CASE (CAST IRON) CASE (BRONZE)	F541 D2-76	F541 D2-76	F540 D2-74	F544 D2-80	F544 D2-80	F545 D2-79	F545 D2-79
2 IMPELLER (BRONZE)	C2-3211X $6^{9}/_{16}$"	C2-3212X $5^{7}/_{8}$"	C2-3213X $5^{15}/_{32}$"	C2-3214X $8^{7}/_{16}$"	C2-3214X $4^{15}/_{16}$"	C2-3215X $7^{15}/_{16}$"	C2-3215X $4^{3}/_{4}$"
3 STUD & NUT ASSEMBLY	C10035 A2-3898	C10035 A2-3898	C10035 A2-3898	C10035 A2-3899	C10035 A2-3899	C10035 A2-3899	C10035 A2-3899
4 KEY	C7763	C7763	C7763	C7763	C7763	C7763	C7763
5 SLEEVE *	A2-3905	A2-3905	A2-3905	A2-3905	A2-3905	A2-3905	A2-3905
6 GASKET *	D5450	D5450	D5450	D5450	D5450	D5450	D5450
7 SHAFT SEAL*	3179	3179	3179	3179	3179	3179	3179
8 HEAD (CAST IRON) HEAD (BRONZE)	D2-1478 D2-1480	D2-1478 D2-1480	D2-1478 D2-1480	D2-1478 D2-1480	D2-1478 D2-1480	D2-1478 D2-1480	D2-1478 D2-1480
9 MOTOR	Contact Dunham-Bush, Inc., Marshalltown, Iowa						
10 SLINGER	C10038	C10038	C10038	C10038	C10038	C10038	C10038
11 SHIELD	C8958	C8958	C8958	C8958	C8958	C8958	C8958
12 GASKET *	A2-3020	A2-3020	A2-3020	A2-3020	A2-3020	A2-3020	A2-3020

NOTES: 1. NON-STANDARD pump parts are not shown. When ordering repair parts, refer to page 10 of this catalog.
2. * = These parts are required when replacing shaft seal.

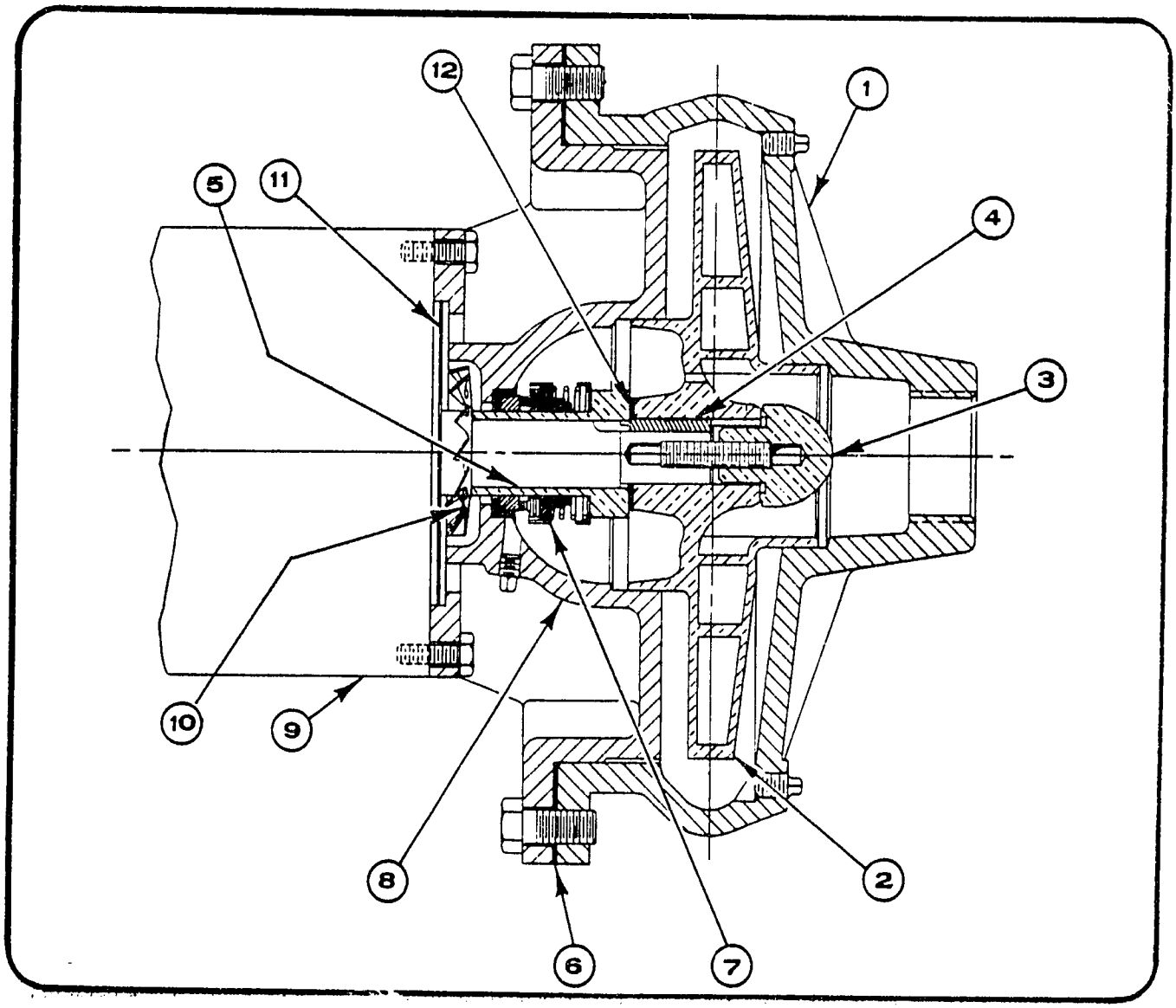

A9 PUMP AND PARTS LIST
SERIES A - 7½ HP

PART NUMBER AND DESCRIPTION		7½ HP 1¼" 3ϕ A9D2A	7½ HP 2" 3ϕ A9D2A	7½ HP 2½" 3ϕ A9D1A	7½ HP 2½" 3ϕ A9D1A
1	CASE (CAST IRON) CASE (BRONZE)	F540 D2-74	F544 D2-80	F545 D2-79	F545 D2-79
2	IMPELLER (BRONZE)	C2-3213X 5 15/16"	C2-3214X 5 9/16"	C2-3215X 9"	C2-3215X 5 5/16"
3	STUD & NUT ASSEMBLY	C10035 A2-3899	C10035 A2-3899	C10035 A2-3899	C10035 A2-3899
4	KEY	C7763	C7763	C7763	C7763
5	SLEEVE *	A2-3905	A2-3905	A2-3905	A2-3905
6	GASKET *	D5450	D5450	D5450	D5450
7	SHAFT SEAL*	3179	3179	3179	3179
8	HEAD (CAST IRON) HEAD (BRONZE)	D2-1478 D2-1480	D2-1478 D2-1480	D2-1481 D2-1483	D2-1478 D2-1480
9	MOTOR	Contact Dunham-Bush, Inc., Marshalltown, Iowa			
10	SLINGER	C1038	C1038	C1038	C1038
11	SHIELD	C8958	C8958	D5478	C8958
12	GASKET *	A2-3020	A2-3020	A2-3020	A2-3020

NOTES:
1. NON-STANDARD pump parts are not shown. When ordering repair parts, refer to page 10 of this catalog.
2. * = These parts are required when replacing shaft seal.

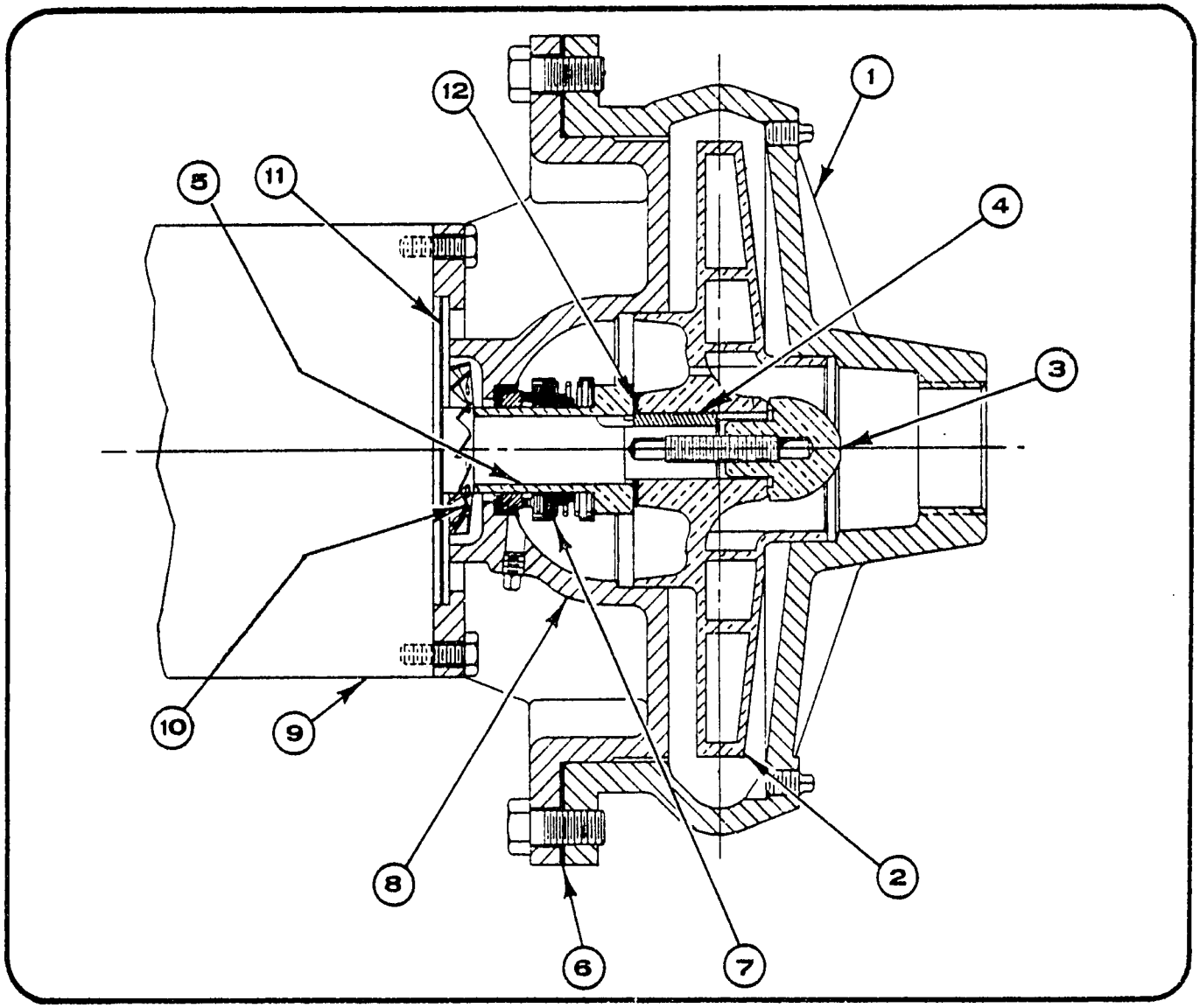

A9 PUMP AND PARTS LIST
SERIES A – 10 HP AND 15 HP

PART NUMBER AND DESCRIPTION	10 HP 1¼" 3ϕ A9D2A	10 HP 2" 3ϕ A9D2A	10 HP 2½" 3ϕ A9D2A	15 HP 2" 3ϕ A9D2A
1 CASE (CAST IRON) CASE (BRONZE)	F540 D2-74	F544 D2-80	F545 D2-79	F544 D2-80
2 IMPELLER (BRONZE)	C2-3213X 6 3/8"	C2-3214X 5 29/32"	C2-3215X 5 21/32"	C2-3214X 6 5/16"
3 STUD & NUT ASSEMBLY	C10035 A2-3899	C10035 A2-3899	C10035 A2-3899	C10035 A2-3899
4 KEY	C7763	C7763	C7763	C7763
5 SLEEVE *	A2-3905	A2-3905	A2-3905	A2-3905
6 GASKET *	D5450	D5450	D5450	D5450
7 SHAFT SEAL *	3179	3179	3179	3179
8 HEAD (CAST IRON) HEAD (BRONZE)	D2-1481 D2-1483	D2-1481 D2-1483	D2-1481 D2-1483	D2-1481 D2-1483
9 MOTOR	Contact Dunham-Bush, Inc., Marshalltown, Iowa			
10 SLINGER	C1038	C1038	C1038	C1038
11 SHIELD	D5478	D5478	D5478	D5478
12 GASKET *	A2-3020	A2-3020	A2-3020	A2-3020

NOTES:
1. NON-STANDARD pump parts are not shown. When ordering repair parts, refer to page 10 of this catalog.
2. * = These parts are required when replacing shaft seal.

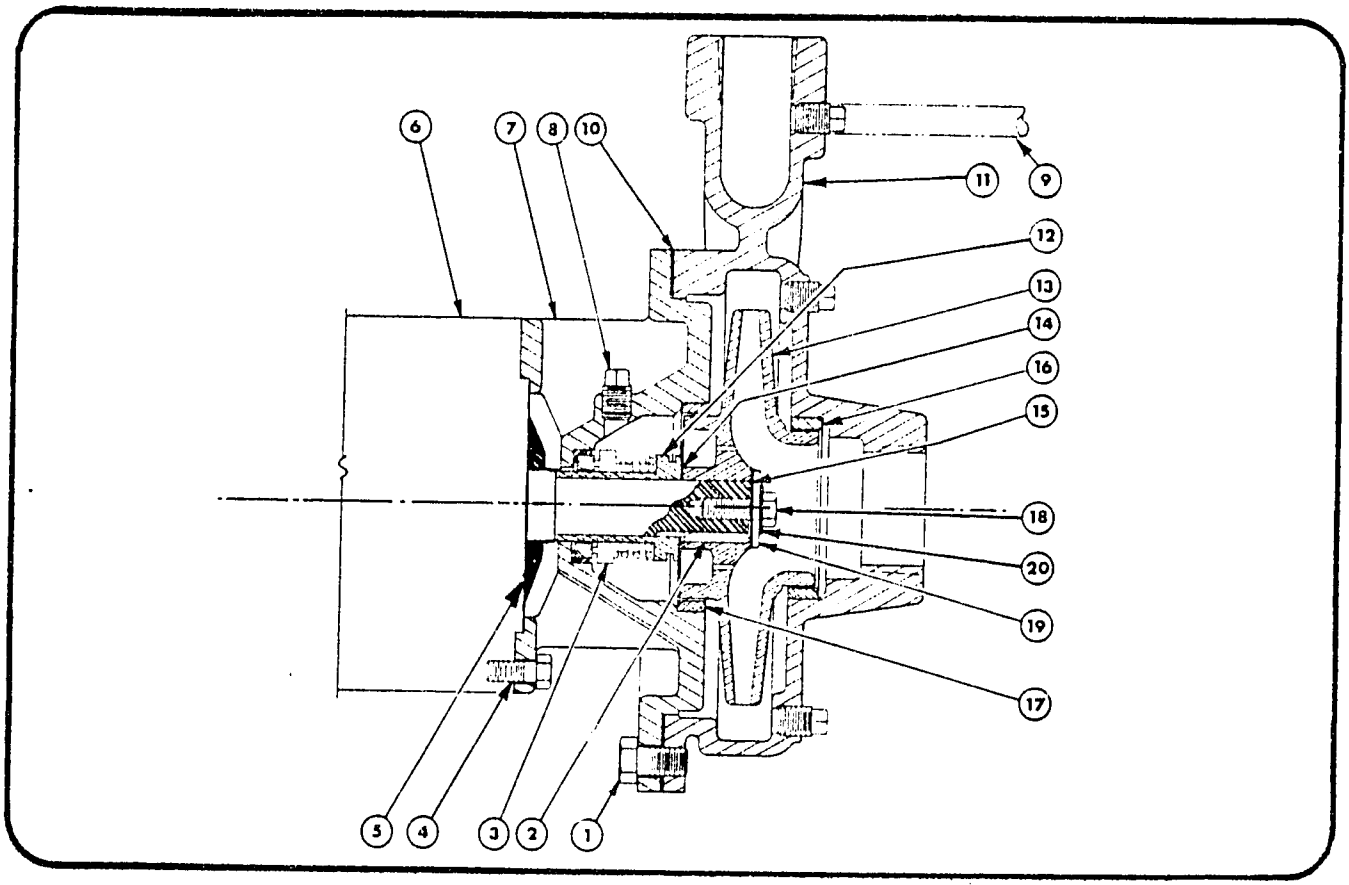

A7 PUMP AND PARTS LIST – ¾", 1¼" AND 1½" DIA. DISCHARGE

	PART NUMBER & DESCRIPTION	¾" A7B	1¼" A7B	1¼" A7C	1½" A7B	1½" A7C
1.	Screw – Cap	P - 150				
2.	Key – Impeller	Supplied with Motor				
3.	Seal – Mechanical *	3179	3179	3179	3179	3179
	Seal – 250# Optional	Contact Dunham-Bush, Inc., Marshalltown, Iowa				
4.	Screw – Cap	P-142	P-142	P-150	P-142	P-150
5.	Slinger	Supplied with Motor				
6.	Motor	Contact Dunham-Bush, Inc., Marshalltown, Iowa				
7.	Head, C.I.	C2-2336	C2-2336	C2-2337	C2-2336	C2-2337
	Head, Bronze	C2-2660	C2-2660	C2-2661	C2-2660	C2-2661
	Head, C.I. w/wear Rings	C2-2345	C2-2345	C2-2346	C2-2345	C2-2346
8.	Fitting – Compression Straight	P - 194 (Optional)				
	Fitting – Elbow, Not shown	P - 195 (Optional)				
	Plug – Pipe	(5) P - 196				
9.	Tube	Copper 1/8" OD (Optional)				
10.	Gasket – Case *	C2-2343				
11.	Case, C.I.	C2-2390	C2-2335		C2-2377	
	Case, (Bronze)	C2-2665	C2-2666		C2-2667	
	Case, C.I. w/wear Rings	C2-2389	C2-2347		C2-2376	
	Case, 250# C.I.	Not Available				
	Case, 250# Bronze	Not Available				
	Case, 250# C.I. w/wear Rings	Not Available				
12.	Sleeve *	A2-3018	A2-3018	A2-3018	A2-3018	A2-3018
	Seal – 250# Optional	Contact Dunham-Bush, Inc., Marshalltown, Iowa				
13.	Impeller	C2-2378	C2-2340	C2-2340	C2-2380	C2-2380
14.	Gasket (Impeller – Sleeve) *	A2-3020	A2-3020	A2-3020	A2-3020	A2-3020
15.	Gasket (Impeller – Head) *	A2-3022-1				
16.	Ring – Case Wear Ring	A2-3026	A2-3015		A2-3027	
17.	Ring – Head Wear Ring	A2-3016				
18.	Screw – Impeller	3312	3312	3312	3312	3312
19.	Washer – Impeller	A2-3021-1				
20.	Washer – Sealing	3313	3313	3313	3313	3313

NOTES: 1. NON-STANDARD pump parts are not shown. When ordering repair parts, refer to page 10 of this catalog.
2. * = These parts are required when replacing shaft seal.

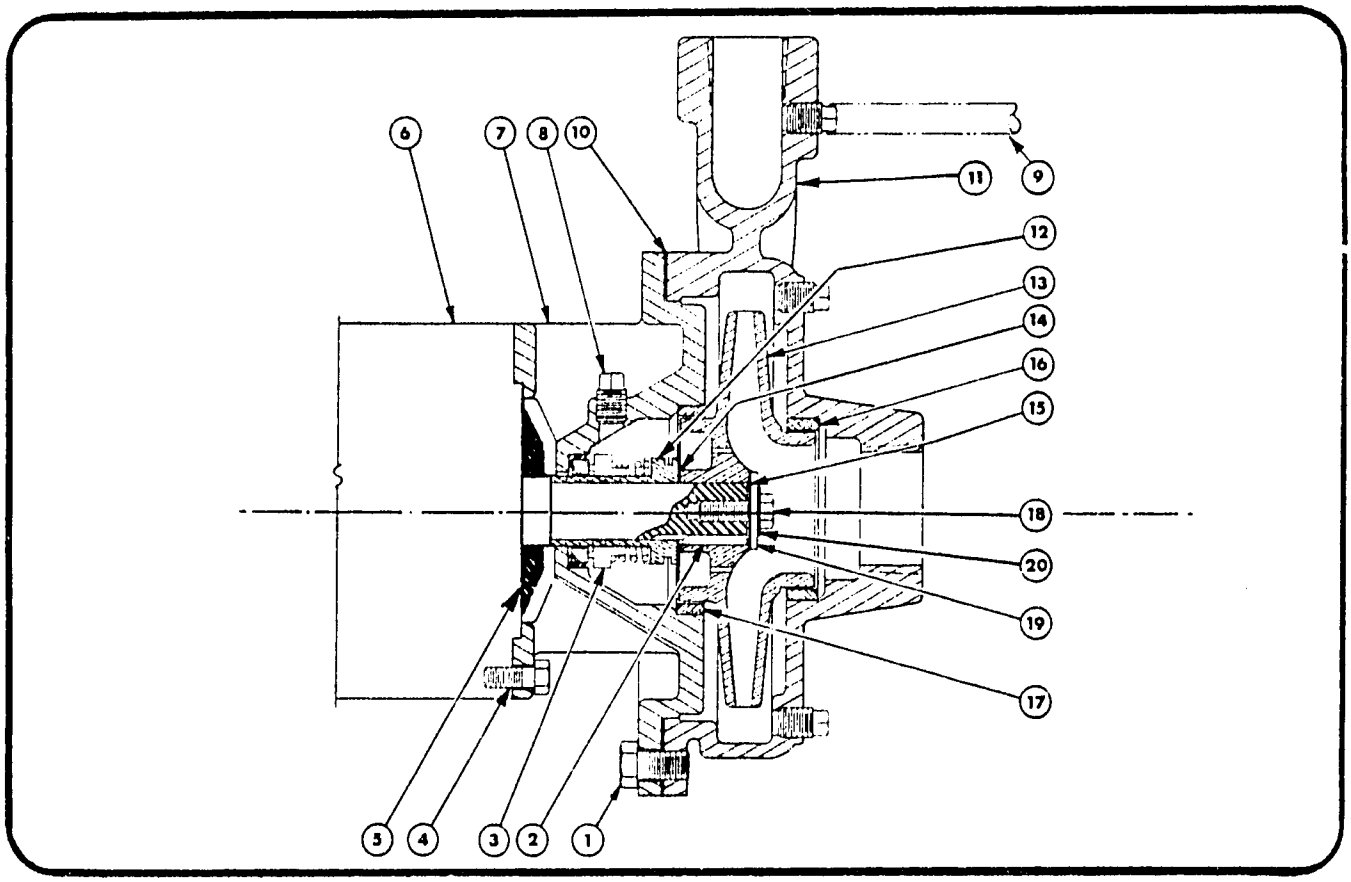

A7 PUMP AND PARTS LIST – 2" AND 2½" DIA. DISCHARGE

PART NUMBER & DESCRIPTION		2" A7D	2" A7E	2" A7F	2½" A7D	2½" A7E	2½" A7E H.C.	2½" A7F
1.	Screw – Cap	P - 150						
2.	Key – Impeller	Supplied with Motor						
3.	Seal – Mechanical *	3179	3179	3291	3179	3179	3179	3291
	Seal – 250# Optional	Contact Dunham-Bush, Inc., Marshalltown, Iowa						
4.	Screw – Cap	P - 142	P - 150	P - 150	P - 142	P - 150	P - 150	P - 150
5.	Slinger	Supplied with Motor						
6.	Motor	Contact Dunham-Bush, Inc., Marshalltown, Iowa						
7.	Head, C.I.	C2-2384	C2-2386	C2-2388	C2-2384	C2-2386	C2-2386	C2-2388
	Head, Bronze	C2-2662	C2-2663	C2-2664	C2-2662	C2-2663	C2-2663	C2-2664
	Head, C.I. w/wear rings	C2-2383	C2-2385	C2-2387	C2-2383	C2-2385	C2-2385	C2-2387
8.	Fitting – Compression Straight	P - 194 (Optional)						
	Fitting – Elbow, Not shown	P - 195 (Optional)						
	Plug – Pipe	(5) P - 196						
9.	Tube	Copper 1/8" OD (Optional)						
10.	Gasket – Case *	C2-2343						
11.	Case, C.I.	D2-1274			D2-1276			
	Case, (Bronze)	D2-1352			D2-1355			
	Case, C.I. w/wear rings	D2-1273			D2-1275			
	Case, 250# C.I.	Not Available						
	Case, 250# Bronze	Not Available						
	Case, 250# C.I. w/wear rings	Not Available						
12.	Sleeve *	A2-3018	A2-3018	A2-3025	A2-3018	A2-3018	A2-3018	A2-3025
	Seal – 250# Optional	Contact Dunham-Bush, Inc., Marshalltown, Iowa						
13.	Impeller	C2-2381	C2-2381	C2-2382	C2-2381	C2-2381	C2-2392	C2-2382
14.	Gasket (Impeller – Sleeve) *	A2-3020	A2-3020	A2-3029	A2-3020	A2-3020	A2-3020	A2-3029
15.	Gasket (Impeller – Head) *	A2-3021-1		A2-3022-2	A2-3022-1			A2-3022-2
16.	Ring – Case Wear Ring	A2-3028						
17.	Ring – Head Wear Ring	A2-3016						
18.	Screw – Impeller	3312	3312	3292	3312	3312	3312	3292
19.	Washer – Impeller	A2-3021-1		A2-3021-2	A2-3021-1			A2-3021-2
20.	Washer – Sealing	3313	3313	3293	3313	3313	3313	3293

NOTES: 1. NON-STANDARD pump parts are not shown. When ordering repair parts, refer to page 10 of this catalog.
2. * = These parts are required when replacing shaft seal.

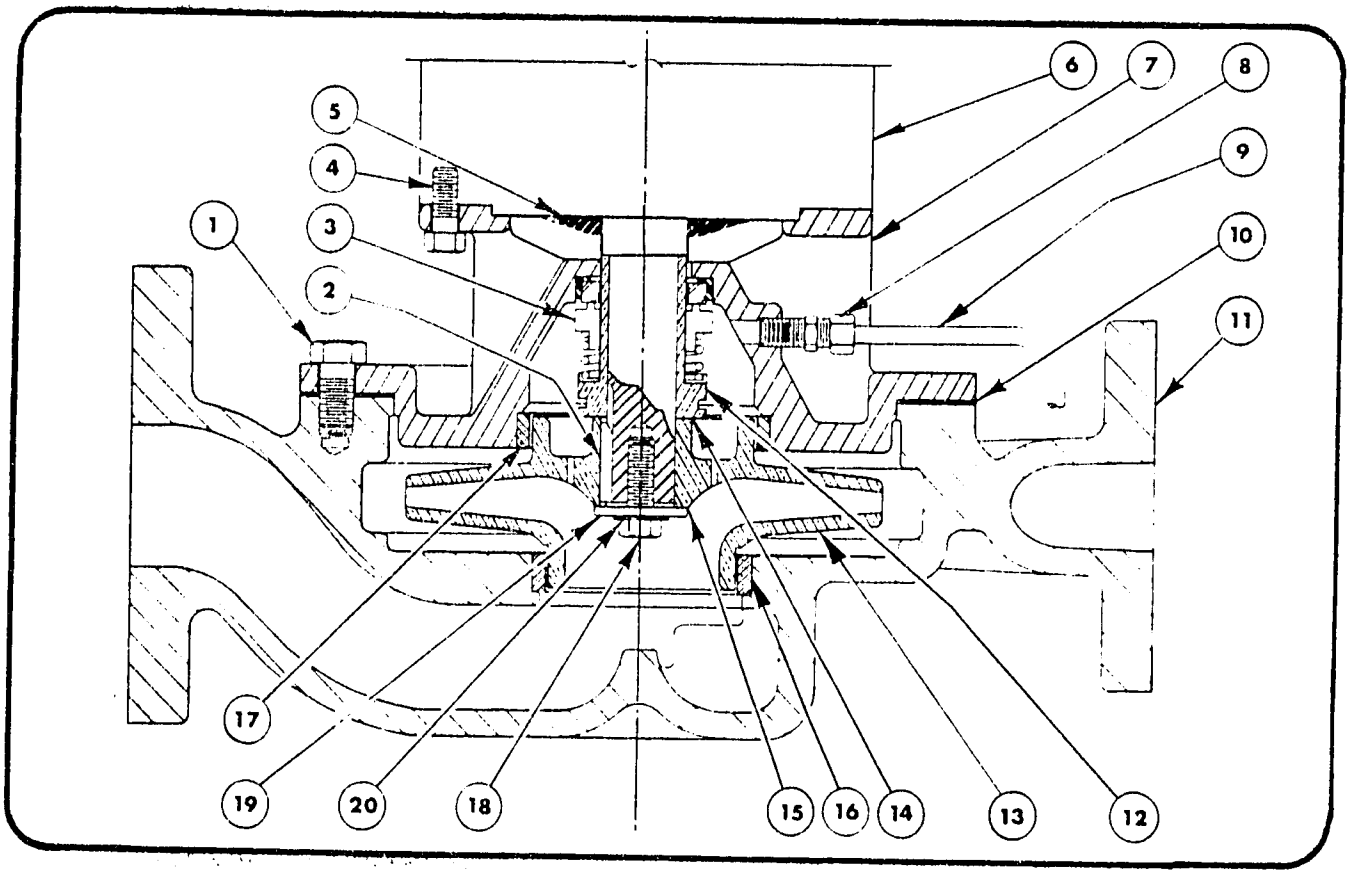

PM7 PUMP AND PARTS LIST – 1", 1¼" AND 1½" DIA. DISCHARGE

PART NUMBER & DESCRIPTION		1" PM7B	1¼" PM7B	1¼" PM7C	1½" PM7B	1½" PM7C
1.	Screw - Cap	P - 150				
2.	Key - Impeller	Supplied with Motor				
3.	Seal - Mechanical *	3179	3179	3179	3179	3179
	Seal 250# Optional	Contact Dunham-Bush, Inc. – Marshalltown, Iowa				
4.	Screw - Cap	P - 142	P - 142	P - 150	P - 142	P - 150
5.	Slinger	Supplied with Motor				
6.	Motor	Contact Dunham-Bush, Inc. – Marshalltown, Iowa				
7.	Head, C.I.	C2-2336	C2-2336	C2-2337	C2-2336	C2-2337
	Head, (Bronze)	C2-2660	C2-2660	C2-2661	C2-2660	C2-2661
	Head, C.I. w/wear rings	C2-2345	C2-2345	C2-2346	C2-2345	C2-2346
8.	Fitting - Compression Straight	P-194				
	Fitting - Elbow – Not shown	P-195				
	Plug - Pipe	(1) P-196				
9.	Tube	Copper 1/8" OD				
10.	Gasket - Case *	C2-2343				
11.	Case, C.I.	D2-1268	D2-1256	D2-1256	D2-1266	D2-1266
	Case, (Bronze)	D2-1346	D2-1348	D2-1348	D2-1350	D2-1350
	Case, C.I. w/wear rings	D2-1267	D2-1255	D2-1255	D2-1265	D2-1265
	Case, 250# C.I.	D2-1299	D2-1301	D2-1301	D2-1303	D2-1303
	Case, 250# Bronze	D2-1347	D2-1349	D2-1349	D2-1351	D2-1351
	Case, 250# C.I. w/wear rings	D2-1300	D2-1302	D2-1302	D2-1304	D2-1304
12.	Sleeve *	A2-3018	A2-3018	A2-3018	A2-3018	A2-3018
	Seal 250# Optional	Contact Dunham-Bush, Inc. – Marshalltown, Iowa				
13.	Impeller	C2-2379	C2-2340	C2-2340	C2-2380	C2-2380
14.	Gasket (Impeller - Sleeve) *	A2-3020	A2-3020	A2-3020	A2-3020	A2-3020
15.	Gasket (Impeller - Head) *	A2-3022-1				
16.	Ring - Case Wear Ring	A2-3026	A2-3015	A2-3015	A2-3027	A2-3027
17.	Ring - Head Wear Ring	A2-3016				
18.	Screw - Impeller	3312				
19.	Washer - Impeller	A2-3021-1				
20.	Washer - Sealing	3313				

NOTES: 1. NON-STANDARD pump parts are not shown. When ordering repair parts, refer to page 10 of this catalog.
2. * = These parts are required when replacing shaft seal.

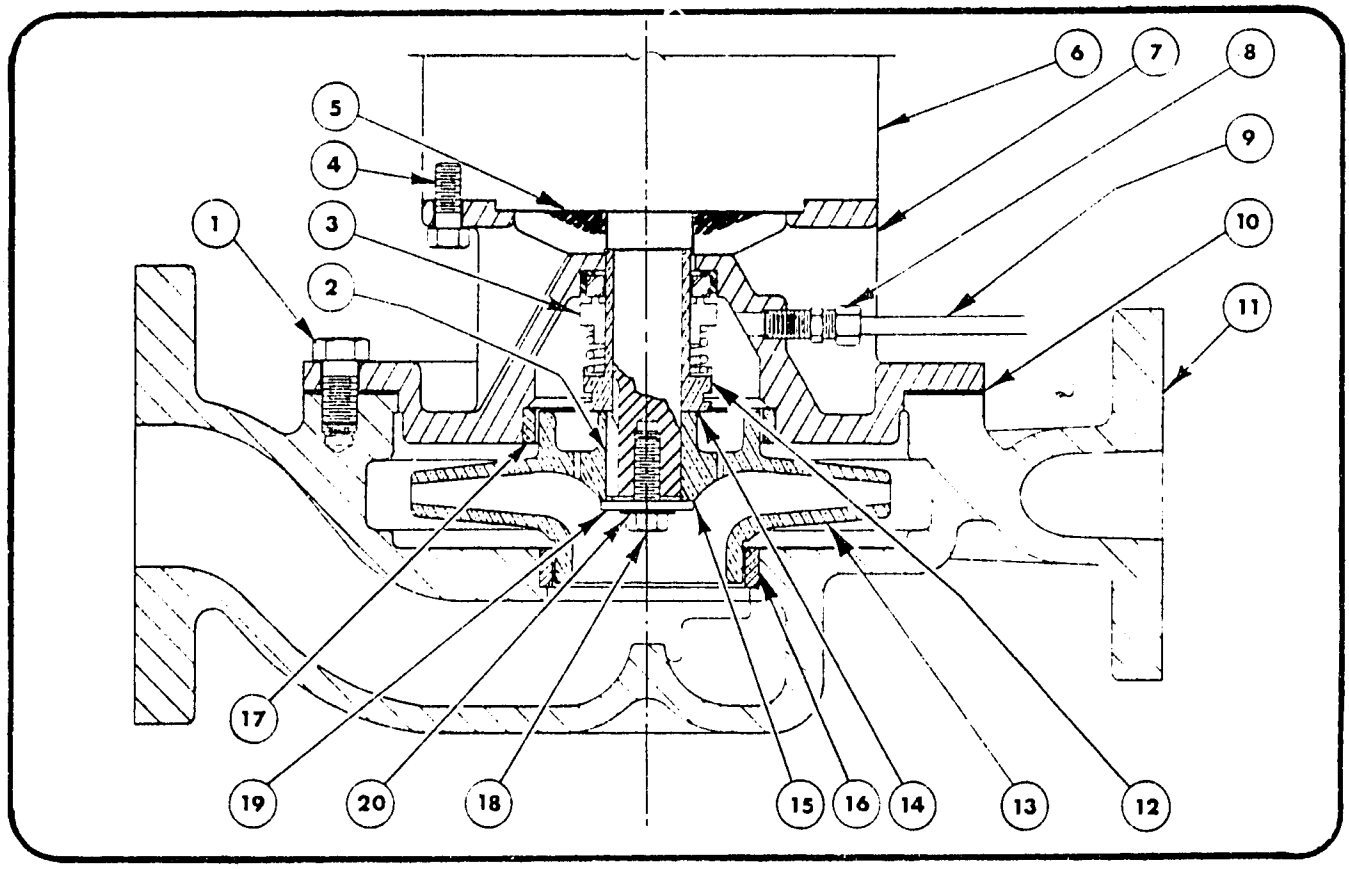

PM7 PUMP AND PARTS LIST – 2" AND 2½" DIA. DISCHARGE

PART NUMBER & DESCRIPTION		2" PM7D	2" PM7E	2" PM7F	2½" PM7D	2½" PM7E	2½" PM7E H.C.	2½" PM7F
1.	Screw - Cap	P - 150						
2.	Key - Impeller	Supplied with Motor						
3.	Seal - Mechanical *	3179	3179	3291	3179	3179	3179	3291
	Seal 250# Optional	Contact Dunham-Bush, Inc. – Marshalltown, Iowa						
4.	Screw - Cap	P - 142	P - 150	P - 150	P - 142	P -150	P - 150	P -150
5.	Slinger	Supplied with Motor						
6.	Motor	Contact Dunham-Bush, Inc. – Marshalltown, Iowa						
7.	Head, C.I.	C2-2384	C2-2386	C2-2388	C2-2384	C2-2386	C2-2386	C2-2388
	Head, (Bronze)	C2-2662	C2-2663	C2-2664	C2-2662	C2-2663	C2-2663	C2-2664
	Head, C.I. w/wear rings	C2-2383	C2-2385	C2-2387	C2-2383	C2-2385	C2-2385	C2-2387
8.	Fitting - Compression Straight	P-194						
	Fitting - Elbow – Not Shown	P-195						
	Plug - Pipe	(1) P-196						
9.	Tube	Copper 1/8" OD						
10.	Gasket - Case *	C2-2343						
11.	Case, C.I.	D2-1270			D2-1272			
	Case, (Bronze)	D2-1269			D2-1356			
	Case, C.I. w/wear rings	D2-1353			D2-1271			
	Case, 250# C.I.	D2-1305			D2-1307			
	Case, 250# Bronze	D2-1354			D2-1357			
	Case, 250# C.I. w/wear rings	D2-1306			D2-1308			
12.	Sleeve *	A2-3018	A2-3018	A2-3025	A2-3018	A2-3018	A2-3018	A2-3025
	Seal 250# Optional	Contact Dunham-Bush, Inc. – Marshalltown, Iowa						
13.	Impeller	C2-2381	C2-2381	C2-2382	C2-2381	C2-2381	C2-2392	C2-2382
14.	Gasket (Impeller - Sleeve) *	A2-3020	A2-3020	A2-3029	A2-3020	A2-3020	A2-3020	A2-3029
15.	Gasket (Impeller - Head)	A2-3022-1		A2-3022-2	A2-3022-1			A2-3022-2
16.	Ring - Case Wear Ring	A2-3028						
17.	Ring - Head Wear Ring	A2-3016						
18.	Screw - Impeller	3312		3292	3312			3292
19.	Washer - Impeller	A2-3021-1		A2-3021-2	A2-3021-1			A2-3021-2
20.	Washer - Sealing	3313		3293	3313			3293

NOTES: 1. NON-STANDARD pump parts are not shown. When ordering repair parts, refer to page 10 of this catalog.
2. * = These parts are required when replacing shaft seal.

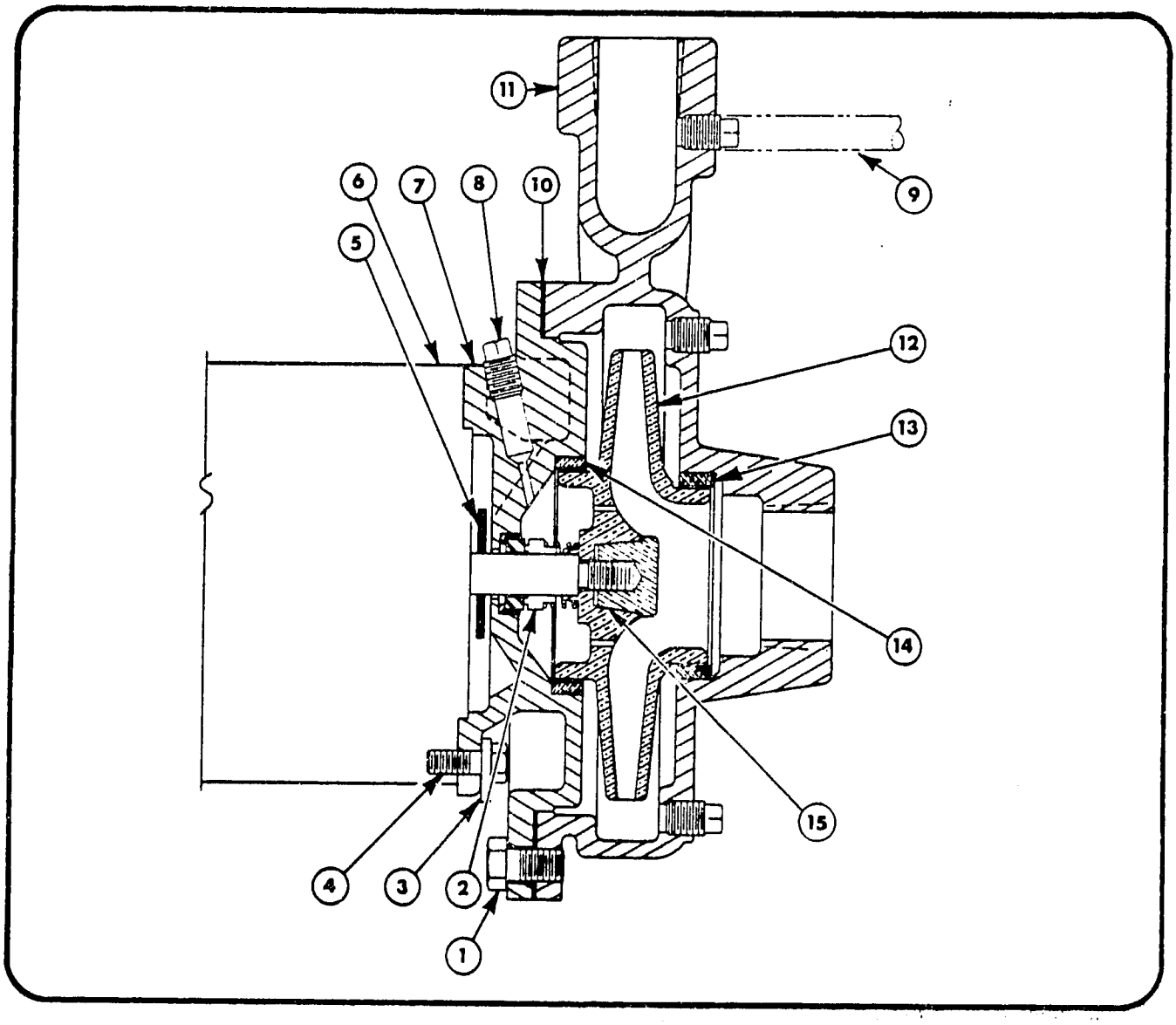

A7A PUMP AND PARTS LIST– ¾", 1¼" AND 1½" DIA. DISCHARGE

	PART NUMBER & DESCRIPTION	¾" A7A	1¼" A7A	1½" A7A
1.	Screw–Cap	P - 150	P - 150	P - 150
2.	Seal–Mechanical *	472	472	472
3.	Retainer–Head	A2-3023	A2-3023	A2-3023
4.	Screw–Cap	P - 142	P - 142	P - 142
5.	Slinger	C8854	C8854	C8854
6.	Motor	Contact Dunham-Bush, Inc. Marshalltown, Iowa		
7.	Head, C.I.	C2-2342	C2-2342	C2-2342
	Head, Bronze	C2-2659	C2-2659	C2-2659
	Head, C.I. w/wear rings	C2-2344	C2-2344	C2-2344
8.	Fitting – Compression Straight	P - 194 (Optional)		
	Fitting – Elbow (Not Shown)	P - 195 (Optional)		
	Plug–Pipe	(5) P - 196		
9.	Tube	Copper 1/8" OD (Optional)		
10.	Gasket–Case *	C2-2343	C2-2343	C2-2343
11.	Case, C.I.	C2-2390	C2-2335	C2-2377
	Case, Bronze	C2-2665	C2-2666	C2-2667
	Case, C.I. w/wear rings	C2-2389	C2-2347	C2-2376
12.	Impeller	C2-2378	C2-2339	C2-2498
13.	Ring – Case Wear Ring	A2-3026	A2-3015	A2-3027
14.	Ring – Head Wear Ring	A2-3016	A2-3016	A2-3016
15.	Screw–Impeller	A2-3691	A2-3691	A2-3691

NOTES: 1. NON-STANDARD pump parts are not shown. When ordering repair parts, refer to page 10 of this catalog.
2. * = These parts are required when replacing shaft seal.

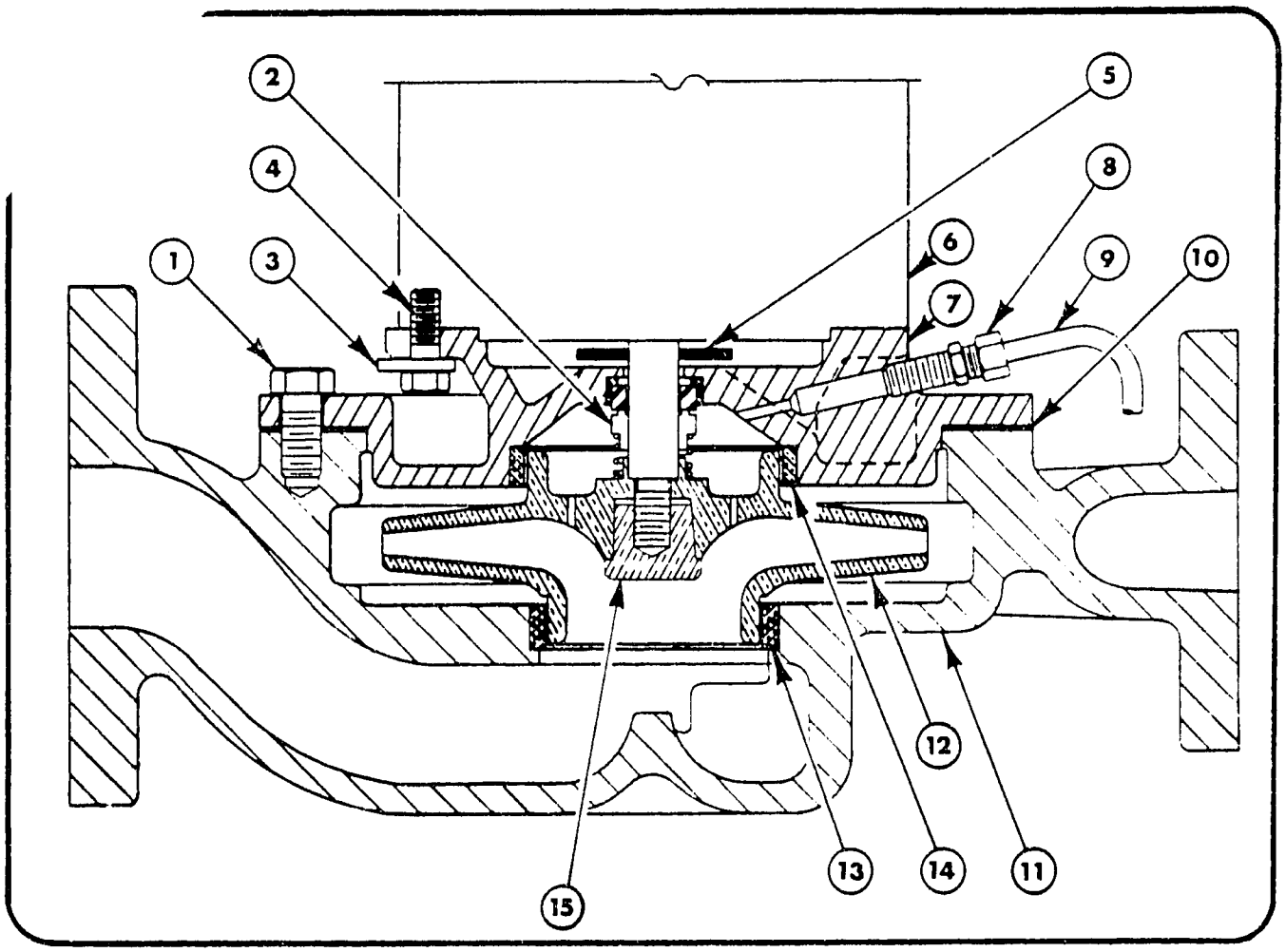

PM7A PUMP AND PARTS LIST
1", 1¼" AND 1½" DIA. DISCHARGE

PART NUMBER & DESCRIPTION		1" PM7A	1¼" PM7A	1½" PM7A
1.	Screw—Cap	P - 150	P - 150	P - 150
2.	Seal—Mechanical *	472	472	472
3.	Retainer—Head	A2-3023	A2-3023	A2-3023
4.	Screw—Cap	P - 142	P - 142	P - 142
5.	Slinger	C8854	C8854	C8854
6.	Motor	Contact Dunham-Bush, Inc., Marshalltown, Iowa		
7.	Head, C.I.	C2-2342	C2-2342	C2-2342
	Head, Bronze	C2-2659	C2-2659	C2-2659
	Head, C.I. w/wear rings	C2-2344	C2-2344	C2-2344
8.	Fitting—Compression Straight	P - 194		
	Fitting—Elbow (Not Shown)	P - 195		
	Plug—Pipe	(1) P - 196		
9.	Tube	Copper 1/8" OD		
10.	Gasket—Case *	C2-2343	C2-2343	C2-2343
11.	Case, C.I.	D2-1268	D2-1256	D2-1266
	Case, Bronze	D2-1346	D2-1348	D2-1350
	Case, C.I. w/wear rings	D2-1267	D2-1255	D2-1265
	Case, 250# C.I.	D2-1299	D2-1301	D2-1303
	Case, 250# Bronze	D2-1347	D2-1349	D2-1351
	Case, 250# C.I. w/wear rings	D2-1300	D2-1302	D2-1304
12.	Impeller	C2-2378	C2-2339	C2-2498
13.	Ring—Case Wear Ring	A2-3026	A2-3015	A2-3027
14.	Ring—Head Wear Ring	A2-3016	A2-3016	A2-3016
15.	Nut—Impeller	A2-3691	A2-3691	A2-3691

NOTES: 1. NON-STANDARD pump parts are not shown. When ordering repair parts, refer to page 10 of this catalog.
2. * = These parts are required when replacing shaft seal.

859

DUNHAM-BUSH

AIR CONDITIONING, REFRIGERATION, HEATING PRODUCTS AND ACCESSORIES

MAIN OFFICES

175 SOUTH STREET WEST HARTFORD, CONNECTICUT 06110

FACTORIES

WEST HARTFORD DIVISION
179 South Street
West Hartford, Connecticut
06110

HARRISONBURG DIVISION
101 Burgess Road
Harrisonburg, Virginia
22801

MARSHALLTOWN DIVISION
811 East Main Street
Marshalltown, Iowa
50158

RIVERSIDE DIVISION
1850 Massachusetts Ave.
Riverside, California
92507

SUBSIDIARIES

DUNHAM-BUSH of Canada Limited
140 Wendell Avenue
Weston, Ontario

DUNHAM-BUSH, LTD.
Fitzherbert Road, Farlington
Portsmouth, Hampshire, England

DUNHAM-BUSH INTERNATIONAL: 175 South Street, West Hartford, Connecticut 06110, U.S.A.
CABLE: DUNBUSH or TELEX: 994469

SALES OFFICES

ALABAMA
Birmingham
Mobile

ARIZONA
Phoenix

ARKANSAS
Little Rock

CALIFORNIA
Arcadia
Los Angeles
Sacramento
San Diego
San Francisco

COLORADO
Denver

CONNECTICUT
Hartford
Bloomfield

FLORIDA
Clearwater
Jacksonville
Miami
Orlando

GEORGIA
Atlanta

HAWAII
Honolulu

ILLINOIS
Chicago
Peoria
Rockford

INDIANA
Indianapolis
Michigan City

IOWA
Des Moines

KANSAS
Lenexa

KENTUCKY
Louisville

LOUISIANA
New Orleans
Shreveport

MAINE
Lewiston

MARYLAND
Baltimore
Silver Spring

MASSACHUSETTS
Boston
Springfield

MICHIGAN
Detroit
Grand Rapids
Kalamazoo

MINNESOTA
Minneapolis

MISSISSIPPI
Jackson

MISSOURI
Kansas City
St. Louis

MONTANA
Billings
Great Falls

NEBRASKA
Omaha

NEW JERSEY
Hazlet
Little Falls
Union

NEW MEXICO
Albuquerque

NEW YORK
Albany
Buffalo
New York City
Rochester
Syracuse

NORTH CAROLINA
Charlotte
Greensboro

OHIO
Akron
Cincinnati
Cleveland
Columbus
Dayton
Delaware
Toledo

OKLAHOMA
Oklahoma City
Tulsa

OREGON
Portland

PENNSYLVANIA
Harrisburg
Philadelphia
Pittsburgh
Pittston

PUERTO RICO
Caparra Heights

RHODE ISLAND
Providence

TENNESSEE
Memphis
Knoxville
Nashville

TEXAS
Dallas
El Paso
Houston
Lubbock
San Antonio

UTAH
Salt Lake City

VIRGINIA
Alexandria
Harrisonburg
Richmond
Virginia Beach

WASHINGTON
Seattle
Spokane

WEST VIRGINIA
Barboursville

WISCONSIN
Milwaukee

REPRESENTED BY:

DUNHAM-BUSH, INC. • Marshalltown, Iowa 50158, U.S.A.

3440B-5M-1079B-281B

one of The Signal Companies

CONTRACT NO. AID/OTR-C-1629
PIO/T NO. 263-026-3-90315
WBEC PROJECT NO. 4631
PROCUREMENT AND TECHNICAL REVIEW
FOR USAID CAIRO, EGYPT

This report section pertains to the following project:

Importer:	Mahmoud Abd El Fatah El Metenawy and Co.
Order No:	EA 10085
L/C Bank:	Bank of America
U.S. Bank L/C No:	620995
L/C Amount:	$68,430.00
DIB L/C No.:	20064
SER/COM:	#6

EQUIPMENT IDENTIFICATION

The equipment and spare parts lists from the suppliers final invoice and the equipment list from the contractor's on-site inspection are itemized in tabular form.

Consistency of the two parts lists may be easily established. This form also indicates compliance with the proforma invoice, contract and bank appraisal report.

Equipment details, such as catalog and serial numbers are shown on the contractor's on-site Equipment Identification form following the Equipment and Spare Parts Lists.

862

EQUIPMENT LIST

CONTRACTOR ON-SITE INSPECTION	No date invoiced DUNHAM-BUSH INVOICE # 10085	DOCUMENT VERIFICATION		
		PROFORMA INVOICE	CONTRACT LOCAL	D.I.B. APPR. REPORT
(1) Pkg. Chiller w/screw compressor Model No. PCX 120-05Q (1) Control Panel	(1) Pkg. Chiller w/3 compressors Ref: Proforma dated 12/4/77	Dated 12/4/77. (1) Pkg. Chiller w/3 Compressors Model No. IPWM-120 (2) Pumps Model No. A9D655-2	No day or month 1977 (1) Pkg. Chiller	(1) Pkg. Chiller Model IPWM-120 (2) Pumps Model A9D65S-2
		REV. # 1 dated 12/4/77 Deletes (2) Pumps		
		REV. # 2 dated 12/4/77 Changes Chiller to Model PCX-120 w/screw compressor and (2) pumps		

SPARE PARTS LIST

CONTACTOR ON-SITE INSPECTION	No date invoiced DUNHAM-BUSH INVOICE # 10085	COMMENTS
No spare parts on-site	No spare parts listed on invoice	No spare parts listed on Proforma No spare parts listed in contract

SER/COM # 6

DATE 1/29/81

IMPORTER: Mahmound Abd El Fatah
DBA El Metenawy & Co.

DIB L/C# 20064

LOCATION: El Badrashine Giza

U.S. L/C 620995

SERVICE: Ice Plant

AMOUNT USD $68,430.00

EQUIPMENT IDENTIFICATION

TYPE Chiller	MODEL PCX 120-05Q 380V/3/50Hz Cont. V. 115	SERIAL	DPW1610F79X2834B
Compressor	1610DLFiLOD		79G-049D
Compressor Motor	(FR.) 365TS 100 H.P. 2945 R.P.M.		IMA486802-G1-QE
Condenser	X2834X08	Natl. Bd.	55032
Oil Reservoir	X2834X19 built '79	Natl. Bd.	55034
Evaporator	X284X10	Natl. Bd.	55033

STATUS: Operational

REMARKS: Refrigerant charge is 315# of R-22.

Brine Pumps not received.

EQUIPMENT VALUE

Equipment value will be considered in two parts. PART #1 will determine if the net sale value of the equipment as indicated by Mr. Matava and Mr. Stillson of Dunham-Bush appear to reflect reasonable pricing. Pricing consistency with competitive pricing quotations will also be considered. PART #2 will determine if the net sale price established in PART #1 is consistent with the final invoice. As stated by AID funding regulations the final invoice amount must reflect reasonable pricing.

PART #1

Competitive quotations were not obtainable on this specific project from the Egyptian Bank, D.I.B. Therefore, the contractor does not have specific competitive pricing information available on this project for evaluation. It is strongly recommended that competitive bids be obtained prior to issuing a letter of credit and kept on file by the lending institution. However, based on previous project experience the "NET SALE PRICE" indicated by Mr. Matava and Mr. Stillson appear to be reasonable.

As stated in the equipment identification section, only one piece of Dunham-Bush equipment (PCX-120 Pkg. Chiller) was installed under this letter of credit.

The sale value of the chiller is referenced in three project documents:

Dunham-Bush Sales Order No. EA 10085 (1-9-79)	$31,048.00
Coolair Cost Breakdown letter to Dunham-Bush International (1-2-79)	$32,270.00
Interview Report from Mr. Matava and Mr. Stillson of Dunham-Bush International	$31,048.00

With the consistency of the above documentation and the previous project experience of the contractor the conclusion has been made that $31,048.00 does appear to reflect a reasonable market value for the installed chiller F.O.B. Factory.

It should be noted that the above referenced letter from Coolair to Dunham-Bush dated 1-2-79 also itemizes two (2) condensing units, two (2) evaporative cooling coils and three (3) pumps with bases. Pumps are referenced in the D.I.B. report and proforma invoice. However, none were found on the job-site, none were delivered according to the importer and none were itemized on the final invoice. Therefore, no equipment other than the chiller will be considered in this value appraisal.

PART #2

Consistency between the Invoice Amount and the "NET SALE VALUE" was established as follows:

Dunham-Bush Invoice No. EA 10085 (no date)	$68,430.00
Less "NET SALE VALUE" of installed equipment	(31,048.00)
	$37,382.00

Therefore, $37,382.00 was retained for packaging, freight, insurance and additional profit. This dollar amount represents a mark-up of 120% of the "NET SALE VALUE". A mark-up of this magnitude appears to be a violation of the "Price Provisions" regulation for the use of AID funds. The regulation states, "No funds made available under this Act shall be used for the purchase in bulk of any commodities at prices higher than the market price prevailing in the United States at the time of purchase, adjusted for differences in the cost of transportation to destination, quality, and terms of payment".

It should also be noted that documentation supplied from Dunham-Bush (Sillcox Order #9914-CE) indicated freon, air conditioning tools and accessories totaling $9,562.13 were bought by C.A.C. Corporation for this project (Metanawy Refrigeration).

These items were not found on the job site location nor were they delivered to the job site according to the project importer. Quantities of the items listed on the Sillcox invoice are in excess of the requirements for one facility of this size. If these items were purchased for this project the necessity, present location and quantity of these items should be explained by C.A.C. Corporation.

EQUIPMENT CAPABILITY

The expected equipment performance capability is stated by two project documents: the Bank's Appraisal Report (D.I.B.) and by the Project Contract.

> D.I.B. APPRAISAL REPORT - The Development Industrial Bank's appraisal states that the anticipated ice plant production is to be 25 tons of ice daily which is equivalent to 1000 blocks each of which weights 25 kilograms.
>
> PROJECT CONTRACT - The contract dated 1977 (no month or day) states, "To provide and install an ice factory, production capacity; one thousand ice slabs daily".

The importer stated to the contractor that he anticipated a daily production of 1000 slabs of ice per day. As outlined above, this expected performance is identical to that listed in the project documents. However, the importer also stated that the actual daily ice production was only 600 blocks.

The contractor agrees that C.A.C. Corporation should indeed take the necessary steps to increase production for an additional 400 blocks per day. However, the purpose of this report section is to establish if additional major equipment purchases are required to deliver the expected capacity. The reported production is 60% of that expected and the contractor feels that production could be increased by field modifications, such as improved brine circulation and an improved condenser water system. The present condenser water comes directly from a well without water treatment. This system for condenser water will cause rapid fouling of the condenser and will result in decreased machine capacity as well as high maintenance costs for condenser cleaning or tube replacement.

To summarize, field modification is required to increase production by 400 blocks of ice per day. However, the need for purchase of additional major equipment such as a new or larger chiller may not be required.

SERVICE AND MAINTENANCE

As stated in the introduction both parts and labor are necessary for equipment operation and future maintenance.

PARTS - Parts will be considered by two classifications. Major system components and maintenance or operational parts and supplies.

**System Components such as rings, shafts or compressor components are not included with this project. All parts itemized for this project are maintenance parts or supplies (see next paragraph). Considering that service labor to perform a major overhaul would come

869

from the United States, the contractor agrees that no parts of this type need to be inventoried at the job site.

**Maintenance parts and supplies consist of parts that are used in the normal operation of equipment. Obviously the quantity and type of parts to keep at the job site depends on the availability of parts from a local source. A list of maintenance parts has been developed by the operating engineer for this project, Mr. Salah Botros, and is attached at the end of this section as Exhibit G-8. Mr. Salah Botros is a former employee of the local Dunham-Bush agent and should have knowledge of the parts supply available in Cairo. A second list of recommended spare parts was prepared by the Dunham-Bush home office in Hartford, Connecticut. Items on the factory recommended spare parts lists are found in Exhibit G-1 and are preceded by an asterisk.

Many items are duplicated on both lists. However, the list prepared by the operating engineer is considerably more extensive than the factory list. Final spare parts selection must be based on an economic decision considering factors such as probability of part failure vs. downtime expense to the importer. For this reason the following spare parts price lists are included:

PCX/DBX Consolidated Parts Price List	Exhibit G-3
PCX/DBX Hermatic Oil Pump Parts Price List	Exhibit G-4
Centrifugal Pump Repair Parts Price List	Exhibit G-5

The contractor feels that the shorter list presented in Exhibit G-1 will provide reasonable insurance against excessive downtime repairs. However, if the importer

870

feels that downtime is critical enough to justify the expense of the parts list in Exhibit G-8 the contractor would also recommend consideration be given to purchase of a second chiller for stand-by use.

LABOR - Labor may also be considered by the same two classifications as parts, major system component labor and maintenance labor.

**Service work for major overhauls or replacement of major system components was not found to be available locally. According to the regional sales office for Dunham-Bush, in Athens, start-up and major systems repair labor would be supplied from the United States.

**Maintenance or operational labor must be supplied locally. The contractor recommends that this work be performed by a qualified service agent or individual familiar with Dunham-Bush equipment, such as Mr. Salah Botros, who is presently maintaining the equipment. The initial step toward proper operation and maintenance is obtaining and following the manufacturer's O & M manuals. The appropriate IPCX chiller and pump operating and maintenance manuals (Exhibit G-6 & G-7) are included at the conclusion of this report section.

SER/COM # 6 (Metenawy)
DUNHAM-BUSH LITERATURE
EXHIBIT INDEX

EQUIPMENT	REPLACEMENT PARTS LIST	PARTS PRICES	OPERATIONAL & MAINTENANCE MANUALS	RECOMMENDED SPARE PARTS LIST	ALTERNATE SPARE PARTS LIST	
Model PCX-120 Pkg. Chiller	G-1	G-3 G-4	G-6	G-1	G-8	
Pumps NOTE: None were delivered to job site	G-2	G-5	G-7			

872

Exhibit G-1

DESCRIPTION	D/B PART NO. STANDARD	D/B PART NO. ALTERNATE	QTY
380/3/50 50HZ -1-50			
CONTROL BOX	X2834X20		
* CONTROL CIRCUIT BREAKER (1CB)	BKR 75		1
* OIL HTR CIRCUIT BREAKER (2CB)	BKR 74		1
* MASTER CONTROL RELAY (1CR)	RLY 133		1
* TRANSFER RELAY (2CR)	RLY 134		1
LOCK IN RELAY (4CR)	RLY 133		1
* TIMER - SEAL OIL TEMP T'STAT (12 TR)	TMR 135		1
* ANTI-RECYCLE TIMER (1TR)	TMR 114		1
* OIL PRESS. FAILURE TIMER (2TR)	050800A1	*	1
* OIL PUMP SHUT-DOWN TIMER (3TR)	TMR 105		1
* START-UP TIME DELAY TIMER (4TR)	TMR 105		1
ELAPSED TIME INDICATOR (6TR)	TMR 86		1
HI/LO PRESS. CONTROL (1PS)	CNT 175		1
LOW SUCTION PRESSURE PUMP-DOWN AND UNLOAD CONTROL (2PS)	CNT 167		1
OIL FAILURE CONTROL (3PS)	SWT 80		1
* TEMPERATURE LOAD CONTROL (TLC)	CNT 232		1
COMPRESSOR CONTROL RELAY (3CR)	RLY 134		1
CHILLED WATER THERMOSTAT (2 TAS)	CNT 55		1
* TEMPERATURE CONTROL (13 TAS, 12TAS, 8TAS, 5TAS)	CNT 231	*	4
ON/OFF SWITCH WITH LIGHT (RED) (1SS)	SWT 83		1
LAMP (RED, SAFETY SWITCHES, OIL FAILURE) (2LT, 3LT)	LMP 15		2
LAMP (AMBER, ANTI-RECYCLE TIMER, START UP DELAY) (4LT, 5LT)	LMP 14		2
TRANSFORMER (24V SEC) (2T)	TSF 26		1
PUMP STARTER AUX CONTACT (AUX)	SWT 71		1
OIL PUMP STARTER (1M)	SRTD3A3D10		1
SUCTION PRESSURE GAGE	GAG 40		1
DISCHARGE, OIL PRESSURE GAGES	GAG 41		1
RELAY, BLOCKING (6CR)	RLY 134		1
RELAY, HOT GAS & LIMIT (8CR)	RLY 135		1
* TIMER, UNLOADED START (7TR)	TMR 110		1

* 1 YEAR PARTS

DUNHAM-BUSH, INC. WEST HARTFORD DIVISION

PART NAME REPLACEMENT PARTS LIST FOR PCX 120-0 PKG CHILLERS

ENGINEERING FILE NO. X-2834 A/B/C

SCALE	DRAWN BY	CHECKED	
1	NAME WK	NAME	UNLESS OTHERWISE SPECIFIED TOLERANCE ON FRACTIONAL DIMENSIONS ± DECIMAL DIMENSIONS ± ANGLES ±
	DATE 3-23-79	DATE 12-1-75	

SUPERSEDES

Sheet 1 of 3 REV

* REVISION 7/9/79

DESCRIPTION	D/B PART NO. STANDARD	D/B PART NO. ALTERNATE	QTY
COMPRESSOR ASSEMBLY 1610DLF1LOD			
SUCTION GASKET (4" 150#)	GKT 252		2
DISCHARGE GASKET (3" 300#)	GKT 258		2
INDICATOR ASSEMBLY (SLIDE VALVE)	IDR 56A		1
MOTOR COUPLING	CPL 164		1
DISCHARGE CHECK VALVE	VAL726		1
SEAL FIELD REPLACEMENT KIT	XFRK 772		1
CHILLER ASSEMBLY			
SUCTION HEAD FILTER 14"	X2834X 10		
FLOW SWITCH	FLR58A		
CHILLER RELIEF VALVE	SWT 61		1
PILOT EXPANSION VALVE	VAL 73A T1		1
EXPANSION VALVE WITH COIL	VAL 919		1
CHILLER INLET HEAD GASKET	VAL 786		1
CHILLER OUTLET HEAD GASKET	GKT 350T1		2
SIGHT GLASS (MOISTURE INDICATOR)	RNG 181		1
FILTER DRIER BLOCK	0817G10		1
TEMPERATURE SENSOR CONTROL	BLK 42		4
LIQUID INJECTION ASSY	CNT 233T4		1
*EXPANSION VALVE	INJ3AT1		1
*SOLENOID VALVE COIL	VAL691T1		1
SOLENOID VALVE/LESS COIL	COL123T1		1
SEAL OIL COOLER ASSEMBLY	VAL902T10		1
*SOLENOID VALVE COIL	SOC1AT1		
*TEMPERATURE PILOT VALVE	COL122T1		1
CHECK VALVE	VAL769		1
SOLENOID VALVE/LESS COIL	VAL 388		1
	VAL 488		1

DUNHAM-BUSH, INC.

WEST HARTFORD DIVISION

PART NAME REPLACEMENT PARTS LIST FOR PCX 120-0 PKG CHILLERS

ENGINEERING FILE NO. X-2834 A/B/C

SCALE	DRAWN BY	CHECKED	
—	NAME W/C	NAME	UNLESS OTHERWISE SPECIFIED TOLERANCE IS FRACTIONAL DIMENSIONS ± DECIMAL DIMENSIONS ± ANGLES ±
	DATE 9-28-73	DATE 12-1-75	

SUPERSEDES

Sheet 2 of 3

REV

DESCRIPTION		D/B PART NO: STANDARD	D/B PART NO: ALTERNATE	QTY
CONDENSER ASSEMBLY	14"	X2834X08		
CONDENSER RELIEF VALVE		VAL734T2		2
INLET HEAD GASKET		GKT 259		1
RETURN HEAD GASKET		GKT 143		1
REFRIGERANT OUTLET GASKET		GKT 62		2
OIL SUMP ASSEMBLY	16"	X2834X19		
*OIL SUMP HEATER		HTR 71		2
				1
				1
SIGHT GLASS				1
GLASS		GLS 16A		1
RETAINING NUT		GA 210		1
BACK-UP RING		GA 211		1
GASKET		GA 212		1
		GKT517		2
OIL LINE GASKETS (2 BOLT FLANGE)		GKT 340		4
SUMP DISCHARGE GASKET		GKT 258		1
SUMP DISCHARGE CHECK VALVE GASKET		GKT 267		2
OIL FILTER ASSEMBLY		FLR 110AT1,		
FILTER ELEMENT W/GASKETS		FLR 125		1
				1
UNLOAD SOLENOID VALVE ASSY		VAL 509A		1
* 24V COIL		COL122T41		2
* 115V COIL		COL122T40		1
SOLENOID VALVE/LESS COIL		VAL 488		3
METERING VALVE		VAL 547		3
ACCESSORIES				
OIL		OIL 3		35 GAL

This drawing contains designs and other information which are the property of DUNHAM-BUSH, IN
This drawing may not, in whole or in part, be duplicated or disclosed or used for manufacture of t
part disclosed herein, without the prior written permission of DUNHAM-BUSH, INC.

DUNHAM-BUSH, INC.
WEST HARTFORD CONN 06110 U.S.A.
WEST HARTFORD DIVISION

PART NAME: REPLACEMENT PARTS LIST FOR PCX 120-0 PKG CHILLERS

MAT'L: ENGINEERING FILE NO. X- X2834 A/B/C

SCALE	DRAWN BY	CHECKED	UNLESS OTHERWISE SPECIFIED TOLERANCE
	NAME WK	NAME NG	FRACTIONAL DIMENSIONS ±
	DATE 9-26-73	DATE 12-1-75	DECIMAL DIMENSIONS ±
			ANGLES ±

SUPERSEDES

SHT 3 of 3

REV

Exhibit G-2

FORM NO. 2505B

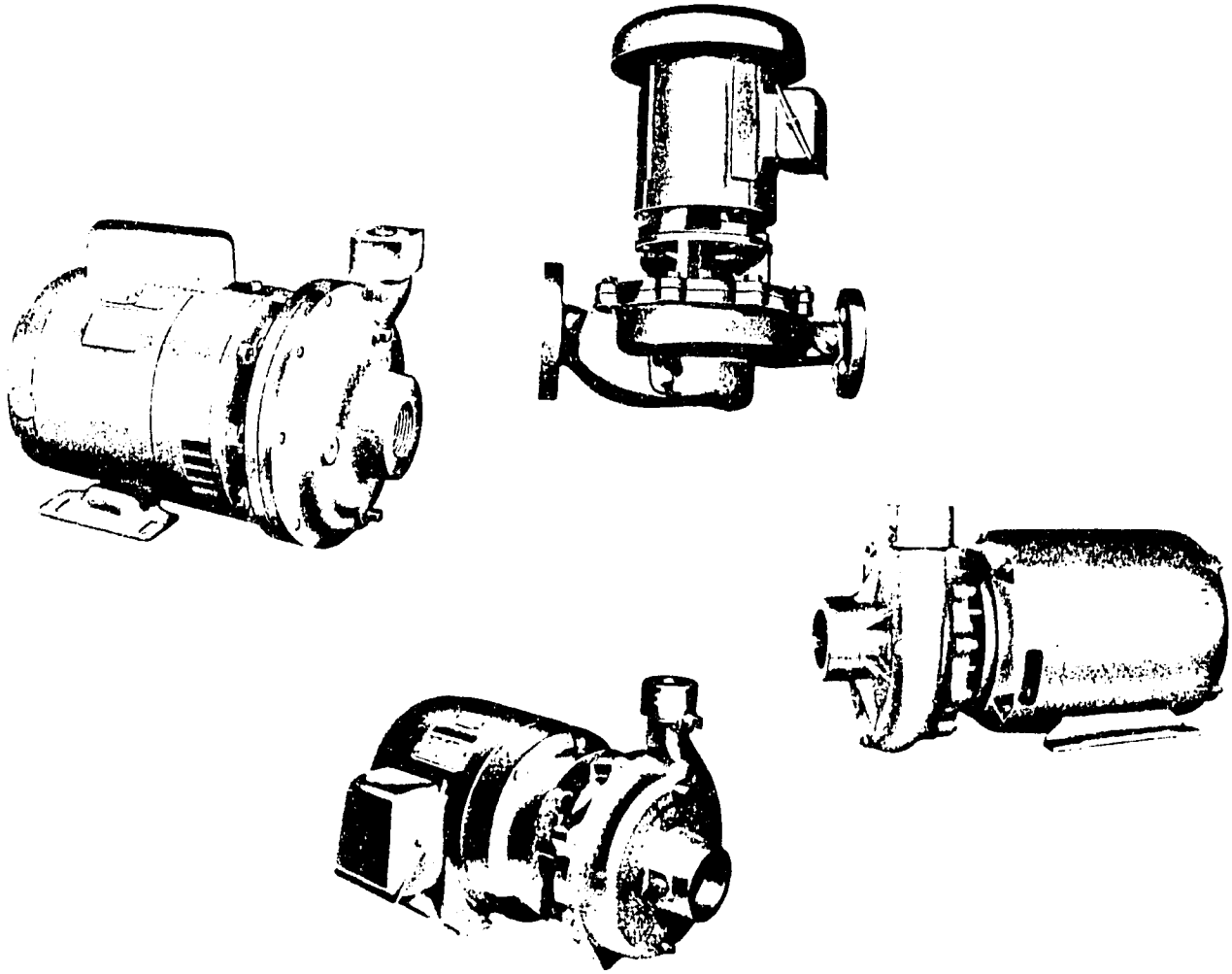

DUNHAM-BUSH

CENTRIFUGAL PUMPS

TYPE A5, A7, A9 AND PM7

PARTS SELECTION LIST

INDEX

	Pg.
NOMENCLATURE	1
ORDERING PROCEDURE	1
A5 PUMPS	
1/3 HP, 1/2 HP AND 3/4 HP	2
1 HP, 1-1/2 HP AND 2 HP	3
A9 PUMPS AND PARTS LIST	
1/2 HP, 3/4 HP AND 1 HP	4
1 1/2 HP	5
2 HP	6-7
3 HP	8
5 HP	9
7 1/2 HP	10
10 HP AND 15 HP	11
SERIES A A9 PUMPS	
1/2 HP, 3/4 HP AND 1 HP	12
1-1/2 HP	13
2 HP	14
3 HP	15
5 HP	16
7-1/2 HP	17
10 AND 15 HP	18
A7 PUMPS	
3/4", 1-1/4" AND 1-1/2" DISCHARGE	19
2" AND 2-1/2" DISCHARGE	20
PM7 PUMPS	
1", 1-1/4" AND 1-1/2" DISCHARGE	21
2" AND 2-1/2" DISCHARGE	22
A7A PUMPS	
3/4", 1-1/4" AND 1-1/2" DISCHARGE	23
PM7A PUMPS	
1", 1-1/4" AND 1-1/2" DISCHARGE	24

DUNHAM-BUSH RESERVES THE RIGHT TO MAKE CHANGES IN SPECIFICATIONS AND DESIGN WITHOUT NOTICE.

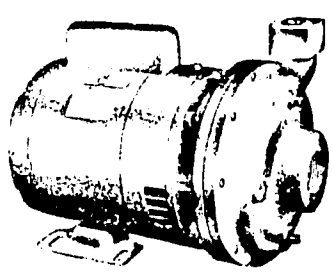

TYPE A5 PUMP

TYPE A7A AND A7 PUMPS

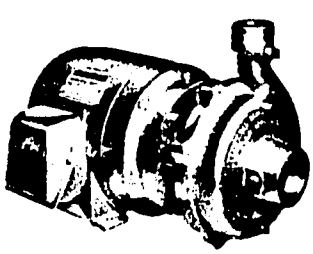

TYPE A9 PUMP

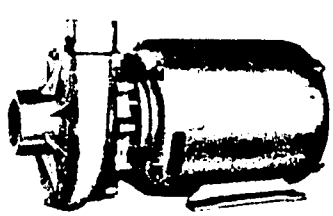

TYPE PM7 AND PM7A PUMPS

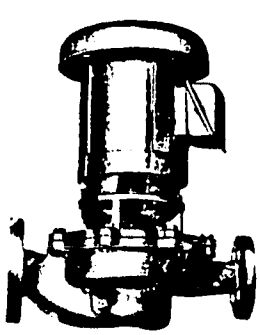

877

NOMENCLATURE

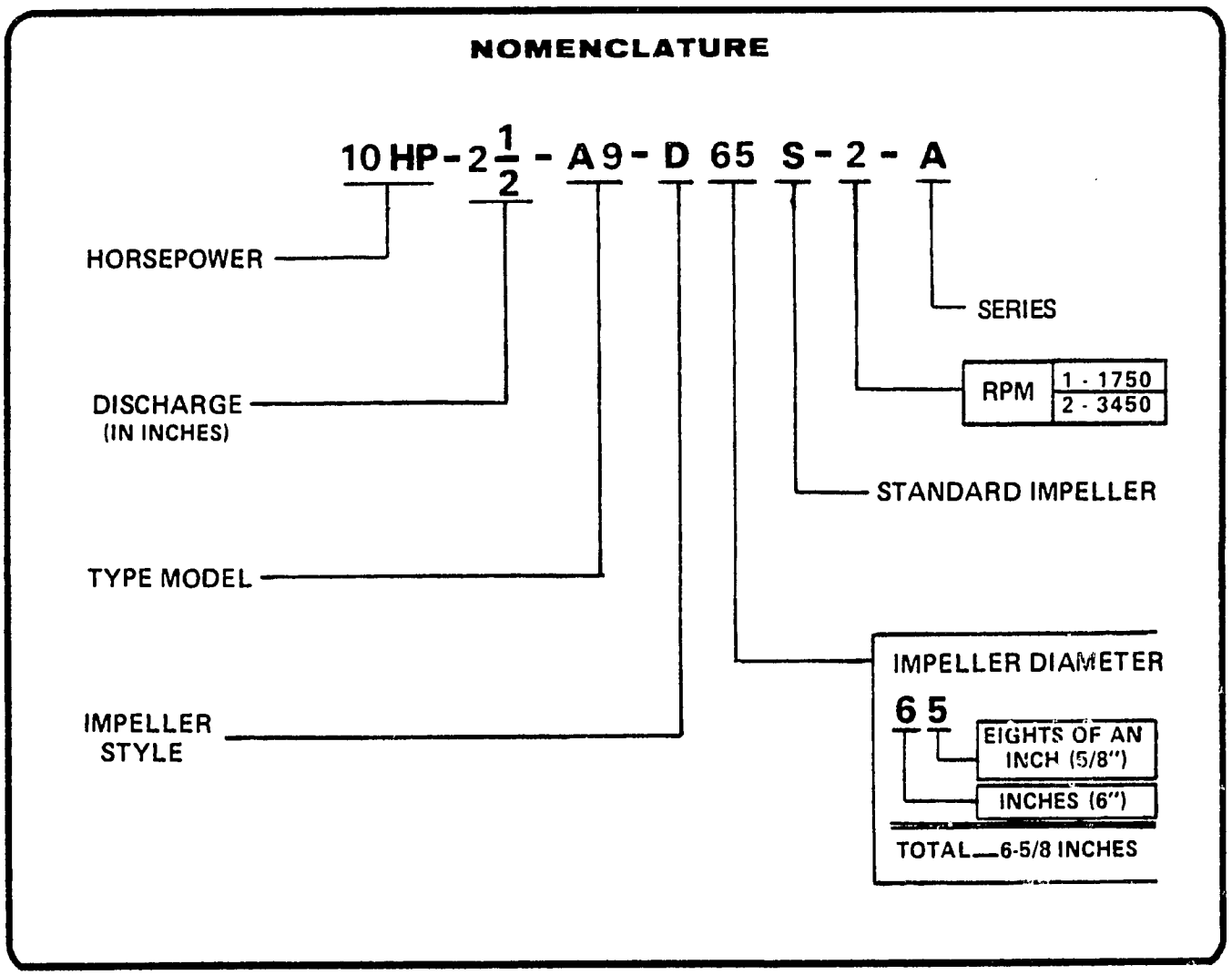

ORDERING PROCEDURE

1. Complete part number and description is required when ordering.
2. When a part number is not known or shown in the parts catalog, the complete model and serial number of the unit on which the part is to be used must be given.
3. Send all orders to:

   DUNHAM-BUSH, INC., PARTS DEPT.
   811 E. MAIN ST.
   MARSHALLTOWN, IOWA, 50158

4. Prices can be found in the latest revision of Form 17448 and are for one item or kit as applicable.
5. Minimum billing is $25.00.
6. All prices are subject to federal, state, local or other taxes which may be applicable.
7. All orders requiring **special handling** will have a surcharge of $25.00 or the actual cost of this requirement whichever is greater.
8. Dunham-Bush reserves the right to substitute parts if they are interchangeable with those ordered. The invoice will reflect the cost of the actual part shipped.

9 Refer to latest revision of Form 17448 for prices.

10 Refer to the latest revision of Form 1278 for terms of sale.

318

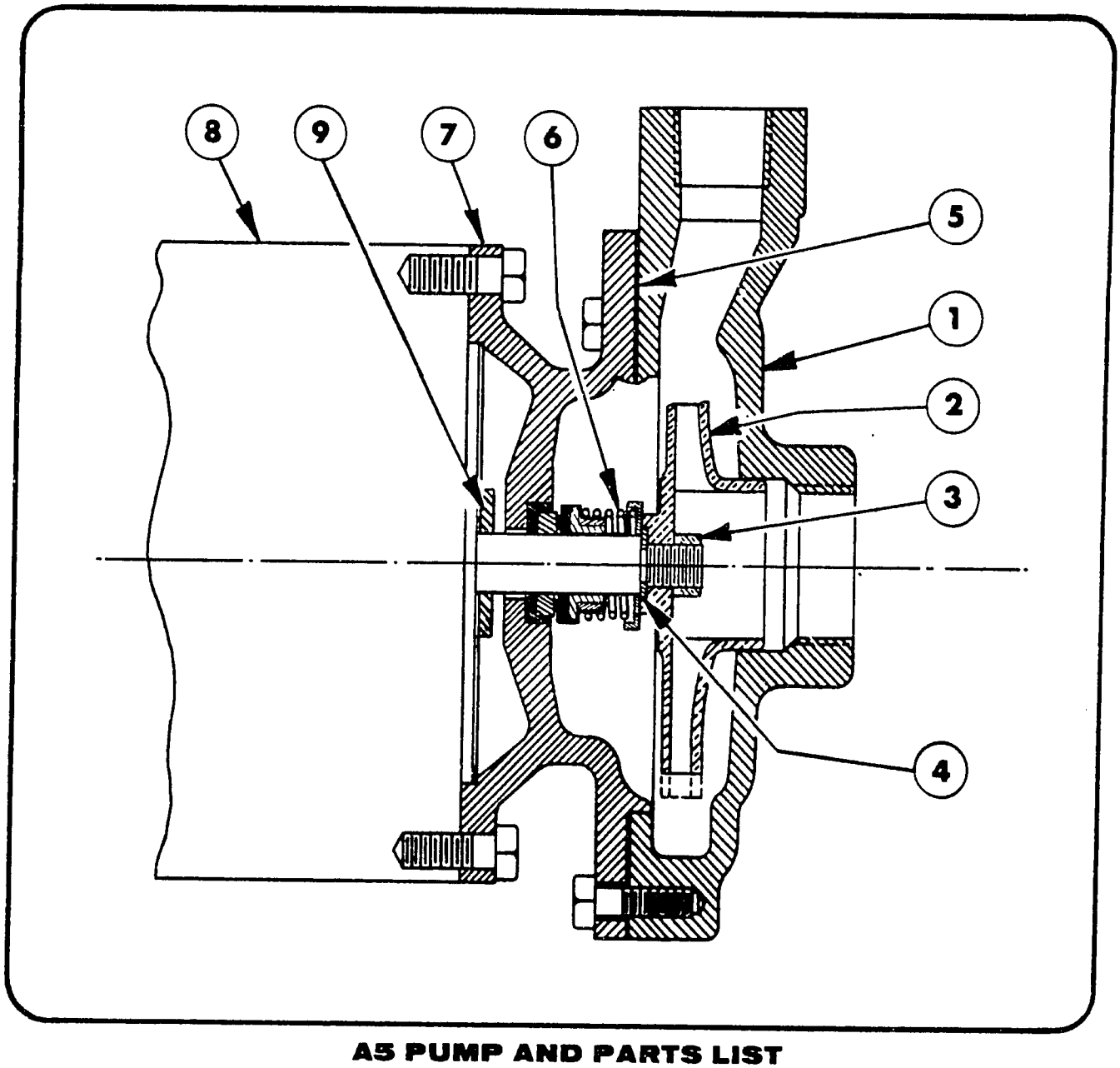

A5 PUMP AND PARTS LIST

1/3 HP, 1/2 HP AND 3/4 HP

PART NUMBER AND DESCRIPTION	1/3 HP 1" 1φ & 3φ A5C2	1/3 HP 1 1/2" 1φ & 3φ A5C2	1/2 HP 1" 1φ & 3φ A5C2	1/2 HP 1 1/2" 1φ & 3φ A5C2	3/4 HP 3/4" 1φ & 3φ A5C2	3/4 HP 1 1/2" 1φ & 3φ A5C2
1 CASE (CAST IRON) CASE (BRONZE)	E6046 E6078	E6048 E6080	E6045 E6078	E6048 E6080	E6041 E6077	E6048 E6080
2 IMPELLER	D5197x 3 15/16"	D5203x 3 1/4"	D5197x 4 5/16"	D5203x 3 5/8"	D5193x 4 5/16"	D5203x 4 3/32"
3 NUT - IMPELLER	P-116	P-116	P-116	P-116	P-116	P-116
4 WASHER	C8709	C8709	C8709	C8709	C8709	C8709
5 GASKET-CASE *	D5352	D5352	D5352	D5352	D5352	D5352
6 SEAL-SHAFT *	472	472	472	472	472	472
7 HEAD (CAST IRON) HEAD (BRONZE)	E6042 E6081	E6042 E6081	E6042 E6081	E6042 E6081	E6042 E6081	E6042 E6081
8 MOTOR	Contact Dunham-Bush, Inc., Marshalltown, Iowa					
9 SLINGER	C8854	C8854	C8854	C8854	C8854	C8854

NOTES: 1. NON-STANDARD pump parts are not shown. When ordering repair parts, refer to page 1 of this catalog.
2. * = These parts are required when replacing shaft seal.

879

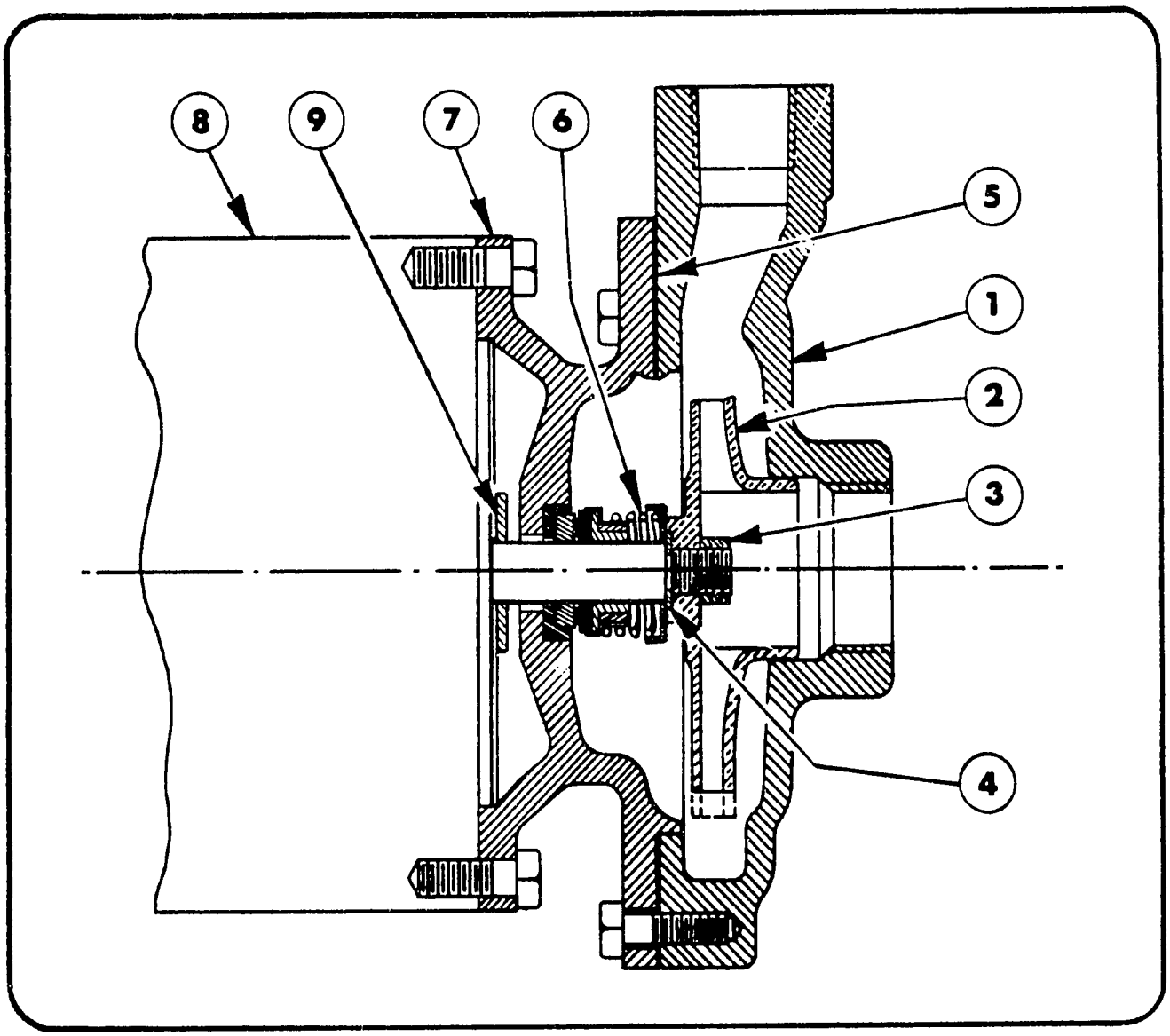

A5 PUMP AND PARTS LIST

1 HP, 1½ HP AND 2 HP

	PART NUMBER AND DESCRIPTION	1 HP ¾" 1ϕ & 3ϕ A5A2	1 HP 1½" 1ϕ & 3ϕ A5C2	1½ HP ¾" 1ϕ & 3ϕ A5A2	1½ HP 1¼" 1ϕ & 3ϕ A5B2	2 HP 1" 1ϕ & 3ϕ A5A2	2 HP 1¼" 1ϕ & 3ϕ A5B2	2 HP 1½" 1ϕ & 3ϕ A5B2
1	CASE (CAST IRON) CASE (BRONZE)	E6041 E6077	E6048 E6080	E6041 E6077	E6047 E6079	E6046 E6078	E6047 E6079	E6048 E6080
2	IMPELLER	D5193x 4 9/16"	D5203x 4 5/16"	D5193x 5"	D5199x 4 1/8"	D5195x 4 1/2"	D5199x 4 1/2"	D5202x 4 1/8"
3	NUT–IMPELLER	P-116	P-116	P-116	P-116	P-116	P-116	P-116
4	WASHER	C8709	C8709	C8709	C8709	C8709	C8709	C8709
5	GASKET–CASE *	D5352	D5352	D5352	D5352	D5352	D5352	D5352
6	SEAL–SHAFT *	472	472	472	472	472	472	472
7	HEAD (CAST IRON) HEAD (BRONZE)	E6042 E6081	E6042 E6081	E6042 E6081	E6042 E6081	E6042 E6081	E6042 E6081	E6042 E6081
8	MOTOR	Contact Dunham-Bush, Inc., Marshalltown, Iowa						
9	SLINGER	C8854	C8854	C8854	C8854	C8854	C8854	C8854

NOTES: 1. NON-STANDARD pump parts are not shown. When ordering repair parts, refer to page 1 of this catalog.
2. * = These parts are required when replacing shaft seal.

880

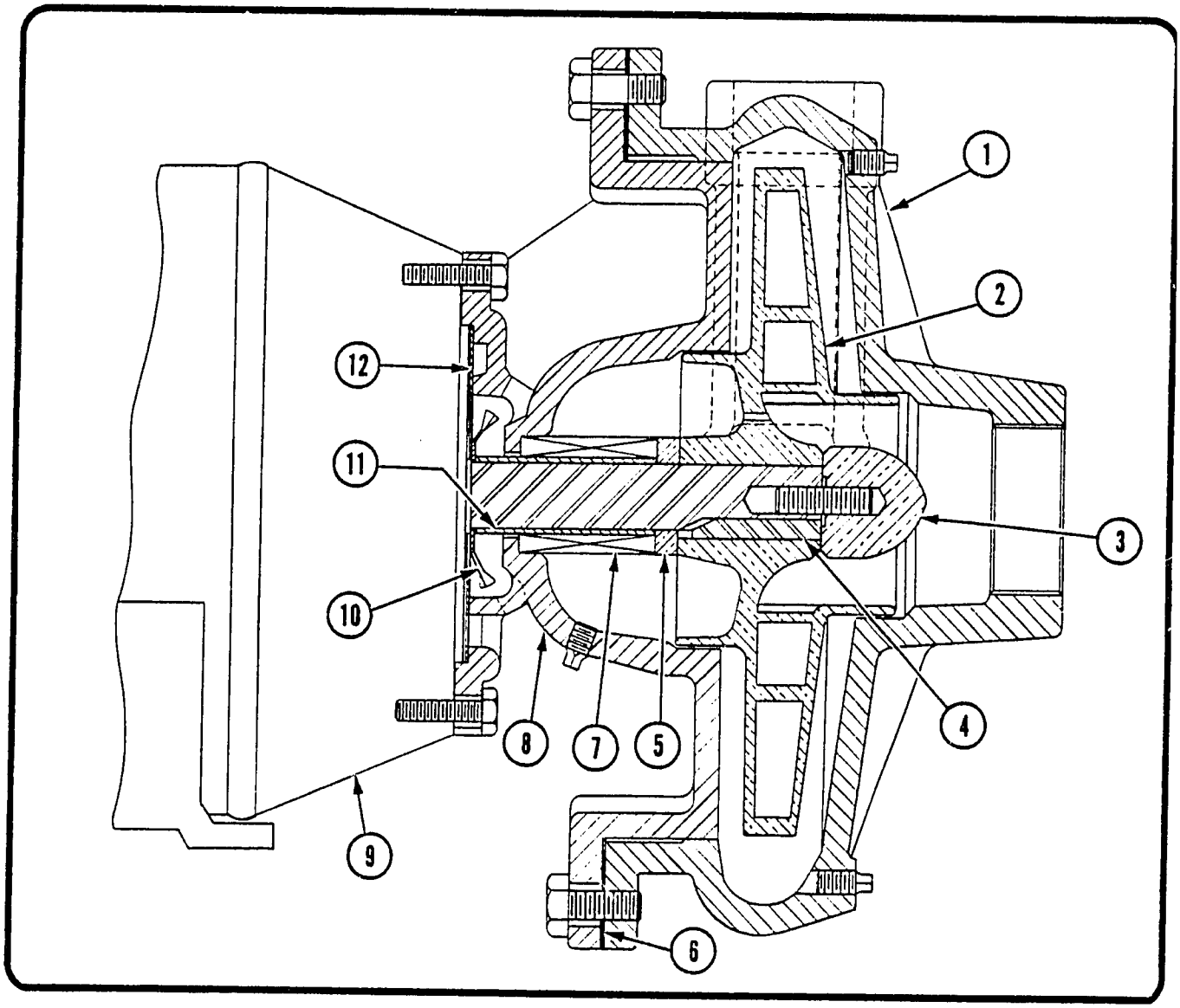

A9 PUMP AND PARTS LIST—½ HP, ¾ HP AND 1 HP

	PART	½ HP 1" 1ϕ & 3ϕ A9C1	¾ HP 1" 1ϕ & 3ϕ A9C1	¾ HP 1¼" 1ϕ & 3ϕ A9D1	1 HP 1" 1ϕ & 3ϕ A9C1	1 HP 1¼" 1ϕ & 3ϕ A9D1	1 HP 2" 1ϕ & 3ϕ A9D1
1	*CASE (CAST IRON) *CASE (BRONZE)	F541 D2-76	F541 D2-76	F540 D2-74	F541 D2-76	F540 D2-74	F544 D2-80
2	IMPELLER	C2-73x 6 1/16"	C2-73x 6¾"	E6181x 4 13/16"	C2-73x 7 5/16"	E6181x 5 13/32"	E6188x 5⅜"
3	STUD & NUT ASSEMBLY	C10035 C8938	C10035 C8938	C10035 C8938	C10035 C8938	C10035 C8938	C10035 C8938
4	KEY	C10025	C10025	C10025	C10025	C10025	C10025
5	SEAL SPACER	C10060	C10060	C10060	C10060	C10060	C10060
6	GASKET	D5450	D5450	D5450	D5450	D5450	D5450
7	SHAFT SEAL	860	860	860	860	860	860
8	*HEAD (CAST IRON) *HEAD (BRONZE)	F539 D2-77	F539 D2-77	F539 D2-77	F539 D2-77	F539 D2-77	F539 D2-77
9	MOTOR	Contact Dunham-Bush, Inc., Marshalltown, Iowa					
10	SLINGER	C10037	C10037	C10037	C10037	C10037	C10037
11	SLEEVE	C10062	C10062	C10062	C10062	C10062	C10062
12	SHIELD	C8958	C8958	C8958	C8958	C8958	C8958

NOTE NON-STANDARD repair parts are not shown, when ordering furnish serial number. Complete ordering instructions are found on Page 1.

*When replacing item No. 8, head, before serial number 6605, item No. 1, case, must also be replaced.

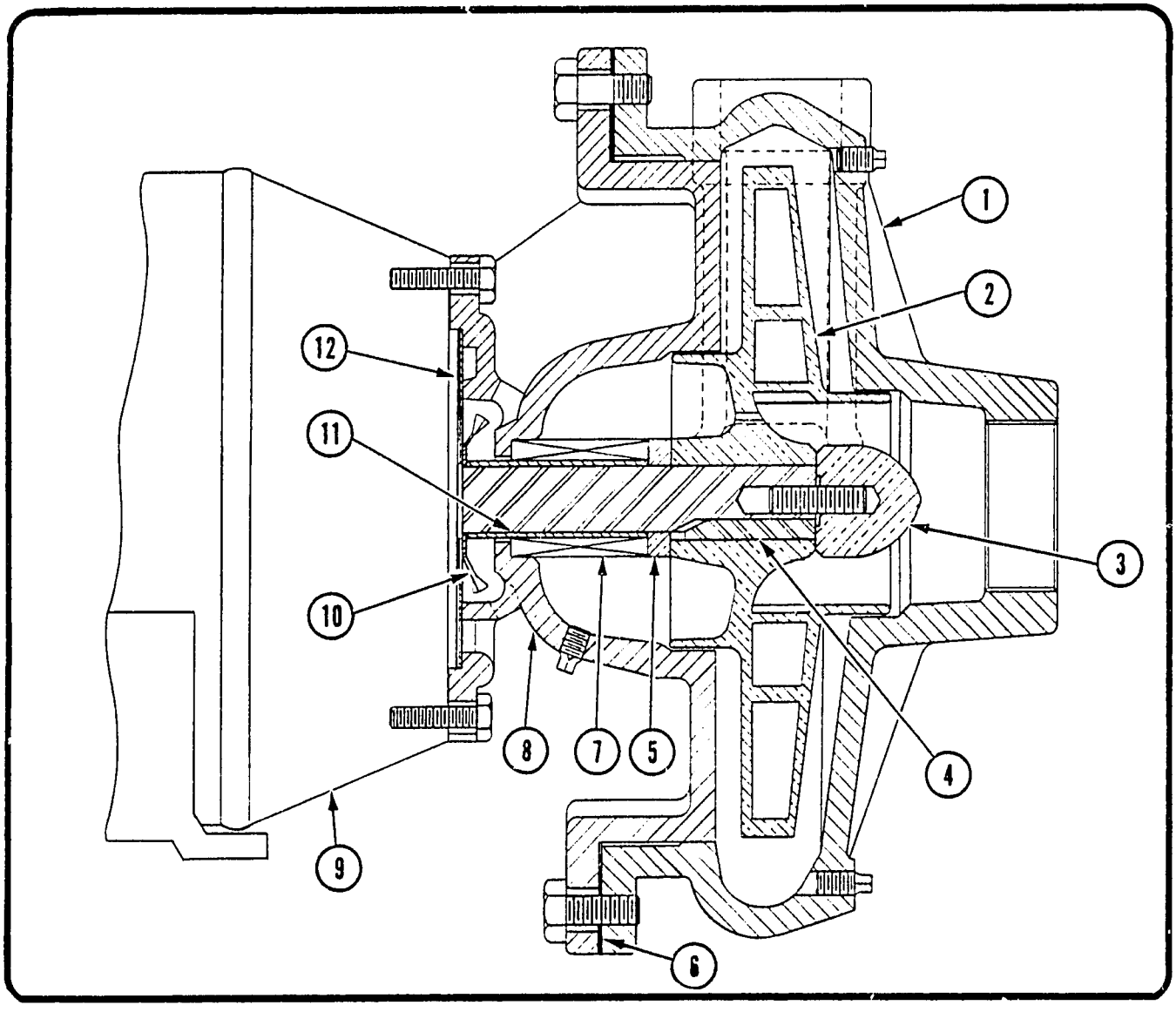

A9 PUMP AND PARTS LIST - 1½ HP

	PART	1½ HP 1" 1ϕ & 3ϕ A9C1	1½ HP 1¼" 1ϕ & 3ϕ A9D1	1½ HP 2" 1ϕ & 3ϕ A9D1	1½ HP 2½" 1ϕ & 3ϕ A9E2	1½ HP 2½" 1ϕ & 3ϕ A9D1
1	*CASE (CAST IRON) *CASE (BRONZE)	F541 D2-76	F540 D2-74	F544 D2-80	F545 D2-79	F545 D2-79
2	IMPELLER	C2-73x 8 7/16"	E6181x 6 3/8"	E6188x 5 29/32"	E6184x 3 15/16"	E6204x 5 21/32"
3	STUD & NUT ASSEMBLY	C10035 C8938	C10035 C8938	C10035 C8938	C10035 C8938	C10035 C8938
4	KEY	C10025	C10025	C10025	C10025	C10025
5	SEAL SPACER	C10060	C10060	C10060	C10060	C10060
6	GASKET	D5450	D5450	D5450	D5450	D5450
7	SHAFT SEAL	860	860	860	860	860
8	*HEAD (CAST IRON) *HEAD (BRONZE)	F539 D2-77	F539 D2-77	F539 D2-77	F539 D2-77	F539 D2-77
9	MOTOR	Contact Dunham-Bush, Inc., Marshalltown, Iowa				
10	SLINGER	C10037	C10037	C10037	C10037	C10037
11	SLEEVE	C10062	C10062	C10062	C10062	C10062
12	SHIELD	C8958	C8958	C8958	C8958	C8958

NOTE: NON-STANDARD repair parts are not shown, when ordering furnish serial number. Complete ordering instructions are found on Page 1.

*When ordering case for 2½" A9E, also show A2-51 Adapter, which must be pressed in the case.

* When replacing item No. 8, head, before serial number 6605, item No. 1, case, must also be replaced.

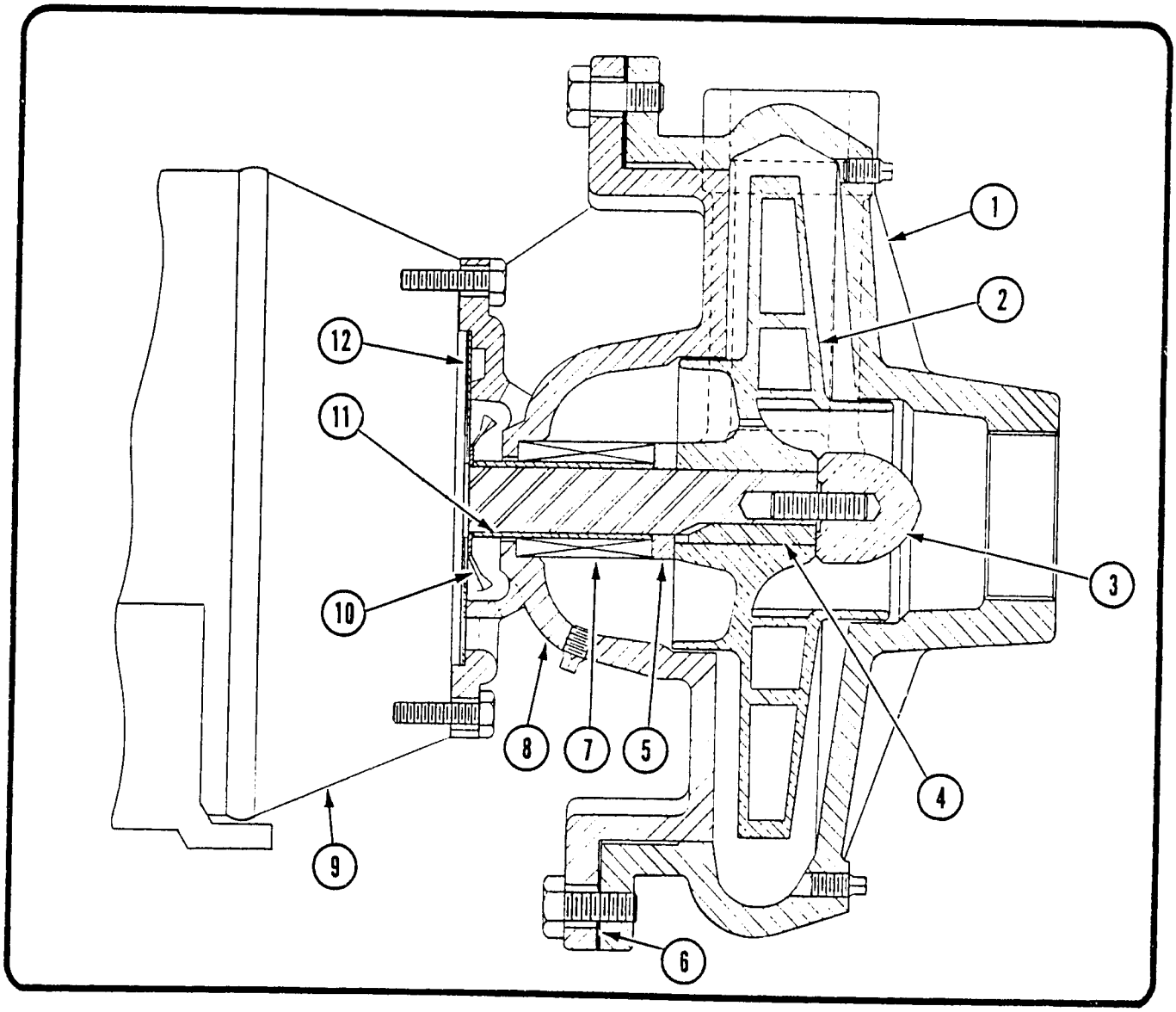

A9 PUMP AND PARTS LIST – 2 HP

PART	2 HP 1" 1ϕ A9C1	2 HP 1" 3ϕ A9C1	2 HP 1¼" 1ϕ A9D1	2 HP 1¼" 3ϕ A9D1
1 *CASE (CAST IRON) *CASE (BRONZE)	F541 D2-76	F541 D2-76	F540 D2-74	F540 D2-74
2 IMPELLER	C2-73x 9"	C2x73x 9"	E6181x 7 3/16"	E6181x 7 3/16"
3 STUD & NUT ASSEMBLY	C10035 C8938	C10035 C8938	C10035 C8938	C10035 C8938
4 KEY	C10025	C10025	C10025	C10025
5 SEAL SPACER	C10061	C10060	C10061	C10060
6 GASKET	D5450	D5450	D5450	D5450
7 SHAFT SEAL	861	860	861	860
8 *HEAD (CAST IRON) *HEAD (BRONZE)	F546 D2-77	F539 D2-77	F546 D2-78	F539 D2-77
9 MOTOR	Contact Dunham-Bush, Inc., Marshalltown, Iowa			
10 SLINGER	C10038	C10037	C10038	C10037
11 SLEEVE	C10063	C10062	C10063	C10062
12 SHIELD	D5478	C8958	D5478	C8958

NOTE: NON-STANDARD repair parts are not shown, when ordering furnish serial number. Complete ordering instructions are found on Page 1.

*When replacing item No. 8, head, before serial number 6605, item No. 1, case, must also be replaced.

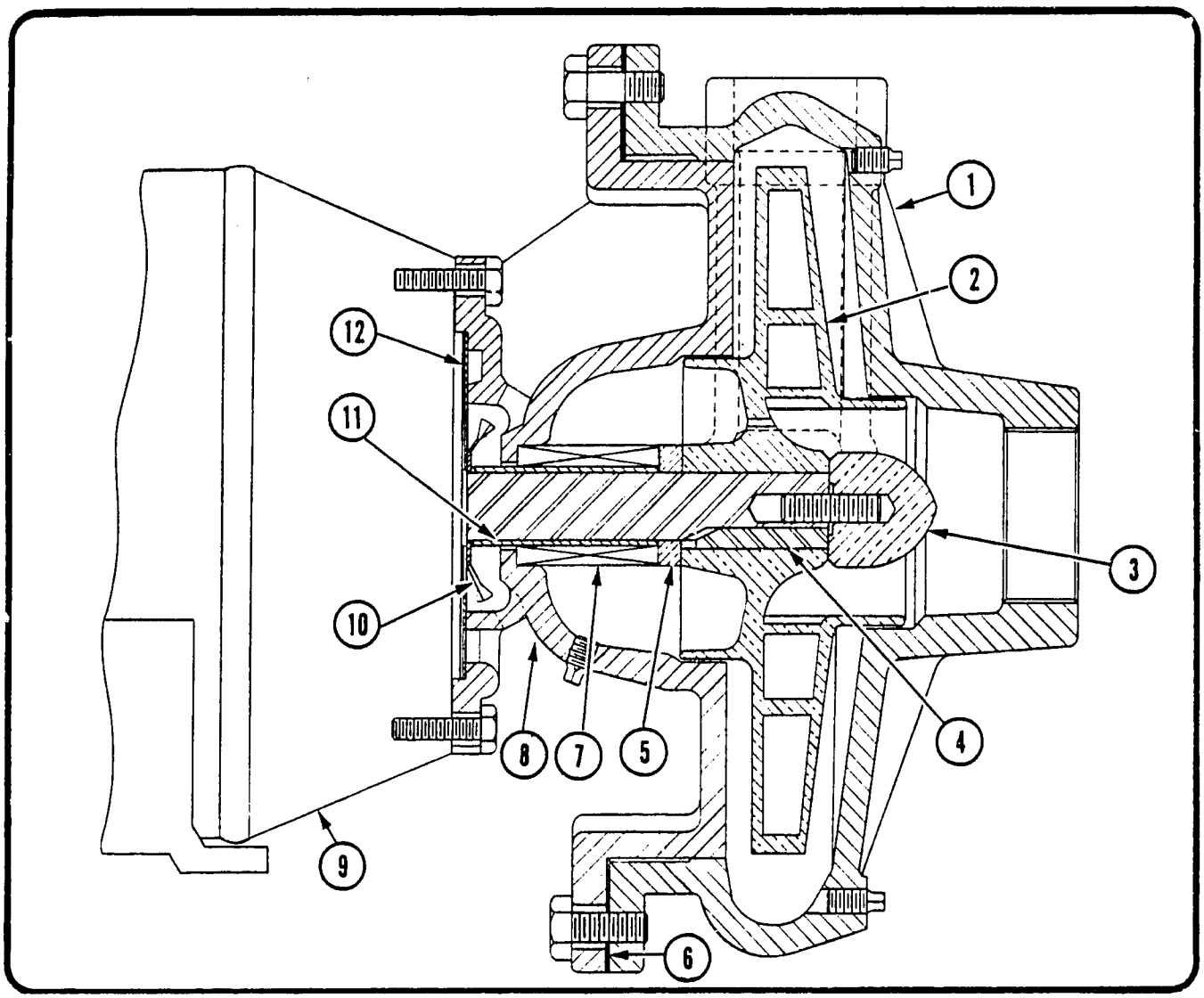

A9 PUMP AND PARTS LIST — 2 HP

	PART	2 HP 2" 1ϕ A9D1	2 HP 2" 3ϕ A9D1	2 HP 2½" 1ϕ A9D1	2 HP 2½" 3ϕ A9D1	2 HP 2½" 1ϕ & 3ϕ A9E2
1	*CASE (CAST IRON) *CASE (BRONZE)	F544 D2-80	F544 D2-80	F545 D2-79	F545 D2-79	F545 D2-79
2	IMPELLER	E6188x 6½"	E6188x 6½"	E6204x 6⅛"	E6204x 6⅛"	E6184x 3 13/16"
3	STUD & NUT ASSEMBLY	C10035 C8938	C10035 C8938	C10035 C8938	C10035 C8938	C10035 C8938
4	KEY	C10025	C10025	C10025	C10025	C10025
5	SEAL SPACER	C10061	C10060	C10061	C10060	C10060
6	GASKET	D5450	D5450	D5450	D5450	D5450
7	SHAFT SEAL	861	860	861	860	860
8	*HEAD (CAST IRON) *HEAD (BRONZE)	F546 D2-78	F539 D2-77	F546 D2-79	F539 D2-79	F539 D2-77
9	MOTOR	Contact Dunham-Bush, Inc., Marshalltown, Iowa				
10	SLINGER	C10038	C10037	C10038	C10037	C10037
11	SLEEVE	C10063	C10062	C10063	C10062	C10062
12	SHIELD	D5478	C8958	D5478	C8958	C8958

NOTE: NON-STANDARD repair parts are not shown, when ordering furnish serial number. Complete ordering instructions are found on Page 1.
*When ordering case for 2½" A9E, also show A2-51 Adapter, which must be pressed in the case.
When replacing item No. 8, head, before serial number 3605, item No. 1, case, must also be replaced.

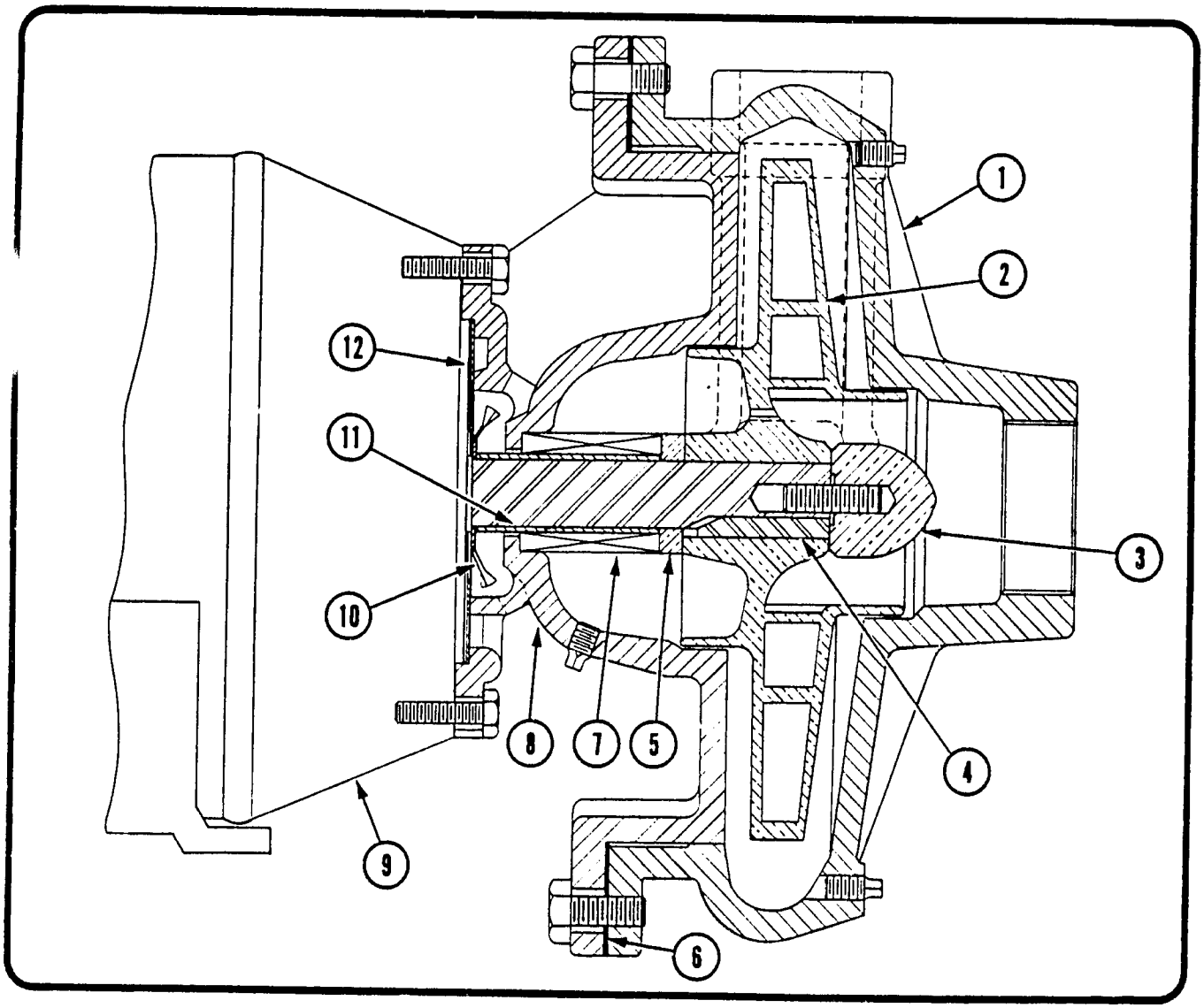

A9 PUMP AND PARTS LIST – 3 HP

	PART	3 HP 1" 3ϕ A9D2	3 HP 1" 3ϕ A9C2	3 HP 1¼" 3ϕ A9D1	3 HP 1¼" 3ϕ A9D2	3 HP 2" 3ϕ A9D1	3 HP 2½" 3ϕ A9D1	3 HP 2½" 3ϕ A9E2
1	*CASE (CAST IRON) *CASE (BRONZE)	F541 D2-76	F541 D2-76	F540 D2-74	F540 D2-74	F544 D2-80	F545 D2-79	F545 D2-79
2	IMPELLER	E6141x 5¼"	C2-73x 6 1/16"	E6181x 8¼"	E6181x 4 7/16"	E6188x 7 1/16"	E6204x 6¾"	E6184x 4¼"
3	STUD & NUT ASSEMBLY	C10035 C8938	C10035 C8938	C10035 C8938	C10035 C8938	C10035 C8938	C10035 C8938	C10035 C8938
4	KEY	C10025	C10025	C10025	C10025	C10025	C10025	C10025
5	SEAL SPACER	C10060	C10060	C10061	C10060	C10061	C10061	C10060
6	GASKET	D5450	D5450	D5450	D5450	D5450	D5450	D5450
7	SHAFT SEAL	860	860	861	860	861	861	860
8	*HEAD (CAST IRON) *HEAD (BRONZE)	F539 D2-77	F539 D2-77	F546 D2-78	F539 D2-77	F546 D2-78	F546 D2-78	F539 D2-77
9	MOTOR	Contact Dunham-Bush, Inc., Marshalltown, Iowa						
10	SLINGER	C10037	C10037	C10038	C10037	C10038	C10038	C10037
11	SLEEVE	C10062	C10062	C10063	C10062	C10063	C10063	C10062
12	SHIELD	C8958	C8958	D5478	C8958	D5478	D5478	C8958

NOTE: NON-STANDARD repair parts are not shown, when ordering furnish serial number. Complete ordering instructions are found on Page 1.
*When replacing item No. 8, head, before serial number 6605, item No. 1, case, must also be replaced.

885

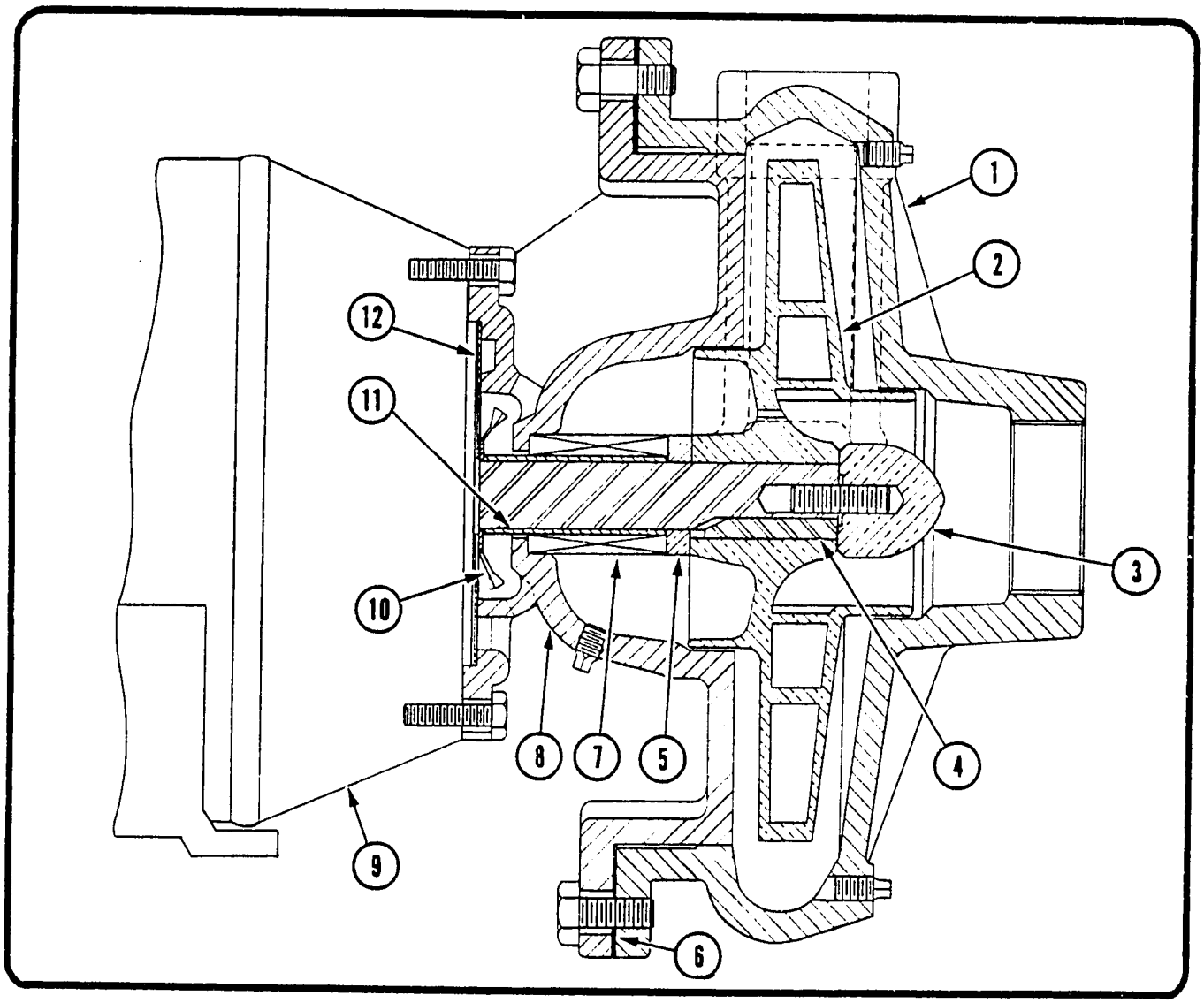

A9 PUMP AND PARTS LIST — 5 HP

PART	5 HP 1" 3ϕ A9C2	5 HP 1" 3ϕ A9D2	5 HP 1¼" 3ϕ A9D2	5 HP 2" 3ϕ A9D1	5 HP 2" 3ϕ A9D2	5 HP 2½" 3ϕ A9D1	5 HP 2½" 3ϕ A9D2
1 *CASE (CAST IRON) *CASE (BRONZE)	F541 D2-76	F541 D2-76	F540 D2-74	F544 D2-80	F544 D2-80	F545 D2-79	F545 D2-79
2 IMPELLER	C2-73x 6 9/16"	E6141x 5 7/8"	E6181x 5 13/32"	E6188x 8 7/16"	E6188x 4 11/16"	E6204x 7 13/16"	E6204x 4 3/4"
3 STUD & NUT ASSEMBLY	C10035 C8938	C10035 C8938	C10035 C8938	C10035 C8938	C10035 C8938	C10035 C8938	C10035 A2-672
4 KEY	C10025	C10025	C10025	C10025	C10025	C10025	C10025
5 SEAL SPACER	C10061	C10061	C10061	C10061	C10061	C10061	C10061
6 GASKET	D5450	D5450	D5450	D5450	D5450	D5450	D5450
7 SHAFT SEAL	861	861	861	861	861	861	861
8 *HEAD (CAST IRON) *HEAD (BRONZE)	F546 D2-78	F546 D2-78	F546 D2-78	F546 D2-78	F546 D2-78	F546 D2-78	F546 D2-78
9 MOTOR	Contact Dunham-Bush, Inc., Marshalltown, Iowa						
10 SLINGER	C10038	C10038	C10038	C10038	C10038	C10038	C10038
11 SLEEVE	C10063	C10063	C10063	C10063	C10063	C10063	C10063
12 SHIELD	D5478	D5478	D5478	D5478	D5478	D5478	D5478

NOTE: NON-STANDARD repair parts are not shown, when ordering furnish serial number. Complete ordering instructions are found on Page 1.

When replacing item No. 8, head, before serial number 6605, item No. 1, case, must also be replaced.

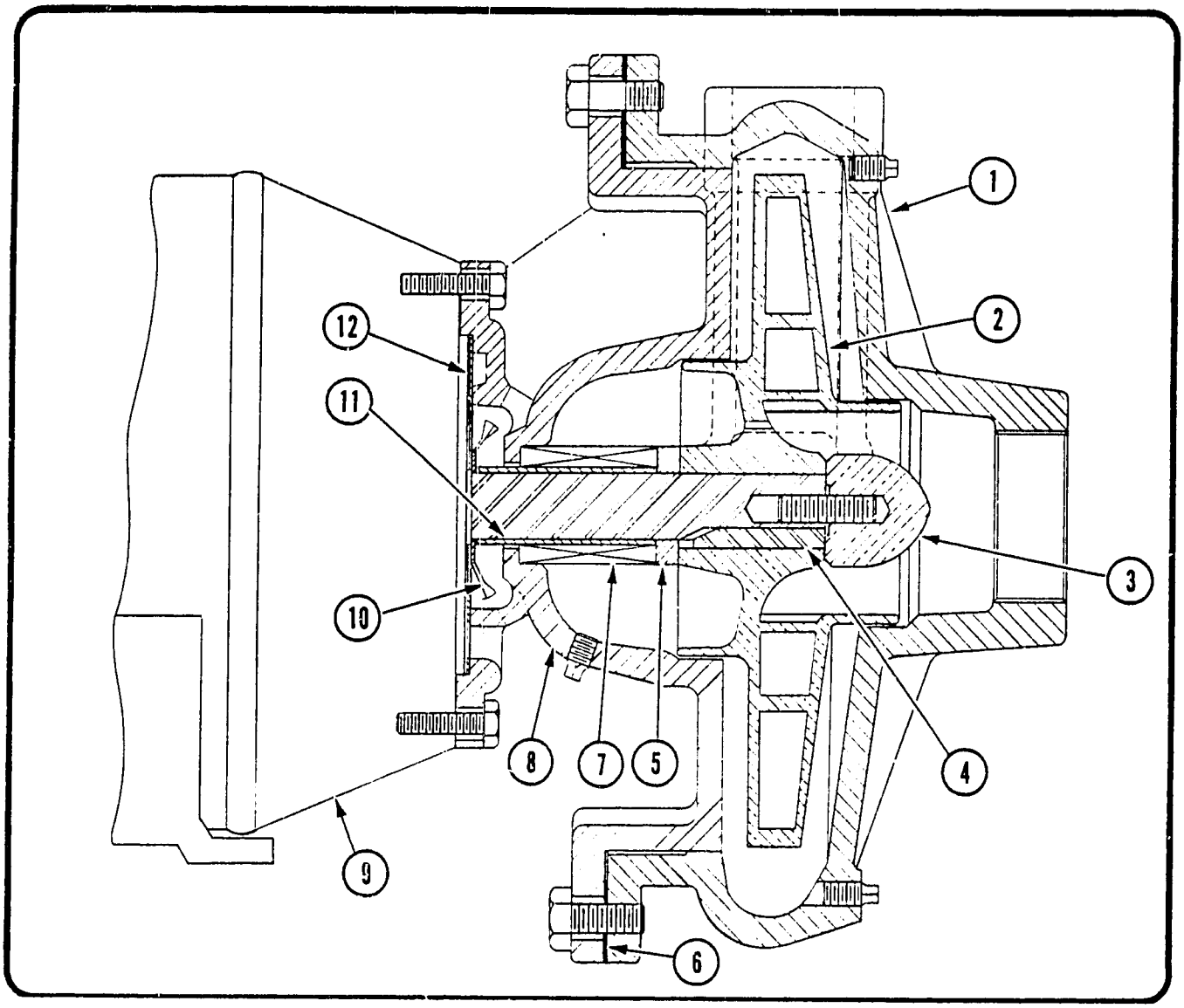

A9 PUMP AND PARTS LIST - 7½ HP

	PART	7½ HP 1¼" 3ϕ A9D2	7½ HP 2" 3ϕ A9D2	7½ HP 2½" 3ϕ A9D1	7½ HP 2½" 3ϕ A9D2
1	*CASE (CAST IRON) *CASE (BRONZE)	F540 D2-74	F544 D2-80	F545 D2-79	F545 D2-79
2	IMPELLER	E6181x 5 13/16"	E6188x 5 9/16"	E6204x 9"	E6204x 5 9/16"
3	STUD & NUT ASSEMBLY	C10035 C8938	C10035 A2-672	C10035 C8938	C10035 A2-672
4	KEY	C10025	C10025	C10025	C10025
5	SEAL SPACER	C10061	C10061	C10061	C10061
6	GASKET	D5450	D5450	D5450	D5450
7	SHAFT SEAL	861	861	861	861
8	*HEAD (CAST IRON) *HEAD (BRONZE)	F546 D2-78	F546 D2-78	F546 D2-78	F546 D2-78
9	MOTOR	Contact Dunham-Bush, Inc., Marshalltown, Iowa			
10	SLINGER	C10038	C10038	C10038	C10038
11	SLEEVE	C10063	C10063	C10063	C10063
12	SHIELD	D5478	D5478	D5478	D5478

NOTE: NON-STANDARD repair parts are not shown, when ordering furnish serial number. Complete ordering instructions are found on Page 1.

*When replacing item No. 8, head, before serial number 6605, item No. 1, case, must also be replaced.

87

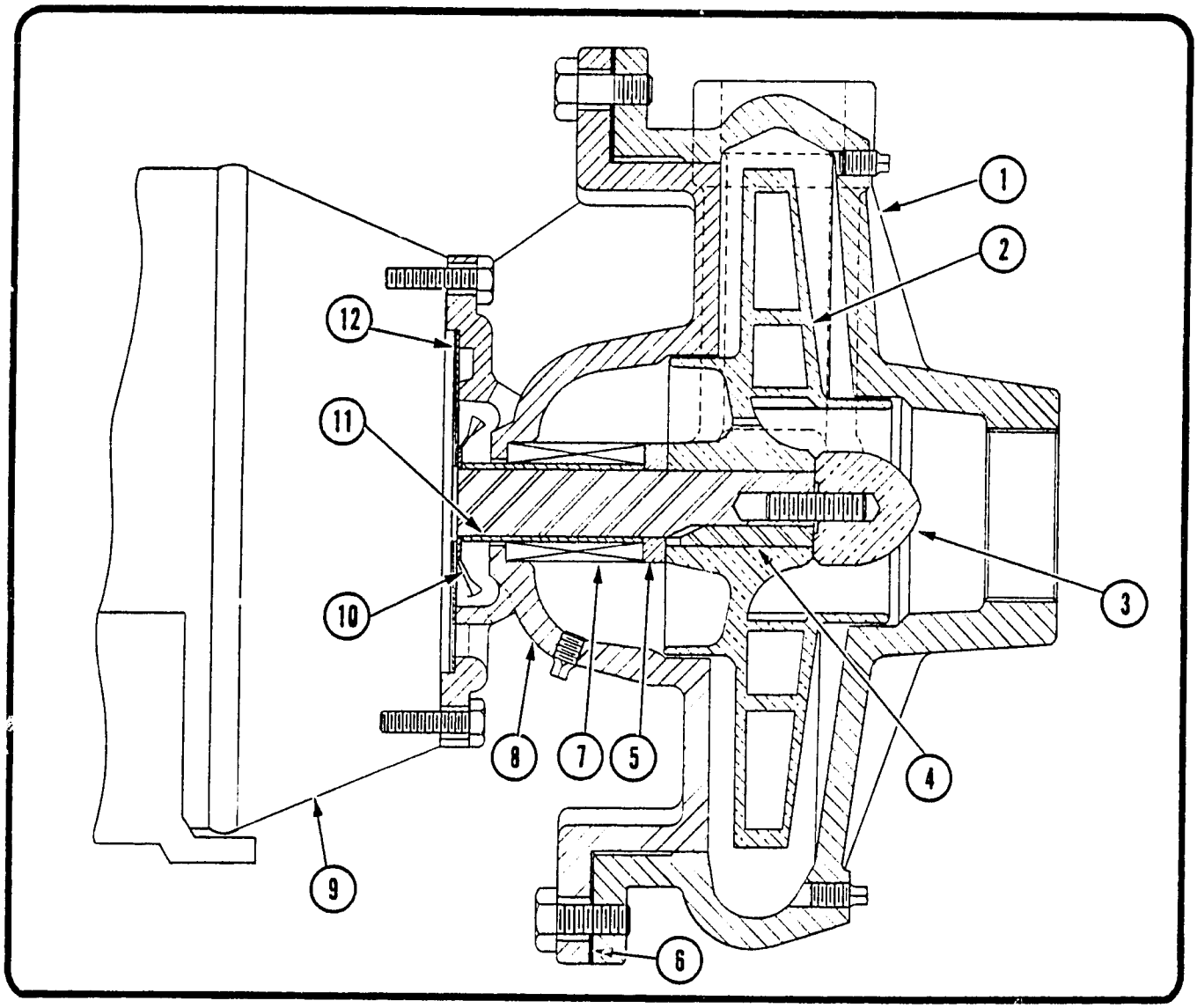

A9 PUMP AND PARTS LIST – 10 HP AND 15 HP

	PART	10 HP 1¼" 3ϕ A9D2	10 HP 2" 3ϕ A9D2	10 HP 2½" 3ϕ A9D2	15 HP 2" 3ϕ A9D2
1	*CASE (CAST IRON) *CASE (BRONZE)	F540 D2-74	F544 D2-80	F545 D2-79	F544 D2-80
2	IMPELLER	E6181x 6⅜"	E6188x 5²⁹⁄₃₂"	E6204x 5²¹⁄₃₂"	E6188x 6⁵⁄₁₆"
3	STUD & NUT ASSEMBLY	C10035 C8938	C10035 A2-672	C10035 A2-672	C10035 A2-672
4	KEY	C10025	C10025	C10025	C10025
5	SEAL SPACER	C10061	C10061	C10061	C10061
6	GASKET	D5450	D5450	D5450	D5450
7	SHAFT SEAL	861	861	861	861
8	*HEAD (CAST IRON) *HEAD (BRONZE)	F546 D2-78	F546 D2-78	F546 D2-78	F546 D2-78
9	MOTOR	Contact Dunham-Bush, Inc., Marshalltown, Iowa			
10	SLINGER	C10038	C10038	C10038	C10038
11	SLEEVE	C10063	C10063	C10063	C10063
12	SHIELD	D5478	D5478	D5478	D5478

NOTE: NON-STANDARD repair parts are not shown, when ordering furnish serial number. Complete ordering instructions are found on Page 1.
*When replacing item No. 8, head, before serial number 6605, item No. 1, case, must also be replaced.

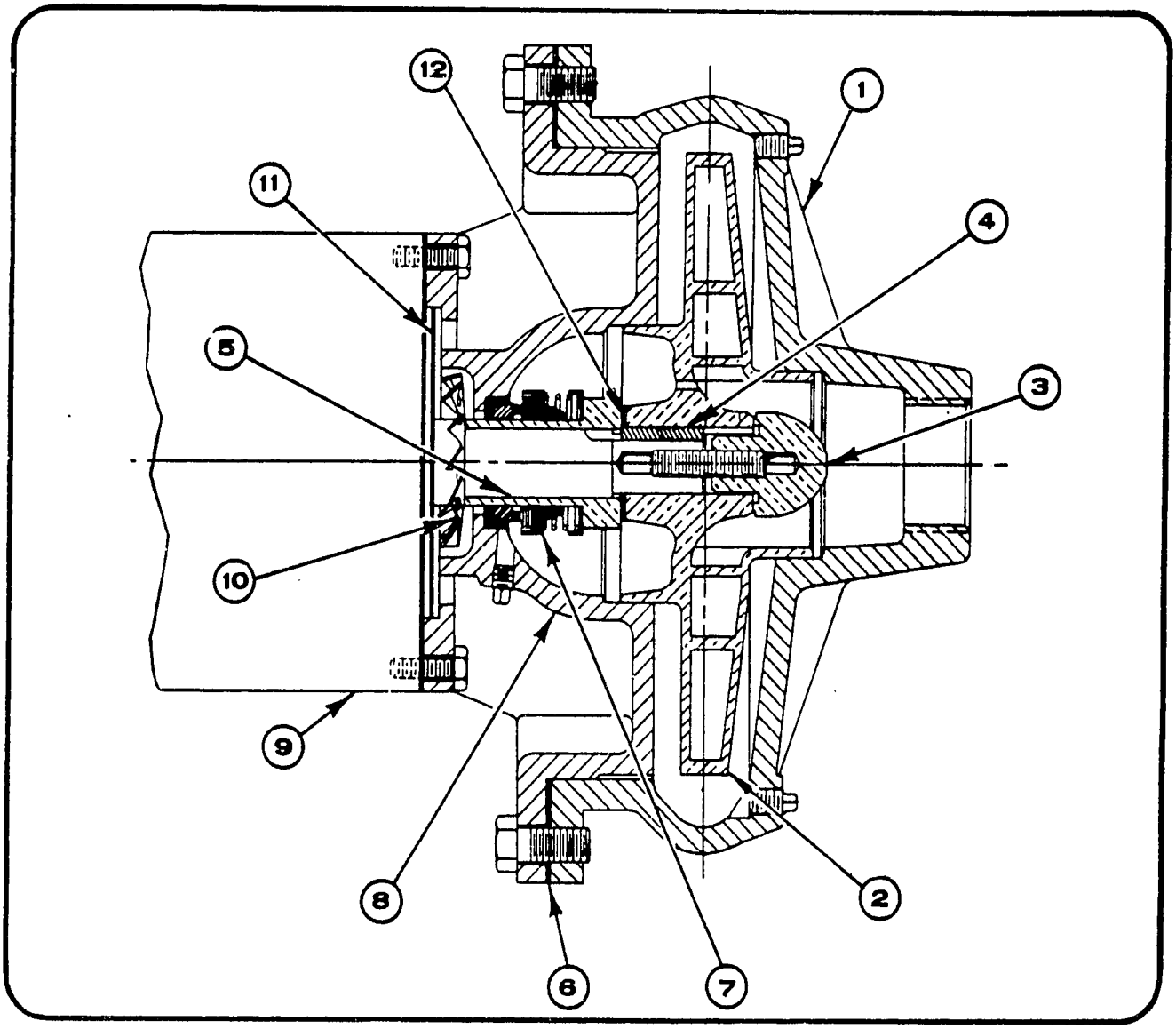

A9 PUMP AND PARTS LIST
SERIES A - ½ HP, ¾ HP AND 1 HP

	PART NUMBER AND DESCRIPTION	½ HP 1" 1ϕ & 3ϕ A9C1A	¾ HP 1" 1ϕ & 3ϕ A9C1A	¾ HP 1¼" 1ϕ & 3ϕ A9D1A	1 HP 1" 1ϕ & 3ϕ A9C1A	1 HP 1¼" 1ϕ & 3ϕ A9D1A	1 HP 2" 1ϕ & 3ϕ A9D1A
1	CASE (CAST IRON) CASE (BRONZE)	F541 D2-76	F541 D2-76	F540 D2-74	F541 D2-76	F540 D2-74	F544 D2-80
2	IMPELLER (BRONZE)	C2-3211X 6 1/16"	C2-3211X 6 3/4"	C2-3213X 4 15/16"	C2-3211X 7 5/16"	C2-3213X 5 15/16"	C2-3214X 5 3/8
3	STUD & NUT ASSEMBLY	C10035 A2-3898	C10035 A2-3898	C10035 A2-3898	C10035 A2-3898	C10035 A2-3898	C10035 A2-3898
4	KEY	C7763	C7763	C7763	C7763	C7763	C7763
5	SLEEVE *	A2-3905	A2-3905	A2-3905	A2-3905	A2-3905	A2-3905
6	GASKET *	D5450	D5450	D5450	D5450	D5450	D5450
7	SHAFT SEAL *	3179	3179	3179	3179	3179	3179
8	HEAD (CAST IRON) HEAD (BRONZE)	D2-1478 D2-1480	D2-1478 D2-1480	D2-1478 D2-1480	D2-1478 D2-1480	D2-1478 D2-1480	D2-1478 D2-1480
9	MOTOR	Contact Dunham-Bush, Inc., Marshalltown, Iowa					
10	SLINGER	C10038	C10038	C10038	C10038	C10038	C10038
11	SHIELD	C8958	C8958	C8958	C8958	C8958	C8958
12	GASKET *	A2-3020	A2-3020	A2-3020	A2-3020	A2-3020	A2-3020

NOTES: 1. NON-STANDARD pump parts are not shown. When ordering repair parts, refer to page 1 of this catalog.
2. * = These parts are required when replacing shaft seal.

884

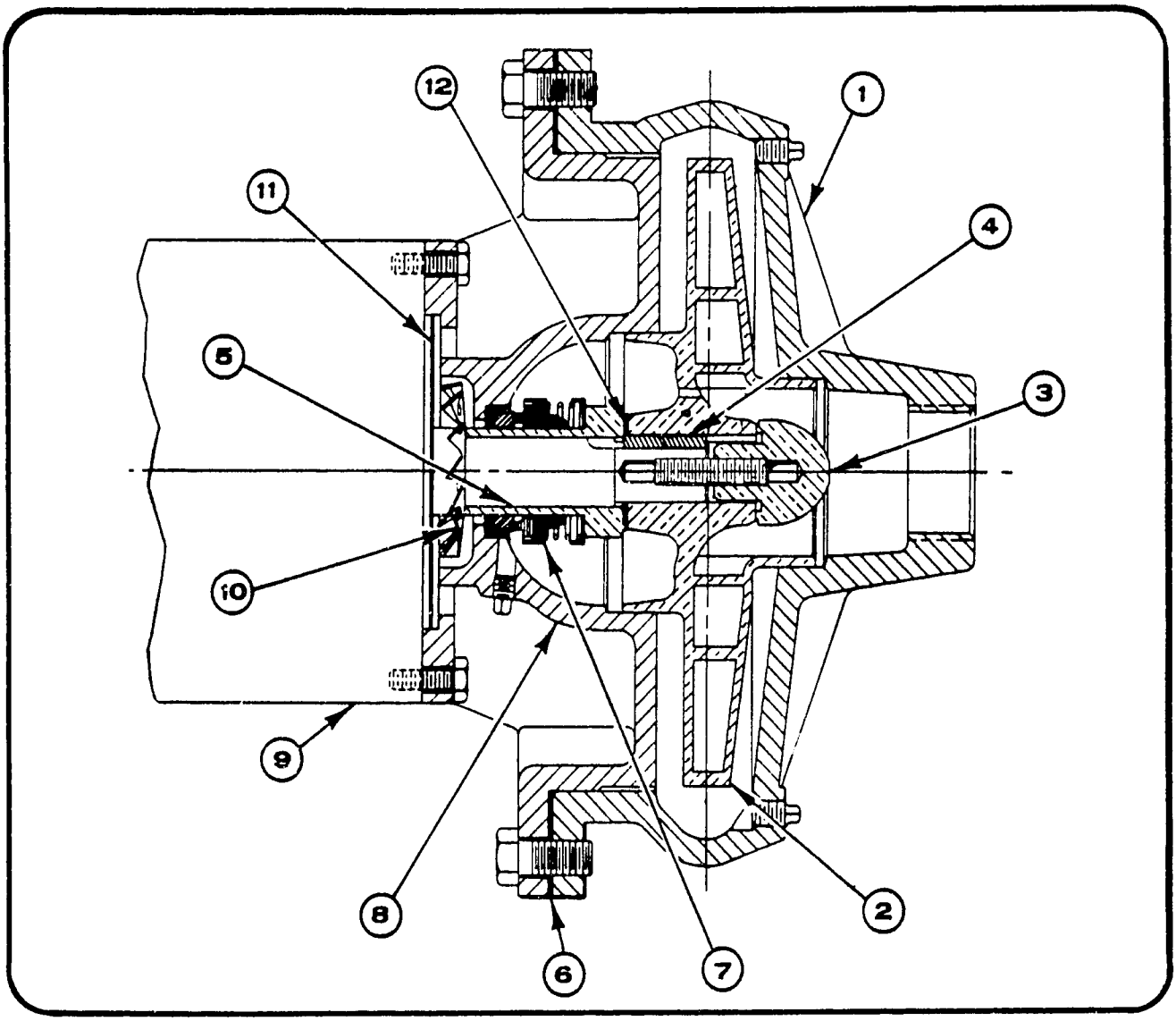

A9 PUMP AND PARTS LIST
SERIES A – 1½ HP

PART NUMBER AND DESCRIPTION	1½ HP 1" 1φ & 3φ A9C1A	1½ HP 1¼" 1φ & 3φ A9D1A	1½ HP 2" 1φ & 3φ A9D1A	1½ HP 2½" 1φ & 3φ A9D1A
1 CASE (CAST IRON) CASE (BRONZE)	D541 D2-76	F540 D2-74	F544 D2-80	F545 D2-79
2 IMPELLER (BRONZE)	C2-3211X $8^{7}/_{16}$"	C2-3213X $6^{3}/_{8}$"	C2-3214X $5^{29}/_{32}$"	C2-3215X $5^{21}/_{33}$"
3 STUD & NUT ASSEMBLY	C10035 A2-3898	C10035 A2-3898	C10035 A2-3898	C10035 A2-3898
4 KEY	C7763	C7763	C7763	C7763
5 SLEEVE *	A2-3905	A2-3905	A2-3905	A2-3905
6 GASKET *	D5450	D5450	D5450	D5450
7 SHAFT SEAL *	3179	3179	3179	3179
8 HEAD (CAST IRON) HEAD (BRONZE)	D2-1478 D2-1480	D2-1478 D2-1480	D2-1478 D2-1479	D2-1478 D2-1480
9 MOTOR	Contact Dunham-Bush, Inc., Marshalltown, Iowa			
10 SLINGER	C10038	C10038	C10038	C10038
11 SHIELD	C8958	C8958	C8958	C8958
12 GASKET *	A2-3020	A2-3020	A2-3020	A2-3020

NOTES: 1. NON-STANDARD pump parts are not shown. When ordering repair parts, refer to page 1 of this catalog.
2. * = These parts are required when replacing shaft seal.

890

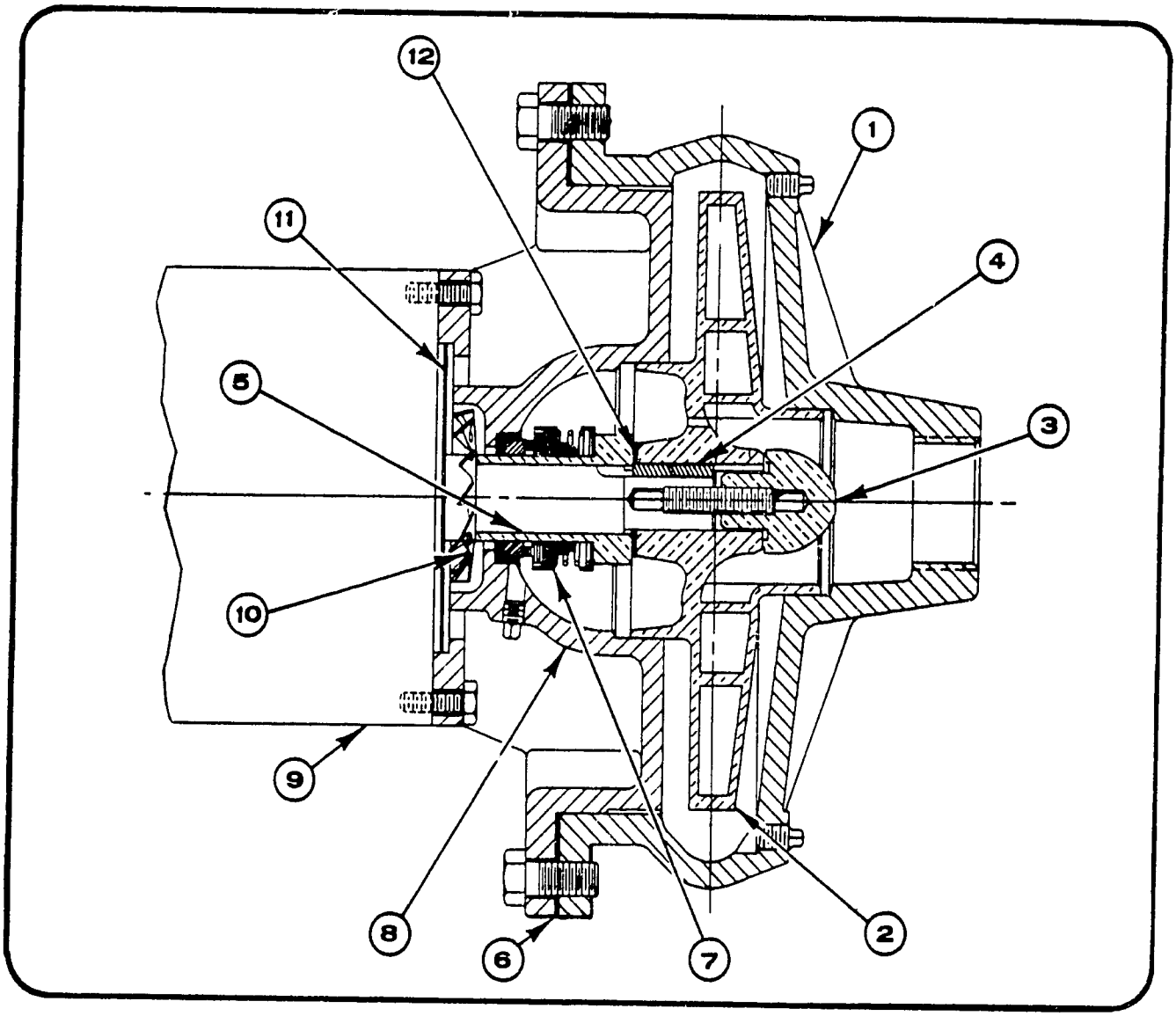

A9 PUMP AND PARTS LIST
SERIES A - 2 HP

PART NUMBER AND DESCRIPTION	2 HP 1" 1ϕ A9C1A	2 HP 1" 3ϕ A9C1A	2 HP 1¼" 1ϕ A9D1A	2 HP 1¼" 3ϕ A9D1A	2 HP 2" 1ϕ D9D1A	2 HP 2" 3ϕ A9D1A	2 HP 2½" 1ϕ A9D1A	2 HP 2½" 3ϕ A9D1A
1 CASE (CAST IRON) CASE (BRONZE)	F541 D2-76	F541 D2-76	F540 D2-74	F540 D2-74	F544 D2-80	F544 D2-80	F545 D2-79	F545 D2-79
2 IMPELLER (BRONZE)	C2-3211X 9"	C2-3211X 9"	C2-3213X $7^3/_{16}$"	C2-3213X $7^3/_{16}$"	C2-3214X $6^1/_2$"	C2-3214X $6^1/_2$"	C2-3215X $6^1/_8$"	C2-3215X $6^1/_8$"
3 STUD & NUT ASSEMBLY	C10035 A2-3898	C10035 A2-3898	C10035 A2-3898	C10035 A2-3898	C10035 A2-3898	C10035 A2-3898	C10035 A2-3898	C10035 A2-3898
4 KEY	C7763	C7763	C7763	C7763	C7763	C7763	C7763	C7763
5 SLEEVE *	A2-3905	A2-3905	A2-3905	A2-3905	A2-3905	A2-3905	A2-3905	A2-3905
6 GASKET *	D5450	D5450	D5450	D5450	D5450	D5450	D5450	D5450
7 SHAFT SEAL *	3179	3179	3179	3179	3179	3179	3179	3179
8 HEAD (CAST IRON) HEAD (BRONZE)	D2-1478 D2-1480	D2-1478 D2-1480	D2-1478 D2-1480	D2-1478 D2-1480	D2-1478 D2-1480	D2-1478 D2-1480	D2-1478 D2-1480	D2-1478 D2-1480
9 MOTOR	Contact Dunham-Bush, Inc., Marshalltown, Iowa							
10 SLINGER	C10038	C10038	C10038	C10038	C10038	C10038	C10038	C10038
11 SHIELD	C8958	C8958	C8958	C8958	C8958	C8958	C8958	C8958
12 GASKET *	A2-3020	A2-3020	A2-3020	A2-3020	A2-3020	A2-3020	A2-3020	A2-3020

NOTES: 1. NON-STANDARD pump parts are not shown. When ordering repair parts, refer to page 1 of this catalog.
2. * = These parts are required when replacing shaft seal.

89

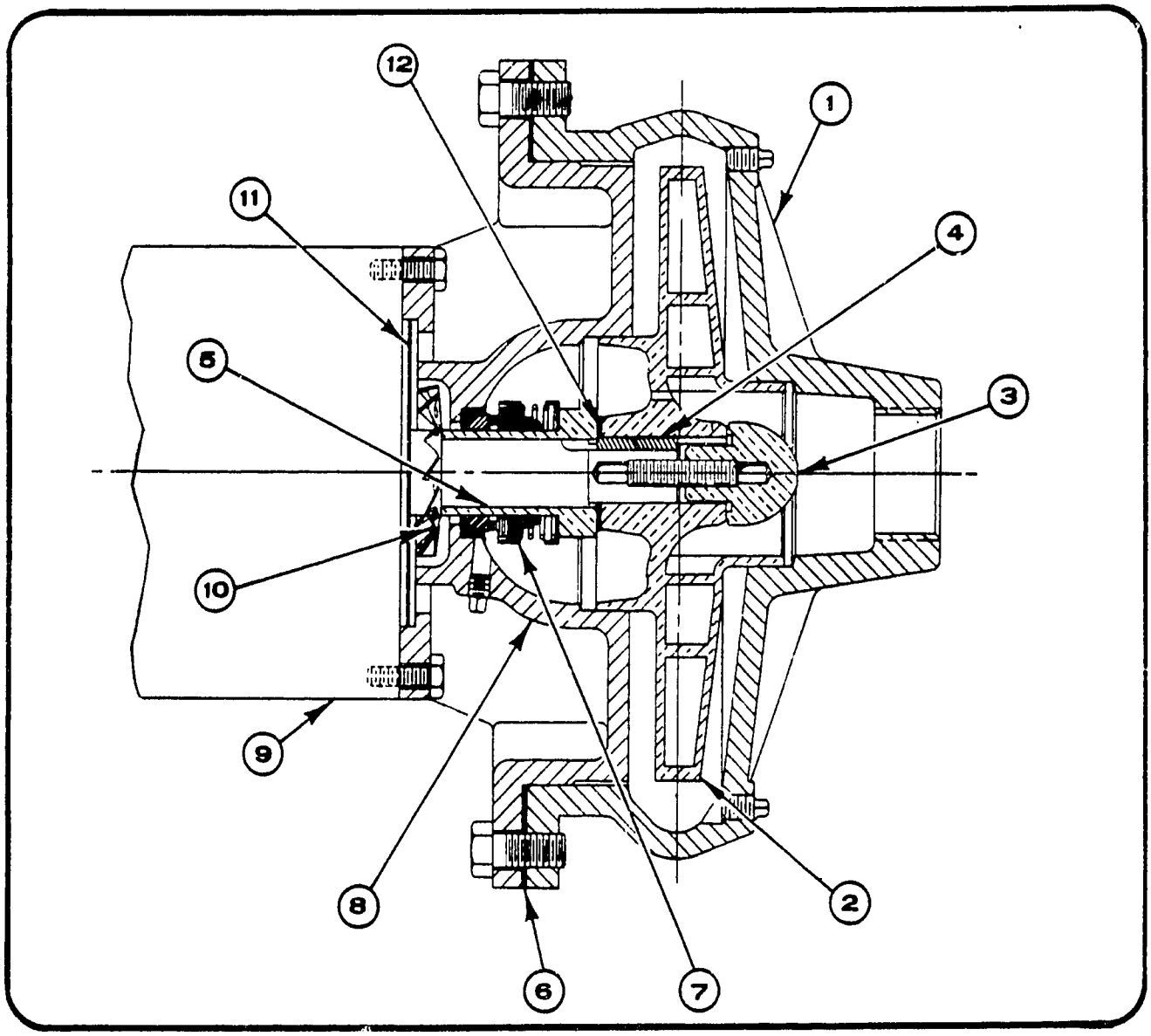

A9 PUMP AND PARTS LIST SERIES A - 3 HP

PART NUMBER AND DESCRIPTION	3 HP 1" 3ϕ A9D2A	3 HP 1" 3ϕ A9C2A	3 HP 1¼" 3ϕ A9D1A	3 HP 1¼" 3ϕ A9D2A	3 HP 2" 3ϕ A9D1A	3 HP 2½" 3ϕ A9D1A
1 CASE (CAST IRON) CASE (BRONZE)	F541 D2-76	F541 D2-76	F540 D2-74	F540 D2-74	F544 D2-80	F545 D2-79
2 IMPELLER (BRONZE)	C2-3212X 5¼"	C2-3211X 6 1/16"	C2-3213X 8¼"	C2-3213X 4 7/16"	C2-3214X 7 1/16"	C2-3215X 6¾"
3 STUD & NUT ASSEMBLY	C10035 A2-3898	C10035 A2-3898	C10035 A2-3898	C10035 A2-3898	C10035 A2-3898	C10035 A2-3898
4 KEY	C7763	C7763	C7763	C7763	C7763	C7763
5 SLEEVE *	A2-3905	A2-3905	A2-3905	A2-3905	A2-3905	A2-3905
6 GASKET *	D5450	D5450	D5450	D5450	D5450	D5450
7 SHAFT SEAL *	3179	3179	3179	3179	3179	3179
8 HEAD (CAST IRON) HEAD (BRONZE)	D2-1478 D2-1480	D2-1478 D2-1480	D2-1478 D2-1480	D2-1478 D2-1480	D2-1478 D2-1480	D2-1478 D2-1480
9 MOTOR	Contact Dunham-Bush, Inc., Marshalltown, Iowa					
10 SLINGER	C10038	C10038	C10038	C10038	C10038	C10038
11 SHIELD	C8958	C8958	C8958	C8958	C8958	C8958
12 GASKET *	A2-3020	A2-3020	A2-3020	A2-3020	A2-3020	A2-3020

NOTES: 1. NON-STANDARD pump parts are not shown. When ordering repair parts, refer to page 1 of this catalog.
2. * = These parts are required when replacing shaft seal.

892

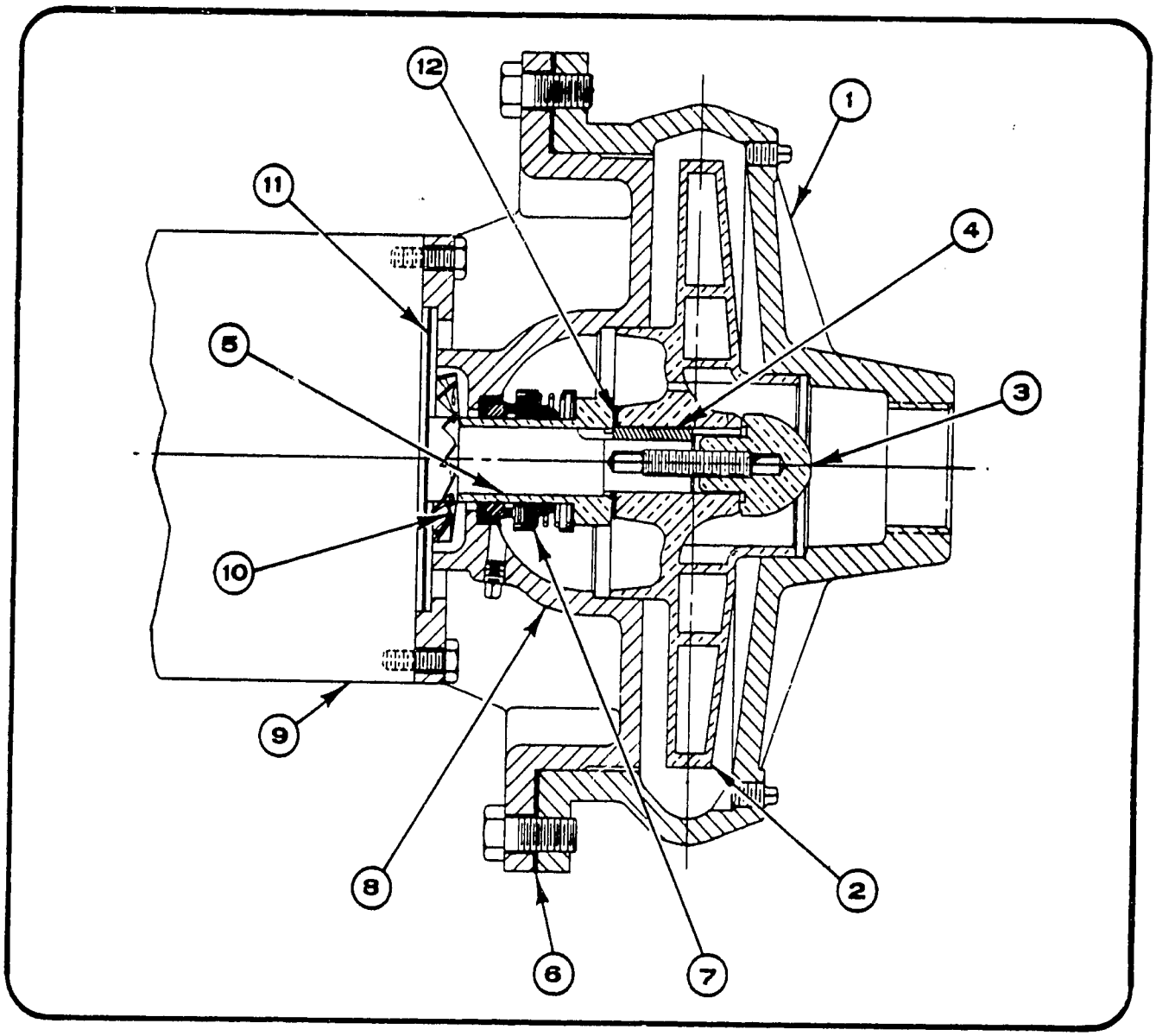

A9 PUMP AND PARTS LIST SERIES A – 5 HP

PART NUMBER AND DESCRIPTION	5 HP 1" 3ϕ A9C2A	5 HP 1" 3ϕ A9D2A	5 HP 1¼" 3ϕ A9D2A	5 HP 2" 3ϕ A9D1A	5 HP 2" 3ϕ A9D2A	5 HP 2½" 3ϕ A9D1A	5 HP 2½" 3ϕ A9D2A
1 CASE (CAST IRON) CASE (BRONZE)	F541 D2-76	F541 D2-76	F540 D2-74	F544 D2-80	F544 D2-80	F545 D2-79	F545 D2-79
2 IMPELLER (BRONZE)	C2-3211X $6^{9}/_{16}$"	C2-3212X $5^{7}/_{8}$"	C2-3213X $5^{15}/_{32}$"	C2-3214X $8^{7}/_{16}$"	C2-3214X $4^{15}/_{16}$"	C2-3215X $7^{15}/_{16}$"	C2-3215X $4^{3}/_{4}$"
3 STUD & NUT ASSEMBLY	C10035 A2-3898	C10035 A2-3898	C10035 A2-3898	C10035 A2-3899	C10035 A2-3899	C10035 A2-3899	C10035 A2-3899
4 KEY	C7763	C7763	C7763	C7763	C7763	C7763	C7763
5 SLEEVE *	A2-3905	A2-3905	A2-3905	A2-3905	A2-3905	A2-3905	A2-3905
6 GASKET *	D5450	D5450	D5450	D5450	D5450	D5450	D5450
7 SHAFT SEAL*	3179	3179	3179	3179	3179	3179	3179
8 HEAD (CAST IRON) HEAD (BRONZE)	D2-1478 D2-1480	D2-1478 D2-1480	D2-1478 D2-1480	D2-1478 D2-1480	D2-1478 D2-1480	D2-1478 D2-1480	D2-1478 D2-1480
9 MOTOR	Contact Dunham-Bush, Inc., Marshalltown, Iowa						
10 SLINGER	C10038	C10038	C10038	C10038	C10038	C10038	C10038
11 SHIELD	C8958	C8958	C8958	C8958	C8958	C8958	C8958
12 GASKET *	A2-3020	A2-3020	A2-3020	A2-3020	A2-3020	A2-3020	A2-3020

NOTES: 1. NON-STANDARD pump parts are not shown. When ordering repair parts, refer to page 1 of this catalog.
2. * = These parts are required when replacing shaft seal.

893

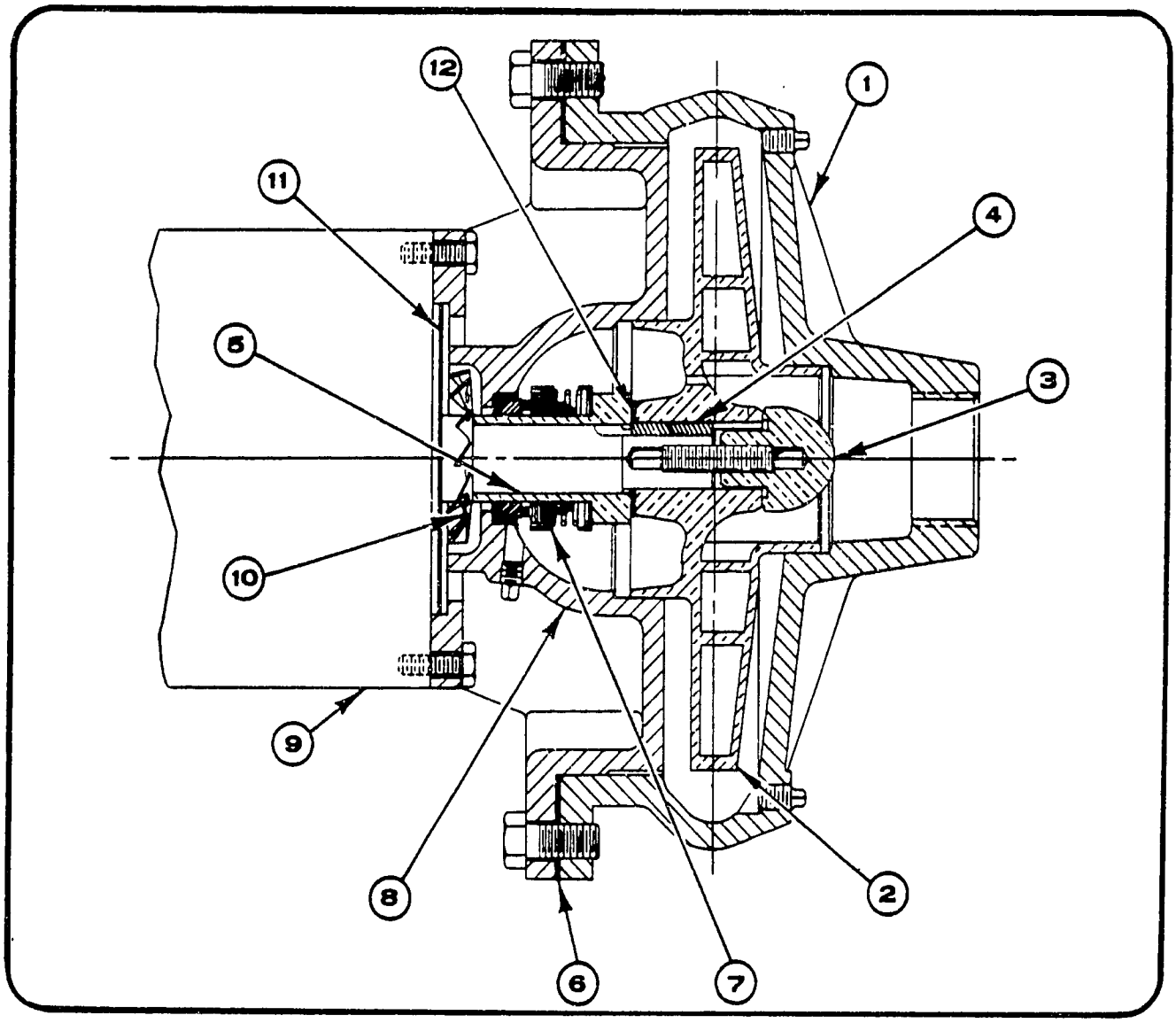

A9 PUMP AND PARTS LIST
SERIES A - 7½ HP

PART NUMBER AND DESCRIPTION		7½ HP 1¼" 3ϕ A9D2A	7½ HP 2" 3ϕ A9D2A	7½ HP 2½" 3ϕ A9D1A	7½ HP 2½" 3ϕ A9D1A
1	CASE (CAST IRON) CASE (BRONZE)	F540 D2-74	F544 D2-80	F545 D2-79	F545 D2-79
2	IMPELLER (BRONZE)	C2-3213X 5 15/16"	C2-3214X 5 9/16"	C2-3215X 9"	C2-3215X 5 5/16"
3	STUD & NUT ASSEMBLY	C10035 A2-3899	C10035 A2-3899	C10035 A2-3899	C10035 A2-3899
4	KEY	C7763	C7763	C7763	C7763
5	SLEEVE *	A2-3905	A2-3905	A2-3905	A2-3905
6	GASKET *	D5450	D5450	D5450	D5450
7	SHAFT SEAL*	3179	3179	3179	3179
8	HEAD (CAST IRON) HEAD (BRONZE)	D2-1478 D2-1480	D2-1478 D2-1480	D2-1481 D2-1483	D2-1478 D2-1480
9	MOTOR	Contact Dunham-Bush, Inc., Marshalltown, Iowa			
10	SLINGER	C1038	C1038	C1038	C1038
11	SHIELD	C8958	C8958	D5478	C8958
12	GASKET *	A2-3020	A2-3020	A2-3020	A2-3020

NOTES:
1. NON-STANDARD pump parts are not shown. When ordering repair parts, refer to page 1 of this catalog.
2. * = These parts are required when replacing shaft seal.

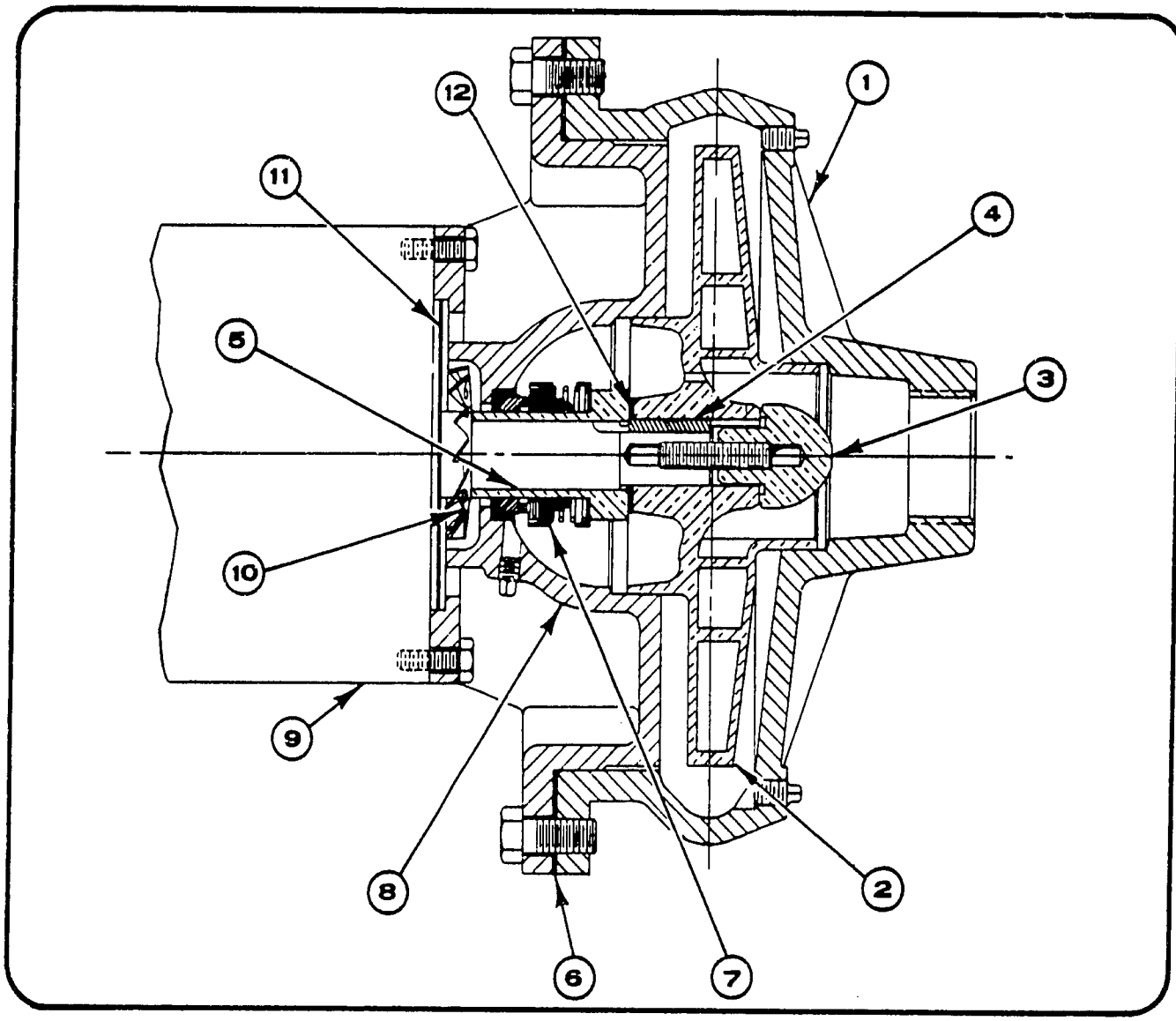

A9 PUMP AND PARTS LIST
SERIES A - 10 HP AND 15 HP

PART NUMBER AND DESCRIPTION	10 HP 1¼" 3ϕ A9D2A	10 HP 2" 3ϕ A9D2A	10 HP 2½" 3ϕ A9D2A	15 HP 2" 3ϕ A9D2A
1 CASE (CAST IRON) CASE (BRONZE)	F540 D2-74	F544 D2-80	F545 D2-79	F544 D2-80
2 IMPELLER (BRONZE)	C2-3213X $6^{3}/_{8}$"	C2-3214X $5^{29}/_{32}$"	C2-3215X $5^{21}/_{32}$"	C2-3214X $6^{5}/_{16}$"
3 STUD & NUT ASSEMBLY	C10035 A2-3899	C10035 A2-3899	C10035 A2-3899	C10035 A2-3899
4 KEY	C7763	C7763	C7763	C7763
5 SLEEVE *	A2-3905	A2-3905	A2-3905	A2-3905
6 GASKET *	D5450	D5450	D5450	D5450
7 SHAFT SEAL *	3179	3179	3179	3179
8 HEAD (CAST IRON) HEAD (BRONZE)	D2-1481 D2-1483	D2-1481 D2-1483	D2-1481 D2-1483	D2-1481 D2-1483
9 MOTOR	Contact Dunham-Bush, Inc., Marshalltown, Iowa			
10 SLINGER	C1038	C1038	C1038	C1038
11 SHIELD	D5478	D5478	D5478	D5478
12 GASKET *	A2-3020	A2-3020	A2-3020	A2-3020

NOTES: 1. NON-STANDARD pump parts are not shown. When ordering repair parts, refer to page 1 of this catalog.
2. * = These parts are required when replacing shaft seal.

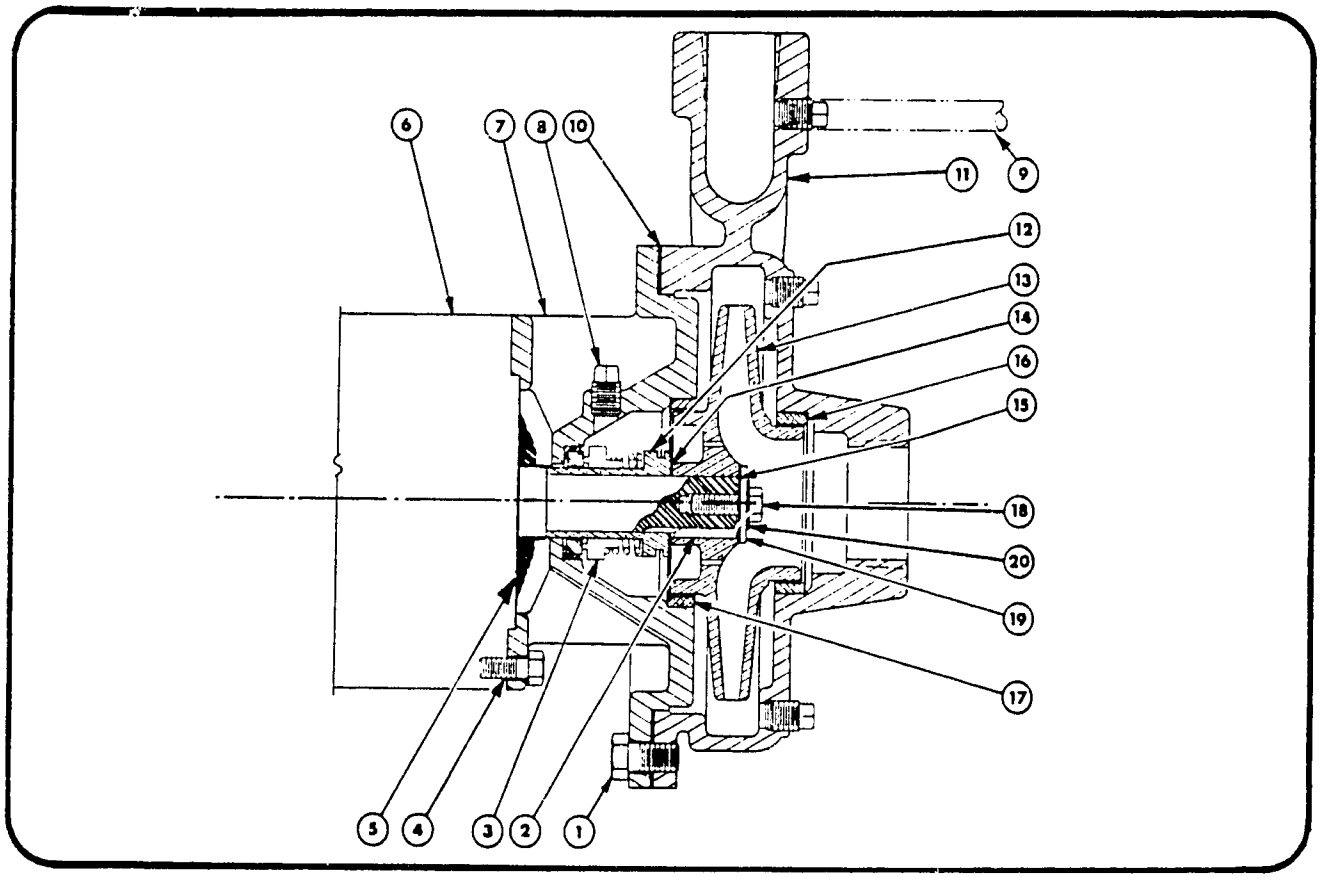

A7 PUMP AND PARTS LIST - ¾", 1¼" AND 1½" DIA. DISCHARGE

PART NUMBER & DESCRIPTION		¾" A7B	1¼" A7B	1¼" A7C	1½" A7B	1½" A7C
1.	Screw – Cap	P - 150				
2.	Key – Impeller	Supplied with Motor				
3.	Seal – Mechanical *	3179	3179	3179	3179	3179
	Seal – 250= Optional	Contact Dunham-Bush, Inc., Marshalltown, Iowa				
4.	Screw – Cap	P-142	P-142	P-150	P-142	P-150
5.	Slinger	Supplied with Motor				
6.	Motor	Contact Dunham-Bush, Inc., Marshalltown, Iowa				
7.	Head, C.I.	C2-2336	C2-2336	C2-2337	C2-2336	C2-2337
	Head, Bronze	C2-2660	C2-2660	C2-2661	C2-2660	C2-2661
	Head, C.I. w/wear Rings	C2-2345	C2-2345	C2-2346	C2-2345	C2-2346
8.	Fitting – Compression Straight	P - 194 (Optional)				
	Fitting – Elbow, Not shown	P - 195 (Optional)				
	Plug – Pipe	(5) P - 196				
9.	Tube	Copper 1/8" OD (Optional)				
10.	Gasket – Case *	C2-2343				
11.	Case, C.I.	C2-2390	C2-2335		C2-2377	
	Case, (Bronze)	C2-2665	C2-2666		C2-2667	
	Case, C.I. w/wear Rings	C2-2389	C2-2347		C2-2376	
	Case, 250= C.I.	Not Available				
	Case, 250= Bronze	Not Available				
	Case, 250= C.I. w/wear Rings	Not Available				
12.	Sleeve *	A2-3018	A2-3018	A2-3018	A2-3018	A2-3018
	Seal – 250= Optional	Contact Dunham-Bush, Inc., Marshalltown, Iowa				
13.	Impeller	C2-2378	C2-2340	C2-2340	C2-2380	C2-2380
14.	Gasket (Impeller – Sleeve) *	A2-3020	A2-3020	A2-3020	A2-3020	A2-3020
15.	Gasket (Impeller – Head) *	A2-3022-1				
16.	Ring – Case Wear Ring	A2-3026	A2-3015		A2-3027	
17.	Ring – Head Wear Ring	A2-3016				
18.	Screw – Impeller	3312	3312	3312	3312	3312
19.	Washer – Impeller	A2-3021-1				
20.	Washer – Sealing	3313	3313	3313	3313	3313

NOTES:
1. NON-STANDARD pump parts are not shown. When ordering repair parts, refer to page 1 of this catalog.
2. * = These parts are required when replacing shaft seal.

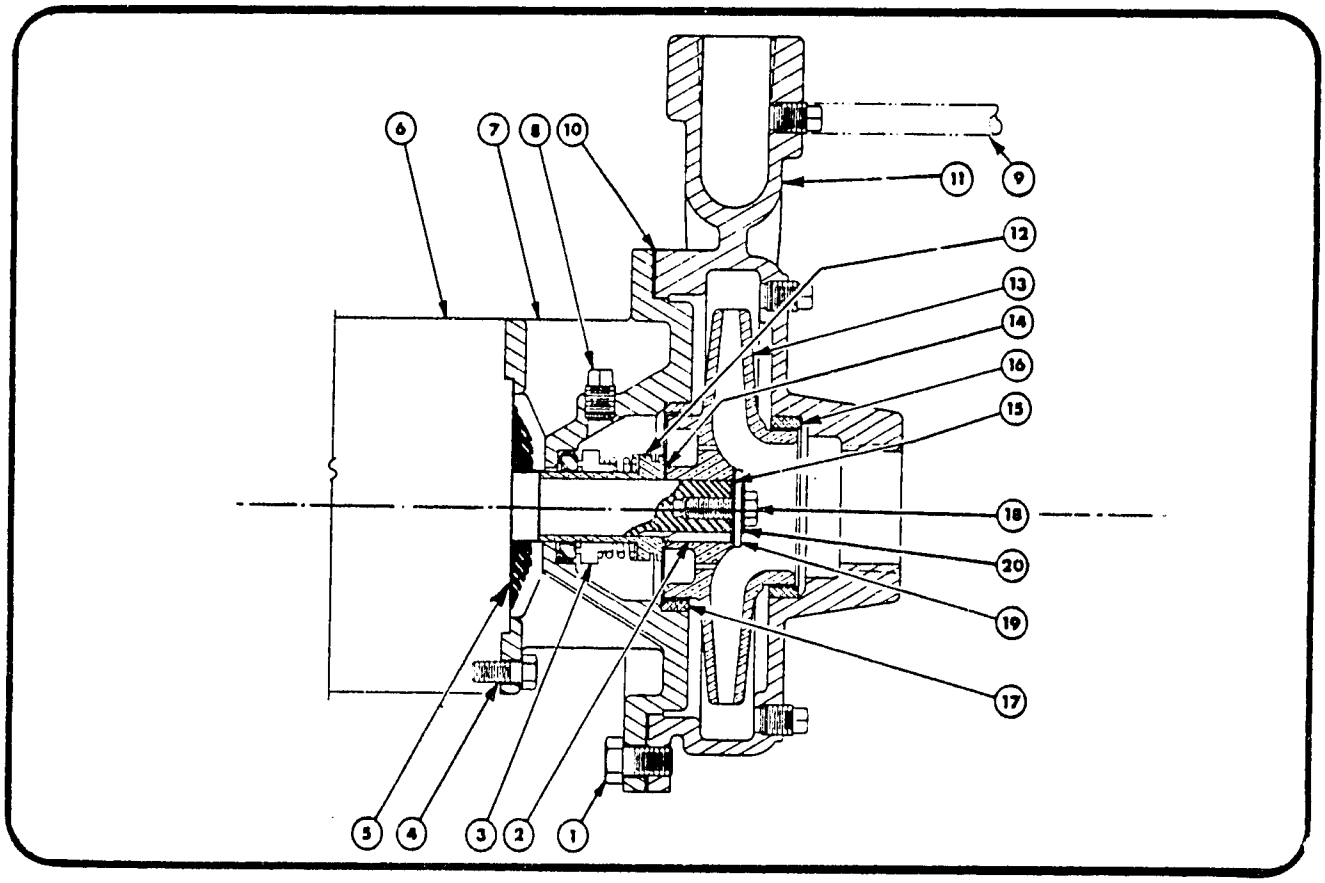

A7 PUMP AND PARTS LIST – 2" AND 2½" DIA. DISCHARGE

PART NUMBER & DESCRIPTION		2" A7D	2" A7E	2" A7F	2½" A7D	2½" A7E	2½" A7E H.C.	2½" A7F
1.	Screw – Cap	P - 150						
2.	Key – Impeller	Supplied with Motor						
3.	Seal – Mechanical *	3179	3179	3291	3179	3179	3179	3291
	Seal – 250# Optional	Contact Dunham-Bush, Inc., Marshalltown, Iowa						
4.	Screw – Cap	P - 142	P - 150	P - 150	P - 142	P - 150	P - 150	P - 150
5.	Slinger	Supplied with Motor						
6.	Motor	Contact Dunham-Bush, Inc., Marshalltown, Iowa						
7.	Head, C.I.	C2-2384	C2-2386	C2-2388	C2-2384	C2-2386	C2-2386	C2-2388
	Head, Bronze	C2-2662	C2-2663	C2-2664	C2-2662	C2-2663	C2-2663	C2-2664
	Head, C.I. w/wear rings	C2-2383	C2-2385	C2-2387	C2-2383	C2-2385	C2-2385	C2-2387
8.	Fitting – Compression Straight	P - 194 (Optional)						
	Fitting – Elbow, Not shown	P - 195 (Optional)						
	Plug – Pipe	(5) P - 196						
9.	Tube	Copper 1/8" OD (Optional)						
10.	Gasket – Case *	C2-2343						
11.	Case, C.I.	D2-1274			D2-1276			
	Case, (Bronze)	D2-1352			D2-1355			
	Case, C.I. w/wear rings	D2-1273			D2-1275			
	Case, 250# C.I.	Not Available						
	Case, 250# Bronze	Not Available						
	Case, 250# C.I. w/wear rings	Not Available						
12.	Sleeve *	A2-3018	A2-3018	A2-3025	A2-3018	A2-3018	A2-3018	A2-3025
	Seal – 250# Optional	Contact Dunham-Bush, Inc., Marshalltown, Iowa						
13.	Impeller	C2-2381	C2-2381	C2-2382	C2-2381	C2-2381	C2-2392	C2-2382
14.	Gasket (Impeller – Sleeve) *	A2-3020	A2-3020	A2-3029	A2-3020	A2-3020	A2-3020	A2-3029
15.	Gasket (Impeller – Head) *	A2-3021-1		A2-3022-2	A2-3022-1			A2-3022-2
16.	Ring – Case Wear Ring	A2-3028						
17.	Ring – Head Wear Ring	A2-3016						
18.	Screw – Impeller	3312	3312	3292	3312	3312	3312	3292
19.	Washer – Impeller	A2-3021-1		A2-3021-2	A2-3021-1			A2-3021-2
20.	Washer – Sealing	3313	3313	3293	3313	3313	3313	3293

NOTES: 1. NON-STANDARD pump parts are not shown. When ordering repair parts, refer to page 1 of this catalog.
2. * = These parts are required when replacing shaft seal.

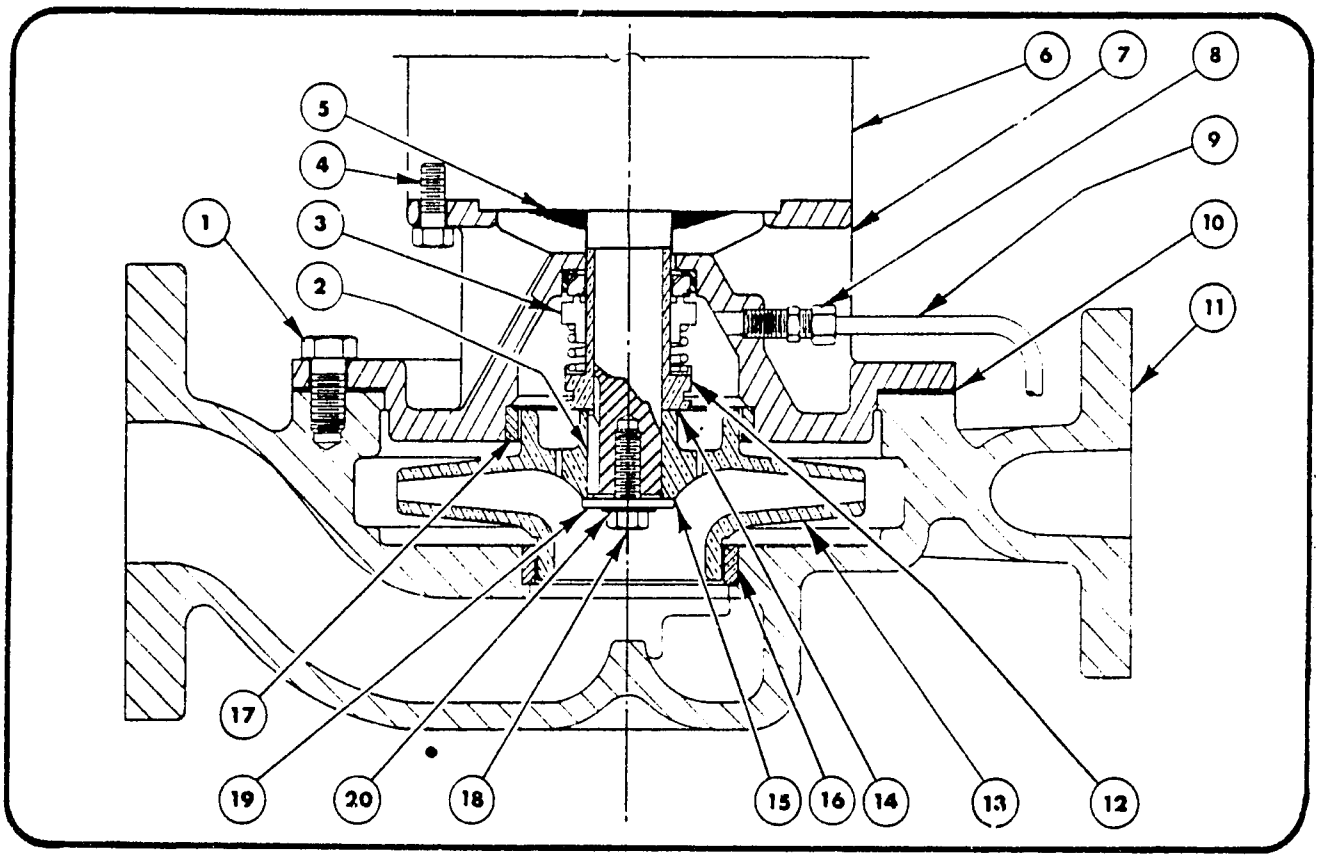

PM7 PUMP AND PARTS LIST – 1", 1¼" AND 1½" DIA. DISCHARGE

PART NUMBER & DESCRIPTION		1" PM7B	1¼" PM7B	1¼" PM7C	1½" PM7B	1½" PM7C
1.	Screw - Cap	P - 150				
2.	Key - Impeller	Supplied with Motor				
3.	Seal - Mechanical *	3179	3179	3179	3179	3179
	Seal 250# Optional	Contact Dunham-Bush, Inc. – Marshalltown, Iowa				
4.	Screw - Cap	P - 142	P - 142	P - 150	P - 142	P - 150
5.	Slinger	Supplied with Motor				
6.	Motor	Contact Dunham-Bush, Inc. – Marshalltown, Iowa				
7.	Head, C.I.	C2-2336	C2-2336	C2-2337	C2-2336	C2-2337
	Head, (Bronze)	C2-2660	C2-2660	C2-2661	C2-2660	C2-2661
	Head, C.I. w/wear rings	C2-2345	C2-2345	C2-2346	C2-2345	C2-2346
8.	Fitting - Compression Straight	P-194				
	Fitting - Elbow – Not shown	P-195				
	Plug - Pipe	(1) P-196				
9.	Tube	Copper 1/8" OD				
10.	Gasket - Case *	C2-2343				
11.	Case, C.I.	D2-1268	D2-1256	D2-1256	D2-1266	D2-1266
	Case, (Bronze)	D2-1346	D2-1348	D2-1348	D2-1350	D2-1350
	Case, C.I. w/wear rings	D2-1267	D2-1255	D2-1255	D2-1265	D2-1265
	Case, 250# C.I.	D2-1299	D2-1301	D2-1301	D2-1303	D2-1303
	Case, 250# Bronze	D2-1347	D2-1349	D2-1349	D2-1351	D2-1351
	Case, 250# C.I. w/wear rings	D2-1300	D2-1302	D2-1302	D2-1304	D2-1304
12.	Sleeve *	A2-3018	A2-3018	A2-3018	A2-3018	A2-3018
	Seal 250# Optional	Contact Dunham-Bush, Inc. – Marshalltown, Iowa				
13.	Impeller	C2-2379	C2-2340	C2-2340	C2-2380	C2-2380
14.	Gasket (Impeller - Sleeve) *	A2-3020	A2-3020	A2-3020	A2-3020	A2-3020
15.	Gasket (Impeller - Head) *	A2-3022-1				
16.	Ring - Case Wear Ring	A2-3026	A2-3015	A2-3015	A2-3027	A2-3027
17.	Ring - Head Wear Ring	A2-3016				
18.	Screw - Impeller	3312				
19.	Washer - Impeller	A2-3021-1				
20.	Washer - Sealing	3313				

NOTES:
1. NON-STANDARD pump parts are not shown. When ordering repair parts, refer to page 1 of this catalog.
2. * = These parts are required when replacing shaft seal.

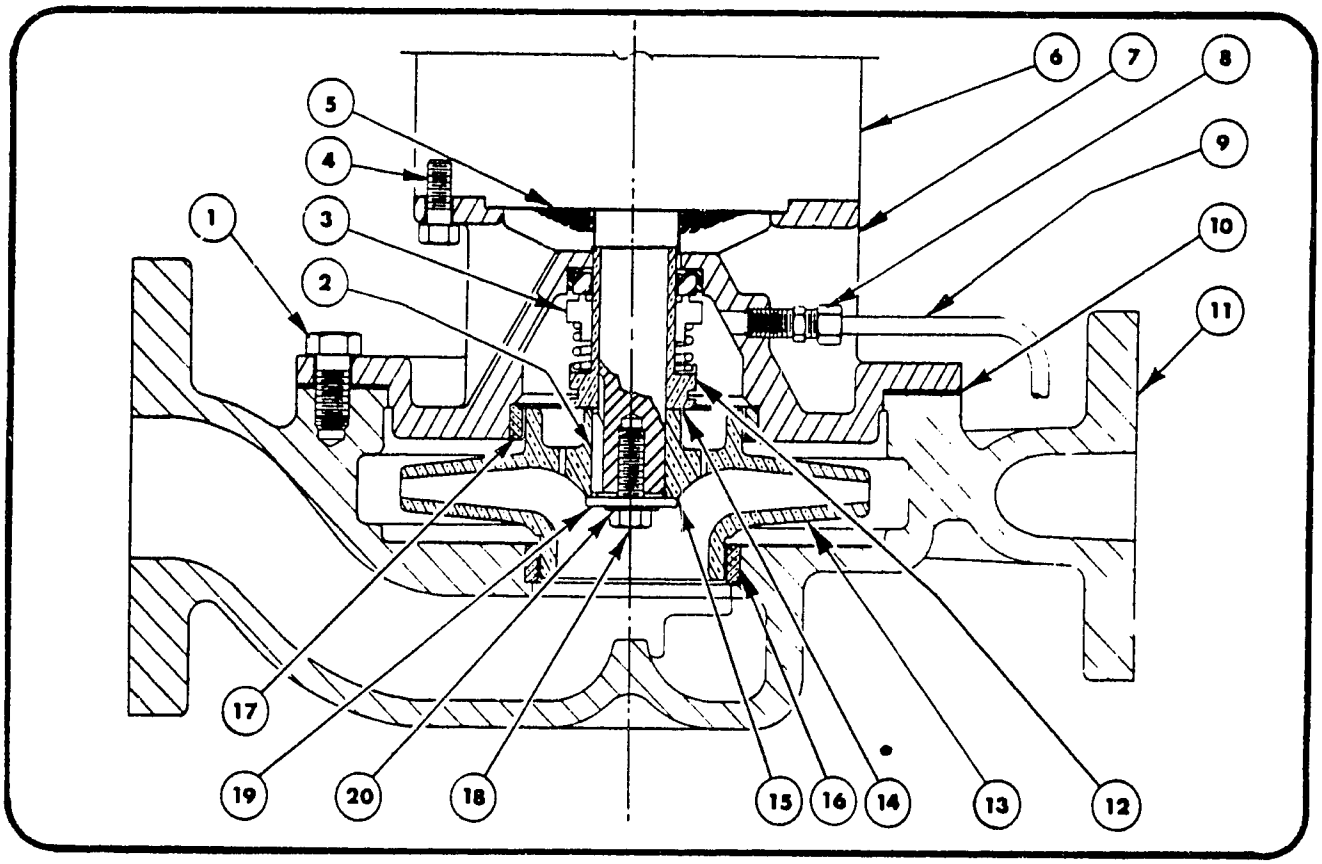

PM7 PUMP AND PARTS LIST – 2" AND 2½" DIA. DISCHARGE

PART NUMBER & DESCRIPTION		2" PM7D	2" PM7E	2" PM7F	2½" PM7D	2½" PM7E	2½" PM7E H.C.	2½" PM7F
1.	Screw - Cap	P - 150						
2.	Key - Impeller	Supplied with Motor						
3.	Seal - Mechanical *	3179	3179	3291	3179	3179	3179	3291
	Seal 250# Optional	Contact Dunham-Bush, Inc. – Marshalltown, Iowa						
4.	Screw - Cap	P - 142	P - 150	P - 150	P - 142	P -150	P - 150	P -150
5.	Slinger	Supplied with Motor						
6.	Motor	Contact Dunham-Bush, Inc. – Marshalltown, Iowa						
7.	Head, C.I.	C2-2384	C2-2386	C2-2388	C2-2384	C2-2386	C2-2386	C2-2388
	Head, (Bronze)	C2-2662	C2-2663	C2-2664	C2-2662	C2-2663	C2-2663	C2-2664
	Head, C.I. w/wear rings	C2-2383	C2-2385	C2-2387	C2-2383	C2-2385	C2-2385	C2-2387
8.	Fitting - Compression Straight	P-194						
	Fitting - Elbow – Not Shown	P-195						
	Plug - Pipe	(1) P-196						
9.	Tube	Copper 1/8" OD						
10.	Gasket - Case *	C2-2343						
11.	Case, C.I.	D2-1270			D2-1272			
	Case, (Bronze)	D2-1269			D2-1356			
	Case, C.I. w/wear rings	D2-1353			D2-1271			
	Case, 250# C.I.	D2-1305			D2-1307			
	Case, 250# Bronze	D2-1354			D2-1357			
	Case, 250# C.I. w/wear rings	D2-1306			D2-1308			
12.	Sleeve *	A2-3018	A2-3018	A2-3025	A2-3018	A2-3018	A2-3018	A2-3025
	Seal 250# Optional	Contact Dunham-Bush, Inc. – Marshalltown, Iowa						
13.	Impeller	C2-2381	C2-2381	C2-2382	C2-2381	C2-2381	C2-2392	C2-2382
14.	Gasket (Impeller - Sleeve) *	A2-3020	A2-3020	A2-3029	A2-3020	A2-3020	A2-3020	A2-3029
15.	Gasket (Impeller - Head)	A2-3022-1		A2-3022-2	A2-3022-1			A2-3022-2
16.	Ring - Case Wear Ring	A2-3028						
17.	Ring - Head Wear Ring	A2-3016						
18.	Screw - Impeller	3312		3292	3312			3292
19.	Washer - Impeller	A2-3021-1		A2-3021-2	A2-3021-1			A2-3021-2
20.	Washer - Sealing	3313		3293	3313			3293

NOTES: 1. NON-STANDARD pump parts are not shown. When ordering repair parts, refer to page 1 of this catalog.
2. * = These parts are required when replacing shaft seal.

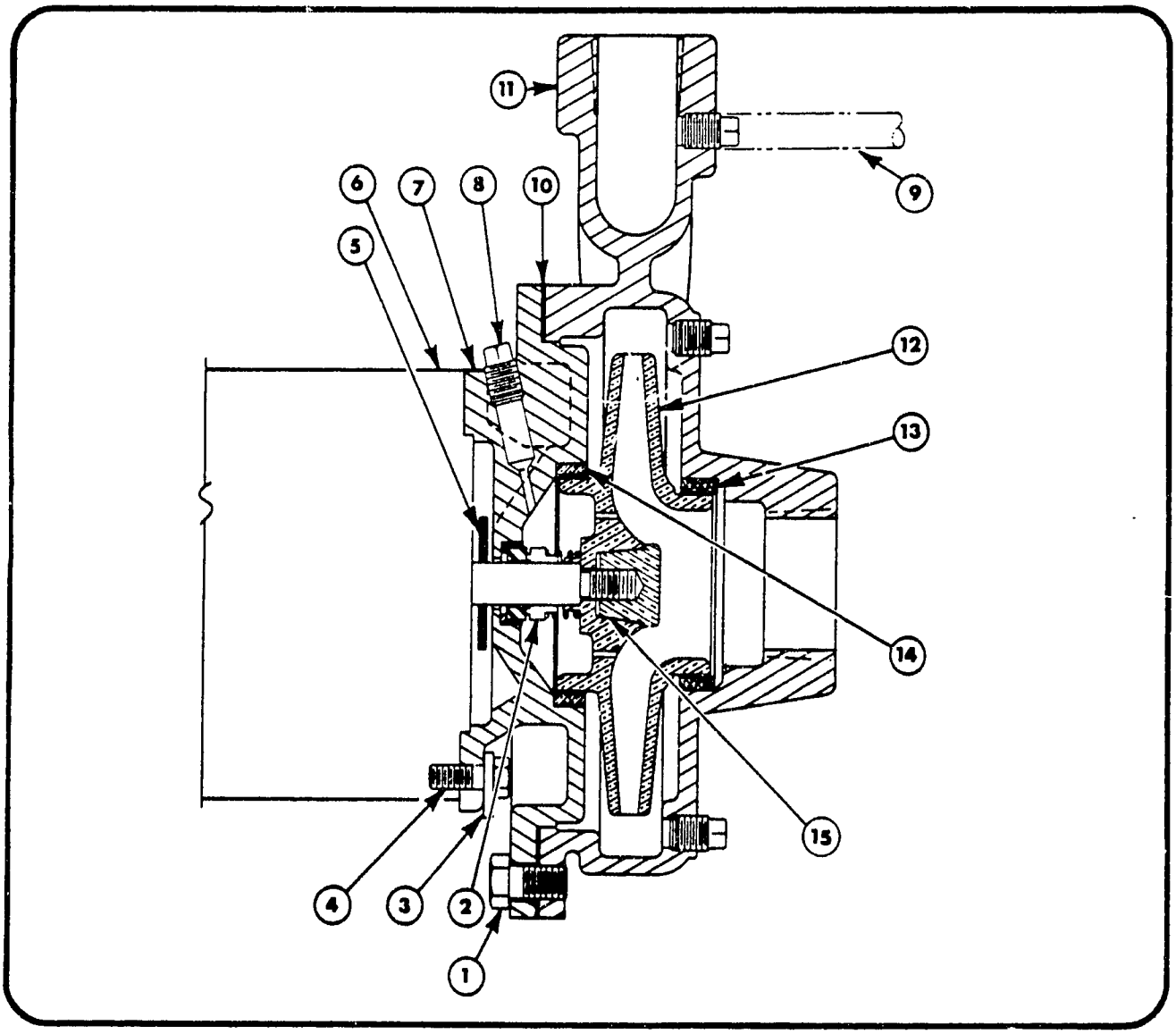

A7A PUMP AND PARTS LIST– ¾", 1¼" AND 1½" DIA. DISCHARGE

	PART NUMBER & DESCRIPTION	¾" A7A	1¼" A7A	1½" A7A
1.	Screw–Cap	P - 150	P - 150	P - 150
2.	Seal–Mechanical *	472	472	472
3.	Retainer–Head	A2-3023	A2-3023	A2-3023
4.	Screw–Cap	P - 142	P - 142	P - 142
5.	Slinger	C8854	C8854	C8854
6.	Motor	Contact Dunham-Bush, Inc. Marshalltown, Iowa		
7.	Head, C.I.	C2-2342	C2-2342	C2-2342
	Head, Bronze	C2-2659	C2-2659	C2-2659
	Head, C.I. w/wear rings	C2-2344	C2-2344	C2-2344
8.	Fitting – Compression Straight	P - 194 (Optional)		
	Fitting – Elbow (Not Shown)	P - 195 (Optional)		
	Plug–Pipe	(5) P - 196		
9.	Tube	Copper 1/8" OD (Optional)		
10.	Gasket–Case *	C2-2343	C2-2343	C2-2343
11.	Case, C.I.	C2-2390	C2-2335	C2-2377
	Case, Bronze	C2-2665	C2-2666	C2-2667
	Case, C.I. w/wear rings	C2-2389	C2-2347	C2-2376
12.	Impeller	C2-2378	C2-2339	C2-2498
13.	Ring – Case Wear Ring	A2-3026	A2-3015	A2-3027
14.	Ring – Head Wear Ring	A2-3016	A2-3016	A2-3016
15.	Screw–Impeller	A2-3691	A2-3691	A2-3691

NOTES: 1. NON-STANDARD pump parts are not shown. When ordering repair parts, refer to page 1 of this catalog.
2. * = These parts are required when replacing shaft seal.

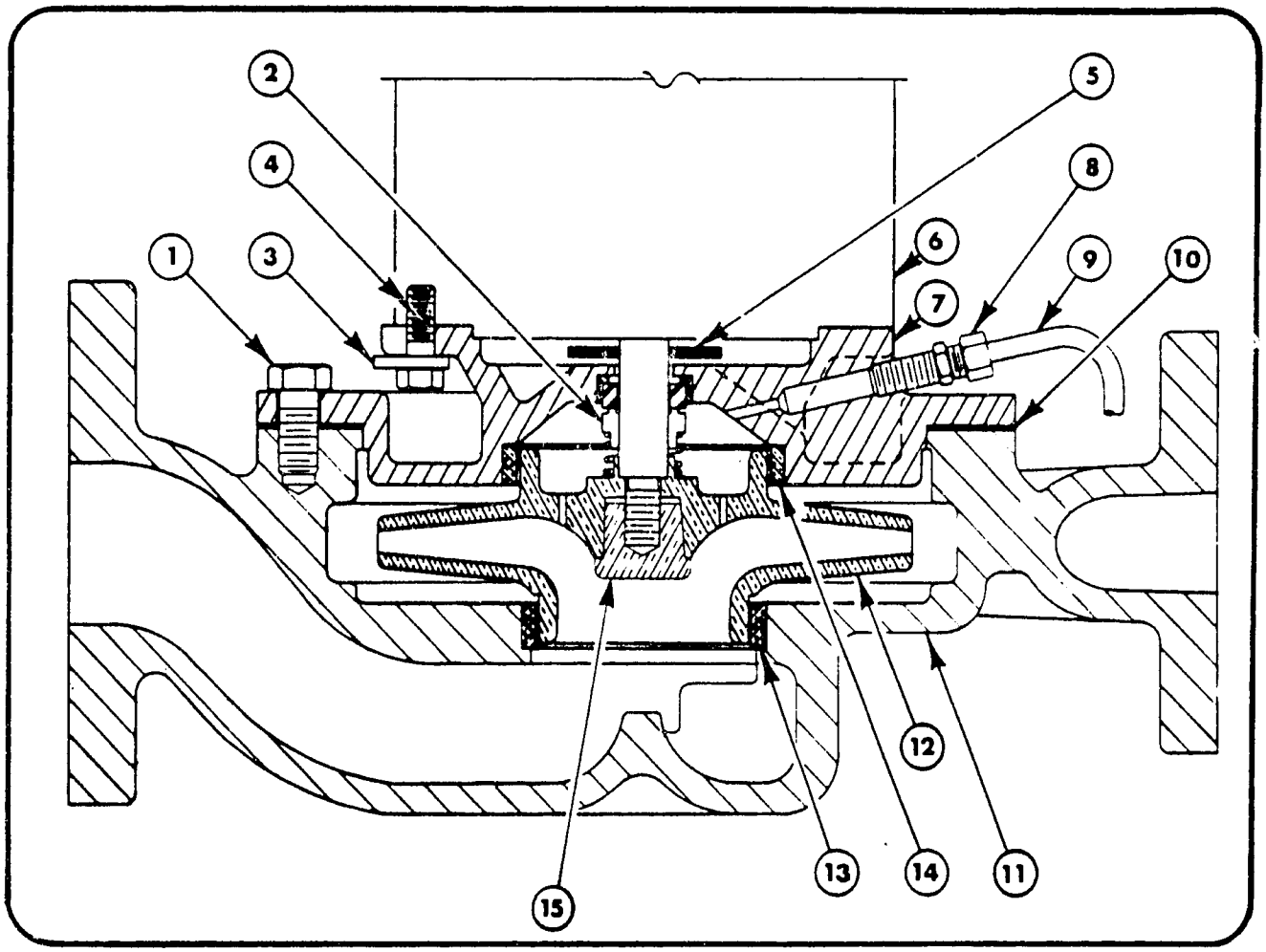

PM7A PUMP AND PARTS LIST
1", 1¼" AND 1½" DIA. DISCHARGE

PART NUMBER & DESCRIPTION		1" PM7A	1¼" PM7A	1½" PM7A
1.	Screw—Cap	P - 150	P - 150	P - 150
2.	Seal—Mechanical *	472	472	472
3.	Retainer—Head	A2-3023	A2-3023	A2-3023
4.	Screw—Cap	P - 142	P - 142	P - 142
5.	Slinger	C8854	C8854	C8854
6.	Motor	Contact Dunham-Bush, Inc., Marshalltown, Iowa		
7.	Head, C.I.	C2-2342	C2-2342	C2-2342
	Head, Bronze	C2-2659	C2-2659	C2-2659
	Head, C.I. w/wear rings	C2-2344	C2-2344	C2-2344
8.	Fitting—Compression Straight	P - 194		
	Fitting—Elbow (Not Shown)	P - 195		
	Plug—Pipe	(1) P - 196		
9.	Tube	Copper 1/8" OD		
10.	Gasket—Case *	C2-2343	C2-2343	C2-2343
11.	Case, C.I.	D2-1268	D2-1256	D2-1266
	Case, Bronze	D2-1346	D2-1348	D2-1350
	Case, C.I. w/wear rings	D2-1267	D2-1255	D2-1265
	Case, 250# C.I.	D2-1299	D2-1301	D2-1303
	Case, 250# Bronze	D2-1347	D2-1349	D2-1351
	Case, 250# C.I. w/wear rings	D2-1300	D2-1302	D2-1304
12.	Impeller	C2-2378	C2-2339	C2-2498
13.	Ring—Case Wear Ring	A2-3026	A2-3015	A2-3027
14.	Ring—Head Wear Ring	A2-3016	A2-3016	A2-3016
15.	Nut—Impeller	A2-3691	A2-3691	A2-3691

NOTES: 1. NON-STANDARD pump parts are not shown. When ordering repair parts, refer to page 1 of this catalog.
2. * = These parts are required when replacing shaft seal.

DUNHAM-BUSH

AIR CONDITIONING, REFRIGERATION, HEATING PRODUCTS AND ACCESSORIES

MAIN OFFICES AND FACTORIES

MAIN OFFICES
175 South Street
West Hartford, Connecticut
06110

WEST HARTFORD DIVISION
179 South Street
West Hartford, Connecticut
06110

HARRISONBURG DIVISION
101 Burgess Road
Harrisonburg, Virginia
22801

MARSHALLTOWN DIVISION
811 East Main Street
Marshalltown, Iowa
50158

SUBSIDIARIES

DUNHAM-BUSH of Canada Limited
140 Wendell Avenue
Weston, Ontario

DUNHAM-BUSH, LTD.
Fitzherbert Road, Farlington
Portsmouth, Hampshire, England

DUNHAM-BUSH INTERNATIONAL: 175 South Street, West Hartford, Connecticut 06110, U.S.A.
CABLE: DUNBUSH or TELEX: 994469

SALES OFFICES

ALABAMA
Birmingham
Mobile

ARIZONA
Phoenix

ARKANSAS
Little Rock

CALIFORNIA
Arcadia
Los Angeles
San Diego
San Francisco

COLORADO
Denver

CONNECTICUT
Hartford
New Haven

FLORIDA
Jacksonville
Miami
Orlando
Tampa

GEORGIA
Atlanta

HAWAII
Honolulu

ILLINOIS
Chicago
Peoria
Rockford

INDIANA
Indianapolis
Michigan City

IOWA
DesMoines

KANSAS
Lenexa

KENTUCKY
Louisville

LOUISIANA
New Orleans
Shreveport

MAINE
Lewiston

MARYLAND
Baltimore
Silver Spring

MASSACHUSETTS
Boston
Springfield

MICHIGAN
Detroit
Grand Rapids
Kalamazoo

MINNESOTA
Minneapolis

MISSISSIPPI
Jackson

MISSOURI
Kansas City
St. Louis

MONTANA
Billings
Great Falls

NEBRASKA
Omaha

NEW JERSEY
Little Falls
South Amboy
Union

NEW MEXICO
Albuquerque

NEW YORK
Albany
Buffalo
New York City
Rochester
Syracuse

NORTH CAROLINA
Charlotte
Greensboro

OHIO
Akron
Cincinnati
Cleveland
Columbus
Dayton
Delaware
Toledo

OKLAHOMA
Oklahoma City
Tulsa

OREGON
Portland

PENNSYLVANIA
Harrisburg
Philadelphia

PENNSYLVANIA (Cond't)
Pittsburgh
Pittston

RHODE ISLAND
Providence

SOUTH CAROLINA
Columbia
Greenville

TENNESSEE
Chattanooga
Memphis
Knoxville
Nashville

TEXAS
Austin
Corpus Christie
Dallas
Fort Worth
El Paso
Houston
Lubbock
San Antonio

UTAH
Salt Lake City

VIRGINIA
Alexandria
Richmond

WASHINGTON
Seattle
Spokane

WEST VIRGINIA
Barboursville

WISCONSIN
Milwaukee

DUNHAM-BUSH, INC. • West Hartford, Connecticut 06110, U.S.A.

2505B-7.5M-567A-1177B

one of The Signal Companies

Exhibit G-3

DUNHAM-BUSH

PCX/DBX CONSOLIDATED PARTS PRICE LIST

Refer to latest revision of Form 1278 for Terms of Sale.

Terms of Shipment: F.O.B. Shipping Point.

All prices subject to change without notice.

Parts will be invoiced at prices in effect at the time of shipment.

All components and controls listed are for standard units only, unless otherwise noted.

Minimum Billing is $25.00.

ORDERING INSTRUCTIONS

1. When ordering, specify Model, Serial No., "X" No., and other pertinent information on the face of the order.
2. Parts selections should be made from the "RPL" furnished with the unit where possible. For convenience, we have included several pages listing field replacement kits with a brief description of each at the back of this form.
3. Send all orders to: Dunham-Bush, Inc., Service Parts Dept.
   179 South St., West Hartford, Conn. 06110
4. All prices are for one each part or kit as applicable.
5. Federal, state, local or other taxes are not included in the attached prices.
6. All orders requiring Special Handling, will have a $50 net additional charge invoiced or actual cost, whichever is higher. This includes delivery to the airport, bus station, etc.

PART NO.	DESCRIPTION	LIST PRICE
BKR74	CIRCUIT BREAKER	28.62
BKR75	CIRCUIT BREAKER	28.62
BLK41	DRIER BLOCK	59.57
BLK42	DRIER BLOCK	23.59
CNT55	CONTROL, TEMP	70.18
CNT137T1	CONTROL, MTR PRT	100.17
CNT167	CONTROL, LOW PRESS	69.22
CNT175	CONTROL, DUAL PRESS	88.03
CNT206	CONTROL, TEMP	63.55
CNT208	CONTROL, TEMP	1,020.13
CNT231	CONTROL, TEMP	87.82
CNT232	CONTROL, TLC	963.31
CNT233T1	CONT SENR 35/55DEG	101.28
CNT233T2	CONT SENR 55/75DEG	241.88
CNT233T3	CONT SENR-35/-15DEG	223.71
CNT233T5	CONT SENR-15/10DEG	258.84
CNT233T5	CONT SENSR 10/35DEG	258.84
CNT242	CONTROL, LOW PRESS	64.13
CNT244	CONTROL, TEMP	67.89
CNT249	CONTROL, PRESS-DIFF	514.00
CNT276	CONTROL, PRESS	274.06
CNT277	CONTROL, PRESS	592.60
COL122T1	COIL 120V	28.62
COL122T40	COIL 120V	28.62
COL122T41	COIL 24V	28.62
COL123T1	COIL 120V	33.39
FLR47A	FILTER, SUCTION	87.42
FLR48A	FILTER, SUCTION	125.95
FLR49A	FILTER, SUCTION	102.78
FLR71	FILTER, OIL	22.79
FLR95T1	FILTER, SUCTION 4	243.28
FLR95T2	FILTER, SUCTION 5	307.33
FLR95T3	FILTER, SUCTION 8	390.80
FLR107T1	FILTER, OIL	400.88
FLR107T2	FILTER, OIL	489.70
FLR125	FILTER, OIL	36.06
GAG40	GAUGE	34.19
GAG41	GAUGE	34.19
GAG52	GAUGE	99.38
GKT143	GASKET	15.42
GKT222	GASKET	20.50
GKT223	GASKET	15.70
GKT224	GASKET	6.54
GKT229	GASKET	5.14
GKT238	GASKET	.60
GKT242	GASKET	17.56
GKT243	GASKET	24.38
GKT248	GASKET	5.95
GKT250	GASKET	2.73
GKT252	GASKET	7.02
GKT257	GASKET	4.61
GKT258	GASKET	3.34
GKT259	GASKET	25.05
GKT260	GASKET	27.78
GKT261	GASKET	21.37
GKT265	GASKET	40.07
GKT266	GASKET	16.70
GKT267	GASKET	2.87
GKT269	GASKET	1.34
GKT279	GASKET	52.15
GKT280	GASKET	52.15
GKT313	GASKET	21.43
GKT314	GASKET	5.54
GKT318	GASKET	13.70
GKT329	GASKET	1.40
GKT334	GASKET	3.68
GKT350T1	GASKET	15.62
GKT350T2	GASKET	21.23
GKT350T3	GASKET	40.07
GKT350T4	GASKET	33.59
GKT350T5	GASKET	36.67
GKT380	GASKET	8.15
GKT382	GASKET	18.09
GKT383	GASKET	8.75
GKT387	GASKET	21.71
GKT415	GASKET	10.48
GKT416	GASKET	9.41
GKT417	GASKET	8.75
GKT427	GASKET	30.05
GKT429T1	GASKET	70.12
GKT429T2	GASKET	70.12
GKT431T1	GASKET	55.43
GKT431T2	GASKET	52.43
GKT433T1	GASKET	61.78
GKT433T2	GASKET	61.78
GKT435T1	GASKET	80.80
GKT435T2	GASKET	80.80
GKT446	GASKET	14.09
GKT447	GASKET	14.89
GKT448	GASKET	12.36
GKT466	GASKET	11.35
GKT467	GASKET	11.62
GKT468	GASKET	11.09
GKT503	GASKET	83.48

PART NO.	DESCRIPTION	LIST PRICE
GKT504	GASKET	89.16
GKT505	GASKET	101.84
GKT506	GASKET	111.86
GKT507	GASKET	115.20
GKT508	GASKET	81.20
GKT509	GASKET	86.81
GKT510	GASKET	100.17
GKT511	GASKET	110.19
GKT512	GASKET	113.53
GKT117	GASKET	1.20
GLS16A	SIGHT GLASS ASSY	38.00
HTR71	HEATER, OIL	134.43
IDR48	INDICATOR, LIQ 5/8	21.78
IDR49	INDICATOR, LIQ 7/8	21.78
IDR56A	IND ASSY, LESS SCALE	170.89
IDR57A	IND ASSY, LESS SCALE	183.51
KIT250	KIT, CAM SWITCH	59.96
LMP10	LIGHT, RED	10.60
LMP11	LIGHT, YELLOW	10.60
LMP12	LIGHT, WHITE	10.60
LMP13	LIGHT, WHITE	9.06
LMP14	LIGHT, AMBER	13.04
LMP15	LIGHT, RED	11.50
PMP91T3	PUMP OIL VIKING	1,444.99
PMP91T4	PUMP, OIL VIKING	1,689.59
PMP91T6	PUMP, OIL VIKING	2,212.64
RLY126	RELAY	140.77
RLY127	RELAY	193.50
RLY129	RELAY	99.22
RLY133	RELAY	19.29
RLY134	RELAY	27.40
RLY135	RELAY FLIP PACK	145.75
RNG104	RING	2.20
RNG129	RING	30.98
RNG130	RING	23.11
RNG13	RING	32.39
RNG132	RING	32.52
RNG135	RING	1.06
RNG136	RING	7.53
RNG144	RING	5.09
RNG145	RING	4.56
RNG146	RING	5.09
RNG147	RING	7.37
RNG148	RING	3.07
RNG162	RING	40.07
RNG164	RING	17.36
RNG165	RING	4.67
RNG166	RING	1.96
RNG167	RING	1.01
RNG170	RING	42.88
RNG173	RING	31.59
RNG181	RING	28.92
RNG182	RING	19.71
RNG202	RING	2.23
RNG203	RING	24.17
RNG204	RING	.21
RNG205	RING	2.44
RNG206	RING	1.86
RNG207	RING	3.23
RNG209	RING	4.45
RNG210	RING	3.02
RNG211	RING	3.66
RNG217T3	RING	7.10
RNG217T4	RING	99.85
RNG217T5	RING	193.34
RNG229	RING	41.18
RNG230	RING	1.27
RNG236	RING	.95
RNG237	RING	.80
RNG238	RING	.95
RNG239	RING	.80
RNG255	RING	1.70
RNG256	RING	.69
RNG275	RING	.42
RNG282T2	RING	3.60
RNG283T3	RING	5.19
RNG283T4	RING	3.98
RNG293	RING	.42
RNG294T1	RING	5.57
SRA46T1	STRAINER, OIL	66.78
SRA52	STRAINER, OIL	43.99
SRA64A	STRAINER ASSY, OIL	FACTORY
SRA79A	STRAINER ASSY, OIL	FACTORY
SRA80A	STRAINER ASSY, OIL	FACTORY
SWT61	SWITCH, FLOW	104.78
SWT71	SWITCH, AUX	6.89
SWT80	SWITCH, PRESS-DIFF	422.30
SWT82	SWITCH	42.98
SWT83	SWITCH	16.96
SWT89	SWITCH, REED	41.27
SWT91	SWITCH	56.94
TMR79	TIMER, ELAPSED	20.78
TMR83	TIMER	351.92
TMR103	TIMER	162.88

404

PART NO.	DESCRIPTION	LIST PRICE
TMR105	TIMER	58.41
TMR106	TIMER	489.72
TMR110	TIMER	73.50
TMR114	TIMER	160.80
TMR135	TIMER	64.55
TOL1	TOOL,INNER LKNUT 163	298.18
TOL2	TOOL,INNER LKNUT 204	292.17
TOL3	TOOL,INNER LKNUT 255	440.00
TOL4	TOOL,LOCKNUT SPINDLE	170.29
TOL5	TOOL,BEARING LOCKNUT	1,402.38
TOL6	TOOL,OUTER NUT 163	292.17
TOL7	TOOL,OUTER NUT 204	347.26
TOL8	TOOL,OUTER NUT 255	466.00
TOL9	TOOL,SLIPPER SEAL	176.00
TOL10	TOOL,SEAL ASSY	188.00
TOL11T1	TOOL,SEAL ASSY	834.75
TOL11T2	TOOL,SEAL ASSY	1,101.87
TOL11T3	TOOL,SEAL ASSY	1,480.00
TOL11T4	TOOL,SEAL ASSY	1,402.38
TOL12	TOOL,SLIDE VALVE	1,080.00
TOL13	TOOL,BUSHING	26.04
TOL14	TOOL,STATOR PULLER	387.32
TOL15	TOOL,THRUST BRG	357.27
TOL16T1	TOOL,COLLAR ASSY 163	294.23
TOL16T2	TOOL,COLLAR ASSY	227.05
TOL16T3	TOOL,COLLAR ASSY	293.83
TOL17	TOOL,TORQUE WRENCH	1,402.38
TOL18	TOOL,TORQUE WRENCH	1,402.38
TOL19	TOOL,TORQUE WRENCH	645.00
TOL20	TOOL,SPIND GAGE PLUG	380.00
TOL22	TOOL,AIR CYL ADJ	1,035.09
TOL23T1	TOOL,MOTOR HOOK	934.92
TOL23T2	TOOL,MOTOR HOOK	934.92
TOL24	TOOL,SLIPPER SEAL	160.27
TSF26	TRANSFORMER	23.69
VAL388	VALVE,CHECK	32.70
VAL448	VALVE,WATER REGULATR	680.49
VAL449	VALVE,WATER REGULATR	961.10
VAL454	VALVE TX	119.73
VAL456	VALVE,GLOBE	9.12
VAL460	VALVE,TX	588.41
VAL486	VALVE,TX	1,337.56
VAL488	VALVE,SOLENOID	46.64
VAL494	VALVE,TX	622.27
VAL509A	VALVE ASSY, UNLOAD	441.55
VAL537	VALVE,TX	660.86
VAL538	VALVE,TX	887.11
VAL539	VALVE,TX	583.53
VAL547	VALVE,GLOBE	21.71
VAL585	VALVE, TX	887.11
VAL678	VALVE, TX	119.73
VAL691T1	VALVE, TX	307.93
VAL691T2	VALVE, TX	451.98
VAL691T3	VALVE, TX	451.98
VAL691T4	VALVE, TX	470.83
VAL691T5	VALVE,TX	470.83
VAL691T6	VALVE,TX	392.36
VAL720	VALVE,PRESS REG	257.79
VAL726	VALVE,CHECK	691.12
VAL727	VALVE,CHECK	622.80
VAL734T1	VALVE,RELIEF	81.46
VAL734T2	VALVE,RELIEF	81.46
VAL734T3	VALVE,RELIEF	81.46
VAL735T1	VALVE,RELIEF	117.98
VAL735T2	VALVE,RELIEF	111.30
VAL735T3	VALVE,RELIEF	117.98
VAL769	VALVE,PRESS REGULATR	213.86
VAL784	VALVE,PRESS REGULATR	429.94
VAL820	VALVE,TX	1,284.24
VAL833	VALVE,PRESS REGULATR	259.81
VAL902T1	VALVE,SOLENOID	130.06
VAL902T3	VALVE,SOLENOID	193.13
VAL902T10	VALVE,SOLENOID	78.65
VAL919	VALVE,TX	205.64
XFRK4T1	OIL PUMP ASSY 208V	FACTORY
XFRK4T2	OIL PUMP ASSY 230V	FACTORY
XFRK4T3	OIL PUMP ASSY 460V	FACTORY
XFRK5	OIL PUMP CONV KIT	FACTORY
XFRK7T2	FLD REP KIT SHF SEAL	849.06
XFRK7T4	FLD REP KIT SHF SEAL	983.66
XFRK7T6	FLD REP KIT SHF SEAL	973.08
XFRK7T7	FLD REP KIT SHF SEAL	1,013.36
XFRK7T8	FLD REP KIT SHF SEAL	1,131.02
XFRK7T9	FLD REP KIT SHF SEAL	1,719.32
XFRK7T10	FLD REP KIT SHF SEAL	1,631.34
XFRK7T11	FLD REP KIT SHF SEAL	1,933.44
XFRK7T12	FLD REP KIT SHF SEAL	1,335.60
XFRK7T14	FLD REP KIT SHF SEAL	1,425.70
XFRK7T15	FLD REP KIT SHF SEAL	1,219.00
XFRK7T16	FLD REP KIT SHF SEAL	1,257.16
XFRK7T17	FLD REP KIT SHF SEAL	1,232.78
XFRK7T18	FLD REP KIT SHF SEAL	1,587.88
XFRK7T19	FLD REP KIT SHF SEAL	1,219.00
XFRK7T20	FLD REP KIT SHF SEAL	975.20
XFRK7T21	FLD REP KIT SHF SEAL	828.92
XFRK7T22	FLD REP KIT SHF SEAL	1,344.08
XFRK7T23	FLD REP KIT SHF SEAL	1,110.88
XFRK7T24	FLD REP KIT SHF SEAL	1,948.28
XFRK7T25	FLD REP KIT SHF SEAL	1,871.96
XFRK7T26	FLD REP KIT SHF SEAL	2,028.84
XFRK7T27	FLD REP KIT SHF SEAL	1,570.92
XFRK7T28	FLD REP KIT SHF SEAL	1,961.00
XFRK8T30	KIT,GASKET 163DD	323.01
XFRK8T31	KIT,GASKET 163HER	324.35
XFRK8T32	KIT,GASKET 204DD	203.54
XFRK8T33	KIT,GASKET 204HER	251.90
XFRK8T34	KIT,GASKET 255DD	309.72
XFRK8T35	KIT,GASKET 255HER	408.49
XFRK10T1	SEE PG 5 FOR DESCRIP	56.56
XFRK10T2	SEE PG 5 FOR DESCRIP	51.95
XFRK10T3	SEE PG 5 FOR DESCRIP	46.01
XFRK10T4	SEE PG 5 FOR DESCRIP	66.58
XFRK10T5	SEE PG 5 FOR DESCRIP	61.90
XFRK10T6	SEE PG 5 FOR DESCRIP	56.03
XFRK10T7	SEE PG 5 FOR DESCRIP	77.44
XFRK10T8	SEE PG 5 FOR DESCRIP	64.91
XFRK10T9	SEE PG 5 FOR DESCRIP	62.11
XFRK10T10*		99.04
XFRK11	FLD REP KIT,OIL F SW	538.85
XFRK19T1	FLDREP KIT,TLC35/55D	939.86
XFRK19T2	FLDREP KIT,TLC10/35D	990.02
XFRK19T3	FLDRP KIT,TLC-15/10D	981.87
XFRK19T4	FLDREPKITTLC-35/-15D	1,044.30
XFRK20T1	FLDREPKIT,TLC 35/55D	1,027.14
XFRK20T2	FLDREPKIT,TLC 10/35D	1,096.59
XFRK10T3	FLDREPKIT,TLC-15/10D	1,088.45
XFRK20T4	FLDREPKIT,TLC-35/-15	1,131.5[illegible]
XFRK20T5	FLDREPKIT,TLC-55/-35	1,141.61
XFRK24T1	SEE PAGE5 FOR DESCR	1,093.25
XFRK24T2	SEE PAGE5 FOR DESCR	931.05
XFRK24T3	SEE PAGE5 FOR DESCR	1,016.25
XFRK24T4	SEE PAGE5 FOR DESCR	1,028.68
XFRK24T5	SEE PAGE5 FOR DESCR	1,209.39
XFRK24T6	SEE PAGE5 FOR DESCR	1,171.38
XFRK24T7	SEE PAGE5 FOR DESCR	1,021.67
XFRK24T8	SEE PAGE5 FOR DESCR	988.81
XFRK24T9	SEE PAGE5 FOR DESCR	1,090.32
XFRK24T10	SEE PAGE5 FOR DESCR	1,249.66
XFRK24T11	SEE PAGE5 FOR DESCR	1,178.80
XFRK24T12	SEE PAGE5 FOR DESCR	1,261.15
XFRK24T13	SEE PAGE5 FOR DESCR	1,142.34
XFRK25T1	FLDREPLKIT,REED SWIT	254.63
XFRK25T2	FDREPKIT,REEDSWTCAM	497.38
XFRK27T1*	SEE PAGE 5 FOR DESCR	1,332.87
XFRK27T2*	SEE PAGE 5 FOR DESCR	994.15
XFRK27T3	SEE PAGE 5 FOR DESCR	1,677.85
XFRK27T5*	SEE PAGE 5 FOR DESCR	3,057.53
XFRK27T6*	SEE PAGE 5 FOR DESCR	2,364.21
XFRK27T11	SEE PAGE 5 FOR DESCR	1,832.64
XFRK27T12	SEE PAGE 5 FOR DESCR	1,587.42
XFRK27T13	SEE PAGE 5 FOR DESCR	2,349.32
XFRK27T15	SEE PAGE 5 FOR DESCR	3,917.84
XFRK27T16	SEE PAGE 5 FOR DESCR	3,173.06
XFRK28	F R KIT,MTR HTR 255	286.83
XFRK29	F R KIT,MTR HTR 204	205.68
XFRK30	F R KIT,MTR HTR 163	204.21
XFRK31T1	SEE PAGE 5 FOR DESCR	1,066.15
XFRK31T2	SEE PAGE 5 FOR DESCR	4,171.88
XFRK31T3	SEE PAGE 5 FOR DESCR	1,038.77
XFRK31T4	SEE PAGE 5 FOR DESCR	4,163.00
XFRK31T5	SEE PAGE 5 FOR DESCR	1,031.75
XFRK31T6	SEE PAGE 5 FOR DESCR	4,323.60
XFRK31T7	SEE PAGE 5 FOR DESCR	1,128.25
XFRK31T8	SEE PAGE 5 FOR DESCR	4,420.43
XFRK31T9	SEE PAGE 5 FOR DESCR	1,189.09
XFRK31T10	SEE PAGE 5 FOR DESCR	4,472.99
XFRK31T11	SEE PAGE 5 FOR DESCR	1,294.00
XFRK31T12	SEE PAGE 5 FOR DESCR	5,573.46
XFRK31T13	SEE PAGE 5 FOR DESCR	1,201.04
XFRK31T14	SEE PAGE 5 FOR DESCR	5,492.05
XFRK31T15	SEE PAGE 5 FOR DESCR	1,328.66
XFRK31T16	SEE PAGE 5 FOR DESCR	5,619.34
XFRK31T17	SEE PAGE 5 FOR DESCR	1,677.38
XFRK31T18	SEE PAGE 5 FOR DESCR	6,015.54
XFRK31T21	SEE PAGE 5 FOR DESCR	1,046.11
XFRK31T22	SEE PAGE 5 FOR DESCR	3,743.89
XFRK31T23	SEE PAGE 5 FOR DESCR	1,016.73
XFRK31T24	SEE PAGE 5 FOR DESCR	3,734.94
XFRK31T26	SEE PAGE 5 FOR DESCR	3,788.16
XFRK31T28	SEE PAGE 5 FOR DESCR	3,885.00
XFRK31T30	SEE PAGE 5 FOR DESCR	3,937.55
XFRK31T32	SEE PAGE 5 FOR DESCR	4,814.57
XFRK31T34	SEE PAGE 5 FOR DESCR	4,733.10
XFRK31T36	SEE PAGE 5 FOR DESCR	4,860.39
XFRK31T38	SEE PAGE 5 FOR DESCR	5,256.66
XFRK32	SEE PAGE 5 FOR DESCR	222.31
XFRK33T1	SEE PAGE 5 FOR DESCR	153.27
XFRK33T2	SEE PAGE 5 FOR DESCR	341.25

PART NO.	DESCRIPTION	LIST PRICE
XFRK33T3	SEE PAGE 5 FOR DESCR	233.33
XFRK33T4	SEE PAGE 5 FOR DESCR	654.04
XFRK42	F R KIT, SLIDE VALVE	27.85
050014A1	IDR CONV 1610A/B	285.01
050014A2	IDR CONV 1615 A/B	270.19
050014A3	IDR CONV 2010	280.07
050014A4	IDR CONV 2013	293.30
050014A5	IDR CONV 2015	290.83
050014A6	IDR CONV 2510	306.19
050014A7	IDR CONV 2515	314.21
050053A1	F R KIT,SEAL 255	1,675.98
050053A2	F R KIT,SEAL 255	1,314.70
050053A3	F R KIT,SEAL 255	1,651.67
050053A4	F R KIT,SEAL 255	1,405.58
050053A5	F R KIT,SEAL 255	1,220.60
050110A2	VALVE,TX	743.53
050110A3	VALVE,TX	701.05
050110A4	VALVE,TX	802.17
050110A5	VALVE,TX	850.25
050110A6	VALVE,TX	1,128.44
050110A7	VALVE,TX	1,146.08
050147A1	LIQ INJ LINE ASSY	1,282.84
050147A2	LIQ INJ LINE ASSY	1,282.84
050155A1	GAUGE	40.74
050156A1	GAUGE	40.74
051068A1	F R KIT,MTR PROT	105.71
050181A1	RELAY	73.03
050182A1	LAMP	3.66
050182A2	LAMP	3.66
050183A1	LIGHT	12.19
050216A2	VALVE,TX	466.77
050216A4	VALVE,TX	466.77
050266A1	VALVE,TX	166.58
050309A1	CORE, FILTER	22.15
050414A1	VALVE,TX	530.05
050800A1	RELAY,TIME	96.46
0609P65	VALVE RELIEF	38.80
0617610	SIGHT GLASS, LIQUID	24.54
050664A1	SEAL,VIKING PUMP	2.28

906

Exhibit G-4

DUNHAM-BUSH PRICES

FORM NO. 4632-1F
EFFECTIVE
MARCH 1981
SUPERSEDES 4632-1E

PCX/DBX HERMETIC OIL PUMP REPLACEMENT PARTS PRICE

SELECTION

IF THIS PUMP IS ON THE UNIT	REPLACE IT WITH THIS PUMP & KIT OR KITS	ALSO SEND STRAINER ASSEMBLY
1. PMP 84 (OBSOLETE)	XFRK - 4 XFRK - 5	SELECT PROPER STRAINER FROM TABLE
2. PMP 86T1 (OBSOLETE)		
3. PMP 86T2 (OBSOLETE)		
4. PMP 88A	XFRK - 4	
5. PMP 90T1		
6. PMP 90T2		

PCX-H	120	150	180	230	290	350	400	450	500	580	630	700	750
Strainer	SRA 80A						SRA 79A	SRA 64A					
Oil Sep.	Spool						20"	24"	24"	24"	24"	24"	26"
								SEP – SUMP DIA					
PCX-O	120	150	180	230	290	350	400	450	500	580	630	700	750
Strainer	SRA 79A							SRA 64A					
Oil Sep.	16"	16"	16"	18"	18"	18"	20"	24"	24"	24"	24"	24"	26"
	SEP – SUMP DIA												
DBX	1610	1613	1615	2010	2013	2015							
Strainer	SRA 79A												
Oil Sep.	18"	18"	18"	20"	20"	20"							
	SEP – SUMP DIA												
ARPCX-120													
Strainer	SRA 79A												
Oil Sep.	20"												

PART NUMBER	DESCRIPTION	LIST PRICE See Note (1)
XFRK 4	REPLACEMENT OIL PUMP & GASKETS	$4,090.00
XFRK 5	PIPING CONVERSION KIT	246.00
SRA 64A	STRAINER ASSEMBLY	316.00
SRA 79A	STRAINER ASSEMBLY	274.00
SRA 80A	STRAINER ASSEMBLY	268.00

1. Ordering Instructions: Oil pump order will not be accepted unless it includes the following information:
   a) Oil pump motor voltage, phase, hertz
   b) Complete oil pump nameplate data, including Pump Part No. and Type No.
   c) Complete unit model no.
   d) Complete unit serial no.
   e) Engineering file no. ("X" No.)

2. If out of warranty the following credit will be issued depending on the condition of the returned pump as determined by the West Hartford Quality Control Department.
   a) Current Pump Models

	Credit List Deduct
1) Pump failure (other parts useable)	$1,514.00
2) Motor burnout (other parts useable)	1,293.00
3) Pump and motor failure (Housing and shaft useable)	946.00
b) Obsolete pump model	(No Credit)

   c) Follow RGB Procedure for returning the pump

3. Certain PCX/DBX units may have a special oil pump depending on the application, e.g. an open type pump may be supplied for explosion proof installations, etc. Supply all pump data to West Hartford, Order Service Department. Contact West Hartford Order Service for pricing and delivery.

PRICES AND SPECIFICATIONS SUBJECT TO CHANGE WITHOUT NOTICE.
FOR TERMS OF SALE REFER TO LATEST REVISION OF FORM 1278
PRICES F.O.B. WEST HARTFORD, CONNECTICUT

DUNHAM-BUSH, INC. • West Hartford, Connecticut 06110, U.S.A.

Exhibit G-5

FORM NO. 17448P
EFFECTIVE
MARCH 1981
SUPERSEDES 17448N

DUNHAM-BUSH

A5, A7, PM7 and A9 CENTRIFUGAL PUMP REPAIR PARTS LIST PRICES

PRICES AND SPECIFICATIONS SUBJECT TO CHANGE WITHOUT NOTICE.
FOR TERMS OF SALE REFER TO LATEST REVISION OF FORM 1278

REFER TO FORM 2505 FOR DESCRIPTION OF PARTS AND NUMBERS

PART NUMBER	LIST PRICE
472	$ 25.05
860	63.10
861	73.40
1112	.70
3179	80.20
3199	103.00
3291	148.00
3292	2.30
3293	2.35
3312	2.30
3313	1.75
A2-51	73.40
A2-672	43.45
A2-3015	45.90
A2-3016	45.90
A2-3018	24.10
A2-3020	1.20
A2-3021-1	5.60
A2-3021-2	16.85
A2-3022-1	1.20
A2-3022-2	5.85
A2-3023	1.20
A2-3025	57.20
A2-3026	45.90
A2-3027	45.90
A2-3028	45.90
A2-3029	5.90
A2-3379	5.45
A2-3691	12.10
A2-3898	32.90
A2-3905	73.90
C2-73 x 6-1/16	276.00
C2-73 x 6-9/16	276.00
C2-73 x 6-3/4	276.00
C2-73 x 7-5/16	276.00
C2-73 x 8-7/16	276.00
C2-73 x 9	276.00
C2-2335	218.00
C2-2336	172.00
C2-2337	183.00
C2-2339	310.00
C2-2340	264.00
C2-2342	91.65
C2-2343	4.45

PART NUMBER	LIST PRICE
C2-2344	$264.00
C2-2345	310.00
C2-2346	344.00
C2-2347	344.00
C2-2376	495.00
C2-2377	286.00
C2-2378	240.00
C2-2379	255.00
C2-2380	276.00
C2-2381	293.00
C2-2382	293.00
C2-2383	428.00
C2-2384	179.00
C2-2385	436.00
C2-2386	160.00
C2-2387	436.00
C2-2388	160.00
C2-2389	323.00
C2-2390	268.00
C2-2392	339.00
C2-2498	311.00
C2-2659	499.00
C2-2660	504.00
C2-2661	538.00
C2-2662	550.00
C2-2663	550.00
C2-2664	563.00
C2-2665	142.00
C2-2666	756.00
C2-2667	779.00
C-7763	1.50
C8709	1.20
C8854	2.55
C8930	9.20
C8938	7.35
C8958	12.90
C10025	12.20
C10035	3.00
C10037	15.15
C10038	15.15
C10060	15.15
C10061	15.15

PART NUMBER	LIST PRICE
C10062	$ 10.80
C10063	10.80
C10063SS	40.70
D2-74	765.00
D2-76	797.00
D2-77	550.00
D2-78	611.00
D2-79	918.00
D2-80	918.00
D2-1255	424.00
D2-1256	300.00
D2-1265	469.00
D2-1266	368.00
D2-1267	469.00
D2-1268	310.00
D2-1269	469.00
D2-1270	355.00
D2-1271	687.00
D2-1272	344.00
D2-1273	687.00
D2-1274	332.00
D2-1275	883.00
D2-1276	412.00
D221299	310.00
D2-1300	469.00
D2-1301	300.00
D2-1302	469.00
D2-1303	368.00
D2-1304	469.00
D2-1305	412.00
D2-1306	687.00
D2-1307	412.00
D2-1308	1,833.00
D2-1346	861.00
D2-1347	1,148.00
D2-1348	1,148.00
D2-1349	1,148.00
D2-1350	1,261.00
D2-1351	1,261.00
D2-1352	1,147.00
D2-1353	1,147.00

108

PART NUMBER	LIST PRICE
D2-1354	$1,147.00
D2-1355	1,147.00
D2-1356	1,147.00
D2-1357	1,147.00
D5193 x 4-5/16	91.65
D5193 x 4-9/16	91.65
D5193 x 5	91.65
D5195 x 4-1/2	91.65
D5197 x 3-5/16	91.65
D5197 x 4-5/16	91.65
D5199 x 4-1/8	91.65
D5199 x 4-1/4	91.65
D5202 x 4-1/8	91.65
D5203 x 3 1/8	91.65
D5203 x 3-1/2	91.65
D5203 x 3-7/8	91.65
D5203 x 4-3/16	91.65
D5352	2.85
D5450	6.60
D5478	15.15
E6041	79.35
E6042	61.10
E6046 x 1-1/2	79.35
E6047 x 2	79.35

PART NUMBER	LIST PRICE
E6048	$ 79.35
E6077	134.00
E6078	159.00
E6079	153.00
E6080	185.00
E6081	122.00
E6141 x 5-1/4	257.00
E6141 x 5-7/8	257.00
E6181 x 4-7/16	257.00
E6181 x 4-15/16	257.00
E6181 x 5-15/16	257.00
E6181 x 5-15/32	257.00
E6181 x 6-3/8	257.00
E6181 x 7-3/16	276.00
E6181 x 8-1/4	276.00
E6184 x 3-15/16	257.00
E6184 x 4-1/4	257.00
E6188 x 4-15/16	257.00
E6188 x 5-3/8	257.00
E6188 x 5-9/16	257.00
E6188 x 5-29/32	257.00
E6188 x 6-1/2	257.00
E6188 x 6-5/16	257.00
E6188 x 7-1/16	276.00

PART NUMBER	LIST PRICE
E6188 x 8-7/16	$ 276.00
E6204 x 4-3/4	257.00
E6204 x 5-5/16	257.00
E6204 x 5-21/32	257.00
E6204 x 6-1/8	257.00
E6204 x 6-3/4	257.00
E6204 x 7-15/16	276.00
E6204 x 9	276.00
F539	91.65
F540	137.00
F541	122.00
F544	146.00
F545	153.00
F546	107.00
P2	1.15
P6	1.15
P116	2.30
P142	4.10
P150	1.20
P189	4.10
P190	4.55
P192	1.20
P193	1.75
P194	.75
P195	1.25
P196	1.10
1/8" OD Copper Tube	.60

C2-3211 x 6 1/16"	$ 276.00
C2-3211 x 6 9/16"	276.00
C2-3211 x 6 3/4	276.00
C2-3211 x 7 15/16"	276.00
C2-3211 x 8 7/16"	276.00
C2-3211 x 9"	276.00
C2-3212 x 5 1/4 "	257.00
C2-3212 x 5 7/8"	257.00
C2-3212 x 6 1/16"	257.00
C2-3213 x 4 7/16"	257.00
C2-3213 x 4 15/16	257.00
C2-3213 x 5 15/32"	257.00
C2-3213 x 5 9/16"	257.00
C2-3213 x 5 15/16"	257.00
C2-3213 x 6 3/8"	257.00

C2-3213 x 7 3/16"	$276.00
C2-3213 x 8 1/4 "	276.00
C2-3214 x 4 15/16"	257.00
C2-3214 x 5 3/8 "	257.00
C2-3214 x 5 29/32"	257.00
C2-3214 x 6 5/16"	257.00
C2-3214 x 6 1/2 "	257.00
C2-3214 x 7 1/16"	276.00
C2-3214 x 8 7/16 "	276.00
C2-3215 x 4 3/4 "	257.00

C2-3215 x 5 5/16"	$ 257.00
C2-3215 x 5 21/32"	257.00
C2-3215 x 6 1/8"	257.00
C2-3215 x 7 15/16"	276.00
C2-3215 x 9"	276.00
D2-1478	171.00
D2-1479	458.00
D2-1480	526.00
D2-1481	236.00
D2-1482	596.00
D2-1483	1,078.00

Exhibit 3-6

FORM 6139B

SUPERSEDES 6139A AND 6139-2

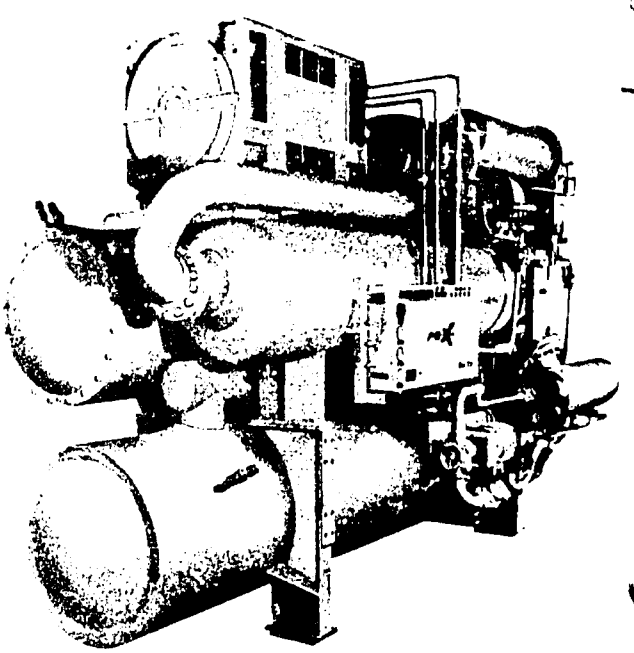

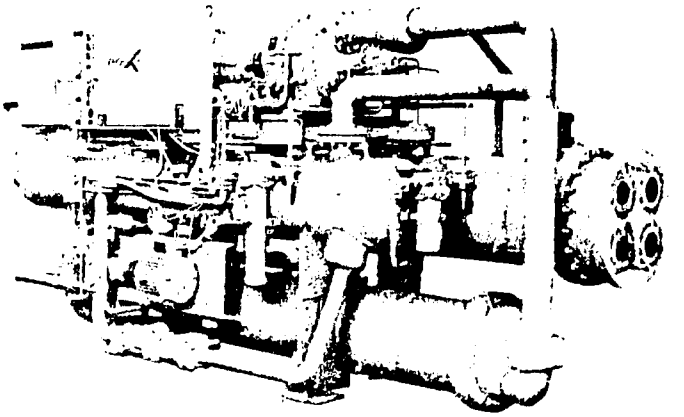

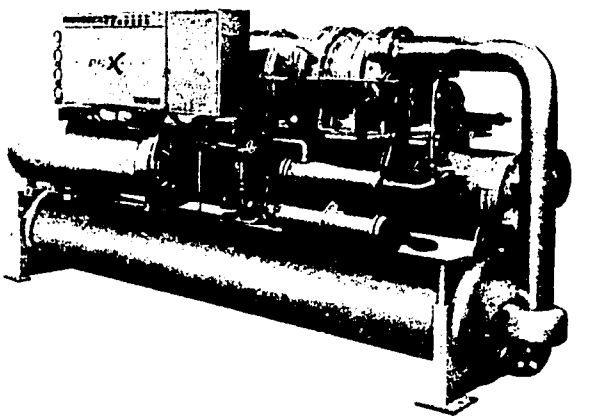

DUNHAM-BUSH

PCX-H, PCX-O, PCX-OHR & IPCX PACKAGED CHILLERS

DIRECT EXPANSION AND FLOODED TYPE UNITS

INSTALLATION, OPERATION AND MAINTENANCE INSTRUCTIONS

910

TYPICAL UNIT COMPONENTS

PCX-O PACKAGED CHILLER (DIRECT EXPANSION)

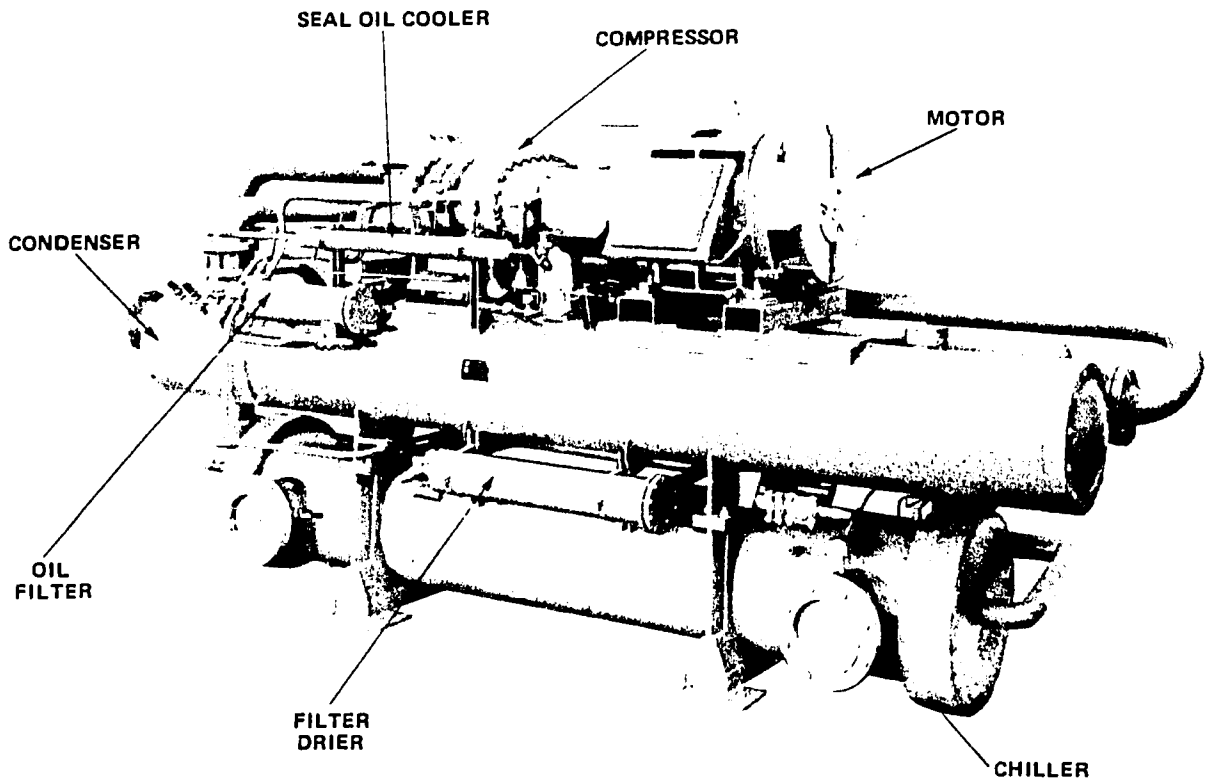

PCX-OHR HEAT RECLAIM PACKAGED CHILLER (DIRECT EXPANSION)

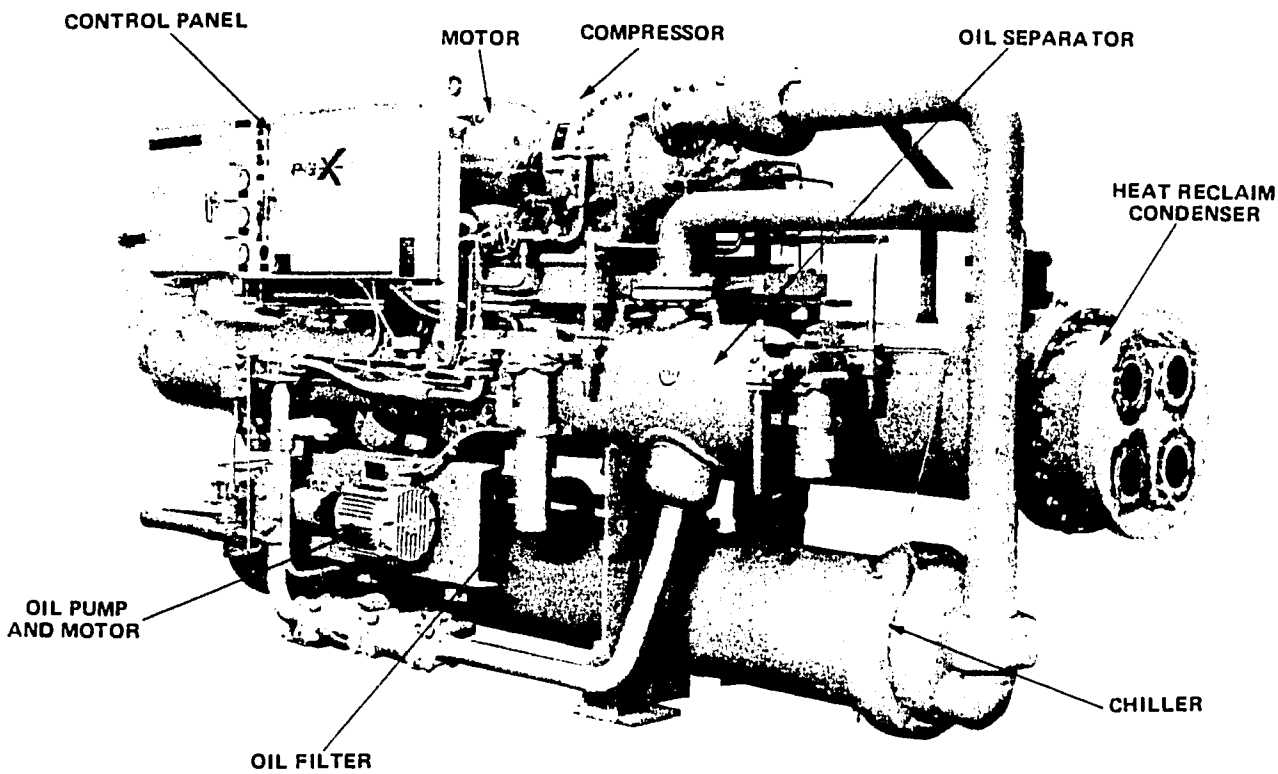

TYPICAL UNIT COMPONENTS

IPCX-O INDUSTRIAL PACKAGED CHILLER (DIRECT EXPANSION)

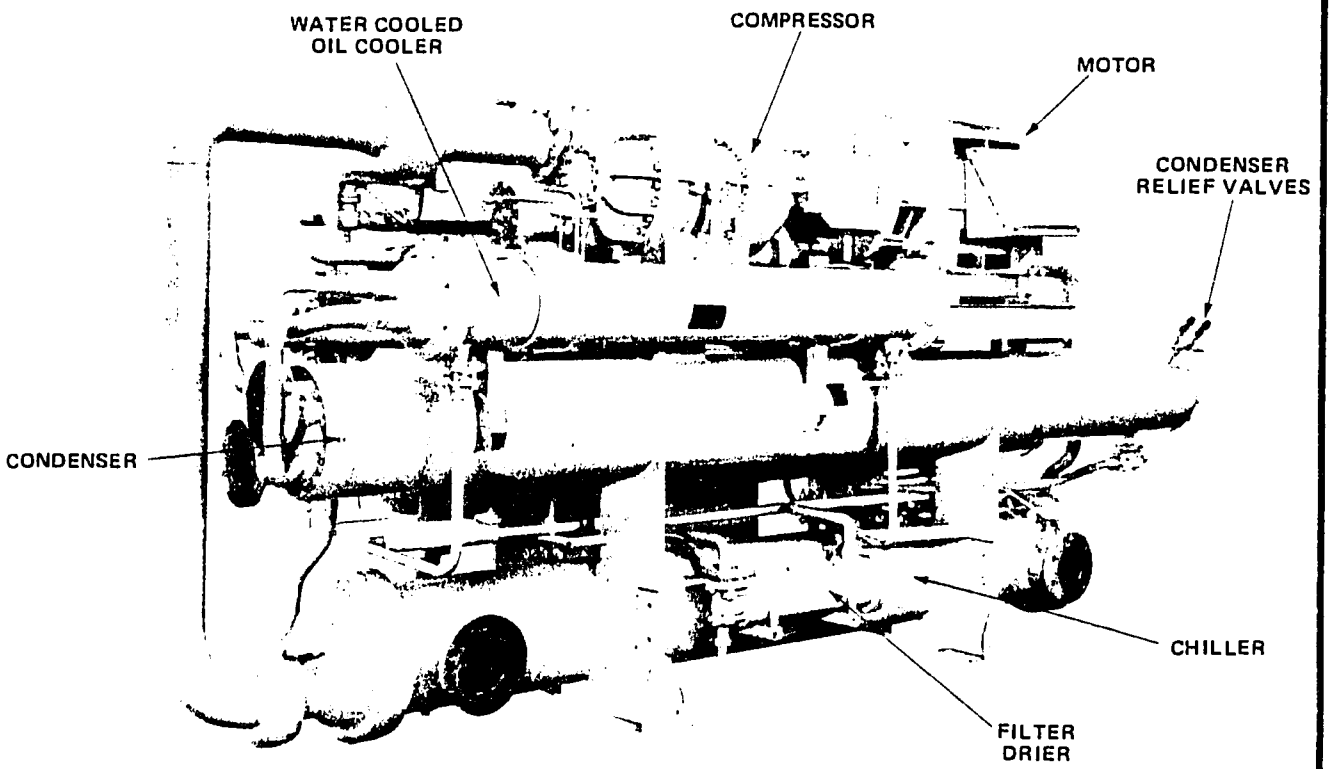

PCX-H HERMETIC PACKAGED CHILLER (DIRECT EXPANSION)

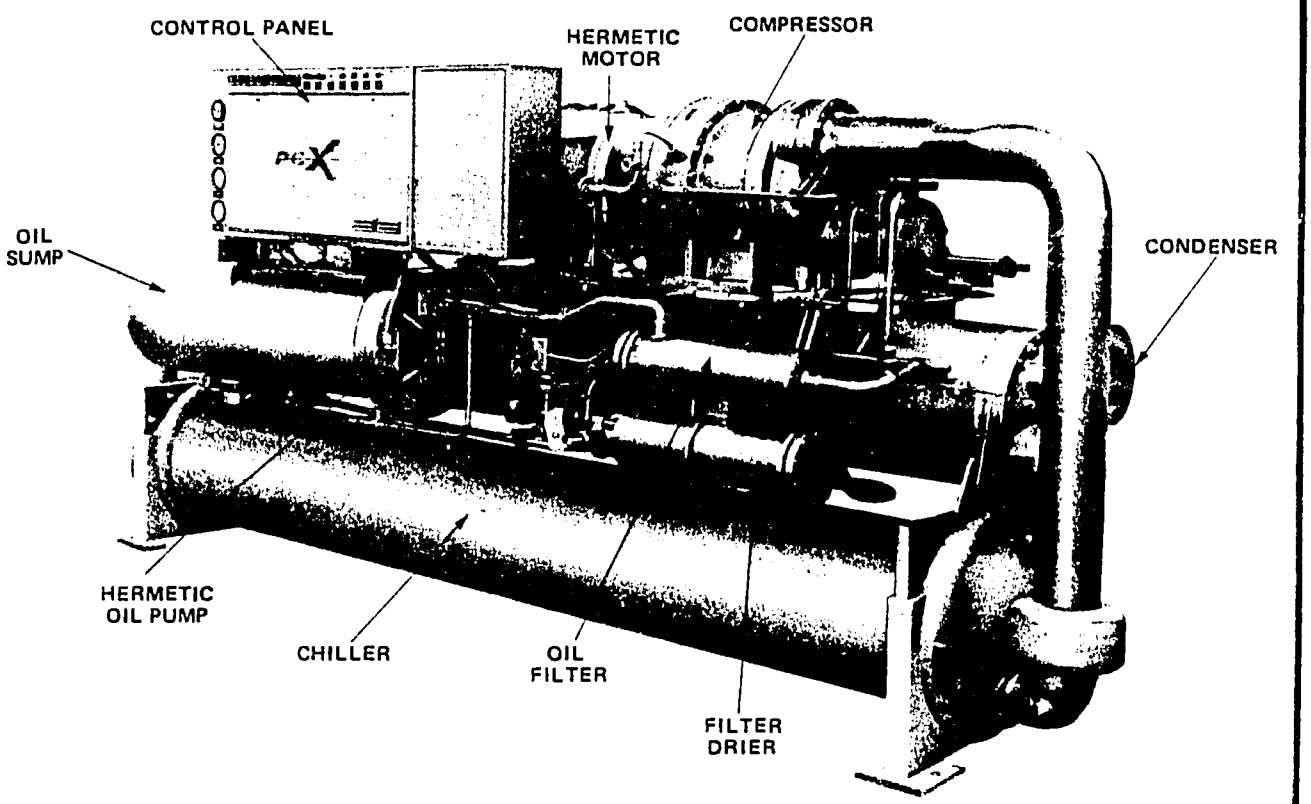

912

INDEX

TABLE OF CONTENTS

I. GENERAL INFORMATION — PAGE

A. Shipping 1
B. Receiving Inspection 1
C. Rigging and Moving 1

II. INSTALLATION

A. Location 2
B. Mounting 2
C. Leveling 2
D. Unmounted Accessories 2
E. External Connections 2-4
F. Request for Start-Up Representative . . . 4

III. OPERATION

A. General 5
B. Systems 6
C. Component Operation 7-12
D. Optional Subsystem Operation 12-13
E. Typical Piping Schematics 13-16
F. Function of Electrical Controls 17-20
G. Typical Electrical Schematics 21-26

IV. MAINTENANCE — PAGE

A. General 27
B. Periodic Maintenance 27-29
C. Maintenance Records 29-30
D. Oil Removal/Addition 31
E. Transferring/Evacuating/ Charging Refrig. 32-34
F. Component Maintenance 35-46
G. Optional Subsystem Maintenance 47
H. System Tests 48-51

V. TROUBLE SHOOTING

A. Trouble Shooting Chart 52-53

VI. APPENDIX

A. Daily Operating Log 54
B. Monthly Operating Log 55
C. Condenser Water Piping 56
D. Comp.Lubricating Requirements 57
E. Typical Information Labels 58-59

SERVICE PROCEDURES

NO.	PROCEDURE	PAGE
SP-1	*Oil Removal*	31
SP-2	*Oil Replenishment(Vacuum Method)*	31
SP-3	*Oil Replenishment(Pump Method)*	31
SP-4	*Relief Valve Access*	32
SP-5	*Service Valve Access*	32
SP-6	*Charging Valve Access*	32
SP-7	*Partial Pumpdown*	33
SP-8	*Liquid Refrig. Transfer*	33
SP-9	*Gas Refrig. Transfer from Chiller*	33
SP-10	*Liq. Refrig. Transfer from Condenser*	33
SP-11	*Gas Refrig. Transfer From Condenser*	33
SP-12	*Evacuation/Dehydration*	33
SP-13	*Initial Gas Refrig. Charging*	34
SP-14	*Liquid Refrig. Charging*	34
SP-15	*Adding to Refrig. Charge*	34
SP-16	*Compressor Coupling Alignment*	35
SP-17	*Oil Filter Replacement*	36
SP-18	*Coupling Alignment, Open Oil Pump*	37
SP-19	*Clearance Adjust., Open Oil Pump*	37
SP-20	*Maintenance, Hermetic Oil Pump*	37
SP-21	*Oil Pressure Relief Valve Adjust.*	38
SP-22	*Oil Pressure Relief Valve Assy.*	38
SP-23	*Replacement, Oil Sump Heaters*	38
SP-24	*Oil Cooler, Valve Adjustment*	40
SP-25	*Oil Cooler, Valve Flushing*	40
SP-26	*Seal Oil Cooler, Temp. Adjust.*	40
SP-27	*Condenser Cleaning, Mechanical*	41
SP-28	*Condenser Tube Plugging*	41
SP-29	*Filter Drier Replacement*	42
SP-30	*Supcrheat Adjustment*	43
SP-31	*Thermo-Expansion Valve Disassy.*	43
SP-32	*Disassy/Maintenance P.O.S. Valve*	44
SP-33	*Suction Filter Maintenance - In Line*	46
SP-34	*Suction Filter Maintenance - Head*	46
SP-35	*Hot Gas Bypass Adjustment*	47
SP-36	*Motor Insulation Resistance Test*	48
SP-37	*Refrigerant Leak Test*	49

DUNHAM-BUSH RESERVES THE RIGHT TO MAKE CHANGES IN SPECIFICATIONS AND DESIGN WITHOUT NOTICE.

REFERENCES *

TITLE	FORM NO.
PCX-H Hermetic Type Packaged Chillers 120 Thru 400 Tons	6039
PCX-O Open Type Packaged Chillers 120 Thru 350 Tons	6041
PCX-O Open Type Packaged Chillers 400 Thru 750 Tons	6041-2
PCX-OHR Open Type Heat Reclaim Packaged Chillers 85 Thru 330 Tons	6058
DBX Compressor Service Manual	6136
PCX Hermetic Packaged Chiller Templates	6239-1 Thru 6
PCX-O Open Type Packaged Chiller Templates	6241-1 Thru 8
Motor Starter Specifications	6236
Receiving Inspection Report	9214
Request for Authorized Start-Up Representative	9180
Daily Operating Log	9198
Monthly Operating Log	9198-1

*THESE FORMS ARE AVAILABLE AT THE LOCAL DUNHAM-BUSH SALES REPRESENTATIVE'S OFFICE.

INTRODUCTION

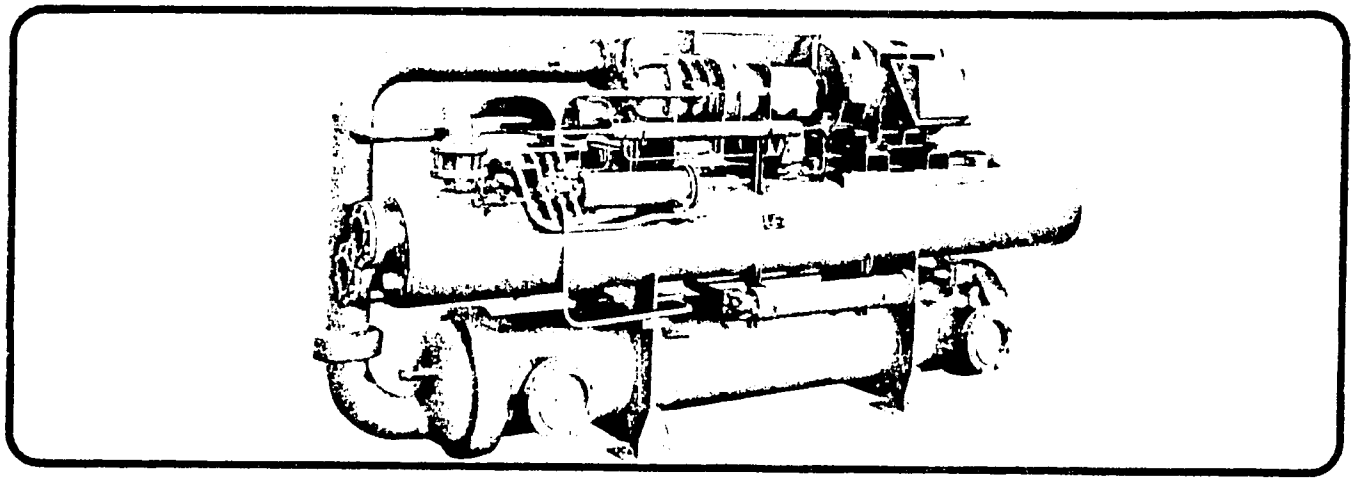

Each unit was designed to meet specific criteria and must be operated within conditions specified when ordered.

Fluorocarbon refrigerant must be handled with caution and release to the atmosphere should be minimized. Instructions for charging and retrieving refrigerant from these units can be found in the maintenance section of this manual.

These instructions and the drawings supplied with the PCX Unit must be followed carefully to insure proper installation, operation, and maintenance.

This manual is written and illustrated for a single PCX Unit installation. For instructions concerning a multiple unit installation, consult Dunham-Bush, Inc.

WARNING

Valves or connections which can cause loss of the factory installed refrigerant charge and lubricating oil charges shall not be opened under any conditions. The system shall not be dismantled or opened during installation except under the supervision of a Dunham-Bush, Inc., Authorized Service Representative.

The PCX Unit shall NOT be started following installation except under the direct supervision of a Dunham-Bush, Inc., Authorized Service Representative.

Warning tags attached to the unit should not be removed either prior to or after installation.

Compliance with the above is mandatory in order that the warranty shall not be jeopardized. All contacts with Dunham-Bush, Inc., regarding requests for information, service, or parts should be made to the nearest sales office.

DUNHAM-BUSH RESERVES THE RIGHT TO MAKE CHANGES IN SPECIFICATIONS AND DESIGN WITHOUT NOTICE.

I. GENERAL INFORMATION

A. SHIPPING

The unit is shipped with skids and lifting arms attached for ease in rigging. Refrigerant and oil systems are fully charged. Chiller and condenser water connections have covers to prevent contamination of the vessels. Check the unit nameplate to be sure the power supply meets the unit requirements. The wiring diagram number and type of refrigerant can also be found on the unit nameplate.

B. RECEIVING/INSPECTION

The unit should be inspected immediately, in the presence of the carrier's representative, for any evidence of damage during shipping. Any damage should be noted on the carrier's delivery receipt before it is signed. A damage claim should then be filed by the purchaser against the delivering carrier as all shipments are made at the purchaser's risk. The receiving inspection report (Form 9214), sent with the installation instructions, should also be filled out at this time and forwarded to the Dunham-Bush, Inc., National Service Department, West Hartford, CT. 06110.

C. RIGGING AND MOVING

Riggers and installers must use every precaution to prevent damage while moving the unit from the point of shipment to its permanent location. Pushing, pulling or climbing on any of the unit components or piping can easily create damage that will result in costly repairs of leaks and malfunctioning components. The only places it is safe to apply hoisting, jacking, pushing, or pulling forces are to shipping skids and lifting arms. Cables are to be attached only to the lifting arms, spreaders must be used with the lifting cables to prevent damage to the unit.

Skidding may be done directly on the shipping skids or on properly spaced rollers under the skids. Pushing and pulling should only be directed against the skids and lifting arms.

II. INSTALLATION

A. LOCATION

The location of the unit may be any foundation or deck that is generally level within 1/8 of an inch and structurally capable of supporting the weight of the unit. A cleared area should be left around the unit to aid in operation, maintenance and removal of components. See references (packaged chiller templates) to obtain minimum clearance requirements.

B. MOUNTING

Resilient pads are provided for installation under the mounting legs. For critical installations, Dunham-Bush, Inc., can provide whatever type of vibration isolator the customer specifies. They must be installed and adjusted in accordance with the isolator manufacturer's instructions. The unit may be cemented or lagged to the foundation if desired.

C. LEVELING

When the unit is at its final location, it should be jacked or hoisted, by the lifting arms, the shipping skids removed and the unit let down on the isolator equipment supplied (felt pads or vibration isolators). It should then be checked for level longitudinally at the top center of the condenser shell and laterally across the compressor motor feet. Steel shims should be installed under the isolator pads, if necessary to level the unit.

D. UNMOUNTED ACCESSORIES

A chiller flow switch, which is shipped in a separate container accompanying the unit, must be installed in the external chilled water outlet piping. It must be located in a horizontal section on the pipe where there is at least five (5) pipe diameters on both sides of the flow switch before any other connections, as indicated in Fig. 1. The flow switch paddle must be adjusted to the size of pipe in which the paddle is installed, and the switch set to trip at approximately 50% of the design flow. Consult the wiring diagram accompanying the unit for the electrical connections to interlock the flow switch with the control panel.

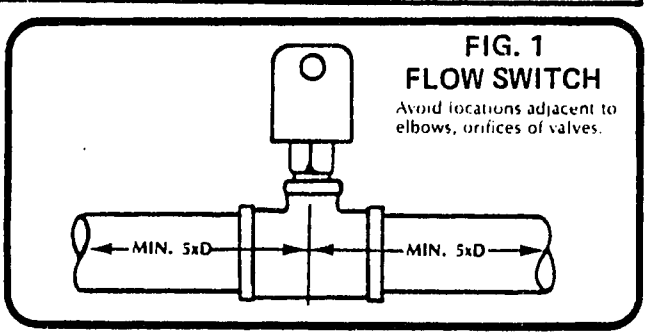

FIG. 1
FLOW SWITCH
Avoid locations adjacent to elbows, orifices of valves.

E. EXTERNAL CONNECTIONS

1. Water Connection

After the unit has been leveled, the external water piping to the chiller and condenser may be made up. Air vent valves should be installed at all high points to bleed the system of entrapped air. Drain valves or plugs should be installed at low points to gravity drain the system. The unit drain plugs for the chiller, condenser and oil cooler (if equipped) must be installed prior to filling the system. Insulation should be installed on all external piping to prevent sweating and if the chiller (vessel) and associated piping was not equipped with the optional factory insulation, it too must be insulated.

All external plumbing should have manual shut-off valves installed near the unit for ease in servicing and maintenance. Strainers should also be mounted in the piping before the unit to prevent dirt and other contaminants from entering and damaging the unit and its satellite equipment.

The external plumbing must be carefully located and adequately supported by pipe hangers to prevent twisting or bending stresses on the unit when the flanges or grooved pipe connections are bolted. It is recommended that flanged elbows be used at the connection to the condenser so that the external piping will not interfere with servicing of the condenser tubes. Flexible connections on water lines throughout the machinery room are recommended for chiller and condenser piping, where sound or vibration transmission may be a problem.

Following make up of the external plumbing, a check should be made for piping stresses at the PCX unit, as follows: Remove condenser and chiller connecting bolts. If any bolts are misaligned, adjust external piping or hangers to properly align the connections. If it is necessary to reshape and anneal the external piping, the inside of the piping must be cleaned of the resulting scale before reassembly. The piping should then be thoroughly flushed to remove all foreign material, connected to the unit, filled, vented and tested for leaks.

PCX units are designed for a fixed evaporator water flow, and means should be employed to assure a relatively constant flow at all loads.

915

E. EXTERNAL CONNECTIONS CONTINUED

2. Water Treatment

Most industrial water supplies contain dissolved or suspended materials which cause scale formation, corrosion, and propagate slime, algae, etc. It is strongly recommended that a water treatment specialist be consulted for additive systems to counteract or prevent the damages caused by these impurities.

Cooling towers and evaporative water coolers experience a constant loss of water due to evaporation. Since evaporation is a distillation process, an increasing concentration of suspended and dissolved impurities occurs. This increase of impurities can be greatly reduced by a bleed-off system which will constantly bleed off the contaminated water and replace it with fresh water through the sump float valve.

Chemical water treatment in addition to the bleed-off system will probably be necessary. The correct rate of water bleed-off and the proper chemical treatment should be determined by a specialist familiar with the local water characteristics. A daily check and periodic inspections should be made to be sure the correct bleed-off rate and chemical treatment is maintained. Do not underestimate the importance of daily logged readings of condensing pressure, water temperatures, oil cooler water (when supplied) and oil temperatures in determining the condition of the heat transfer surfaces, and the effectiveness of the water treatment.

NOTE: Consult manufacturer for information concerning design, installation and operation of the cooling tower or evaporative water cooler.

WARNING: Dunham-Bush, Inc., will not be liable for any damage or failure resulting from the physical or chemical properties of the condenser water used in this equipment.

NOTE: Local codes may require the relief valve piping piped away from the unit.

3. Electrical Connections

The unit is completely wired at the factory prior to delivery. The connections which must be made by the installer are listed below. Each circuit must have adequate control and protection devices incorporated in it in accordance with the National Electric Code and/or other applicable codes in the area in which the unit is installed. The voltage, frequency and phase must be in accordance with that shown on the unit nameplate, and within 1% voltage imbalance. Flexible conduit should be used where vibration may be a problem. All wiring must be in accordance with the wiring diagram furnished with the unit, the National Electrical Code and any local codes that may apply. Any deviations from the above requirements must have the prior approval of Dunham-Bush, Inc. Customer supplied starters for the compressor motor must be in compliance with the latest revision of Dunham-Bush, Inc., Engineering Specification No. ELC-ES-9 which is available from the local Dunham-Bush, Inc., sales representative's office under Form No. 6236 or as individually approved in writing by Dunham-Bush, Inc. A starter interconnection wiring diagram can be found in the Operation Section of this manual.

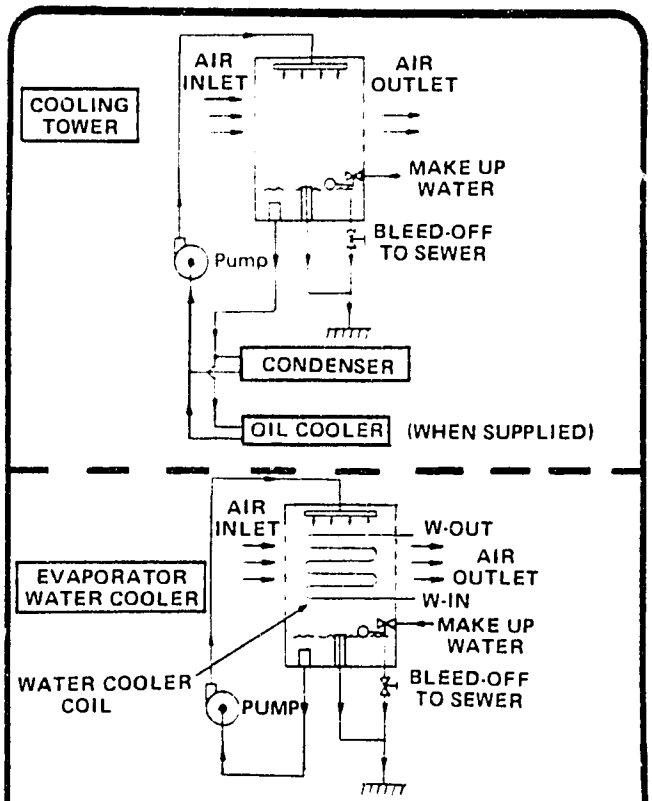

FIG. 2 TYPICAL BLEED-OFF SYSTEMS

The following external wiring is to be provided by the installer:

a. Power supply to compressor motor starter with circuit protection, and from starter to compressor motor.

b. Power supply to oil pump motor contactor or starter with circuit protection.

c. Chilled water pump auxiliary contacts to control panel.

d. Condenser water pump starter control circuit to control panel.

e. Compressor motor starter control circuit to control panel.

f. Compressor motor overload circuit to control panel.

g. Load limiter wiring from starter to control panel.

h. A properly sized control transformer or 120V/60 HZ./1PH power supply to control panel, with circuit protection.

i. Flow Switch to control panel.

4a. Mounting and Leveling

☐ Erected on foundation . . . in accordance with construction and electrical drawings supplied to the customer and requirements of this manual.

☐ Spring isolators or pads, installed, and the unit leveled . . . in accordance with isolator manufacturer's instructions and the requirements of this manual.

916

II. INSTALLATION

E. EXTERNAL CONNECTIONS CONTINUED

4b. Water Piping

- ☐ Condenser cooling water piping installed between condenser, pumps and cooling tower or well . . . as specified in this manual.
- ☐ Chilled water piping installed between chiller, pumps, and terminal equipment . . . as specified in this manual.
- ☐ Make-up and fill lines installed to cooling tower and chilled water system . . . and chemical treatment and bleed-off systems as needed.
- ☐ Thermometers, air vents, drain plugs and pressure gauges installed in chilled and condenser water inlet and outlet lines.
- ☐ Flow switch installed in outlet chilled water line and adjusted to a minimum of 50% flow.
- ☐ All water piping checked for strain . . . as specified in this manual.
- ☐ Water piping leak tested, flushed and vented, water strainers checked after flushing to be certain they are not clogged.
- ☐ Chiller and condenser water flow available from supply in sufficient quantity to meet unit design requirements. . . . and with adequate water treatment.

4c. Electrical Wiring

- ☐ Power supply available . . . with circuit protection and in accordance with the requirements on the unit nameplate and this manual.
- ☐ Wiring completed from power supply through circuit protection in accordance with the drawing supplied and the requirements of this manual.
- ☐ Wiring completed from power supply to circuit protection for oil pump motor in accordance with the wiring diagram and the requirements of this manual.
- ☐ Wiring completed from power supply through circuit protection to 115V control circuit in unit control panel (or through 115V transformer to control circuit) . . . in accordance with the drawing supplied and requirements of this manual.
- ☐ Wiring from power supply through circuit protection to satellite equipment and interlocks wired to control panel in accordance with drawing supplied and requirements of this manual.
- ☐ Phasing correct for direction of rotation of all motors except compressor and oil pump motors . . . phasing of compressor and oil pump motor will be checked by Dunham-Bush, Inc. start-up representative.

4d. Conditions Required for Start-Up

- ☐ Load must be available for operation and testing . . . a refrigeration load adequate to cause normal operation of the unit MUST BE AVAILABLE.
- ☐ Competent representatives of the Allied Trades (electrical contractor, steam fitters, controls contractor, etc.) involved in the installation of this chiller must be at job site to correlate their portion of the work in starting, testing, and balancing this chiller.

F. REQUEST FOR START-UP REPRESENTATIVE

After the installation has been completed and checked, Form 9180 must be filled out and sent to the National Service Department of Dunham-Bush, Inc. This Form is a request for the services of a Dunham-Bush, Inc. authorized start-up representative to perform the initial start-up of the Dunham-Bush chiller. The purchaser will have competent service, and operating personnel in attendance to assist in the work involved, and also to be trained in the service and maintenance of this chiller. (During the warranty period the manufacturer is responsible for parts only upon proof of defective workmanship or manufacture).

Following receipt of this signed form, a representative will be sent to the customer. He will inspect the installation to determine whether it meets Dunham-Bush, Inc. requirements, perform the initial start-up of the installation to determine whether it is in satisfactory operating condition, and instruct the specified customer personnel in its operation and maintenance for the length of time specified in the purchase contract.

NOTE:

Sump oil heaters should be energized a minimum of 24 hours prior to arrival of start-up representative. On hermetic compressors, the motor housing heaters should also be energized a minimum of 24 hours and the oil sump temperature must be at a minimum of 100°F (38°C) prior to arrival of start-up representative. This will insure that the oil is warm enough to vaporize any refrigerant in the oil and is in the normal operating temperature range.

III. OPERATION

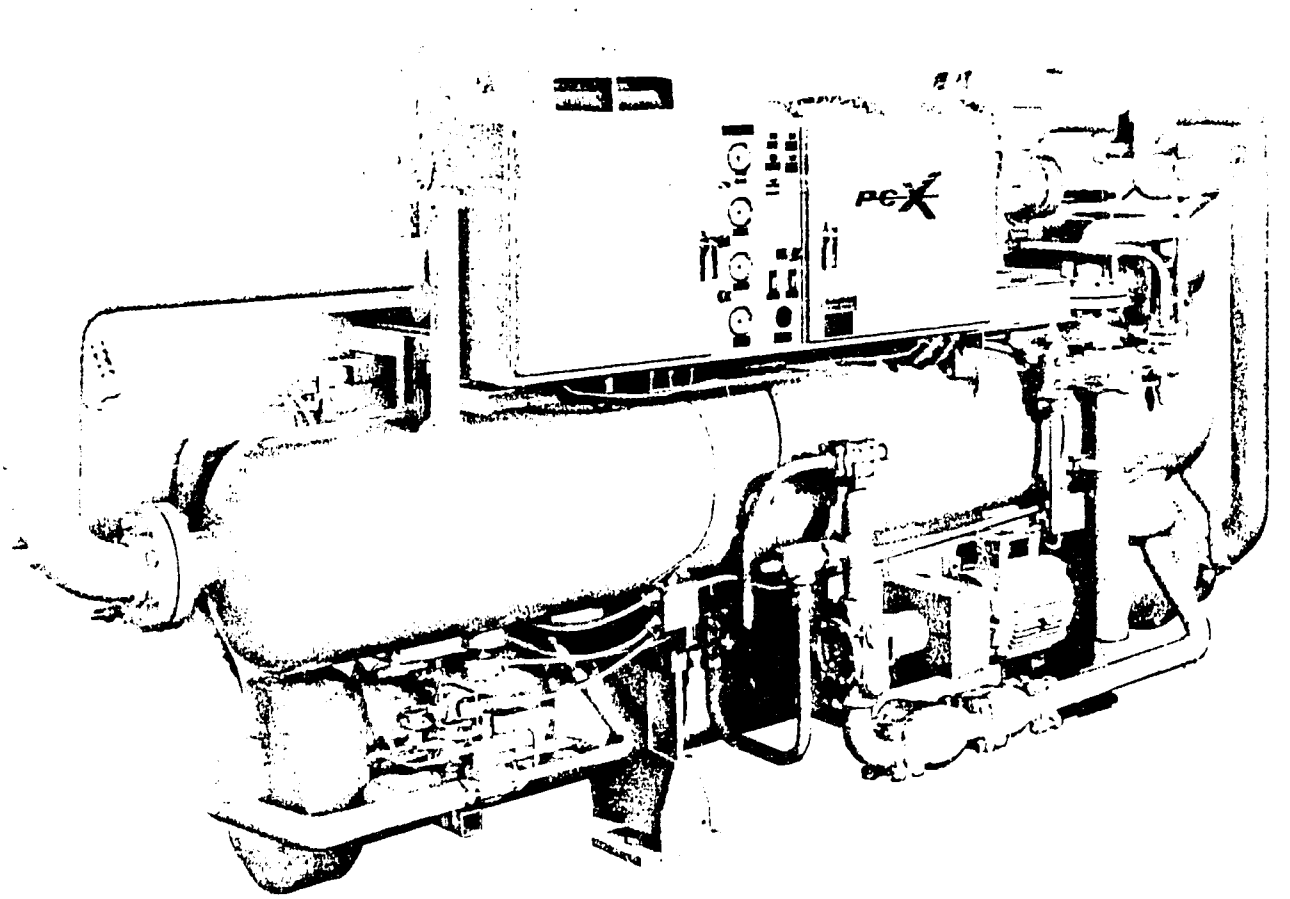

IPCX-O DIRECT DRIVE PACKAGED CHILLER

A. GENERAL

WARNING: The compressor and oil pump are NOT to be started initially except under the direct supervision of an Authorized Dunham-Bush, Inc. Start-Up Representative. Be sure that oil sump heaters and motor housing heaters (if the unit is hermetic) are turned on for a minimum of twenty-four hours prior to initial start-up. Couplings and motors have been aligned with the compressor at the factory. During shipment they may become misaligned. Alignment and motor pinning at initial start-up must be done by a Dunham-Bush, Inc. Start-Up Representative.

While this unit is greatly simplified and incorporates features to protect it against damage, it does represent a considerable investment and deserves the attention and care normally given to any fine piece of equipment. Reliable and economical operation will be achieved if the instructions in this manual are followed.

CAUTION: Operate this equipment in accordance with the instructions of this manual. DO NOT alter control settings to other than those specified on the wiring diagram accompanying the unit.

This equipment has been tested prior to shipment and found satisfactory for the conditions under which it was sold. Operation in excess of these conditions will subject this equipment to stresses for which it was not designed. Failure to heed this warning may result in injury to operating personnel and may jeopardize the warranty under which the equipment was sold.

III. OPERATION

B. SYSTEMS

1. REFRIGERANT SYSTEM

The PCX packaged chiller may have either a direct expansion or flooded chiller depending on the capacity of the unit. A simple flow diagram as depicted in Fig. 3 and 4 indicates the principle parts of a basic refrigeration

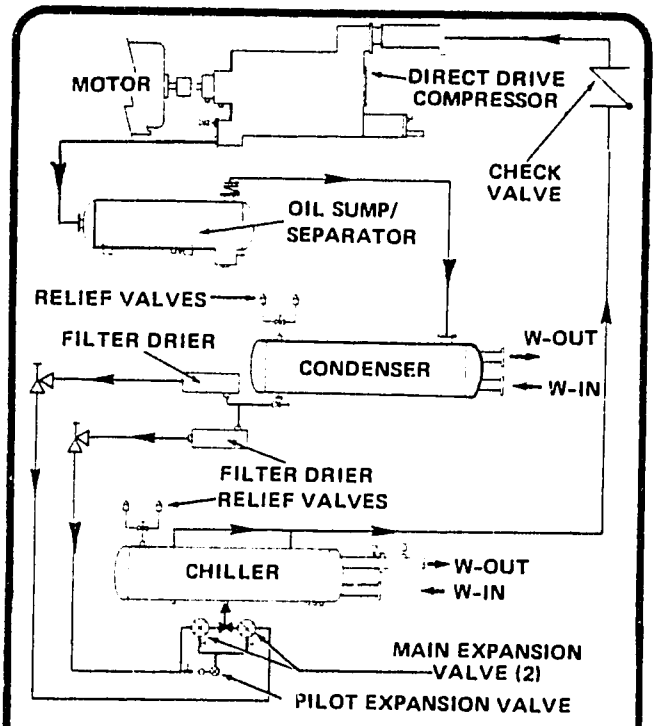

FIG. 3 TYPICAL FLOODED PCX-O

cycle. The compressor takes the refrigerant gas at low density and compresses it to a higher density. The temperature of the refrigerant gas is also increased. The dense refrigerant gas flows to the condenser where heat is removed, causing a change in the state of the refrigerant from a gas to a liquid. The refrigerant in a liquid state then flows through the filter/drier, through an expansion valve which meters the refrigerant into the evaporator chiller. There it changes its state back to a gas as it absorbs heat and evaporates. It is during this change of state that the refrigerant will extract heat from the medium being cooled. This low density cool gas then flows to the compressor where the cycle is repeated.

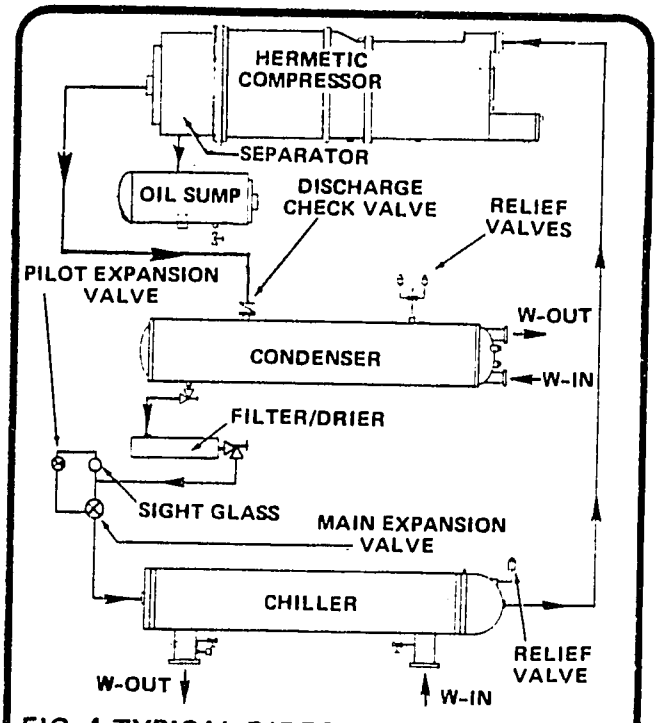

FIG. 4 TYPICAL DIRECT EXPANSION PCX-H

Operation of specific components within the refrigerant system may be found under System Components Section.

2. WATER SYSTEMS

The condenser water system on a PCX unit is an open end system and the water in the system is used to condense hot refrigerant gas into a liquid. Water is pumped through the tubes of the condenser where it picks up heat condensing the refrigerant. It then flows to a water tower, evaporative water cooler, or other cooling service, where the heat is dissipated to the atmosphere. Cooled water is picked up here and is pumped to the condenser to absorb more heat from the refrigerant.

Some units have water cooled oil coolers. The water used to cool the oil is either diverted from the input of the condenser to the oil cooler or is supplied from an exterior source. A thermally actuated valve monitors the leaving oil temperature and modulates the water flow through the cooler.

The condenser for heat recovery units is constructed with two entirely separate water circuits. Hot gas from the compressor is discharged to the condenser where the heat is absorbed by either one of the water circuits or both simultaneously, depending on the building requirements. The heat reclaim condenser features the split system to prevent contamination of the heating circuit, associated piping, and heating coils from the cooling tower water which may absorb dirt, chemicals or corrosives.

The chilled water system is a closed system and the flow pattern varies for a flooded system versus a direct expansion system. Both systems use shell and tube heat exchangers, but in a flooded system the water is pumped through the tubes while a direct expansion system, water is pumped through the shell. As the chilled water leaves from either of these systems it is monitored by electronic arrangement which controls the operation of the unit. The chilled water then flows to the cooling coils where it picks up heat from the space or item being cooled. The water is then circulated back to the pump and chiller.

Operation of specific components within the refrigerant system may be found under the Component Operation Section.

3. LUBRICATING SYSTEM

The oil in a PCX system is used to lubricate the compressor and is additionally used to dissipate heat generated within the compressor, provide a seal between the male and female rotors during compression of the refrigerant, as a hydraulic medium for capacity control, and to provide quite operation.

There are a number of variations of lubricating systems. The choice of each system is dependent upon the type of unit and its purpose. Operation of these systems can be found in the Component Operation Section.

III. OPERATION

C. COMPONENT OPERATION

1. COMPRESSOR/MOTOR ASSEMBLY

The PCX-H compressor motor is hermetically sealed and is directly connected at the compressor outlet so that both the compressed refrigerant and lubricating oil cool the motor windings. Temperature sensors are embedded in the motor windings to monitor the temperature for the motor protection system. The PCX-O compressor motor is air cooled and is connected to the compressor by a flexible coupling.

The compressor used on the Dunham-Bush, Inc., packaged chiller is a positive displacement, helical-axial flow compressor designed for use with high pressure refrigerants. Unlike centrifugal compressors, no purge system is needed.

For clarity reasons, the following account of the PCX compressor operation will be limited to one lobe on the male rotor and one interlobe space of the female rotor. In actual operation, as the rotors revolve, all of the male lobes and female interlobe spaces interact similarly with resulting uniform, non-pulsating gas flow.

1a. Suction Phase

As a lobe of the male rotor begins to unmesh from an interlobe space in the female rotor, a void is created and gas is drawn in through the inlet port - Fig. 5 - as the rotors continue to turn the interlobe space increases in size - Fig. 6 - and gas flows continuously

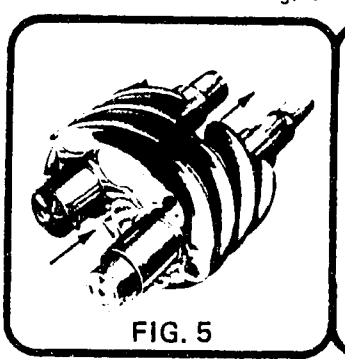

FIG. 5

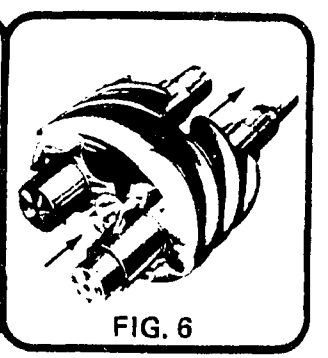

FIG. 6

into the compressor. Just prior to the point at which the interlobe space leaves the inlet port, the entire length of the interlobe space is completely filled with drawn in gas - Fig. 7.

1b. Compression Phase

As rotation continues, the gas in the interlobe space is carried circumferentially around the compressor housing. Further rotation meshes a male lobe with the interlobe space on the suction end and squeezes (compresses) the gas in the direction of the discharge port. Thus the occupied volume of the trapped gas within

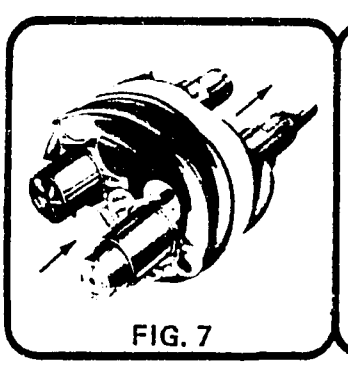

FIG. 7

FIG. 8

the interlobe space is decreased and the gas pressure consequently increased.

1c. Discharge Phase

At a point determined by the designed "built-in" compressor ratio, the discharge port is uncovered and the compressed gas is discharged by further meshing of the lobe and interlobe space - Fig. 8. While the meshing point of a pair of lobes is moving axially, the next charge is being drawn into the unmeshed portion and the working phases of the compressor cycle are repeated.

1d. Capacity Control

Compressor vapor displacement is controlled to balance the flow rate of liquid refrigerant entering the evaporator with the changing cooling demand.

The capacity control valve is located in the rotor housing as shown in Fig. 9 and 10. The movement

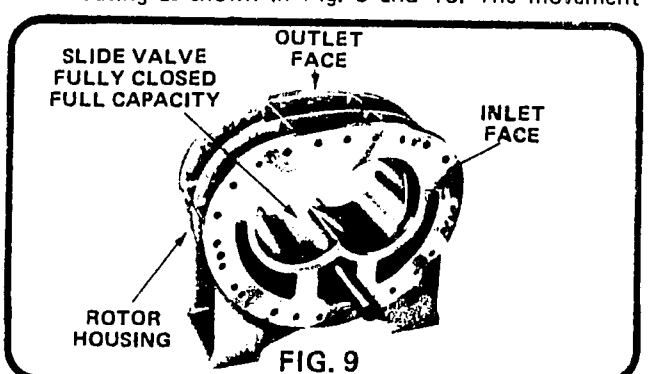

FIG. 9

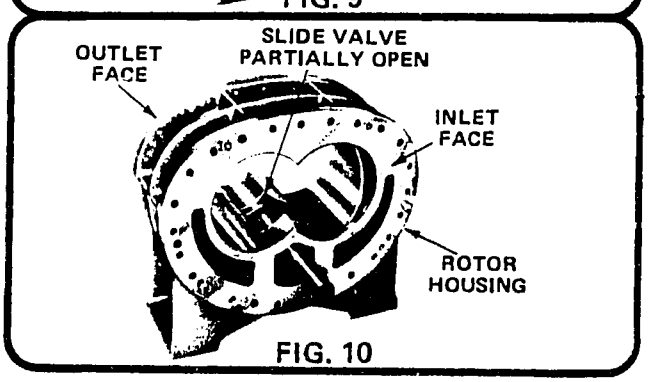

FIG. 10

of this valve along the axes of the rotors is programmed by a solid state, temperature initiated, hydraulically actuated control arrangement. When the compressor is fully loaded the slide valve is in the closed position against the valve stop as shown in Fig. 9, and all gas flows through the rotor housing as described previously. When the compressor starts to unload, as shown in Fig. 10, the compressor slide valve will move away from the valve stop. The movement of the slide valve creates an opening in the bottom of the rotor housing through which suction gas can pass back to the inlet port. As no significant amount of work has been done on the returned suction gas, no appreciable losses have been incurred. Reduced capacity is obtained from the gas remaining in the interlobe, which is compressed in the ordinary manner. In principle, as the opening in the rotor housing is enlarged the compressor displacement is reduced. Optional capacity control system information can be found under Optional Sub-System Operation.

C. COMPONENT OPERATION CONTINUED

CAPACITY CONTROL

1e. The temperature load controller (TLC) supplies power to the load solenoid valve (LSV) and unload solenoid valve (USV) to control the position of the compressor slide valve piston. Control is achieved electronically by a monitoring leaving chilled water temperature. The TLC will always act to meet a specific load demand and stabilize unit operation.

LEGEND: LTV - Load Throttling Valve; UTV - Unload Throttling Valve; SOV - Shut Off Valve; FUSV - Fast Unload Solenoid Valve; USV - Unload Solenoid Valve; LSV - Load Solenoid Valve; ■ Refrigerant Gas; ☐ Refrigerant Oil

COMPRESSOR LOADING

- **LOADING**

When energized, the load solenoid valve (LSV) opens and discharge pressure pushes the slide valve towards load, forcing oil out of the cylinder into the suction housing. Piston speed is controlled by an adjustable restrictor valve located in the oil line.

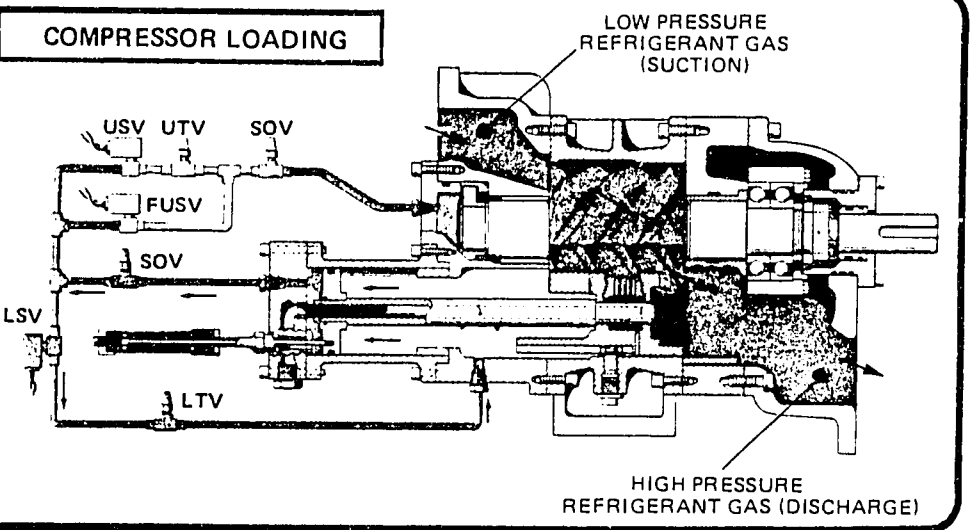

COMPRESSOR UNLOADING

- **UNLOADING**

When energized, the unload solenoid valve (USV) opens. The combination of discharge plus oil pressure on the slide valve piston will move the slide valve toward the unload position. Piston speed is controlled by an adjustable restrictor valve located in the oil line.

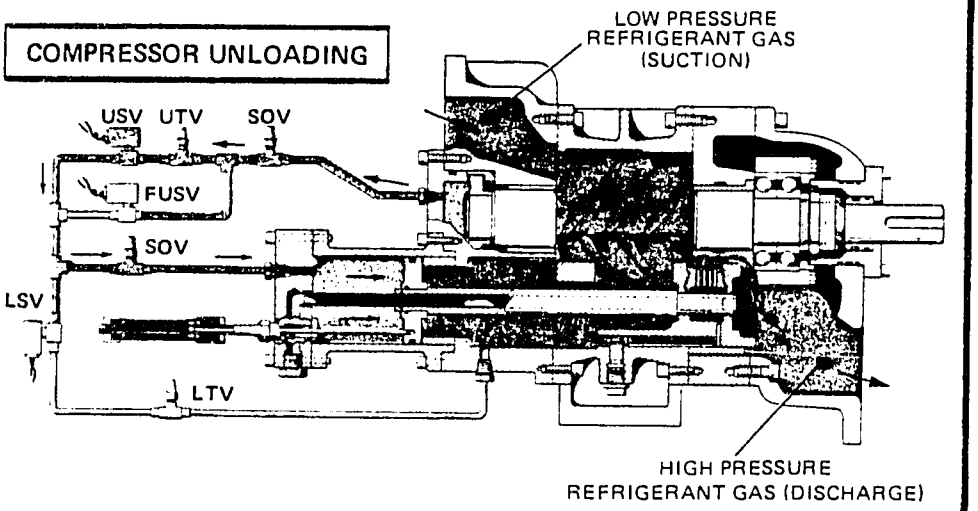

COMPRESSOR PART LOAD

- **PART LOAD**

The unit will remain in the part load position as long as the leaving chilled water temperature remains at the desired temperature. Both load and unload solenoid valves will be closed and the piston will be stationary at the part load position.

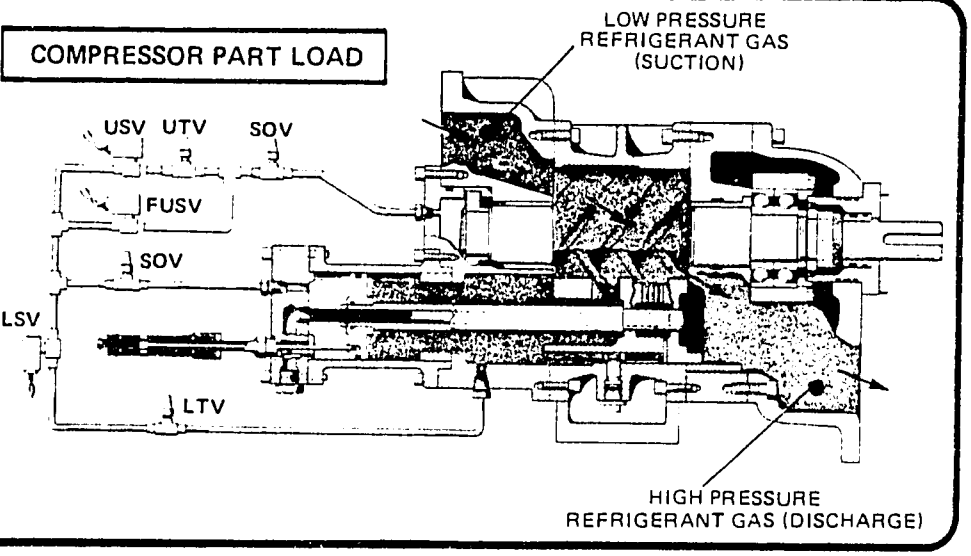

2. LUBRICATION SYSTEM OPERATION

2a. Oil Separation and Collection

Prior to entering the condenser, the discharge refrigerant vapor and the oil are mechanically separated. The oil/vapor mixture is discharged from the compressor to a separator, or combination sump/separator (depending upon the unit model). A liquid injection arrangement controlling discharge temperature at the compressor insures the proper conditions necessary for efficient oil separation.

- **Hermetic Units** - Units featuring a hermetic compressor have an oil separator mounted at the compressor discharge and the oil drains into a separate sump. The separator is constructed with a knitted mesh wire wound on a perforated metal mandrel. The oil droplets collect on the wire mesh and are drained into the oil sump. The discharge refrigerant vapor is piped from the separator directly to the condenser.

- **Open Drive Units** - Units featuring a direct drive compressor incorporate a combination oil/sump separator in a single vessel. The upper portion of the shell contains mesh beds which serve to remove the oil from the discharge vapor. The bottom portion of the shell acts as a sump for the collected oil. The discharge refrigerant vapor is piped from the upper portion of the sump/separator to the condenser.

- **Oil Sump Heaters** - Electric resistance heaters are located in the lower portion of the sump vessel and serve to vaporize excess refrigerant that may have diluted the oil during shut-down, and heat the oil to a suitable temperature for start-up. Normally the heaters must be energized a minimum of 24 hours and the oil sump temperature must be at a minimum of 100°F (38°C) prior to start-up of the unit.

- **Oil Sump Sight Glasses** - Sight glasses are provided in the sump vessel to monitor the oil level. When the unit is shut-down and the oil is at design discharge temperature, the normal oil level is 1/2 to 1/3 visible in the (top) sight glass.

2b. Oil Pumps

A gear type oil pump is used to provide oil at sufficient pressure to lubricate the compressor and actuate the capacity control slide valve. The pump may be either hermetic or open drive, depending on the unit application.

- **Hermetic Oil Pump** - The hermetic oil pump and motor are located within the oil sump vessel utilizing the oil to cool the motor windings. Thermal switches imbedded in the motor windings are interlocked with the control panel and serve to protect the motor from overheating. To avoid circulation of solid contaminants, a 100 mesh strainer is located at the pump suction. A pressure relief valve located on the discharge side of the pump inside the vessel, is factory set and sealed for 53 psid (365 kPa) relief pressure.

- **Open Drive Oil Pump** - Located exterior of the oil sump, the open pump is coupled to a motor. To avoid circulation of solid contaminants, a 100 mesh strainer is located at the pump suction. Service valves and a check valve are provided for ease of maintenance.

2c. Oil Systems

There are two basic types of oil system piping arrangements used on packaged chillers that serve the compressor's lubrication and hydraulic purposes; a partially pumped system and a fully pumped system. Typical lubrication systems are shown in Fig. 11 thru 13.

NOTE: Net oil pressure is the oil pressure supplied to the bearings minus the discharge pressure at the compressor.

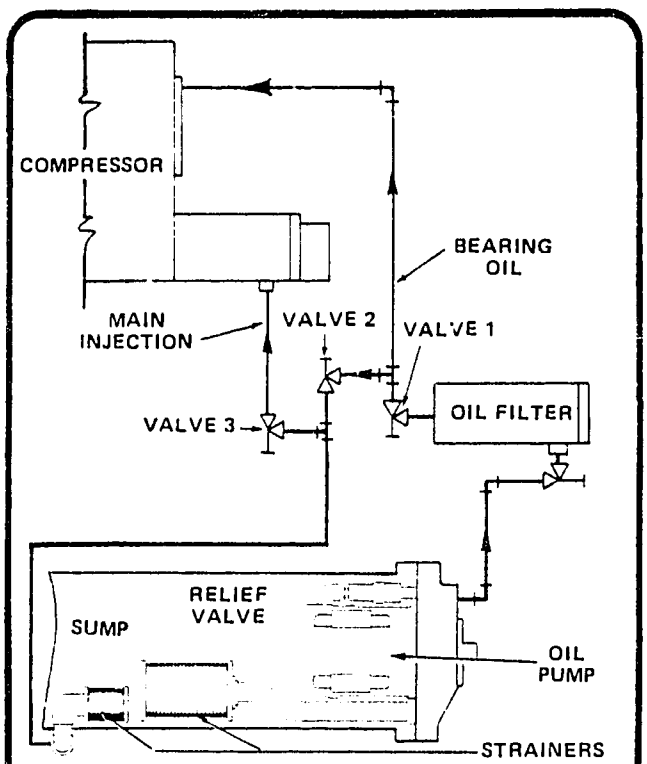

FIG. 11 - PARTIALLY PUMPED WITH HERMETIC OIL PUMP

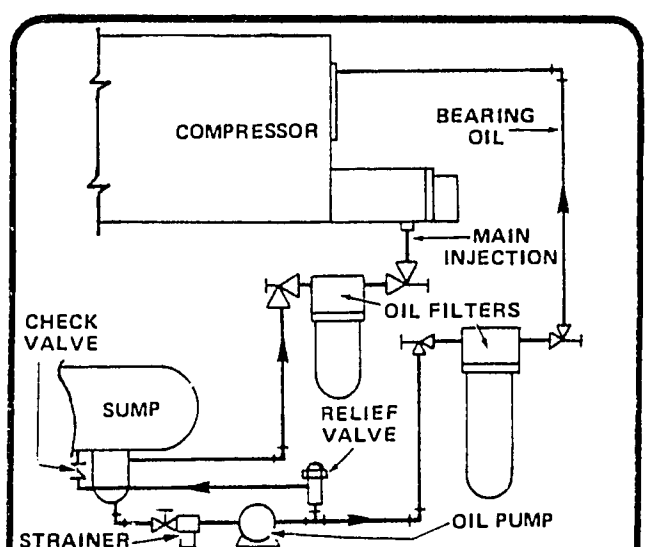

FIG. 12 - PARTIALLY PUMPED OIL SYSTEM WITH OPEN OIL PUMP

- **Partially Pumped Oil System** - In a partially pumped lubrication system, strained oil is pumped through an oil filter to a three valve manifold. Valve 'one' and valve 'three' as shown in Fig. 11 are strictly service valves and remain fully open. Valve #2 is used to adjust the required net oil pressure.

- **Fully Pumped Oil System** - Both injection and bearing oil are pumped in the fully pumped oil system. Net oil pressure is maintained by a regulating valve mounted at the oil pump discharge. The regulating valve may be adjusted to obtain the required net oil pressure.

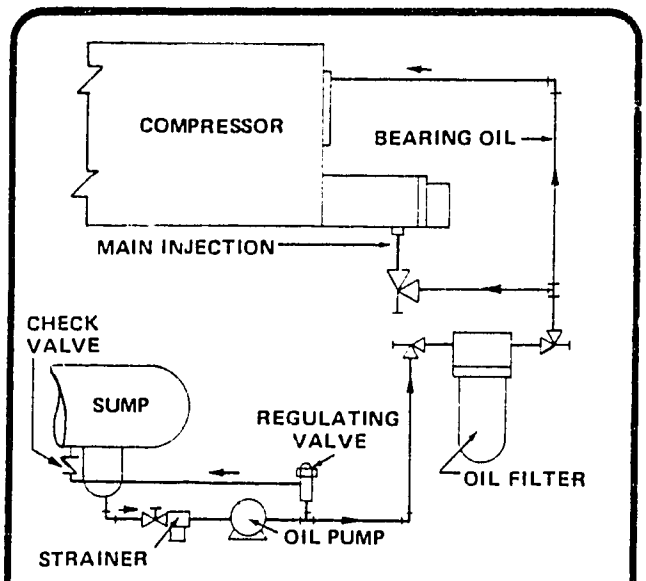

FIG. 13 FULLY PUMPED OIL SYSTEM

2d. Oil Filters

The filters used in the oil system consist of a shell with replaceable 10 micron pleated paper element(s). The normal operating pressure drop across the filter is 1 thru 2 PSID (6.9 thru 13.8 kPa) with a new element. The maximum allowable pressure drop across the filter is 6 PSID (41.4 kPa). Service valves are provided for easy maintenance.

2e. Evaporator Oil Return System (Flooded Chiller, Low Temperature Direct Expansion Chiller)

Powered by discharge gas, a jet pump eductor is used to remove residual oil that accumulates in the chiller. This device is used on all flooded chillers, and direct expansion chillers with low suction temperature applications.

- **Flooded Chiller** - The flooded chiller has 4 to 5 valve taps in the chiller shell which are connected to the suction of the jet pump. The bottom tap should be opened partially for pulldown and overload conditions, when the liquid level is depressed. For high chiller liquid levels, when the load is low, the top tap, generally, should be closed unless field conditions require otherwise. The remaining valve taps permit oil pick-up as the level varies. These taps should be open somewhat, and the one that is closest to the normal liquid level, when operating at the design condenser leaving water temperature, should be wide open.

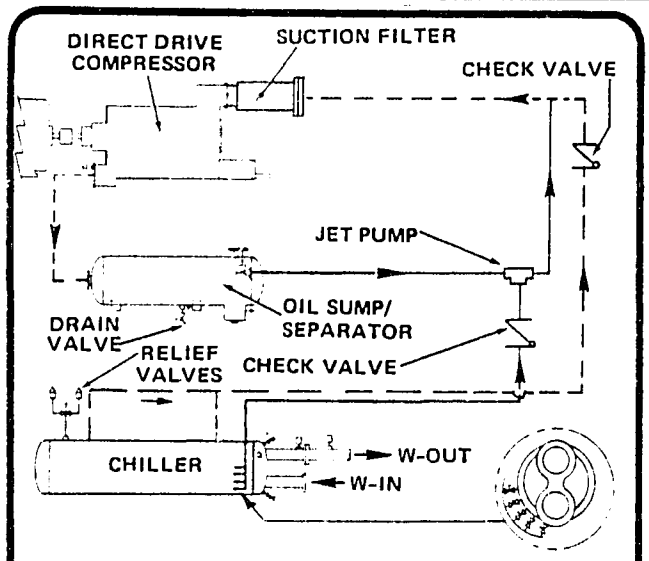

FIG. 14 JET PUMP (FLOODED CHILLER)

NOTE: Avoid having valves wide open that draw only gas from the chiller.

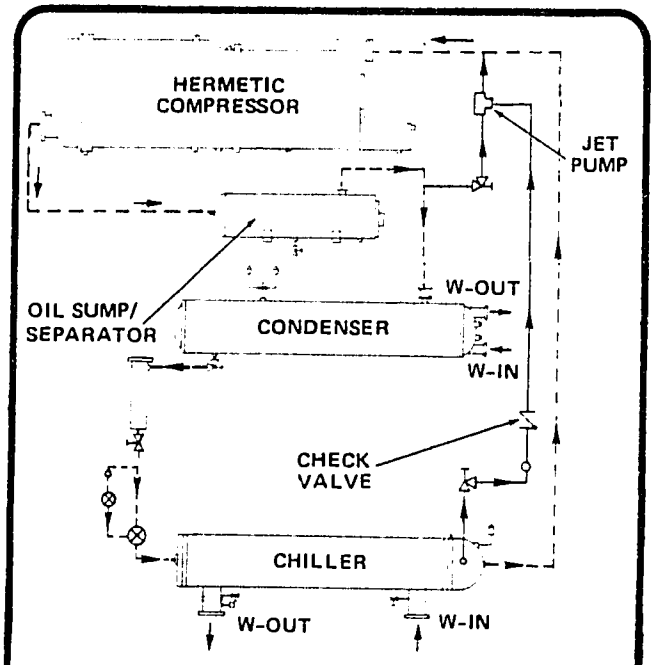

FIG. 15 JET PUMP DIRECT EXPANSION

- **Direct Expansion Chiller** - The direct expansion chiller has one valve tap in the chiller suction head which is connected to the suction of the jet pump. Both the valve at the chiller head and the valve at the jet pump remain fully open.

3. OIL COOLING SYSTEM OPERATION

Liquid injection or a water cooled oil cooler is supplied for oil cooling.

3a. Liquid Injection

Liquid injection is used to cool the oil and refrigerant vapor, and is controlled within the compressor during

compression to insure efficient oil separation, minimize refrigerant solubility in the oil, and maximize lubrication properties. By controlling oil temperature on hermetic units, the liquid injection system, additionally, facilitates the dissipation of heat from the motor windings.

- **Normal Operation** - This system is designed to hold the oil temperature above 135°F (57.2°C) to minimize excessive oil dilution. This is accomplished by a thermostat sensing discharge temperature. The liquid injection solenoid will de-energize when the discharge temperature reaches the design cut-out setting for the thermostat, as noted on the unit wiring diagram accompanying the unit. The solenoid will cycle to maintain 140°F ± 5°F (60°C) oil temperature, minimizing dissolved refrigerant in the oil.

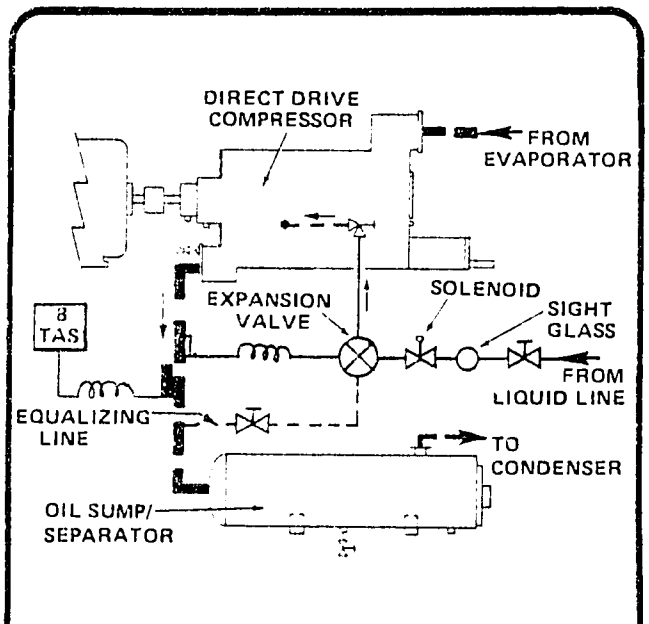

FIG. 16 LIQUID INJECTION

To insure proper oil separation by maintaining discharge superheat under all load conditions, the thermo-expansion valve is factory pre-set to maintain a minimum 40° thru 50F° (22.2° thru 27.8C°) discharge superheat at 100% load. On any given unit, the controls should be set to maintain a minimum of 35F° (19.4C°) superheat at any load.

- **Heat Reclaim/R-12 Units** - The liquid injection assembly for heat reclaim and R-12 units operate in the same manner except that the liquid injection throttling device is a temperature operated valve that will react to discharge temperature only rather than discharge superheat.

3b. Seal Oil Cooling (Open Drive Units)

Seal oil cooling is provided to control the viscosity and temperature of the oil supplied to the shaft seal cavity under all operating conditions. The temperature of the oil entering the seal cavity is maintained at 115°F ± 5°F (46°C ± 2.8°C). The major components of the seal oil cooling system consist of a liquid line solenoid, a temperature operated expansion valve, a direct expansion heat exchanger and a safety thermostat. A check valve is provided upstream of the seal cavity to maintain a full oil level in the cavity, preventing refrigerant leakage through the seal during shut-down.

- **Normal Operation** - The seal oil cooler liquid line solenoid energizes on start-up allowing liquid refrigerant to enter the heat exchanger. The safety thermostat is electrically bypassed during start-up by a timer until conditions stabilize for normal operation. The expansion valve modulates refrigerant flow entering the heat exchanger by responding quickly to temperature changes in the oil entering the seal cavity.

3c. Water Cooled Oil Coolers (Low Temperature or Special Applications)

Constructed with an externally finned tube bundle mounted in a steel shell, the heat exchanger provides the required oil cooling capacity under all operating conditions. A thermostatically actuated two way valve regulates the water flow through the tubes, as the sensing element monitors the leaving oil temperature. The baffle arrangement in the shell side channels the oil flow for a more effective heat transfer.

4. HIGH/LOW SIDE COMPONENT OPERATION

4a. Discharge Check Valve

To prevent migration of liquid refrigerant from the condenser into the separator during shutdown, a discharge check valve is used. Located between the separator and condenser, the check valve also prevents excessive spin-down of the compressor and allows the unit to be pumped down for servicing.

4b. Condenser

The condenser is a 'shell and tube' heat exchanger which serves to condense the discharge refrigerant vapor by removing heat. Water is circulated through the tubes absorbing heat from the discharge vapor condensing in the shell side of the externally finned copper tube bundle. The water flow rate or temper-

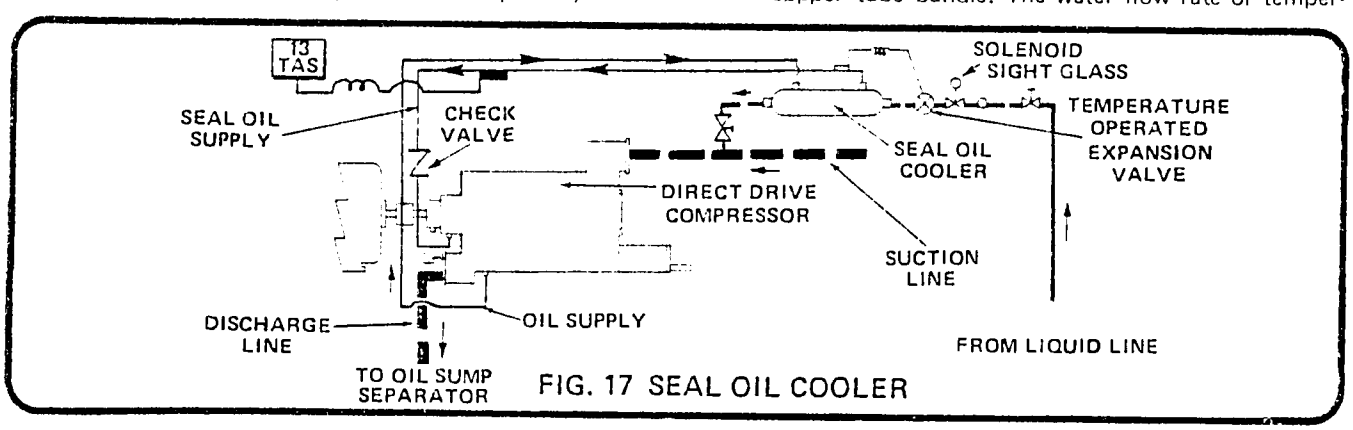

FIG. 17 SEAL OIL COOLER

ature will have a significant effect on refrigerant condensing pressures under all operating conditions.

Dual refrigerant relief valves are mounted on the condenser vessel serving as a protection device.

- **Heat Reclaim Condenser** - As heat reclaim applications are specialized, the most economical operation must be evaluated for each job. Generally, when the heat reclaim water circuit is operating, the condensing pressure elevates because of a high entering water temperature, resulting in a higher kilowatt draw. When or if the tower water should operate during the heat reclaim cycle depends upon the heating and cooling load characteristics, and the percentage of heat rejected for heat reclaim.

4c. Filter Drier

The filter/drier is composed of a strainer and replaceable dessicant cartridges which remove contaminants, acid, and moisture from the refrigerant. A shut-off valve is at the outlet end of the filter/drier.

4d. Throttling

Throttling liquid refrigerant serves to regulate the refrigerant flow into the chiller while maintaining the required evaporating temperature. Throttling is accomplished by a multiple valve arrangement. The pilot thermo valve is mounted in a branch liquid line and is used in conjunction with the pilot operated solenoid (P.O.S.) thermal expansion valve which is located in the main liquid line.

- **Pilot Thermo Valve** - The pilot thermo valve meters a branch refrigerant liquid line while sensing either leaving water temperature or suction temperature, and serves to supply a pilot signal to the P.O.S. valve.

- **Pilot Operated Solenoid Valve** - The P.O.S. valve positions according to the signal pilot supplied from the pilot thermo valve. During shutdown the solenoid valve closes the pilot line allowing the valve to close. A manual opening stem is provided for service purposes and must be fully counterclockwise for normal operation.

4e. Chillers

Designed for a fixed flow rate, the "shell and tube" heat exchanger transfers heat from the medium being cooled to the refrigerant, causing the refrigerant to vaporize. The two types of chillers are flooded and direct expansion. Both types have pressure taps at the water inlet and outlet connections, a bulbwell for the water freeze-up thermostat, and a temperature load control sensor.

- **Flooded** - Flooded chillers have liquid refrigerant flooding the lower portion of the shell with the medium being cooled flowing through the tubes. The tubes are externally finned so that the refrigerant will have a large surface area to extract heat from the medium being cooled. Also supplied on the flooded chiller is a dual relief valve to serve as a protection device.

- **Direct Expansion** - The refrigerant enters the chiller through a distributor where it is directed into the tubes (the evaporating refrigerant is at a rate depending upon the cooling load). The tubes are of the patented Inner-Fin® extended surface design which improves heat transfer while minimizing refrigerant pressure drop, permitting a compact and efficient chiller design. The refrigerant vapor passes through an effective filter built into the suction head of the chiller (for additional system protection). The chiller is provided with a single relief valve to protect it from refrigerant over pressure.

4f. Suction Check Valve

Located in the piping between the compressor and the chiller, they are used to prevent excessive "spin-down", equalization of pressure between the compressor and chiller, and to prevent migration of oil into the chiller.

4g. Suction Filter

- **Flooded Units** - Units with a flooded chiller have a 10 micron suction filter mounted on the compressor at the compressor inlet.

- **Direct Expansion Units** - Units with a direct expansion chiller have a dacron felt filter located in the suction head of the chiller.

D. OPTIONAL SUB-SYSTEM OPERATION

1. XTRATHERM VAPOR INJECTION SYSTEM

The vapor injection system is used to provide additional subcooling to the liquid refrigerant supplied to the evaporator for increased refrigeration effect and system capacity. Its main components are a subcooler, subcooler thermo-expansion valve, evaporator pressure regulator, check valve, solenoid valve, vapor injection filter, oil feed valve, dual feed lines to the pilot valve of the main thermo-expansion valve and a minimum load limit switch.

A reed switch is located on the slide valve indicator at approximately 65% of full load. It may be adjusted between 40% and 75% to suit job conditions. The switch is used to control the solenoid which shuts down the vapor injection system on the off cycle or whenever the system becomes ineffective. When the capacity of the compressor reaches the load at which the reed switch is set, the solenoid will open and a small portion of the liquid refrigerant is diverted through the expansion valve to the subcooler. This refrigerant evaporates and in the process absorbs some of the heat of the liquid refrigerant flowing through the subcooler to the evaporator. The evaporator pressure regulator is used to control the pressure leaving the subcooler, which keeps the subcooling liquid temperature relatively constant.

2. HOT GAS BYPASS – UNLOADED START

Hot gas bypass unloaded start is accomplished by diverting gas from the compressor discharge port through a solenoid valve to the compressor suction port. The bypass line is open at start-up and the solenoid valve is used to close it. The purpose for unloading is that the compressor is designed to start under a low load (torque) condition, such as when the low

D. OPTIONAL SUB-SYSTEM OPERATION CONT.

side and high side pressures are equal (balance). The equal pressures allow the compressor and motor to reach operating RPM before the solenoid closes and compression starts. The motor therefore draws fewer inrush amps. In the case of open compressor units, unloaded start may allow use of a smaller horsepower motor.

3. HOT GAS BYPASS CAPACITY CONTROL

Hot gas bypass capacity control is used to feed hot gas directly into the chiller when the compressor's load falls to 10% or less. When this occurs, a solenoid valve in the capacity control line is energized by a reed switch in the slide valve indicator. The introduction of hot gas provides a stable refrigerant flow and keeps the machine from short cycling under low load conditions.

4. REED SWITCH

The reed switching assembly is used in conjunction with a flip-pac relay which controls various system components at different percent slide valve positions. Adjustments may be required upon installation to balance the unit performance with load characteristics.

- **High/Low Limit Switches** - These serve to limit slide valve positioning from extending beyond the range of application. The low limit switch is adjusted correctly when the differential temperature across the chiller is 1F° to 2F° (.56C° to 1.12C°). The high limit switch is factory set and should be adjusted only by an Authorized Dunham-Bush serviceman.
- **Hot Gas Capacity Control Limit Switch** - (If applicable) is used in conjunction with the low limit switch.
- **Large TX Valve Limit Switch** - (If applicable) Refer to the specific unit wiring diagram for correct positioning.

For any additional information, refer to the specific unit wiring diagram or to Dunham-Bush Service Bulletin No. SR109A.

E. TYPICAL PIPING SCHEMATICS

The piping schematics which appear on the next three pages are typical only. These schematics depict control systems and refrigerant and oil flow through the unit to furnish you with an understanding of the screw compressor packaged chiller.

Shown below are the symbols, codes and items with their descriptions which appear on the piping schematic.

TEMPERATURE AND PRESSURE CONTROL

CODE	DESCRIPTION
2TAS	Freeze Up Thermostat
7TAS	Low Refrigerant Temp. Thermostat
8TAS	Low Discharge Temp. Thermostat
12TAS	Oil Temperature Thermostat
13TAS	Seal Oil Temperature Thermostat
1PS	Hi-Low Refrigerant Pressure Safety Sw.
2PS	Low Refrigerant Pressure Unload Sw.
3PS	Low Oil Pressure Safety Sw.

PIPING SYMBOLS

SYMBOL	DESCRIPTION	SYMBOL	DESCRIPTION
	Refrigerant		Hand Valve
	Refrigerant & Oil		Hand Angle Valve
	Oil		Solenoid Valve
	Control		Check Valve
	Remote Bulb Capiliary Tubing		Sight Glass
	Unloaded Start		Expansion Valve
	Hot Gas Bypass		Pilot Expansion Valve
	Relief Valve		

COMPONENTS

ITEM	DESCRIPTION	ITEM	DESCRIPTION
1	Refrigerant Relief Valve, Chiller	17	Compressor Oil Pressure Balancing Valve
2	Refrigerant Relief Valve, Condenser	18	Refrigerant Expansion Valve
3	Liquid Injection Angle Valve	19	Refrigerant Pilot Expansion Valve
4	Oil Pressure Relief Valve	20	Liquid Injection Expansion Valve
5	Water Temperature Bulbwell	21	Seal Oil Expansion Valve
6	Unloader Solenoid Valve Assembly	22	Unloaded Start Solenoid Valve
7	Oil Injection Angle Valve	23	Hot Gas Bypass Solenoid valve
8	Seal Oil Solenoid Valve	24	Suction Check Valve
9	Load Control Temperature Sensor	25	Oil Filter
10	Water Flow Switch	26	Oil Strainer
11	Liquid Injection Solenoid Valve	27	External Oil Pump
12	Sump Oil Drain	28	Oil Return Check Valve
13	Sump Oil Heater	29	Jet Pump
14	Chiller Freeze Up Bulbwell	30	Jet Pump Check Valve
15	Discharge Refrigerant Check Valve	31	Suction Filter
16	Unloader Throttling Valve		

III. OPERATION

E. TYPICAL PIPING SCHEMATICS CONTINUED

NOTE: DO NOT use this piping diagram to troubleshoot your unit. It is typical only and may not reflect the components provided on your unit.

TYPICAL PIPING SCHEMATIC (PCX180H)

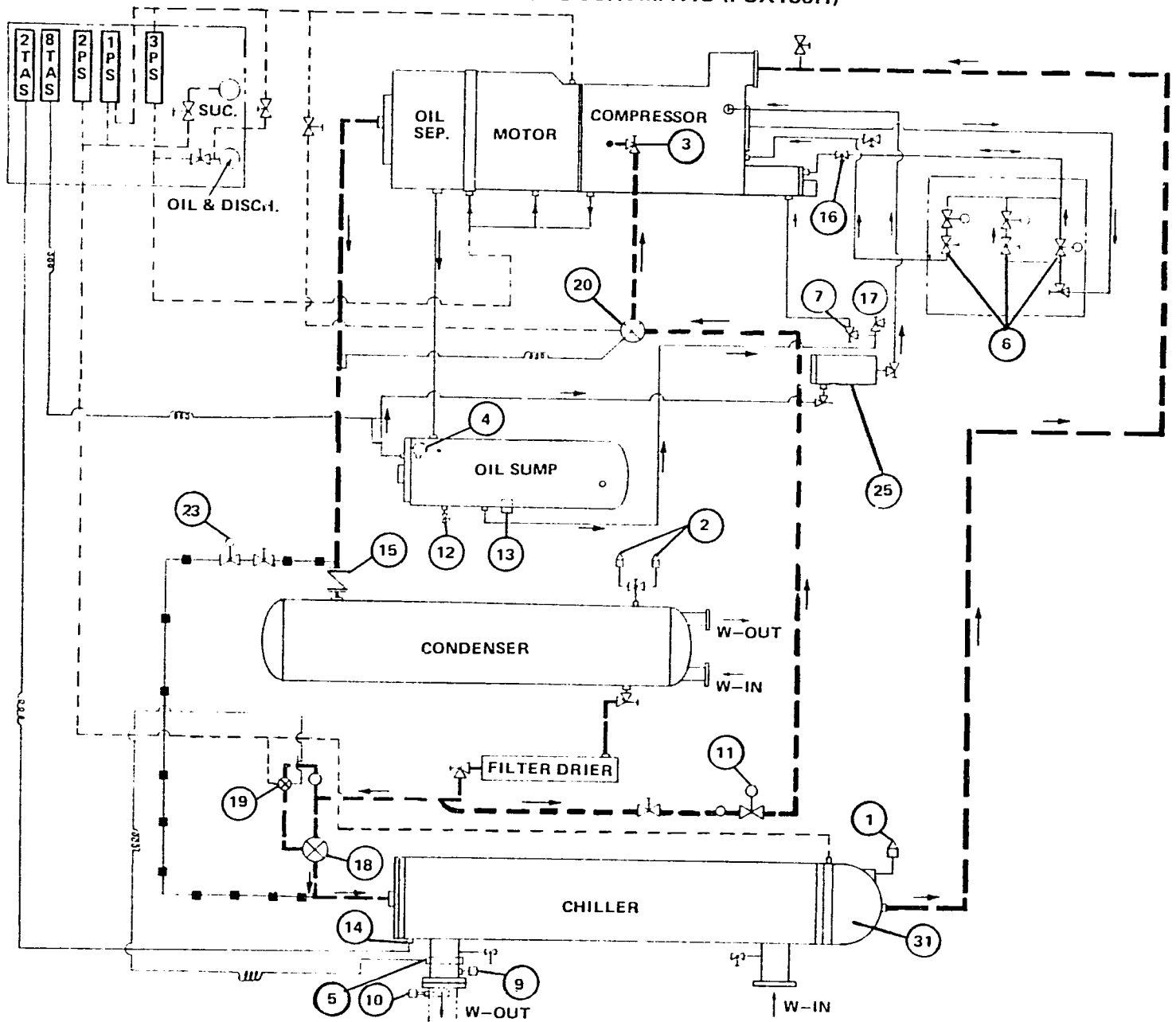

III. OPERATION

E. TYPICAL PIPING SCHEMATICS CONTINUED

NOTE: DO NOT use this piping diagram to troubleshoot your unit. It is typical only and may not reflect the components provided on your unit.

TYPICAL PIPING SCHEMATIC - (PCX290-0)

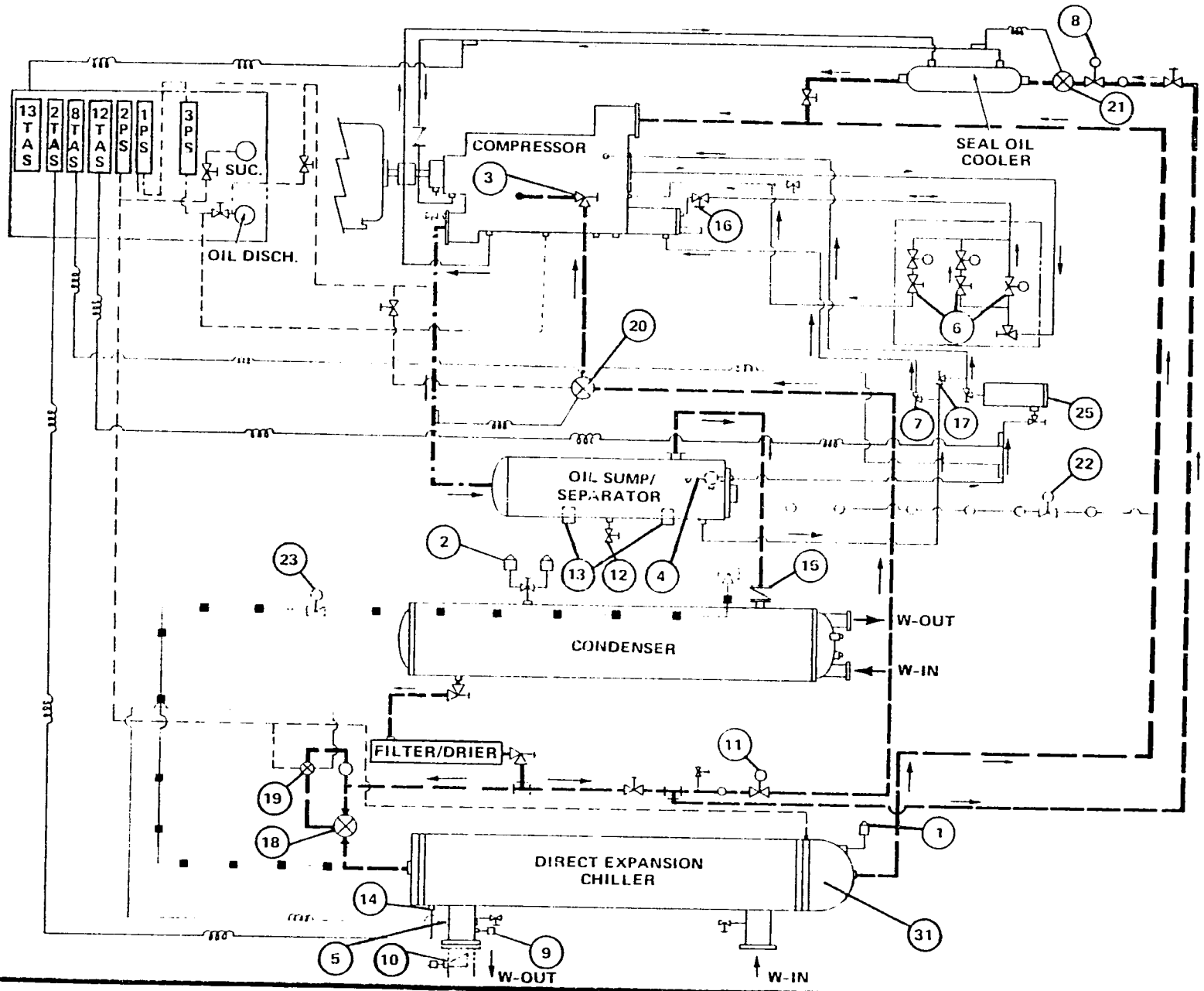

III. OPERATION

E. TYPICAL PIPING SCHEMATICS CONTINUED

TYPICAL PIPING SCHEMATIC FLOODED UNITS

NOTE: DO NOT use this piping diagram to troubleshoot your unit. It is typical only and may not reflect the components provided on your unit.

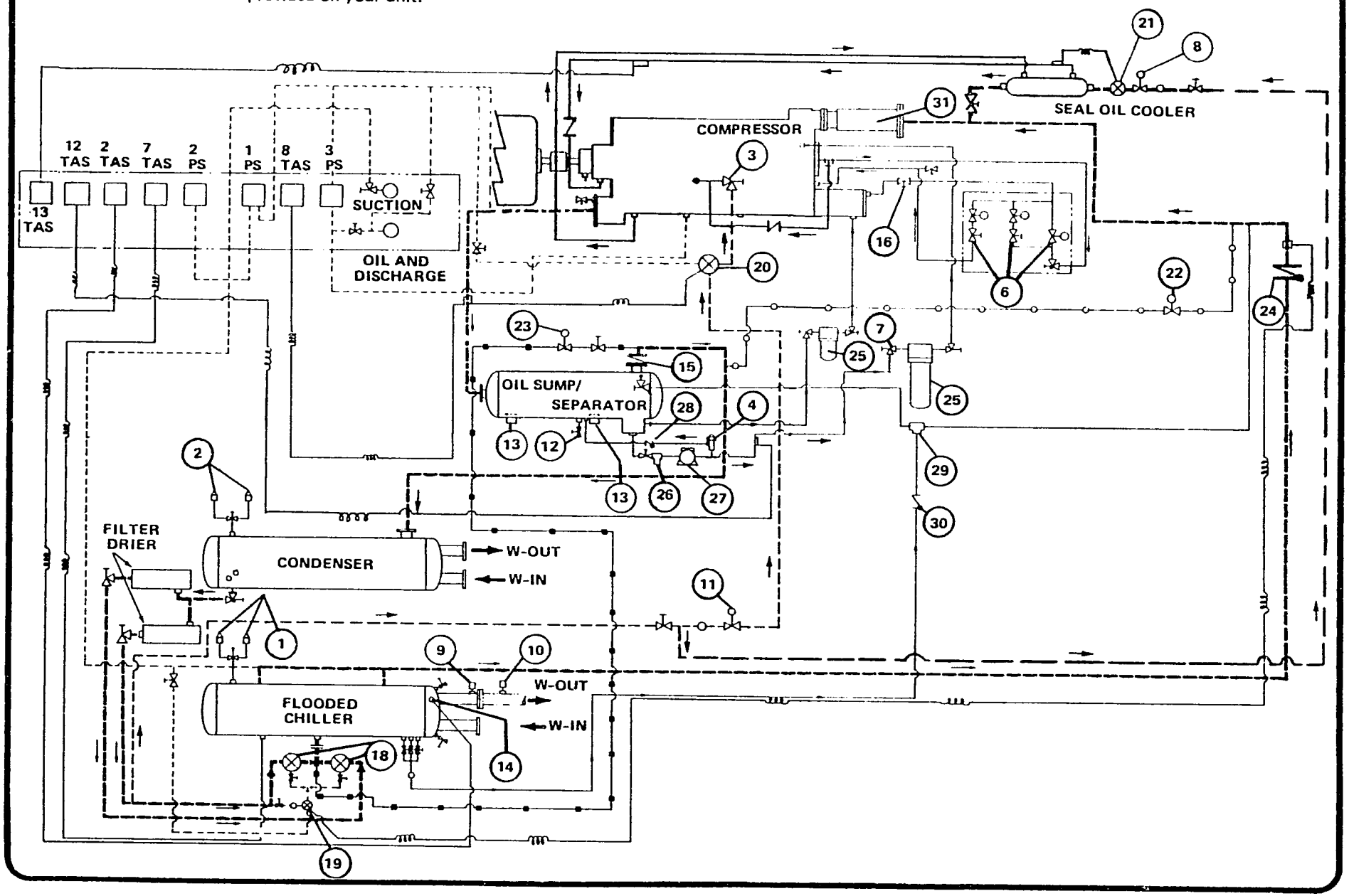

III. OPERATION

F. FUNCTIONS OF ELECTRICAL CONTROLS

Description of controls and the wiring schematics in this manual are typical only. Wiring schematics for a specific unit are shipped with the unit. The wiring schematic also lists control settings.

The electrical panel contains not only controls but also gauges and lights to help determine the phase and quality of operation. The gauges monitor the suction, discharge and discharge oil pressure. The difference between the discharge oil pressure and discharge pressure is the net oil pressure. It should be noted that all gauges should be closed except when they are being read. Indicating lights reflect the following conditions or phases of the unit.

1. LIGHTS

1LT - **Power on - integral part of on-off switch (red or white)**

2LT - **Unit is off on safety controls (red)**

3LT - **Oil pressure below minimum limits (red)**

4LT - **Anti-recycle timer is in the timing phase (green)**

5LT - **Start up delay after the oil pump has started (amber)**

2. MANUAL CONTROLS

1CB - **Control Circuit Breaker**

2CB - **Oil Sump Heaters Circuit Breaker**

1SS - **Master Control Switch - Completes a circuit enabling the unit to start.**
Hermetic compressors - If the unit shuts down because a safety switch opened, the switch must be pushed to the "reset" position to reset the motor winding protector (1TAS) and the oil circuit.

Open compressors - If the unit shuts down because of an oil failure, the switch must be pushed to the "off" position to reset the oil circuit.

3. SAFETY CONTROLS

2FU - **Compressor Motor Housing Fuse**

1TAS - **Hermetic Compressor Motor Winding**
Protects the motor from overheating by opening the safety circuit if the temperature at any of the three strategically placed sensors exceeds the preset temperature (manual reset).

OL - **Compressor and Oil Pump Starter Overloads**
Provides locked rotor and overcurrent protection (manual reset).

1PS - **Hi-Lo Pressure Switch**
Protects against high discharge pressure and low suction pressure. If the discharge pressure exceeds the preset pressure, the contact will open. It must be manually reset on high pressure cutout. If the suction pressure falls below the pre-set pressure, the contact will open. It will automatically reset on low pressure cutout.

13TAS - **Seal Oil Temperature Thermostat Open Compressors**
Protects against excessive temperature of the oil cooling the compressor seal. Opens if temperature rises over the preset temperature (see 12TR) (automatic reset).

12TAS - **High Oil Temperature**
Senses oil temperature after the oil pump. Protects against high oil temperature by opening if the temperature rises above the preset temperature (automatic reset).

7TAS - **Low Refrigerant Temperature Protection Flooded Units**
Senses refrigerant temperature in flooded chiller. Will open if temperature falls below preset temperature (automatic reset).

2TAS - **Freeze Up Thermostat**
Monitors the chilled medium. If the temperature falls below preset temperature, contact will open (automatic reset).

FLS - **Chiller Flow Switch**
Monitors the flow of the chilled medium. Contact will open if flow falls below preset level.

6TAS - **Oil Pump Motor Winding Protector - Hermetic Oil Pump Only**
Temperature is monitored by thermostats embedded in the motor winding. Contact will open if preset temperature is exceeded (automatic reset).

CWS - **Chilled Water Pump Starter**
Auxiliary contact on starter is closed whenever circuit to chilled water pump motor is closed.

1TR - **Anti-Recycle Timer**
Prevents compressor from starting more than three times in one hour. Completes safety circuit.

4. AUTOMATIC AND OPERATING CONTROLS

HTR - **Oil Sump & Compressor Motor Housing Heaters**
Must be operating a minimum of twenty-four (24) hours and the sump oil temperature must be at a minimum of 100°F (38°C) prior to start-up. They do not operate during compressor operation.

1CR - **Master Control Relay**
When all safety controls are closed, relay will close locking itself in and completing a circuit to the remainder of the control circuit.

1M - **Oil Pump Starter**
Starts oil pump and completes circuit to the remainder of the control circuit.

3TR - **Oil Pump Shut Down Time Delay**
Starts at same time as oil pump starter, contacts are timed to open circuit to oil pump starter after 60 seconds delay if oil pressure is not proved.

3PS - **Oil Pressure Switch**
Protects compressor against loss of oil pressure. Opens circuit to oil pressure failure time delay (2TR) when predetermined pressure is reached. If pressure is not reached the timer will time out.

2TR - **Oil Pressure Failure Time Delay**
Begins timing for 20 seconds upon operation of oil pump starter, or if an oil failure is sensed by 3PS. If oil has not reached predetermined pressure, 3PS will remain closed and in twenty (20) seconds the contact will open and shut down the system (manual reset).

F. FUNCTIONS OF ELECTRICAL CONTROLS CONT.

4TR - Start-Up Delay
Begins timing for 60 seconds when the oil pump starter operates. Will close the circuit to the compressor control relay (3CR) in one (1) minute. The purpose is to lubricate the compressor and allow the compressor to unload before starting.

2CR - Transfer Relay
Activates when the oil pump starter operates. Locks in the oil pump starter and shuts down the oil sump and compressor heaters.

3CR - Compressor Control Relay
Completes a circuit to the temperature load controller (TLC), compressor starter control circuit, elapsed time indicator (6TR), seal oil thermostat by-pass timer (12TR), seal oil cooler solenoid (13SOL), liquid injection valve solenoid (8SOL), and opens the circuit to the fast unload solenoid (6SOL) to provide unloaded start.

2PS - Low Suction Pressure Unload Switch
Flooded Chillers - senses suction pressure and will complete a circuit to the fast unload solenoid (6SOL) if the pressure falls below the preset level. Direct Expansion Chiller - senses suction pressure completing a circuit to the fast unload solenoid (6SOL), the lock in relay (4CR) and the expansion valve solenoid when the pre-set pressure is reached.

4CR - Lock In Relay - Direct Expansion Chiller
When the suction pressure switch (2PS) closes upon low pressure and pumps the unit down, this relay will be energized, locking-in itself and the expansion valve solenoid (4SOL).

6TR - Elapsed Time Indicator
Indicates the actual amount of hours the compressor has operated.

12TR - Seal Oil Thermostat Bypass Timer
When energized will bypass the seal oil thermostat (13TAS) for a period of four (4) minutes to allow the cooled oil to flow from the seal oil cooler to the compressor seal preventing complete shutdown of the system. If the seal oil temperature has not returned to the preset maximum in this time, the system will shutdown.

4SOL - 5SOL - Expansion Valve Solenoids
Controls flow of the refrigerant to the expansion valves used to meet the required refrigeration or air conditioning load.

8SOL - Liquid Injection Solenoid
Controls flow of refrigerant to the expansion valves used to control the operating temperature of the compressor.

8TAS - Low Discharge Temperature Thermostat
If the discharge temperature is not sufficient, this control will open preventing the liquid injection solenoid from operating.

9CR - Holding Relay
Controls the large expansion valve solenoid on units with direct expansion chillers. Will open or close the solenoid depending upon the information received from the reed switches (1RS and 2RS

5RS & - 6RS - Reed or Proximity Switches
Located on the slide valve indicator, they are activated by a magnet traveling in relationship with the slide valve. They control the large expansion valve solenoid through holding relay 9CR.

1SOL - Load Solenoid Valve
When energized, it provides a path to dissipate hydraulic pressure on the slide valve piston which allows discharge refrigerant gas pressure to move the slide valve in the load direction.

2SOL - Unload Solenoid
When activated allows pressurized hydraulic fluid to flow through a metering valve to the slide valve piston causing it to move in the unload direction.

6SOL - Fast Unload Solenoid
Performs the same function as the unload solenoid except that it does not have a metering valve. It operates at start up to provide a minimum load and when the suction pressure falls below the preset pressure of the Low Suction Pressure Unload Switch (2PS)

8SOL - Liquid Injection Solenoid Valve
When activated permits liquid refrigerant to flow to the liquid injection expansion valve.

13SOL - Seal Oil Cooler Solenoid Valve
When energized allows liquid refrigerant to flow to the seal oil cooler expansion valve.

TLC - Temperature Load Controller
The temperature load controller (TLC) controls a hydraulic cylinder giving the unit an infinitely variable capacity control. It senses the temperature of the chilled water through a sensor located at the chilled water outlet connection. As the water temperature rises or falls, the TLC will signal the unloader system to increase or decrease the compressor capacity to match the load and keep the chilled water at the preset temperature.

When the TLC receives a signal from the chilled water temperature sensor that the load has increased, it completes a circuit to the load solenoid causing the compressor to load. After the required capacity of the compressor is reached the load solenoid will be de-energized. The TLC will continually monitor the temperature sensor completing and opening circuits to the load and unload solenoids as necessary.

The TLC also senses the current draw of the motor through a current transformer located in the starter control panel. If the motor load reaches 100% of the preset maximum load setting, the unload solenoid will be energized and the compressor will unload. The current control will override all other controls in the auto or manual positions.

9'31

5. HEAT RECLAIM CONTROLS

All heat reclaim controls, shown on the typical schematic, are used to prevent the packaged chiller from tripping out on high pressure during periods of heat reclaim, to provide higher condensing temperatures during these periods, and to insure a minimum of rejected heat for reclamation during those periods of light cooling load. It is the responsibility of the engineer and contractor of a particular job, to provide controls necessary for the operation and safety of the heat reclaim and chilled water systems external to the packaged chiller.

13PS - **Head Pressure Control**
This control senses discharge pressure, and has three steps of control and is automatically reset:

1. When the first step of rise in pressure is reached, timed relay (11TR) will be activated and power will be available to the low slide valve block relay (6CR) through the low limit relay (7CR).

2. Rise in pressure to close the second stage will prevent the compressor from loading further.

3. If the pressure should rise closing the third step, the control of the unload solenoid (2SOL) by the temperature load controller(TLC) will be bypassed causing the compressor to unload.

11TR - **Heat Reclaim Transition Timer**
When this control is activated the instantaneous contacts open the circuit to the load solenoid (1SOL) preventing it from loading, and closes a circuit to the unload solenoid (2SOL) bypassing the temperature load controller (TLC) causing the system to unload. The timed contact, which is delayed for three minutes, activates the heat reclaim relay (11CR).

11CR - **Heat Reclaim Relay**
Energization of this relay will close a circuit to the load solenoid (1SOL) and open a circuit to the unload solenoid (2SOL), putting them under the influence of the temperature load controller (TLC).

3RS & 4RS - **Low Limit Reed Switches**
These are proximity switches located on the slide valve indicator and are activated by a moving magnet. They are set to prevent the compressor from unloading below 25% of its slide valve position through the low limit control relay (7CR).

7CR - **Low Limit Control Relay**
This relay is activated by the reed switches (3RS & 4RS) and through its action controls the low slide valve block relay (6CR).

6CR - **Low Slide Valve Block Relay**
When the compressor has unloaded to the point at which the reed switches are set, approximately 25% of slide valve position, this control relay will be activated. It will open circuits to the unload solenoid (2SOL) and fast unload solenoid (6SOL) preventing the unit from unloading further. In addition, a circuit is closed to the hot gas solenoid (3SOL).

3SOL - **Hot Gas Solenoid**
When activated this solenoid will allow discharge gas to be bypassed to the inlet side of the chiller.

2PS - **Low Suction Pressure Switch**
Sensing low pressure this switch will cause the compressor to unload through the fast unload solenoid (6SOL) on flooded units and through control relay (12CR) on direct expansion units.

12CR - **Low Suction Pressure Unload Relay Direct Expansion Units**
This relay when activated opens a circuit to the load solenoid (1SOL) and closes a circuit to the unload solenoid (2SOL) bypassing the temperature load controller (TLC).

16TAS - **High Entering Chilled Water Safety Flooded Units**
Senses the chilled water temperature and if it rises to the preset temperature will cause the compressor to unload through the fast unload solenoid (6SOL).

6. HEAT RECLAIM OPTION

1RS & 2RS - **High Limit Reed Switches**
These proximity switches are located on the slide valve indicator and are activated by a magnetic field. They are set to prevent the compressor from loading above a set point.

8CR - **High Limit Control Relay**
This relay is activated by reed switches (1RS & 2RS) and through its action controls the high slide valve block relay (5CR).

5CR - **High Slide Valve Block Relay**
When the compressor has loaded to the point where the reed switches are set, this control relay will be activated. It will open a circuit to the load solenoid preventing it from loading further.

7. TYPICAL START-UP OF PACKAGED CHILLER

Assume that the following conditions are met:

- Water is flowing through the chiller.
- All safety controls are made.
- Power has been furnished to the unit for twenty-four hours and the oil is at the proper temperature.
- Cooling load is available.

The control switch, 1SS, is made and the following action takes place.

1. Power on light (1LT) illuminates the master control relay (1CR) is energized and its contacts close.

2. Through the operation of 1CR the oil pump starter (1M) is energized and the oil pump shut-down relay (3TR) begins timing for 60 seconds before opening its contacts.

3. If insufficient pressure differential is sensed by the compressor oil pressure differential switch (3PS), the oil pressure failure time delay relay (2TR) and oil pump time delay relay (3TR) will simultaneously start to time. (2TR) will time open after 20 seconds and (3TR) will time open after 60 seconds. This action will de-energize the transfer relay (2CR). Its contacts will open and de-energize the oil pump, preventing the machine from starting. If the unit is operating this action will shut the unit off.
4. When the start-up time delay (4TR) has completed its timing function, it will energize the compressor control relay (3CR).

- **Direct Expansion Units** - Starting sequence is as indicated in steps 1 thru 4 above plus:

5. Control Relay (3CR) completes a circuit to the compressor starter, the elapsed time indicator (6TR) and furnishes power through the transformer (2T) to the temperature load controller (TLC). It also furnishes control power to the pumpdown switch (2PS). It also opens a circuit to the fast unload solenoid (6SOL).
6. When the compressor has pumped down the low pressure switch (2PS) will close, furnishing power to the lock in relay (4CR), and the expansion valve solenoid (4SOL). The expansion valve will begin to feed the unit and the unit will now be under the influence of the temperature load controller (TLC).

- **Flooded Units** - Starting sequence is as indicated in steps 1 thru 4 above plus:

5. Control relay (3CR) completes the circuit to the compressor motor starter, the elapsed time indicator (6TR), and furnishes power through the transformer (2T) to the temperature load controller (TLC). The expansion valves (4SOL & 5SOL), liquid injection solenoid (8SOL), seal oil cooler solenoid (13SOL), and seal oil thermostat are also energized. 3CR also opens a circuit to the fast unload solenoid. The compressor will now be under the control of the temperature load controller (TLC).

- **Heat Reclaim Units** - Starting sequence is as indicated in steps 1 thru 4 above plus:

5. Control relay (3CR) completes a circuit to the compressor starter control circuit, expansion valves (4SOL & 5SOL), seal oil cooler solenoid (13SOL), liquid injection solenoid (8SOL) seal oil thermostat bypass timer (12TR), elapsed time meter (6TR), and furnishes power through the transformer (2T) to the temperature load controller (TLC). It also opens a circuit to the fast unload solenoid (6SOL). The unit is now operating directly under the temperature load controller (TLC).

STARTER CONNECTIONS

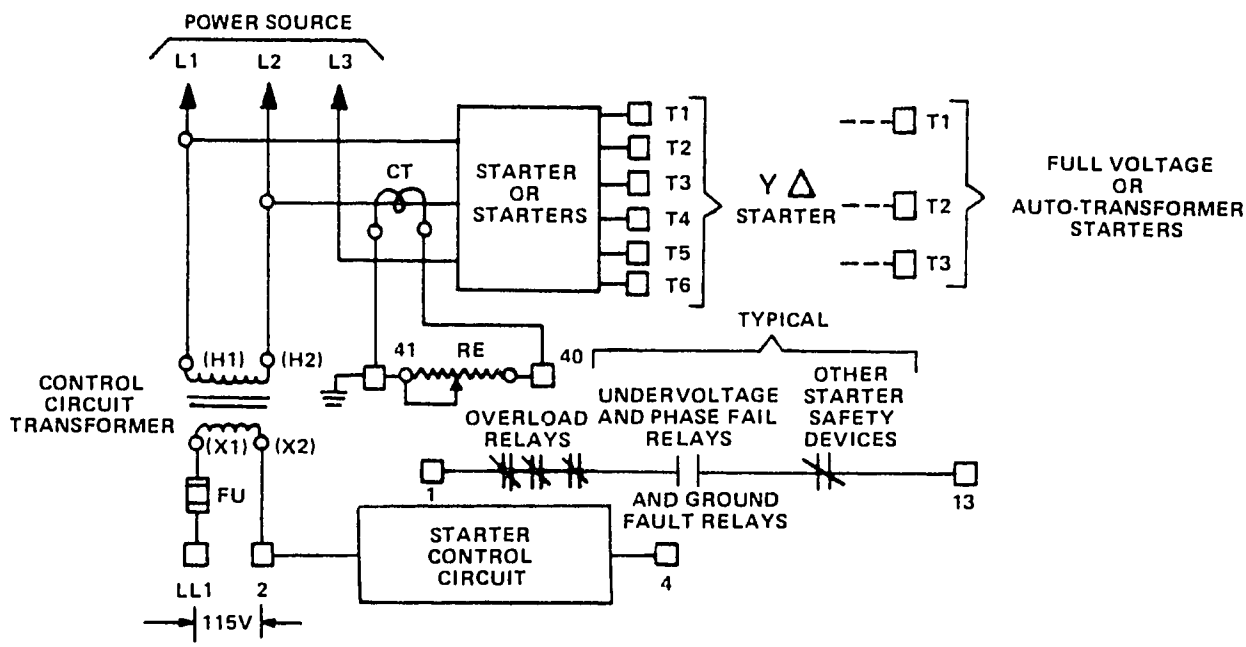

NOTES:

1. Control transformer is optional. X2 is to be grounded only when transformer is furnished.
2. Starter must be under direct control of terminals 2 & 4. No device either manual or automatic shall be used which will stop or start the compressor motor independently of the signal applied to terminals 2 & 4. Any such necessary devices shall be connected between terminals 1 & 13 as shown under "typical" above and shall be manual reset.
3. Field wiring terminals must be numbered as shown and must be directly connected to like numbered terminals in PCX/DBX control panel.

G. TYPICAL ELECTRICAL SCHEMATICS

TYPICAL HERMETIC - FLOODED CHILLER

These diagrams are typical only. Consult the diagram accompanying the unit for control settings and wiring logic.

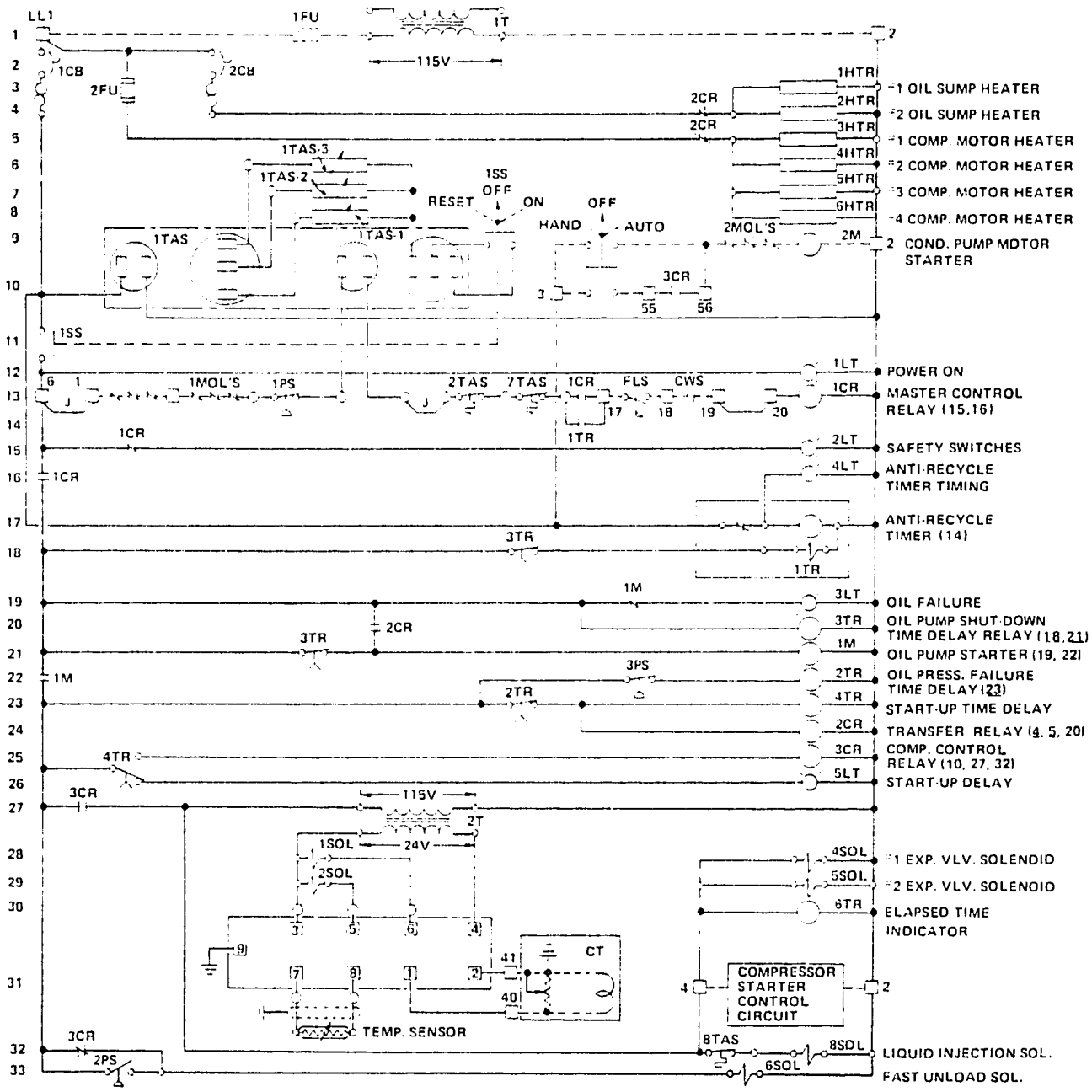

G. TYPICAL ELECTRICAL SCHEMATICS CONTINUED

TYPICAL HERMETIC - DIRECT EXPANSION CHILLER

These diagrams are typical only. Consult the diagram accompanying the unit for control settings and wiring logic.

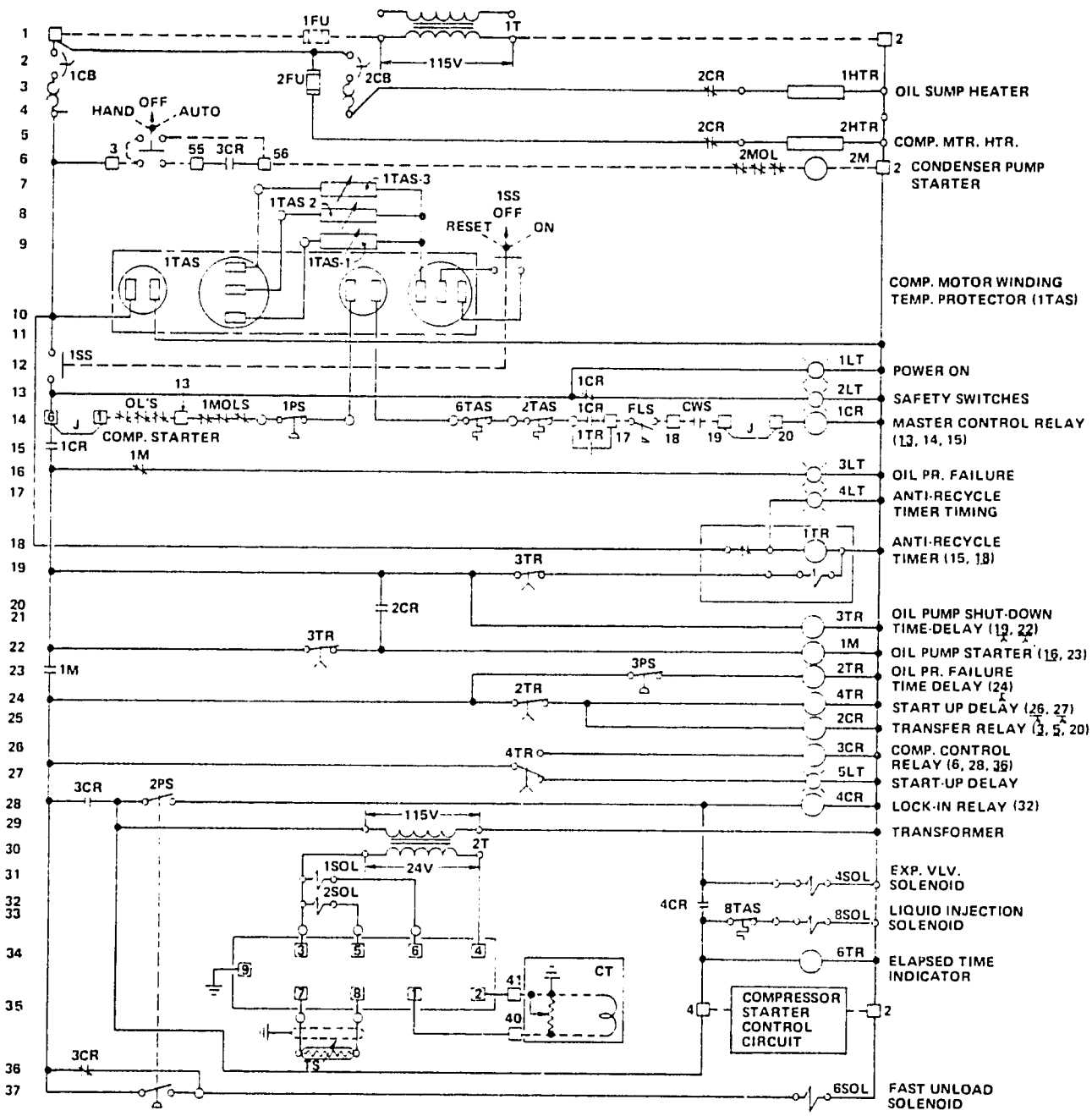

TYPICAL DIRECT DRIVE DIRECT EXPANSION CHILLER

These diagrams are typical only. Consult the diagram accompanying the unit for control settings and wiring logic.

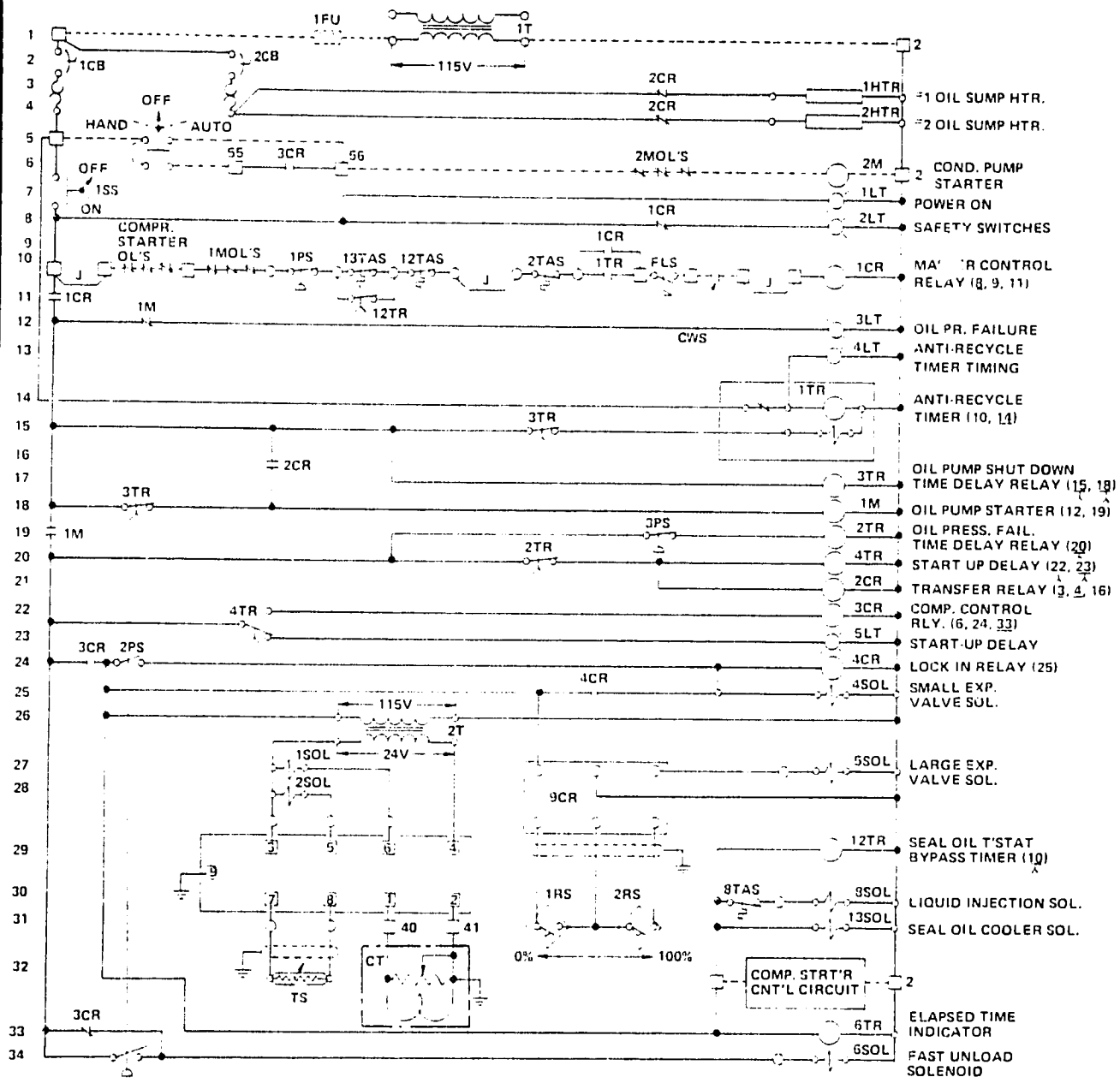

TYPICAL DIRECT DRIVE - FLOODED CHILLER

These diagrams are typical only. Consult the diagram accompanying the unit for control settings and wiring logic.

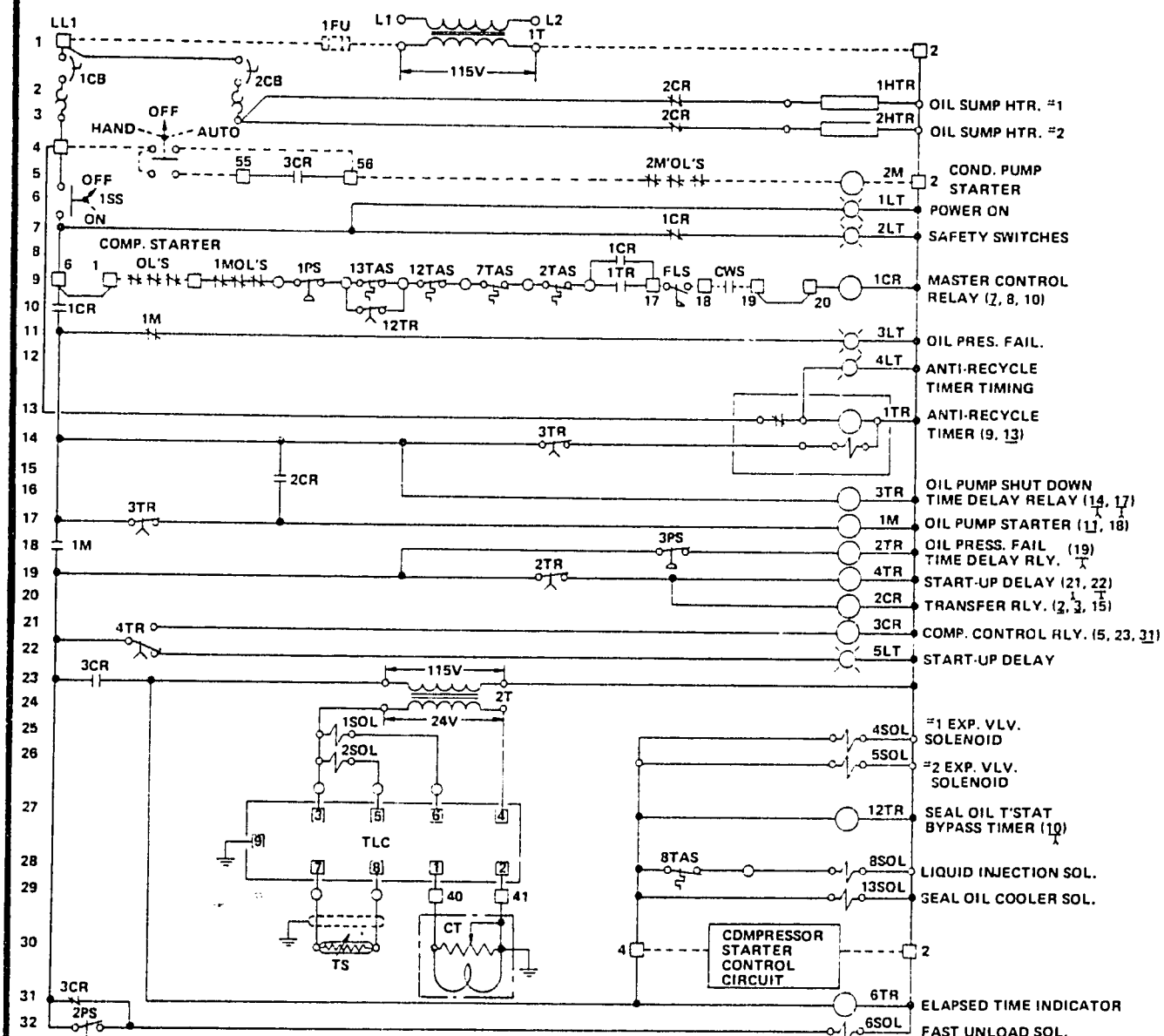

G. TYPICAL ELECTRICAL SCHEMATICS CONTINUED

TYPICAL DIRECT DRIVE - HEAT RECLAIM WITH DIRECT EXPANSION CHILLER

These diagrams are typical only. Consult the diagram accompanying the unit for control settings and wiring logic.

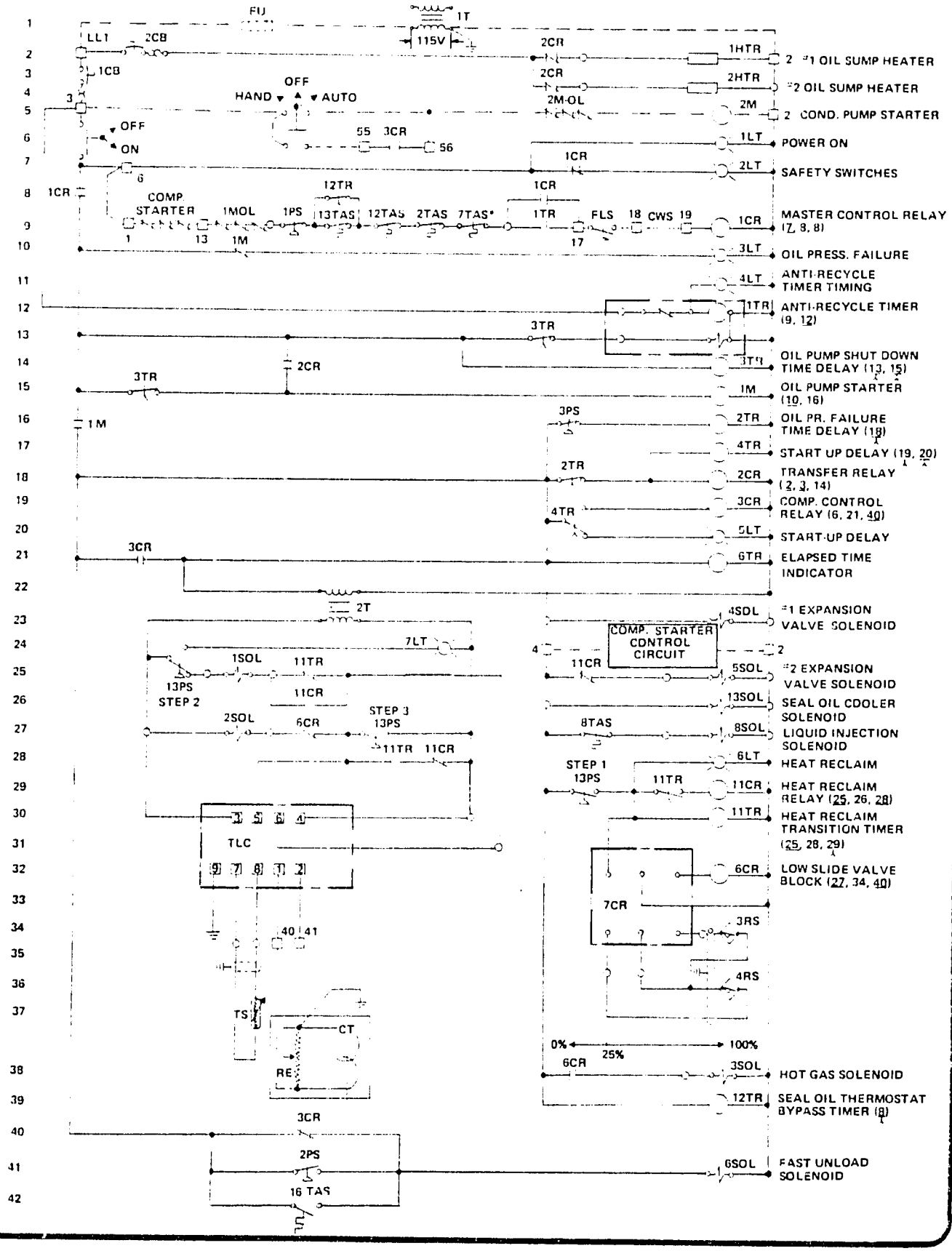

G. TYPICAL ELECTRICAL SCHEMATICS CONTINUED

TYPICAL DIRECT DRIVE - HEAT RECLAIM WITH FLOODED CHILLER

These diagrams are typical only. Consult the diagram accompanying the unit for control settings and wiring logic.

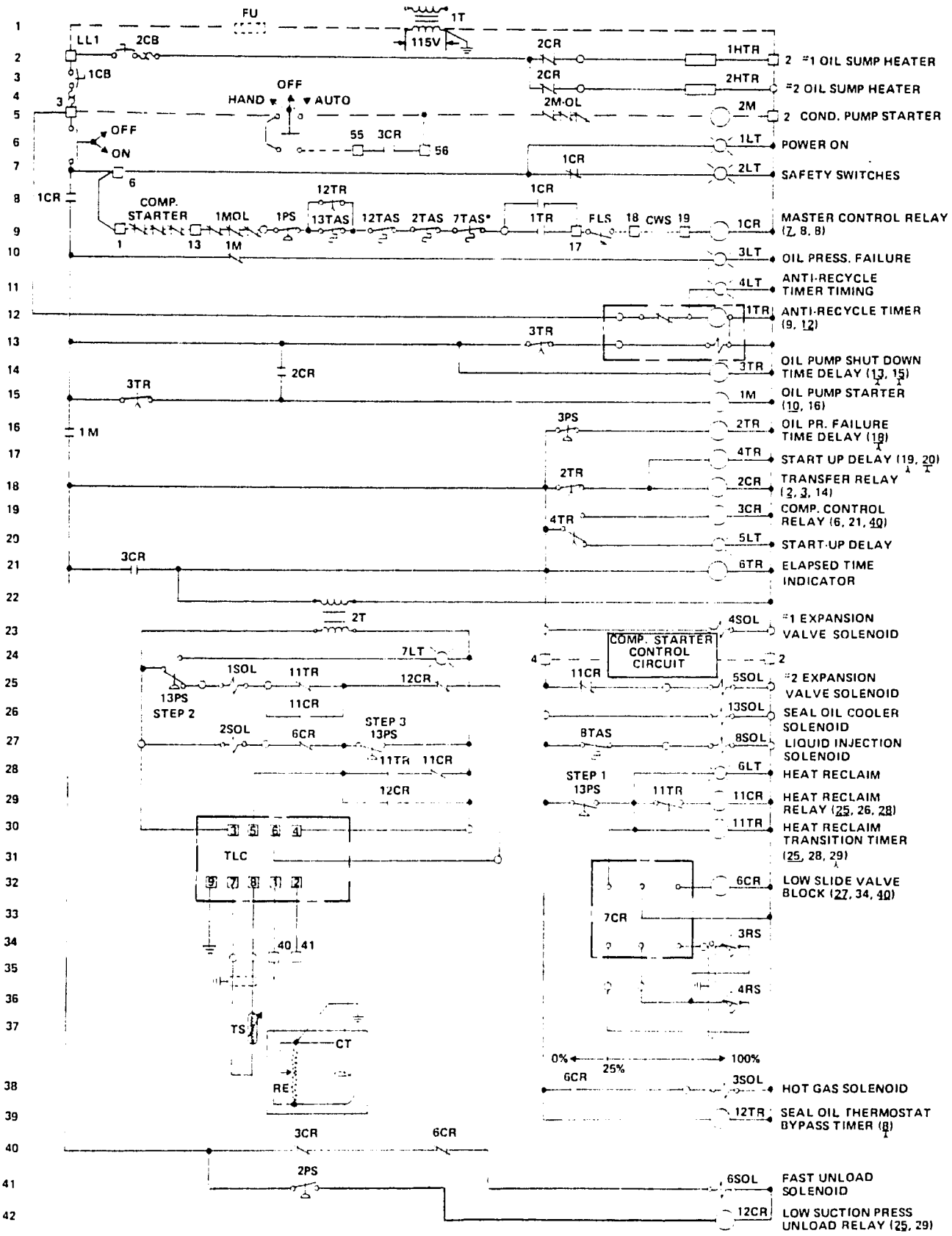

IV. MAINTENANCE

A. GENERAL

Maintenance personnel should become thoroughly familiar with the unit and the contents of this manual in order to properly diagnose and rapidly correct and prevent minor difficulties. Routine or periodic maintenance should be followed to insure a comprehensive preventative maintenance program minimizing costly repairs. National Service Bulletins as referenced in this section, may be obtained from Dunham-Bush, West Hartford, Connecticut, 06110, National Service Department.

CAUTION: All valve caps, packing glands and pipe plugs must be tightened securely after performing maintenance and/or periodically, to prevent refrigerant leakage.

WARNING: All inspection, maintenance, or repairs should be done by an authorized, qualified, Dunham-Bush, Inc., Service Representative as listed in the latest edition of Form No. 9822. Failure to comply may jeopardize the warranty.

B. PERIODIC MAINTENANCE

1. PRE-INITIAL START-UP MAINTENANCE

a. Insure unit is level.

b. Check for any piping stresses on unit.

c. Check coupling alignment. (Direct drive compressor and oil pump motors)

d. Tighten all wiring connections.

e. Check tripping of safety controls for grounding. (See Typical System Tests Section)

f. Check compressor housing heaters and oil sump heaters for proper operation.

g. Check all control and starter wiring connections for grounding.

h. Sump oil level must be visible in sump sight glass, sump oil temperature must be at a minimum of 100°F (37.8°C).

j. Hydronic system must be vented free from entrapped air, and the piping properly supported to the unit.

k. All satellite equipment and associated control devices must be operationally checked and capable of handling their design capacities.

m. Inspect for external refrigerant leaks with an electronic leak tester or halide torch.

n. Perform "insulation resistance test" and record temperature and meg ohm readings. Consult National Service Bulletin SR112 for additional information.

p. Check refrigerant indicators for evidence of moisture.

NOTE: If moisture is evident prior to initial start-up, the refrigerant indicators should be monitored after start-up to insure that the moisture is removed. If moisture is evident after minimal running time, the unit must be shut-down and the filter drier elements replaced. (See Component Maintenance Section)

r. Adjust limit switches.

2. POST INITIAL START-UP AND DAILY MAINTENANCE

NOTE: A log of daily readings should be maintained. (Refer to Maintenance Records Section)

a. Check suction superheat conditions after start-up for proper adjustment at thermal expansion valve. (Refer to Component Maintenance Section)

b. Inspect sight glasses for the following:

- Liquid Line, Inlet Side of Pilot Valve - Inspect for a full glass free from bubbles.
- Condenser Sight Glass (if equipped) - Inspect level to be visible.
- Liquid Injection Line Sight Glass (if equipped - Sight glass (downstream of solenoid) will be nearly empty if liquid injection solenoid is off. Sight glass will be full of liquid refrigerant, (if located upstream of TX valve) or flashing refrigerant (if located downstream of TX valve).

c. Check and record the following:

- Suction, discharge and oil pressures.
- Condenser inlet and outlet water temperatures.
- Chiller inlet and outlet cooling medium temperatures.
- Compressor motor amps.
- Oil Temperature.
- Compressor motor voltage.
- Discharge Temperature

d. Initial seal drainage collection (direct drive compressor) can be 0.31 cubic inches per hour (5 cc per hour) after start-up. After the unit has run a seven day break-in period, the normal seal drainage is 0.06 to 0.24 cubic inches per hour (1 cc to 4 cc per hour).

e. Check evaporator oil return (if equipped) to be at liquid level. (Refer to Component Maintenance Section)

f. Rotate capacity control hot gas bypass (optional) throttling valve to proper adjustment after initial start-up.(Refer to Sub-System Maintenance Section)

g. Check refrigerant indicators for evidence of moisture. Change filter drier elements if required. (Refer to Component Maintenance Section)

3. 1000 HR. (MONTHLY) INTERVAL MAINTENANCE

NOTE: A log of 1,000 hour readings should be maintained, and the data compared to daily values for evidence of operational changes, i.e. condensing pressure, superheat temperatures, compressor/oil pump motor current amps, etc. (refer to maintenance records).

3. 1,000 HR. INTERVAL MAINTENANCE - CONT.

a. Check oil sump sight glass to be at proper level.

b. Check oil filter pressure drop and replace filter elements if necessary. A clean filter will have 1 to 2 psid (6.9 to 13.8 kPa). The oil filter should be changed at 6 psid (41.4 kPa) pressure drop across the filter.

c. Check gages and controls for proper operation and calibration.

d. For other than water chiller applications, field test chiller cooling medium for proper freeze point. (Brine applications, check pH)

e. Inspect all motor starter control relay contacts for arcing and replace if required. Check thermal switch heaters and starter linkages for proper operation.

f. Check compressor and oil sump heaters for proper operation.

g. Check and record the following additional items:

- Oil temperature at manifold
- Oil pump motor current
- Oil pump motor voltage
- Suction superheat
- Discharge superheat
- Chiller and condenser pressure drop

h. Check filter drier pressure drop (Maximum operational pressure drop across filter is 5 psid (34.5 kPa)

j. Check unloaders for proper loading and unloading speed. For a full stroke a maximum of two (2) minutes should elapse.

k. Check all sub-systems for proper operation, i.e. seal oil cooler, evaporator oil return, vapor injection, liquid injection, water cooled oil cooler. (Refer to Oil Cooling System Maintenance Section and Sub-System Maintenance Section)

m. Check condenser water regulating valve(s) for proper adjustment.

4. 3,000 HOUR INTERVAL MAINTENANCE

a. Check coupling alignment (direct drive compressors, oil pump).

b. Field test oil for acidity. Take action if required. Low temperature and heat reclaim require professional analysis at 3,000 interval. Refer to National Service Bulletin SR96.

NOTE: PH factor and total acid number (TAN) are highly responsive to moisture.

c. Perform "insulation resistance test" (Hermetic compressor, oil pump motors) and record meg ohm and temperature readings (refer to test procedures).

5. ANNUAL MAINTENANCE

a. Send sample of oil to laboratory for thorough analysis. Records of the analyses will provide a continuous case history, and insight, as to what system components have contributed to the quality of the oil. Refer to National Service Bulletin SR96 for analyses information. Change oil if required.

b. Send sample of chiller medium and condenser water to laboratory for analysis. This will provide insight as to what maintenance may be performed to prevent corrosive chemical activities. (See component maintenance)

c. Send sample of refrigerant to manufacturer for professional analysis of contamination. Water content should not exceed 20 PPM.

d. Check, recalibrate operating and safety controls. Design settings are noted on the particular job wiring diagram. (See system tests)

e. Inspect and clean all satellite equipment per manufacturer's recommendations.

f. Check compressor seal for refrigerant and excessive oil leakage. If a maintenance action is necessary, refer to the latest edition of the DBX Compressor Manual 6136. If necessary, an update to the latest seal design is recommended.

g. Check compressor thrust bearings by loosening coupling center and checking male rotor for axial float. If axial float exists, refer to Compressor Service Manual 6136 for thrust bearing service/replacement.

h. Insure compressor coupling is aligned.

j. Lubricate compressor motor (direct drive) per manufacturer's recommendations.

k. Perform "insulation resistance test" (Hermetic compressor/oil pump motors)

m. Remove condenser heads, and have tubes inspected for corrosion by a professional agency. Clean condenser and heat exchanger(s) as outlined in this manual. Failure to comply may result in system problems. Plug or replace tubes if required.

n. Check, re-adjust oil pump end clearance. Align oil pump motor coupling (direct drive oil pump).

6. 25,000 HOUR MAINTENANCE

a. Perform annual maintenance.

b. Replace compressor shaft seal with latest version.

c. Inspect/replace compressor unloader, injection tube, and slipper seal parts if abnormal operation exists.

d. Inspect/replace compressor unloader guide block if wear is evident. Check slide valve guide and spindle snap rings for security.

e. Check compressor balance piston/sleeve clearance. Replace if beyond limits or if there has been any changes in unit oil pressure.

f. Check rotors for radial and lateral movement. If movement is beyond pre-selected limits, take appropriate action or consult National Service.

g. Hermetic Motor

- Meg motor and compare with previous readings.
- Replace motor terminal bushings with latest design bushings if not previously updated. Re-meg motor after reassembly and record.

7. 50,000 HOUR MAINTENANCE

a. Repeat 25,000 hour maintenance.

b. Replace thrust bearing.

c. Hermetic motor inspection.

- Meg motor and compare with previous readings.

B. PERIODIC MAINTENANCE CONTINUED

- Have motor service engineer inspect motor. If any significant deterioration of epoxy, lashings, or insulation exists, arrange to have motor repaired by approved motor service company. Remeg motor after reassembly and record.

- Inspect hermetic motor bearings and thrust washers for abnormal wear.

8. 75,000 HOUR MAINTENANCE

A major disassembly and inspection of the compressor is to be made. The compressor condition will determine if it should be field rebuilt or scheduled for a factory exchange rebuild.

9. SEASONAL SHUT-DOWN MAINTENANCE

a. Shut down PCX Unit in normal manner and partially pumpdown system.
b. Perform annual maintenance.
c. If unit is located where ambient temperature will be below freezing, drain all water thoroughly and blow out tubes (flooded chiller) or vessel (direct expansion chiller) with compressed air.
NOTE: Simply draining is not sufficient.
d. Open disconnect switches.
e. Run the oil pump periodically to fill the pump seal cavity with oil. This will prevent refrigerant from leaking. (Direct Drive Units)

C. MAINTENANCE RECORDS

1. LOGS

It is recommended that permanent daily records of system operating conditions be recorded at least once a day. The records should be retained as they are invaluable in determining patterns of operational change that will indicate the need for maintenance or service. System design conditions are established by the readings entered when the unit is first installed. Dunham-Bush, Inc., Form No. 9181 Log Sheet (See Appendix A), will serve this function admirably.

NOTE: In addition to the Daily/Monthly Log sheets, annual and seasonal maintenance is required. (See Periodic Maintenance Section)

The locations on the unit from which data may be obtained are shown in Figures 18 thru 22 for a typical unit.

The log sheets should be reviewed and evaluated periodically to determine operational trends.

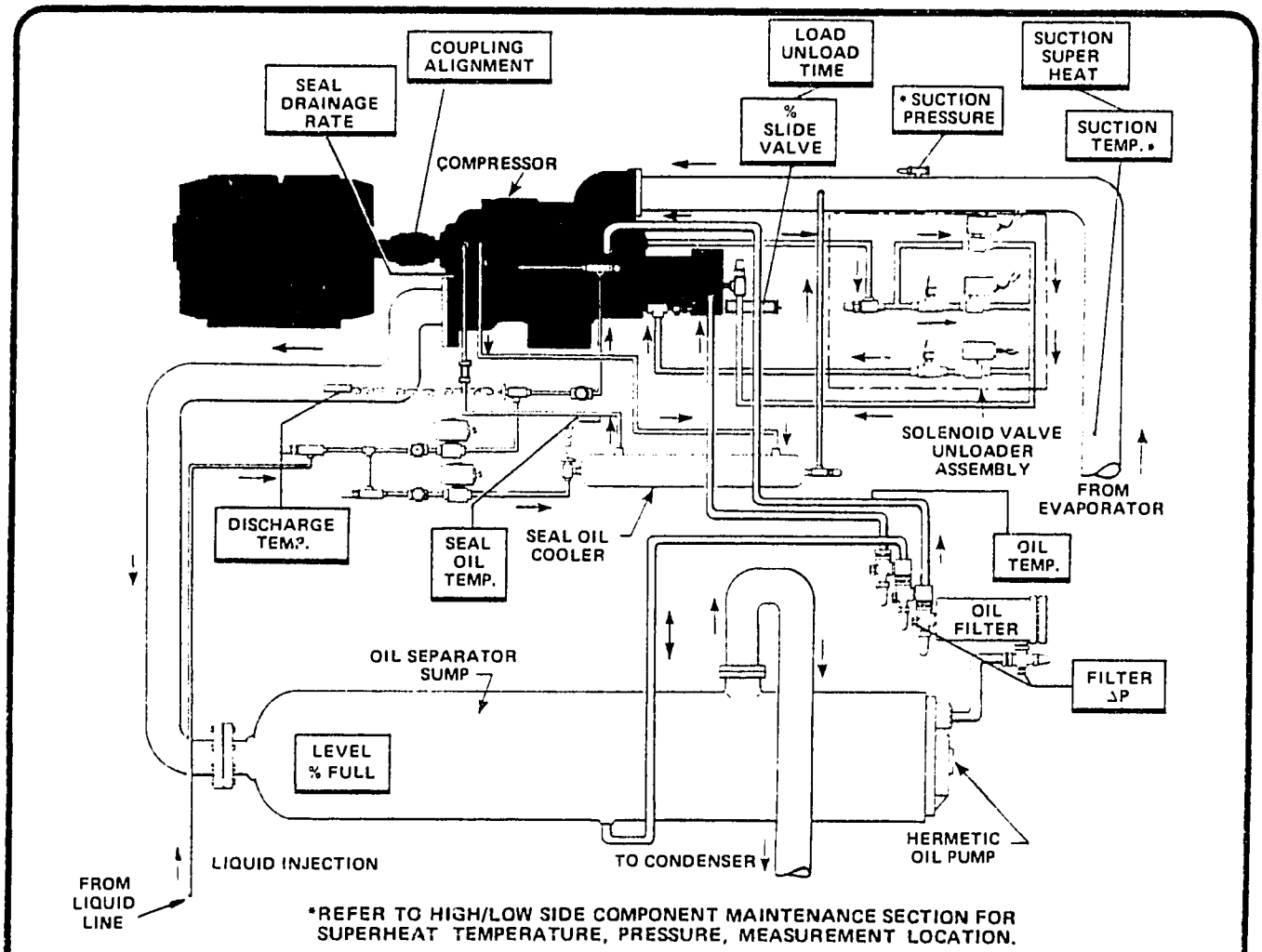

FIG. 18 TYPICAL DIRECT DRIVE COMPRESSOR WITH INTEGRAL SEPARATOR SUMP AND HERMETIC OIL PUMP

C. MAINTENANCE RECORDS CONTINUED

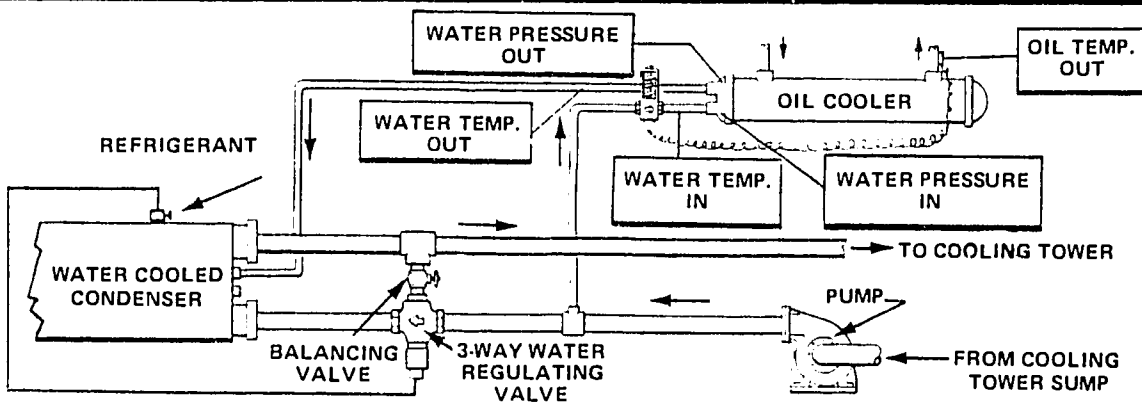

FIG. 19 TYPICAL WATER COOLED OIL COOLER (LOW TEMPERATURE APPLICATIONS)

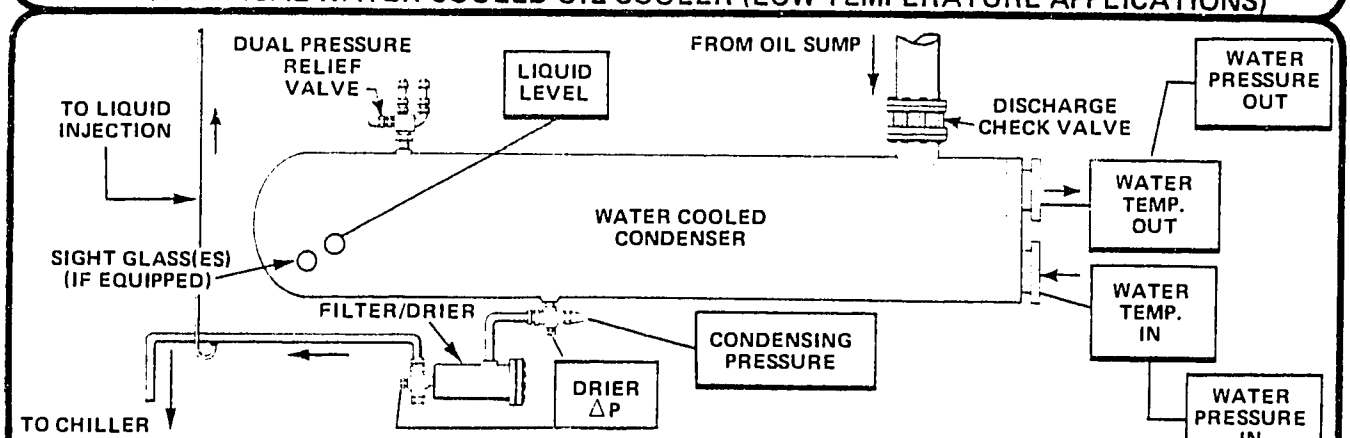

FIG. 20 TYPICAL SINGLE BUNDLE WATER COOLED CONDENSER

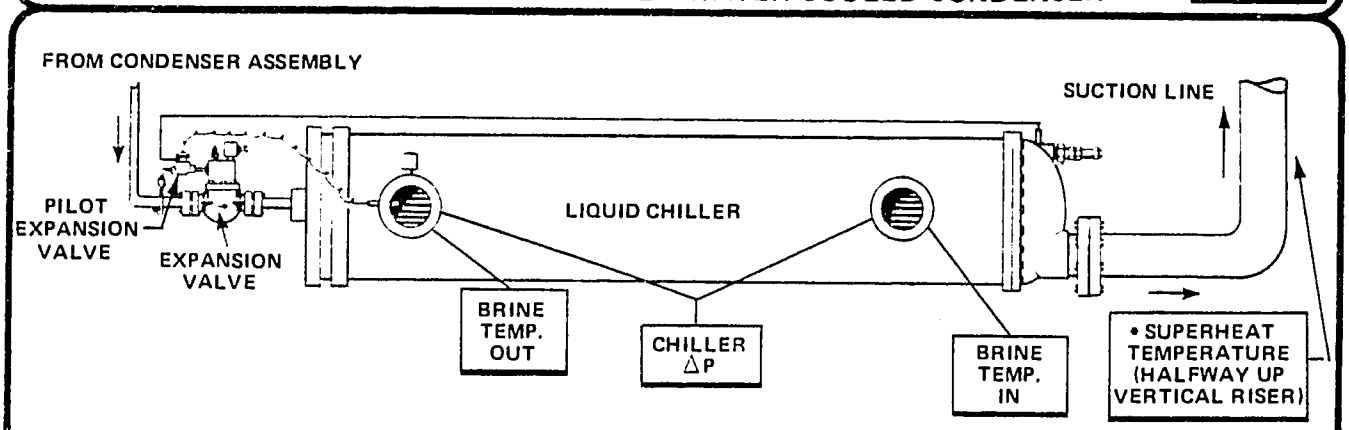

FIG. 21 TYPICAL DIRECT EXPANSION CHILLER

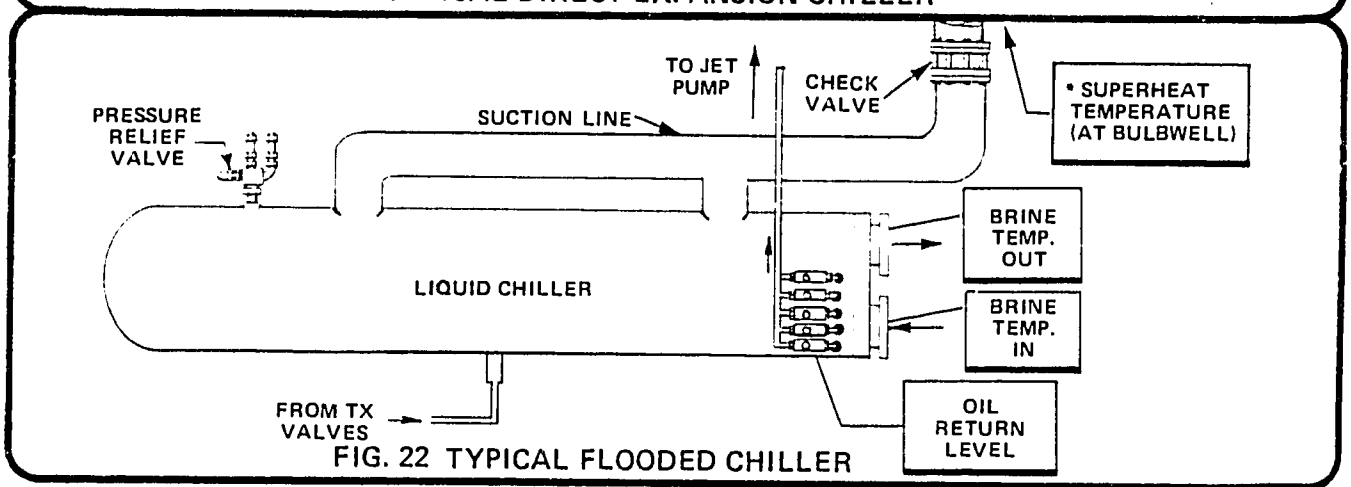

FIG. 22 TYPICAL FLOODED CHILLER

*REFER TO HIGH/LOW SIDE COMPONENT MAINTENANCE SECTION FOR SUPERHEAT TEMPERATURE, PRESSURE, MEASUREMENT LOCATION.

IV. MAINTENANCE

D. OIL REMOVAL/ADDITION

1. RECOMMENDED OILS

Dunham-Bush uses only two viscosity classifications; 150 SUS (Saybolt Universal Seconds) measured at 100°F for low temperature applications and 300 SUS measured at 100°F for high and commercial temperature applications. All other oil viscosities are not approved for use in Dunham-Bush compressors.

NOTE: Mixing of oil is not recommended. Oil should be thoroughly drained and replaced when changing oil brands. Consult factory for any other oil types.

The following Napthenic base oils are recommended.

	SST*	
	Low Temp.	Commercial or High Temp.
	(-40° F to 0°F) (-40°C to -17.8°C)	(+1°F to +50°F) (-17.2°C to +10°C)
COMPANY †	150 SUS (31.8 Cst)	300 SUS (64.6 Cst)
Sun Oil Company	Suniso 3GS	Suniso 4GS
Texaco	Capella B	Capella D

*Saturated Suction Temperature

†These oils are subject to periodic change. Consult the latest edition of National Service Bulletin SR42.

2. APPROXIMATE OIL CHARGES FOR STANDARD PACKAGES

NOTE: Packages with non-standard vessel selections may have different oil charges. The oil capacities listed are for purchasing purposes only. Refer to Oil Replenishment Section for proper oil level.

	APPROXIMATE OIL CHARGE					
	Hermetic		Direct Drive		Direct Drive Heat Reclaim	
Model PCX -	U.S. Gallons	Liters	U.S. Gallons	Liters	U.S. Gallons	Liters
120	26	98.4	21	79.5	24	90.8
150	26	98.4	21	79.5	24	90.8
180	26	98.4	21	79.5	24	90.8
230	27	102.2	24	90.8	28	106.0
290	27	102.2	24	90.8	28	106.0
350	27	102.2	24	90.8	28	106.0
400	30	113.6	35	132.5	-	-
450	-	-	44	166.5	-	-
500	-	-	44	166.5	-	-
580	-	-	45	170.3	-	-
630	-	-	45	170.3	-	-
700	-	-	46	174.1	-	-
750	-	-	47	177.9	-	-

3. OIL REMOVAL

NOTE: If oil from sump has been tested and evaluated to be re-usable, ensure that the container is clean and can be properly sealed to prevent entry of contaminants.

SP-1 *(Oil Removal)*

1. Attach hose between oil sump drain valve and a clean, vented, 55 gallon (200 liters) drum.

2. Drain oil slowly until oil ceases to flow. Oil will foam up.

3. Change oil filter(s) (Refer to SP-17)

4. OIL REPLENISHMENT

NOTE: It is desirable to coordinate oil addition with system evacuation so that oil can be drawn in utilizing the partial vacuum. Oil should be drawn into the oil sump during the final stages of evacuation. (Refer to Evacuation/Dehydration Procedures)*(SP-7 thru SP-12)*

SP-2 *(Oil Replenishment, Partial Vacuum Method)*

1. Connect a service hose to the oil sump drain valve and to a vented container of new or re-usable oil.

CAUTION: Hose should be purged with oil and care must be exercised not to incorporate air into the system.

2. Charge sump until oil level in sump is 1/3 to 1/2 of the (top) sight glass. Continue evacuation procedures.

SP-3 *(Oil Replenishment Portable Pump Method)*

CAUTION: For adding oil to a system under pressure, the portable pump should have a design working pressure of 150 to 200 PSIA, (1034.2 to 1379 kPa), and a capability to pump to 150 PSI (1034.2 kPa) from atmospheric pressure. Recommended capacity is 2 to 3 GPM (76 to 114 liters/min.)

NOTE: To facilitate sight glass inspection, a flashlight may be used.

1. With unit off and oil at normal temperature (100°F to 150°F), (37.8°C to 65.6°C), inspect for proper oil level to be at 1/3 to 1/2 of the (top) sight glass; normal level will vary from 1/2 full to just visible at the bottom of the glass.

2. Connect an adequately sized portable oil pump to oil sump drain valve, add oil from vented drum and insure absolutely no air enters the system.

3. Stop pump and close shut off valve when oil level in sump reaches 1/3 to 1/2 of (top) sight glass.

4. Disconnect pump and start-up PCX unit. If oil fails to return to sump causing shutdown due to loss of oil pressure, add additional oil and restart unit.

CAUTION: Do not overcharge system. System problems could result. Added oil must be removed once oil charge is returned to sump.

5. Shut down unit and observe sight glass after unit has stabilized. Drain off excess oil slowly.

IV. MAINTENANCE

E. TRANSFERRING/EVACUATING/CHARGING REFRIG.

CAUTION: All charging/evacuating procedures must only be performed by qualified commercial and industrial refrigeration personnel.

1. CHARGING/EVACUATING STATIONS

Adequate accessibility is provided on all packaged units for charging and evacuating. Careful consideration of the refrigerant state or quality must be employed before opening the valve for charging and evacuating procedures. Access may be obtained to the high and low side through:

- Dual pressure relief valve(s)
- Service shut-off valves (King, Queen Valve)
- Charging valves

CAUTION: Valve caps must be tightened when replacing to prevent refrigerant leakage.

1a. Dual Pressure Relief Valve

Vessels equipped with dual pressure relief valves enable service personnel to obtain access to the refrigerant vapor portion of the chiller or condenser.

FIG. 23 DUAL PRESSURE RELIEF VALVE

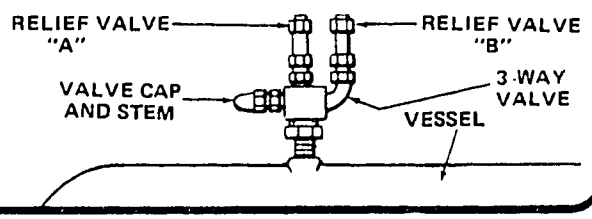

SP-4 *(Relief Valve Access)*

1. Isolate relief valve 'B' by closing off the three way valve stem clockwise until it seats. (See Figure 23)

2. Remove relief valve 'B'.

3. Install a charging hose adaptor in place of the removed relief valve.(adapter not supplied)

4. Connect one end of the hose to the adaptor insuring the hose is purged with refrigerant.

5. Return 3 way valve to original position and follow charging evacuating procedures.

1b. Service Valves

Service valves are located at the filter drier outlet (Queen Valve), and condenser outlet (King Valve) and may be used to obtain access for charging or transferring liquid refrigerant, and evacuating procedures.

SP-5 *(Service Valve Access)*

1. Backseat the valve to isolate plug tap from system.

2. Remove appropriate plug and attach hose.

3. Re-position valve stem and follow Charging/Evacuating Procedures as outlined in this manual

4. Backseat the valve and plug taps.

1c. Charging/Evacuating Valves

Units are equipped with charging valves located either on the suction line or directly on the compressor housing, as noted on the unit piping schematic.

SP-6 *(Charging Valve Access)*

1. Attach hose and purge by opening manual valve.

2 Follow Charging/Evacuating Procedures as outlined in this manual.

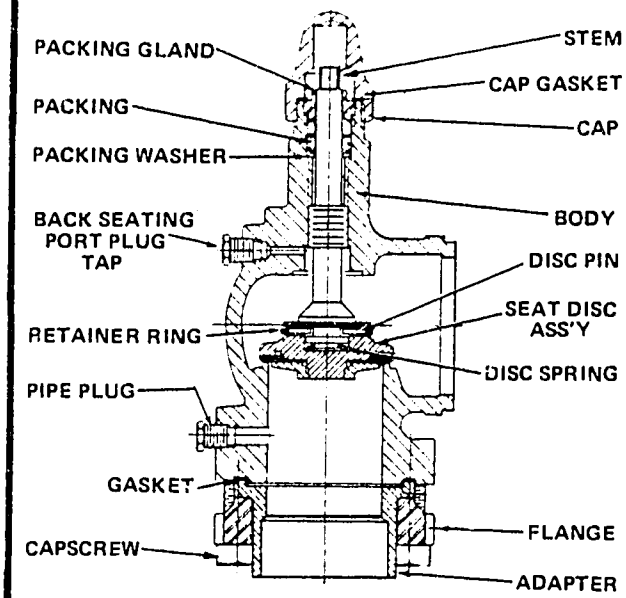

FIG. 24 TYPICAL SERVICE VALVE

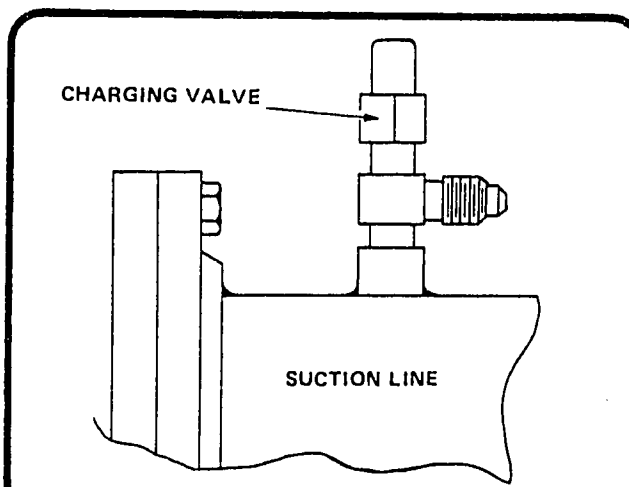

FIG. 25 TYPICAL CHARGING VALVE

2. TRANSFER (PUMPDOWN) OF REFRIGERANT TO CONDENSER OR EXTERNAL CONTAINERS

Most service work can be executed by isolating the component to be repaired, from the system. However, it may be required to pump and temporarily store the refrigerant in the condenser, or remove the charge completely. How the refrigerant is handled, is dependent upon equipment, time available, and the type of maintenance performed. The succeeding procedures SP-7 thru SP-11 must be executed in the order presented. The following must be adhered to for all transfer procedures:

CAUTION: Continuously weigh receiving container to be certain it is not filled more than 85% of its volumetric capacity to allow for thermal expansion.

NOTE: When removing refrigerant to external containers, it is recommended to pack the containers in dry ice.

2a. Partially Pumpdown System

Partially pumping down the system serves to transfer most of the refrigerant from the chiller to the condenser.

> CAUTION: Safety controls are not to be defeated or re-adjusted during pumpdown. Compressor motor starts are limited to 3 starts per hour.

SP-7 *(Partial Pumpdown)*

1. With the unit operating, and a partial load available, set the slide valve at minimum load position. Close the condenser shut-off valve (King Valve). If hot gas bypass is installed, close hot gas bypass manual valve recording number of turns.

2. After unit shuts down due to low pressure cut-out, restart unit after 20 minutes elapsed.

3. Unit will cycle off again on low pressure cut-out. The unit is now partially pumped down.

2b. Transfer Liquid Refrigerant From Chiller To Condenser or Containers (Flooded Type Chiller)

The remaining liquid refrigerant and residual oil must be transferred out of the chiller barrel before the gas is transferred.

> CAUTION: The chiller pressure must not go below the corresponding freezing point of water, or the brine being used. Approximately 65 to 75 psig (R-22) (448.2 to 517.1 kPa), should be maintained inside the vessel, until it is certain all liquid refrigerant has evaporated. Rapid removal of refrigerant will cause the chiller tubes to freeze and the possibility of bursting them exists. Rapidly boiling refrigerant also foams up the oil, which can freeze lower tubes.

NOTE: It may be helpful to monitor shell temperature beneath the chiller with a thermocouple. Another precaution (flooded chiller models) to avoid freezing is to remove the heads of the chiller and have the tubes fully blown out with compressed air, prior to refrigerant removal.

SP-8 *(Liquid Transfer, Flooded Chiller)*

1. Remove oil (refer to SP-1).

2. Connect a hose to the liquid connection at the bottom of the chiller vessel. Attach in line, a strainer, liquid refrigerant pump, and a sight glass.

3. Purge hose, and connect to the receiver (i.e. condenser, containers). Commence draining, maintaining pressure as much as possible until all the liquid is removed.

2c. Transfer Gas Refrigerant From Chiller To Condenser or Containers

SP-9 *(Gas Transfer From Chiller)*

1. Manually unseat the main expansion valve(s) and open hot gas bypass (if equipped) recording number of turns.

2. Connect the suction side of a portable condensing unit to the low (vapor) side of the system. Connect the discharge hose to the condenser vessel through the dual pressure relief valve (see SP-4) or to an external container.

3. Commence removal of the refrigerant until the suction pressure (chiller pressure) is slightly above atmospheric pressure.

2d. Transfer Liquid Refrigerant from Condenser to External Containers

SP-10 *(Transfer Liquid Refrigerant from Condenser)*

1. Connect a hose to the service valve at the condenser outlet. (See SP-5) Attach an in-line strainer, refrigerant pump and sight glass. Purge line and attach to a clean empty refrigerant container which is marked with the correct type of refrigerant.

2. Commence draining until the first cylinder is 85% full.

3. Remove container and repeat until all liquid refrigerant is removed, without dropping pressure below the corresponding freezing temperature of water.

2e. Transfer Gas Refrigerant From Condenser to External Containers.

SP-11 *(Transfer Gas Refrigerant from Condenser)*

1. Connect the suction side of a portable condensing unit through the condenser relief valve access. (See SP-4) Connect the discharge hose of the portable condensing unit to an external container.

2. Commence removal of refrigerant gas until the condenser vessel pressure is slightly above atmospheric pressure.

3. COMPLETE SYSTEM EVACUATION AND DEHYDRATION

For a complete system evacuation, it will be necessary to make up a manifold and evacuate from three evacuating stations simultaneously.

NOTE: It is absolutely necessary to use a true micron gauge. An ordinary compound gauge is not acceptable.

SP-12 *(Evacuation/Dehydration)*

1. Drain oil (refer to SP-1).

2. Transfer refrigerant to external containers (refer to SP-7 thru SP-11)

3. Pressure test the unit with dry nitrogen and R-22 to insure no leaks exist. (Refer to SP-37)

4. With the unit at atmospheric pressure, connect a vacuum pump to the system. Manually unseat the main expansion valve(s) and open hot gas bypass valve (if equipped).

5. Evacuate to 1,000 microns and break vacuum with dry nitrogen and R-22.

6. Change filter drier elements. (Refer to SP-29).

E. TRANSFERRING/EVACUATING/CHARGING REFRIG.

System Evacuation - continued

NOTE: To achieve best results, warm water or warm air should be recirculated through the water side of the evaporator and condenser.

7. System must be dehydrated down to 1,000 micron level at least three times, initially leaving vacuum pump on system at least 12 hours. Break vacuum twice with dry nitrogen. On final pull down to 1,000 microns, or lower, system pressure must not rise above 2,000 microns in four hours with vacuum pump isolated from system.

8. Fill oil sump with clean oil after third pull down utilizing the partial vacuum to draw in the oil. (Refer to SP-2)

9. Turn on oil heaters upon completion of dehydration. Break vacuum with dry refrigerant vapor.

4. CHARGING THE REFRIGERANT SYSTEM

When charging a fully evacuated system, the unit must be 1) gas charged initially, 2) liquid charged to 90% of design charge capacity and 3) charged under operation to full design charge capacity, as noted on the nameplate located at the control panel.

4a. Initial Gas Charging the Refrigerant System

NOTE: This is the initial procedure for charging a fully evacuated system, with the oil at the proper level.

> CAUTION: Refrigerant gas must be charged until the internal system pressure corresponds to an evaporating temperature above freezing (R-22, 70 PSIG) (482.6 kPa), before liquid is charged. This will prevent freeze-up and bursting of tubes.

> CAUTION: Chiller and condenser water pumps must be running and must maintain a minimum of 50% water flow.

SP-13 *(Initial Gas Charging)*

1. Manually unseat the main thermal expansion valve(s)

2. Slowly gas charge (2 PSI/minute) (13.79 kPa/min) at:
   a. Condenser vessel
   b. Chiller vessel

3. Continue gas charging until the pressure is stable throughout the system at a safe level. (R-22: 70 PSIG 482.6 kPa).

4b. Liquid Charging the Refrigerant System

NOTE. This procedure is for charging a unit that has a system pressure above the corresponding freezing temperature of water. Liquid refrigerant can be charged directly into an evacuated system only if water is drained thoroughly and the tubes (flooded chiller) or the shell (direct expansion chiller) have been fully blown out with compressed air.

> CAUTION: Chiller and condenser water pumps must be running and must maintain a minimum of 50% water flow.

SP-14 (Liquid Charging the System)

1. Purge and connect a charging hose from refrigerant containers to the King valve (refer to SP-5).

2. Liquid charge condenser, exchanging containers until 90% of design charge is in the system. A liquid refrigerant pump may be employed. Insure a liquid seal exists in the liquid line to the thermal expansion valve(s) by observing the sight glass.

3. The remaining refrigerant must be charged while the system is operating (refer to SP-15).

4c. Adding to Refrigerant Charge

This procedure is used when an inadequate charge is suspected. Typical indications of an inadequate charge are bubbles in sight glasses (vaporized refrigerant), high suction pressure, high oil temperature, etc. Indications of an adequate charge at 100% load are:

- Discharge Superheat - Must maintain between 25°F (13.9°C) and 30°F (16.7°C) above saturated conditions.
- Refrigerant Quality - Moisture indicator sight glasses should be clear of bubbles when system is fully charged.
- Condenser Outlet Temperature (Subcooling) - System will maintain approximately 8°F to 10°F (4.4°C to 5.6°C) below saturated conditions when refrigerant charge is adequate.
- Oil Temperature (Water Cooled Oil Cooler, if equipped) - Oil temperature must be maintained at 110°F to 120°F (61.1°C to 66.7°C) entering compressor.
- Liquid Injection Feed (if equipped) - Liquid seal exists in feed line at sight glass.

  NOTE: It may be helpful to liquid charge the liquid injection line independently to initiate normal operation.

- Seal Oil Cooler Feed (Direct Drive Models) - Liquid seal exists in feed line entering cooler.

  NOTE: It may be helpful to liquid charge the feed line to the seal oil cooler independently to initiate normal operation.

SP-15 *(Adding to Refrigerant Charge)*

1. Manually set and hold compressor slide valve at 25% position using temperature load control (TLC) manual control selection switch.

> CAUTION: Partial cooling load must be available to manually position slide valve to prevent shut-down from safety controls.

2. Connect container of the design refrigerant to the low side of the system.

3. Start-up PCX unit, open drum, valve and gas charge system until above conditions are met.

9411

1. COMPRESSOR/MOTOR ASSEMBLY

1a. Compressor

All inspection, maintenance, or repairs of the compressor must be done by an authorized, qualified Dunham-Bush, Inc. Service Representative as listed in the latest edition of Form Number 9822. If the customer has any reason to suspect a problem, he should contact the Dunham-Bush Service Representative for assistance. Failure to comply may jeopardize the warranty. Repair information may be found in the latest edition of the DBX Compressor Service Manual, Form No. 6136.

1b. Compressor Motor

The primary maintenance required on the hermetic compressor motor is to perform an insulation resistance test at periodic intervals. A permanent record of the megger test will serve to show any approaching motor problems. (Refer to SP-36) Direct drive motors must be lubricated per manufacturer's specifications and periodic insulation resistance tests are also recommended.

1c. Coupling Alignment

Shafts become misaligned as a result of many natural and unavoidable causes. Heat, vibration, bearing wear, the settling of foundations, etc., all tend to alter alignment. Periodic checks of the compressor coupling is recommended.

NOTE: The coupling should be hot when making alignment adjustments. Also the motor should be aligned to the compressor.

SP-16 *(Compressor Coupling Alignment)*

1. To check angular misalignment (Figure B) mount indicator (as shown on left flange) with stem on face of right flange. Rotate Equipment noting maximum and minimum indicator reading. Move equipment as necessary to reduce the total indicator reading to that shown below.

2. To check parallel misalignment (Figure C) set indicator stem on outer surface of flange. Rotate equipment noting maximum and minimum indicator reading. Move equipment as necessary to reduce indicator reading to that shown below. Be careful not to disturb the setting of Step 1.

NOTE: If it is necessary to remove the motor alignment pins, the motor should be repinned after the alignment corrections are made.

3. Repeat Steps 1 and 2 as necessary.

4. Coupling hubs to be spaced to dimension C, as shown in the table below.

5. This coupling should be rotated several revolutions to make sure no "endwise creep" in connected shafts is measured.

6. Tighten all bolts as shown in chart below.

7. When operating at full speed,both laminated rings should have a distinct and clearly defined appearance - not blurred when viewed from top and side.

1d. Motor Housing Heaters (Hermetic Units)

No maintenance is required on compressor housing heaters, except for replacement, if the heater element should fail.The heater may be removed from the housing, or well without disturbing the charge. There are two types of compressor housing heaters. The housing mounted type (heater pad) which requires a temperature resistant epoxy for installation, and a well type (insertion) which requires no other agent for assembly. All electrical service connections must be disengaged prior to installation. Refer to the unit wiring diagram.

FIG. 25 - COUPLING ALIGNMENT

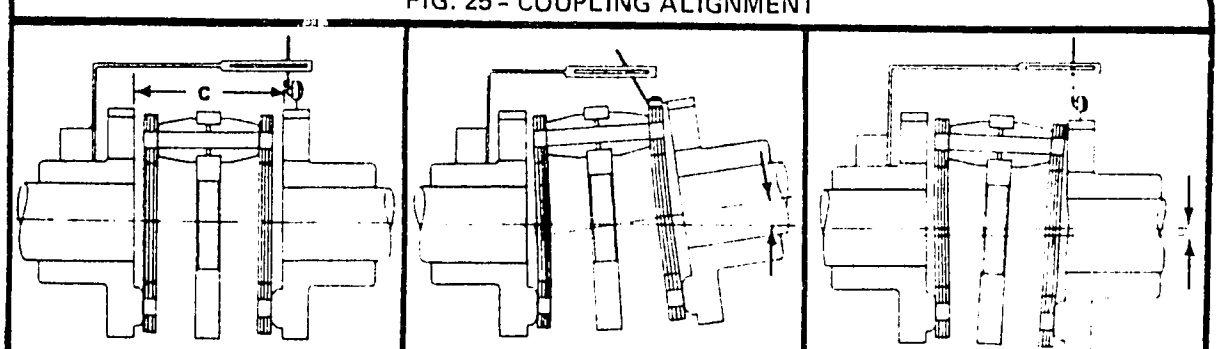

FIGURE 25A
COUPLING IN ALIGNMENT

FIGURE 25B
TEST FOR ANGULAR MISALIGNMENT

FIGURE 25C
TEST FOR PARALLEL MISALIGNMENT

THOMAS COUPLING SERIES	FORM-FLEX COUPLING SERIES	BOLT TORQUE				MISALIGNMENT (TIR)				DIMENSION C (SEE FIG. A)	
		THOMAS		FORM-FLEX		PARALLEL		ANGULAR			
		(Ft.-Lb.)	(kg-m)	(Ft.-Lb.)	(kg-m)	(In)	(mm)	(In)	(mm)	(In)	(cm)
163 DBZ-8	-	13	1.8	-	-	0.003	0.076	0.003	0.076	2 7/16	6.19
201 DBZ-8	-	25	3.5	-	-	0.005	0.127	0.005	0.127	2 15/16	7.46
226 DBZ-8	AK 30	43	6.0	40	5.5	0.005	0.127	0.005	0.127	3 13/16	9.68
263 DBZ-8	AK 35	63	8.7	40	5.5	0.007	0.178	0.007	0.178	4 3/16	11.0
301 DBZ-8	AK 40	95	13.1	80	11.1	0.007	0.178	0.007	0.178	4 7/8	12.38
351 DBZ-8	AK 45	175	24.2	80	11.1	0.007	0.178	0.007	0.178	5 7/8	14.90
350 - 51	-	95	13.1	-	-	0.007	0.178	0.007	0.178	6	15.24

1. Consult factory for complete engineering specification ASY-ES-1 , if additional information is required.
2. TIR = Total Indicator Reading.
3. Compressor alignment data is subject to periodic change. Consult latest National Service Bullentin SR-109.

2. OIL SYSTEM COMPONENT MAINTENANCE

2a. Oil Filter Replacement

The need for replacement of the oil filter may be determined by measuring the pressure drop across the filter (6 psid [41.4 kPa] maximum). The normal pressure drop with a new element is 1 to 2 psid (6.9 to 13.8 kPa). Some units are equipped with an indicator for ths purpose.

FIG. 26 HORIZONTAL TYPE OIL FILTER

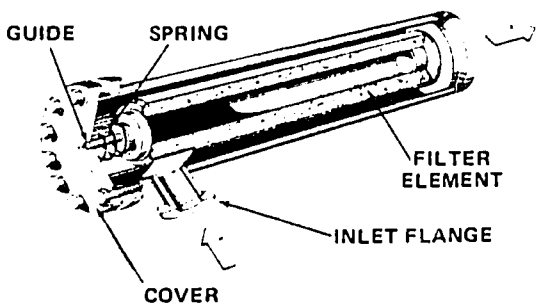

P-17 *(Oil Filter Replacement)*

1. With the unit off, close the oil filter service valves at the inlet and outlet sides of the oil filter assembly to be serviced.

2. Vent filter housing into a gallon (3.8 liters) container. Oil will foam up.

3. Remove cover (enclosure; vertical type), by evenly backing out the bolts.

NOTE: Do not cock cover (enclosure). Spring is in compression with the filter elements.

4. Remove filter element guide. Remove and inspect oil filter cartridge for metallic particles, babbitt or unusual amounts of dirt or sludge. Remove old gaskets (O-Ring).

5. Clean interior of oil filter housing with a lint free wiping cloth.

6. Inspect new oil filter element to ensure that the element is free from damage, and install new oil filter element. Ensure that the element is seated properly.

7. Install cover (enclosure) with new gasket or "O" Ring if necessary. Torque bolts evenly.

8. Purge oil filter thoroughly and open isolation shut off valves.

9. With unit operating, test for any leakage.

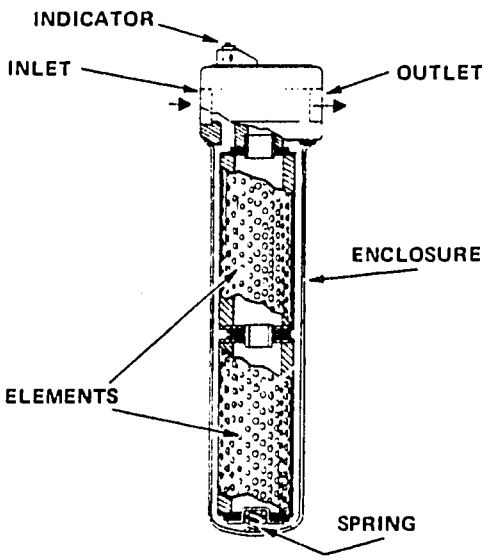

FIG. 27 VERTICAL TYPE OIL FILTER

2b. Oil Pump/Motor Assembly

The oil pump, whether direct drive or hermetically sealed are designed for long trouble free life, with a minimum of maintenance.

Hermetic pump applications require oil sump draining to obtain access to the pump assembly. External pumps may be serviced in-line. Anticipated maintenance for the pump assembly are:

- End Clearance Adjustment
- Motor coupling alignment (direct drive oil pump)
- Oil pump suction strainer cleaning

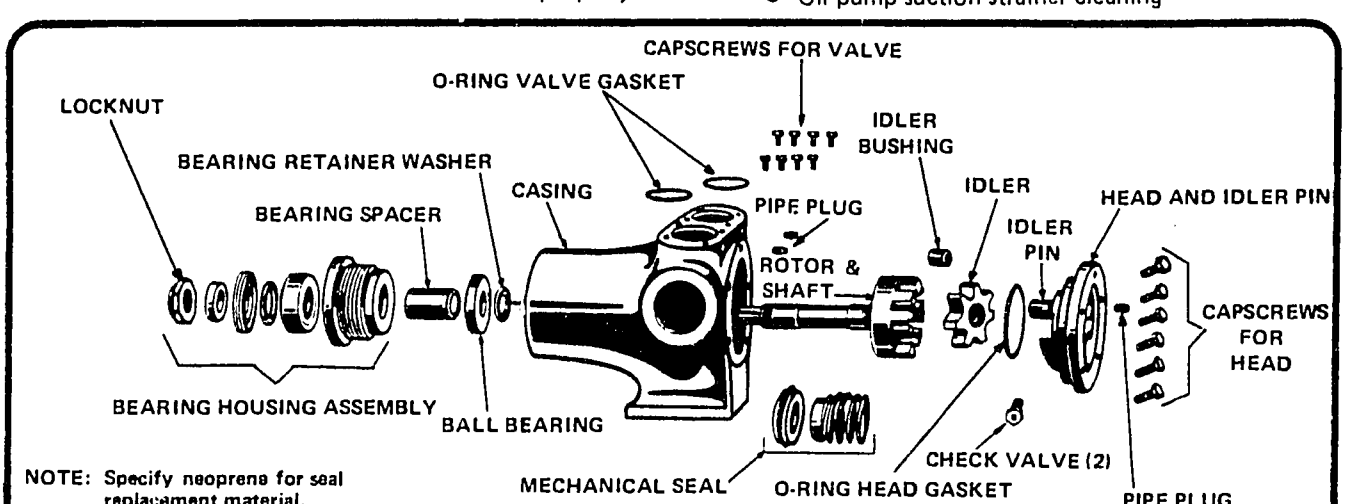

NOTE: Specify neoprene for seal replacement material.

FIG. 28 TYPICAL EXTERNAL TYPE OIL PUMP

F. COMPONENT MAINTENANCE CONTINUED

SP-18 *(Coupling Alignment, Direct Drive Oil Pump)*

1. Disconnect electrical service

2. Check parallel alignment by placing a straight-edge across the two coupling flanges and measuring the maximum offset at various points around the periphery of the coupling. Do not rotate the coupling. If the maximum offset exceeds the figure shown under parallel, realign the coupling.

3. Check angular alignment with a micrometer or caliper. Measure from the outside of one flange to the outside of the other at intervals around the periphery of the coupling. Determine the maximum and minimum dimensions. Do not rotate the coupling, the difference between the maximum and minimum must not exceed the figure given under "angular". If a correction is necessary, be sure to recheck the parallel alignment.

NOTE: For maximum life, keep misalignment values as near to zero as possible.

NET MAX. ALIGNMENT VALUES (EXTERNAL OIL PUMP)				
(Type N) Sleeve Size	Parallel		Angular	
	In.	cm	In.	cm
6	0.015	0.038	0.070	0.178
7	0.020	0.051	0.081	0.206
8	0.020	0.051	0.094	0.239
9	0.025	0.064	0.109	0.277

SP-19 *(End Clearance Adjustment, Direct Drive Oil Pump)*

1. Disconnect electrical service to oil pump.

2. Loosen set screws on bearing housing.

3. Counterclockwise rotation of the bearing housing will increase end clearance. Two notches on the bearing housing represent approximately 0.003 in. (0.076mm).

CAUTION: Be sure the shaft can be rotated freely and the set screws are tightened securely.

4. Align coupling and reconnect electrical service.

SP-20 *(Maintenance, Hermetic Oil Pump)*

1. Partially pumpdown unit. (Refer to SP-7)

2. Drain oil from oil sump housing into 55 gallon (208.2 liters) container. (Refer to SP-1)

3. Disconnect all electrical connections and properly tag.

4. Attach a calibrated pressure gauge to both high and low side to determine if the check valve has properly seated.

5. With sump at atmospheric pressure, remove the oil pump assembly. With sump/separator assemblies, remove separator mesh and clean with R-11. Inspect for damage and wear. Replace if required.

6. Remove motor rotor, inspect rotor and stator for wear marks. Inspect bearings for wear. If any wearing is evident, repair/replace pump assembly.

7. If original pump assembly is to be replaced, check rotor end clearance and insure clearance is to 0.002 to 0.003 in. (0.051 to 0.076 mm).

8. Assemble new or cleaned oil pump strainer to pump assembly using the existing connector tube assembly and attaching hardware, install pump assembly and O-ring using lifting eye bolt. Care should be taken to prevent damaging pump strainer. Use of two guide pins to support pump on its flange will aid in assembly.

9. Reconnect piping and electrical connections. Fill oil sump (refer to SP-2 and SP-3).

FIG. 29 TYPICAL HERMETIC TYPE OIL PUMP

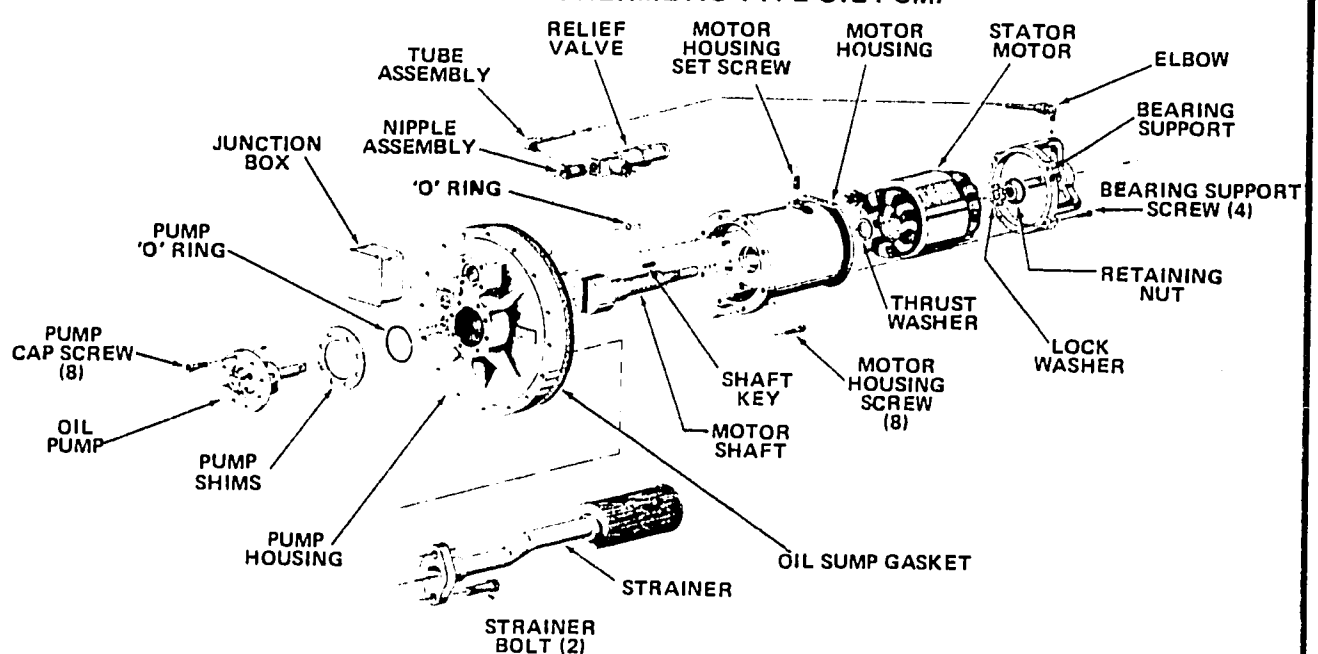

F. COMPONENT MAINTENANCE CONTINUED

2c. Oil Pressure Relief Valve

CAUTION: Problems seeming to require oil pressure relief valve adjustments can usually be traced to other items, such as plugged oil filters, worn pump, improper pump end clearance, a plugged or dirty seat, and/or a damaged seat.

- **Hermetic Type** - The hermetic type oil pressure relief valve is factory pre-set to crack open at 54 PSIG (372.3 kPa) pressure at the compressor, 100% load .

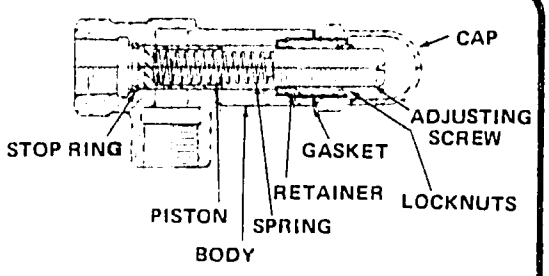

FIG. 30 TYPICAL HERMETICALLY LOCATED PRESSURE RELIEF VALVE

- **External Type** - The external type in-line oil pressure regulating valve is factory set to crack at 35 to 42 psig (241.3 to 289.6 kPa) (pressure at compressor, 100% load).

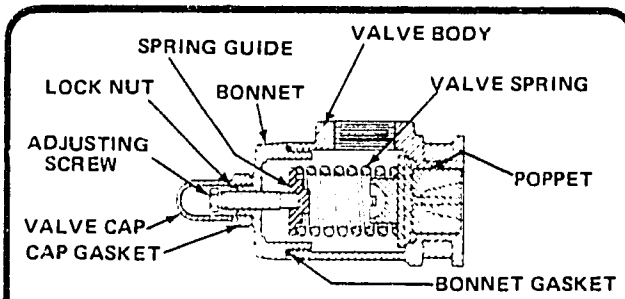

FIG. 31 TYPICAL EXTERNALLY LOCATED PRESSURE RELIEF VALVE

SP-21 *(Oil Pressure Relief Valve Adjustment)*

1. Remove the valve cap which covers the adjusting screw, and loosen the locknut(s), which locks the adjusting screw so the pressure setting will not change.

2. The adjusting screw should be turned in for increasing the pressure that the relief valve will open.

3. Adjust to design conditions.

SP-22 *(Oil Pressure Relief Valve Disassembly)*

1. Remove valve cap.

2. Measure and record length of extension of the adjusting screw.

3. Loosen the locknut(s) and back out adjusting screw until spring pressure is released.

4. Remove part components, clean and inspect for wear or damage. Repair or replace as necessary.

2d. Oil Sump Heaters

No maintenance is required on oil sump heaters, except for replacement, if the heater element should fail. The heater may be removed from its well without disturbing the oil or charge.

SP-23 *(Replacement of Oil Sump Heaters)*

1. With the power off, disconnect electrical cable and wiring.

2. Remove the oil sump heater element from the oil sump flange.

3. Install new oil sump heater element to the oil sump well.

4. Reconnect wiring and electrical cable.

2e. Evaporator Oil Return (Flooded Chiller, Low Temp. Direct Expansion Chiller)

The jet pump oil return taps on the chiller vessel are factory pre-set to design conditions. However re-adjustment may be needed after installation.

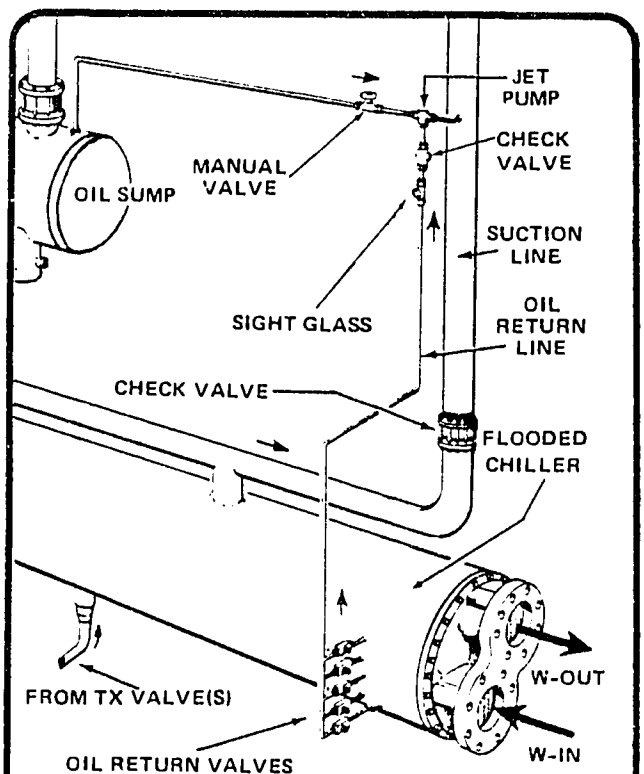

FIG. 32 TYPICAL EVAPORATOR OIL RETURN

- **Adjustment (Flooded Type)** - Once the maximum and minimum liquid refrgerant levels are established, adjustment may be made. All dip tubes that are within the liquid operating range are to remain fully open. All dip tubes that are never exposed to liquid refrigerant are to remain closed, to prevent capacity reduction. If extended pulldown is anticipated, the lowest dip tube should remain fully open.

- **Adjustment (Direct Expansion Type)** - Valve is to remain fully open on dip tube.

F. COMPONENT MAINTENANCE CONTINUED

3. OIL COOLING SYSTEM MAINTENANCE

3a. Liquid Injection Oil Cooling System

FIG. 33 TYPICAL LIQUID INJECTION OIL COOLING SCHEMATIC

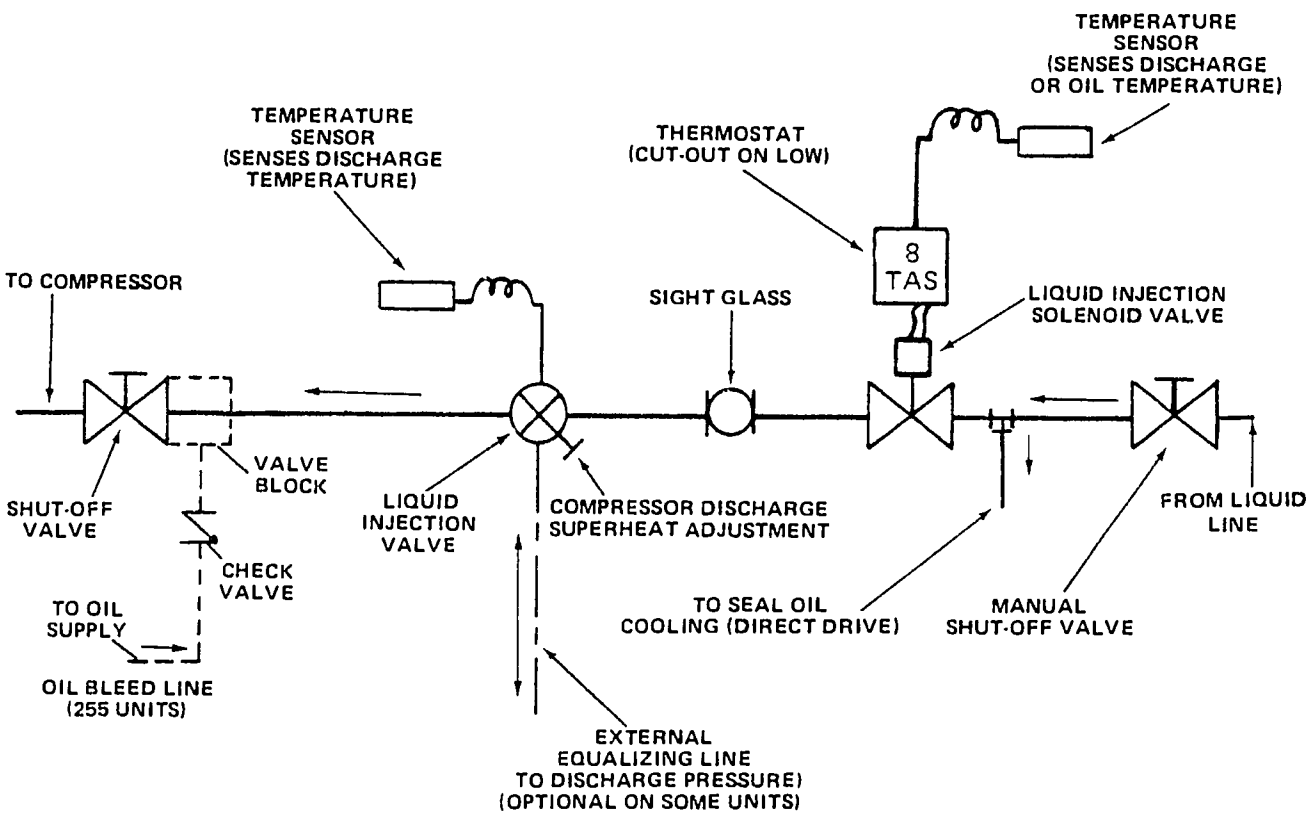

- **Normal Operation** - This system is designed to hold the oil temperature to the compressor inside the 135°F to 200°F (57°C to 93°C) range under all conditions of operation. This is done by a combination of controls. The liquid injection valve is factory adjusted to provide 40°F to 50°F (22°C to 28°C) discharge superheat at 100% load and design head pressure. That is the discharge temperature that will be controlled at 40°F to 50°F (22°C to 28°C) above saturated discharge temperature.

EXAMPLE: At 105°F (41°C) condensing temperature and 100% load, the discharge temperature will be controlled at 145°F to 155°F (63°C to 68°C) at 100% load. At 115°F (46°C) condensing temperature the discharge temperature will be controlled at 155°F to 165°F (68°C to 74°C) at 100% load.

At low loads, the superheat provided by the liquid injection valve will decline to approximately 25°F (14°C) and in the usual system the head pressure will also rebalance lower.

EXAMPLE: 10% load, 90°F (32°C) C.T. the liquid injection valve will control at 115°F (46°C). It is preferable to maintain a higher value to prevent oil dilution, so under these conditions, the thermostat will cycle the solenoid valve to maintain 140°F ± 5°F (60°C ± 3°C) oil temperature.

> **CAUTION:** The thermostat setting should not be altered in the field. If the unit is stopped by the thermostat, the cause should be determined and corrected.

- **Abnormal Operation** - If the liquid injection valve fails in the closed position the unit will cycle off on the oil temperature thermostat, or the oil pump motor thermostats (or hermetic motor inherent protector, where applicable). If the liquid injection valve fails in the open position, the thermostat and solenoid will take over control until the liquid injection valve can be repaired.

- **Settings** - Thermostat: As noted on the unit job wiring diagram. TX Valve: Adjusted to maintain 40°F to 50°F (22°C to 28°C) above saturated discharge temperature (100% load, design conditions) minimum.

NOTE: Heat transfer paste must be used in the bulbwell.

3b. Water Cooled Oil Coolers

The water cooled oil coolers require periodic cleaning of the water side to assure maximum efficiency. It is recommended that the tubes are cleaned out at the same time that the condenser is cleaned. (Refer to Condenser Maintenance)

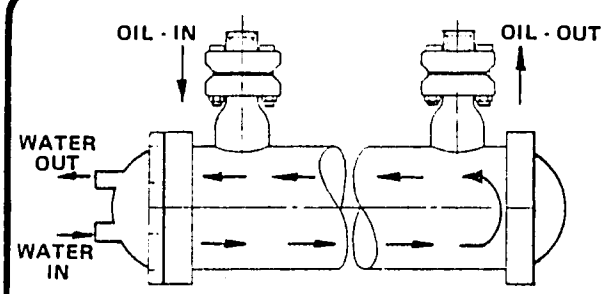

FIG. 34 TYPICAL TWO-PASS WATER COOLED OIL COOLER

- **Oil Cooler Water Regulating Valve** - These valves are factory adjusted but may require periodic re-adjustment if too high an oil temperature occurs that is not attributed to oil cooler fouling or oil pump problems. This valve should also be flushed out when the oil cooler is cleaned.

SP-24 *(Oil Cooler Water Regulating Valve Adjustment)*

1. To raise the temperature opening point, turn adjusting screw counterclock wise; to lower the temperature opening point, turn adjusting screw clockwise.

NOTE: Temperature closing point of valve is non-adjustable. Temperature actuated valves close approximately 3°F to 5°F (1.7°C to 2.8°C) below opening point.

SP-25 *(Oil Cooler Water Regulating Valve Flushing)*

1. Lift range spring follower with screwdrivers at two sides of lower spring cap to open valve.

2. Backflush oil cooler, holding valve open (this procedure should not affect valve adjustment).

3c. Seal Oil Cooler System (Direct Drive Models)

> CAUTION: The thermostat setting should not be altered in the field. If the unit is stopped by the thermostat, the cause should be determined and corrected.

- **Normal Operation** - This system is designed to hold the temperature of the oil being pumped to the seal to 115°F ± 5°F (46°C ± 3°C), under all conditions of operation by adjustment of its thermal expansion valve.

- **Abnormal Operation** - If the temperature operated expansion valve fails in the closed position, the unit will cycle off from the oil temperature thermostat, which senses the oil temperature out of the seal oil cooler. If the temperature operated expansion valve fails in the open position, the heat exchanger may flood through and the oil will be overcooled. The seal oil cooling system in conjunction with the liquid injection system will not perform properly if flashing liquid is supplied to the expansion valves.

- **Settings** - Thermostat: 130°F (54.4°C) cut out, 127°F (52.8°C) cut in. Temperature operated expansion valve: 115°F ± 5°F (46.1°C ± 2.7°C) oil temperature at bulbwell.

SP-26 *(Seal Oil Temperature Adjustment)*

NOTE: When adjusting the temperature setting on the thermal expansion valve to maintain seal oil temperature time must be allowed for the system to react and stabilize before further adjustment.

1. With a thermo-couple properly insulated and orientated at the thermal expansion valve bulbwell (on oil line) monitor the oil temperature.

2. Clockwise rotation of the temperature adjustment will lower oil temperature. Adjust accordingly.

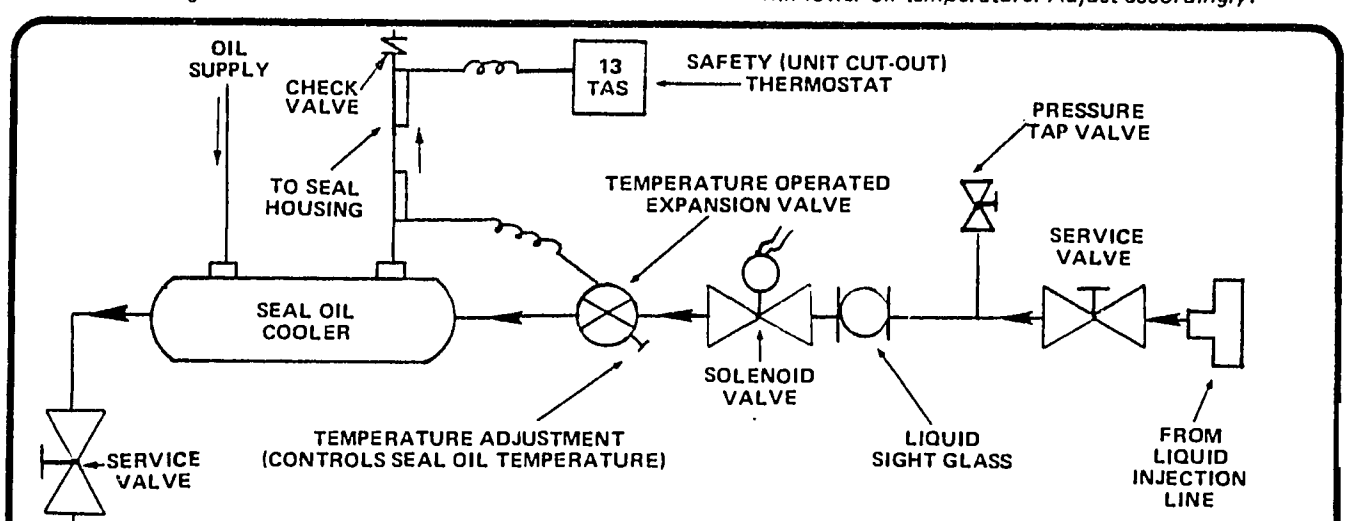

FIG. 35 TYPICAL SEAL OIL COOLING (DIRECT DRIVE)

4. HIGH/LOW SIDE COMPONENT MAINTENANCE

4a. Condenser Cleaning

To assure optimum efficiency, the condenser water tubes should be cleaned of scale, sludge, and slime deposits. Individual water conditions will determine how often the tubes are cleaned. One indication of tube fouling, is rising condensing pressures not attributed to air or other causes. There are two methods of tube cleaning.

1. Mechanical - Using brushes to remove loose material deposits.

2. Chemical - Flushing solvent to remove scale deposits.

NOTE: It is recommended that only a reputable professional chemical cleaning organization be used for the cleaning of the condenser. Damage could result to the heat exchanger from the use of an improper, solution or from exposure for too long a period.

SP-27 *(Mechanical Cleaning of Condenser)*

NOTE: Head gaskets need not be renewed after each head disassembly operation. Gasket must be replaced if it is physically disfigured or otherwise deteriorated.

1. Isolate water side of condenser, vent, drain and remove heads.

2. Remove loose material which has settled in the tubing with brushes. Flush thoroughly with fresh water, drain and restore heads and piping to vessel, torquing nuts evenly. Insure no entrapped air exists by venting high points of water system.

4b. Condenser Tube Plugging

Plugging has long since been accepted as standard service procedure. A maximum 5% of the total number of tubes may be plugged. The recommended method of repair can be performed without pumping out the refrigerant if due care is exercised.

SP-28 *(Tube Plugging)*

1. With unit off, shut down the condenser water flow.

2. Drain condenser water supply and return piping and remove both heads.

3. Conduct leak test (refer to SP-37)

4. Drill and tap tube sheet for 1/2 inch pipe plug or tapered plug and plug accordingly.

5. Install heads, with new gaskets if required. Connect water piping and fill condenser water supply.

6. Start pump and vent water system of entrapped air at high points of piping, and at vessel heads.

7. Add to refrigerant charge if necessary. (Refer to SP-15)

8. Check moisture indicators for evidence of water and change filter drier elements if necessary.

- **Condenser Relief Valves** - The condenser relief valve is adjusted and sealed at the factory. No maintenance is anticipated. However, if the relief valves do blow off at the design pre-set pressure, the cause should be determined and the relief valves should be replaced if they do not properly re-seat.

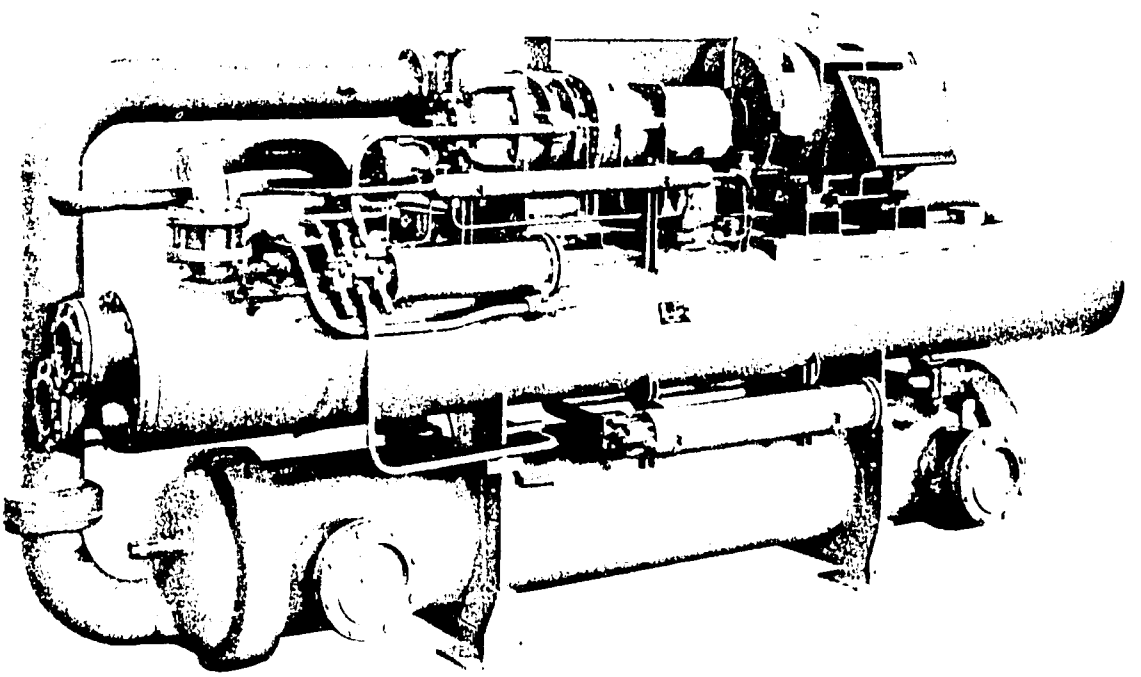

PCX-O DIRECT DRIVE PACKAGED CHILLER

F. COMPONENT MAINTENANCE CONTINUED

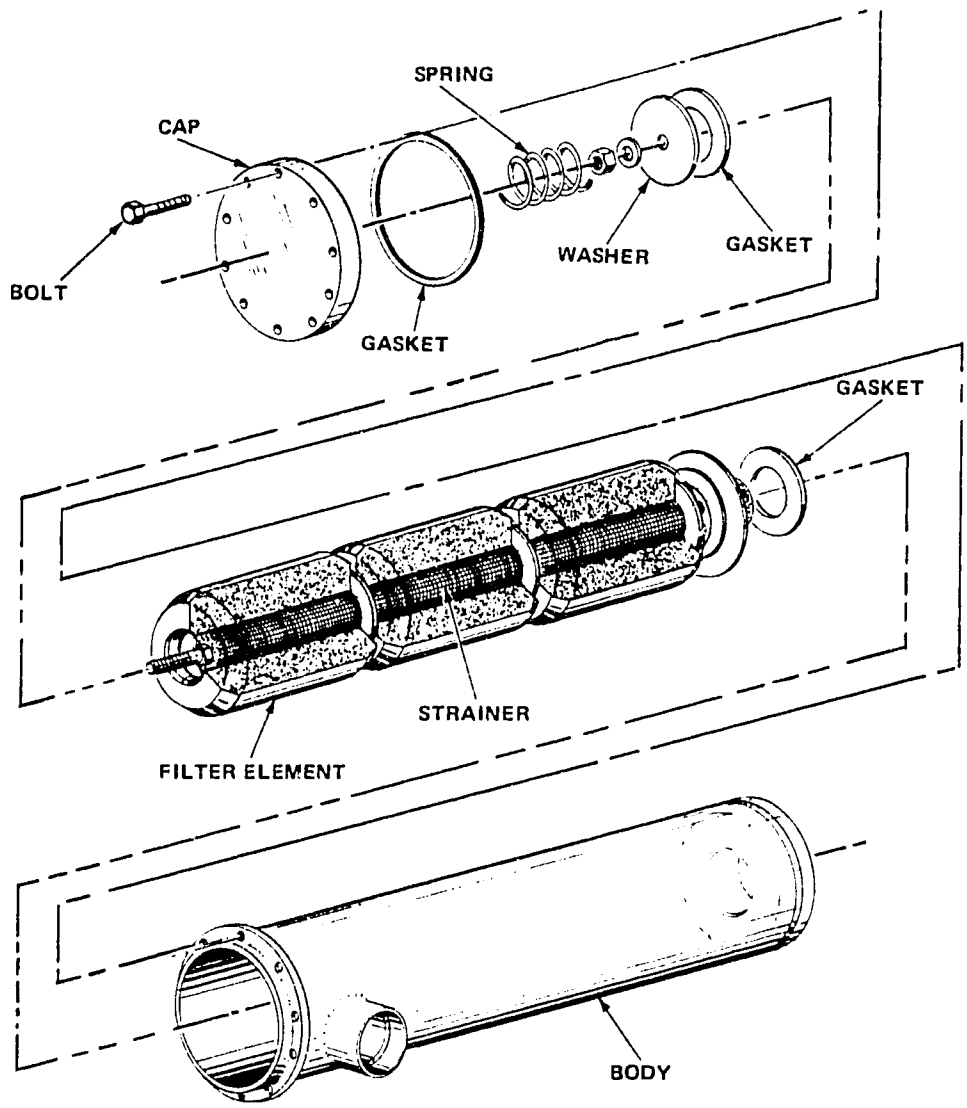

FIG. 37 TYPICAL REFRIGERANT FILTER DRIER

4c. Filter Drier Replacement

The filter drier elements should be replaced at scheduled intervals, when a specific maintenance action requires, or when moisture is evident in the system. The maximum operational pressure drop across the filter drier is 5 PSI (34.5kPa)..

SP-29 *(Filter Drier Replacement)*

1. Partially pumpdown system (Refer to SP-7)

2. Close both manual shut-off valves to isolate the filter drier.

3. Slowly vent enclosure to atmospheric pressure by opening plug.

4. Disassemble the drier assembly, discarding the cartridge elements and gaskets. Remove bolts evenly as spring is in compression to flanged cover.

5. Clean the housing and internal parts thoroughly. Inspect for damaged or deteriorated parts. Replace as needed.

6. Assemble the filter drier and torque bolts evenly.

7. Purge drier assembly and open isolation valves.

8. With the unit operating, check for leaks with a leak tester.

Once every two years, an inspection of the chiller tubes should be made, and the tubes cleaned if necessary. (flooded chiller models, clean inside tubes; direct expansion chiller models, clean outside of tubes).

4d. Cleaning Chiller

Because the chiller water or brine is a closed system, less frequent cleaning of the chiller tubes is required.

4d. Cleaning Chiller - continued

NOTE: It is recommended that only a reputable professional chemical cleaning organization be used for the cleaning of the chiller. Damage could result to the heat exchanger from the use of an improper solution, or from exposure for too long a period.

- **Chiller relief valve(s)** - The chiller relief valve is adjusted and sealed at the factory, no maintenance is anticipated. However, if the relief valve does blow-off at the design pre-set pressure, the cause should be determined and the relief valve should be replaced if it does not properly re-seat.

4e. Brine Maintenance

The chiller cooling medium must be periodically checked and maintained at design percent concentration, for a freeze point at least 10°F (6°C) below minimum saturated evaporator temperature. The actual freeze point may be determined by obtaining the specific gravity (with a hydrometer) and the temperature of the brine. With this data obtained, the percent concentration and freeze point may be determined from curves available from the brine manufacturer.

> WARNING The factory is not responsible for damage due to chiller freeze-up as a result of negligent periodic maintenance of brines.

- **Chloride Brines** - In addition to proper freeze point, chloride brines require special precautions. A rust inhibitor must be used in adequate quantity and the brine PH must be checked and adjusted periodically to prevent potential chiller corrosion. Brine PH must be maintained between 7.5 and 8.0 and must be adjusted before filling chiller.

NOTE: Consult brine manufacturer or a professional agency for mixing the solution, adjusting PH, and proportioning the rust inhibitor.

4f. Pilot Thermo Valve

The pilot thermo valve is located on a branch liquid line and is used in conjunction with the pilot operated solenoid thermal expansion valve. The pilot thermo valve is factory pre-set to maintain 10°F to 15°F (5.6°C to 8.3°C) superheat (direct expansion chillers) or 0 to 5°F (0 to 2.8°C) superheat (flooded chillers). Superheat is the temperature increase of the refrigerant gas above the saturation temperature at the existing pressure. The superheat setting can be re-adjusted, if required, to improve system performance.

- **Pressure and Temperature Measurement** - The suction gas temperature should be measured on the suction line at the pilot thermo valve bulbwell and must be insulated from ambient air temperature. Units that locate the bulb in the leaving chilled water or brine flange require temperature measurement on the suction line halfway up the vertical riser on the side of the pipe.

> CAUTION: The orientation of the thermocouple is critical for temperature measurement. Do not locate the thermocouple on any elbows.

The pressure may be measured by installing a calibrated gage at a gage connection closest to the temperature measurement. Both pressure and temperature measurements must be taken either upstream or downstream of the check valve.

SP-30 *(Superheat Adjustment)*

1. To increase superheat (decreases flow and reduces suction pressure), turn adjustment screw clockwise two full turns. Allow time for the system to react.

NOTE: As measured superheat decreases with a partial load, these adjustments should be made at 60% load or above. (With a dual pilot thermo valve arrangement, the load must be manipulated for each setting.)

2. Observe for increased superheat; adjust accordingly until design superheat is obtained.

- **Maintenance** - The only maintenance required for the pilot thermo valve is inspection, cleaning or replacing the cage assembly, and/or replacing the power assembly.

SP-31 *(Thermo-Expansion Valve Dissasembly)*

NOTE: The liquid line must be at atmospheric pressure before disassembly.

1. Remove the two cap screws, lift off the power assembly and remove the cage assembly.

2. Compress the cage spring to inspect pin and seat. If either are worn or eroded, replace cage assembly.

3. Check power assembly by pressing finger against buffer plate; replace assembly if plate is easy to move or depress.

> CAUTION: Be sure all three gaskets are replaced in their proper places on the cage; that the two lugs on the cage assembly feed into their grooves in the power assembly; and that valve parts are not forced together.

FIG. 40 TYPICAL PILOT THERMO VALVE

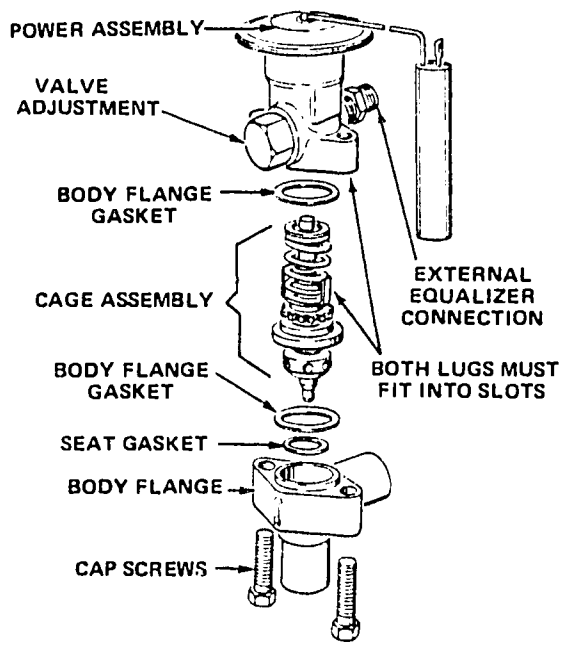

4g. Pilot Operated Solenoid Thermal Expansion Valve(s) (Main)

No adjustment of the pilot operated solenoid TX valve is necessary. This valve may be manually unseated by turning the manual opening stem beneath the seal cap on the top of the valve in a clockwise direction, until a stop position is reached.

NOTE: Always return the manual stem to the original position before starting the unit.

- **Maintenance**

NOTE: The most expedient method for inspection, cleaning or replacing parts would be to repair them in place.

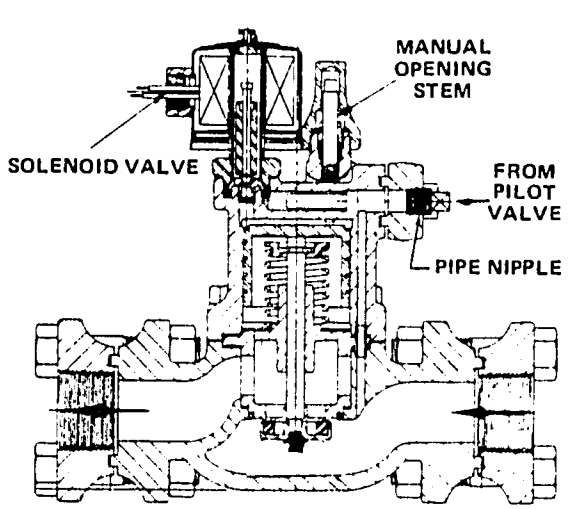

FIG. 41 TYPICAL P.O.S. THERMAL EXPANSION VALVE

SP-32 *(Disassembly/Maintenance P.O.S. Valve)*

1. Remove the solenoid coil.

2. Remove four cap screws, lift off upper body. Remove piston, inspect piston, rings, cylinder wall; check for free movement of piston in cylinder; wipe clean, oil all surfaces. Clean bleed port in top of piston.

3. Remove cage assembly, compress cage spring and examine valve disc, restrictor plug and seat; replace cage assembly if valve disc or seat are cut or eroded.

4. Re-assemble, insert cage with gaskets. Carefully place piston with rings in upper body. Re-assemble unit and tighten cap screws evenly. Replace pilot line connection, test for leaks and re-install.

5. Take apart the solenoid valve assembly. Check seat for wear, dirt, rust, etc. Replace if required.

TYPICAL THROTTLING ARRANGEMENT (1) PILOT, (1) MAIN EXPANSION VALVE

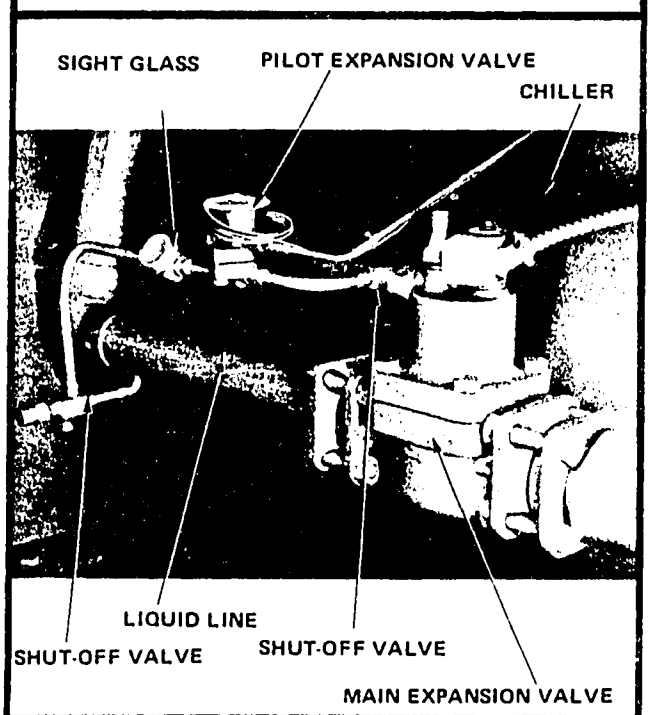

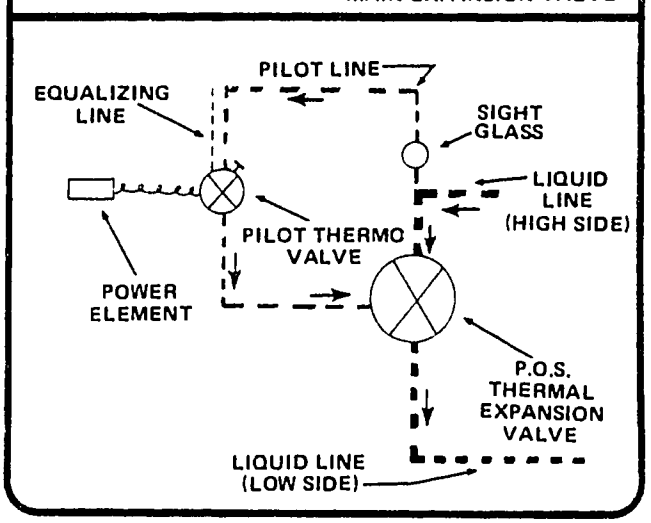

FIG. 42 TYPICAL THROTTLING ARRANGEMENTS

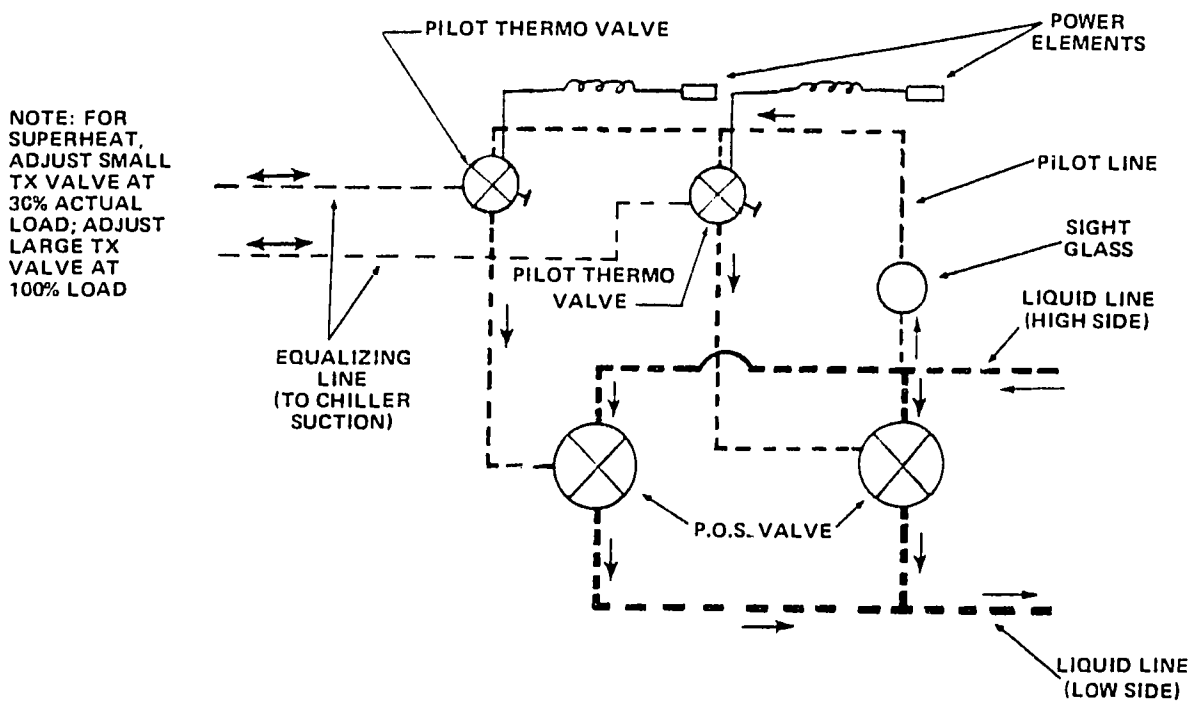

SCHEMATIC - (2) PILOT THERMO VALVES AND (2) PILOT OPERATED SOLENOID THERMAL EXPANSION VALVES.

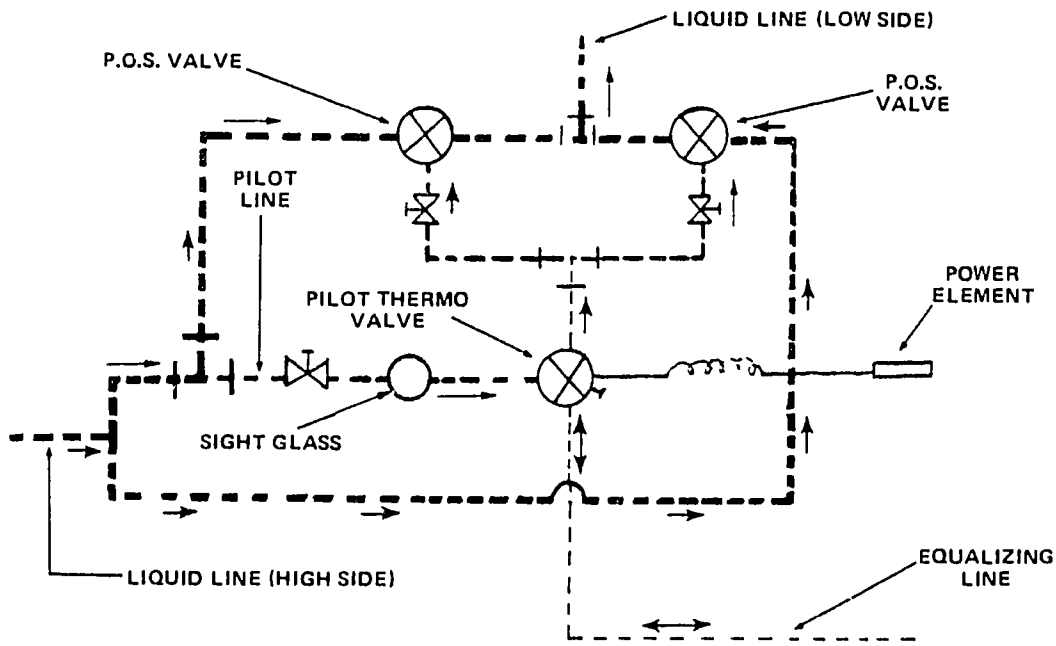

SCHEMATIC - (1) PILOT THERMO VALVE AND (2) PILOT OPERATED SOLENOID THERMAL EXPANSION VALVES

FIG. 43 - TYPICAL SUCTION FILTER - IN LINE TYPE

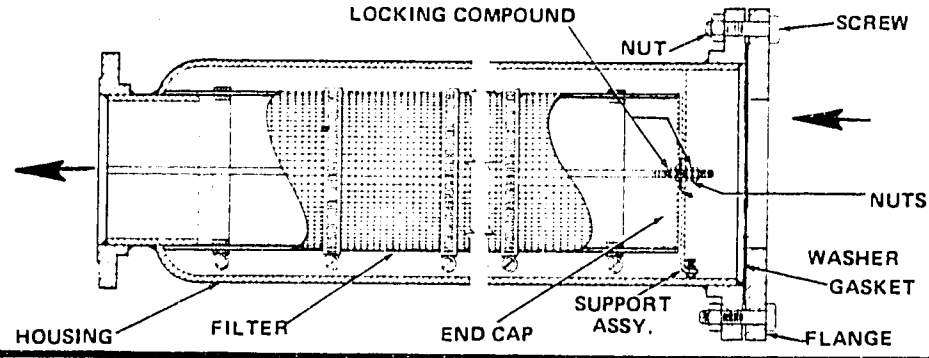

FIG. 44 - TYPICAL SUCTION FILTER - CHILLER HEAD TYPE

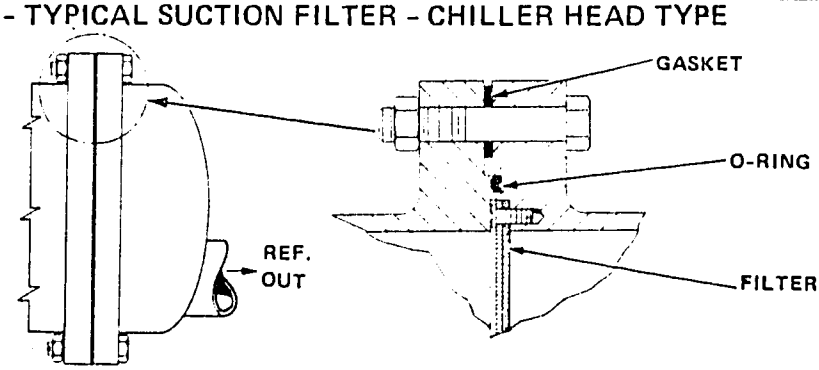

4h. Suction Filter

The suction filter should normally be inspected, cleaned or the element replaced only when a major overhaul is performed. Direct expansion type chiller units have the filter assembly located in the suction side of the chiller head. Flooded type chiller units have the filter located in the suction line near the compressor.

SP-33 *(Suction Filter Maintenance-In-Line Type)*

1. Transfer refrigerant to the condenser or remove the charge completely. (Refer to SP-7 thru SP-12) Isolate suction line and insure this portion of the system is at atmospheric pressure.

2. Remove insulation over suction filter.

3. Remove flange bolts, lift and remove housing weldment from piping. Remove old gaskets.

4. Remove support assembly and filter element and replace element.

NOTE: A locking compound has been applied on the nuts, when re-installing, be sure the compound is suitable for the refrigerant used and compatible with the refrigerant oil.

5. Position filter over support pipe. Install nut on center rod and push against end of filter.

NOTE: Adjusting screw on support assembly may be loosened for clearance.

6. Install second nut on center rod. Push support assembly hard against filter to crush overhanging media. Tighten outer nut against support assembly to secure it in place against filter core. Apply locking compound, then turn inner nut outward until it contacts inside surface of support assembly. Inner nut should now be in correct position.

7. Remove outer nut and support assembly. Install end cap, and position over filter. Install washers, support assembly and apply locking compound. Install outer two nuts. Tighten nut to clamp parts in place.

8. Adjust screw on support assembly to prevent end movement of filter. Apply locking compound to jam nut (on housing weldment) then tighten.

9. Re-install into piping using new gaskets, and torque bolts evenly. Epoxy insulation over housing weldment. Add refrigerant as required and test for any refrigerant leakage. (Refer to SP-15)

SP-34 *(Suction Filter Maintenance-Head Type)*

1. Transfer refrigerant to the condenser or remove the charge completely. Isolate the chiller and insure chiller is at atmospheric pressure (Refer to SP-7 thru SP-12).

2. Remove insulation at chiller suction head and suction flange. Remove flange bolts at chiller head and suction piping flange.

3. Remove chiller head and pipe assembly, head flange O-Ring and suction pipe flange gasket.

4. Disassemble filter element and inspect. Clean filter element with R-11 or replace if necessary.

5. Reassemble filter element to head with felt facing chiller.

6. Install chiller head assembly using new flange gaskets and head O-Ring.

7. Add refrigerant as required and test for any refrigerant leakage.

G. OPTIONAL SUBSYSTEM MAINTENANCE

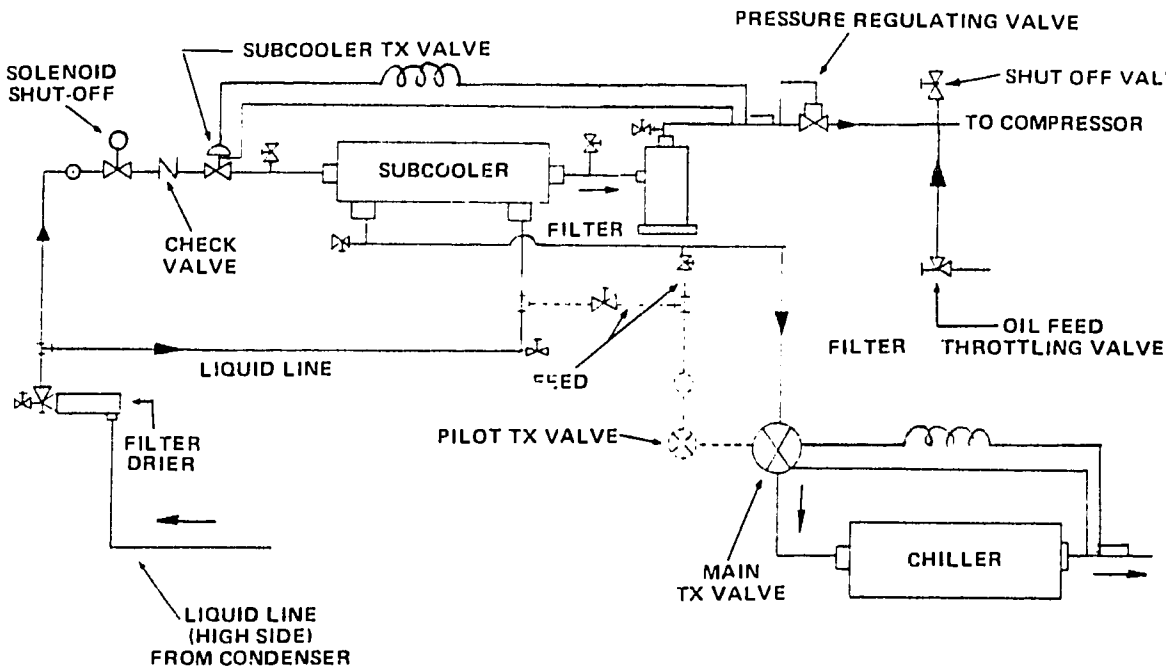

FIG. 45 TYPICAL VAPOR INJECTION SUBSYSTEM SCHEMATIC

1. VAPOR INJECTION

NOTE: It is necessary to have a load available that is sufficient to run the machine at full load at design conditions for the proper adjustment of the vapor injection system.

- **Adjustments**

- **Subcooler TX Valve** - Adjust superheat to 8°F to 12°F (4.4°C to 6.7°C) as measured at the subcooler outlet.

- **Evaporator Pressure Regulator** - Adjustment must be set at 10% below design conditions.

- **Feed Lines to Pilot TX Valve** - Use the warm liquid normally unless job conditions are such that unit operation is improved using cold liquid.

- **Oil Feed Valve** - Close valve until noise level increases; then back off 90° rotation.

- **Vapor Injection Shut-Off** - Normally set 65% slide valve travel to open solenoid. It can be adjusted from 40% to 75% to suit job conditions.

2. HOT GAS BYPASS (UNLOADED START)

The only periodic maintenance required on the unloaded start gas bypass is to insure the solenoid valve is operational and the timer maintains a 10 second timing period. The voltage supplied to the solenoid must not exceed ± 10% of the rated nameplate voltage. If the valve sticks or chatters, it should be disassembled and cleaned or replaced if required.

3. HOT GAS BYPASS (CAPACITY CONTROL)

The capacity control hot gas bypass requires a throttling valve adjustment upon installation and may require periodic readjustment. The throttling valve (located on the hot gas bypass line) should be adjusted at design percent slide valve activation as noted on the unit wiring diagram. The voltage supplied to the solenoid must not exceed ± 10% of the rated nameplate voltage. If the valve sticks or chatters, it whould be disassembled and cleaned or replaced if required.

SP-35 *(Hot Gas Bypass Adjustment)*

1. Position slide valve at design percent slide valve activation by manipulating the load to the chiller.

NOTE: Do not position slide valve by means of the temperature load controller. This will not reflect an accurate valve adjustment.

2. Monitor the temperature of the leaving chilled water or brine. if the temperature approaches the corresponding low pressure cut-out, open the throttling valve to avoid shut-down of the unit.

3. Rotating valve in the clockwise direction will lower leaving brine temperature, and may cycle off the unit. Rotating valve in the counter clockwise direction may load the compressor or may cycle the hot gas bypass solenoid on and off. Neither of these extremes are desirable. Adjust valve between these actions.

9,60

H. TYPICAL SYSTEM TESTS

MOTOR WINDING
1. INSULATION RESISTANCE TEST

This test is a measure of the dielectric resistance of the insulation to determine the condition of the motor. A D.C. voltage, greater than the operating voltage, is applied to the motor lead using a megohmmeter (megger). The resistance between ground and the motor lead is measured on the megger to determine the quality of insulation between the motor winding and ground. The megger is also used to determine the quality of insulation between the individual windings.

NOTE: Motor housing heaters must be activated a minimum of 24 hours to insure that the stator windings are at least 20°F (11°C) higher than the saturation temperature of the refrigerant vapor. The stator temperature is determined as specified in *SP-36*. A normal refrigerant charge in the unit is required.

CAUTION: As high voltages are used, extreme caution must be emphasized while conducting this test. All personnel in the area must be warned of the test being performed. All external power must be disconnected from the unit and safety gloves must be worn.

SP-36 *(Motor Insulation Resistance Test)*

1. Be sure that the main power source is disconnected from the unit.

2. Disconnect the motor terminal leads and the motor protector leads from their respective terminals on the compressor motor or oil pump motor.

3. Discharge any residual charges which may exist by grounding out each motor terminal.

4. Check the refrigerant pressure in the housing and with the proper refrigerant pressure temperature chart, convert the pressure to saturated temperature.

5. With an ohmmeter determine the resistance of each temperature sensor. With the table below convert this resistance to temperature. If this temperature does not exceed the saturated refrigerant temperature by at least 20°F (11°C) the housing heaters should be turned on for another 24 hours.

6. Phase to ground test - Connect the megger to terminal 1 and ground. Take a reading and record. Continue until readings of all terminals are taken and recorded.

7. Phase to phase test - Connect megger as shown in Figure 46 to isolate terminal 1. Take reading and record. Continue until all phases, as shown in Figure 46, have been isolated and their readings taken and recorded.

8. With the table below determine the minimum meg ohm values for the corresponding housing temperature. If the readings are below the minimum values, turn the housing heaters on for an additional 24 hours then repeat steps 5 through 7. If readings remain below minimum, contact National Service, Dunham-Bush, West Hartford, CT.

If readings are above the minimum, the power lead terminals may be connected and tightened in accordance with the label found in the cover of the terminal box.

9. Start the motor. After 8 or 10 hours of operation repeat this service procedure. If readings fall below the minimum values DO NOT START MOTOR *- Contact National Service, Dunham-Bush, West Hartford, CT.*

FIG. 46 PHASE TO PHASE TEST

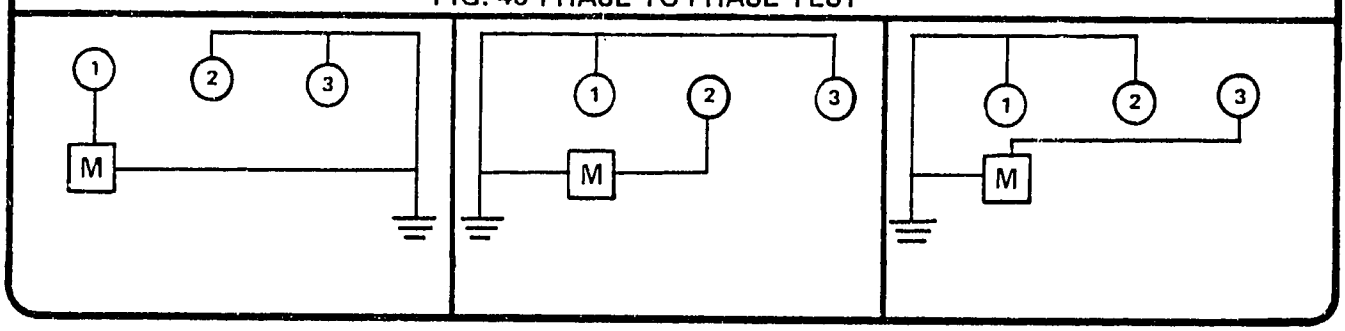

MINIMUM MEGGER VALUES

TEMP. SENSOR TERMINAL	CORRESPONDING TEMPERATURE		MINIMUM MEGGER READING	TEMP. SENSOR TERMINAL	CORRESPONDING TEMPERATURE		MINIMUM MEGGER READING	TEMP. SENSOR TERMINAL	CORRESPONDING TEMPERATURE		MINIMUM MEGGER READING	TEMP. SENSOR TERMINAL	CORRESPONDING TEMPERATURE		MINIMUM MEGGER READING	TEMP. SENSOR TERMINAL	CORRESPONDING TEMPERATURE		MINIMUM MEGGER READING
(OHMS)	(°F)	(°C)	(MEG OHMS)	(OHMS)	(°F)	(°C)	(MEG OHMS)	(OHMS)	(°F)	(°C)	(MEG OHMS)	(OHMS)	(°F)	(°C)	(MEG OHMS)	(OHMS)	(°F)	(°C)	(MEG OHMS)
68	40.0	4.4	215	78	90.1	32.3	60	88	139.5	59.7	5	98	187.4	86.3	5	108	233.3	111.8	5
69	45.0	7.2	185	79	95.1	35.1	50	89	144.4	62.4	5	99	192.1	88.9	5	109	237.8	114.3	5
70	50.0	10.0	165	80	100.1	37.8	40	90	149.2	65.1	5	100	196.3	91.3	5	110	240.7	115.9	5
71	55.0	12.8	135	81	105.1	40.6	35	91	154.1	67.8	5	101	201.4	94.1	5	111	242.3	116.8	5
72	60.0	15.6	125	82	110.0	43.3	30	91	158.9	70.5	5	102	206.0	96.7	5	112	251.1	121.7	5
73	65.0	18.3	115	83	115.0	46.1	25	93	163.7	73.2	5	103	210.6	99.2	5	113	255.5	124.2	5
74	70.0	21.1	90	84	119.9	48.8	20	94	169.5	75.8	5	104	215.2	102.0	5	114	259.8	126.6	5
75	75.0	23.9	85	85	124.8	51.6	15	95	[illegible]	78.4	5	105	219.8	104.3	5	115	264.1	128.9	5
76	80.0	26.7	75	86	129.8	54.3	10	96	170.0	81.1	5	106	224.3	106.8	5	116	268.9	131.3	5
77	85.0	29.4	65	87	134.7	57.1	10	97	182.7	83.7	5	107	228.8	109.3	5	117	272.7	133.7	5

H. TYPICAL SYSTEM TESTS CONTINUED

2. REFRIGERANT LEAK TEST

Pressure leak testing may be performed on either a component of the refrigerant system, or on the entire system.

> CAUTION: All gages must be valved off to avoid damage under high test pressure.

SP-37 *(Refrigerant Leak Test)*

1. *Complete System (Remove refrigerant charge and have sample tested for quality.*
   a. *Open all line valves and manually unseat the expansion valves.*
   b. *Add 25 psig of refrigerant R22. Back this up with dry nitrogen bringing the pressure up in steps to 90% of the relief valve setting for the chiller.*
   c. *Isolate the vessel. (King Valve)*
   d. *Bring up the pressure in the remainder of the unit to 90% of relief valve setting for the condenser.*
   e. *Check all vessels, valves and joints with an electronic leak detector, or halide torch. If leaks are found, isolate them and make repairs.*
2. *Partial System*
   When the charge is pumped into the condenser a low side pressure leak check can be made using refrigerant R-22.

> CAUTION: If nitrogen is used the low side test pressure must be kept 20 psig below the condenser pressure to prevent nitrogen from contaminating the charge.

   a. *Open all refrigerant valves on the low side and unseat the expansion valves.*
   b. *Check all vessels, valves and joints with an electronic leak detector or halide torch. If leaks are found, isolate them and make repairs.*

3. CHECKING PHASING OF MOTORS FOR PROPER DIRECTION OF ROTATION

a. Start-up unit in normal manner.

b. When the compressor starts to accellerate, immediately check the suction pressure gage. If the pressure is dropping, the compressor is wired correctly and turning in the proper direction. If the suction pressure is rising, the motor is wired incorrectly and the control circuit breaker should be turned off immediately. Operation of the compressor in the wrong direction at full speed can damage the compressor and system.

4. TYPICAL CONTROL OPERATION TESTS

> WARNING: The factory is not responsible for damage to any component of the unit as a result of mis-calibration and or testing of safety and operational controls.

NOTE: No deviations in system wiring from that shown on schematics furnished shall be made without prior written approval of Dunham-Bush, Inc.

> CAUTION: The following procedures require that all control settings, valves and other devices and adjustments on the unit be at normal settings, or conditions, at the start of each procedure except as specifically stated. At the completion of each procedure, restore all normal conditions to the unit before starting the next procedure.
>
> Compressor starts limited to 3 starts per hour.

The purpose of tripping the safety controls is to insure proper operation and calibration to prevent a system failure. The tests may also be used to troubleshoot a suspected control defect. **Consult the wiring diagram for design settings. The following procedures are of a typical unit. Consult the wiring diagram to verify sequence of events.**

Equipment: Test lamp, ohm or multi-meter, thermometer, thermocouple tester, stop watch, resistance decade box, test gages.

4a. Safety Controls (Test)

(IPS) High /Low Suction Pressure Switch (Low Pressure Function)

With the unit operating normally unload the compressor to a minimum load by means of the manual knob on the temperature load controller. Gradually close the drier service valve (high side) and insure the safety switch light illuminates while the unit shuts down at the design low pressure cut-out.

(IPS) High Low Suction Pressure Switch (High Pressure Function)

With the unit operating normally, position the slide valve in the 10% to 30% range by means of the manual knob on the temperature load controller. Slowly throttle a shut-off valve in the condenser field piping. Observe that the safety switch light illuminates while the unit shuts down at the specified high pressure cut-out.

> CAUTION: Do not exceed the design high pressure cutout setting or 90% of the pressure setting of the high side relief valve.

Manually reset the high discharge pressure switch.

(7TAS) Low Refrigerant Temperature (Flooded Chiller)

With the control power off, place a continuity tester in parallel with the control. Remove the bulb of 7TAS from its well and immerse in an ice bath. Monitor the temperature of the ice bath. Adjust the setting of the control and observe if the control switches position at the temperature of the ice bath. If the control is not faulty readjust to its proper setting.

(1TAS) Compressor Motor Thermal Protector (Hermetic Models Only)

Disconnect compressor start control circuit to prevent compressor from starting. Disconnect line voltage at oil pump motor starter (or circuit breaker) to prevent oil pump operation during test. Disconnect and insulate wire from one motor sensor. Connect a resistance decade box set at 75 ohms to bypass the sensor. Reset the safety device located on this circuit. Activate control circuit voltage. Raise the resistance in 1 ohm increments to 110 ohms. At this point, raise the resistance in 0.1 ohms increments. Continue until the safety switch light illuminates. The resistance at this point should be 115.4 ± .80 ohms.

(12TAS) High Oil Temperature Control (Direct Drive)

With control power off, remove the power element bulb from the well and immerse in water bath. Raise

H. TYPICAL SYSTEM TESTS CONTINUED

and lower temperature of water bath to determine cut-in, cut-out, setting. Adjust accordingly to design temperature.

(13TAS) Seal Oil Temperature Safety (Direct Drive)

With control power off, disconnect the control. Connect a continuity tester to the terminals of the control and immerse the bulb into a water bath of 130°F (54.5°C). The control should trip at 130°F ± 5°F (54.5°C ± 2.8°C). Make adjustments as necessary.

(2TAS) Freezestat

Monitor the temperature of the leaving water or brine With control power off disconnect the freezestat from the control circuit. Connect a continuity tester to the terminals of the control. Raise the setting of this control to the temperature of the leaving water or brine. If the temperature is the same the control is in calibration and can be reset and reconnected into the circuit. If the temperature setting does not agree the control is faulty.

(FLS) Flow Switch

With the unit off, disconnect the electrical power to the chilled water pump. Attempt to start the unit. The safety light should illuminate while the unit does not start. Connect electrical power to pump and start chiller pump. Throttle water flow to chiller while monitoring pressure drop. Continue throttling until flow switch trips. Record ΔP across chiller. Flow switch should trip at approximately 25% of design pressure drop which will be approximately 50% of the design flow.

(1TR) Anti-Short Cycle Timer

Start the unit and observe that the anti-short cycle timer period light illuminates simultaneously with the start-up delay light. Observe that the anti-short cycle timer period light extinguishes 20 minutes after the start-up delay light is extinguished. The unit must operate continuously during this period to observe this action. This procedure will de-energize the anti-short cycle timer coil without stopping the unit, or attempting to restart, during the 20 minute time lapse.

4b. Automatic and Operating Controls (Test)

(3TR) Oil Pump Shut Down Time Delay Relay

With the unit off, pull the circuit breaker supplying electrical service to the oil pump motor. Attempt to start unit in normal manner. The oil pump starter will pull in. Observe that the oil pressure failure light is illuminated and that the oil pump starter drops out 60 seconds later.

(2TR) Oil Pressure Failure Time Delay

Connect a test lamp in parallel with the oil failure time delay coil. With the unit operating normally, gradually close the oil filter shut off valve(s) to slightly below pressure switch cut out pressure (high side of filter). Observe that the oil failure light illuminates and unit shutdown occurs 20 seconds later. If the unit has not shut down after 24 seconds, stop the machine manually and replace the timer.

(4TR) Start-Up Time Delay

Connect a test lamp to terminals on each side of the start-up time delay coil. Start the unit in the normal manner, and observe that the compressor starts after 60 seconds with continuous electrical power to the start-up time delay coil.

(2PS) Low Suction Pressure Unload Control

With the unit operating normally unload the compressor to minimum load by means of the manual knob on the temperature load controller. Gradually close the drier service valve (high side) and observe if the (fast) unload solenoid energizes when the suction pressure drops to design cut-in. Gradually open the filter drier service valve, and observe the (fast) unload solenoid de-energizes when the suction pressure rises to design cut-out. The differential on this control is fixed when used on std. heat reclaim units.

(3PS) Differential Oil Pressure

Connect a test lamp to terminals on each side of the oil failure time delay coil. With the unit operating normally, gradually close the oil filter shut-off valve(s) (high side of filter). Insure that the oil failure time delay coil energizes, when the oil refrigerant discharge differential pressure gauge drops to the design cut-in pressure. Gradually open the oil filter valve(s) and insure that oil failure time delay coil is de-energized when the oil refrigerant discharge differential pressure rises to the design cut-out pressure.

> **CAUTION:** This procedure must be performed with sufficient speed so that the oil failure time delay coil is actually energized for less than 20 seconds to prevent unit shut-down.

(12TR) Seal Oil T'stat By-Pass Timer (Direct Drive)

Start unit when the compressor initially starts, commence timing with a stop watch. After four minutes elapse, observe the contacts open on the seal oil t'stat by-pass timer relay.

(8TAS) Liquid Injection Thermostat (If Equipped)

With all power removed from the unit, disconnect the wire leading from the liquid injection thermostat to the liquid injection solenoid, connect a continuity tester across the liquid injection thermostat terminals. Remove the liquid injection thermostat bulb from its bulbwell and submerge in water in a suitable container. Raise and lower the water temperature and observe that the thermostat contacts close and open within design settings.

(TLC) Temperature Load Controller

> **CAUTION:** Heat reclaim TLC require this test when in heat reclaim load.

- **Current Limiting Function** - connect an Amp Probe at the terminals of the motor starter, with the unit operating normally at approximately full load, slowly throttle the water service valve in the field piping of the condenser. Observe the slide valve unload when the compressor motor current reaches 1.06 x the motor nameplate rated load amps.

462

H. TYPICAL SYSTEM TESTS CONTINUED

- **Temperature Control Function** - with the unit operating normally, observe that the chilled water (brine) outlet is at design temperature, when the index mark on the temperature knob is vertical. Rotate the knob clockwise and observe the slide valve unload. Rotate the knob counterclockwise, and observe the slide valve load. Reset at design temperature, rotate the temperature adjusting knob slightly back and forth to determine that there is ½° to 1°F (.28°C to .56°C) difference between loading and unloading action. This is the dead band. Replace the TLC if the dead band exceeds 3°F (1.7°C) ΔT.

4c. Additional Controls For Heat Reclaim Units

(13PS) Head Pressure Controller and Control Shunt (STD Heat Reclaim)

With the control panel off, valve off and disconnect the discharge pressure line at the (13PS) control. Remove control cover to obtain access to adjusting screws. Attach a container of nitrogen to a pressure regulating valve, a calibrated gauge, a manual vent, and a shut-off valve. Secure the connecting hose to the (13 PS) control inlet. Raise the pressure to the control to 13 PS step one design cut-in. Step-one switch should trip at design pressure. To raise the trip point, rotate the screw clockwise. Vent pressure slowly and observe switch trip back to its original position. Failure to trip at design cut-out requires adjustment of the differential wheel. The differential (cut in minus cut-out = diff.) is increased by clockwise rotation of the wheel. Only the step-one switch has an adjustable differential.

> **CAUTION:** Do not exceed the proof pressure rating on the nameplate or the design cut-in/cut-out pressures.

Repeat for 13 PS step two switch; raise pressure for design cut-out and reduce pressure for design cut-in, repeat for 13 PS step three switch; raise pressure for design cut-in, reduce pressure for design cut-out.

(7CR) Slide Valve Block To Prevent Unloading And Hot Gas By-Pass (Low Slide Valve Limit) STD-Heat Reclaim

NOTE: This control can only be checked while the unit is consistently operating in the heat reclaim mode throughout the test.

When the heat reclaim light (6 LT) illuminates manually unload the compressor by means of the temperature load controller (TLC) manual knob. Observe the slide valve indicator percent increments. The slide valve travel should stop at design low percent limitation while the hot gas by-pass solenoid is activated. For servicing the IDR assembly, consult compressor service manual 6136.

(10CR) Slide Valve Block To Prevent Loading (OPT)

NOTE: This control can only be checked when the unit is operating in the heat reclaim mode.

Immediately after the heat reclaim light illuminates, load the compressor by means of the temperature load controller (TLC) manual knob. Observe the slide valve indicator percent increments. The slide valve travel should stop at design high percent limitation.

> **CAUTION:** The leaving brine temperature should be monitored and a load must be available to unit to prevent shutdown.

STD. = Standard OPT = Optional

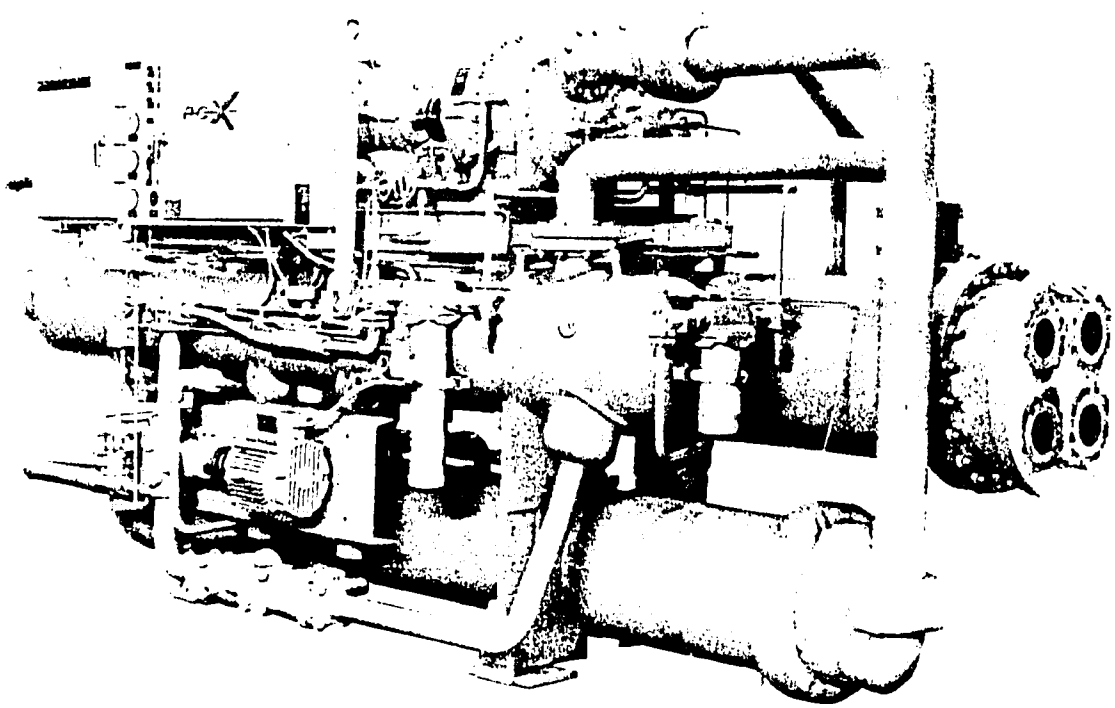

PCX-OHR - HEAT RECOVERY PACKAGED CHILLER

V. TROUBLE SHOOTING

A. GENERAL

Operating personnel must be completely familiar with the equipment and this manual. This will be necessary for correct diagnosis of any troubles and will permit immediate correction of minor difficulties. It is important that operators be able to quickly distinguish conditions requiring expert service in order to minimize down-time and maintenance expense. Comparison of the readings entered in the current Daily Log with those entered immediately following installation of the unit will be of considerable assistance in locating trouble areas.

To determine and isolate common problems which might occur, the following chart was made which lists symptoms, possible causes and remedies.

SYMPTOM	POSSIBLE CAUSE	REMEDY
A. Unit shuts down on compressor starter overload	1. Faulty compressor or motor 2. Overloads trip below 105% of full load amperage 3. Low voltage 4. Load limit relay out of adjustment	1. Contact Dunham-Bush Service Representative 2. Install properly sized overloads 3. Check line voltage. Must be ± 10% of rated voltage 4. Check and adjust for proper operation
B. Unit shuts down on oil pump starter overload	1. Cold oil 2. Low voltage 3. Bound Pump 4. Plugged oil filter 5. Faulty motor 6. Closed service valve	1. Check oil sump heaters for proper operation, repair and replace as necessary 2. Check line voltage must be ± 10% of rated voltage 3. Clean and repair as necessary 4. Clean and replace as necessary 5. Repair or replace as necessary 6. Open service valve
C. Unit shuts down on High-Low pressure switch	1. High Discharge Pressure a. Poor or no condensing water flow b. Condenser tubes fouled c. Refrigerant overcharge d. Air or noncondensables in refrigerant system e. Water supply to condenser is too warm f. Pressure switch out of calibration 2. Low Suction Pressure a. Plugged filter/drier b. Low refrigerant charge c. Low water flow thru chiller d. Fouled chiller e. Frozen chiller f. Pressure switch out of calibration g. Low condenser water temperature	1. a. Clean strainers, check setting of flow valve, check condenser pump - clean and repair as necessary b. Clean tubes, have water checked by water treatment specialist c. Remove excess refrigerant d. Purge air or non condensables e. Check, repair and adjust condenser water cooling facilities f. Reset or replace as necessary 2. a. Replace elements if pressure drop is above limits b. Check sight glass for flashing gas, check for leaks, repair leaks. Add refrigerant as necessary c. Check control valves for proper settings, check for dirty strainer, adjust clean and repair as necessary d. Clean chiller, consult water treatment specialist e. Check and reset or replace freeze-up switch as necessary, check brine for proper % solution f. Reset or replace as necessary g. Adjust condenser water regulating valve (if applicable). Check tower temperature controls
D. Shut down of unit on seal oil temp.	1. Low refrigerant charge 2. Inoperative TX valve 3. Inoperative seal oil cooler solenoid 4. Filter drier plugged	1. Check sight glass for flashing gas, check for leaks Repair leaks add refrigerant as necessary 2. Replace valve 3. Check coil for burnout 4. Clean or replace as necessary
E. Shut down on high oil temp.	Units with Liquid Injection: 1. Low refrigerant charge 2. Inoperative liquid injection TX valve 3. Inoperative liquid injection solenoid 4. Discharge temperature thermostats out of adjustment Units with Water Cooled Oil Cooler: 5. Oil cooler water valve out of adjustment 6. Inadequate water supply to oil cooler 7. Dirty oil cooler	1. Check sight glass for flashing gas, check for leaks, repair leaks and add refrigerant as necessary 2. Replace valve 3. Check coil for burnout 4. Reset to lower temperature 5. Readjust 6. Check condenser water pump and clean strainer 7. Check and clean tubes if necessary, check condenser water treatment installation
F. Unit shuts down on freezestat	1. Inadequate flow of chilled water 2. Malfunctioning freezestat 3. Incorrect TLC temperature setting	1. Check settings of valves, clean strainers, check chiller pump, clean and repair as necessary 2. Reset or replace as necessary 3. Readjust to desired leaving chilled water temperature
G. Unit shuts down on flow switch	1. Pump malfunctioning 2. Strainers plugged 3. Valves not set properly 4. Air in system 5. Flow switch inoperable	1. Check pump, clean and repair as necessary 2. Clean strainers 3. Reset valves 4. Bleed system 5. Replace

V. TROUBLE SHOOTING

A. GENERAL CONTINUED

SYMPTOM	POSSIBLE CAUSE	REMEDY
H. Unit shuts down on chilled water pump	1. Overload on pump	1. a. Pump malfunction, repair or replace as necessary b. Plugged strainer - clean c. Closed system valves, reset as necessary
J. Low discharge/oil temperature	1. Sump heaters not functioning during off period 2. Maladjusted expansion valves 3. Discharge temperature thermostat out of adjustment Water Cooled Oil Coolers 4. Oil cooler water valve out of adjustment 5. High water pressure	1. Repair and replace as necessary 2. Readjust superheat settings of main expansion valves, liquid injection and seal oil cooler expansion valves 3. Reset to lower temperature Water Cooled Oil Coolers 4. Readjust 5. Readjust water pressure regulator
K. High discharge/ oil temperature	1. Maladjusted expansion valve 2. Discharge temperature thermostat out of adjustment 3. Liquid injection solenoid valve malfunction Water Cooled Oil Coolers 4. Oil cooler water valve out of adjustment 5. Inadequate water supply to oil cooler 6. Dirty oil cooler	1. Readjust superheat settings of main expansion valves, liquid injection and seal oil cooler expansion valves 2. Reset to lower temperature 3. Check coil for burnout. Water Cooled Oil Coolers 4. Readjust 5. Check condenser water pump and clean strainer 6. Check and clean tubes
L. Unit periodically running low or losing oil	1. External oil leak 2. Low discharge superheat and or suction superheat 3. Units with jet pump not picking up oil - clogged lines or maladjusted valves 4. Discharge temperature thermostat out of adjustment 5. Liquid injection solenoid valve malfunction 6. Liquid injection TX valve malfunction	1. Check unit visually for leaks, repair as necessary 2. Readjust superheat as necessary 3. Repair or readjust as necessary 4 Reset to lower temperature 5. Repair or readjust as necessary 6. Repair or readjust as necessary
M. Shut down on low oil pressure	1. Oil filter plugged 2. Low oil pressure safety switch malfunction 3. Low discharge superheat and or suction superheat	1. Clean and replace as necessary 2. Repair or readjust as necessary 3. Readjust superheat as necessary

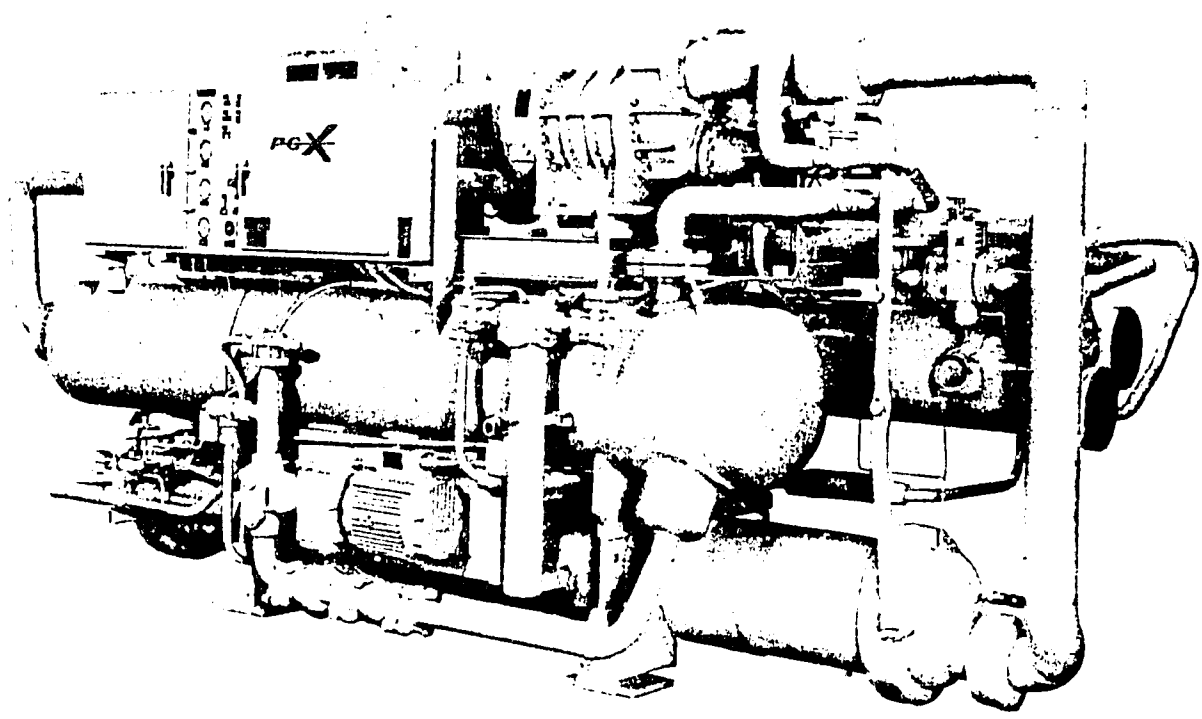

IPCX-O DIRECT DRIVE PACKAGED CHILLER

VI. APPENDIX

A. TYPICAL DAILY OPERATING LOG

FORM 9181A

DUNHAM-BUSH

DAILY OPERATING LOG
ROTARY SCREW COMPRESSOR PACKAGED CHILLER (PCX, IPCX)

UNIT MODEL _____ MONTH _____

UNIT SERIAL NUMBER _____ YEAR _____

		DATE		MONDAY	TUESDAY	WEDNESDAY	THURSDAY	FRIDAY	SATURDAY	SUNDAY
TIME		CHECK		☐AM ☐PM	☐AM ☐PM	☐AM ☐PM	☐AM ☐PM	☐AM ☐PM	☐AM ☐PM	☐AM ☐PM
ELAPSED TIME INDICATOR READING		HR								
SLIDE VALVE INDICATOR POSITION		%								
MOTOR CURRENT (COMPRESSOR)		AMPS								
MOTOR VOLTAGE (COMPRESSOR)		VOLTS								
REFRIGERANT SUCTION PRESSURE		PSIG	kPa							
REFRIGERANT SUCTION TEMPERATURE		°F	°C							
REFRIGERANT DISCHARGE PRESSURE		PSIG	kPa							
REFRIGERANT DISCHARGE TEMPERATURE		°F	°C							
NET OIL PRESSURE (GAGE MINUS DISCHARGE)		PSI	kPa							
SEAL DRAINAGE (DIRECT DRIVE ONLY)		CC/HR.								
SEAL OIL TEMPERATURE (DIRECT DRIVE ONLY)		°F	°C							
OIL TEMPERATURE ENTERING COMPRESSOR		°F	°C							
OIL SUMP SIGHT GLASS LEVEL		%								
WATER TEMPERATURES (CONDENSER)	ENTERING	°F	°C							
	LEAVING	°F	°C							
OUTSIDE AMBIENT AIR TEMPERATURE	WET BULB	°F	°C							
	DRY BULB	°F	°C							
REFRIGERANT INDICATORS		WET/DRY								
TRANSFER MEDIUM (BRINE, WATER) TEMPERATURES (CHILLER)	ENTERING	°F	°C							
	LEAVING	°F	°C							
CHILLED (AIR) MEDIUM (SYSTEM)	IN DRY BULB	°F	°C							
	IN WET BULB	°F	°C							
	OUT DRY BULB	°F	°C							
	OUT WET BULB	°F	°C							
RECORDED BY										

COMMENTS

_____

_____

FORM NO. 9181-1

DUNHAM-BUSH

MONTHLY OPERATING LOG
ROTARY SCREW COMPRESSOR PACKAGED CHILLER (PCX, IPCX)

UNIT MODEL _____ DATE _____

UNIT SERIAL NO. _____ RECORDED BY _____

☐ 1000 HOUR INTERVAL

LUBRICATION	OIL FILTER PRESSURE DROP		PSI	kPa	
	OIL PUMP MOTOR CURRENT		AMPS		
	OIL PUMP MOTOR VOLTAGE		VOLTS		
	OIL SUMP HEATER OPERATION		—		
	LOAD/UNLOAD SPEED (FULL STROKE)		MINUTES		
	OIL PUMP MOTOR STARTER AND RELAY CONTACTORS		—		
	SEAL OIL COOLER OPERATION (DIRECT DRIVE ONLY)		—		
	EVAPORATOR OIL RETURN VALVE (IF EQUIPPED)		—		
REFRIGERANT	COMPRESSOR MOTOR STARTER AND RELAY CONTACTORS		—		
	CONTROL AND GAGE CALIBRATION		—		
	REFRIGERANT LEAKAGE		—		
	FILTER DRIER PRESSURE DROP		PSI	kPa	
	LIQUID INJECTION OPERATION		—		
	DISCHARGE SUPERHEAT	DISCHARGE TEMP.	°F	°C	
		DISCHARGE PRESSURE	PSIG	kPa	
		SUPERHEAT	ΔF°	ΔC°	
	SUCTION SUPERHEAT	SUCTION TEMPERATURE	°F	°C	
		SUCTION PRESSURE	PSIG	kPa	
		SUPERHEAT	ΔF°	ΔC°	
HYDRONIC	CHILLER COOLING MEDIUM	FREEZE-POINT	°F	°C	
		PH (BRINE ONLY)	—		
	CONDENSER PRESSURE DROP (WATER SIDE)		PSI	kPa	
	CHILLER PRESSURE DROP (BRINE SIDE)		PSI	kPa	

COMMENTS _____

☐ 3000 HOUR INTERVAL

COMPRESSOR COUPLING ALIGNMENT (DIRECT DRIVE MODELS ONLY)		CM	INCH	
OIL PUMP COUPLING ALIGNMENT (DIRECT DRIVE OIL PUMP ONLY)		CM	INCH	
OIL ACIDITY (TOTAL ACID NUMBER)			TAN	
INSULATION RESISTANCE TEST	TEMP. SENSOR READINGS		OHM	
	MEG OHM READINGS		MEG OHM	

C. TYPICAL CONDENSER WATER PIPING

CONDENSER WATER PIPING

A relatively constant condensing temperature (compressor head pressure) should be maintained. The supply water temperature and flow rate must, therefore, be controlled to maintain this constant condensing temperature over the wide load and operating range of the packaged chiller. Valve manufacturers recommendations for piping should be followed.

If a cooling tower is supplying the condenser water, then some means to maintain a constant water supply temperature should be employed.

There are a number of different methods; e.g., cycling the tower fan off and on through a thermostat sensing the cooling tower sump water; temperature dampers controlling air flow (may also be used in conjunction with fan cycling) or by-passing all or part of the return water directly to the sump via a 3-way valve actuated by a controller sensing sump temperature.

The most stable compressor operation can be obtained with a water regulating valve modulating the water flow to the condenser, controlled by condensing pressure.

Heat reclaim units condense refrigerant at higher pressures while operating in the heat reclaim mode. However, this is justified by the amount of heating and cooling performed per kilowatt input. Controlling head pressures for heat reclaim units is highly specialized depending on the system application and is not included in this discussion.

The following are typical valving arrangements with suggested guidelines for the piping configurations. The cooling source is applicable to cooling towers, evaporative water coolers and natural sources.

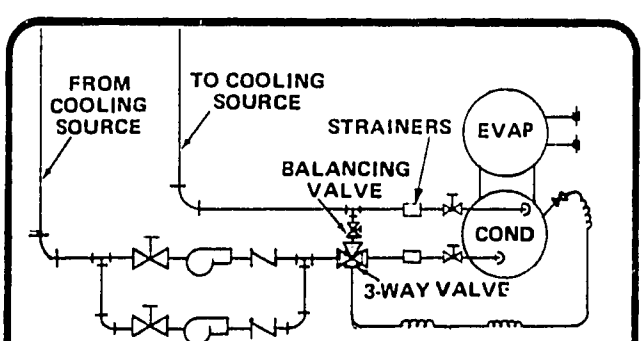

FIG. 47 TYPICAL DIVERSION OF ENTERING CONDENSER WATER

1. **Typical Diversion of Entering Condenser Water with Three-Way Valve.(Fig. 47)**

   Stable packaged chiller operation can be obtained by diverting a percentage of the entering water to bypass the condenser as a function of condensing pressure.

   With a diverting system, entering condenser water is regulated by a three-way valve sensing refrigerant condensing pressure. The water valve therefore maintains constant refrigerant head pressure in the condenser.

   - **Oil Cooler Piping** - Units that are equipped with a water cooled oil cooler have a two-way water regulating valve.(Fig. 48)

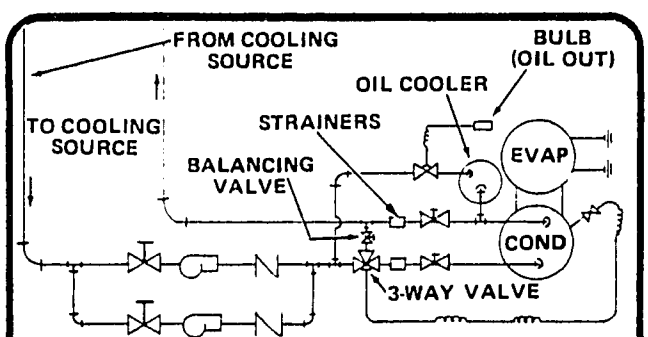

FIG. 48 TYPICAL DIVERSION OF ENTERING CONDENSER WATER WITH OIL COOLER

   With this configuration, the piping must be designed to have an uninterrupted water supply flow to the oil cooler. The supply to the oil cooler must be located upstream of the condenser water regulating valve.

2. **Cool Weather Package Operation**

   Any application of condenser water regulating valves with an anticipated entering water temperature of below 50°F (10°C) requires additional considerations. A minimum condensing pressure must be maintained to insure proper operation of the thermal expansion valves. If entering condenser water is not effectively regulated, proper operation of the packaged chiller may be jeopardized. Consult factory for parameters concerning your application.

3. **Cold Weather Operation (Cooling Towers)**

   If a system is to be operated in a cold climate [below 32°F (0°C)] some provision must be made to keep the cooling tower from freezing. Sump heaters or an indoor sump are two examples of how this can be accomplished. Consult the tower manufacturer for recommendations.

162

VI. APPENDIX

D. COMPRESSOR LUBRICATION REQUIREMENTS

The purpose of this chart is to define the type of oil used with large screw compressors (163, 204, 255mm) for various fluorocarbon applications.

TYPE OF OIL

TEMPERATURE		REFRIGERANT		
EVAPORATOR	CONDENSING	R-502 R-22	R-12	R-500
Above 20°F	Below 135°F	Oil 4	Oil 4	Oil 4
Above 20°F	Above 135°F	NA	Oil 14	Oil 14
Below 20°F	All	Oil 3	Oil 3	NA

This chart is used to define the oil pressure and oil failure switch settings for various applications.

REQUIRED OIL PRESSURE

TYPE SYSTEM	MINIMUM OIL FAILURE CUT-OUT SETTING (PSID)		FULL LOAD OIL PRESSURE (PSID)	
	BELOW 20° ET	ABOVE 20° ET	BELOW 20° ET	ABOVE 20° ET
PCX	20	20	40	40
IPCX	20	20	40	40
Heat Recovery	35	35	65	65

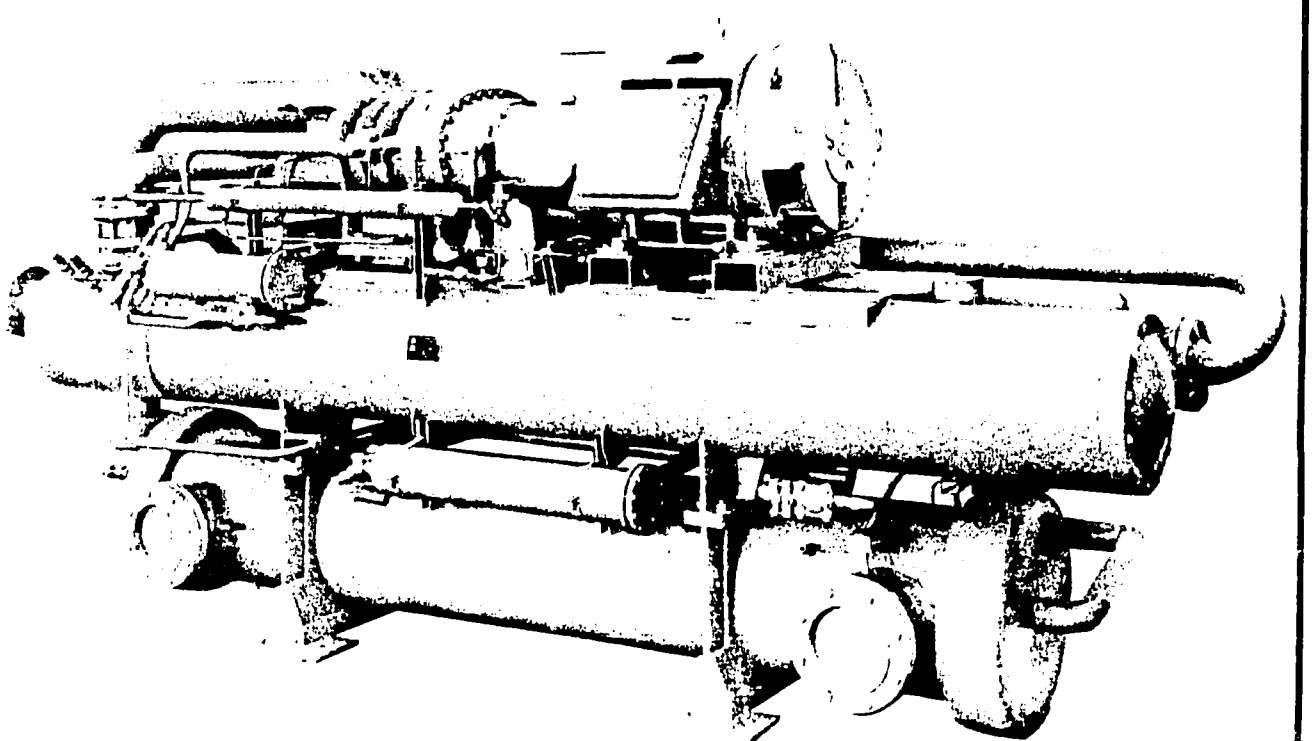

PCX-O DIRECT DRIVE PACKAGED CHILLER

E. TYPICAL INFORMATION TAGS AND LABELS

CAUTION

ALL ELECTRICAL CONNECTIONS MUST BE RETIGHTENED PRIOR TO STARTING THIS EQUIPMENT.

LOOSE CONNECTIONS CAN CAUSE DAMAGE TO THE WIRE, CONTROLS, MOTORS & ALSO CREATE A FIRE HAZARD.

TAG 56

USE
R22
ONLY

A-TAG 1-1

DISCHARGE
WARNING

OPEN THIS VALVE
BEFORE STARTING

DUNHAM-BUSH, INC.
COMPRESSOR DIVISION
WEST HARTFORD, CONN., U.S.A.

CHECK CONTROLS SETTINGS
BEFORE START-UP OF UNIT

CAUTION

'HAZARD OF ELECTRICAL SHOCK'
MORE THAN ONE DISCONNECT SWITCH MAY BE REQUIRED TO DE-ENERGIZE THE EQUIPMENT FOR SERVICING.

PLT2089

MOTOR TEMPERATURE SENSORS

USE ONLY THREE SENSORS-ONE IN EACH MOTOR PHASE

SENSORS 1 & 4 IN PHASE 1
SENSORS 2 & 5 IN PHASE 2
SENSORS 3 & 6 IN PHASE 3

COMBINATIONS OF SENSORS FROM BOTH SENSOR SETS CAN BE CONNECTED TO THE SAME MODULE; HOWEVER, TO DO SO THE COMMON TERMINALS OF BOTH SETS MUST BE CONNECTED TOGETHER.

AB-DCM 63

WARNING

DO NOT FORK LIFT FROM THIS END

A476029-001

CAUTION

PRIOR TO STARTING MOTOR:

STEP 1: MOTOR HOUSING HEATERS MUST BE ENERGIZED FOR 24 HOURS.
STEP 2: THE MOTOR TEMPERATURE RISE MUST BE AT LEAST 20°F ABOVE AMBIENT.
STEP 3: THE MOTOR MEGOHM READING MUST BE AT LEAST 50 MEGOHMS.

IT MAY BE NECESSARY TO LEAVE HEATERS ON LONGER THAN 24 HOURS TO ACHIEVE 20°F TEMP. RISE & 50 MEGOHMS IN SOME CASES.

STK36

TESTING OF MOTOR TEMPERATURE SENSORS

TO PREVENT PERMANENT DAMAGE TO THE MOTOR SENSORS, DO NOT CHECK THE SENSOR RESISTANCE WITH ANY INSTRUMENT POWERED BY A SOURCE GREATER THAN 6 VOLTS

AG 69-1

910

E. TYPICAL INFORMATION TAGS AND LABELS

OIL PUMP MOTOR POWER SUPPLY WIRING

THE POWER SUPPLY TO OPERATE THE OIL PUMP MOTOR IS FURNISHED AND WIRED BY THE CUSTOMER.

THE SUPPLY IS CONNECTED TO TERMINALS L1, L2, AND L3 OF THE OIL PUMP MOTOR CONTACTOR OR STARTER LOCATED IN THE CONTROL PANEL.

TAG 68

CAUTION

PRIOR TO STARTING THIS UNIT PHASE SEQUENCE MUST BE CHECKED TO AGREE WITH THE CONNECTIONS OF THE OIL PUMP & COMPRESSOR MOTORS TO INSURE PROPER DIRECTIONAL ROTATION. SEE INSTRUCTION MANUAL FOR VISUAL METHOD OF DETERMINING ROTATION WITH THE USE OF THE SYSTEM GAGES

TAG 67

RELIEF VALVE VENTING INFORMATION

CAUTION

1. FLEXIBLE CONNECTIONS MUST BE USED BETWEEN RELIEF VALVE AND EXTERNAL PIPING AND PIPING MUST BE SUPPORTED TO PREVENT STRAIN FROM BEING TRANSMITTED TO THE RELIEF VALVE ASSEMBLY
2. WHEN TIGHTENING THE VENT CONNECTIONS TO THE RELIEF VALVE, HOLD THE UPPER HEX PORTION OF THE RELIEF VALVE WITH A WRENCH TO PREVENT IT FROM TURNING. THIS WILL PREVENT GASKET DAMAGE AND POSSIBLE LEAKES. DO NOT OVER TIGHTEN THE CONNECTIONS TO THE RELIEF VALVES.

P/N 050126A1

WARNING

THIS MOTOR LIMITED TO THREE STARTS PER HOUR.

RESTARTING MORE OFTEN WILL DAMAGE MOTOR.

DO NOT BYPASS OR ADVANCE ANTI RECYCLE TIMER.

WARNING

ATTENTION: SPECIAL FILTER ASSEMBLY INSTRUCTIONS — P/N: 050018A1

(1) THE ELEMENTS IN THIS SCHROEDER FILTER REQUIRE NEOPRENE GASKETS FOR FREON REFRIGERANTS
(2) STANDARD SCHROEDER ELEMENTS SUCH AS THOSE OBTAINED FROM LOCAL SOURCES HAVE BUNA N GASKETS. THESE GASKETS CANNOT BE USED WITH FREON REFRIGERANTS AND MUST BE DISCARDED
(3) FILTER ELEMENTS WITH NEOPRENE GASKETS ARE D/B PART NO. FLR125 AND ARE MARKED G603
(4) MOLDED NEOPRENE GASKETS ARE D/B PART NO. GKT543 AND ARE IDENTIFIED WITH A BLUE MARK
(5) FLAT NEOPRENE GKT523 OR MOLDED NEOPRENE GASKETS GKT543 CAN BE REUSED IF NECESSARY. IT IS RECOMMENDED THAT SPARE FLR125 SETS BE ORDERED TO BE AVAILABLE WHEN REQUIRED

WARNING

MOST WATER SUPPLIES CONTAIN DISSOLVED OR SUSPENDED MATERIALS WHICH CAUSE SCALE FORMATION, CORROSION AND PROPOGATE SLIME, ALGAE, ETC. IN ORDER TO PREVENT EXCESSIVE MAINTENANCE COSTS DUE TO SCALE FORMATION AND POSSIBLE TUBE FAILURE

IT IS ESSENTIAL

THAT BOTH CONDENSER WATER AND CHILLER SYSTEM WATER BE ANALYZED BY A QUALIFIED WATER TREATMENT COMPANY.

AND THEIR RECOMMENDATION FOR PROPER CONDENSER AND CHILLED WATER TREATMENT BE FOLLOWED

ANY FAILURE DUE TO IMPROPER AND/OR LACK OF WATER TREATMENT

WILL VOID THE WARRANTY.

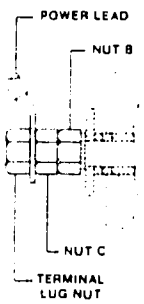

POWER LEAD TERMINAL TIGHTENING PROCEDURE

1. NUT C TO BE JAMMED AGAINST NUT B WHILE HOLDING NUT B.
2. INSTALL POWER LEAD TERMINAL ON STUD AND TORQUE TERMINAL LUG NUT TO VALUE IN TABLE BELOW WHILE HOLDING NUT C.
3. MAKE SURE THAT TERMINAL STUD DOES NOT TURN WHILE TORQUING TERMINAL LUG NUT

TERMINAL TORQUING SPEC.

COMP MODEL	TERMINAL LUG NUTS
102	3 LB. FT.
127	15 LB. FT
163, 204	20 LB. FT.
255	30 LB. FT.

OCM 68

KEEP VALVES CLOSED EXCEPT WHEN READING GAUGES

CAUTION — PLT 2224

IMPORTANT MOTOR APPLICATION INFORMATION

1. THE OVERLOADS PROTECTING THIS MOTOR MUST BE SET TO TRIP AT OR BELOW THE MAXIMUM CONTINUOUS CURRENT (AMPERE) RATING STAMPED HERE _____
2. THE STARTER AND OVERLOADS MUST CONFORM TO DUNHAM-BUSH SPECIFICATION ES-ELC-9
3. NO CONTROLS, MANUAL OR AUTOMATIC, WHICH WILL START OR STOP THE MOTOR INDEPENDENTLY OF THE UNIT CONTROL CIRCUIT AND/OR BYPASS THE ANTI-RECYCLE TIMER ARE ALLOWED
4. MAXIMUM VOLTAGE UNBALANCE ALLOWED AT THE COMPRESSOR MOTOR TERMINALS IS 1%.
5. MAXIMUM VOLTAGE TOLERANCE IS ±10% OF STAMPED COMPRESSOR NAMEPLATE VOLTAGE MEASURED AT THE COMPRESSOR MOTOR TERMINALS
6. FAILURE TO ADHERE TO THE ABOVE WILL VOID THE WARRANTY

DUNHAM-BUSH

AIR CONDITIONING, REFRIGERATION, HEATING PRODUCTS AND ACCESSORIES

MAIN OFFICES

175 SOUTH STREET WEST HARTFORD, CONNECTICUT 06110

FACTORIES

WEST HARTFORD DIVISION
179 South Street
West Hartford, Connecticut
06110

HARRISONBURG DIVISION
101 Burgess Road
Harrisonburg, Virginia
22801

MARSHALLTOWN DIVISION
811 East Main Street
Marshalltown, Iowa
50158

RIVERSIDE DIVISION
1850 Massachusetts Ave.
Riverside, California
92507

SUBSIDIARIES

DUNHAM-BUSH of Canada Limited
140 Wendell Avenue
Weston, Ontario

DUNHAM-BUSH, LTD.
Fitzherbert Road, Farlington
Portsmouth, Hampshire, England

DUNHAM-BUSH INTERNATIONAL: 175 South Street, West Hartford, Connecticut 06110, U.S.A.
CABLE: DUNBUSH or TELEX: 994469

SALES OFFICES

ALABAMA
Birmingham
Mobile

ARIZONA
Phoenix

ARKANSAS
Little Rock

CALIFORNIA
Arcadia
Los Angeles
San Diego
San Francisco

COLORADO
Denver

CONNECTICUT
Hartford
New Haven

FLORIDA
Jacksonville
Miami
Orlando
Tampa

GEORGIA
Atlanta

HAWAII
Honolulu

ILLINOIS
Chicago
Peoria
Rockford

INDIANA
Indianapolis
Michigan City

IOWA
Des Moines

KANSAS
Lenexa

KENTUCKY
Louisville

LOUISIANA
New Orleans
Shreveport

MAINE
Lewiston

MARYLAND
Baltimore
Silver Spring

MASSACHUSETTS
Boston
Springfield

MICHIGAN
Detroit
Grand Rapids
Kalamazoo

MINNESOTA
Minneapolis

MISSISSIPPI
Jackson

MISSOURI
Kansas City
St. Louis

MONTANA
Billings
Great Falls

NEBRASKA
Omaha

NEW JERSEY
Little Falls
South Amboy
Union

NEW MEXICO
Albuquerque

NEW YORK
Albany
Buffalo
New York City
Rochester
Syracuse

NORTH CAROLINA
Charlotte
Greensboro

OHIO
Akron
Cincinnati
Cleveland
Columbus
Dayton
Delaware
Toledo

OKLAHOMA
Oklahoma City
Tulsa

OREGON
Portland

PENNSYLVANIA
Harrisburg
Philadelphia
Pittsburgh
Pittston

RHODE ISLAND
Providence

SOUTH CAROLINA
Columbia
Greenville

TENNESSEE
Chattanooga
Memphis
Knoxville
Nashville

TEXAS
Austin
Corpus Christie
Dallas
El Paso
Fort Worth
Houston
Lubbock
San Antonio

UTAH
Salt Lake City

VIRGINIA
Alexandria
Richmond

WASHINGTON
Seattle
Spokane

WEST VIRGINIA
Barboursville

WISCONSIN
Milwaukee

DUNHAM-BUSH, INC. • West Hartford, Connecticut 06110, U.S.A.

51388-10M-7174A-1278B

one of The Signal Companies

9.7.d

Exhibit G-7

FORM NO. 3440B

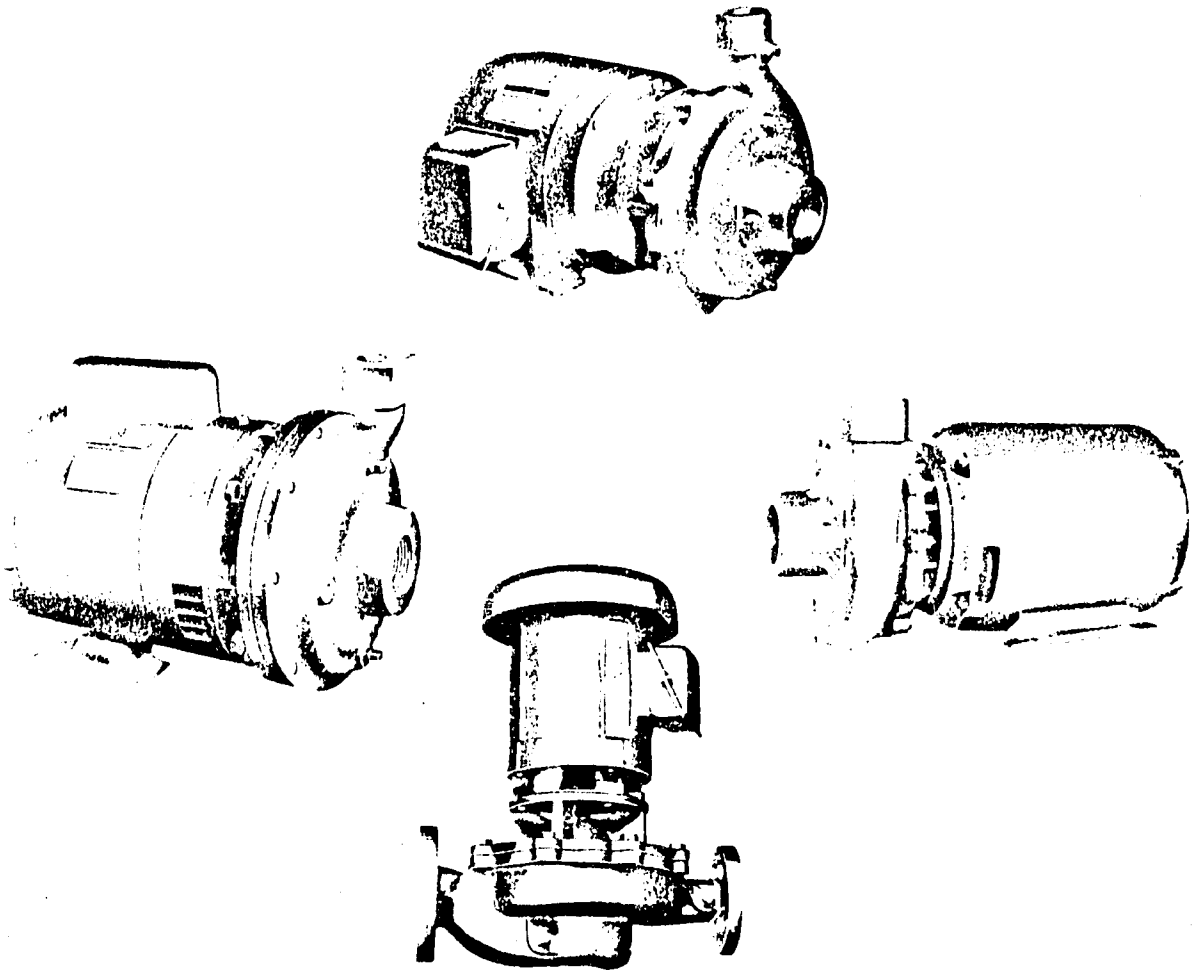

DUNHAM-BUSH

CENTRIFUGAL PUMPS
TYPE A5, A7, A9 AND PM7

Installation, Operation and Maintenance Instructions

973

CENTRIFUGAL PUMPS
TYPE A5, A7, A9 AND PM7

INDEX

DESCRIPTION	PAGE
INTRODUCTION	1
SECTION I INSTALLATION	
LOCATION	1
FOUNDATION	1
MOUNTING	1
PIPING	1
SUCTION PIPING	1
DISCHARGE, PIPING	2
PIPING FOR SPARE PUMPS	2
INSTALLING PUMP	2
SECTION II OPERATION	
PUMP STARTING	2 - 3
OPERATING AT REDUCED CAPACITY	3
OPERATING ROUTINE	3
STOPPING	3
SECTION III MAINTENANCE	
A5 PUMP DISASSEMBLY AND ASSEMBLY	3 - 4
A9 SERIES 'A' PUMP DISASSEMBLY AND ASSEMBLY	4 - 5
A7/PM7 DISASSEMBLY AND ASSEMBLY	5 - 7
A7A/PM7A DISASSEMBLY AND ASSEMBLY	7 - 9
SECTION IV TROUBLE SHOOTING, NOMENCLATURE, ORDERING PROCEDURE AND PARTS LIST	
TROUBLE SHOOTING	9
NOMENCLATURE	10
ORDERING PROCEDURE	10
A5 PUMPS AND PARTS LIST	
1/3 HP, 1/2 HP, AND 3/4 HP	11
1 HP, 1½ HP AND 2 HP	12
A9 SERIES 'A' PUMPS AND PARTS LIST	
1/2 HP, 3/4 HP AND 1 HP	13
1 1/2 HP	14
2 HP	15
3 HP	16
5 HP	17
7 1/2 HP	18
10 HP AND 15 HP	19
A7 PUMPS AND PARTS LIST	
3/4", 1 1/4" AND 1 1/2"	20
2" AND 2 1/2"	21
PM7 PUMPS AND PARTS LIST	
1", 1 1/4" AND 1 1/2"	22
2" AND 2 1/2"	23
A7A PUMPS AND PARTS LIST	
3/4", 1 1/4" AND 1 1/2"	24
PM7A PUMPS AND PARTS LIST	
1", 1 1/4" AND 1 1/2"	25

INTRODUCTION

The Dunham-Bush Type A5, A7 and A9 are radially split, single stage, motor mounted centrifugal pumps. The PM7 is a radially split, single stage, close coupled pipe mounted centrifugal pump. These pumps are supplied with an end face mechanical shaft seal installed, which is especially selected for reliability and life on the particular pump application. All pumps are supplied as complete units including motor.

SECTION -1
PUMP INSTALLATION

A. LOCATION

1. For satisfactory operation of any centrifugal pump it is necessary that adequate "Net Positive Suction Head" (NPSH) be available at the pump suction connection (NPSH is the total head in feet absolute, less the vapor pressure of the liquid in feet absolute, available to the pump). For this reason the pump should be located as close to the liquid source as possible.
2. Adequate head room should be provided for the use of installing equipment.
3. Adequate space should be allowed for inspection during pump operation.

B. FOUNDATION

1. The foundation must be solid and substantial enough to absorb mechanical vibration. In general concrete foundations are the most satisfactory and when used, bolts should be supplied which are imbedded for pump footing. Bolts should be long enough to insure proper tightening (minimum of six (6) threads should protrude beyond nut), and it is recommended that each bolt (standard or "J" type) be fitted with a pipe sleeve that is approximately 2½ times the bolt diameter and whose length is twice the inside diameter of the sleeve. When using a standard bolt (figure 1) a washer should be used to support the head of the bolt in the sleeve. After the concrete foundation has been poured, the pipe sleeve remains in place allowing for alignment with the holes in the motor feet.
2. When "J" type bolts (figure 2) are used the same procedure is used except that no washer is needed.
3. If the foundation has been laid, holes may be drilled and expansion bolts used to anchor the pump to the foundation.

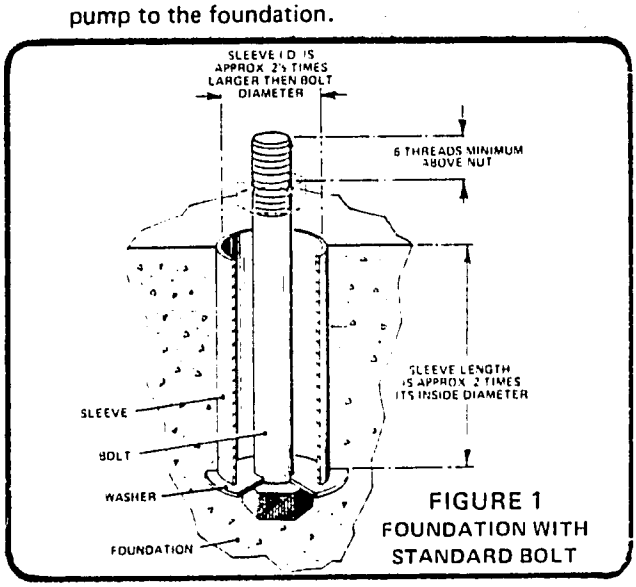

FIGURE 1
FOUNDATION WITH STANDARD BOLT

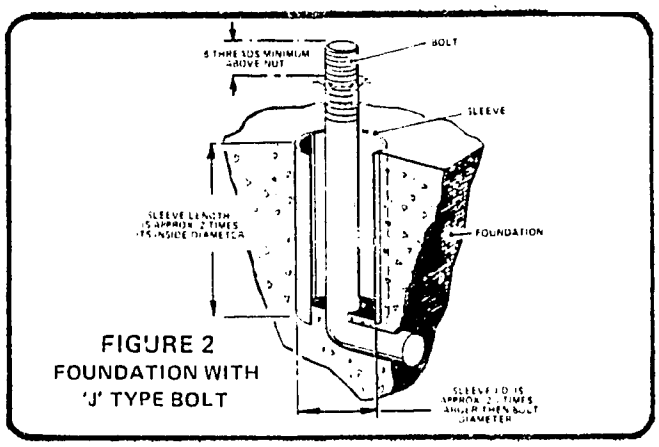

FIGURE 2
FOUNDATION WITH 'J' TYPE BOLT

C. MOUNTING PUMP

Foot Mounted

1. Uncrate the pump leaving all instructions attached and install at its' place of operation.
2. Locate the leveling plates and shims at each foundation bolt.
3. Level the motor perpendicular to shaft, shimming as necessary.
4. Level the motor parallel to shaft and tighten the nuts on the foundation bolts evenly.

Pipe Mounted

1. Horizontal Lines – Normally the pump is mounted with the motor perpendicular to the ground with the motor end up. The piping must be adequate to support both the piping and pump.
2. Vertical Lines – The motor will be parallel to the floor and may require additional support other than that offered by the piping.

D. PIPING

1. Both suction and discharge piping should be as short and as direct as possible. There should be as few fittings and bends as possible. Bends, where used should be of the long radius variety.
2. Piping should be supported near the pump to prevent strains from being transmitted to the pump, and piping at the pump suction and discharge should be as large or larger than the openings in the pump.
3. Gate valves and pressure gages should be installed in both the suction and discharge line to facilitate pump maintenance and performance checks.

E. SUCTION PIPING

1. Suction piping must be free of vapor trapping pockets
2. In horizontal piping leading to the pump only eccentric-reducers should be used (See Fig. 3 and 4).
3. The suction pipe must be free from air leaks and provisions should be made for the expansion of hot lines.

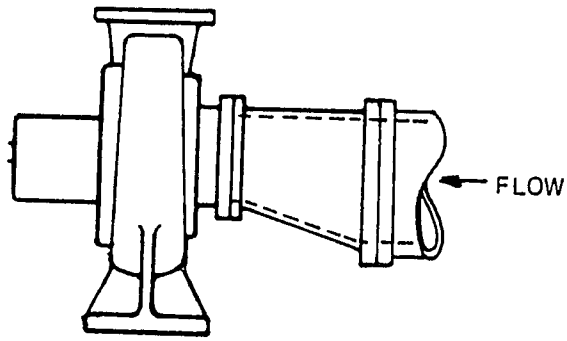

FIGURE 3
CORRECT SUCTION PIPING FOR ECCENTRIC REDUCER

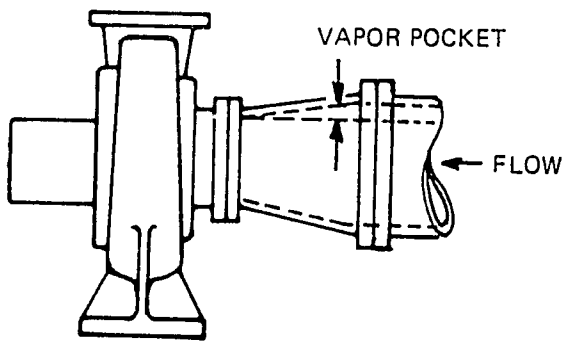

FIGURE 4
INCORRECT SUCTION PIPING FOR ECCENTRIC REDUCER

4. It is recommended that a strainer be installed near the pump suction inlet to catch scale or other foreign material. A pressure gage installed on each side of the strainer can be used for measuring the pressure drop across the strainer.

5. If a strainer or foot valve is to be used on the inlet end of the suction line, the free area through the strainer or valve should be approximately 2½ to 4 times the area of the suction pipe.

F. DISCHARGE PIPING

1. On some installations, a check valve and balancing cock in addition to a gate valve may be required in the discharge piping. The check valve would be used to prevent liquid from running back through the pump in case of failure of the motor. The balancing cock is used to control the pumps' operating capacity by providing a changeable control in the piping system. The gate valve would be used in priming, starting and shutting down the pump.

2. When valves are required in the discharge line, they should be located as near as possible to the pump.

3. In some applications when the pump may be operated with zero flow, provisions should be made for recirculating a portion of the liquid from the discharge to the suction of the pump to reduce the possibility of overheating.

G. PIPING FOR SPARE PUMPS

Spare pumps in high temperature service should be piped so that hot liquid from the discharge of the operating pump circulates continuously through a by-pass to the spare pump and back to the suction of the operating pump. This can greatly reduce thermal shock when the spare pump is started.

H. INSTALLING PUMP

1. Make up the piping to the suction and discharge connections of the pump. All piping must be properly supported by hangers and not by the pump. PM7 pumps must be supported within 18" of pump suction and discharge connections.

2. Wire the pump motor for the voltage required as specified on the wiring diagram located on the motor nameplate, or in cover of the motor terminal box. All wiring must be in accordance with local regulations. If the motor is damaged due to improper wiring, the guarantee is void.

SECTION – 2
PUMP OPERATION

A. STARTING PUMP

1. Open the suction and discharge valves to the pump. These pumps have a mechanical seal and must NOT be run dry. Open the cock at the top of the pump case to vent out any air.

   NOTE: a. If the pump is above the level of the liquid to be pumped, close the discharge valve. If the pump is below the level of the liquid, open the discharge valve 1½ to 2 turns.

   b. Prime the pump. All air and vapor must be removed. The pump case and suction pipe must be filled with liquid before the pump is started.

2. Rotate the pump shaft by hand (if possible) to be sure the pump is not binding. On some models the end of the motor shaft has a screwdriver slot. It may be used to turn the shaft. A check for sticking of the shaft should also be made after a prolonged pump shutdown.

3. Start the pump and check for correct rotation according to the arrow on the case. If it is running in the

wrong direction on three phase current, change any two leads to the motor. You must disconnect the power before changing the wiring.

4. Lack of capacity and head may indicate the passageways of the pump impeller have become clogged with foreign matter or that the motor speed is low. If speed of the motor is low, the wiring connections at the motor should be checked for miswiring or looseness. If the pump is wired for 460 volt current, but is actually operating on 230 volt current, the motor will never come up to proper speed and may burn out. If low voltage occurs, notify local power company. Slugging of air is another cause of low capacity and head on a closed system. Be sure the system is properly vented of all air — See further notes under Trouble Shooting — Section IV.

WARNING - DO NOT ATTEMPT TO OPERATE PUMP WITH SUCTION VALVE CLOSED!

5. As soon as the pump is up to full speed, slowly open the discharge valve until it is completely open. Do not let the pump run with the discharge valve closed.

6. Check the pressure gages on each side of the strainer in the suction line. A pressure drop across the strainer indicates it is becoming clogged with dirt or scale. In this case, the pump should be shut down and the strainer screen cleaned or replaced. A clogged strainer can cause damage to the pump.

7. The pump should be shut down if motor bearings overheat, if there is undue vibration or noise, or if it fails to develop its rated discharge pressure at operating speed.

B. OPERATING AT REDUCED CAPACITY

If the pump is connected to a constant speed driver or motor, the capacity of the pump can be reduced by throttling the discharge. When throttling the discharge, a by-pass connection may be used to by-pass sufficient liquid back to the suction inlet to prevent overheating.

C. OPERATING ROUTINE

1. Check the bearing temperatures periodically. If there is overheating, check the motor to insure adequate lubrication. Normal inspection consists of periodic checks of motor lubrication.

2. Lubricating the pump motor should be done in accordance with manufacturer's recommendations.

3. Check all seals for leakage.

4. Check the suction and discharge pressure gages. If the differential pressure drops critically, shut down the pump at once.

D. STOPPING

The pump should be shut down rapidly to keep liquid in the pump and to prevent the parts from seizing. After stopping the driver, close the discharge valve and then the inlet valve, in that order. When pumps are operating in parallel, it is sometimes necessary to close the discharge valve immediately after stopping the driver to prevent reverse rotation. If the pumps are to remain idle under freezing conditions, precautions, such as draining the case, should be taken to avoid damage.

SECTION - 3
MAINTENANCE INSTRUCTIONS

A. A5 PUMP DISASSEMBLY AND ASSEMBLY
(Ref. Fig. 5 & 6)

1. Disconnect the power to pump.

2. Close the valves in suction and discharge lines or drain the system.

3. Remove the 8 hex head screws (11) holding the head (7) to the case (1). Disassemble the head (7) from the case (1) by sliding the motor back.

4. Remove the case gasket (5) and clean the gasket surfaces on the case (1) and head (7).

5. Remove the plug covering the shaft end in motor.

6. Hold motor shaft from turning by using a large bladed screwdriver in slot of motor shaft and remove the impeller nut (3) by turning it counter clockwise.

7. Using a screwdriver in the shaft slot remove the impeller (2) and stop washer (4) from shaft by turning it counter clockwise.

8. Remove the head (7) and mechanical seal (6) from the shaft by first removing 4 hex cap screws (10) and then pulling the head (7) from the motor (8).

9. Remove slinger (9) from the shaft.

0. Remove stationary mechanical seal (6a) from the head (7).

11. Clean the motor shaft with solvent and inspect it for the scrapes, gouges and scratches. Lightly polish the shaft if necessary to remove blemishes.

12. Lightly lubricate the O.D. of the stationary member of the new seal. With the seal seat towards the impeller, press the seal firmly into the head recess. Make sure that the seat is level and square.

NOTE: Extreme caution must be exercised not to scratch, gouge or otherwise mar the sealing surface of the mechanical seal or leakage will likely result.

13. Replace the slinger (9) on the shaft.

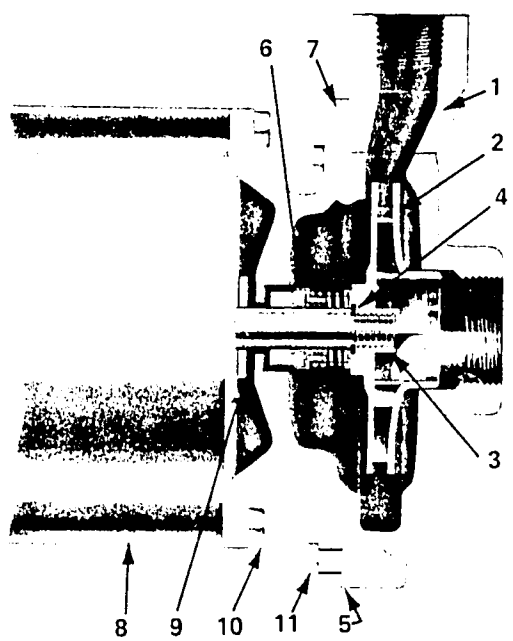

FIGURE 5
A5 PUMP

For Additional Information
On Seal (6)
Refer to Figure 6

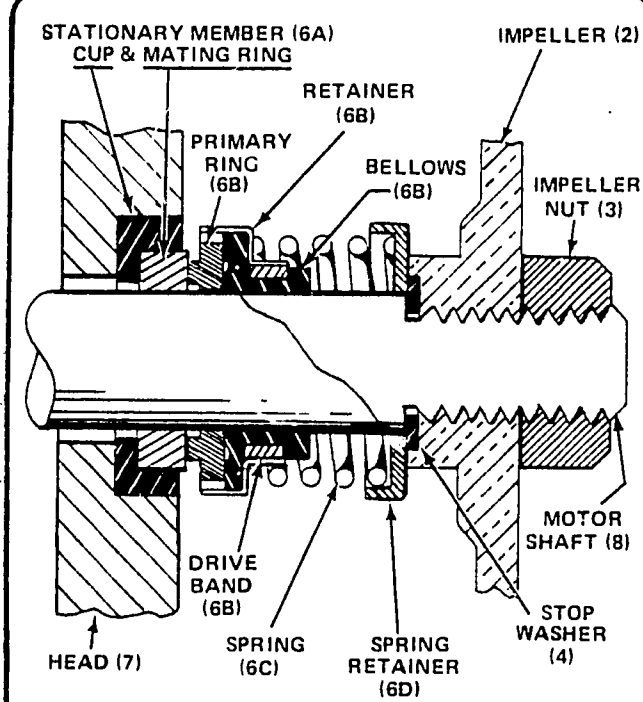

FIGURE 6
MECHANICAL SHAFT SEAL
FOR A5 PUMPS

14. Mount the head (7) on the motor (8) by using four hex head cap screws (10).

15. To assemble mechanical seal rotating element (6) onto the shaft:

    a. Lightly lubricate the I.D. of new seal boot (6B) and slide it over shaft with the carbon seal face towards the stationary seal face until seal faces meet.

    b. Place spring (6C) on the rotating member (seal boot 6B) so it seats properly against the shoulder.

    c. Place spring retainer (6D) against the spring. Be sure the rolled edge faces toward the spring.

16. Replace the stop washer (4) and screw the impeller (2) onto the shaft while holding shaft stationary with screwdriver placed in motor shaft slot. The stop washer has a radius machined on one of the outer diameter edges. The washer is to be assembled with this edge against the impeller. Make sure impeller is snugged up tight. Use a screwdriver to pry the spring retainer (6D) away from the impeller (2) to be sure that the retainer isn't caught between the shaft shoulder and impeller.

17. Replace impeller nut (3), snug nut up tight.

18. Place the gasket (5) on the head (7) and assemble both to the case (1) using 8 hex head cap screws (11).

19. Remount motor to base.

20. Open valves to pump and refill the system and check for leaks.

21. Reconnect power to pump.

B. A9 PUMP SERIES A DISASSEMBLY AND ASSEMBLY (Ref. Fig. 7 & 8)

1. Disconnect the power to pump.

2. Close the valves in suction and discharge lines or drain the system.

3. Remove the 12 hex head screws (13) holding the head (8) to the case (1). Disassemble the head (8) from the case (1) by sliding the motor back.

4. Remove impeller nut (3) by turning it counter clockwise.

5. Remove impeller (2) and its key (4) from the shaft.

6. To remove head (8), mechanical seal (7), gasket (5) and sleeve (11) remove the 4 hex head cap screws (14) and pull the head (8) from motor (9). Caution must be exercised not to scratch, mar or gouge the sleeve during this operation.

7. Remove slinger (10) and shield (12) from shaft.

8. Remove the mechanical seal stationary seat (7a) from the head (8).

9. Remove the gasket (6) from head (8) and clean gasket surfaces on both the case (1) and head (8).

10. Clean motor shaft with solvent.

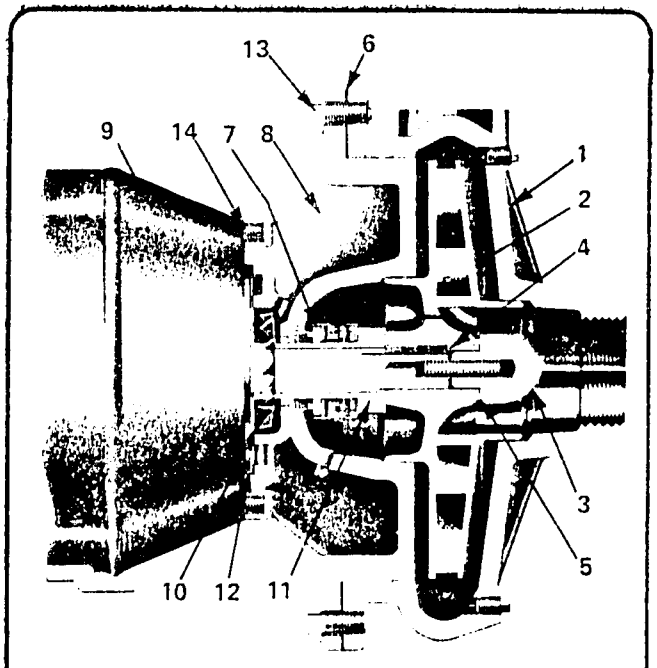

FIGURE 7
A9 PUMP

For Additional Information
On Seal (7)
Refer to Figure 8.

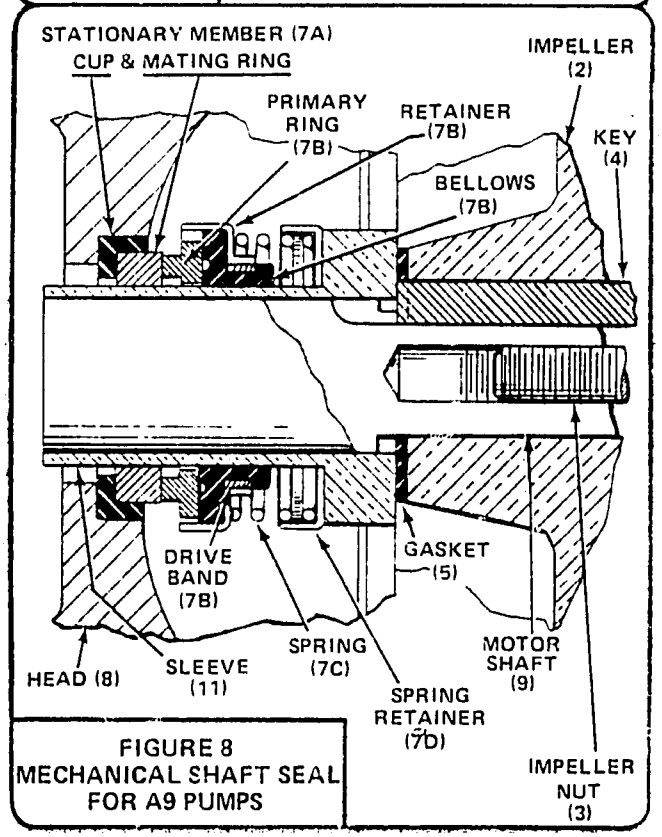

FIGURE 8
MECHANICAL SHAFT SEAL
FOR A9 PUMPS

11. Lightly oil O.D. of new seal stationary seat (7A). With the sealing face towards impeller, press the seal seat firmly into the head recess, being sure the seat is level and square.

Caution: Extreme care must be exercised not to scratch, mar or gouge the sealing face of the stationary seal or leakage will occur.

12. Replace shield (12) and slinger (10) onto shaft.

13. Mount the head (8) to the motor (9) by using 4 hex head cap screws (14).

14. To assemble mechanical-seal-rotating element (7B, C & D) onto the sleeve (11):

    a. Slip spring retainer (7D) over sleeve (11) with the bent edge facing away from the shoulder.

    b. Place spring (7C) over sleeve.

    c. Lightly lubricate i.D. of new seal boot (7B) and slide it over the sleeve with the carbon seal face away from sleeve shoulder.

15. Place a light coat of Teflon paste on I.D. of sleeve and slide it over the shaft until seal faces butt together firmly and squarely.

16. Brush both sides of gasket (5) with Teflon paste and position it on the sleeve (11).

17. Insert key (4) in keyway and replace the impeller (2) on shaft.

18. Place a small amount of Teflon paste on flat side of impeller nut (3) and replace it on the shaft. Turn the impeller to check its alignment.

19. Replace the gasket (6) and assemble the pump head (8) to the pump case (1) using 12 hex head cap screws (13).

20. Remount the motor to base.

21. Open the valves to pump and refill the system and check the pump for leaks.

22. Reconnect power to the pump.

C. A7/PM7 PUMP DISASSEMBLY AND ASSEMBLY (Ref. Fig. 9 & 10) WITH JM FRAME MOTOR

1. Disconnect power to pump.

2. Close the valves in suction and discharge lines or drain the system.

3. (PM7 Only). Remove the seal flush piping line (8 & 9) connected between the head (7) and pump case (11).

4. Remove 8 hex head cap screws (1), holding the head (7) to the case (11) and remove motor head assembly.

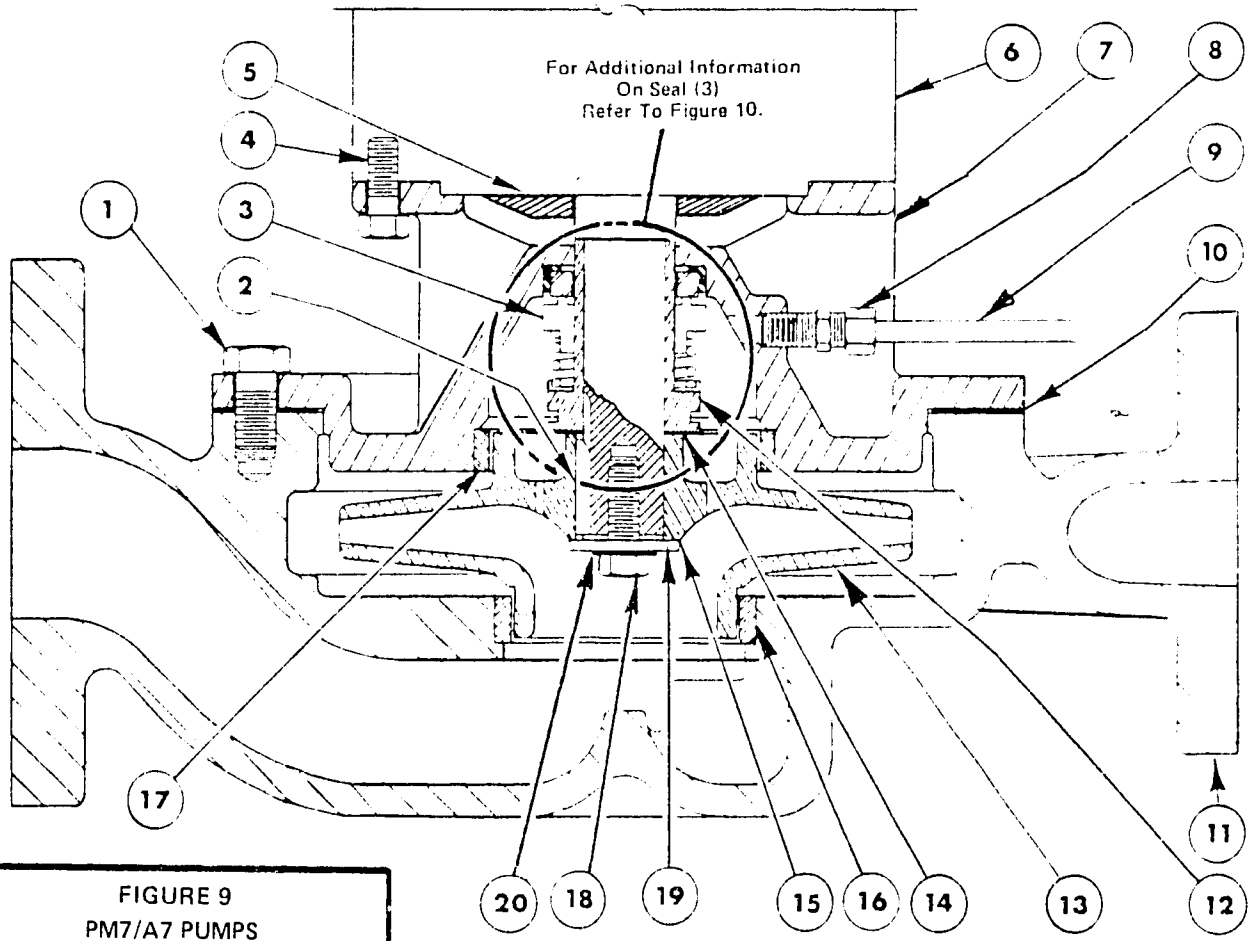

FIGURE 9
PM7/A7 PUMPS

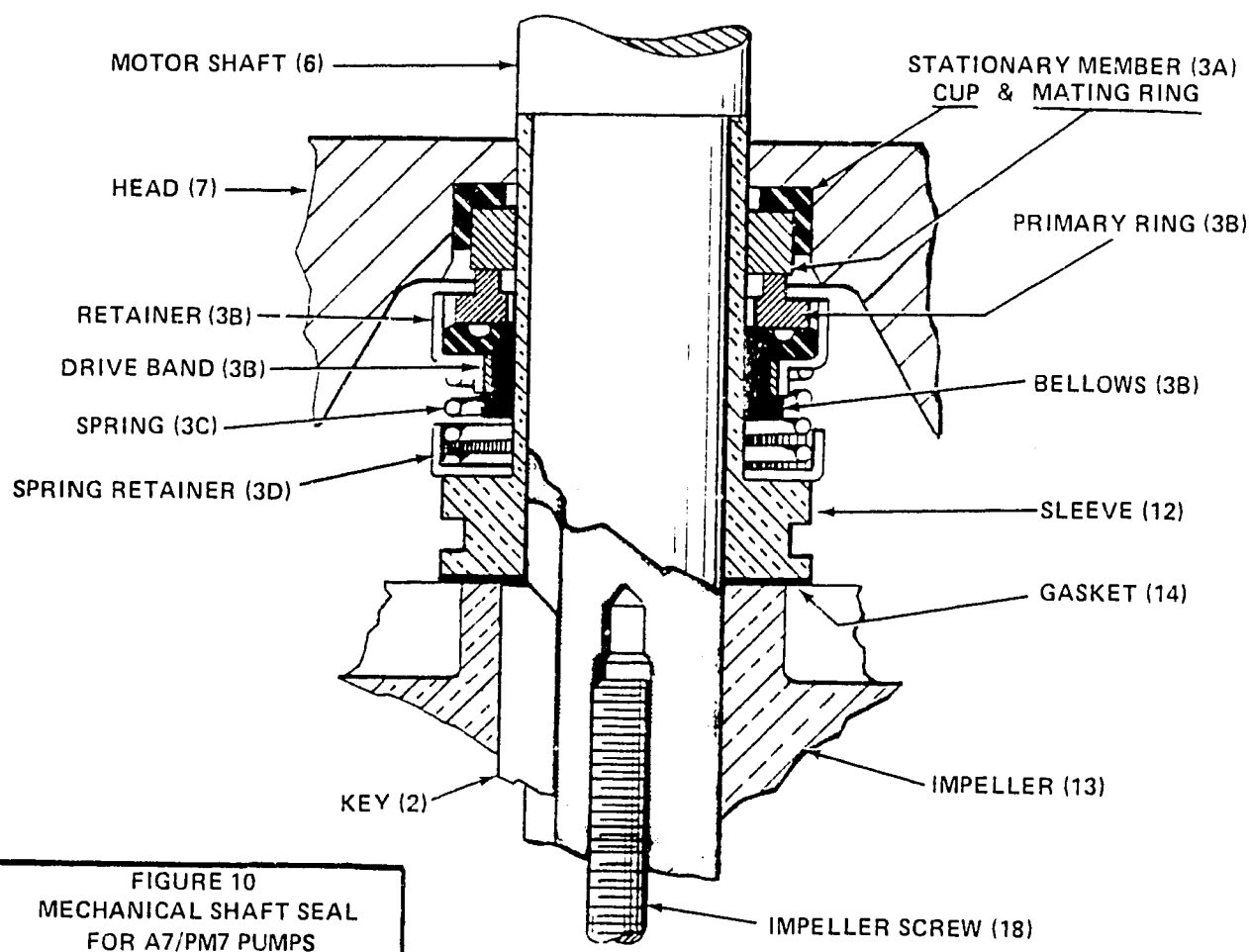

FIGURE 10
MECHANICAL SHAFT SEAL
FOR A7/PM7 PUMPS

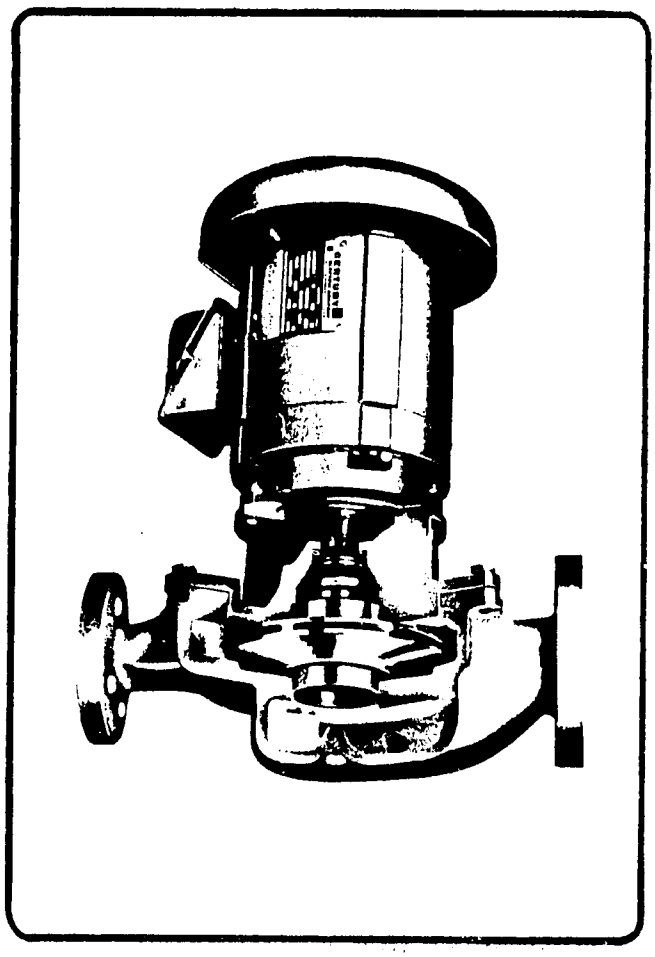

5. Remove the case gasket (10) and clean the gasket surfaces of both the head (7) and case (11).

6. Remove the impeller screw (18) by turning it counter clockwise and remove washers (19) and (20) and the gasket (15). Clean the gasket surfaces.

7. Remove the impeller (13) and its key (2) from the shaft motor.

8. Remove the mechanical seal (3) and sleeve (12) from the shaft. Remove gasket (14) from either the sleeve or impeller and clean the gasket surfaces.

9. Remove head (7) from the motor (6) by removing 4 hex head cap screws (4).

10. Clean the motor shaft with solvent.

11. Remove the stationary member (3A) of the mechanical seal from the head (7).

12. Lightly lubricate the O.D. of new mechanical seal stationary seal (3A) and press it into the recess of the head (7). Be sure that the seal is level and square.

    Caution: Extreme care must be exercised not to scratch, mar or gouge the sealing face of the stationary seal or leakage will occur.

13. Assemble the head (7) onto the motor (6) using 4 hex head cap screws (4).

14. Assemble the rotating seal elements onto the sleeve (12).

    a. Slip spring retainer (3D) over sleeve (12) with the bent edge facing away from the shoulder.

    b. Place spring (3C) over sleeve.

    c. Lightly lubricate I.D. of new seal boot (3B) and slide it over sleeve with the carbon seal face away from sleeve shoulder.

15. Place a light coat of Teflon paste on I.D. of the sleeve and slide it over the shaft until seal faces butt together firmly and squarely.

16. Brush both sides of gasket (14) with Teflon paste and position it on the sleeve (12).

17. Replace key (2) in keyway and slide impeller (13) onto shaft.

18. Brush both sides of gasket (15) with Teflon paste and place on impeller. Place the sealing washer (19) and washer (20) on the impeller cap screw (18) and tighten onto the shaft.

19. Place gasket (10) on head (7) and assemble it to the case (11) using 9 hex head cap screws (1).

20. Replace the seal flush piping (8 & 9).

21. Open the valves to the pump or refill system and check pump for leaks.

22. Reconnect power to pump and check again for leaks.

D. A7A/PM7A PUMP DISASSEMBLY AND ASSEMBLY (Ref. Fig. 11 & 12) WITH JET PUMP MOTOR

1. Disconnect power to pump

2. Close the valves in the suction and discharge piping or drain the system.

3. (PM7A Only) Remove the seal flush piping line (8 & 9) between the head (7) and case (11).

4. Remove 8 hex head cap screws (1) holding the head (7) to case (11) and remove the motor-head assembly.

5. Remove the case gasket (10) and clean the gasket surfaces of both the head (7) and the case (11).

6. Remove the impeller (12) and the impeller nut (15) by turning counter clockwise. Remove the impeller nut (15) from the impeller (12).

7. Remove loose mechanical seal parts from shaft.

8. Loosen 4 hex screws (4) between the motor and head and remove the retainer clips (3). Remove head (7) from motor (6).

9. Remove slinger (5) from the motor shaft and clean shaft with a solvent. Inspect it for scratches and lightly polish it if necessary to remove blemishes.

10. Remove mechanical stationary seal (2A) from head (7).

11. Lightly lubricate the O.D. of a new mechanical stationary seal (2A) and press into recess of head (7) making sure that the seal is level and square.

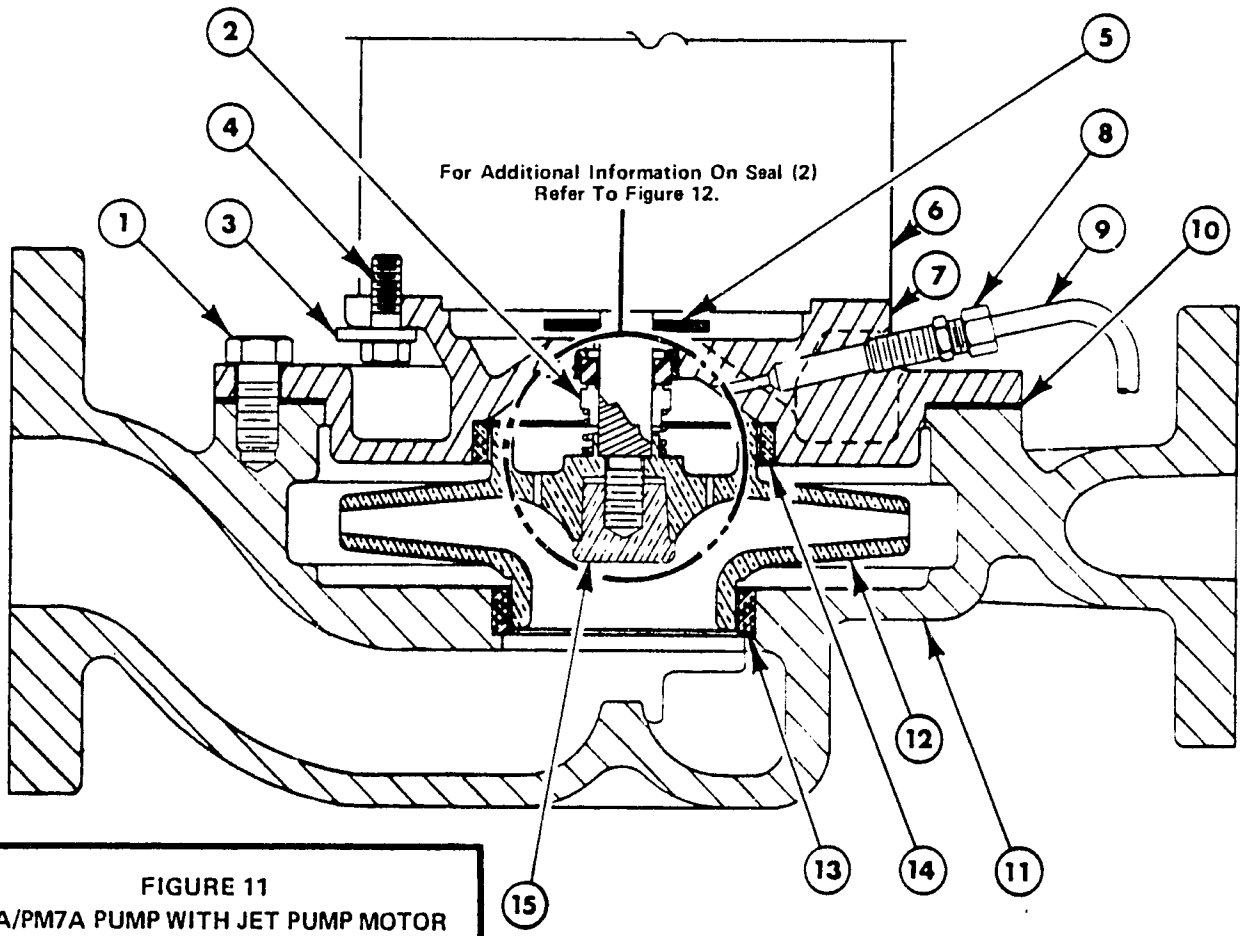

FIGURE 11
A7A/PM7A PUMP WITH JET PUMP MOTOR

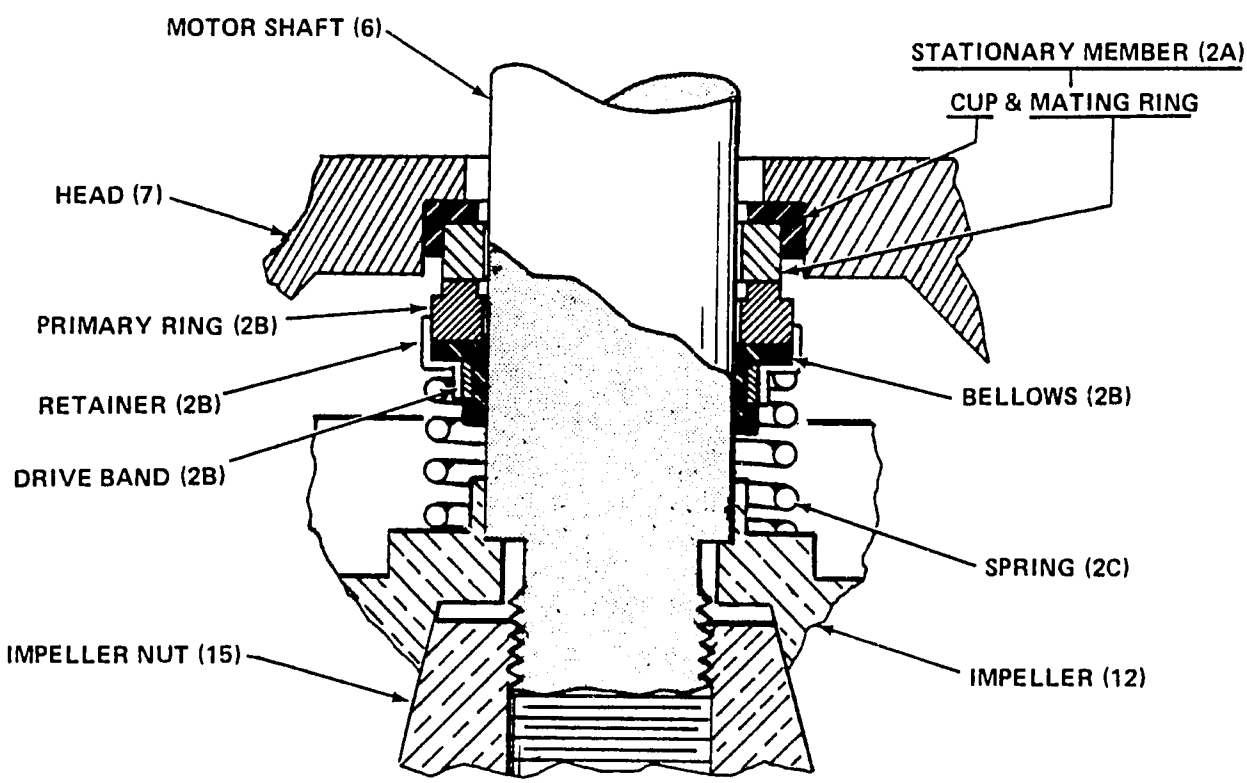

FIGURE 12
MECHANICAL SHAFT SEAL
FOR A7A/PM7A PUMPS

11. (Continued)

Caution: Extreme care must be exercised not to scratch, mar or gouge the face of the stationary seal as seal leakage will result.

12. Replace slinger (5) on the shaft and assemble the head (7) to the motor (6) by replacing the 4 retainer clips (3) on shank of cap screws (4). Tighten the cap screws.

13. Assemble rotating seal elements onto shaft.
    a. Lightly lubricate the I.D. of new seal boot (2B) and slide it over the shaft with the carbon seal face towards the stationary seal face.
    b. Place spring (2C) over shaft.

14. Replace impeller (12). Be sure the spring (2C) is seated properly against the impeller face.

15. Replace the impeller nut (15) and torque it to 15 lbs.

16. Place the gasket (10) on head (7) and assemble it to the case (11) using 8 hex head screws.

17. Replace the seal flush line (8 and 9).

18. Open valves to the pump and refill the system. Check the pump for leaks.

19. Reconnect power to pump and check again for leaks.

SECTION IV - TROUBLE SHOOTING

Operating troubles and their probable causes are as follows:

A. INSUFFICIENT OR NO DISCHARGE

1. Wrong direction of rotation.
2. Pump not primed.
3. Suction line is not full of liquid.
4. Air or vapor in suction line.
5. Suction pipe not submerged enough.
6. Available NPSH not sufficient.
7. Pump not up to rated speed.
8. Too much system head.

B. INSUFFICIENT PRESSURE

1. Wrong direction of rotation.
2. Suction line not full of liquid.
3. Air or vapor in liquid.
4. Air leaks in suction line.

B. INSUFFICIENT PRESSURE (Continued)

5. Suction line not submerged enough.
6. Available NPSH not sufficient.
7. Pump not up to rated speed.
8. Mechanical defects:
    a. Impeller damaged.
    b. Internal leakage (clearances).

C. CAVITATION AND NOISE

1. Air or gas in liquid.
2. Suction line not filled with liquid.
3. Suction line not submerged enough.
4. Available NPSH not sufficient.

D. PUMP LOSES SUCTION AFTER STARTING

1. Suction line not full of liquid.
2. Air leaks in suction line.
3. Air or vapor in liquid.
4. Air or vapor in suction line.
5. Suction line not submerged enough.
6. Available NPSH not sufficient.

E. EXCESSIVE POWER CONSUMPTION

1. Speed too high
2. Insufficient head.
3. Mechanical Defects:
    a. Shaft bent.
    b. Rotating element dragging.
    c. Piping improperly supported.

F. VIBRATION

1. Suction line not full of liquid.
2. Air or vapor in suction line.
3. Worn or loose motor bearings.
4. Rotating element out of balance.
5. Shaft bent.
6. Foundation not rigid.
7. Vibration in the driver.
8. Wrong location of control valve.
9. Piping improperly supported.

NOMENCLATURE

10 HP - 2½ - A9 - D 65 S - 2 - A

- **10 HP** — HORSEPOWER
- **2½** — DISCHARGE (IN INCHES)
- **A9** — TYPE MODEL
- **D** — IMPELLER STYLE
- **65** — IMPELLER DIAMETER
  - **6** — INCHES (6")
  - **5** — EIGHTS OF AN INCH (5/8")
  - TOTAL — 6-5/8 INCHES
- **S** — STANDARD IMPELLER
- **2** — RPM: 1 - 1750; 2 - 3450
- **A** — SERIES

ORDERING PROCEDURE

1. Complete part number and description is required when ordering.
2. When a part number is not known or shown in the parts catalog, the complete model and serial number of the unit on which the part is to be used must be given.
3. Send all orders to:

   DUNHAM-BUSH, INC., PARTS DEPT.
   811 E. MAIN ST.
   MARSHALLTOWN, IOWA, 50158

4. Prices can be found in the latest revision of Form 17448 and are for one item or kit as applicable.
5. Minimum billing is $25.00.
6. All prices are subject to federal, state, local or other taxes which may be applicable.
7. All orders requiring **special handling** will have a surcharge of $25.00 or the actual cost of this requirement whichever is greater.
8. Dunham-Bush reserves the right to substitute parts if they are interchangeable with those ordered. The invoice will reflect the cost of the actual part shipped.
9. Refer to the latest revision of Form 1278 for terms of sale.

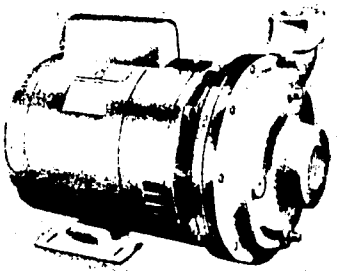

TYPE A5 PUMP

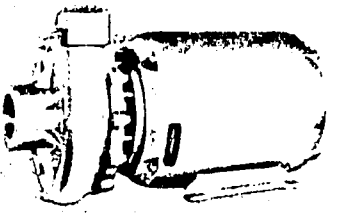

TYPE A9 PUMP

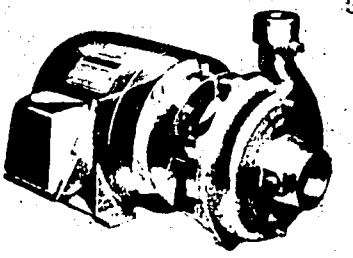

TYPE A7A AND A7 PUMPS

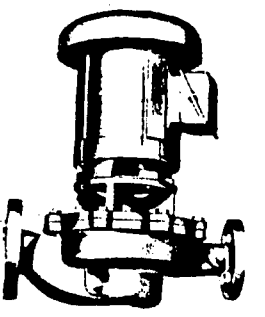

TYPE PM7 AND PM7A PUMPS

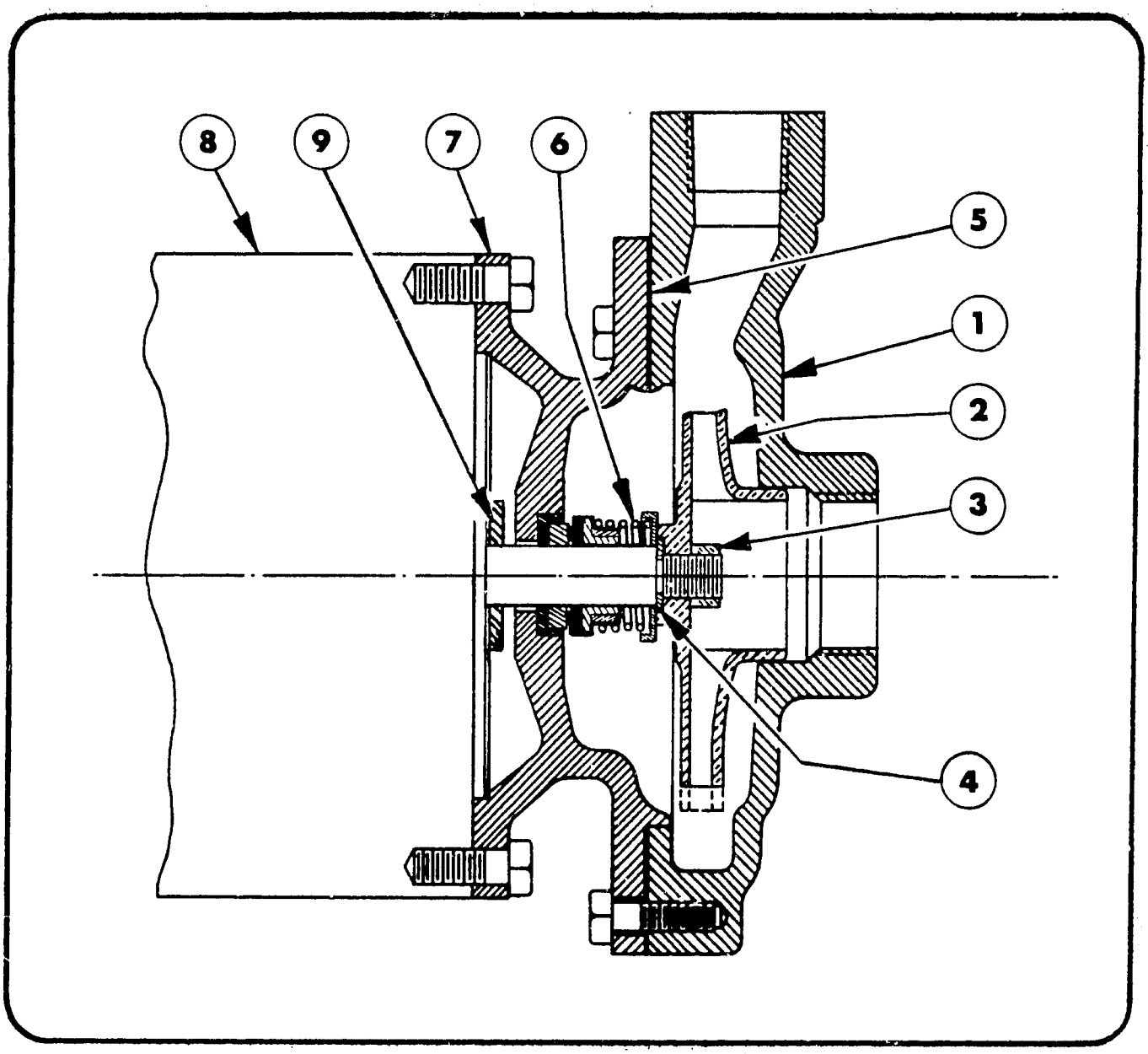

A5 PUMP AND PARTS LIST

1/3 HP, 1/2 HP AND 3/4 HP

	PART NUMBER AND DESCRIPTION	1/3 HP 1" 1φ & 3φ A5C2	1/3 HP 1 1/2" 1φ & 3φ A5C2	1/2 HP 1" 1φ & 3φ A5C2	1/2 HP 1 1/2" 1φ & 3φ A5C2	3/4 HP 3/4" 1φ & 3φ A5C2	3/4 HP 1 1/2" 1φ & 3φ A5C2
1	CASE (CAST IRON) CASE (BRONZE)	E6046 E6078	E6048 E6080	E6045 E6078	E6048 E6080	E6041 E6077	E6048 E6080
2	IMPELLER	D5197x 3 15/16"	D5203x 3 1/4"	D5197x 4 5/16"	D5203x 3 5/8"	D5193x 4 5/16"	D5203x 4 3/32"
3	NUT - IMPELLER	P-116	P-116	P-116	P-116	P-116	P-116
4	WASHER	C8709	C8709	C8709	C8709	C8709	C8709
5	GASKET-CASE *	D5352	D5352	D5352	D5352	D5352	D5352
6	SEAL-SHAFT *	472	472	472	472	472	472
7	HEAD (CAST IRON) HEAD (BRONZE)	E6042 E6081	E6042 E6081	E6042 E6081	E6042 E6081	E6042 E6081	E6042 E6081
8	MOTOR	Contact Dunham-Bush, Inc., Marshalltown, Iowa					
9	SLINGER	C8854	C8854	C8854	C8854	C8854	C8854

NOTES:
1. NON-STANDARD pump parts are not shown. When ordering repair parts, refer to page 10 of this catalog.
2. * = These parts are required when replacing shaft seal.

985

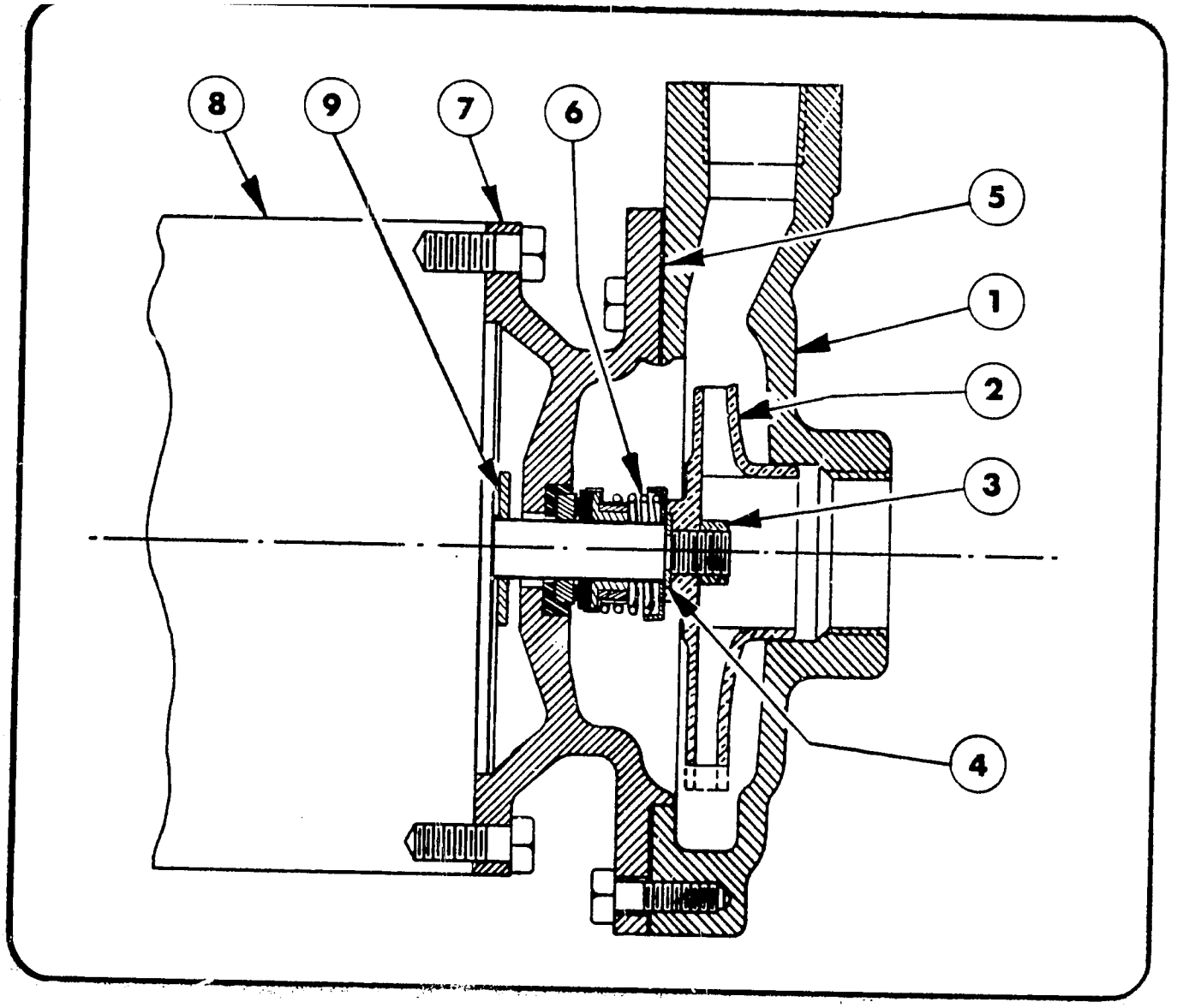

A5 PUMP AND PARTS LIST

1 HP, 1½ HP AND 2 HP

PART NUMBER AND DESCRIPTION	1 HP ¾" 1φ & 3φ A5A2	1 HP 1½" 1φ & 3φ A5C2	1½ HP ¾" 1φ & 3φ A5A2	1½ HP 1¼" 1φ & 3φ A5B2	2 HP 1" 1φ & 3φ A5A2	2 HP 1¼" 1φ & 3φ A5B2	2 HP 1½" 1φ & 3φ A5B2
1 CASE (CAST IRON) CASE (BRONZE)	E6041 E6077	E6048 E6080	E6041 E6077	E6047 E6079	E6046 E6078	E6047 E6079	E6048 E6080
2 IMPELLER	D5193x 4 9/16"	D5203x 4 5/16"	D5193x 5"	D5199x 4 1/8"	D5195x 4 1/2"	D5199x 4 1/2"	D5202x 4 1/8"
3 NUT–IMPELLER	P-116	P-116	P-116	P-116	P-116	P-116	P-116
4 WASHER	C8709	C8709	C8709	C8709	C8709	C8709	C8709
5 GASKET–CASE *	D5352	D5352	D5352	D5352	D5352	D5352	D5352
6 SEAL–SHAFT *	472	472	472	472	472	472	472
7 HEAD (CAST IRON) HEAD (BRONZE)	E6042 E6081	E6042 E6081	E6042 E6081	E6042 E6081	E6042 E6081	E6042 E6081	E6042 E6081
8 MOTOR	Contact Dunham-Bush, Inc., Marshalltown, Iowa						
9 SLINGER	C8854	C8854	C8854	C8854	C8854	C8854	C8854

NOTES: 1. NON-STANDARD pump parts are not shown. When ordering repair parts, refer to page 10 of this catalog.
2. * = These parts are required when replacing shaft seal.

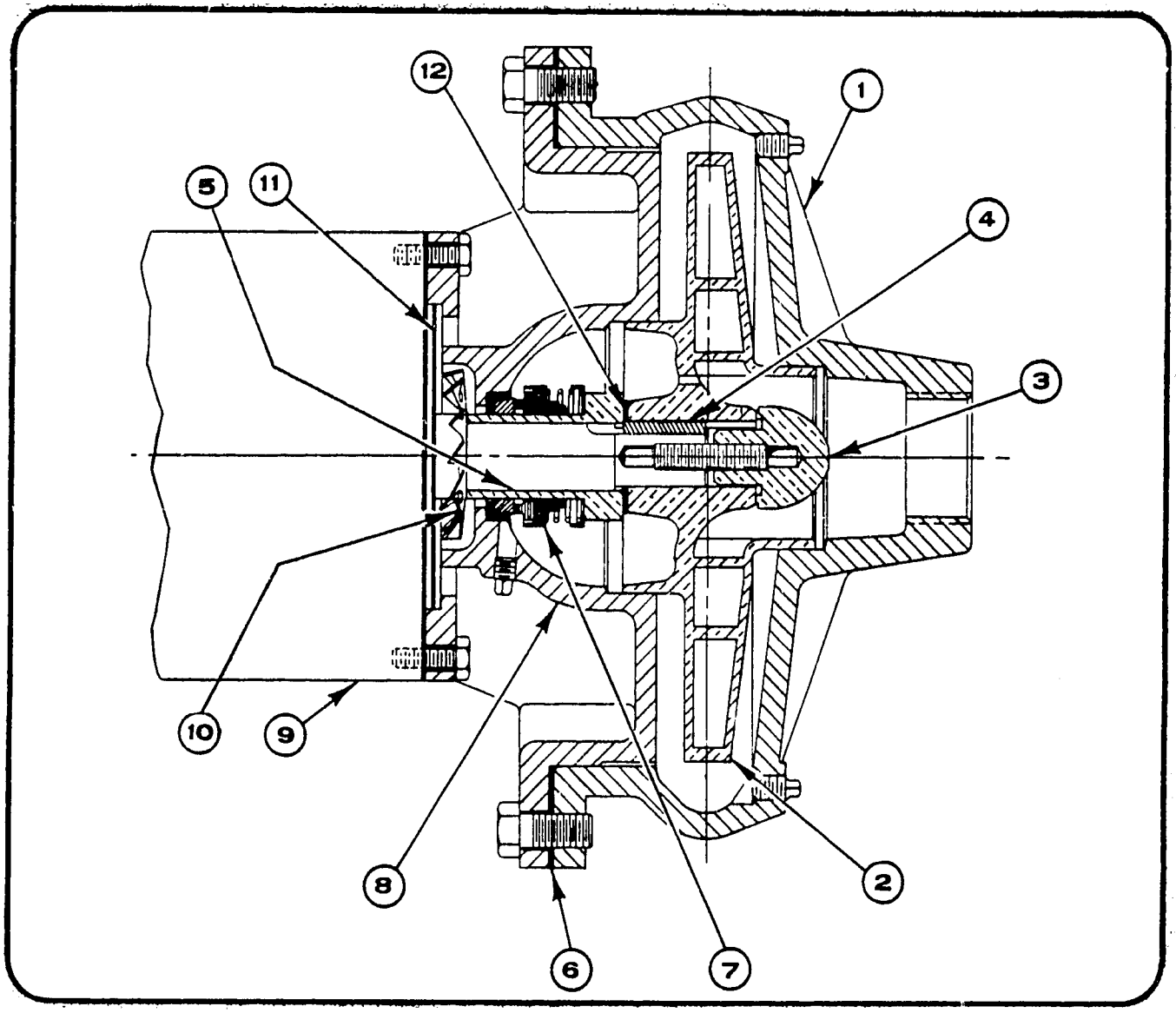

A9 PUMP AND PARTS LIST
SERIES A - ½ HP, ¾ HP AND 1 HP

PART NUMBER AND DESCRIPTION		½ HP 1" 1ϕ & 3ϕ A9C1A	¾ HP 1" 1ϕ & 3ϕ A9C1A	¾ HP 1¼" 1ϕ & 3ϕ A9D1A	1 HP 1" 1ϕ & 3ϕ A9C1A	1 HP 1¼" 1ϕ & 3ϕ A9D1A	1 HP 2" 1ϕ & 3ϕ A9D1A
1	CASE (CAST IRON) CASE (BRONZE)	F541 D2-76	F541 D2-76	F540 D2-74	F541 D2-76	F540 D2-74	F544 D2-80
2	IMPELLER (BRONZE)	C2-3211X 6 1/16"	C2-3211X 6 3/4"	C2-3213X 4 15/16"	C2-3211X 7 5/16"	C2-3213X 5 15/16"	C2-3214X 5 3/8
3	STUD & NUT ASSEMBLY	C10035 A2-3898	C10035 A2-3898	C10035 A2-3898	C10035 A2-3898	C10035 A2-3898	C10035 A2-3898
4	KEY	C7763	C7763	C7763	C7763	C7763	C7763
5	SLEEVE *	A2-3905	A2-3905	A2-3905	A2-3905	A2-3905	A2-3905
6	GASKET *	D5450	D5450	D5450	D5450	D5450	D5450
7	SHAFT SEAL *	3179	3179	3179	3179	3179	3179
8	HEAD (CAST IRON) HEAD (BRONZE)	D2-1478 D2-1480	D2-1478 D2-1480	D2-1478 D2-1480	D2-1478 D2-1480	D2-1478 D2-1480	D2-1478 D2-1480
9	MOTOR	Contact Dunham-Bush, Inc., Marshalltown, Iowa					
10	SLINGER	C10038	C10038	C10038	C10038	C10038	C10038
11	SHIELD	C8958	C8958	C8958	C8958	C8958	C8958
12	GASKET *	A2-3020	A2-3020	A2-3020	A2-3020	A2-3020	A2-3020

NOTES: 1. NON-STANDARD pump parts are not shown. When ordering repair parts, refer to page 10 of this catalog.
2. * = These parts are required when replacing shaft seal.

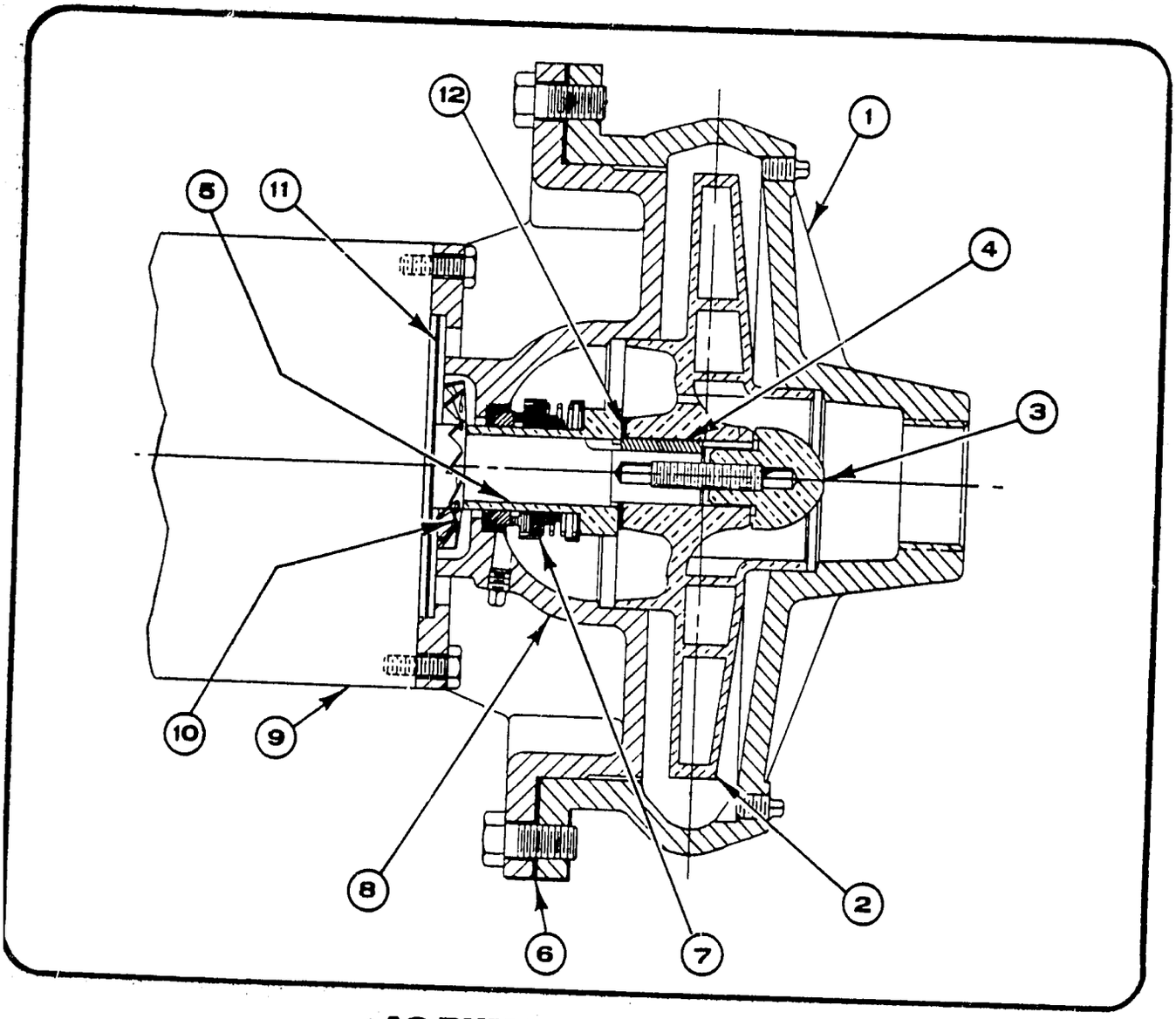

A9 PUMP AND PARTS LIST
SERIES A – 1½ HP

PART NUMBER AND DESCRIPTION	1½ HP 1" 1φ & 3φ A9C1A	1½ HP 1¼" 1φ & 3φ A9D1A	1½ HP 2" 1φ & 3φ A9D1A	1½ HP 2½" 1φ & 3φ A9D1A
1 CASE (CAST IRON) CASE (BRONZE)	D541 D2-76	F540 D2-74	F544 D2-80	F545 D2-79
2 IMPELLER (BRONZE)	C2-3211X $8^{7}/_{16}$"	C2-3213X $6^{3}/_{8}$"	C2-3214X $5^{29}/_{32}$"	C2-3215X $5^{21}/_{33}$"
3 STUD & NUT ASSEMBLY	C10035 A2-3898	C10035 A2-3898	C10035 A2-3898	C10035 A2-3898
4 KEY	C7763	C7763	C7763	C7763
5 SLEEVE *	A2-3905	A2-3905	A2-3905	A2-3905
6 GASKET *	D5450	D5450	D5450	D5450
7 SHAFT SEAL *	3179	3179	3179	3179
8 HEAD (CAST IRON) HEAD (BRONZE)	D2-1478 D2-1480	D2-1478 D2-1480	D2-1478 D2-1479	D2-1478 D2-1480
9 MOTOR	Contact Dunham-Bush, Inc., Marshalltown, Iowa			
10 SLINGER	C10038	C10038	C10038	C10038
11 SHIELD	C8958	C8958	C8958	C8958
12 GASKET *	A2-3020	A2-3020	A2-3020	A2-3020

NOTES:
1. NON-STANDARD pump parts are not shown. When ordering repair parts, refer to page 10 of this catalog.
2. * = These parts are required when replacing shaft seal.

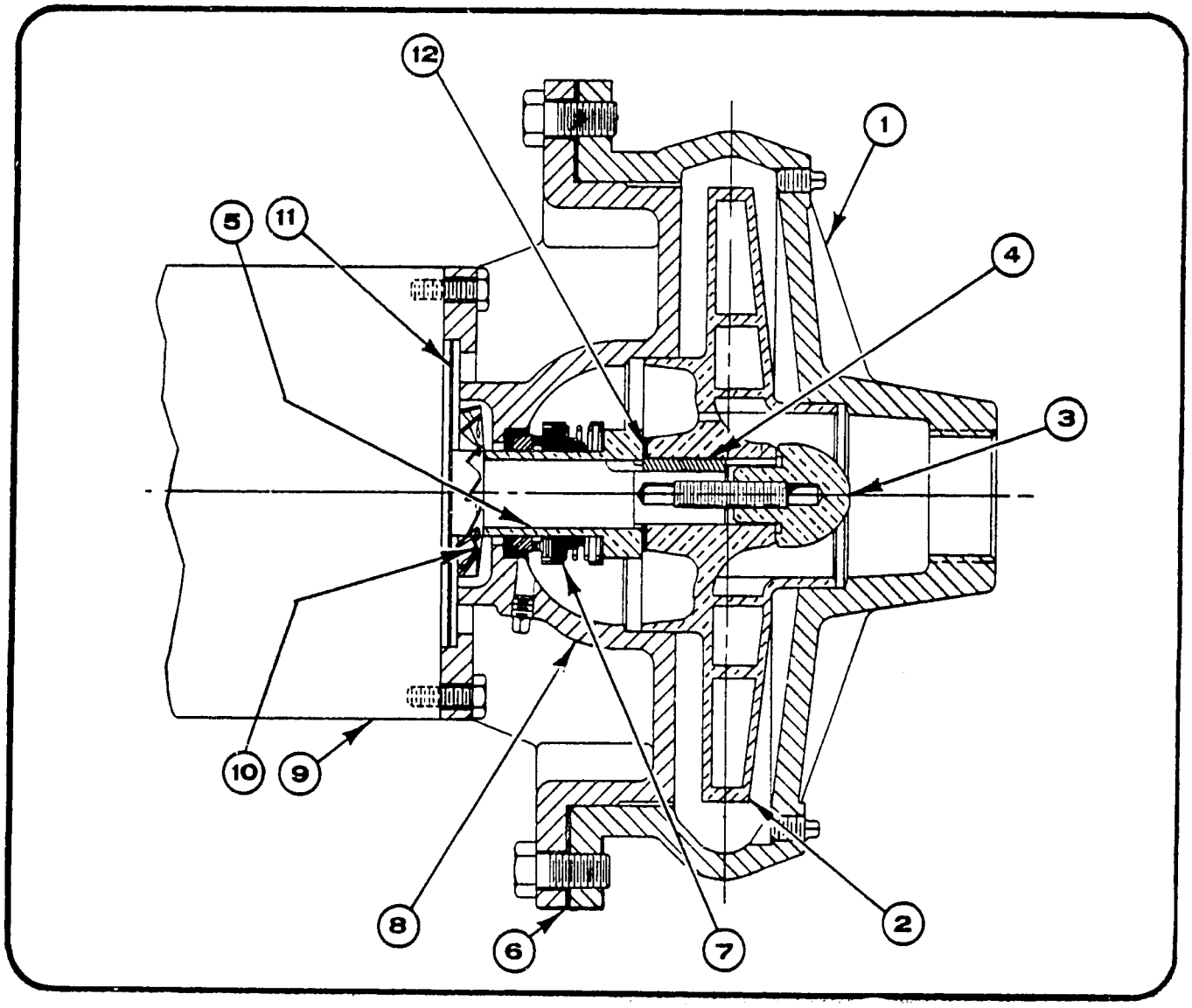

A9 PUMP AND PARTS LIST
SERIES A – 2 HP

PART NUMBER AND DESCRIPTION	2 HP 1" 1φ A9C1A	2 HP 1" 3φ A9C1A	2 HP 1¼" 1φ A9D1A	2 HP 1¼" 3φ A9D1A	2 HP 2" 1φ D9D1A	2 HP 2" 3φ A9D1A	2 HP 2½" 1φ A9D1A	2 HP 2½" 3φ A9D1A
1 CASE (CAST IRON) CASE (BRONZE)	F541 D2-76	F541 D2-76	F540 D2-74	F540 D2-74	F544 D2-80	F544 D2-80	F545 D2-79	F545 D2-79
2 IMPELLER (BRONZE)	C2-3211X 9"	C2-3211X 9"	C2-3213X $7^3/_{16}$"	C2-3213X $7^3/_{16}$"	C2-3214X $6^1/_2$"	C2-3214X $6^1/_2$"	C2-3215X $6^1/_8$"	C2-3215X $6^1/_8$"
3 STUD & NUT ASSEMBLY	C10035 A2-3898	C10035 A2-3898	C10035 A2-3898	C10035 A2-3898	C10035 A2-3898	C10035 A2-3898	C10035 A2-3898	C10035 A2-3898
4 KEY	C7763	C7763	C7763	C7763	C7763	C7763	C7763	C7763
5 SLEEVE *	A2-3905	A2-3905	A2-3905	A2-3905	A2-3905	A2-3905	A2-3905	A2-3905
6 GASKET *	D5450	D5450	D5450	D5450	D5450	D5450	D5450	D5450
7 SHAFT SEAL *	3179	3179	3179	3179	3179	3179	3179	3179
8 HEAD (CAST IRON) HEAD (BRONZE)	D2-1478 D2-1480	D2-1478 D2-1480	D2-1478 D2-1480	D2-1478 D2-1480	D2-1478 D2-1480	D2-1478 D2-1480	D2-1478 D2-1480	D2-1478 D2-1480
9 MOTOR	Contact Dunham-Bush, Inc., Marshalltown, Iowa							
10 SLINGER	C10038	C10038	C10038	C10038	C10038	C10038	C10038	C10038
11 SHIELD	C8958	C8958	C8958	C8958	C8958	C8958	C8958	C8958
12 GASKET *	A2-3020	A2-3020	A2-3020	A2-3020	A2-3020	A2-3020	A2-3020	A2-3020

NOTES:
1. NON-STANDARD pump parts are not shown. When ordering repair parts, refer to page 10 of this catalog.
2. * = These parts are required when replacing shaft seal.

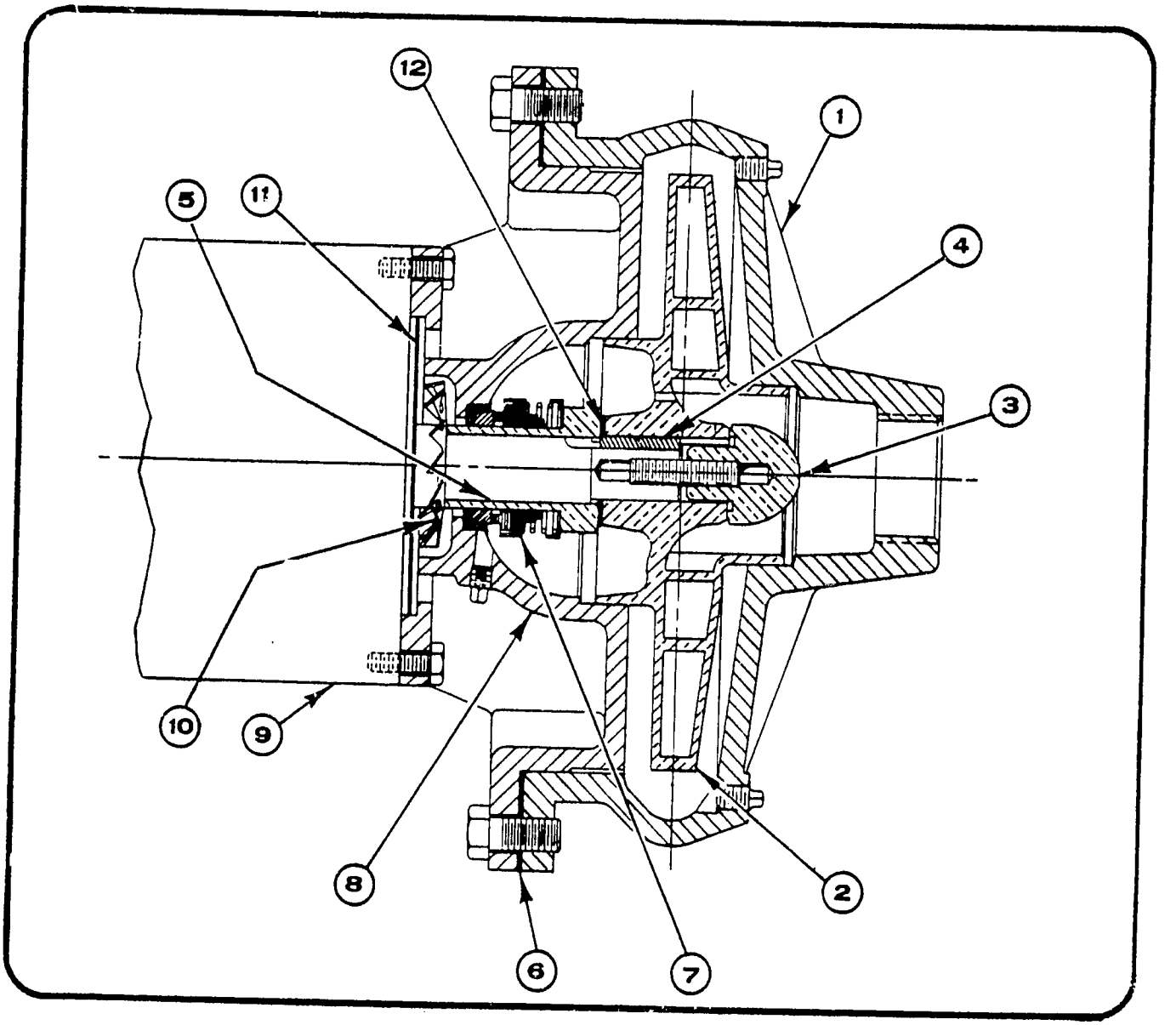

A9 PUMP AND PARTS LIST SERIES A – 3 HP

PART NUMBER AND DESCRIPTION	3 HP 1" 3ϕ A9D2A	3 HP 1" 3ϕ A9C2A	3 HP 1¼" 3ϕ A9D1A	3 HP 1¼" 3ϕ A9D2A	3 HP 2" 3ϕ A9D1A	3 HP 2½" 3ϕ A9D1A
1 CASE (CAST IRON) CASE (BRONZE)	F541 D2-76	F541 D2-76	F540 D2-74	F540 D2-74	F544 D2-80	F545 D2-79
2 IMPELLER (BRONZE)	C2-3212X 5 1/4"	C2-3211X 6 1/16"	C2-3213X 8 1/4"	C2-3213X 4 7/16"	C2-3214X 7 1/16"	C2-3215X 6 3/4"
3 STUD & NUT ASSEMBLY	C10035 A2-3898	C10035 A2-3898	C10035 A2-3898	C10035 A2-3898	C10035 A2-3898	C10035 A2-3898
4 KEY	C7763	C7763	C7763	C7763	C7763	C7763
5 SLEEVE *	A2-3905	A2-3905	A2-3905	A2-3905	A2-3905	A2-3905
6 GASKET *	D5450	D5450	D5450	D5450	D5450	D5450
7 SHAFT SEAL *	3179	3179	3179	3179	3179	3179
8 HEAD (CAST IRON) HEAD (BRONZE)	D2-1478 D2-1480	D2-1478 D2-1480	D2-1478 D2-1480	D2-1478 D2-1480	D2-1478 D2-1480	D2-1478 D2-1480
9 MOTOR	Contact Dunham-Bush, Inc., Marshalltown, Iowa					
10 SLINGER	C10038	C10038	C10038	C10038	C10038	C10038
11 SHIELD	C8958	C8958	C8958	C8958	C8958	C8958
12 GASKET *	A2-3020	A2-3020	A2-3020	A2-3020	A2-3020	A2-3020

NOTES: 1. NON-STANDARD pump parts are not shown. When ordering repair parts, refer to page 10 of this catalog.
2. * = These parts are required when replacing shaft seal.

990

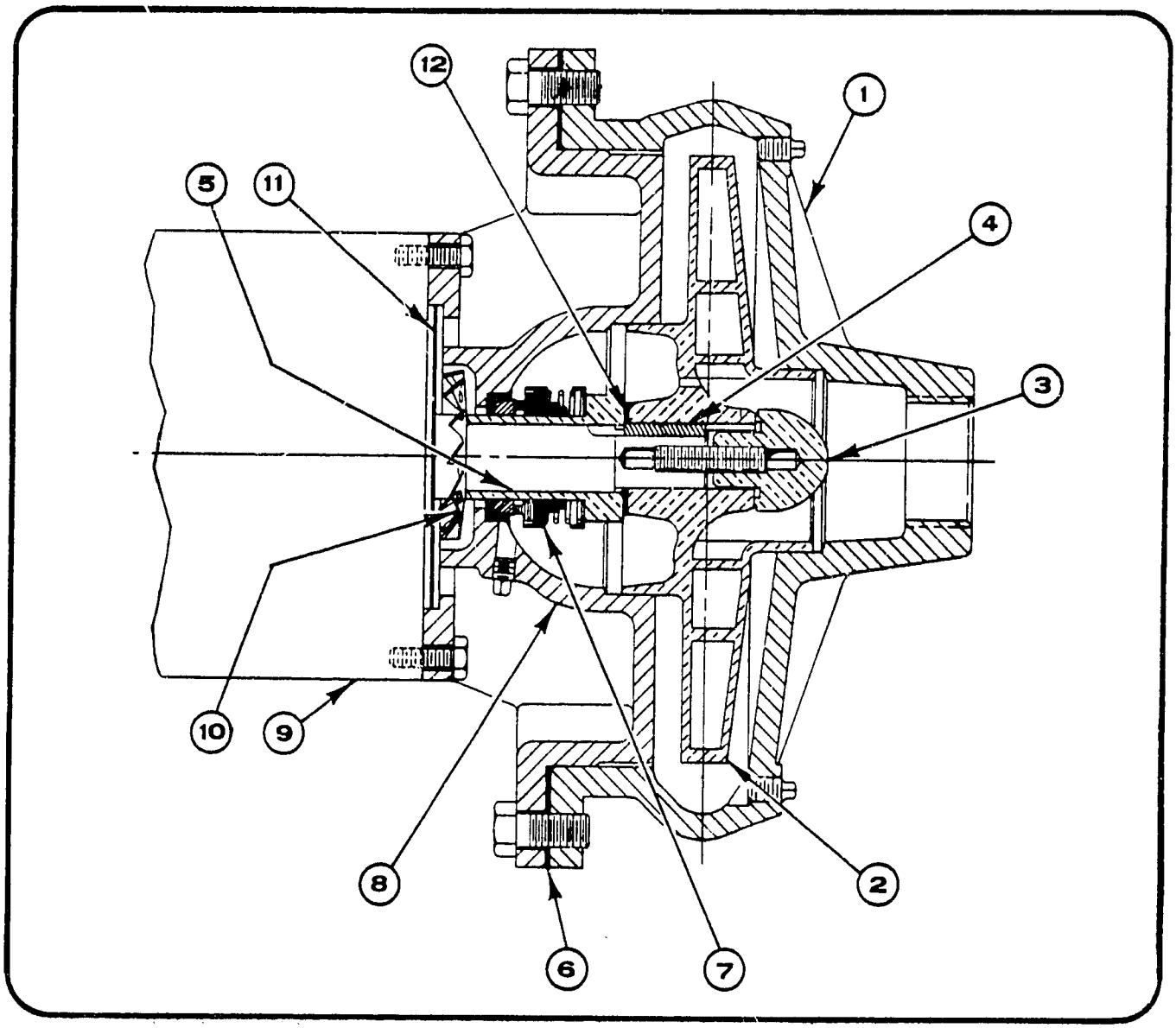

A9 PUMP AND PARTS LIST SERIES A - 5 HP

PART NUMBER AND DESCRIPTION	5 HP 1" 3ϕ A9C2A	5 HP 1" 3ϕ A9D2A	5 HP 1¼" 3ϕ A9D2A	5 HP 2" 3ϕ A9D1A	5 HP 2" 3ϕ A9D2A	5 HP 2½" 3ϕ A9D1A	5 HP 2½" 3ϕ A9D2A
1 CASE (CAST IRON) CASE (BRONZE)	F541 D2-76	F541 D2-76	F540 D2-74	F544 D2-80	F544 D2-80	F545 D2-79	F545 D2-79
2 IMPELLER (BRONZE)	C2-3211X $6^{9}/_{16}$"	C2-3212X $5^{7}/_{8}$"	C2-3213X $5^{15}/_{32}$"	C2-3214X $8^{7}/_{16}$"	C2-3214X $4^{15}/_{16}$"	C2-3215X $7^{15}/_{16}$"	C2-3215X $4^{3}/_{4}$"
3 STUD & NUT ASSEMBLY	C10035 A2-3898	C10035 A2-3898	C10035 A2-3898	C10035 A2-3899	C10035 A2-3899	C10035 A2-3899	C10035 A2-3899
4 KEY	C7763	C7763	C7763	C7763	C7763	C7763	C7763
5 SLEEVE *	A2-3905	A2-3905	A2-3905	A2-3905	A2-3905	A2-3905	A2-3905
6 GASKET *	D5450	D5450	D5450	D5450	D5450	D5450	D5450
7 SHAFT SEAL*	3179	3179	3179	3179	3179	3179	3179
8 HEAD (CAST IRON) HEAD (BRONZE)	D2-1478 D2-1480	D2-1478 D2-1480	D2-1478 D2-1480	D2-1478 D2-1480	D2-1478 D2-1480	D2-1478 D2-1480	D2-1478 D2-1480
9 MOTOR	Contact Dunham-Bush, Inc., Marshalltown, Iowa						
10 SLINGER	C10038	C10038	C10038	C10038	C10038	C10038	C10038
11 SHIELD	C8958	C8958	C8958	C8958	C8958	C8958	C8958
12 GASKET *	A2-3020	A2-3020	A2-3020	A2-3020	A2-3020	A2-3020	A2-3020

NOTES: 1. NON-STANDARD pump parts are not shown. When ordering repair parts, refer to page 10 of this catalog.
2. * = These parts are required when replacing shaft seal.

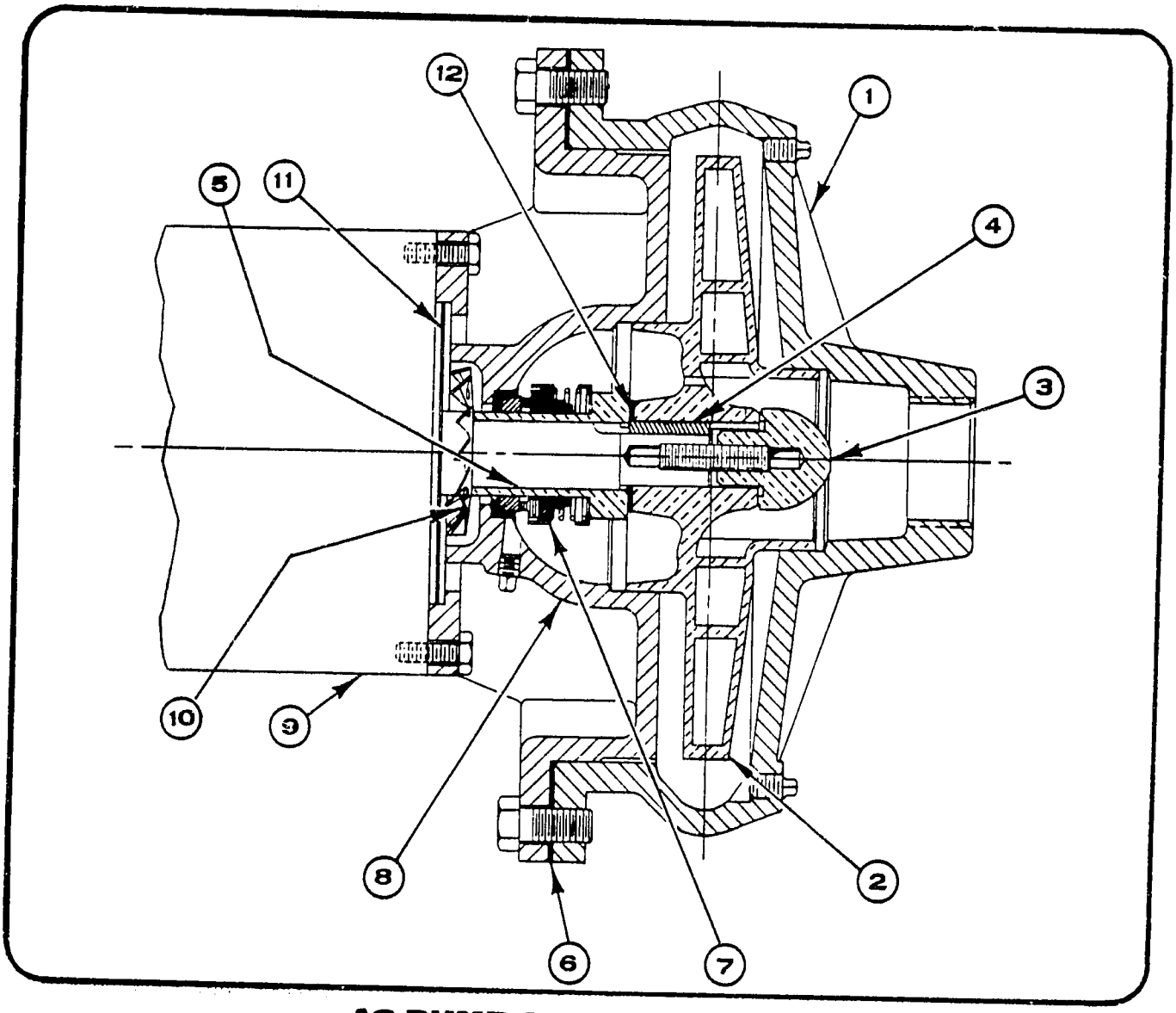

A9 PUMP AND PARTS LIST
SERIES A - 7½ HP

PART NUMBER AND DESCRIPTION	7½ HP 1¼" 3ϕ A9D2A	7½ HP 2" 3ϕ A9D2A	7½ HP 2½" 3ϕ A9D1A	7½ HP 2½" 3ϕ A9D1A
1 CASE (CAST IRON) CASE (BRONZE)	F540 D2-74	F544 D2-80	F545 D2-79	F545 D2-79
2 IMPELLER (BRONZE)	C2-3213X 5 15/16"	C2-3214X 5 9/16"	C2-3215X 9"	C2-3215X 5 5/16"
3 STUD & NUT ASSEMBLY	C10035 A2-3899	C10035 A2-3899	C10035 A2-3899	C10035 A2-3899
4 KEY	C7763	C7763	C7763	C7763
5 SLEEVE *	A2-3905	A2-3905	A2-3905	A2-3905
6 GASKET *	D5450	D5450	D5450	D5450
7 SHAFT SEAL *	3179	3179	3179	3179
8 HEAD (CAST IRON) HEAD (BRONZE)	D2-1478 D2-1480	D2-1478 D2-1480	D2-1481 D2-1483	D2-1478 D2-1480
9 MOTOR	Contact Dunham-Bush, Inc., Marshalltown, Iowa			
10 SLINGER	C1038	C1038	C1038	C1038
11 SHIELD	C8958	C8958	D5478	C8958
12 GASKET *	A2-3020	A2-3020	A2-3020	A2-3020

NOTES:
1. NON-STANDARD pump parts are not shown. When ordering repair parts, refer to page 10 of this catalog.
2. * = These parts are required when replacing shaft seal.

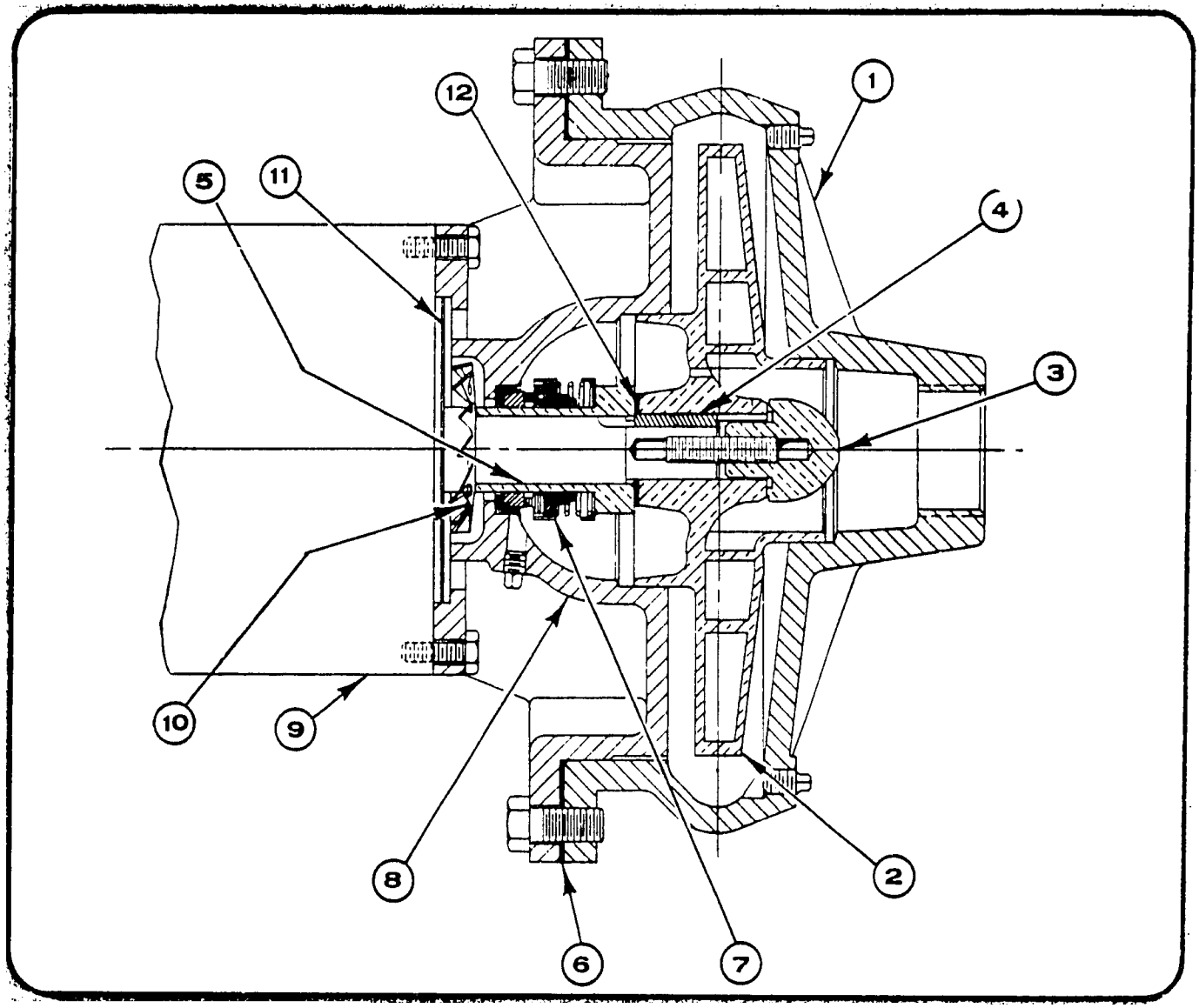

A9 PUMP AND PARTS LIST
SERIES A – 10 HP AND 15 HP

	PART NUMBER AND DESCRIPTION	10 HP 1¼" 3ϕ A9D2A	10 HP 2" 3ϕ A9D2A	10 HP 2½" 3ϕ A9D2A	15 HP 2" 3ϕ A9D2A
1	CASE (CAST IRON) CASE (BRONZE)	F540 D2-74	F544 D2-80	F545 D2-79	F544 D2-80
2	IMPELLER (BRONZE)	C2-3213X $6^{3}/_{8}$"	C2-3214X $5^{29}/_{32}$"	C2-3215X $5^{21}/_{32}$"	C2-3214X $6^{5}/_{16}$"
3	STUD & NUT ASSEMBLY	C10035 A2-3899	C10035 A2-3899	C10035 A2-3899	C10035 A2-3899
4	KEY	C7763	C7763	C7763	C7763
5	SLEEVE *	A2-3905	A2-3905	A2-3905	A2-3905
6	GASKET *	D5450	D5450	D5450	D5450
7	SHAFT SEAL *	3179	3179	3179	3179
8	HEAD (CAST IRON) HEAD (BRONZE)	D2-1481 D2-1483	D2-1481 D2-1483	D2-1481 D2-1483	D2-1481 D2-1483
9	MOTOR	Contact Dunham-Bush, Inc., Marshalltown, Iowa			
10	SLINGER	C1038	C1038	C1038	C1038
11	SHIELD	D5478	D5478	D5478	D5478
12	GASKET *	A2-3020	A2-3020	A2-3020	A2-3020

NOTES: 1. NON-STANDARD pump parts are not shown. When ordering repair parts, refer to page 10 of this catalog.
2. * = These parts are required when replacing shaft seal.

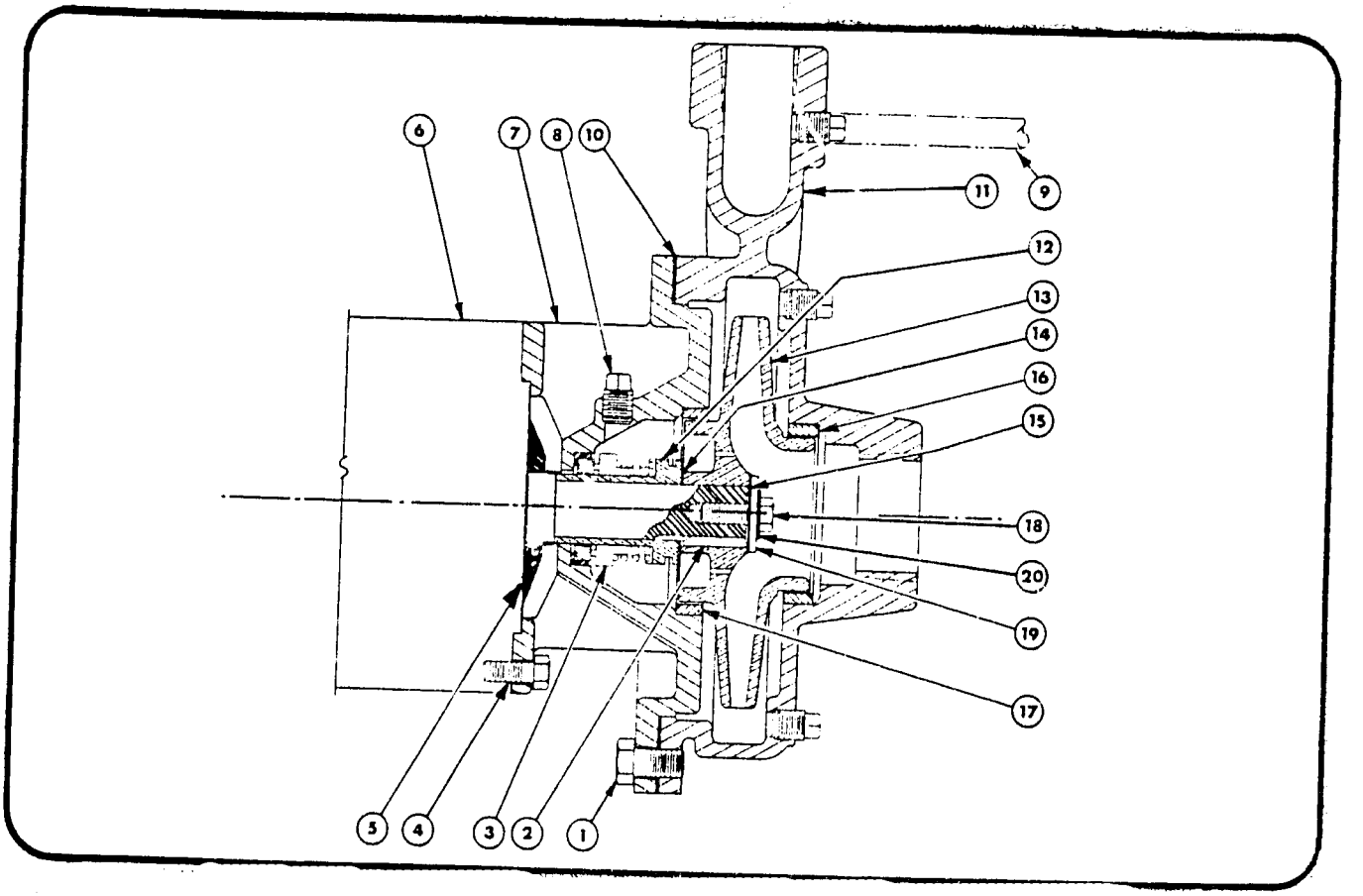

A7 PUMP AND PARTS LIST – ¾", 1¼" AND 1½" DIA. DISCHARGE

PART NUMBER & DESCRIPTION		¾" A7B	1¼" A7B	1¼" A7C	1½" A7B	1½" A7C
1.	Screw – Cap	P - 150				
2.	Key – Impeller	Supplied with Motor				
3.	Seal – Mechanical *	3179	3179	3179	3179	3179
	Seal – 250# Optional	Contact Dunham-Bush, Inc., Marshalltown, Iowa				
4.	Screw – Cap	P-142	P-142	P-150	P-142	P-150
5.	Slinger	Supplied with Motor				
6.	Motor	Contact Dunham-Bush, Inc., Marshalltown, Iowa				
7.	Head, C.I.	C2-2336	C2-2336	C2-2337	C2-2336	C2-2337
	Head, Bronze	C2-2660	C2-2660	C2-2661	C2-2660	C2-2661
	Head, C.I. w/wear Rings	C2-2345	C2-2345	C2-2346	C2-2345	C2-2346
8.	Fitting – Compression Straight	P - 194 (Optional)				
	Fitting – Elbow, Not shown	P - 195 (Optional)				
	Plug – Pipe	(5) P - 196				
9.	Tube	Copper 1/8" OD (Optional)				
10.	Gasket – Case *	C2-2343				
11.	Case, C.I.	C2-2390	C2-2335		C2-2377	
	Case, (Bronze)	C2-2665	C2-2666		C2-2667	
	Case, C.I. w/wear Rings	C2-2389	C2-2347		C2-2376	
	Case, 250# C.I.	Not Available				
	Case, 250# Bronze	Not Available				
	Case, 250# C.I. w/wear Rings	Not Available				
12.	Sleeve *	A2-3018	A2-3018	A2-3018	A2-3018	A2-3018
	Seal – 250# Optional	Contact Dunham-Bush, Inc., Marshalltown, Iowa				
13.	Impeller	C2-2378	C2-2340	C2-2340	C2-2380	C2-2380
14.	Gasket (Impeller – Sleeve) *	A2-3020	A2-3020	A2-3020	A2-3020	A2-3020
15.	Gasket (Impeller – Head) *	A2-3022-1				
16.	Ring – Case Wear Ring	A2-3026	A2-3015		A2-3027	
17.	Ring – Head Wear Ring	A2-3016				
18.	Screw – Impeller	3312	3312	3312	3312	3312
19.	Washer – Impeller	A2-3021-1				
20.	Washer – Sealing	3313	3313	3313	3313	3313

NOTES:
1. NON-STANDARD pump parts are not shown. When ordering repair parts, refer to page 10 of this catalog.
2. * = These parts are required when replacing shaft seal.

994

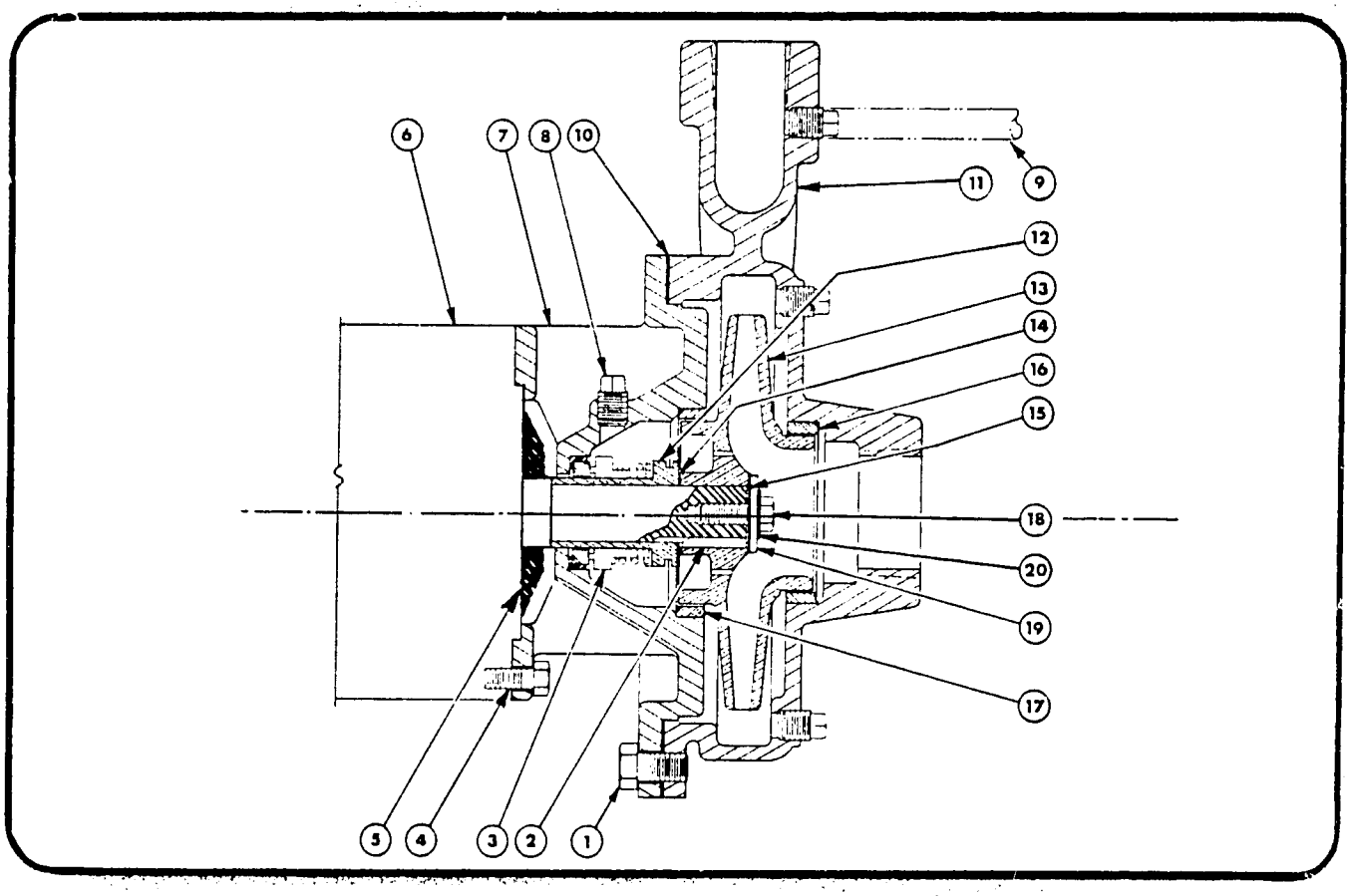

A7 PUMP AND PARTS LIST – 2" AND 2½" DIA. DISCHARGE

	PART NUMBER & DESCRIPTION	2" A7D	2" A7E	2" A7F	2½" A7D	2½" A7E	2½" A7E H.C.	2½" A7F
1.	Screw – Cap	P - 150						
2.	Key – Impeller	Supplied with Motor						
3.	Seal – Mechanical *	3179	3179	3291	3179	3179	3179	3291
	Seal – 250# Optional	Contact Dunham-Bush, Inc., Marshalltown, Iowa						
4.	Screw – Cap	P - 142	P - 150	P - 150	P - 142	P - 150	P - 150	P - 150
5.	Slinger	Supplied with Motor						
6.	Motor	Contact Dunham-Bush, Inc., Marshalltown, Iowa						
7.	Head, C.I.	C2-2384	C2-2386	C2-2388	C2-2384	C2-2386	C2-2386	C2-2388
	Head, Bronze	C2-2662	C2-2663	C2-2664	C2-2662	C2-2663	C2-2663	C2-2664
	Head, C.I. w/wear rings	C2-2383	C2-2385	C2-2387	C2-2383	C2-2385	C2-2385	C2-2387
8.	Fitting – Compression Straight	P - 194 (Optional)						
	Fitting – Elbow, Not shown	P - 195 (Optional)						
	Plug – Pipe	(5) P - 196						
9.	Tube	Copper 1/8" OD (Optional)						
10.	Gasket – Case *	C2-2343						
11.	Case, C.I.	D2-1274			D2-1276			
	Case, (Bronze)	D2-1352			D2-1355			
	Case, C.I. w/wear rings	D2-1273			D2-1275			
	Case, 250# C.I.	Not Available						
	Case, 250# Bronze	Not Available						
	Case, 250# C.I. w/wear rings	Not Available						
12.	Sleeve *	A2-3018	A2-3018	A2-3025	A2-3018	A2-3018	A2-3018	A2-3025
	Seal – 250# Optional	Contact Dunham-Bush, Inc., Marshalltown, Iowa						
13.	Impeller	C2-2381	C2-2381	C2-2382	C2-2381	C2-2381	C2-2392	C2-2382
14.	Gasket (Impeller – Sleeve) *	A2-3020	A2-3020	A2-3029	A2-3020	A2-3020	A2-3020	A2-3029
15.	Gasket (Impeller – Head) *	A2-3021-1		A2-3022-2	A2-3022-1			A2-3022-2
16.	Ring – Case Wear Ring	A2-3028						
17.	Ring – Head Wear Ring	A2-3016						
18.	Screw – Impeller	3312	3312	3292	3312	3312	3312	3292
19.	Washer – Impeller	A2-3021-1		A2-3021-2	A2-3021-1			A2-3021-2
20.	Washer – Sealing	3313	3313	3293	3313	3313	3313	3293

NOTES: 1. NON-STANDARD pump parts are not shown. When ordering repair parts, refer to page 10 of this catalog.
2. * = These parts are required when replacing shaft seal.

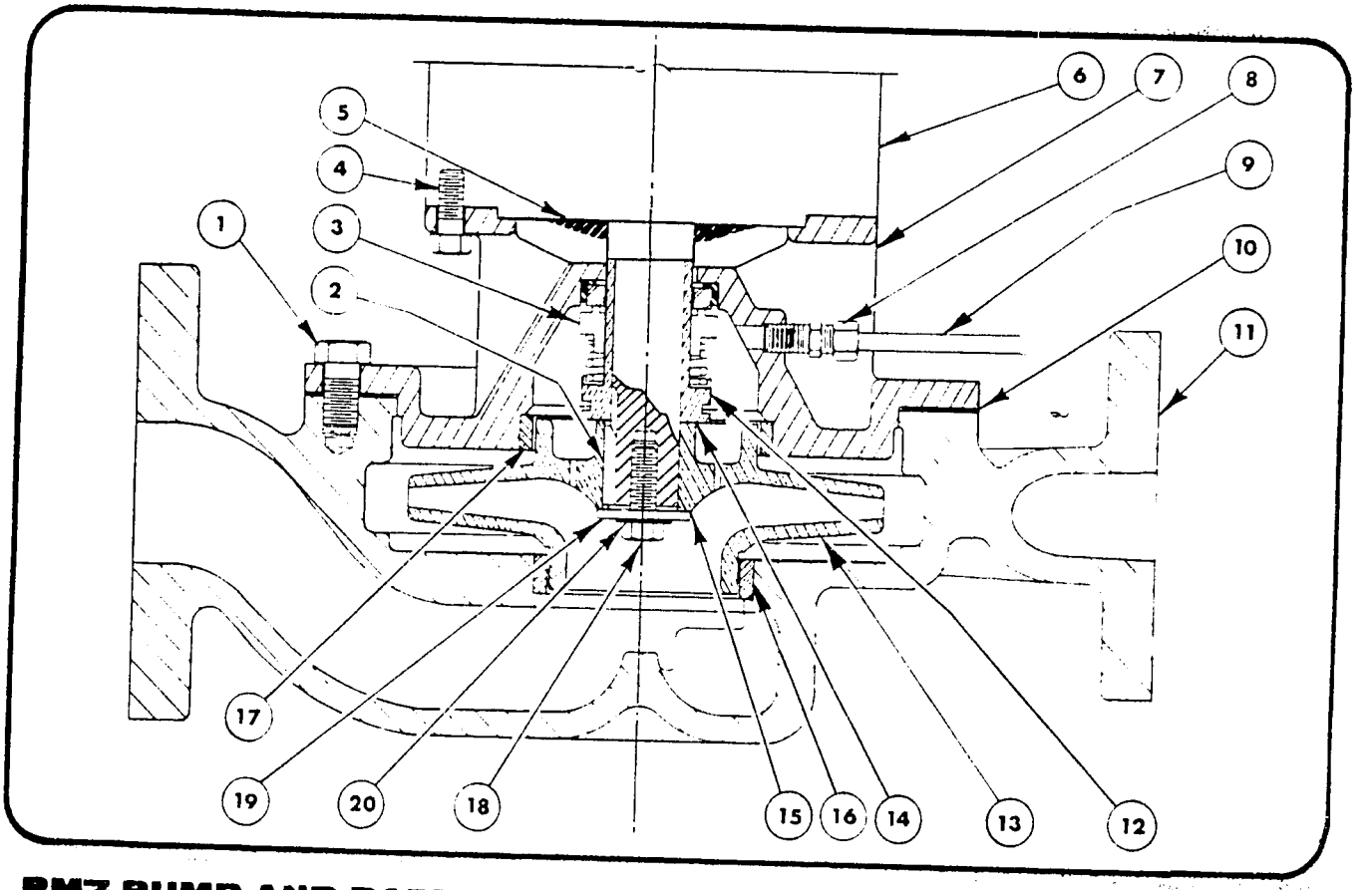

PM7 PUMP AND PARTS LIST – 1", 1¼" AND 1½" DIA. DISCHARGE

PART NUMBER & DESCRIPTION		1" PM7B	1¼" PM7B	1¼" PM7C	1½" PM7B	1½" PM7C
1.	Screw - Cap	P - 150				
2.	Key - Impeller	Supplied with Motor				
3.	Seal - Mechanical *	3179	3179	3179	3179	3179
	Seal 250= Optional	Contact Dunham-Bush, Inc. – Marshalltown, Iowa				
4.	Screw - Cap	P - 142	P - 142	P - 150	P - 142	P - 150
5.	Slinger	Supplied with Motor				
6.	Motor	Contact Dunham-Bush, Inc. – Marshalltown, Iowa				
7.	Head, C.I.	C2-2336	C2-2336	C2-2337	C2-2336	C2-2337
	Head, (Bronze)	C2-2660	C2-2660	C2-2661	C2-2660	C2-2661
	Head, C.I. w/wear rings	C2-2345	C2-2345	C2-2346	C2-2345	C2-2346
8.	Fitting - Compression Straight	P-194				
	Fitting - Elbow – Not shown	P-195				
	Plug - Pipe	(1) P-196				
9.	Tube	Copper 1/8" OD				
10.	Gasket - Case *	C2-2343				
11.	Case, C.I.	D2-1268	D2-1256	D2-1256	D2-1266	D2-1266
	Case, (Bronze)	D2-1346	D2-1348	D2-1348	D2-1350	D2-1350
	Case, C.I. w/wear rings	D2-1267	D2-1255	D2-1255	D2-1265	D2-1265
	Case, 250= C.I.	D2-1299	D2-1301	D2-1301	D2-1303	D2-1303
	Case, 250= Bronze	D2-1347	D2-1349	D2-1349	D2-1351	D2-1351
	Case, 250= C.I. w/wear rings	D2-1300	D2-1302	D2-1302	D2-1304	D2-1304
12.	Sleeve *	A2-3018	A2-3018	A2-3018	A2-3018	A2-3018
	Seal 250= Optional	Contact Dunham-Bush, Inc. – Marshalltown, Iowa				
13.	Impeller	C2-2379	C2-2340	C2-2340	C2-2380	C2-2380
14.	Gasket (Impeller - Sleeve) *	A2-3020	A2-3020	A2-3020	A2-3020	A2-3020
15.	Gasket (Impeller - Head) *	A2-3022-1				
16.	Ring - Case Wear Ring	A2-3026	A2-3015	A2-3015	A2-3027	A2-3027
17.	Ring - Head Wear Ring	A2-3016				
18.	Screw - Impeller	3312				
19.	Washer - Impeller	A2-3021-1				
20.	Washer - Sealing	3313				

NOTES: 1. NON-STANDARD pump parts are not shown. When ordering repair parts, refer to page 10 of this catalog.
2. * = These parts are required when replacing shaft seal.

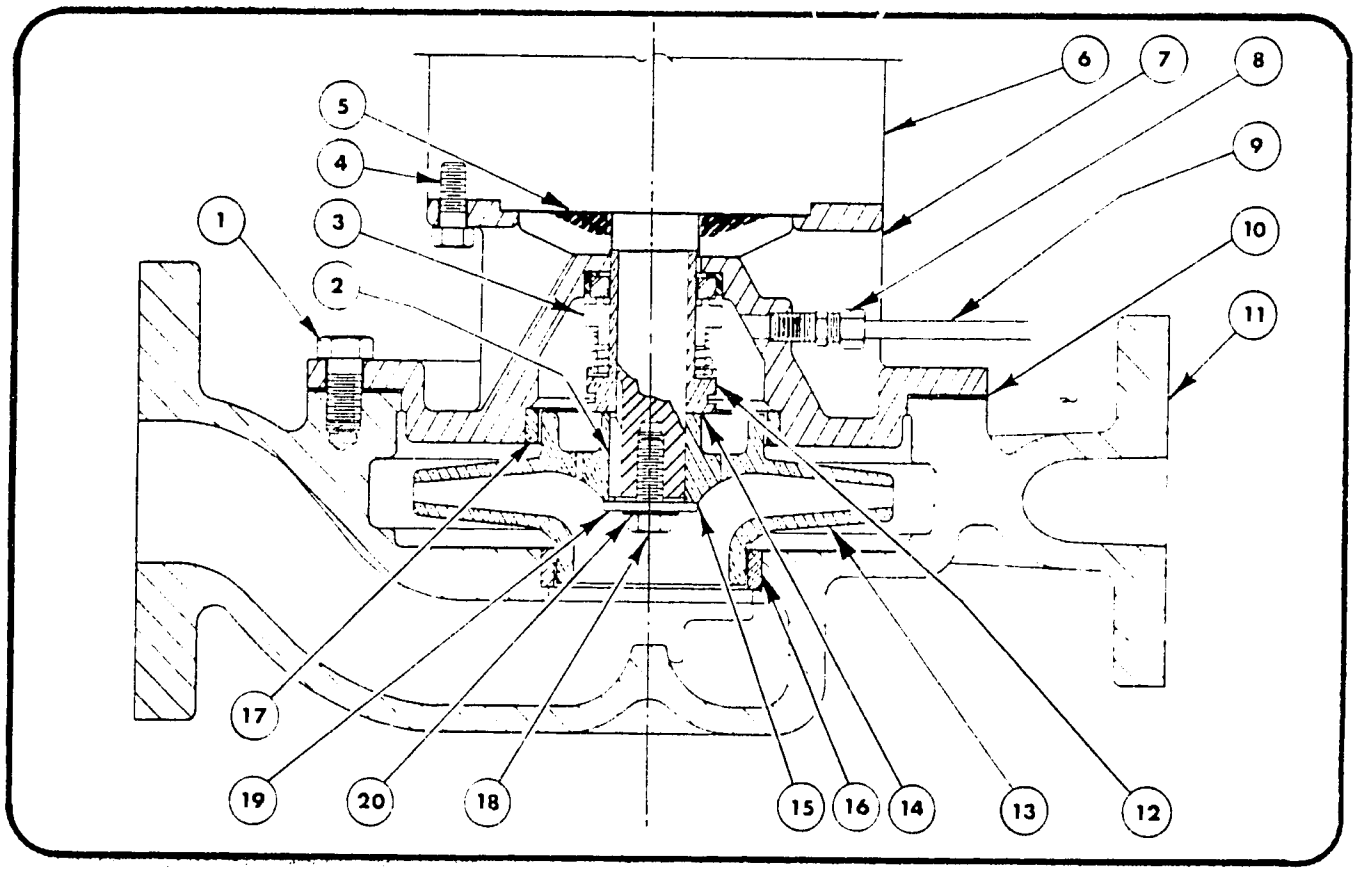

PM7 PUMP AND PARTS LIST – 2" AND 2½" DIA. DISCHARGE

PART NUMBER & DESCRIPTION		2" PM7D	2" PM7E	2" PM7F	2½" PM7D	2½" PM7E	2½" PM7E H.C.	2½" PM7F
1.	Screw - Cap	P - 150						
2.	Key - Impeller	Supplied with Motor						
3.	Seal - Mechanical *	3179	3179	3291	3179	3179	3179	3291
	Seal 250= Optional	Contact Dunham-Bush, Inc. – Marshalltown, Iowa						
4.	Screw - Cap	P - 142	P - 150	P - 150	P - 142	P -150	P - 150	P -150
5.	Slinger	Supplied with Motor						
6.	Motor	Contact Dunham-Bush, Inc. – Marshalltown, Iowa						
7.	Head, C.I.	C2-2384	C2-2386	C2-2388	C2-2384	C2-2386	C2-2386	C2-2388
	Head, (Bronze)	C2-2662	C2-2663	C2-2664	C2-2662	C2-2663	C2-2663	C2-2664
	Head, C.I. w/wear rings	C2-2383	C2-2385	C2-2387	C2-2383	C2-2385	C2-2385	C2-2387
8.	Fitting - Compression Straight	P-194						
	Fitting - Elbow – Not Shown	P-195						
	Plug - Pipe	(1) P-196						
9.	Tube	Copper 1/8" OD						
10.	Gasket - Case *	C2-2343						
11.	Case, C.I.	D2-1270			D2-1272			
	Case, (Bronze)	D2-1269			D2-1356			
	Case, C.I. w/wear rings	D2-1353			D2-1271			
	Case, 250= C.I.	D2-1305			D2-1307			
	Case, 250= Bronze	D2-1354			D2-1357			
	Case, 250= C.I. w/wear rings	D2-1306			D2-1308			
12.	Sleeve *	A2-3018	A2-3018	A2-3025	A2-3018	A2-3018	A2-3018	A2-3025
	Seal 250= Optional	Contact Dunham-Bush, Inc. – Marshalltown, Iowa						
13.	Impeller	C2-2381	C2-2381	C2-2382	C2-2381	C2-2381	C2-2392	C2-2382
14.	Gasket (Impeller - Sleeve) *	A2-3020	A2-3020	A2-3029	A2-3020	A2-3020	A2-3020	A2-3029
15.	Gasket (Impeller - Head)	A2-3022-1		A2-3022-2	A2-3022-1			A2-3022-2
16.	Ring - Case Wear Ring	A2-3028						
17.	Ring - Head Wear Ring	A2-3016						
18.	Screw - Impeller	3312		3292	3312			3292
19.	Washer - Impeller	A2-3021-1		A2-3021-2	A2-3021-1			A2-3021-2
20.	Washer - Sealing	3313		3293	3313			3293

NOTES: 1. NON-STANDARD pump parts are not shown. When ordering repair parts, refer to page 10 of this catalog.
2. * = These parts are required when replacing shaft seal.

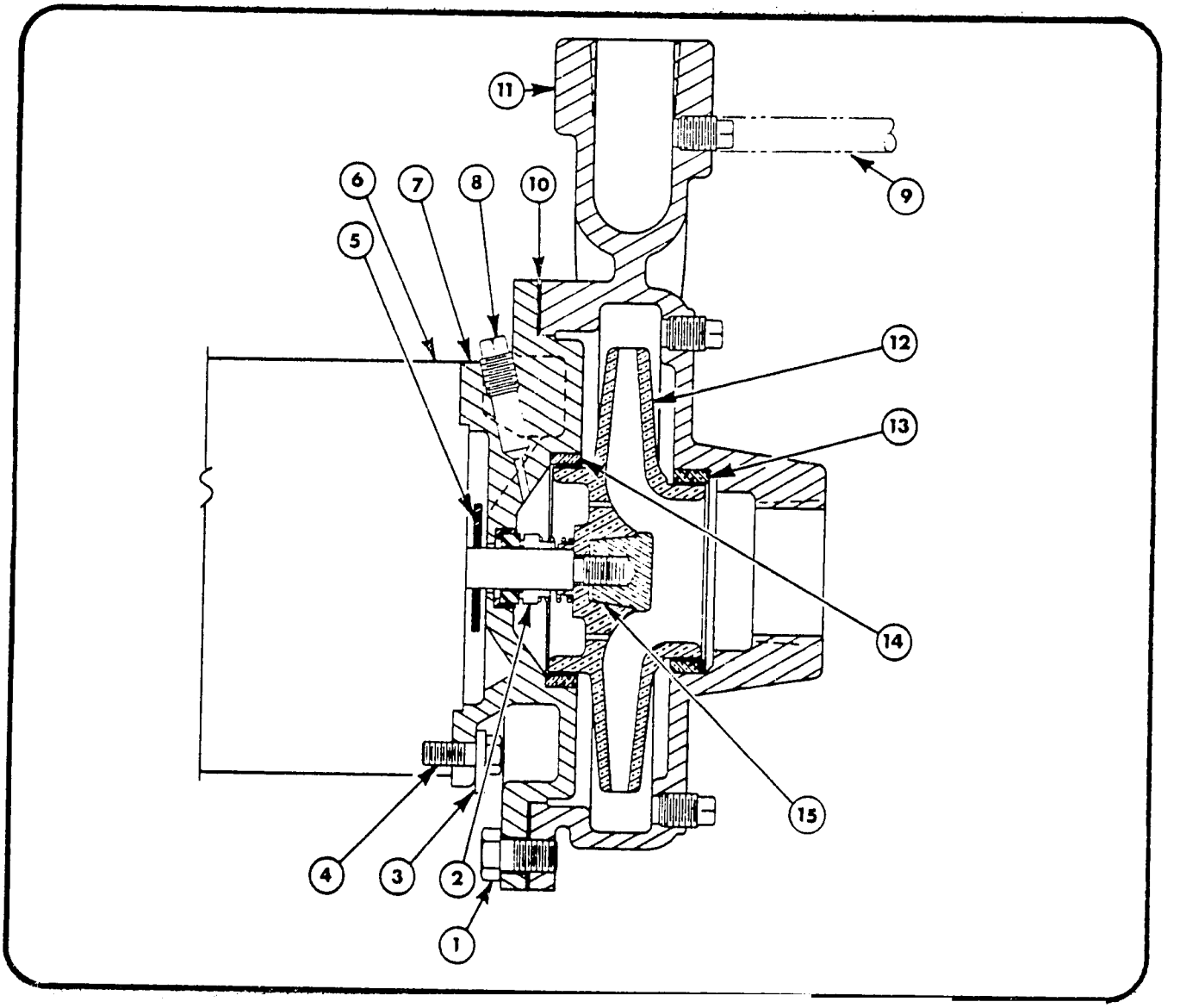

A7A PUMP AND PARTS LIST – ¾", 1¼" AND 1½" DIA. DISCHARGE

	PART NUMBER & DESCRIPTION	¾" A7A	1¼" A7A	1½" A7A
1.	Screw–Cap	P - 150	P - 150	P - 150
2.	Seal–Mechanical *	472	472	472
3.	Retainer–Head	A2-3023	A2-3023	A2-3023
4.	Screw–Cap	P - 142	P - 142	P - 142
5.	Slinger	C8854	C8854	C8854
6.	Motor	Contact Dunham-Bush, Inc. Marshalltown, Iowa		
7.	Head, C.I.	C2-2342	C2-2342	C2-2342
	Head, Bronze	C2-2659	C2-2659	C2-2659
	Head, C.I. w/wear rings	C2-2344	C2-2344	C2-2344
8.	Fitting – Compression Straight	P - 194 (Optional)		
	Fitting – Elbow (Not Shown)	P - 195 (Optional)		
	Plug–Pipe	(5) P - 196		
9.	Tube	Copper 1/8" OD (Optional)		
10.	Gasket–Case *	C2-2343	C2-2343	C2-2343
11.	Case, C.I.	C2-2390	C2-2335	C2-2377
	Case, Bronze	C2-2665	C2-2666	C2-2667
	Case, C.I. w/wear rings	C2-2389	C2-2347	C2-2376
12.	Impeller	C2-2378	C2-2339	C2-2498
13.	Ring – Case Wear Ring	A2-3026	A2-3015	A2-3027
14.	Ring – Head Wear Ring	A2-3016	A2-3016	A2-3016
15.	Screw–Impeller	A2-3691	A2-3691	A2-3691

NOTES:
1. NON-STANDARD pump parts are not shown. When ordering repair parts, refer to page 10 of this catalog.
2. * = These parts are required when replacing shaft seal.

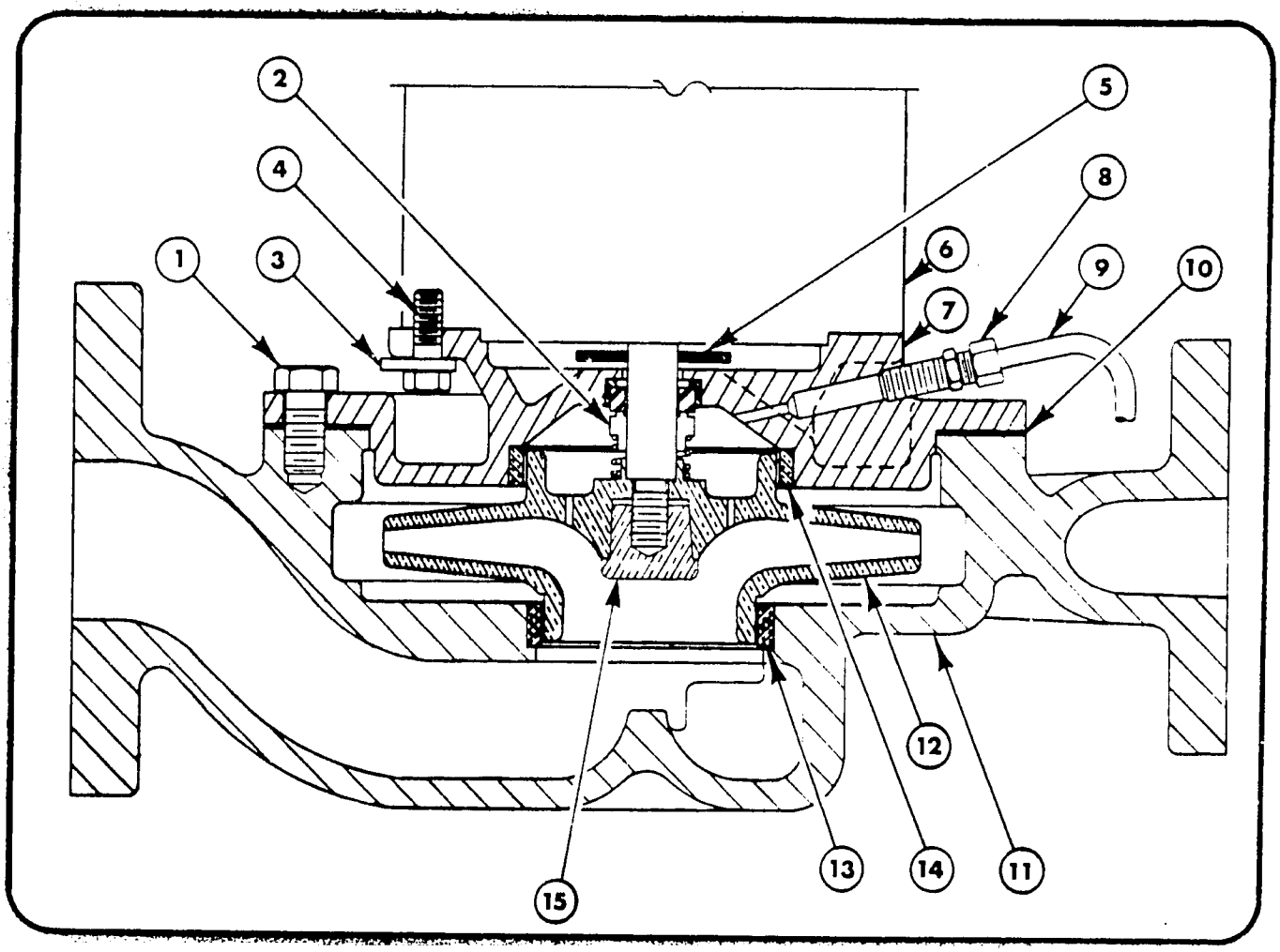

PM7A PUMP AND PARTS LIST
1", 1¼" AND 1½" DIA. DISCHARGE

PART NUMBER & DESCRIPTION		1" PM7A	1¼" PM7A	1½" PM7A
1.	Screw—Cap	P - 150	P - 150	P - 150
2.	Seal—Mechanical *	472	472	472
3.	Retainer—Head	A2-3023	A2-3023	A2-3023
4.	Screw—Cap	P - 142	P - 142	P - 142
5.	Slinger	C8854	C8854	C8854
6.	Motor	Contact Dunham-Bush, Inc., Marshalltown, Iowa		
7.	Head, C.I.	C2-2342	C2-2342	C2-2342
	Head, Bronze	C2-2659	C2-2659	C2-2659
	Head, C.I. w/wear rings	C2-2344	C2-2344	C2-2344
8.	Fitting—Compression Straight	P - 194		
	Fitting—Elbow (Not Shown)	P - 195		
	Plug—Pipe	(1) P - 196		
9.	Tube	Copper 1/8" OD		
10.	Gasket—Case *	C2-2343	C2-2343	C2-2343
11.	Case, C.I.	D2-1268	D2-1256	D2-1266
	Case, Bronze	D2-1346	D2-1348	D2-1350
	Case, C.I. w/wear rings	D2-1267	D2-1255	D2-1265
	Case, 250= C.I.	D2-1299	D2-1301	D2-1303
	Case, 250= Bronze	D2-1347	D2-1349	D2-1351
	Case, 250= C.I. w/wear rings	D2-1300	D2-1302	D2-1304
12.	Impeller	C2-2378	C2-2339	C2-2498
13.	Ring—Case Wear Ring	A2-3026	A2-3015	A2-3027
14.	Ring—Head Wear Ring	A2-3016	A2-3016	A2-3016
15.	Nut—Impeller	A2-3691	A2-3691	A2-3691

NOTES: 1. NON-STANDARD pump parts are not shown. When ordering repair parts, refer to page 10 of this catalog.
2. * = These parts are required when replacing shaft seal.

DUNHAM-BUSH

AIR CONDITIONING, REFRIGERATION, HEATING PRODUCTS AND ACCESSORIES

MAIN OFFICES

175 SOUTH STREET WEST HARTFORD, CONNECTICUT 06110

FACTORIES

WEST HARTFORD DIVISION
179 South Street
West Hartford, Connecticut
06110

HARRISONBURG DIVISION
101 Burgess Road
Harrisonburg, Virginia
22801

MARSHALLTOWN DIVISION
811 East Main Street
Marshalltown, Iowa
50158

RIVERSIDE DIVISION
1850 Massachusetts Ave.
Riverside, California
92507

SUBSIDIARIES

DUNHAM-BUSH of Canada Limited
140 Wendell Avenue
Weston, Ontario

DUNHAM-BUSH, LTD.
Fitzherbert Road, Farlington
Portsmouth, Hampshire, England

DUNHAM-BUSH INTERNATIONAL: 175 South Street, West Hartford, Connecticut 06110, U.S.A.
CABLE: DUNBUSH or TELEX: 994469

SALES OFFICES

ALABAMA
Birmingham
Mobile

ARIZONA
Phoenix

ARKANSAS
Little Rock

CALIFORNIA
Arcadia
Los Angeles
Sacramento
San Diego
San Francisco

COLORADO
Denver

CONNECTICUT
Hartford
Bloomfield

FLORIDA
Clearwater
Jacksonville
Miami
Orlando

GEORGIA
Atlanta

HAWAII
Honolulu

ILLINOIS
Chicago
Peoria
Rockford

INDIANA
Indianapolis
Michigan City

IOWA
Des Moines

KANSAS
Lenexa

KENTUCKY
Louisville

LOUISIANA
New Orleans
Shreveport

MAINE
Lewiston

MARYLAND
Baltimore
Silver Spring

MASSACHUSETTS
Boston
Springfield

MICHIGAN
Detroit
Grand Rapids
Kalamazoo

MINNESOTA
Minneapolis

MISSISSIPPI
Jackson

MISSOURI
Kansas City
St. Louis

MONTANA
Billings
Great Falls

NEBRASKA
Omaha

NEW JERSEY
Hazlet
Little Falls
Union

NEW MEXICO
Albuquerque

NEW YORK
Albany
Buffalo
New York City
Rochester
Syracuse

NORTH CAROLINA
Charlotte
Greensboro

OHIO
Akron
Cincinnati
Cleveland
Columbus
Dayton
Delaware
Toledo

OKLAHOMA
Oklahoma City
Tulsa

OREGON
Portland

PENNSYLVANIA
Harrisburg
Philadelphia
Pittsburgh
Pittston

PUERTO RICO
Caparra Heights

RHODE ISLAND
Providence

TENNESSEE
Memphis
Knoxville
Nashville

TEXAS
Dallas
El Paso
Houston
Lubbock
San Antonio

UTAH
Salt Lake City

VIRGINIA
Alexandria
Harrisonburg
Richmond
Virginia Beach

WASHINGTON
Seattle
Spokane

WEST VIRGINIA
Barboursville

WISCONSIN
Milwaukee

DUNHAM-BUSH, INC. • Marshalltown, Iowa 50158, U.S.A.

3440B-5M-477B-1079B

one of The Signal Companies

4/c 20064 (DIB)
620995 (U.S.)

Exhibit G-8

Mittinaawy I C . E Factory

I _ Spare Parts For 5_ years

For Metennawy ice block

Faetory serew compressor

I Pex 120 - D . Q

II- And the missed accessories

Whieh must be required from

Dunham - Bush eonpany

Prapared by

Enyyineer salah Botvos Khirallb

1001

I - Spare Parts for 5- years

Senal MΩ	Discription	D:B part MΩ	QTY.
	Compressor assyembly I6IoD1 FiloD		
I	Sucrior Gasket (4" I5oH)	GKT 252	4
2	Descharge gasket (3" 3ooH)	GKT 258	4
3	Indicator assgmbly (Slide Valve)	IDR 56A	I
4	Seal field Replacment part	XFRK 7T2	I
	Chiller assy. I4"	X2834XIo	
5	Flow Switch	SWT 6I	2
6	Pilot expansion valve	VAL 9I9	2
7	Expansion valve withcoil	VAL 786	2
8	Sight glass moisture indica-dor	o8I7GIo	I
9	Filter Drier block	BLK42	I2
Io	Temp . Sensor control	CNT 233T4	I
	Liquidinjection assy.	INJ 3ATI	
II	Expansion valve	VAL 69ITI	2
I2	Solenoid valve coil	COL I23TI	2
I3	Solenoid valve/ less coil	VAL 9 °2 TI°	I
	Seal oil cooler assy	Soc IATI	
I4	Solenoid valve coil	COL I22 TI	I
I5	Temp. Pilot valve	VAL 769	I
I6	Check valve	VAL 388	I
I7	Solenoid valve / Less coil	VAL 488	I

Seril Nº	Discription	D/B part Mº	QTY.
	Condenser assy . I4"	X2834 Xo8	
I8	Condenser inlet H ead Gasket	Gkt 259	2
I9	Co n denser return Head Gasket	Gkt I43	2
2o	Refrigerent Oil Gasket	Gkt 62	2
	Oil Sump assy. I6."	X 2834 X I9	
2I	Oil Sump Heater	HTR 7I	2
	Oil filter assy.	Flrhoati, At8	
22	Filter element W / Gasket	FIR I25	6
	Unload Solenoid Valve assy	VAL 509 A	
23	24 V Coil	Col I22 T4I	4
24	II5 V Coil	Col I22 T40	2
	Solenoid Valve / Less Coil	VAL 488	3
26	Metering Valve	VAL 547	3
	Control Box 380/3/50	X 2834 X20	
27	Control circuit Braker (IcB)	Bkr 73	2
28	Oil Heater circuit Braker(2CB)	BKR 74	2
29	Master comtrol Relay (ICR)	RLY I33	2
3o	Transger Relay (2CR)	RLY I34	2
3I	Lock in Relay (4CR)	RLY I33	I
32	Timer- scal oil Temp T'stat (I2TR)	TMR I35	2
33	Anti Reeycle Timer (ITR)	TMR II4	2
34	Oil Pressure failure timor (2TR)	TMR IIo	2
35	Oil pump shut down Timer (3TR)	TMR Io5	2

Scial	Dicription	D/B part Nº	QTY.
36	Start up time delay timer 4TR	TMRIo5	2
37	Elapsed time indicator 6TR	TMR 86	I
38	Hi/Lo pressure control Ips	CNT I75	I
39	Low suction press. pump ponn 2ps	CHT I67	I
4o	Oil Failure control 3ps	SWT 8o	I
4I	Temp . Load control TLC	CNT 232	2
42	Comp. control Relay 3cR	RLY I34	2
43	Chilled Water T stat 2TAS	CNT 55	2
44	Temp control I3 TAS, I2 TAS, 8TAS	CNT 23I	3
45	On/off switch Iss	SWT 83	I
46	Lamp 2LT , 3LT	LMP I5	6
47	Lamp 4LT , 5LT	LMP I4	6
48	Transformer (24V Sec) 2T	TSF 26	3
49	Pump starter aux contact AUX	SWT 7I	4
5o	Oil pump starter IM	SRTD3A3DIo	3
5I	Suction prcvure gauge	GAgE 4o	I
52	Dish , oil S gauge	GAge 4I	I
53	Relay (6CR)	RIY I34	I
54	Relay (8CR)	RIY I35	I
55	Timer unlaad statt (7TR)	TMRIIo	2

II - The accessories which must

Be available with I pcx 120

I 2- Chiller pump suitable

For 390 G P M (as design mentioned at Dunhum - Bush Form

No 6047 A november 1972

By aid of dunhum - bush form no 1448f

Centr if uyal pumps

We saggest cenhrifugal pump A9

15 HP 2½ A9 D615 - 2

Complete calcuim cloride unit cooler for the ice block stere

saitable for sterage 700 blocks.

CONTRACT NO. AID/OTR-C-1629
PIO/T NO. 263-026-3-90315
WBEC PROJECT NO. 4631
PROCUREMENT AND TECHNICAL REVIEW
FOR USAID CAIRO, EGYPT

This report section pertains to the following project:

Importer:	Mamoon (United Refrig. Co.)
Order No:	EA 10026
L/C Bank:	Bank of America
U.S. Bank L/C No:	620839
L/C Amount:	$185,500.00
DIB L/C No.:	20024
SER/COM:	#7

EQUIPMENT IDENTIFICATION

The equipment and spare parts lists from the suppliers final invoice and the equipment list from the contractor's on-site inspection are itemized in tabular form.

Consistency of the two parts lists may be easily established. This form also indicates compliance with the proforma invoice, contract and bank appraisal report.

Equipment details, such as catalog and serial numbers are shown on the contractor's on-site Equipment Identification form following the Equipment and Spare Parts Lists.

SER/COM #7
United Refrigeration
(Mamoon)

EQUIPMENT LIST

CONTRACTOR ON-SITE INSPECTION	Dated 11-10-78 DUNHAM BUSH INVOICE # EA 10026	DOCUMENT VERIFICATION		
		PROFORMA INVOICE	CONTRACT LOCAL	D.I.B. APPR. REPORT
(16) Water cooled-condensing units w/ compressor Model WH151PHF5	(18) Water cooled-condensing units Model WH151PHF5	(18) Water-cooled condensing units	(?) Condenser and compressor	(18) Water-cooled condensing units Model WH151PHF5
(2) Water cooled-condensing units w/ compressor Model WH200PHF5	(9) Air Handling Units w/6 row 8 FPI coil	(9) Air Handling Units w/6 row coil 8 FPI	(?) Air Handling Units w/coils	(9) Air Handling Units w/ DX coil Model VAH100
(9) Air Handling Units w/coils Model HAH-100-Q				
(2) Pumps Model A9D60-2A				

SER/COM #7
United Refrigeration
(Mamoon)

SPARE PARTS LIST

CONTRACTOR ON-SITE INSPECTION	Dated 11-10-78 DUNHAM-BUSH INVOICE #EA 10026	COMMENTS
Importer stated all spare parts as listed on invoice and proforma were received.	8 GA 1774 COMP-MTG-SPACER 2 MCIC 1000 CONDENSER 2 REC 68 RECEIVER 2 VAL 164 TOWER WATER 2 CNT 22 DUAL PRESS-CNT 2 CNT 106 OIL FAIL-CNT 2 650B 395 BRACKET CONTROL 1 VAL 331 VALVE R-OUT 4 GA 467 GASKET, R-OUT VALVE 4 PLU 135 FUSIBLE PLUG E 2 GA 1521 CRANKCASE HEATER 2 VAL 685 T2 RELIEF VALVE 5 REC 82 HEATER RCV'R 2 HTR 94T5 RECEIVER HEATER IMMERSION TYPE 2 CNT 229 REC HEATER THERMO-STAT 2 VAL 389 CHECK VALVE HTD-RCVR	Proforma Spare Parts List is identical to invoice. Contract indicates parts needed for 1 year will be furnished but does not itemize. D.I.B. Appraisal Report also itemizes identical list of spare parts as invoice.

SER/COM #7
United Refrigeration
(Mamoon)

DATE

IMPORTER:

DIB L/C#

LOCATION:

U.S. L/C

SERVICE:

AMOUNT

EQUIPMENT IDENTIFICATION

TYPE	MODEL	SERIAL
COMPRESSOR W/ WATER COOLED CONDENSER		
1-A UNIT	WH151PHF5	18D0496F
COMPRESSOR	151PHF/CF-5	78A0496-F
1-B UNIT	WH151PHF5	78B0926F
COMPRESSOR	151PHF/CF-5	78B0926-F
2-A UNIT	WH151PHF5	78A0493F
COMPRESSOR	151PHF/CF-5	78A0493-F
2-B UNIT	WH151PHF5	78B0930-F
COMPRESSOR	151PHF/CF-5	78B0930-F
3-A UNIT	WH151PHF5	78B0933F
COMPRESSOR	151PHF/CF-5	78B0933-F
3-B UNIT	WH151PHF5	78B0928F
COMPRESSOR	151PHF/CF-5	78B0928-F
4-A UNIT	WH151PHF5	78B0939F
COMPRESSOR	151PHF/CF-5	78B0939-F
4-B UNIT	WH151PHF5	78A0949F
COMPRESSOR	151PHF/CF-5	78A0494-F
5-A UNIT	WH151PHF5	78B0936F
COMPRESSOR	151PHF/CF-5	78B0936-F
5-B UNIT	Wh151PHF5	78B0934F
COMPRESSOR	151PHF/CF-5	78B0934-F

SER/COM #7
United Refrigeration
(Mamoon)

DATE

IMPORTER:

DIB L/C#

LOCATION:

U.S. L/C

SERVICE:

AMOUNT

EQUIPMENT IDENTIFICATION

TYPE	MODEL	SERIAL
6-A UNIT	WH151PHF	780610066
COMPRESSOR	151PHF/CF-5	78B0927-F
6-B UNIT	WH151PHF5	78B0937F
COMPRESSOR	151PHF/CF-5	78B0937-F
7-A UNIT	WH151PHF5	78A0495F
COMPRESSOR	151PHF/CF-5	78A0495-F
7-B UNIT	WH151PHF5	78A0491F
COMPRESSOR	151PHF/CF-5	78A0491-F
8-A UNIT	WH151PHF5	78B0932F
COMPRESSOR	151PHF/CF-5	78B0932-F
8-B UNIT	WH200PHF5	77E0041S
COMPRESSOR	201PHF/CF	77M0575-S
9-A UNIT	WH200PHF5	77E0037F
COMPRESSOR	201PHF/CF-5	77E0037-F
9-B UNIT	WH151PHF5	78A0492F
COMPRESSOR	151PHF/CF-5	78A0492-F

SER/COM #7
United Refrigeration
(Mamoon)

DATE _____

IMPORTER: _____ DIB L/C# _____

LOCATION: _____ U.S. L/C _____

SERVICE: _____ AMOUNT _____

EQUIPMENT IDENTIFICATION

	TYPE	MODEL	SERIAL
1.	AHU w/EVAP. COIL	HAH-100-Q	78040055
		P/N 6330772-01	10 H.P. 1750 RPM
	MOTOR-Gould	FR. S2157	230/460/3/60
2.	AHU w/EVAP. COIL	HAH-100-Q	78041154
		P/N 6-330772-01	10 H.P. 1750 RPM
	MOTOR-Gould	FR. S215T	230/460/3/60
3.	AHU w/EVAP. COIL	HAH-100-Q	780401152
		P/N 6-330772-01	10 H.P. 1750 RPM
	MOTOR-Gould	FR. S215T	230/460/3/60
4.	AHU w/EVAP. COIL	HAH-100-Q	780401151
		B52613 (71HEZ61A-82)	10 H.P. 7.5KW 1500 RPM
	MOTOR-Kirloskar(India)	FR. N132M	30/60/220/380V
5.	AHU w/EVAP. COIL	HAH-100-Q	780401153
		P/N 6-330772-01	10 H.P. 1700 RPM
	MOTOR-Gould	FR. S215T	230/460/3/60
6.	AHU w/EVAP. COIL	HAH-100-Q	780401150
		P/N 6-330772-01	10 H.P. 1750 RPM
	MOTOR-Gould	FR. S215T	230/460/3/50
7.	AHU w/EVAP. COIL	HAH-100-Q	780401156
		BS2613 (71HE61A-19	10 H.P. 7.5KW 1500 RPM
	MOTOR-Kirloskar(India)		220/380/5/50
8.	AHU w/EVAP. COIL	HAH-100-Q	780401157
		P/N 6330772-01	10 H.P. 1750 RPM
	MOTOR-Gould	FR. S215T	230/460/3/60
9.	AHU w/EVAP. COIL	HAH-100-Q	780401158
		P/N 6-330772-01	10 H.P. 1750 RPM
	MOTOR-Gould	FR. S215T	230/460/3/60

DATE 2-10-81

IMPORTER: United Refrigeration Co.

DIB L/C# 20024

LOCATION: Cairo

U.S. L/C 620839

SERVICE: Cold Storage Plant

AMOUNT USD $185,500.00

EQUIPMENT IDENTIFICATION

1.	TYPE	PUMP	250GPM	MODEL A9D60-2A	SERIAL 58645
		MOTOR	10 H.P.	FR. S213JM	P/N 6-335004-02
2.		PUMP	250GPM	A9D60-2A	58644
		MOTOR	10 H.P.	FR. S213JM	P/N 6-333004-02

STATUS:

REMARKS:

EQUIPMENT VALUE

Equipment value will be considered in two parts. PART #1 will determine if the net sale value of the equipment as indicated by Mr. Matava and Mr. Stillson of Dunham-Bush appear to reflect reasonable pricing. Pricing consistency with competitive pricing quotations will also be considered. PART #2 will determine if the net sale price established in PART #1 is consistent with the final invoice. As stated by AID funding regulations the final invoice amount must reflect reasonable pricing.

PART #1

Competitive quotations were not obtainable on this specific project from the Egyptian Bank, D.I.B. Therefore, the contractor does not have specific competitive pricing information available on this project for evaluation. It is strongly recommended that competitive bids be obtained prior to issuing a letter of credit and kept on file by the lending institution. However, based on previous project experience the "NET SALE PRICE" indicated by Mr. Matava and Mr. Stillson appear to be reasonable.

As stated in the equipment identification section, there were eighteen (18) water cooled condensing units w/compressors, two (2) pumps and nine (9) Air Handling Units w/coils installed at the job site. Spare parts had also been received by the importer. The sales value for this equipment is stated on the following EXPORT ORDERS from Dunham-Bush.

Description	Sales Office Order Number	Unit Cost	Total
18 Condensing Units	EA 10026A	$2,091.00	$37,638.00
2 Centrifugal Pumps w/motors	EA 10026B	$ 608.40	1,216.80
9 Air Handling Units w/coils	EA 10026C	$2,674.00	24,066.00
		Equipment Sub Total	$62,920.80

SPARE PARTS

Description	Sales Office Order Number	Unit Cost	Total
8 GA 1774 COMP-MTG-SPACER	EA 10026D	$ 1.51	$ 12.08
2 MCIC 1000 CONDENSER	EA 10026E	1,102.00	2,204.00
2 REC 68 RECEIVER	EA 10026F	75.00	150.00
2 VAL 164 TOWER WATER	EA 10026D	192.95	385.90
2 CNT 22 DUAL PRESS-CNT	EA 10026D	31.55	63.10
2 CNT 106 OIL FAIL-CNT	EA 10026D	59.39	118.78
2 650B 395 BRACKET CONTROL	EA 10026D	1.51	3.02
1 VAL 331 VALVE R-OUT	EA 10026D	6.43	6.43
4 GA 467 GASKET, R-OUT VALVE	EA 10026D	.32	1.28
4 PLU 135 FUSIBLE PLUG E	EA 10026D	1.43	5.72
2 GA 1521 CRANK-CASE HEATER	EA 10026D	28.08	56.16

SPARE PARTS (cont.)

Description	Sales Office Order Number	Unit Cost	Total
2 VAL 685 T2 RELIEF VALVE	EA 10026D	17.98	35.96
5 REC 82 HEATER RCV'R	EA 10026F	76.20	152.40
2 HTR 94T5 RECEIVER HEATER IMMERSION TYPE	EA 10026D	39.35	78.70
2 CNT 229 REC HEATER THERMO-STAT	EA 10026D	17.37	34.68
2 VAL 389 CHECK VALVE HTD-RCVR	EA 10026D	17.09	34.18
		Spare Parts Sub Total	$ 3,342.39
		TOTAL OF EQUIPMENT & SPARE PARTS	$66,263.19

The "NET SALE VALUE" referenced earlier from Mr. Matava and Mr. Stillson of Dunham-Bush home office is $66,493.65.

The two figures are in relatively good agreement and are consistent with the value anticipated by the contractor. Therefore, the "NET SALE VALUE" for equipment and spare parts of $66,493.65 F.O.B. Factory will be considered reasonable.

PART #2

Consistency between the Invoice Amount and the "NET SALE VALUE" was established as follows:

Dunham-Bush Invoice No. EA 10026 (11-10-78)	$185,500.00
Total Invoiced	$185,500.00
Less "NET SALE VALUE" of equipment and spare parts F.O.B. Factory	(66,493.65)
	$119,006.35

Therefore, $119,006.35 was retained for packaging, freight, insurance and additional profit. This dollar amount represents a mark-up of 179% of the "NET SALES VALUE". A mark-up of this magnitude appears to be a violation of the "Price Provisions" regulation for the use of AID funds. The regulation states, "No funds made avaiable under this Act shall be used for the purchase in bulk of any commodities at prices higher than the market price prevailing in the United States at the time of purchase, adjusted for differences in the cost of transportation to destination, quality, and terms of payment".

It should also be noted that documentation supplied from Dunham-Bush indicated copper, copper fittings, freon and refrigeration accessories totaling $82,178.16 were bought by C.A.C. Corporation for this project (Mandouh Mamoon). The invoices associated with this amount are:

Date	Company	Co. Order No.	Invoice Amount
2-14-79	Mueller Brass Co.	#33F95270	$49,601.70
3-1-79	Mueller Brass Co.	#33F95271	750.00
1-30-79	Sillcox Air Conditioning	#9250-GE	17,586.53
10-30-78	Sillcox Air Conditioning	#8786-AE/GE/H?	14,239.93
			$82,178.16

These items were not listed on the final invoice to Mr. Mamoon (United Refrigeration), these items were not found on the job-site location, and these items were not requested or

delivered to the job-site according to the project importer Mr. Mamdouh Mamoon. Quantities of most items on the supplier's invoice are in excess of the requirements for one facility of this size. If these items were purchased for this project, the necessity, present location and the quantity of these items should be explained by C.A.C. Corporation.

EQUIPMENT CAPABILITY

The expected equipment performance capability is stated by two project documents: the Bank's Appraisal Report (D.I.B.) and by the project contract.

> D.I.B. APPRAISAL REPORT - The Development Industrial Bank bases their study on 3000 tons of produce storage cooled at a temperature between -2°C. and 8°C. The storage space required is stated to be 3600M^2 of floor space 5M high. The area is to be divided into six separate rooms. Vegetables, fruit and milk products are stated to be the principal kinds of produce intended for storage.
>
> PROJECT CONTRACT - This project has an original "Contract" dated 4-18-77 and an "Annex to the Contract". The original contract states a cooling system is to be provided suitable for storing fresh vegetables and fruits. The capacity of the refrigerator will be 3000 tons of produce storage. The "Annex" states that an additional storage capacity of 1500 tons is to be included which will allow a storage temperature under 2°C. below zero.

There are nine storage rooms at the job site, 3 more than stated in the D.I.B. Report. The importer stated that the

equipment capacity was for 3000 tons produce storage. The coils would have to be modified for storage temperature in all nine rooms to operate at -2°C.

A second letter of credit (SER/COM #8, next section) was issued and payment was made for coil replacement. All nine rooms are reported by the contractor to be operational. Therefore, the contractor must conclude that the equipment capability is satisfactory for his installation and the expected performance criteria is being met without the need for purchase of additional major equipment.

SERVICE AND MAINTENANCE

As stated in the introduction both parts and labor are necessary for equipment operation and future maintenance.

PARTS - Parts will be considered by two classifications. Major system components and maintenance or operational parts and supplies.

**System Components such as rings, shafts or compressor components are not necessary for major equipment overhaul. All parts itemized for this project are maintenance parts or supplies (see next paragraph). Considering that service labor to perform a major overhaul would come from the United States, the contractor agrees that no parts of this type need to be inventoried at the job site.

**Maintenance parts and supplies consist of parts that are used in the normal operation of equipment. Since there is not a universal parts numbering system Dunham-Bush must be relied upon to provide parts identification

information. Parts lists with the associated identification numbers are included as the following Exhibit:

Dunham-Bush METIC CONDENSING/UNIT Parts List	Exhibit H-1
Dunham-Bush METIC & D-Line Compressor Parts Catalog	Exhibit H-2
Dunham-Bush "HAH(M)" Air Handling Unit Parts List	Exhibit H-3
Dunham-Bush Model A9 Pump Parts Selection List	Exhibit H-7

Only one list of recommended spare parts was available for the contractor to review. The list was developed by Coolair Corporation and is itemized on the final invoice to the importer (see equipment identification section). A list of spares as recommended by the Dunham-Bush home office was not available.

Most items on the list have been verified by the contractor as being replacement parts for the equipment installed on the project. For reference see Exhibit H-1 page 11. Quantities are reasonable for an installation of this size and all parts have been received according to the contractor. For convenience in evaluating additional parts purchased the following parts price lists are included:

Dunham-Bush Reciprocating Compressor Parts Price List	Exhibit H-4
Dunahm-Bush Model A9 Centrifugal Pump Parts Prices	Exhibit H-8

LABOR - Labor may also be considered by the same two classifications as parts, major system component labor and maintenance labor.

**Service work for major overhauls or replacement of major system components was not found to be available

locally. According to the regional sales office for Dunham-Bush, in Athens, start-up and major systems repair labor would be supplied from the United States.

**Maintenance or operational labor must be supplied locally. The contractor recommends that this work be performed by a qualified service agent or individual familiar with Dunham-Bush equipment, such as Mr. Salah Botros used by Badi El Hanafy in Aiat. The initial step toward proper operation and maintenance is obtaining and following the manufacturer's O & M manuals. The following appropriate operating and maintenance manuals are included at the end of this report section:

Dunham-Bush Metic Compressor & Condensing Units	Exhibit H-5
Dunham-Bush 'AH' Air Handling Units	Exhibit H-6
Dunham-Bush type A9 Centrifugal Pumps	Exhibit H-9

SER/COM # 7 (United Refrigeration)
DUNHAM-BUSH LITERATURE (Mamoon)
EXHIBIT INDEX

EQUIPMENT	REPLACEMENT PARTS LIST	PARTS PRICES	OPERATIONAL & MAINTENANCE MANUALS	RECOMMENDED SPARE PARTS LIST		
WH151PHF5 Water Cooled Condenser	H-1 H-2	H-4	H-5			
WH200PHF5 Water Cooled Condeser	H-1 H-2	H-4	H-5			
HAH-100-Q Air Handlers	H-3		H-6			
Model A9 Pumps	H-7	H-8	H-9			

Exhibit H-1

FORM NO. 4033-1A

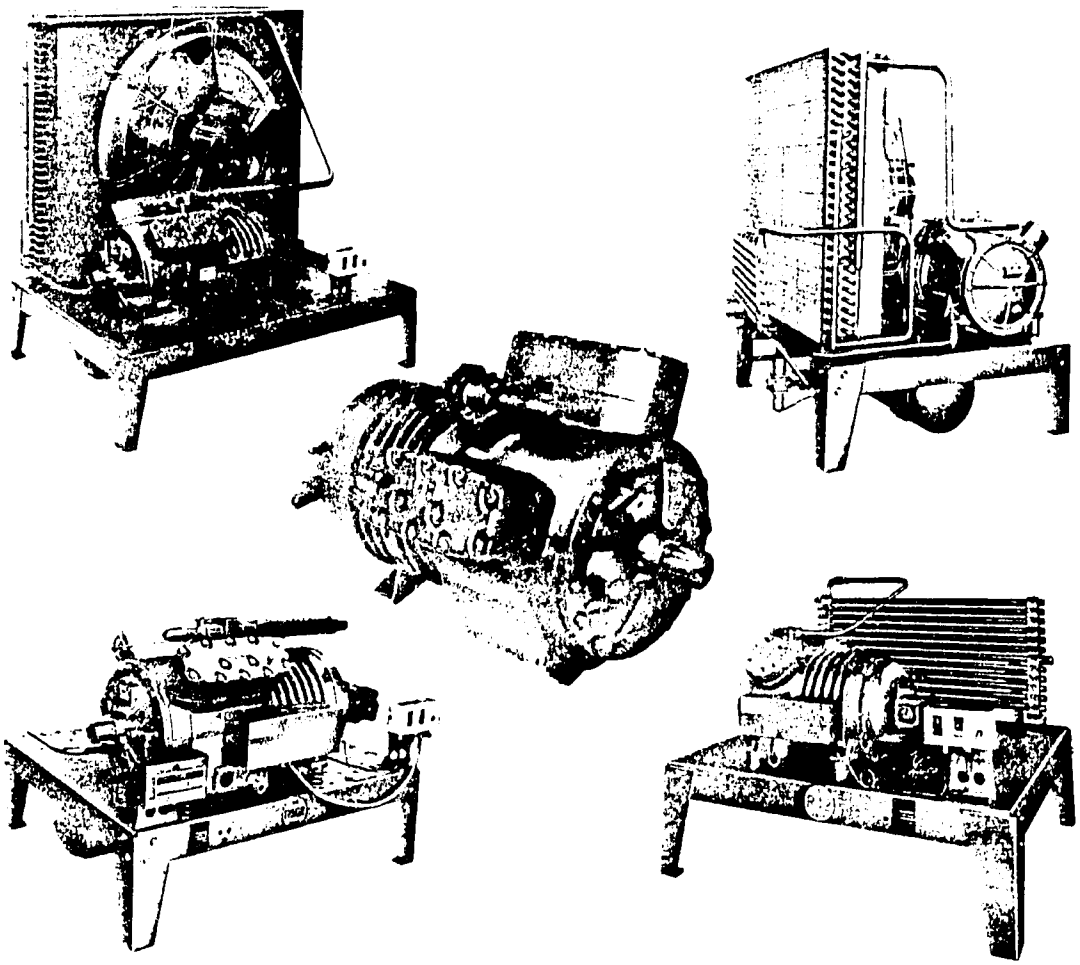

DUNHAM-BUSH

DENTAL COMPRESSOR UNIT

INSTALLATION

DUNHAM-BUSH, INC. • Harrisonburg, Virginia 22801, U.S.A.

1023

INDEX

	PAGE
'AH' AIR COOLED CONDENSING UNITS	
½ thru 1 HP	1
1½ and 2 HP	1
3 and 5 HP	2
7½ thru 15 HP	3
'AHD' AIR COOLED CONDENSING UNITS (DUAL CONDENSER)	
15 thru 20 HP	4
'AWH' AIR AND WATER COOLED CONDENSING UNITS	
1½ and 2 HP	5
3 and 5 HP	6
7½ thru 15 HP	7
'AWHD' AIR AND WATER COOLED CONDENSING UNITS (DUAL CONDENSER)	
15 and 20 HP	8
'WH' WATER COOLED CONDENSING UNITS	
½ thru 1 HP	9
1½ and 2 HP	9
3 and 5 HP	10
7½ thru 17½ HP	11
'EH' COMPRESSOR-RECEIVER UNITS	
½ thru 1 HP	12
1½ and 2 HP	12
3 and 5 HP	13
7½ thru 20 HP	14
APPENDIX 'A'	15
APPENDIX 'B'	16
APPENDIX 'C'	16
APPENDIX 'D'	16
APPENDIX 'E'	17

DUNHAM-BUSH RESERVES THE RIGHT TO MAKE CHANGES IN SPECIFICATIONS AND DESIGN WITHOUT NOTICE

GENERAL NOTES

IMPORTANT

1. This parts selection list applies to condensing units manufactured after and including the month of May, 1970. For condensing units manufactured prior to May, 1970, consult Form 4033. Manufactured date of condensing unit can be determined from the serial number.
2. For compressor parts, consult latest issue of Form 4032.
3. When ordering, specify part number and description.
4. Minimum order – $25.00 net.
5. Rebuilt parts are not available.
6. Parts specifications are subject to change without notice.
7. For terms of sale, refer to latest revision of Form 1278.
8. **Claims** – In the event of loss or damage in transit, the sales outlet should immediately place a claim against the delivering transporation company. Dunham-Bush cannot assume responsibility for such items when damage or loss is incurred during transit.
9. For parts not listed (as on special units) contact Parts Department, Harrisonburg, Va.

D/B-METIC SERIAL NUMBERING SYSTEM

COMPRESSOR

Serial Numbers have a coded significance. Here is an example:

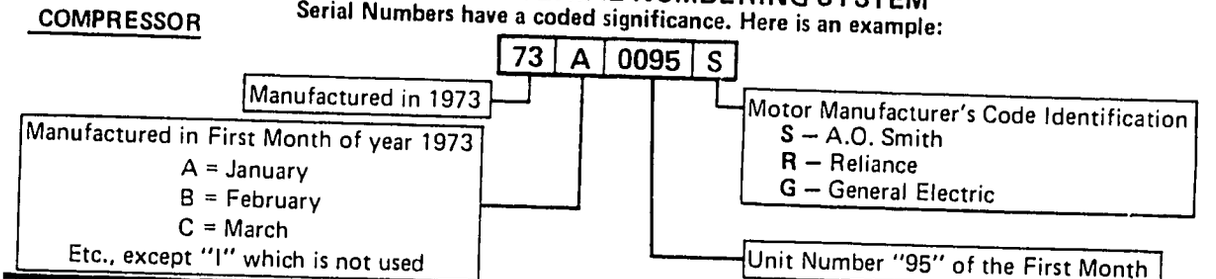

CONDENSING UNIT

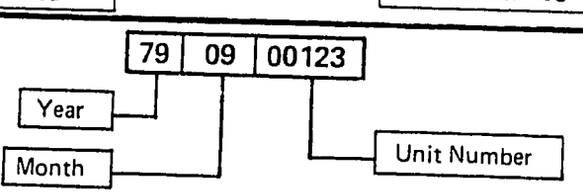

1024

'AH' AIR COOLED CONDENSING UNITS

"AH" RAISED BASE (½ thru 1 HP) (Fractionals) AIR COOLED CONDENSING UNITS

NOMINAL HORSEPOWER	REFRIGERANT	UNIT MODEL NUMBER	COMPRESSOR NUMBER	PUMP END	COMPR. SPRING MTG. STD. MTR. END	CONDENSER				RECEIVER (SEE NOTE 6)		FAN MOTOR & BRACKET	SHROUD			LOW PRESS. CNT.	HIGH PRESS. CNT.	BRACKET CONTROL	VALVE, R-OUT	GASKET, R-OUT VALVE	BASE - RAISED	LEG (RAISED BASE)	CRANKCASE HEATER
				GB 94	GB 119	GC 238	GC 167	GC 104	GB 115	GB 116	GB 90	SEE NOTE 1	GC 241	GC 170	GC 105	CNT 20 (NOTE 6)	CNT 29 (NOTE 6)	650B395	VAL 435	GA 467	BAS 115S	LEG 77	SEE NOTE 3
½	R-12	AH5HCL	5HCL	2	1	1			1			1	1			1	1	2	1	1	1	4	1
¾	R-12	AH9HCL	9HCL	2	1		1			1		2		1		1	1	2	1	1	1	4	1
1	R-12	AH11HCL	11HCL	2	1			1			1	2			1	1	1	2	1	1	1	4	1

"AH" RAISED BASE (1½ & 2 HP) AIR COOLED CONDENSING UNITS

NOMINAL HP	REFRIGERANT	UNIT MODEL NUMBER	COMPRESSOR NUMBER	COMP. MTG. SPACER	CONDENSER		RECEIVER (SEE NOTE 6)	FAN, MOTOR & MTR MOUNT	SHROUD	LOW PRESS. CNT.	HIGH PRESS. CNT.	BRACKET	BASE	LEG (RAISED BASE)	VALVE R-OUT	GASKET, R-OUT VALVE	FUSIBLE PLUG	CRANKCASE HEATER	OPTIONAL ITEMS	COMP. SPRING MOUNTS	RELIEF VALVE	RECEIVER HEATER	RECEIVER HEATER THTS'T.	CHECK VALVE HEATED RCVR.
				GA 500	CDS332	CDS333	REC 83	SEE NOTE 1	SHR 14	CNT 20	CNT 29	650B395	BAS 115S	LEG 77	VAL 435	GA 467	PLU 135	SEE NOTE 3		SEE NOTE 2	VAL 685T2	SEE NOTE 4	CNT 229	VAL 387
1½	R-12	AH15H	15H/CF/LF	4	1		1	1	1	1	1	2	1	4	1	1	1	1		4	1	1	1	1
		AH15C	15C/ELF	4	1		1	1	1	1	1	2	1	4	1	1	1	1		4	1	1	1	1
		AH15L	15L	4	1		1	1	1	1	1	2	1	4	1	1	1	1		4	1	1	1	1
	R-22	AH15CF	15H/CF/LF	4	1		1	1	1	1	1	2	1	4	1	1	1	1		4	1	1	1	1
	R-502	AH15LF	15H/CF/LF	4	1		1	1	1	1	1	2	1	4	1	1	1	1		4	1	1	1	1
		AH15ELF	15C/ELF	4	1		1	1	1	1	1	2	1	4	1	1	1	1		4	1	1	1	1
2	R-12	AH20H	20H/CF/LF	4		1	1	1	1	1	1	2	1	4	1	1	1	1		4	1	1	1	1
		AH20C	20C/ELF	4		1	1	1	1	1	1	2	1	4	1	1	1	1		4	1	1	1	1
		AH20L	20L	4		1	1	1	1	1	1	2	1	4	1	1	1	1		4	1	1	1	1
	R-22	AH20HF	20HF	4		1	1	1	1	1	1	2	1	4	1	1	1	1		4	1	1	1	1
		AH20CF	20H/CF/LF	4		1	1	1	1	1	1	2	1	4	1	1	1	1		4	1	1	1	1
	R-502	AH20LF	20H/CF/LF	4		1	1	1	1	1	1	2	1	4	1	1	1	1		4	1	1	1	1
		AH20ELF	20C/ELF	4		1	1	1	1	1	1	2	1	4	1	1	1	1		4	1	1	1	1

NOTES:

1. For selection of fan motor, fan blade and fan motor mount, select condenser size for reference and consult Appendix 'A'.
2. Optional compressor spring mounts may be selected from Appendix 'C'.
3. Crankcase heaters are selected according to voltage. For 120V, use heater number GA 1522 (Blue Wires); for 240V, use heater number GA 1521 (Red Wires).
4. Receiver heaters are selected according to voltage. For 120V, use heater number HTR 94T6; for 230V, use heater number HTR 94T5. "Cartridge Type".
5. Vessel only. For receiver sizes, see Appendix 'E'.
6. Units prior to 1980 with a single dual pressure control, use CNT22.

1025

'AH' AIR COOLED CONDENSING UNITS

"AH" RAISED BASE (3 & 5 HP) AIR COOLED CONDENSING UNITS

NOMINAL HP	REFRIGERANT	UNIT MODEL NUMBER	COMPRESSOR NUMBER	COMP. MTG. SPACER		CONDENSER		RECEIVER (SEE NOTE 6)		FAN, MOTOR & MTR. MOUNT	SHROUD	OIL FAILURE CNT.	LOW PRESS. CNT.	HIGH PRESS. CNT.	BRACKET, CONTROL	BASE	LEG (RAISED BASE)	VALVE R-OUT		GASKET, R-OUT VALVE	FUSIBLE PLUG	CRANKCASE HEATER	OPTIONAL ITEMS	COMP. SPRING MOUNTS	RELIEF VALVE	RECEIVER HEATER	RECEIVER HEATER THTS'T.	CHECK VALVE-HTD. RCV'R.
				GA 500	GA 1774	CDS 334	CDS 335	REC 81	REC 82	SEE NOTE 1	SHR 15	CNT 106	CNT 20 (NOTE 6)	CNT 29 (NOTE 6)	650B395	BAS 117S	LEG 77	VAL 332	VAL 331	GA 467	PLU 135	SEE NOTE 3		SEE NOTE 2	VAL 685T2	SEE NOTE 4	CNT 229	VAL 389
3	R-12	AH30H	30H/LF	4		1		1		1	1		1	1	2	1	4	1		1	1	1		4	1	1	1	1
		AH32C	32C/ELF	4		1		1		1	1		1	1	2	1	4	1		1	1	1		4	1	1	1	1
		AH30C	30C/ELF		4	1		1		1	1		1	1	2	1	4	1		1	1	1		4	1	1	1	1
		AH30L	30L		4	1		1		1	1		1	1	2	1	4	1		1	1	1		4	1	1	1	1
	R-22	AH30HF	30HF	4		1		1		1	1		1	1	2	1	4	1		1	1	1		4	1	1	1	1
		AH30CF	30CF	4		1		1		1	1		1	1	2	1	4	1		1	1	1		4	1	1	1	1
	R-502	AH30LF	30H/LF	4		1		1		1	1		1	1	2	1	4	1		1	1	1		4	1	1	1	1
		AH32ELF	32C/ELF	4		1		1		1	1		1	1	2	1	4	1		1	1	1		4	1	1	1	1
		AH30ELF	30C/ELF		4	1		1		1	1		1	1	2	1	4	1		1	1	1		4	1	1	1	1
5	R-12	AH50H	50H/LF		4		1		1	1	1		2	1	4		1	1	1		1	1		4	1	1	1	1
		AH50C	50C/ELF		4		1		1	1	1		1	1	2	1	4		1	1	1	1		4	1	1	1	1
		AH51PL	51PL		4		1		1	1	1	1	1	1	3	1	4		1	1	1	1		4	1	1	1	1
	R-22	AH52HF	52HF		4		1		1	1	1		1	1	2	1	4		1	1	1	1		4	1	1	1	1
		AH50CF	50CF		4		1		1	1	1		1	1	2	1	4		1	1	1	1		4	1	1	1	1
	R-502	AH50LF	50H/LF		4		1		1	1	1		1	1	2	1	4		1	1	1	1		4	1	1	1	1
		AH50ELF	50C/ELF		4		1		1	1	1		1	1	2	1	4		1	1	1	1		4	1	1	1	1

NOTES:

1. For selection of fan motor, fan blade and fan motor mount, select condenser size for reference and consult Appendix 'A'.
2. Optional compressor spring mounts may be selected from Appendix 'C'.
3. Crankcase heaters are selected according to voltage. For 120V, use heater number GA 1522 (Blue Wires); for 240V, use heater number GA 1521 (Red Wires).
4. Receiver heaters are selected according to voltage. For 120V, use heater number HTR 94T6; for 230V, use heater number HTR 94T5. "Cartridge Type".
5. Vessel only. For receiver sizes see Appendix 'E'.
6. Units prior to 1980 with a single dual pressure control, use CNT22.

'AH' AIR COOLED CONDENSING UNITS

"AH" RAISED BASE (7½ thru 15 HP) AIR COOLED CONDENSING UNITS

NOMINAL HP	REFRIGERANT	UNIT MODEL NUMBER	COMPRESSOR NUMBER	COMPr. MTG. SPACER	CONDENSER		RECEIVER (SEE NOTE 6)	FAN, MOTOR & MTR. MOUNT	SHROUD	LOW PRESS. CNT.	HIGH PRESS. CNT.	OIL FAIL. CNT.	BRACKET, CONTROL	BASE	LEG (RAISED BASE)	VALVE R-OUT	GASKET, R-OUT VALVE	FUSIBLE PLUG	CRANKCASE HEATER	OPTIONAL ITEMS	COMP. SPRING MOUNTS	RELIEF VALVE	RECEIVER HEATER	RECEIVER HEATER THTS'T.	CHECK VALVE-HTD. RCV'R.
				GA 1774	CDS 336	CDS 337	REC 82	SEE NOTE 1	SHR 16	CNT 20 (NOTE 6)	CNT 29 (NOTE 6)	CNT 106	650B395	BAS 1195	LEG 77	VAL 331	GA 467	PLU 135	SEE NOTE 3		SEE NOTE 2	VAL 685T2	SEE NOTE 4	CNT 229	VAL 389
7½	R-12	AH76PH	76PH/C/LF	4	1		1	1	1	1	1	1	2	1	4	1	1	1	1		4	1	1	1	1
		AH76PL	76PL	4	1		1	1	1	1	1	1	3	1	4	1	1	1	1		4	1	1	1	1
		AH77PC	77PC/ELF	4	1		1	1	1	1	1	1	3	1	4	1	1	1	1		4	1	1	1	1
	R-22	AH75HF	75HF	4	1		1	1	1	1	1		2	1	4	1	1	1	1		4	1	1	1	1
		AH75CF	75CF	4	1		1	1	1	1	1		2	1	4	1	1	1	1		4	1	1	1	1
	R-502	AH76PLF	76PH/C/LF	4	1		1	1	1	1	1	1	3	1	4	1	1	1	1		4	1	1	1	1
		AH77PELF	77PC/ELF	4	1		1	1	1	1	1	1	3	1	4	1	1	1	1		4	1	1	1	1
	R-12	AH101PH	101PH/C/ELF	4		1	2	1	1	1	1	1	3	1	4	1	1	1	1		4	1	1	1	1
		AH101PC	101PH/C/ELF	4	1		1	1	1	1	1	1	3	1	4	1	1	1	1		4	1	1	1	1
		AH104PL	104PL	4	1		1	1	1	1	1	1	3	1	4	1	1	1	1		4	1	1	1	1
	R-22	AH100PHF	100PHF	4		1	2	1	1	1	1	1	3	1	4	1	1	1	1		4	1	1	1	1
		AH111PCF	111PHF/CF	4	1		1	1	1	1	1	1	3	1	4	1	1	1	1		4	1	1	1	1
	R-502	AH101PELF	101PH/C/ELF	4	1		1	1	1	1	1	1	3	1	4	1	1	1	1		4	1	1	1	1
15	R-12	AH154PC	154PH/C/ELF	4		1	2	1	1	1	1	1	3	1	4	1	1	1	1		4	1	1	1	1
	R-502	AH154PELF	154PH/C/ELF	4		1	2	1	1	1	1	1	3	1	4	1	1	1	1		4	1	1	1	1

NOTES:

1. For selection of fan motor, fan blade and fan motor mount, select condenser size for reference and consult Appendix 'A'.
2. Optional compressor spring mounts may be selected from Appendix 'C'.
3. Crankcase heaters are selected according to voltage. For 120V, use heater number GA 1522 (Blue Wires); for 240V, use heater number GA 1521 (Red Wires).
4. Receiver heaters are selected according to voltage. For 120V, use heater number HTR 94T6; for 230V, use heater number HTR 94T5. "Cartridge Type".
5. Vessel only. For receiver sizes see Appendix 'E'.
6. Units prior to 1980 with a single dual pressure control, use CNT22.

'AHD' AIR COOLED CONDENSING UNITS

"AHD" DUAL CONDENSER (15 thru 20 HP) AIR COOLED CONDENSING UNITS

NOMINAL HP	REFRIGERANT	UNIT MODEL NUMBER	COMPRESSOR NUMBER	COMP. MTG. SPACER	CONDENSER		RECEIVER (SEE NOTE 5)	FAN, MOTOR & MTR. MOUNT	SHROUD	LOW PRESS. CNT.	HIGH PRESS. CNT.	OIL FAIL. CNT.	BRACKET, CONTROL	VASE	LEG	VALVE R-OUT	GASKET, R-OUT VALVE	FUSIBLE PLUG	CRANKCASE HEATER	OPTIONAL ITEMS	COMP. SPRING MOUNTS	RELIEF VALVE	RECEIVER HEATER	RECEIVER HEATER THTS'T	CHECK VALVE-HTD. RCV'R.
				GA 1774	CDS 336	CDS 337	REC 82	SEE NOTE 1	SHR 16	CNT 20(NOTE 6)	CNT 29(NOTE 6)	CNT 106	65GB395	BAS 119S	LEG 81	VAL 331	GA 467	PLU 135	SEE NOTE 3		SEE NOTE 2	VAL 685T2	SEE NOTE 4	CNT 229	VAL 389
15	R-12	AHD154PH	154PHC/ELF	4	2		2	2	2	2	2	2	3	2	4	1	1	1	1		4	1	1	1	1
	R-22	AHD151PHF	151PHF/CF	4	2		2	2	2	1	1	1	3	2	4	1	1	1	1		4	1	1	1	1
		AHD151PCF	151PHF/CF	4	2		2	2	2	1	1	1	3	2	4	1	1	1	1		4	1	1	1	1
17½	R-22	AHD201PCF	201PHF/CF	4	2		2	2	2	1	1	1	3	2	4	1	1	1	1		4	1	1	1	1
		AHD201PHF	201PHF/CF	4		2	2	2	2	1	1	1	3	2	4	1	1	1	1		4	1	1	1	1
20	R-22	AHD204PHF	204PHF/CF	4		2	2	2	2	1	1	1	3	2	4	1	1	1	1		4	1	1	1	1
		AHD204PCF	204PHF/CF	4	2		2	2	2	1	1	1	3	2	4	1	1	1	1		4	1	1	1	1

NOTES:

1. For selection of fan motor, fan blade and fan motor mount, select condenser size for reference and consult Appendix 'A'.
2. Optional compressor spring mounts may be selected from Appendix 'C'.
3. Crankcase heaters are selected according to voltage. For 120V, use heater number GA 1522 (Blue Wires); for 240V, use heater number GA 1521 (Red Wires).
4. Receiver heaters are selected according to voltage. For 120V, use heater number HTR 94T6; for 230V, use heater number HTR 94T5. "Cartridge Type".
5. Vessel only. For receiver sizes see Appendix 'E'.
6. Units prior to 1980 with a single dual pressure control, use CNT22.

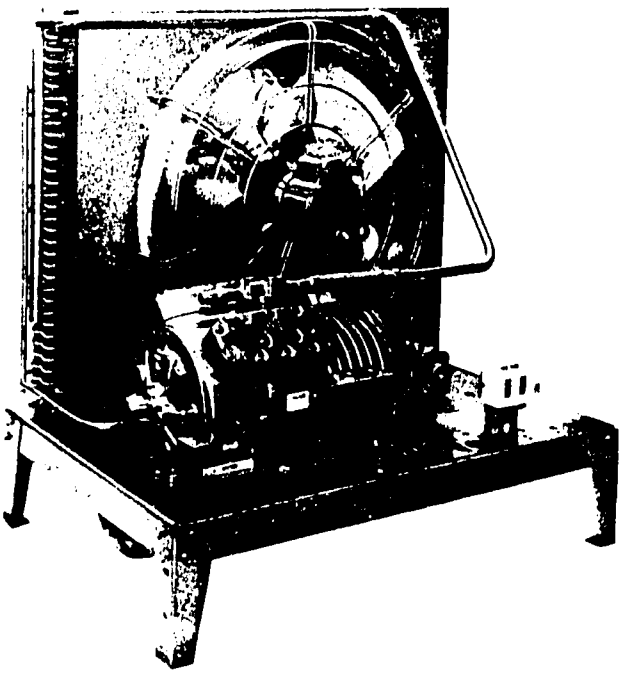

'AH' UNIT

1028

'AWH' AIR AND WATER COOLED CONDENSING UNITS

"AWH" RAISED BASE
(1½ & 2 HP)
AIR & WATER COOLED
CONDENSING UNITS

NOMINAL HP	REFRIGERANT	COMPRESSOR NUMBER	UNIT MODEL NUMBER	COMP. MTG. SPACER	AIR COOLED CONDENSER		WATER COOLED CONDENSER	RECEIVER (SEE NOTE 7)	FAN, MOTOR & MTR. MOUNT	SHROUD	WATER VALVE (SEE NOTE 2)	LOW PRESS. CNT.	HIGH PRESS. CNT	BRACKET, CONTROL	BASE	LEG (RAISED BASE)	VALVE R-OUT	GASKET, R-OUT VALVE	FUSIBLE PLUG	CRANKCASE HEATER	OPTIONAL ITEMS	COMP. SPRING MOUNTS	RELIEF VALVE	RECEIVER HEATER	RECEIVER HEATER THTST.	CHECK VALVE-HTD. RCV'R.
				GA 500	CDS 332	CDS 333	CIC 75	REC 83	SEE NOTE 1	SHR 14	VAL 159	CNT 20 (NOTE 7)	CNT 29 (NOTE 7)	650B395	BAS115S	LEG 77	VAL 435	GA 467	PLU 135	SEE NOTE 4		SEE NOTE 3	VAL 685T2	SEE NOTE 5	CNT 229	VAL 387
1½	R-12	AWH15H	15H/CF/LF	4	1		1	1	1	1	1	1	1	2	1	4	1	1	1	1		4	1	1	1	1
		AWH15C	15C/ELF	4	1		1	1	1	1	1	1	1	2	1	4	1	1	1	1		4	1	1	1	1
		AWH15L	15L	4	1		1	1	1	1	1	1	1	2	1	4	1	1	1	1		4	1	1	1	1
	R-22	AWH15CF	15H/CF/LF	4	1		1	1	1	1	1	1	1	2	1	4	1	1	1	1		4	1	1	1	1
	R-502	AWH15LF	15H/CF/LF	4	1		1	1	1	1	1	1	1	2	1	4	1	1	1	1		4	1	1	1	1
		AWH15ELF	15C/ELF	4	1		1	1	1	1	1	1	1	2	1	4	1	1	1	1		4	1	1	1	1
2	R-12	AWH20H	20H/CF/LF	4		1	1	1	1	1	1	1	1	2	1	4	1	1	1	1		4	1	1	1	1
		AWH20C	20C/ELF	4		1	1	1	1	1	1	1	1	2	1	4	1	1	1	1		4	1	1	1	1
		AWH20L	20L	4		1	1	1	1	1	1	1	1	2	1	4	1	1	1	1		4	1	1	1	1
	R-22	AWH20HF	20HF	4		1	1	1	1	1	1	1	1	2	1	4	1	1	1	1		4	1	1	1	1
		AWH20CF	20H/CF/LF	4		1	1	1	1	1	1	1	1	2	1	4	1	1	1	1		4	1	1	1	1
	R-502	AWH20LF	20H/CF/LF	4		1	1	1	1	1	1	1	1	2	1	4	1	1	1	1		4	1	1	1	1
		AWH20ELF	20C/ELF	4		1	1	1	1	1	1	1	1	2	1	4	1	1	1	1		4	1	1	1	1

NOTES:

1. For selection of fan motor, fan blade and fan motor mount, select condenser size for reference and consult Appendix 'A'.
2. For size of water valves, consult Appendix 'D'.
3. Optional compressor spring mounts may be selected from Appendix 'C'.
4. Crankcase heaters are selected according to voltage. For 120V, use heater number GA 1522 (Blue Wires); for 240V, use heater number GA 1521 (Red Wires).
5. Receiver heaters are selected according to voltage. For 120V, use heater number HTR 94T6; for 230V, use heater number HTR 94T5. "Cartridge Type".
6. Vessel only. For receiver sizes see Appendix 'E'.
7. Units prior to 1980 with a single dual pressure control, use CNT22.

1029

'AWH' AIR AND WATER COOLED CONDENSING UNITS

"AWH" RAISED BASE (3 & 5 HP) AIR & WATER COOLED CONDENSING UNITS

NOMINAL HP	REFRIGERANT	UNIT MODEL NUMBER	COMPRESSOR NUMBER	COMP. MTG. SPACER		AIR COOLED CONDENSER		WATER COOLED CONDENSER		RECEIVER (SEE NOTE 7)		FAN, FAN MOTOR & MTR. MOUNT	SHROUD	CITY WATER VALVE (SEE NOTE 2)	OIL FAIL. CNT.	LOW PRESS. CNT.	HIGH PRESS. CNT.	BRACKET, CONTROL	BASE	LEG (RAISED BASE)	VALVE R-OUT		GASKET, R-OUT VALVE	FUSIBLE PLUG	CRANKCASE HEATER	OPTIONAL ITEMS	COMP. SPRING MOUNTS	RELIEF VALVE	RECEIVER HEATER	RECEIVER HEATER THTS'T.	CHECK VALVE-HTD. RCV'R.
				GA 500	GA 1774	CDS 334	CDS 335	CIC 100	CIC 150	REC 81	REC 82	SEE NOTE 1	SHROUD	VAL 159	CNT 106	CNT 20 (NOTE 7)	CNT 29 (NOTE 7)	650B395	BAS 117S	LEG 77	VAL 332	VAL 331	GA 467	PLU 135	SEE NOTE 4		SEE NOTE 3	VAL 685T2	SEE NOTE 5	CNT 229	VAL 389
3	R-12	AWH30H	30H/LF	4		1		1		1		1	1	1		1	1	2	1	4	1		1	1	1		4	1	1	1	1
		AWH32C	32C/ELF	4		1		1		1		1	1	1		1	1	2	1	4	1		1	1	1		4	1	1	1	1
		AWH30C	30C/ELF		4	1		1		1		1	1	1		1	1	2	1	4	1		1	1	1		4	1	1	1	1
		AWH30L	30L		4	1		1		1		1	1	1		1	1	2	1	4	1		1	1	1		4	1	1	1	1
	R-22	AWH30HF	30HF	4		1		1		1		1	1	1		1	1	2	1	4	1		1	1	1		4	1	1	1	1
		AWH30CF	30CF	4		1		1		1		1	1	1		1	1	2	1	4	1		1	1	1		4	1	1	1	1
	R-502	AWH30LF	30H/LF	4		1		1		1		1	1	1		1	1	2	1	4	1		1	1	1		4	1	1	1	1
		AWH32ELF	32C/ELF	4		1		1		1		1	1	1		1	1	2	1	4	1		1	1	1		4	1	1	1	1
		AWH30ELF	30C/ELF		4	1		1		1		1	1	1		1	1	2	1	4	1		1	1	1		4	1	1	1	1
5	R-12	AWH50H	50H/LF		4		1		1		1	1	1	1		1	1	2	1	4		1	1	1	1		4	1	1	1	1
		AWH50C	50C/ELF		4		1		1		1	1	1	1		1	1	2	1	4		1	1	1	1		4	1	1	1	1
		AWH51PL	51PL		4		1		1		1	1	1	1	1	1	1	2	1	4		1	1	1	1		4	1	1	1	1
	R-22	AWH52HF	52HF		4		1		1		1	1	1	1		1	1	2	1	4		1	1	1	1		4	1	1	1	1
		AWH50CF	50CF		4		1		1		1	1	1	1		1	1	2	1	4		1	1	1	1		4	1	1	1	1
	R-502	AWH50LF	50H/LF		4		1		1		1	1	1	1		1	1	2	1	4		1	1	1	1		4	1	1	1	1
		AWH50ELF	50C/ELF		4		1		1		1	1	1	1		1	1	2	1	4		1	1	1	1		4	1	1	1	1

NOTES:

1. For selection of fan motor, fan blade and fan motor mount, select condenser size for reference and consult Appendix 'A'.
2. For size of water valves, consult Appendix 'D'.
3. Optional compressor spring mounts may be selected from Appendix 'C'.
4. Crankcase heaters are selected according to voltage. For 120V, use heater number GA 1522 (Blue Wires); for 240V, use heater number GA 1521 (Red Wires).
5. Receiver heaters are selected according to voltage. For 120V, use heater number HTR 94T6; for 230V, use heater number HTR 94T5. "Cartridge Type".
6. Vessel only. For receiver sizes see Appendix 'E'.
7. Units prior to 1980 with a single dual pressure control, use CNT22.

'AWH' AIR AND WATER COOLED CONDENSING UNITS

"AWH" RAISED BASE
(7½ thru 15 HP)
AIR & WATER COOLED
CONDENSING UNITS

				COMP. MTG. SPACER	AIR COOLED CONDENSER			WATER COOLED CONDENSER			RECEIVER (SEE NOTE 7)	FAN, MOTOR & MTR. MOUNT	SHROUD	CITY WATER VALVE	(SEE NOTE 2)	LOW PRESS. CNT.	HIGH PRESS CNT.	OIL FAIL. CNT.	BRACKET, CONTROL	BASE	LEG (RAISED BASE)	VALVE R-OUT	GASKET, R-OUT VALVE	FUSIBLE PLUG	CRANKCASE HEATER	OPTIONAL ITEMS	COMP. SPRING MOUNTS	RELIEF VALVE	RECEIVER HEATER	RECEIVER HEATER THTS'T.	CHECK VALVE-HTD' RCV'R.
NOMINAL HP	REFRIGERANT	UNIT MODEL NUMBER	COMPRESSOR NUMBER	GA 1774	CDS 336	CDS 337	CIC 200	CIC 300	CIC 550	REC 82	SEE NOTE 1	SHR 16	VAL 159	VAL 160	CNT 20 (NOTE 7)	CNT 29 (NOTE 7)	CNT 106	650B395	BAS 119S	LEG 77	VAL 331	GA 467	PLU 135	SEE NOTE 4		SEE NOTE 3	VAL 685T2	SEE NOTE 5	CNT 229	VAL 389
7½	R-12	AWH76PH	76PH/C/LF	4	1		1			1	1	1	1		1	1	1	3	1	4	1	1	1	1		4	1	1	1	1
		AWH76PL	76PL	4	1		1			1	1	1	1		1	1	1	3	1	4	1	1	1	1		4	1	1	1	1
		AWH77PC	77PC/ELF	4	1		1			1	1	1	1		1	1	1	3	1	4	1	1	1	1		4	1	1	1	1
	R-22	AWH75HF	75HF	4	1		1			1	1	1	1		1	1		2	1	4	1	1	1	1		4	1	1	1	1
		AWH75CF	75CF	4	1		1			1	1	1	1		1	1		2	1	4	1	1	1	1		4	1	1	1	1
	R-502	AWH76PLF	76PH/C/LF	4	1		1			1	1	1	1		1	1	1	3	1	4	1	1	1	1		4	1	1	1	1
		AWH77PELF	77PC/ELF	4	1		1			1	1	1	1		1	1	1	3	1	4	1	1	1	1		4	1	1	1	1
10	R-12	AWH101PH	101PH/C/ELF	4		1		1		2	1	1	1		1	1	1	3	1	4	1	1	1	1		4	1	1	1	1
		AWH101PC	101PH/C/ELF	4	1			1		1	1	1	1		1	1	1	3	1	4	1	1	1	1		4	1	1	1	1
		AWH104PL	104PL	4	1			1		1	1	1	1		1	1	1	3	1	4	1	1	1	1		4	1	1	1	1
	R-22	AWH100PHF	100PHF	4		1		1		2	1	1	1		1	1	1	3	1	4	1	1	1	1		4	1	1	1	1
		AWH111PCF	111PHF/CF	4	1			1		1	1	1	1		1	1	1	3	1	4	1	1	1	1		4	1	1	1	1
	R-502	AWH101PELF	101PHC/ELF	4	1			1		1	1	1	1		1	1	1	3	1	4	1	1	1	1		4	1	1	1	1
15	R-12	AWH154PC	154PH/C/ELF	4		1			1	2	1	1		1	1	1	1	3	1	4	1	1	1	1		4	1	1	1	1
	R-502	AWH154PELF	154PH/C/ELF	4		1			1	2	1	1		1	1	1	1	3	1	4	1	1	1	1		4	1	1	1	1

NOTES:

1. For selection of fan motor, fan blade and fan motor mount, select condenser size for reference and consult Appendix 'A'.
2. For size of water valves, consult Appendix 'D'.
3. Optional compressor spring mounts may be selected from Appendix 'C'.
4. Crankcase heaters are selected according to voltage. For 120V, use heater number GA 1522 (Blue Wires); for 240V, use heater number GA 1521 (Red Wires).
5. Receiver heaters are selected according to voltage. For 120V, use heater number HTR 94T6; for 230V, use heater number HTR 94T5. "Cartridge Type".
6. Vessel only. For receiver sizes see Appendix 'E'.
7. Units prior to 1980 with a single dual pressure control, use CNT22.

'AWHD' AIR AND WATER COOLED CONDENSING UNITS

"AWHD" DUAL CONDENSER (15 thru 20 HP) AIR & WATER COOLED CONDENSING UNITS

NOMINAL HP	REFRIGERANT	UNIT MODEL NUMBER	COMPRESSOR NUMBER	COMP. MTG. SPACER	AIR COOLED CONDENSER		WATER COOLED CONDENSER		RECEIVER (SEE NOTE 7)	FAN, FAN MOTOR & MTR. MOUNT	SHROUD	CITY WATER VALVE (SEE NOTE 2)		LOW PRESS. CNT.	HIGH PRESS. CNT.	OIL FAIL. CNT.	BRACKET, CONTROL	BASE	LEG (RAISED BASE)	VALVE R-OUT	GASKET, R-OUT VALVE	FUSIBLE PLUG	CRANKCASE HEATER	OPTIONAL ITEMS	COMP. SPRING MOUNTS	RELIEF VALVE	RECEIVER HEATER	RECEIVER HEATER THTS'T.	CHECK VALVE-HTD. RCV'R.
				GA 1774	CDS 336	CDS 337	CIC 550	CIC 750	REC 82	SEE NOTE 1	SHR 16	VAL 160	VAL 161	CNT 20(NOTE 7)	CNT 29 (NOTE 7)	CNT 106	650B395	BAS 119S	LEG 81	VAL 331	GA 467	PLU 135	SEE NOTE 4		SEE NOTE 3	VAL 685T2	SEE NOTE 5	CNT 229	VAL 389
15	R-12	AWHD154PH	154PH/C/ELF	4	2		1		2	2	2	1		1	1	1	3	2	4	1	1	1	1		4	1	1	1	1
	R-22	AWHD151PHF	151PHF/CF	4	2		1		2	2	2	1		1	1	1	3	2	4	1	1	1	1		4	1	1	1	1
		AWHD151PCF	151PHF/CF	4	2		1		2	2	2	1		1	1	1	3	2	4	1	1	1	1		4	1	1	1	1
17½	R-22	AWHD201PCF	201PHF/CF	4	2		1		2	2	2	1		1	1	1	3	2	4	1	1	1	1		4	1	1	1	1
		AWHD201PHF	201PHF/CF	4		2	1		2	2	2	1		1	1	1	3	2	4	1	1	1	1		4	1	1	1	1
20	R-22	AWHD204PHF	204PHF/CF	4		2	1		2	2	2	1		1	1	1	3	2	4	1	1	1	1		4	1	1	1	1
		AWHD204PCF	204PHF/CF	4	2			1	2	2	2		1	1	1	1	3		4	1	1	1	1		4	1	1	1	1

NOTES:

1. For selection of fan motor, fan blade and fan motor mount, select condenser size for reference and consult Appendix 'A'.
2. For size of water valves, consult Appendix 'D'.
3. Optional compressor spring mounts may be selected from Appendix 'C'.
4. Crankcase heaters are selected according to voltage. For 120V, use heater number GA 1522 (Blue Wires); for 240V, use heater number GA 1521 (Red Wires).
5. Receiver heaters are selected according to voltage. For 120V, use heater number HTR 94T6; for 230V, use heater number HTR 94T5. "Cartridge Type".
6. Vessel only. For receiver sizes see Appendix 'E'.
7. Units prior to 1980 with a single dual pressure control, use CNT22.

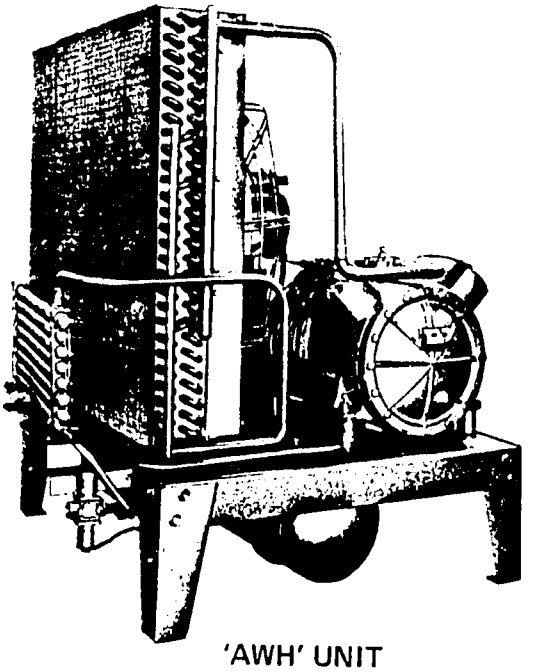

'AWH' UNIT

'WH' WATER COOLED CONDENSING UNITS

'WH' RAISED BASE (½ thru 1 HP) (Fractionals) WATER COOLED CONDENSING UNITS

NOMINAL HP	REFRIGERANT	UNIT MODEL NUMBER	COMPRESSOR NUMBER	PUMP END: GB 94	MOTOR END: GB 119	CONDENSER: CIC 50	CONDENSER: CIC 75	CONDENSER: CIC 100	RECEIVER (SEE NOTE 7): GB 115	RECEIVER (SEE NOTE 7): GB 116	RECEIVER (SEE NOTE 7): GB 90	CITY WATER VALVE (SEE NOTE 1): VAL 159	LOW PRESS. CNT.: CNT 20 (NOTE 7)	HIGH PRESS. CNT.: CNT 29 (NOTE 7)	BRACKET, CONTROL: 650B395	VALVE, R-OUT: VAL 435	GASKET, R-OUT VALVE: GA 467	BASE-RAISED: BAS 115S	LEG (RAISED BASE): LEG 77	CRANKCASE HEATER: SEE NOTE 3
½	R-12	WH5HCL	5HCL	2	1	1			1			1	1	1	2	1	1	1	4	1
¾	R-12	WH9HCL	9HCL	2	1		1			1		1	1	1	2	1	1	1	4	1
1	R-12	WH11HCL	11HCL	2	1			1			1	1	1	1	2	1	1	1	4	1

"WH" RAISED BASE (1½ & 2 HP) WATER COOLED CONDENSING UNITS

NOMINAL HP	REFRIGERANT	UNIT MODEL NUMBER	COMPRESSOR NUMBER	COMP. MTG. SPACER: GA 500	CONDENSER: CIC 150	CONDENSER: CIC 200	RECEIVER (SEE NOTE 7): REC 83	TOWER WATER VALVE (SEE NOTE1): VAL 159	CITY WATER VALVE (SEE NOTE 1): VAL 159	LOW PRESS. CNT: CNT 20 (NOTE 7)	HIGH PRESS. CNT: CNT 29 (NOTE 7)	BRACKET CONTROL: 650B395	BASE: BAS 115S	LEG (RAISED BASE): LEG 77	VALVE R-OUT: VAL 435	GASKET, R-OUT VALVE: GA 467	FUSIBLE PLUG: PLU 135	CRANKCASE HEATER: SEE NOTE 3	BODY COOLING FAN: SEE NOTE 2	OPTIONAL ITEMS: COMP. SPRING MOUNTS: SEE NOTE 4	RELIEF VALVE: VAL 685T2	RECEIVER HEATER: SEE NOTE 5	REC. HEATER THERMOSTAT: CNT 229	CHECK VALVE-HTD. RCV'R.: VAL 389
1½	R-12	WH15H	15H/CF/LF	4	1		1	1	1	1	1	2	1	4	1	1	1	1		4	1	1	1	1
		WH15C	15C/ELF	4	1		1	1	1	1	1	2	1	4	1	1	1	1		4	1	1	1	1
		WH15L	15L	4	1		1	1	1	1	1	2	1	4	1	1	1	1		4	1	1	1	1
	R-22	W15CF	15H/CF/LF	4	1		1	1	1	1	1	2	1	4	1	1	1	1		4	1	1	1	1
	R-502	WH15ELF	15H/CF/LF	4	1		1	1	1	1	1	2	1	4	1	1	1	1		4	1	1	1	1
		WH15ELF	15C/ELF	4	1	1	1	1	1	1	2	1	4	1	1	1	1	1		4	1	1	1	1
2	WH20H R-12	20H/CF/LF		4		1	1	1	1	1	1	2	1	4	1	1	1	1		4	1	1	1	1
		WH20C	20C/ELF	4		1	1	1	1	1	1	2	1	4	1	1	1	1		4	1	1	1	1
		WH20L	20L	4	1		1	1	1	1	1	2	1	4	1	1	1	1	1	4	1	1	1	1
	R-22	WH20HF	20HF	4		1	1	1	1	1	1	2	1	4	1	1	1	1		4	1	1	1	1
		WH20CF	20H/CF/LF	4		1	1	1	1	1	1	2	1	4	1	1	1	1		4	1	1	1	1
	R-502	WH20LF	20H/CF/LF	4	1		1	1	1	1	1	2	1	4	1	1	1	1	1	4	1	1	1	1
		W20ELF	20C/ELF	4		1	1	1	1	1	1	2	1	4	1	1	1	1	1	4	1	1	1	1

• • • • NOTES ON NEXT PAGE • • • •

'WH' WATER COOLED CONDENSING UNITS

"WH" RAISED BASE (3 & 5 HP) WATER COOLED CONDENSING UNITS

NOMINAL HP	REFRIGERANT	UNIT MODEL NUMBER	COMPRESSOR NUMBER	COMP. MTG. SPACER		CONDENSER			RECEIVER (SEE NOTE 7)		TOWER WATER VALVE (SEE NOTE 1)			CITY WATER VALVE (SEE NOTE 1)		OIL FAIL. CNT.	LOW PRESS. CNT.	HIGH PRESS. CNT.	BRACKET CONTROL	BASE	LEG (RAISED BASE)	VALVE R-OUT		GASKET R-OUT VALVE	FUSIBLE PLUG	CRANKCASE HEATER	BODY COOLING FAN	OPTIONAL ITEMS					
				GA 500	GA 1774	CIC 200	CIC 300	CIC 550	REC 81	REC 82	VAL 159	VAL 160	VAL 161	VAL 159	VAL 160	CNT 106	CNT 20 (NOTE 7)	CNT 29 (NOTE 7)	650B395	BAS 117S	LEG 77	VAL 435	VAL 332	VAL 331	GA 467	PLU 135	SEE NOTE 3	SEE NOTE 2	COMP. SPRING MOUNTS	RELIEF VALVE	RECEIVER HEATER	REC. HEATER THERMOSTAT	CHECK VALVE-HTD. RCV'R.
																													SEE NOTE 4	VAL 685T2	SEE NOTE 5	CNT 229	VAL 389
3	R-12	WH30H	30H/LF	4			1		1			1		1			1	1	2	1	4		1		1	1	1		4	1	1	1	1
		WH32C	32C/ELF	4			1		1			1		1			1	1	2	1	4		1		1	1	1		4	1	1	1	1
		WH30C	30C/ELF		4		1		1			1		1			1	1	2	1	4		1		1	1	1		4	1	1	1	1
		WH30L	30L		4	1			1		1			1			1	1	2	1	4	1			1	1	1	1	4	1	1	1	1
	R-22	WH30HF	30HF	4			1		1			1		1			1	1	2	1	4		1		1	1	1		4	1	1	1	1
		WH30CF	30CF	4			1		1			1		1			1	1	2	1	4		1		1	1	1		4	1	1	1	1
	R-502	WH30LF	30H/LF	4		1			1		1			1			1	1	2	1	4		1		1	1	1	1	4	1	1	1	1
		WH32ELF	32C/ELF	4			1		1			1		1			1	1	2	1	4		1		1	1	1	1	4	1	1	1	1
		WH30ELF	30C/ELF		4		1		1			1		1			1	1	2	1	4		1		1	1	1	1	4	1	1	1	1
5	R-12	WH50H	50H/LF		4			1		1			1		1		1	1	2	1	4			1	1	1	1		4	1	1	1	1
		WH50C	50C/ELF		4			1		1			1		1		1	1	2	1	4			1	1	1	1		4	1	1	1	1
		WH51PL	51PL		4		1			1		1		1		1	1	1	3	1	4		1		1	1	1	1	4	1	1	1	1
	R-22	WH52HF	52HF		4			1		1			1		1		1	1	2	1	4			1	1	1	1		4	1	1	1	1
		WH50CF	50CF		4			1		1			1		1		1	1	2	1	4			1	1	1	1		4	1	1	1	1
	R-502	WH50LF	50H/LF		4		1			1		1		1			1	1	2	1	4			1	1	1	1	1	4	1	1	1	1
		WH50ELF	50CELF		4			1		1			1		1		1	1	2	1	4			1	1	1	1	1	4	1	1	1	1

NOTES:

1. Asterisk (*) indicates that the valve is unmounted. For size of water valves and necessary brackets, consult Appendix 'D'.
2. Body cooling fans are required on all low temperature compressors (LF and ELF), using refrigerant R-502 and low temperature compressors (L), 2 HP and larger, using refrigerant R-12. For selection of components or complete unit, consult Appendix 'E'.
3. Crankcase heaters are selected according to voltage. For 120V, use heater number GA 1522 (Blue Wires); for 240V, use heater number GA 1521 (Red Wires).
4. Optional compressor spring mounts may be selected from Appendix 'C'.
5. Receiver heaters are selected according to voltage. For 120V, use heater number HTR 94T6; for 230V, use heater number HTR 94T5. "Cartridge Type".
6. Vessel only. For receiver sizes see Appendix 'F'.
7. Units prior to 1980 with a single dual pressure control, use CNT22.

'WH' WATER COOLED CONDENSING UNITS

"WH" RAISED BASE
(7½ thru 17½ HP)
WATER COOLED
CONDENSING UNITS

NOMINAL HP	REFRIGERANT	UNIT MODEL NUMBER	COMPRESSOR NUMBER	COMP. MTG. SPACER	CONDENSER				RECEIVER (SEE NOTE 7)	TOWER WATER VALVE				CITY WATER VALVE (SEE NOTE 1)			LOW PRESS. CNT.	HIGH PRESS. CNT.	OIL FAIL. CNT.	BRACKET, CONTROL	BASE	LEG (RAISED BASE)	VALVE R-OUT	GASKET, R-OUT VALVE	FUSIBLE PLUG	CRANKCASE HEATER	BODY COOLING FAN	OPTIONAL ITEMS	COMP. SPRING MOUNTS	RELIEF VALVE	RECEIVER HEATER	RECEIVER HEATER THTS'T	CHECK VALVE-HTD. RCV'R.
				GA 1774	CIC 550	CIC 750	CIC 1000	CIC 1500	REC 82	VAL 161	VAL 162*	VAL 163*	VAL 164*	VAL 160	VAL 161	VAL 162*	CNT 20(NOTE 7)	CNT29(NOTE 7)	CNT. 106	650B395	BAS 119S	LEG 77	VAL 331	GA 467	PLU 135	SEE NOTE 3	SEE NOTE 2		SEE NOTE 4	VAL 685T2	SEE NOTE 5	CNT 229	VAL 389
7½	R-12	WH76PH	76PH/C/LF	4		1			1		1				1		1	1	1	3	1	4	1	1	1	1			4	1	1	1	1
		WH77PC	77PC/ELF	4		1			1		1				1		1	1	1	3	1	4	1	1	1	1			4	1	1	1	1
		WH76PL	76PL	4	1				1	1				1			1	1	1	3	1	4	1	1	1	1	1		4	1	1	1	1
	R-22	WH75HF	75HF	4		1			1		1				1		1	1		2	1	4	1	1	1	1			4	1	1	1	1
		WH75CF	75CF	4		1			1		1				1		1	1		2	1	4	1	1	1	1			4	1	1	1	1
	R-502	WH76PLF	76PH/C/LF	4	1				1	1				1			1	1	1	3	1	4	1	1	1	1	1		4	1	1	1	1
		WH77PELF	77PC/ELF	4		1			1		1				1		1	1	1	3	1	4	1	1	1	1	1		4	1	1	1	1
10	R-12	WH101PHC	101PH/C/ELF	4			1	1			1			1			1	1	1	3	1	4	1	1	1	1			4	1	1	1	1
		WH104PL	104PL	4		1			1		1				1		1	1	1	3	1	4	1	1	1	1	1		4	1	1	1	1
	R-22	WH100PHF	100PHF	4			1		1			1			1		1	1	1	3	1	4	1	1	1	1			4	1	1	1	1
		WH111PCF	111PHF/CF	4			1		1			1			1		1	1	1	3	1	4	1	1	1	1	1		4	1	1	1	1
	R-502	WH101PELF	101PH/C/ELF	4			1		1			1			1		1	1	1	3	1	4	1	1	1	1	1		4	1	1	1	1
15	R-12	WH154PHC	154PH/C/ELF	4				1	1				1			1	1	1	1	3	1	4	1	1	1	1			4	1	1	1	1
	R-22	WH151PHF	151PHF/CF	4				1	1				1			1	1	1	1	3	1	4	1	1	1	1			4	1	1	1	1
		WH151PCF	151PCF/CF	4				1	1				1			1	1	1	1	3	1	4	1	1	1	1	1		4	1	1	1	1
	R-502	WH154PELF	154PH/C/ELF	4				1	1				1			1	1	1	1	3	1	4	1	1	1	1	1		4	1	1	1	1
17½	R-22	WH201PHF/CF	201PHF/CF	4				1	1				1			1	1	1	1	3	1	4	1	1	1	1			4	1	1	1	1
20	R-22	WH204PCF	204PHF/CF	4				1	1				1			1	1	1	1	3	1	4	1	1	1	1			4	1	1	1	1
20	R-22	WH204PHF	204PHF/CF	CONSULT FACTORY																													

NOTES:

1. Asterisk (*) indicates that the valve is unmounted. For size of water valves and necessary brackets, consult Appendix 'D'.
2. Body cooling fans are required on all low temperature compressors (LF and ELF), using refrigerant R-502 and low temperature compressors (L), 2 HP and larger, using refrigerant R-12. For selection of components or complete unit, consult Appendix 'E'.
3. Crankcase heaters are selected according to voltage. For 120V, use heater number GA 1522 (Blue Wires); for 240V, use heater number GA 1521 (Red Wires).
4. Optional compressor spring mounts may be selected from Appendix 'C'.
5. Receiver heaters are selected according to voltage. For 120V, use heater number HTR 94T6; for 230V, use heater number HTR 94T5. "Cartridge Type".
6. Vessel only. For receiver sizes see Appendix 'F'.
7. Units prior to 1980 with a single dual pressure control, use CNT22.

'EH' COMPRESSOR-RECEIVER UNITS

'E' FLAT BASE OR "EH" RAISED BASE (½ thru 1 HP) (Fractionals) COMPRESSOR-RECEIVER UNITS

NOMINAL HP	REFRIGERANT	UNIT MODEL NUMBER	COMPRESSOR NUMBER	PUMP END: GB 94	MOTOR END: GB 119	MOTOR END: GC 184	RECEIVER (SEE NOTE 6): GC 193	LOW PRESS. CNT.: CNT 20 (NOTE 6)	HIGH PRESS. CNT.: CNT 29 (NOTE 6)	BRACKET, CONTROL: 650B395	VALVE, R-OUT: VAL 435	GASKET, R-OUT VALVE: GA 467	BASE-RAISED: BAS 115S	LEG (RAISED BASE): LEG 77	OPTIONAL ITEMS: SEE NOTE 2	OPTIONAL ITEMS: CRANKCASE HEATER
½	R-12	EH5HCL	5HCL	2	1	1		1	1	2	1	1	1	4		1
¾	R-12	EH9HCL	9HCL	2	1	1		1	1	2	1	1	1	4		1
1	R-12	EH11HCL	11HCL	2	1		1	1	1	2	1		1	4		1

"EH" RAISED BASE (1½ & 2 HP) COMPRESSOR-RECEIVER UNITS

NOMINAL HP	REFRIGERANT	UNIT MODEL NUMBER	COMPRESSOR NUMBER	COMP. MTG. SPACER: GA 500	RECEIVER (SEE NOTE 6): REC 83	LOW PRESS. CNT.: CNT 20 (NOTE 6)	HIGH PRESS. CNT.: CNT 29 (NOTE 6)	BRACKET CONTROL: 650B395	BASE: BAS 115S	LEG (RAISED BASE): LEG 77	VALVE R-OUT: VAL 435	GASKET R-OUT VALVE: GA 467	RUSIBLE PLUG: PLU 135	CRANKCASE HEATER: SEE NOTE 2	BODY COOLING FAN: SEE NOTE 1	OPTIONAL ITEMS: COMP. SPRING MOUNTS: SEE NOTE 3	OPTIONAL ITEMS: RELIEF VALVE (SEE NOTE 6): VAL 685T2	OPTIONAL ITEMS: RECEIVER HEATER: SEE NOTE 4	OPTIONAL ITEMS: REC. HEATER THERMOSTAT: CNT 229	OPTIONAL ITEMS: CHECK VALVE-HTD. RCV'R.: VAL 389
1½	R-12	EH15H	15H/CF/LF	4	1	1	1	2	1	4	1	1	1	1		4	1	1	1	1
		EH15C	15C/ELF	4	1	1	1	2	1	4	1	1	1	1		4	1	1	1	1
		EH15L	15L	4	1	1	1	2	1	4	1	1	1	1		4	1	1	1	1
	R-22	EH15CF	15H/CF/LF	4	1	1	1	2	1	4	1	1	1	1		4	1	1	1	1
	R-502	EH15LF	15H/CF/LF	4	1	1	1	2	1	4	1	1	1	1	1	4	1	1	1	1
		EH15ELF	15C/ELF	4	1	1	1	2	1	4	1	1	1	1	1	4	1	1	1	1
2	R-12	EH20H	20H/CF/LF	4	1	1	1	2	1	4	1	1	1	1		4	1	1	1	1
		EH20C	20C/ELF	4	1	1	1	2	1	4	1	1	1	1		4	1	1	1	1
		EH20L	20L	4	1	1	1	2	1	4	1	1	1	1		4	1	1	1	1
	R-22	EH20HF	20HF	4	1	1	1	2	1	4	1	1	1	1		4	1	1	1	1
		EH20CF	20H/CF/LF	4	1	1	1	2	1	4	1	1	1	1		4	1	1	1	1
	R-502	EH20LF	20H/CF/LF	4	1	1	1	2	1	4	1	1	1	1	1	4	1	1	1	1
		EH20ELF	20C/ELF	4	1	1	1	2	1	4	1	1	1	1	1	4	1	1	1	1

• • • • NOTES ON NEXT PAGE • • • •

10 3/6

'EH' COMPRESSOR-RECEIVER UNITS

"EH" RAISED BASE
(3 & 5 HP)
COMPRESSOR-RECEIVER UNITS

NOMINAL HP	REFRIGERANT	UNIT MODEL NUMBER	COMPRESSOR NUMBER	COMP. MTG. SPACER	RECEIVER (SEE NOTE 6)			OIL FAIL. CNT.	LOW PRESS. CNT	HIGH PRESS CNT	BRACKET, CONTROL	VASE	LEG (RAISED BASE)	VALVE R-OUT		GASKET, R-OUT VALVE	FUSIBLE PLUG	CRANKCASE HEATER	BODY COOLING FAN	OPTIONAL ITEMS	COMP. SPRING MOUNTS	RELIEF VALVE	RECEIVER HEATER	REC. HEATER THERMOSTAT	CHECK VALVE-HTD. RCV'R.
				GA 500	GA 1774	REC 81	REC 82	CNT 106	CNT 20(NOTE 6)	CNT 29(NOTE 6)	650B395	BAS 117S	LEG 77	VAL 332	VAL 331	GA 467	PLU 135	SEE NOTE 2	SEE NOTE 1		SEE NOTE 3	VAL 685T2	SEE NOTE 4	CNT 229	VAL 389
3	R-12	EH30H	30H/LF	4		1			1	1	2	1	4	1		1	1	1			4	1	1	1	1
		EH32C	32C/ELF	4		1			1	1	2	1	4	1		1	1	1			4	1	1	1	1
		EH30C	30C/ELF		4	1			1	1	2	1	4	1		1	1	1			4	1	1	1	1
		EH30L	30L		4	1			1	1	2	1	4	1		1	1	1	1		4	1	1	1	1
	R-22	EH30HF	30HF	4		1			1	1	2	1	4	1		1	1	1			4	1	1	1	1
		EH30CF	30CF	4		1			1	1	2	1	4	1		1	1	1			4	1	1	1	1
	R-502	EH30LF	30H/LF	4		1			1	1	2	1	4	1		1	1	1	1		4	1	1	1	1
		EH32ELF	32C/ELF	4		1			1	1	2	1	4	1		1	1	1	1		4	1	1	1	1
		EH30ELF	30C/ELF		4	1			1	1	2	1	4	1		1	1	1	1		4	1	1	1	1
5	R-12	EH50H	50H/LF		4		1		1	1	2	1	4		1	1	1	1			4	1	1	1	1
		EH50C	50C/ELF		4		1		1	1	2	1	4		1	1	1	1			4	1	1	1	1
		EH51PL	51PL		4		1		1	1	2	1	4		1	1	1	1			4	1	1	1	1
	R-22	EH52HF	52HF		4		1		1	1	2	1	4		1	1	1	1			4	1	1	1	1
		EH50CF	50CF		4		1		1	1	2	1	4		1	1	1	1			4	1	1	1	1
	R-502	EH50LF	50H/LF		4		1		1	1	2	1	4		1	1	1	1	1		4	1	1	1	1
		EH50ELF	50C/ELF		4		1		1	1	2	1	4		1	1	1	1	1		4	1	1	1	1

NOTES:

1. Body cooling fans are required on all low temperature compressors (LF and ELF), using refrigerant R-502 and low temperature compressors (L), 2 HP and larger, using refrigerant R-12. For selection of components or complete unit, consult Appendix 'E'.
2. Crankcase heaters are selected according to voltage. For 120V, use heater number GA 1522 (Blue Wires); for 240V, use heater number GA 1521 (Red Wires).
3. Optional compressor spring mounts may be selected from Appendix 'C'.
4. Receiver heaters are selected according to voltage. For 120V, use heater number HTR 94T6; for 230V, use heater number HTR 94T5. "Cartridge Type".
5. Vessel only. For receiver sizes see Appendix 'F'.
6. Units prior to 1980 with a single dual pressure control, use CNT22.

'EH' COMPRESSOR-RECEIVER UNITS

"EH" RAISED BASE (7½ thru 20 HP) COMPRESSOR-RECEIVER UNITS

NOMINAL HP	REFRIGERANT	UNIT MODEL NUMBER	COMPRESSOR NUMBER	COMP. MTG. SPACER	RECEIVER (SEE NOTE 6)	LOW PRESS. CNT	HIGH PRESS. CNT. (NOTE 6)	OIL FAIL CNT.	BRACKET, CONTROL	BASE	LEG (RAISED BASE)	VALVE R-OUT	GASKET, R-OUT VALVE	FUSIBLE PLUG	CRANKCASE HEATER	BODY COOLING FAN	OPTIONAL ITEMS	COMP. SPRING MOUNTS	RELIEF VALVE	RECEIVER HEATER	REC. HEATER THERMOSTAT	CHECK VALVE-HTR. RCV'R.
				GA 1774	REC 68	CNT 20	CNT 29	CNT 106	650B395	BAS 117S	LEG 77	VAL 331	GA 467	PLU 135	SEE NOTE 2	SEE NOTE 1		SEE NOTE 3	VAL 685T2	SEE NOTE 4	CNT 229	VAL 389
7½	R-12	EH76PH	76PH/C/LF	4	1	1	1	1	3	1	4	1	1	1	1			4	1	1	1	1
		EH76PL	76PL	4	1	1	1	1	3	1	4	1	1	1	1	1		4	1	1	1	1
		EH77PC	77PC/ELF	4	1	1	1		3	1	4	1	1	1	1			4	1	1	1	1
	R-22	EH75HF	75HF	4	1	1	1		2	1	4	1	1	1	1			4	1	1	1	1
		EH75CF	75CF	4	1	1	1		2	1	4	1	1	1	1			4	1	1	1	1
	R-502	EH76PLF	76PH/C/ELF	4	1	1	1	1	3	1	4	1	1	1	1	1		4	1	1	1	1
		EH77PELF	77PC/ELF	4	1	1	1	1	3	1	4	1	1	1	1	1		4	1	1	1	1
10	R-12	EH101PHC	101PH/C/ELF	4	1	1	1	1	3	1	4	1	1	1	1			4	1	1	1	1
		EH104PL	104PL	4	1	1	1	1	3	1	4	1	1	1	1	1		4	1	1	1	1
	R-22	EH100PHF	100PHF	4	1	1	1	1	3	1	4	1	1	1	1			4	1	1	1	1
		EH111PCF	111PHF/CF	4	1	1	1	1	3	1	4	1	1	1	1	1		4	1	1	1	1
	R-502	EH101PELF	101PH/C/ELF	4	1	1	1	1	3	1	4	1	1	1	1	1		4	1	1	1	1
15	R-12	EH154PHC	154PHC/ELF	4	1	1	1	1	3	1	4	1	1	1	1			4	1	1	1	1
	R-22	EH151PHC	151PHF/CF	4	1	1	1	1	3	1	4	1	1	1	1			4	1	1	1	1
		EH151PCF	151PHF/CF	4	1	1	1	1	3	1	4	1	1	1	1	1		4	1	1	1	1
	R-502	EH154PELF	154PH/C/ELF	4	1	1	1	1	3	1	4	1	1	1	1	1		4	1	1	1	1
17½	R-22	EH201PHF/CF	201PHF/CF	4	1	1	1	1	3	1	4	1	1	1	1			4	1	1	1	1
20	R-22	EH204PHF/CF	204PHF/CF	4	1	1	1	1	3	1	4	1	1	1	1			4	1	1	1	1

NOTES:

1. Body cooling fans are required on all low temperature compressors (LF and ELF), using refrigerant R-502 and low temperature compressors (L), 2 HP and larger, using refrigerant R-12. For selection of components or complete unit, consult Appendix 'E'.
2. Crankcase heaters are selected according to voltage. For 120V, use heater number GA 1522 (Blue Wires); for 240V, use heater number GA 1521 (Red Wires).
3. Optional compressor spring mounts may be selected from Appendix 'C'.
4. Receiver heaters are selected according to voltage. For 120V, use heater number HTR 94T6; for 230V, use heater number HTR 94T5. "Cartridge Type".
5. Vessel only. For receiver sizes see Appendix 'F'.
6. Units prior to 1980 with a single dual pressure control, use CNT22.

1038

APPENDIX 'A'

CONDENSER FAN MOTORS & FANS FOR AH, AWH, AWHD & AHD UNITS—60 HERTZ

COND.	ELECTRICAL CHARACTERISTICS Volt, Phase, Hertz	FAN MOTORS	FAN PART NO.	FAN MOTOR MTG.
GC 238	115/1/60	MTR 801	GC 163	BRK 264
	208/1/60	MTR 804		
	230/1/60	MTR 803		
	460/1/60	MTR 805		
GC 167	115/1/60	MTR 801	GC 162	
	208/1/60	MTR 804		
	230/1/60	MTR 803		
	460/1/60	MTR 805		
GC 104	115/1/60	MTR 801	GC 163	
	208/1/60	MTR 804		
	230/1/60	MTR 803		
	460/1/60	MTR 805		
CDS-332	208-230/1/60	MTR 1081	GC 1085	MTG 45
CDS-333	230-460/3/60	MTR 1083		
CDS-334	208-230/1/60	MTR 1084	FAN 5	MTG 46
CDS-335	440/1/60	MTR 1085		
CDS-336	208-230/1/60	MTR 1084	FAN 45	MTG 47
	460/1/60	MTR 1085		
CDS-337	200-230/1/60	MTR 1086	FAN 49	MTG 47
	460/1/60	MTR 1087		

NOTES:
1. Fan motors are to be selected by unit horsepower and electrical requirements.
2. Units 10HP and larger which use condenser CDS 336 will have the same size motor, fan and fan motor mount as a 7½HP unit.

APPENDIX 'B'

COMPRESSOR SPRING MOUNTS

HP	MODEL NO.	SPRING ASSEMBLY PUMP END		SPRING ASSEMBLY MOTOR END	
		KIT NO.	COLOR	KIT NO.	COLOR
1½	15H/CF/LF	KIT 393T3	BLACK	KIT 393T4	BLUE
1½	15C/ELF	↓	↓	↓	↓
1½	15L	↓	↓	↓	↓
2	20HF	↓	↓	↓	↓
2	20H/CF/LF	↓	↓	↓	↓
2	20C/ELF	↓	↓	↓	↓
2	20L	KIT 393T3	BLACK	KIT 393T4	BLUE
3	30HF	KIT 393T5	RED	KIT 393T5	RED
3	30CF	↓	↓	↓	↓
3	32C/ELF	KIT 393T5	RED	KIT 393T5	RED
3	30H/LF	KIT393T5	RED	KIT393T5	RED
5	52HF	KIT 393T6	WHITE	KIT 393T7	ORANGE
3	30C/ELF	↓	↓	↓	↓
3	30L	↓	↓	↓	↓
5	50CF	↓	↓	↓	↓
5	50H/LF	↓	↓	↓	↓
5	50C/ELF	↓	↓	↓	↓
7½	75HF	↓	↓	↓	↓
7½	75CF	↓	↓	↓	↓
10	100PHF	KIT 393T6	WHITE	KIT 393T7	ORANGE
5	51PL	KIT 393T6	WHITE	KIT 393T7	ORANGE
7½	76PH/C/LF	↓	↓	↓	↓
7½	77PC/ELF	↓	↓	↓	↓
7½	76PL	KIT 393T7	ORANGE	KIT 393T8	YELLOW
10	111PHF/CF	KIT 393T6	WHITE	KIT 393T9	ORANGE
10	101PH/C/ELF	KIT 393T7	ORANGE	KIT 393T9	GREEN
10	104PL	↓	↓	↓	↓
15	151PHF/CF	↓	↓	↓	↓
15	154PH/C/ELF	↓	↓	↓	↓
17½	201PHF/CF	↓	↓	↓	↓
20	204PHF/CF	KIT 393T7	ORANGE	KIT 393T9	GREEN

NOTES: 1. Selection of optional spring mounts are to be made according to compressor model no.
2. Two (2) spring assemblies are required for each end of the compressor.

APPENDIX 'C'

WATER REGULATING VALVE

VALVE NO.	CONNECTIONS (IN.)	BRACKET	BRACKET ADAPTER
VAL 159	⅜ FPT	GA 1085	—
VAL 160	½ FPT		BRK 334
VAL 161	¾ FPT		
VAL 162	1 FPT	—	—
VAL 163	1¼ FPT		
VAL 164	1½ FLANGE		

APPENDIX 'D'

BODY COOLING FAN

VOLTAGE	FAN MOTOR	FAN BLADE	MOTOR BRACKET	FAN GUARD
208/1/60	MTR 804	GC 237	BRK 264	GRD 74
230/1/60	MTR 803			
460/1/60	MTR 805			

NOTE: Select individual items according to voltage.

1040

APPENDIX 'E'

RECEIVERS

MODEL	SIZE (INCHES)	MOUNTING
GB90	6X11	Vertical
GB115	5X11	Vertical
GB116	6X10	Vertical
REC81	8X23	Horizontal
REC82	8X30	Horizontal
REC83	6X26	Horizontal

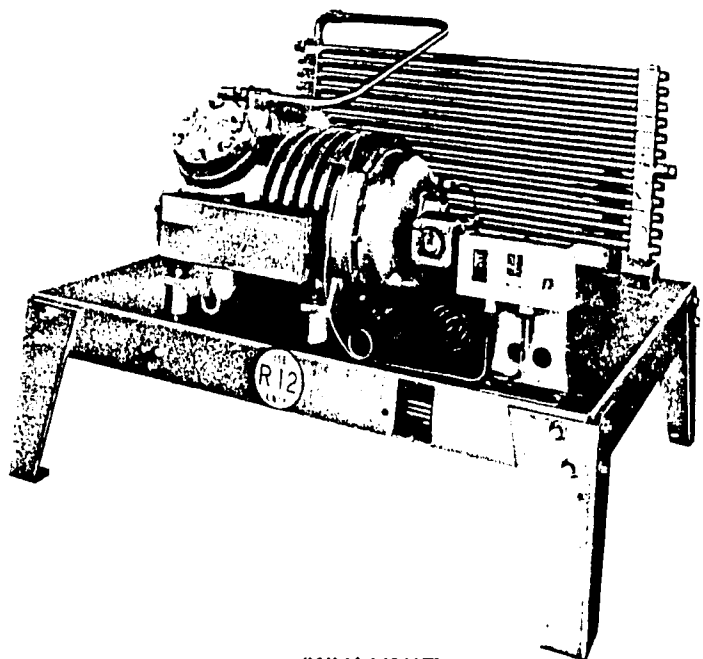

'WH' UNIT

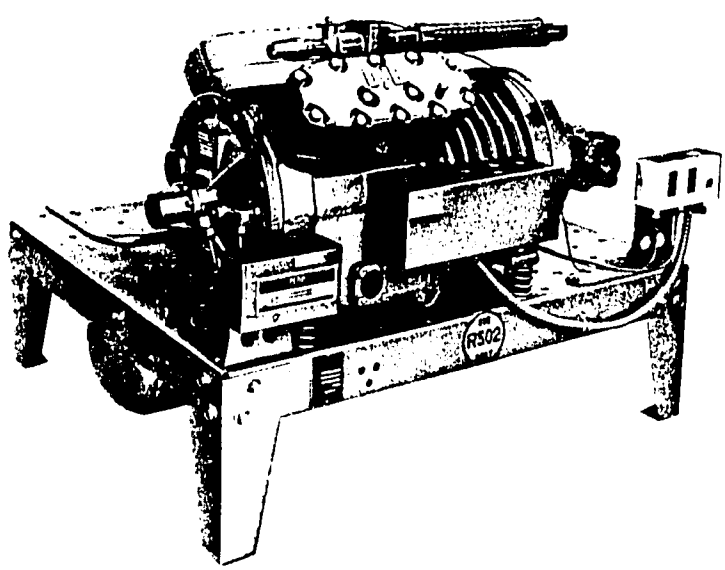

'EH' UNIT

DUNHAM-BUSH

AIR CONDITIONING, REFRIGERATION, HEATING PRODUCTS AND ACCESSORIES

MAIN OFFICES

175 SOUTH STREET WEST HARTFORD, CONNECTICUT 06110

FACTORIES

WEST HARTFORD DIVISION
179 South Street
West Hartford, Connecticut
06110

HARRISONBURG DIVISION
101 Burgess Road
Harrisonburg, Virginia
22801

MARSHALLTOWN DIVISION
311 East Main Street
Marshalltown, Iowa
50158

RIVERSIDE DIVISION
1850 Massachusetts Ave.
Riverside, California
92507

SUBSIDIARIES

DUNHAM-BUSH of Canada Limited
140 Wendell Avenue
Weston, Ontario

DUNHAM-BUSH, LTD.
Fitzherbert Road, Farlington
Portsmouth, Hampshire, England

DUNHAM-BUSH INTERNATIONAL: 175 South Street, West Hartford, Connecticut 06110, U.S.A.
CABLE: DUNBUSH or TELEX: 994469

SALES OFFICES

ALABAMA
Birmingham
Mobile

ARIZONA
Phoenix

ARKANSAS
Little Rock

CALIFORNIA
Arcadia
Los Angeles
Sacramento
San Diego
San Francisco

COLORADO
Denver

CONNECTICUT
Hartford
Bloomfield

FLORIDA
Clearwater
Jacksonville
Miami
Orlando

GEORGIA
Atlanta

HAWAII
Honolulu

ILLINOIS
Chicago
Peoria
Rockford

INDIANA
Indianapolis
Michigan City

IOWA
Des Moines

KANSAS
Lenexa

KENTUCKY
Louisville

LOUISIANA
New Orleans
Shreveport

MAINE
Lewiston

MARYLAND
Baltimore
Silver Spring

MASSACHUSETTS
Boston
Springfield

MICHIGAN
Detroit
Grand Rapids
Kalamazoo

MINNESOTA
Minneapolis

MISSISSIPPI
Jackson

MISSOURI
Kansas City
St. Louis

MONTANA
Billings
Great Falls

NEBRASKA
Omaha

NEW JERSEY
Hazlet
Little Falls
Union

NEW MEXICO
Albuquerque

NEW YORK
Albany
Buffalo
New York City
Rochester
Syracuse

NORTH CAROLINA
Charlotte
Greensboro

OHIO
Akron
Cincinnati
Cleveland
Columbus
Dayton
Delaware
Toledo

OKLAHOMA
Oklahoma City
Tulsa

OREGON
Portland

PENNSYLVANIA
Harrisburg
Philadelphia
Pittsburgh
Pittston

PUERTO RICO
Caparra Heights

RHODE ISLAND
Providence

TENNESSEE
Memphis
Knoxville
Nashville

TEXAS
Dallas
El Paso
Houston
Lubbock
San Antonio

UTAH
Salt Lake City

VIRGINIA
Alexandria
Harrisonburg
Richmond
Virginia Beach

WASHINGTON
Seattle
Spokane

WEST VIRGINIA
Barboursville

WISCONSIN
Milwaukee

DUNHAM-BUSH, INC. • Harrisonburg, Virginia 22801, U.S.A.
4033-1A-10M-177-480

Exhibit H-2

FORM NO. 4032F

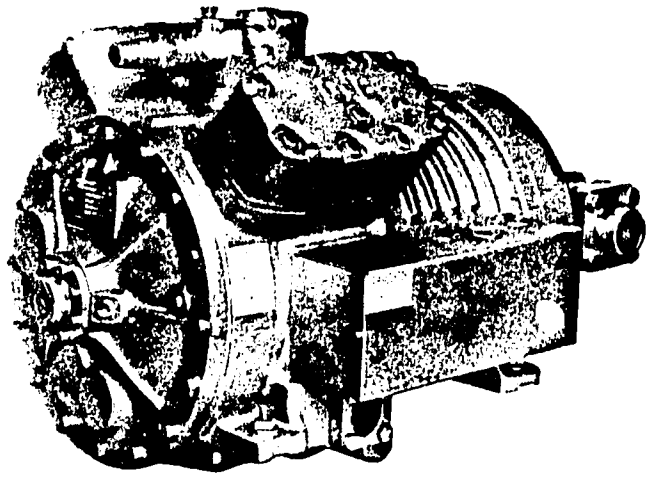

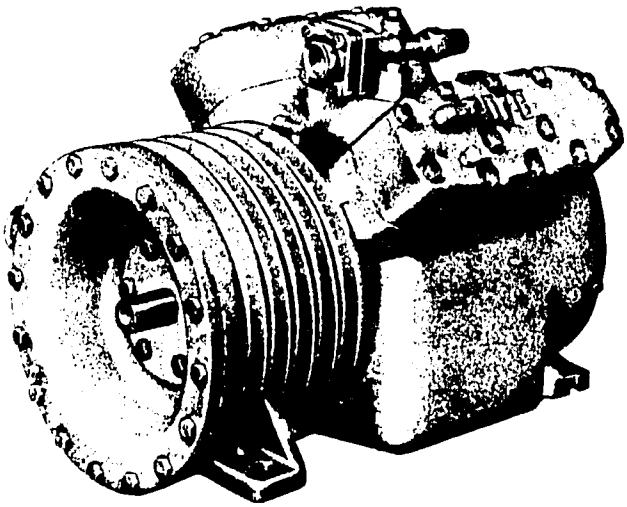

DUNHAM-BUSH

D/B METIC AND D-LINE COMPRESSOR REPLACEMENT PARTS CATALOG

1/2 THRU 20 H.P.

FOR 60 HZ. AND 50 HZ. UNITS

10(3)

INTRODUCTION

DUNHAM-BUSH RESERVES THE RIGHT TO MAKE CHANGES IN SPECIFICATIONS AND DESIGN WITHOUT NOTICE.

1. When ordering specify compressor model, serial no. and type letter.
2. Give exact part no. and part description.
3. Parts specifications are subject to change without notice.
4. We recommend the purchase of complete valve plate assemblies and terminal stud kits.
5. Minimum order $25.00 net.
6. For terms of sale refer to latest revision of form 1278.
7. Claims—In the event of loss or damage in transit, the sales outlet should immediately place a claim against the delivering transportation co. Dunham Bush, Inc. cannot assume responsibility for such items when damage or loss is incurred during transit.
8. For prices consult latest revision of form 4632.
9. Current and out of production models are subject to change without notice.

COMPRESSOR NOMENCLATURE

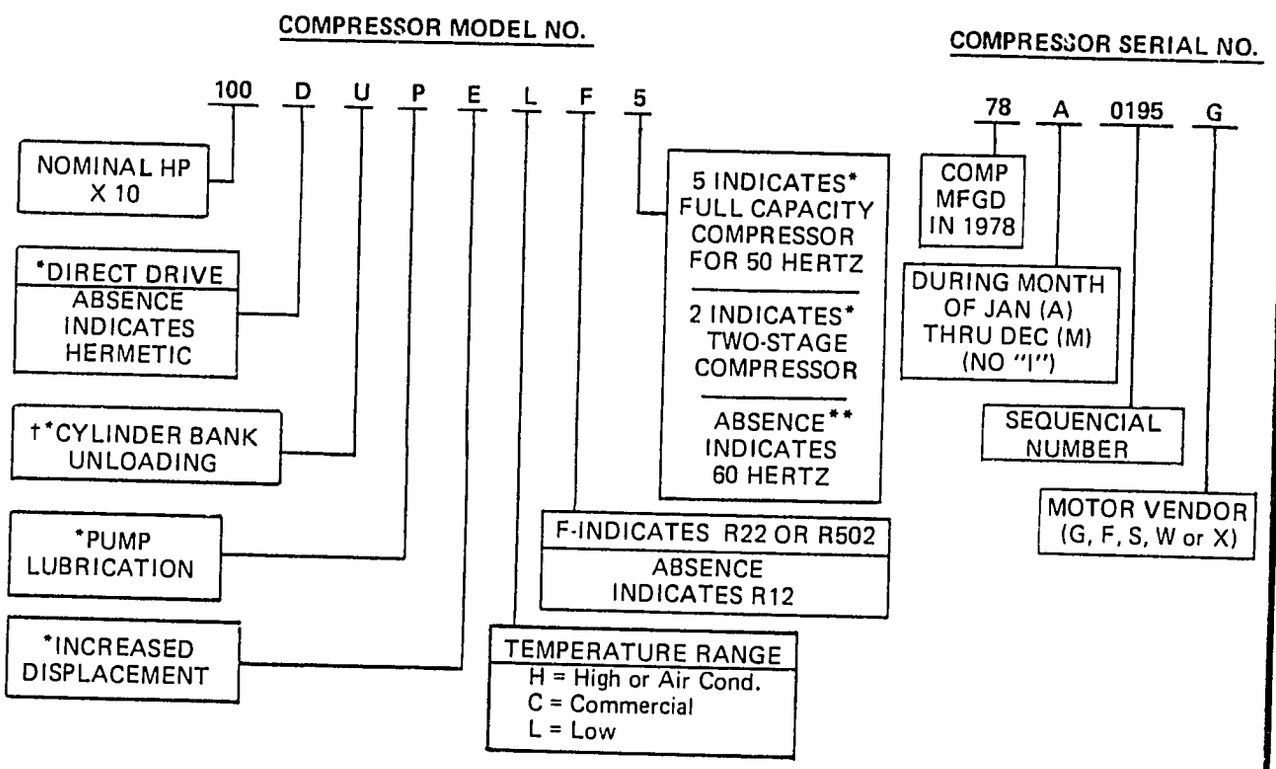

COMPRESSOR TYPE

The "type" letter which is stamped on the nameplate of the compressor changes whenever there is a major modification in the design of the compressor. The type letter must be indicated, as well as model number and serial number, when ordering parts.

NOTE:

Some D/B metic compressors can be used for different applications. These models use one of the following multi-designations: H/LF, H/CF/LF, C/ELF and H/C/ELF.

*IF FEATURE IS NOT USED NO LETTER OR NUMBER IS ADDED TO MODEL NO.

**50 Hz. compressor capacities may be determined by multiplying 60 Hz. compressor capacity by 0.833.

†UNLOADING COMPRESSORS ARE NOT LISTED. FOR INFORMATION CONCERNING THESE COMPRESSORS CONSULT PAGE 48 FOR CORRECT VALVE PLATES AND HEADS.

TABLE OF CONTENTS

DESCRIPTION	PAGE
Introduction	1
Unit Nomenclature	1
Compressor Model Index	2
D/B Metic Compressors	3
D-Line Compressors	4
Early Model Compressors	5
Comparable D-Line Displacements	6
SEMI-HERMETIC COMPRESSOR MODELS	
• D/B Metic 2 cylinder fractionals Current Production	7-8
• D/B Metic 2 cylinder Integrals Current Production	9-12
• D/B Metic 3/4 Cylinder Current Production	13-16
• D/B Metic 3/4 Cylinder Out of Production	17-18
• D/B Metic 6 Cylinder Current Production	19-22
• D/B Metic 6 Cylinder Out of Production	23-26

DESCRIPTION	PAGE
DIRECT DRIVE COMPRESSOR MODELS	
• D-Line 2 Cylinder Integral Current Production	27-30
• D-Line 3 Cylinder Current and out of Production	31-32
• D-Line 4 Cylinder Current Production	33-36
• D-Line 6 Cylinder Current Production	37-40
• D-Line 6 Cylinder Out of Production	41-44
KITS, ASSEMBLIES AND ACCESSORIES	
• D/B Metic & D-Line Standard & Unloader Valve Plate Assemblies	45
• D/B Metic & D-Line Gaskets - All Models	46
• D/B Metic Hermetic Compressors Electrical Accessories	47
• Unloader Kit Assemblies	48
• D/B Metic & D-Line Compressor Parts Kits	49
• D/B Metic & D-Line Compressor Mounting Assemblies	50

COMPRESSOR MODEL INDEX

D/B METIC SEMI-HERMETIC

60 HZ. MODELS	PAGE
5HCL	7-8
8HCL	7-8
9HCL	7-8
10HCL	7-8
11HCL	7-8
15H/CF/LF	9-12
15C/ELF	9-12
15L	9-12
20HF	9-12
20H/CF/LF	9-12
20C/ELF	9-12
20L	9-12
30HF	9-12
30H/LF	9-12
30CF	9-12
30C/ELF	13-16
30L	13-16
30EL	17-18
32C/ELF	9-12
50H/LF	13-16
50CF	13-16
50C/ELF	13-16
50L	23-26
50PEL	23-26
51PL	13-16
52HF	13-16
75HF	13-16
75CF	13-16
75H/LF	23-26
75PC/ELF	23-26
75PL	23-26
76PH/C/LF	13-16
76PL	19-22
77PC/ELF	13-16
100PHF	13-16
100PH/C/ELF	23-26
100PCF	23-26
101PH/C/ELF	19-22
104PL	19-22
111PHF/CF	13-16
150PHF	23-26
150PCF	23-26
151PHF/CF	13-16
154PH/C/ELF	19-22
174PCF	23-26
200PHF	23-26
201PHF/CF	19-22
204PHF/CF	19-22

50 HZ. MODELS	PAGE
15HF5	9-12
15H5/CF5/LF5	9-12
15C5/ELF5	9-12
15L5	9-12
20HF5	9-12
20H5/CF5/LF5	9-12
20C5/ELF5	9-12
20L5	17-18
22L5	9-12
30HF5	9-12
30H5/LF5	17-18
30CF5	9-12
30C5/ELF5	13-16
30L5	13-16
30EL5	23-26
32H5/LF5	9-12
41PL5	13-16
50H5/LF5	13-16
50CF5	13-16
50C5/ELF5	23-26
50PL5	23-26
50PEL5	23-26
51PH5/C5/LF5	13-16
52HF5	13-16
61PL5	19-22
62PC5/ELF5	13-16
75HF5	13-16
75PH5/LF5	23-26
75CF5	23-26
75PL5	19-22
75PL5/ELF5	23-26
77PH5/C5/ELF5	19-22
100PHF5	23-26
100PH5/C5/ELF5	23-26
100PCF5	23-26
101PHF5/CF5	13-16
101PH5/C5/ELF5	19-22
111PH5/CF5	13-16
150PHF5	23-26
151PH5/CF5	19-22
200PH5	23-26
201PHF5/CF5	19-22

D-LINE DIRECT DRIVE

60 HZ. MODELS	PAGE
15DH/CF/LF	27-30
15DC/ELF	27-30
15DL	27-30
20DHF	27-30
20DH/CF/LF	27-30
20DC/ELF	27-30
20DL	27-30
30DHF	27-30
30DH/LF	27-30
30DCF	27-30
30DC/ELF	33-36
30DL	33-36
30DEL	33-36
50DH/LF	33-36
50DCF	33-36
50DC/ELF	33-36
50DL	41-44
50DPEL	41-44
51DPL	33-36
51DPEL	33-36
52DHF	31-32
75DHF	33-36
75DCF	33-36
75DH/LF	41-44
75DPC/ELF	41-44
75DPL	41-44
76DPH/C/ELF	33-36
76DPL	41-44
77DPH/C/ELF	33-36
100DPHF	33-36
100DPCF	41-44
100DPH/ELF	41-44
101DPCF	33-36
101DPH/C/ELF	37-40
101DPL	37-40
111DPHF/CF	33-36
150DPHF	41-44
150DPCF	41-44
151DPHF/CF (4 Cyl.)	33-36
151DPCF (6 Cyl.)	37-40
154DPH/C/ELF	37-40
200DPHF	41-44
201DPHF	37-40
204DPHF/CF	37-40

50 HZ. MODELS	PAGE
15DHF5	27-30
15DH5/CF5/LF5	27-30
15DC5/ELF5	27-30
15DL5	27-30
20DHF5	27-30
20DH5/CF5/LF5	27-30
20DC5/ELF5	27-30
20DL5	31-32
30DHF5	27-30
30DCF5	27-30
30DH5/LF5	31-32
30DC5/ELF5	33-36
30DL5	33-36
30DEL5	41-44
31DPEL5	33-36
50DCF5	33-36
50DHF/LF5	33-36
50DC5/ELF5	41-44
50DPL5	41-44
50DPEL5	41-44
51DPH5/C5/ELF5	33-36
51DPL5	33-36
51DPEL5	37-40
52DHF5	31-32
75DHF5	33-36
75DCF5	41-44
75DPH5/LF5	41-44
75DPL5/ELF5	41-44
76DCF5	33-36
76DPH5/C5/ELF5	33-36
76DPL5	37-40
77DPH5/C5/ELF5	37-40
100DPHF5	41-44
100DPCF5	41-44
101DPHF5/CF5	33-36
101DPCF5	33-36
101DPH5/C5/ELF5	37-40
111DPH5/CF5	33-36
150DPHF5	41-44
151DPHF5/CF5	37-40
201DPHF5/CF5	37-40

D/B METIC HERMETIC COMPRESSORS—CURRENT PRODUCTION

TYPICAL 2 CYLINDER FRACTIONAL HERMETIC COMPRESSOR

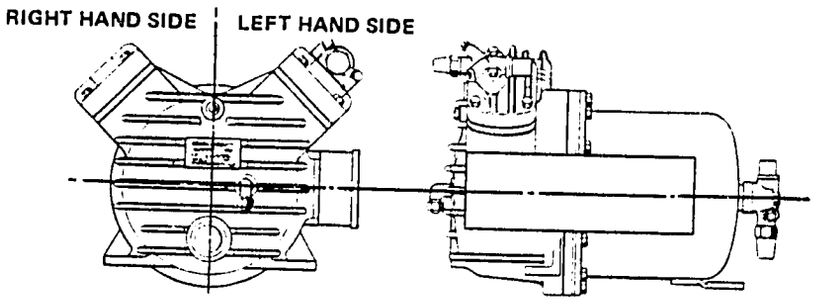

END VIEW

LEFT HAND SIDE VIEW

TYPICAL 2 CYLINDER INTEGRAL HERMETIC COMPRESSOR

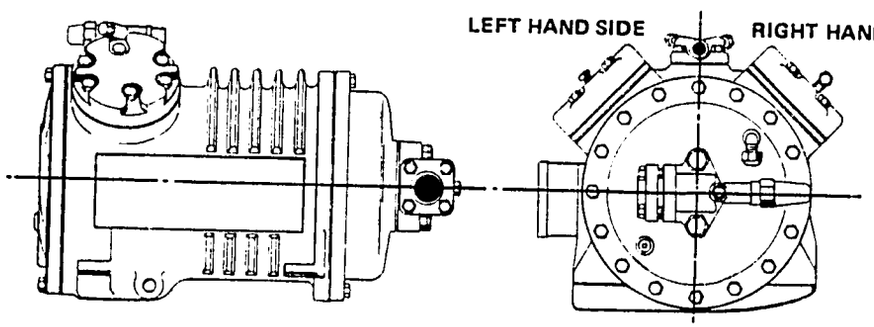

LEFT HAND SIDE VIEW

MOTOR END VIEW

TYPICAL 3 AND 4 CYLINDER HERMETIC COMPRESSORS

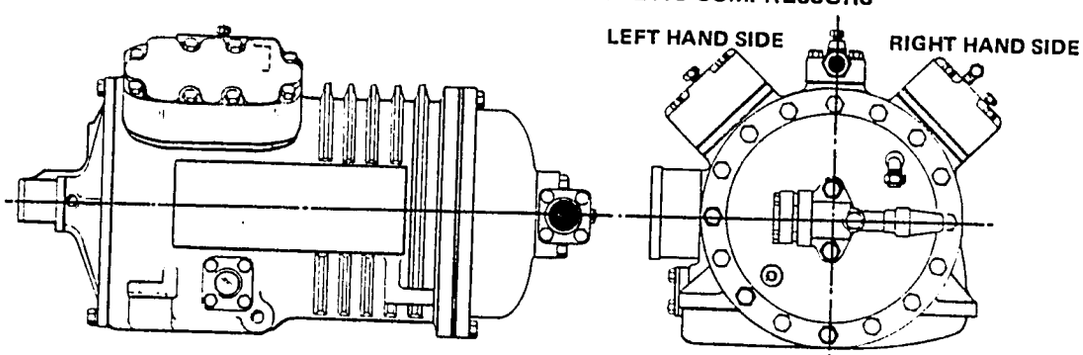

LEFT HAND SIDE VIEW

MOTOR END VIEW

TYPICAL 6 CYLINDER HERMETIC COMPRESSOR

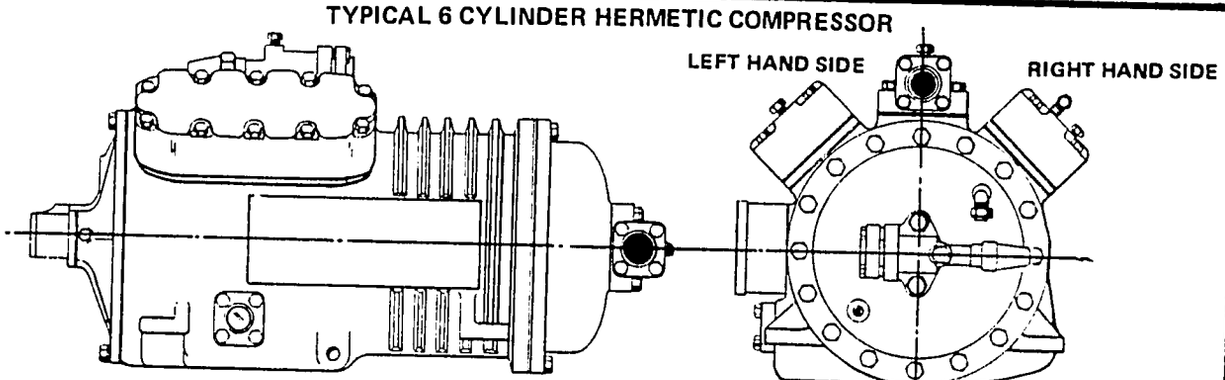

LEFT HAND SIDE VIEW

MOTOR END VIEW

D-LINE DIRECT DRIVE COMPRESSORS—CURRENT PRODUCTION

TYPICAL 2 CYLINDER D-LINE DIRECT DRIVE COMPRESSOR

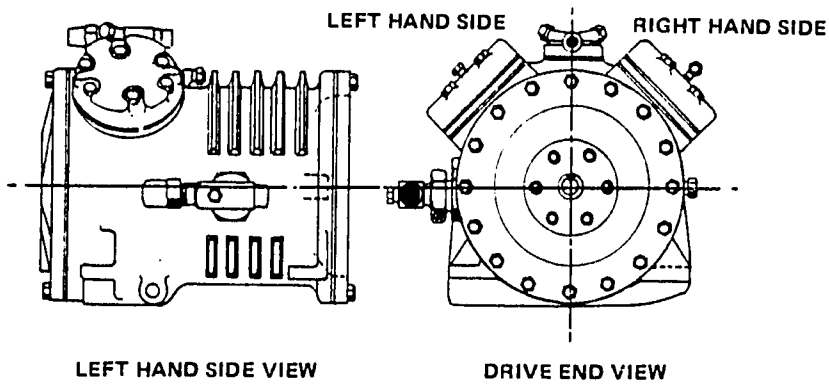

TYPICAL 3 AND 4 CYLINDER D-LINE DIRECT DRIVE COMPRESSORS

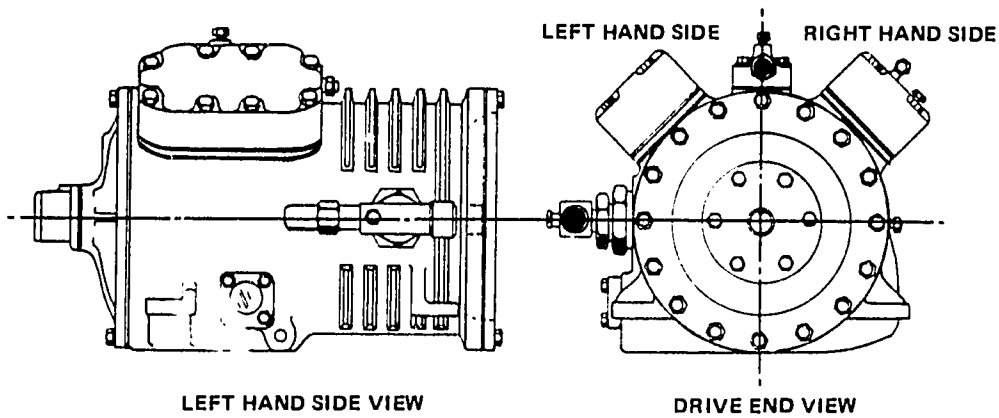

TYPICAL 6 CYLINDER D-LINE DIRECT DRIVE COMPRESSOR

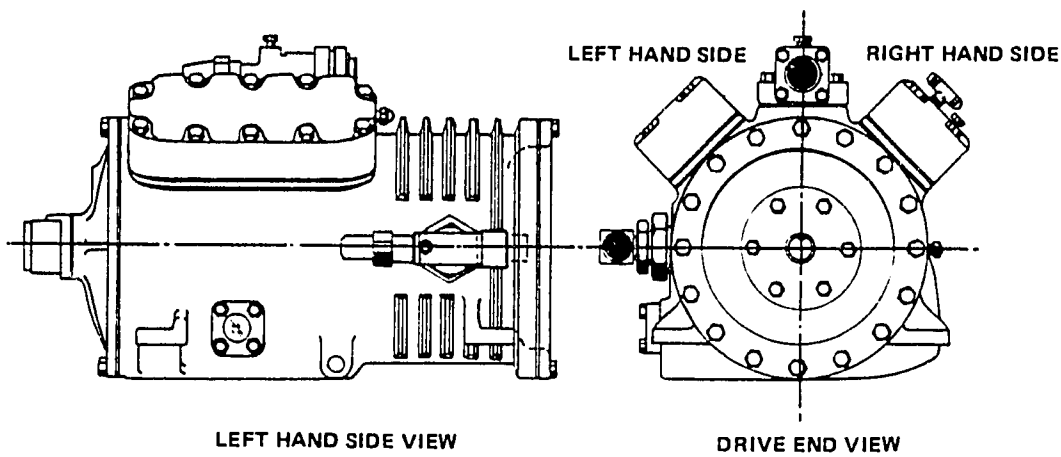

EARLY MODEL COMPRESSORS

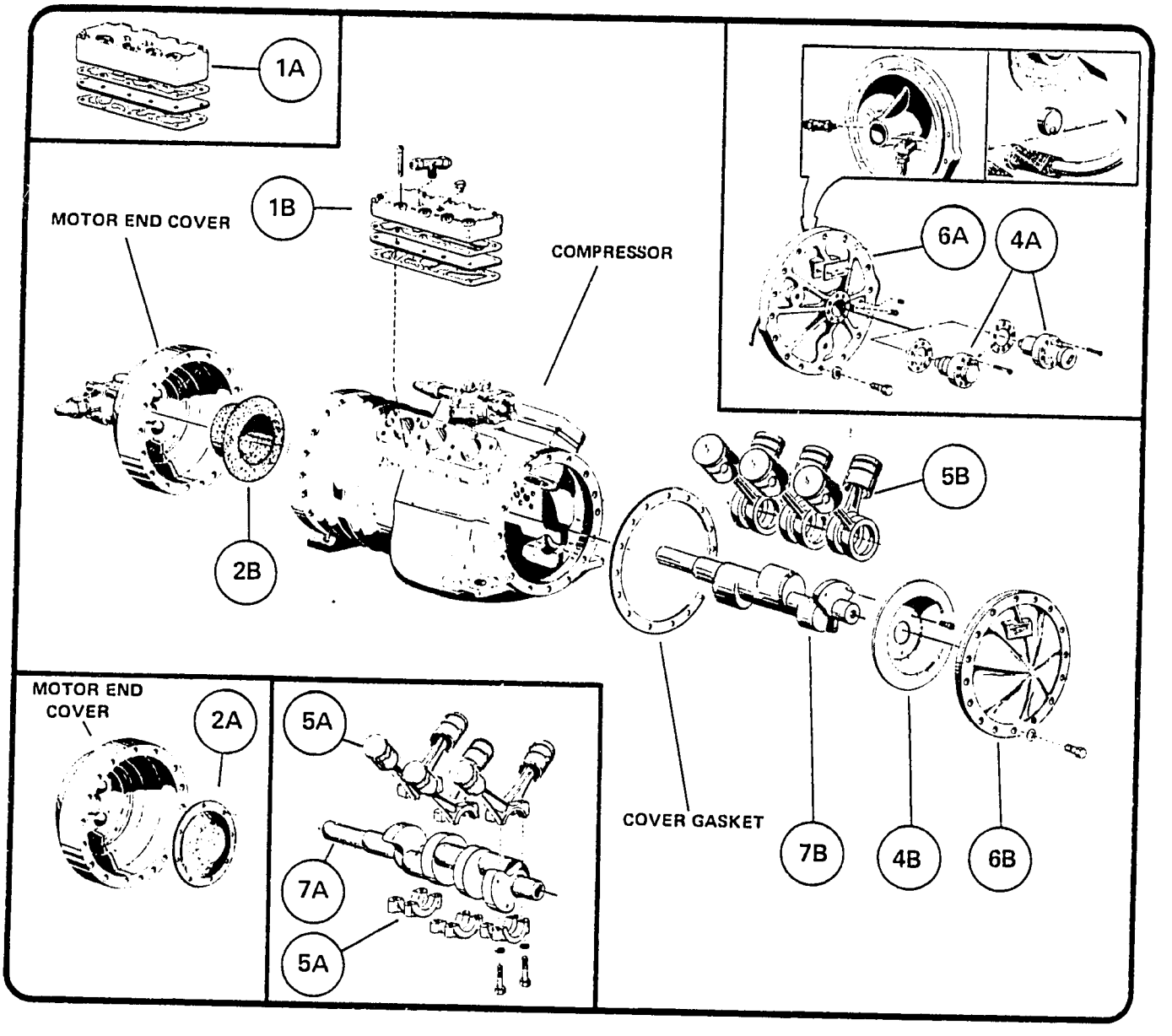

EARLY MODEL DUNHAM-BUSH COMPRESSORS BUILT PRIOR TO 1965 MAY BE UPDATED TO CURRENT DESIGN STANDARDS. REFER TO THE ILLUSTRATION ABOVE AND TEXT BELOW FOR CHANGES ON 3 CYLINDER, 4 CYLINDER AND 6 CYLINDER MODELS.

MUFFLER HEADS – New style muffler heads (1A) may be used to replace the low silhouette heads (1B). When ordering the new heads be sure to order screws to fit. (D/B part No. 012P27-3" long 3/8-16 grade 5 capscrews).

SUCTION FILTER – A derby shaped suction filter (2B) is available to replace old style suction screens found in compressors built prior to 1965. Installation of these filters require some surfaces of the housing to be remachined. Present filter, item (2A), cannot fit pre-1965 compressors. Consult factory.

OIL PUMPS – Oil pumps were not available for compressors built prior to 1965. To update these compressors to current design standards it is necessary to replace housing (6B) and slinger (4B) with motor cover (6A) and pump (4A). These items may be ordered as a kit. (See section IV, Parts Kit)

PISTONS AND CRANKSHAFTS – Pre-1965 4/6 cylinder compressors used strap-type rods (5B) and an eccentric crankshaft (7B). Straps are available, crankshafts are not. However, current design crankshafts (7A) and 2 piece rods (5A) fit pre-1965 crank cases. Orders for parts should be taken from the appropriate listings in this catalog.

COMPARABLE DISPLACEMENTS OF NEW VS. OLD D-LINE MODELS

NOTE: COMPRESSORS WITHIN THE SAME CODE GROUP ARE PHYSICALLY IDENTICAL. MOUNTING DIMENSIONS WILL VARY FROM OLD AND NEW MODELS. ALL MODELS NOT FOUND ON CHART MAY BE DIRECTLY REPLACED WITH THE SAME MODEL, EXCEPT THE MODELS NOTED IN EXHIBIT "A". TO ORDER A REPLACEMENT BE SURE TO SPECIFY MODEL PLUS CODE AS SHOWN IN TABLE BELOW. LIST PRICES CAN BE FOUND IN THE LATEST EDITION OF FORM 4650-2.

4 AND 6 CYLINDER 60 HZ							
OLD MODELS			APPLICATION		NEW MODELS		
CODE†	DISPLACEMENT (CFH)	OLD MODEL	←	→	NEW MODEL	DISPLACEMENT (CFH)	CODE†
6E	2412	200 DPHF	R-22 R-502	HF	201 DPHF	2500	6MP
		150 DPCF		CF	201 DPCF		
		–		LF	–		
		100 DPELF		ELF	101 DPELF		
		100 DPH	R-12	H	101 DPH		
		–		C	101 DPC		
		75 DPL		L	76 DPL		
		–		EL	–		
6D	2034	150 DPHF	R-22 R-502	HF	151 DPHF	2000	4FP
		–		CF	151 DPCF		
		–		LF	–		
		75 DPELF		ELF	77 DPELF		
		–	R-12	H	–		
		75 DPC		C	77 DPC		
		–		L	–		
		50 DPEL		EL	51 DPEL*		
6C	1698	–	R-22 R-502	HF	111 DPHF	1680	4MP
		100 DPCF		CF	111 DPCF		
		75 DLF		LF	–		
		–		ELF	76 DPLF		
		75 DH	R-12	H	76 DPH		
		–		C	76 DPC		
		50 DL		L	51 DPL		
		–		EL	–		

4 AND 6 CYLINDER 50 HZ							
OLD MODELS			APPLICATION		NEW MODELS		
CODE†	DISPLACEMENT (CFH)	OLD MODEL	←	→	NEW MODEL	DISPLACEMENT (CFH)	CODE†
6E	2010	150 DPHF5	R-22 R-502	HF	151 DPHF5	2083	6MP
		–		CF	151 DPCF5		
		–		LF	–		
		75 DPELF5		ELF	77 DPELF5		
		–	R-12	H	77 DPH5		
		–		C	77 DPC5		
		75 DPL5		L	–		
		50 DPEL5		EL	61 DPL5		
6D	1698	–	R-22 R-502	HF	111 DPHF5	1667	4FP
		100 DPCF5		CF	111 DPCF5		
		75 DPLF5		LF	–		
		–		ELF	62 DPELF5		
		75 DPH5	R-12	H	76 DPH5*		
		–		C	62 DPC5		
		50 DPL5		L	51 DPL5*		
		–		EL	–		
6C	1410	100 DPHF5	R-22 R-502	HF	101 DPHF5	1400	4MP
		75 DCF5		CF	101 DPCF5		
		–		LF	–		
		50 DELF5		ELF	51 DPLF5		
		–	R-12	H	51 DPH5		
		50 DC5		C	51 DPC5		
		–		L	–		
		30 DEL5		EL	41 DPL5		

*Order as indicated in Exhibit 'A'

EXHIBIT "A"

NOTE: Refer to the latest edition of list price sheet Form 4650-2 for replacement compressors for these models.

60 HZ.	COMPRESSOR BODY CODE †
30DEL	4D**
51DPEL	4FP**
76DPELF	4MP††
101DPCF	4MP††
50 HZ.	
20DL5	3C**
30DH5	3C**
30DL5	4D**
31DPEL5	4MP**
51DPH5	4MP**
51DPL5	4FP**
51DPELF5	4MP††
51DPEL5	6MP**
76DPCF5	4MP††
76DPH5	4FP**
76DPC5	4FP**
76DPELF5	4FP††

NOTE: ** = R-12 and †† = R-22 or R-502

NOTE: † = Code Explanation

The numeral represents the number of cylinders and the letter designates the bore and stroke of the compressor. The "P" indicates pump lubrication.

BORE X STROKE CODE

LETTER =	BORE X STROKE ↓	↓
A	1 13/16	1 1/8
B	1 13/16	1 1/2
C	2	1 1/2
D	2 3/16	1 1/2
E	2 3/16	1 49/64
F	2 3/16	2 3/16
G	1 1/2	7/8
H	1 5/8	7/8
J	1 1/2	1 1/4
K	1 5/8	1 1/4
L	1 5/8	1 9/16
M	2	2 3/16

D/B METIC 2 CYLINDER FRACTIONAL COMPRESSORS
CURRENT PRODUCTION MODELS

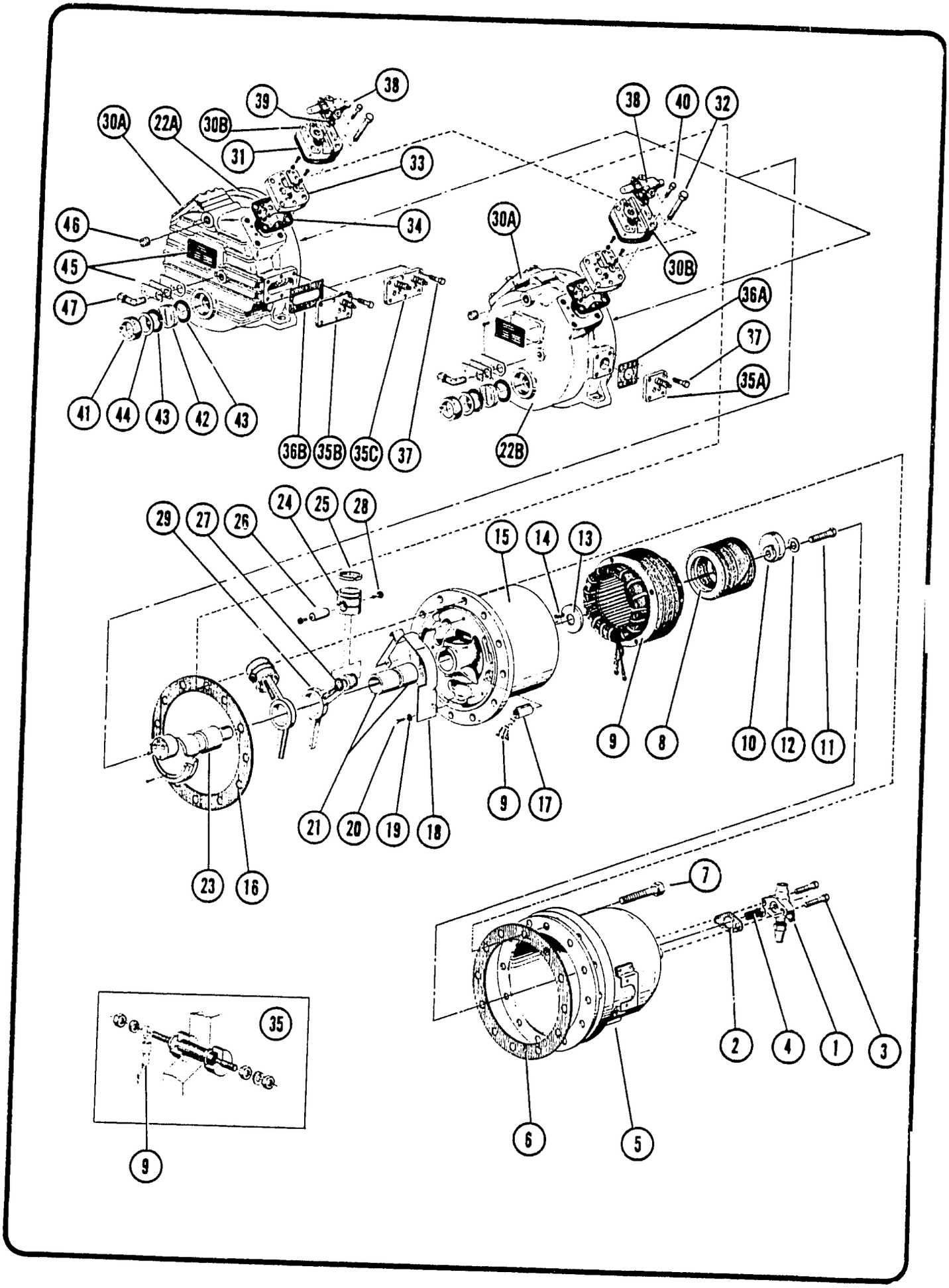

D/B METIC 2 CYLINDER FRACTIONAL COMPRESSORS
CURRENT PRODUCTION MODELS

				60 HZ.				
			SPECIFICATIONS DISPL. (CFH)	188	217	264	311	393
			BORE X STROKE (IN)	1 1/2 x 7/8	1 5/8 x 7/8	1 1/2 x 1 1/4	1 5/8 x 1 1/4	1 5/8 x 1 9/16
			COMP. MODEL	5 HCL	8 HCL ††	9 HCL	10 HCL ††	11 HCL
DESCRIPTION			PART NO.	QUANTITY				
1	Valve, Suction		VAL362	1				
	Service		VAL363		1	1	1	1
2	Gasket, Suction Valve		GKT398	1	1	1	1	1
3	Screw, Suction Valve		011P17	2	2	2	2	2
4	Strainer, Suction		GA109	1	1	1	1	1
5	Housing Assembly, Motor		NC20	1	1	1	1	1
6	Gasket, Housing		NC4	1	1	1	1	1
7	Screw, Housing		011P13	12	12	12	12	12
8	Rotor		–	Consult Factory				
9	Stator		–	Consult Factory				
10	Counterweight, Rotor		GA264	1	1			
			GA179T1			1	1	
			GA179T2					1
11	Screw, Counterweight		012P13	1	1	1	1	1
12	Lockwasher, weight		061P04	1	1	1	1	1
13	Washer, Thrust		GA171	1	1	1	1	1
14	Key, Shaft		NA76	1	1	1	1	1
15	Bearing, Spider		ND4	1	1	1	1	
			GD103					1
16	Gasket, Spider		NC5	1	1	1	1	1
17	Protector, Lead		NA74	1	1	1	1	1
18	Plate, Oil Collector		NC75	1	1	1	1	1
19	Washer, Collector		028P04	3	3	3	3	3
20	Screw, Collector		028P11	3	3	3	3	3
21	Bushing, Spider **		GA166	2	2	2	2	
			GA367					2
22	Crankcase *	A	GD54T3	1				
			GD54T4		1			
		B	GE72T1			1		
			GE72T4				1	
			GE72T5					1
23	Crankshaft		GC268	1				
			GC294		1			
			GC388					1
			GC270			1	1	

				60 HZ.				
			SPECIFICATIONS DISPL. (CFH)	188	217	264	311	393
			BORE X STROKE (IN)	1 1/2 x 7/8	1 5/8 x 7/8	1 1/2 x 1 1/4	1 5/8 x 1 1/4	1 5/8 x 1 9/10
			COMP. MODEL	5 HCL	8 HCL ††	9 HCL	10 HCL ††	11 HCL
DESCRIPTION			PART NO.	QUANTITY				
24	Piston & Pin †		NB11	1		1		
			GB284		1		1	1
25	Ring, Piston		NA27		1		1	1
			GA112	1		1		
26	Pin, Piston *		GA150	1		1		
			GA151		1		1	1
27	Washer, Pin		GA170	4	4	4	4	4
28	Rivet, Pin		0110G05	4		4		
			0110G10		4		4	4
29	Rod, Connecting		GC177	2	2			
			GC178			2	2	
			GC385					2
30	Head, Valve RH	A	HD34	1	1	1	1	1
	Head, Valve LH	B	GB280	1	1	1	1	1
31	Gasket, Head		NB3	2	2	2	2	2
32	Screw, Head		011P15	8	8	8	8	8
33	Valve Plate Assembly		GB160	2	2	2	2	2
34	Gasket, Valve Plate		NB4	2	2	2	2	2
35	Terminal Plate Assembly	A	NB15	Qty. Will Vary With Voltage and ϕ See Pg.49for Information				
		B	GB282					
		C	GB283					
36	Gasket, Term. Plate	A	NA8	1	1			
		B	GA369			1	1	1
37	Screw Term. Plate		011P10	4	4	6	6	6
38	Valve, Discharge Serv.		VAL361	1	1	1	1	1
39	Gasket, Disch. Valve		GA1370	1	1	1	1	1
40	Screw, Disch. Valve		011P13	2	2	2	2	2
41	Retainer, Sight Glass		GA211	1	1	1	1	1
42	Sight Glass		GA210	1	1	1	1	1
43	Gasket, Sight Glass		GA213	2	2	2	2	2
44	Ring, Friction		GA212	1	1	1	1	1
45	Identification Tags		—	4	4	4	4	4
46	Plug		055P71	1	1	1	1	1
47	Elbow		072P02	1	1	1	1	1

**Field replacement of bearings require line boring. Refer to National Service Bulletin SR116.
*Not available as separate item.
Note: Single phase models are designated "CL"
† Includes Piston, Piston Pin and Pin Rivets
†† Deleted from current production at time of publication.

D/B METIC 2 CYLINDER INTEGRAL HERMETIC COMPRESSORS
CURRENT PRODUCTION MODELS

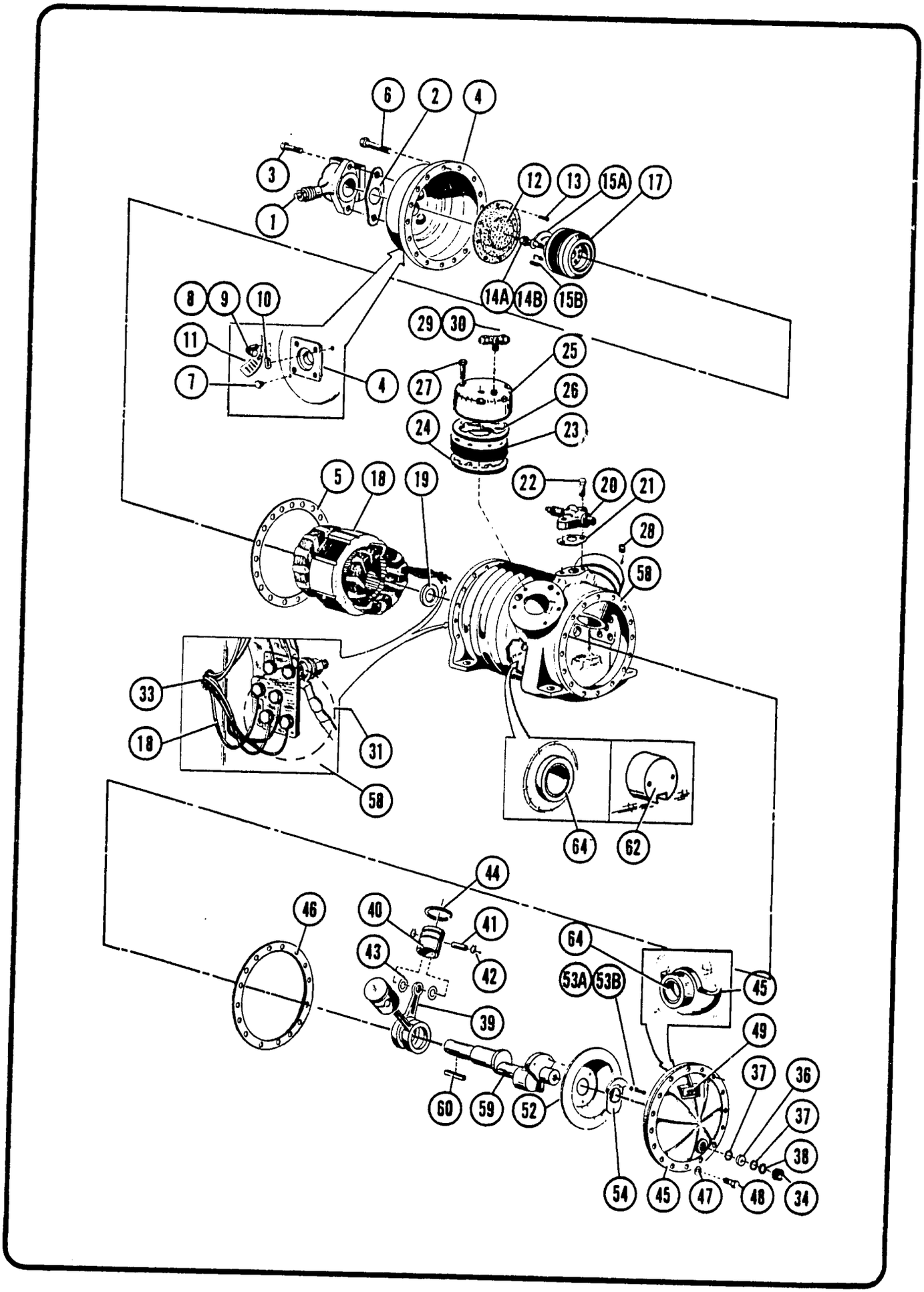

1052

D/B METIC 2 CYLINDER INTEGRAL HERMETIC COMPRESSORS
CURRENT PRODUCTION MODELS

				60 HZ.											50 HZ.										
			SPECIFICATIONS DISPL. (CFH)	348		465			566			677		806	290		388	472			564			673	
			BORE X STROKE (IN)	$1\frac{13}{16} \times 1\frac{1}{8}$		$1\frac{13}{16} \times 1\frac{1}{2}$			$2 \times 1\frac{1}{2}$			$2\frac{3}{16} \times 1\frac{1}{2}$		$2\frac{3}{16} \times 1\frac{49}{64}$	$1\frac{13}{16} \times 1\frac{1}{8}$		$1\frac{13}{16} \times 1\frac{1}{2}$	$2 \times 1\frac{1}{2}$			$2\frac{3}{16} \times 1\frac{1}{2}$			$2\frac{3}{16} \times 1\frac{49}{64}$	
			COMPRESSOR MODEL	15H/CF/LF	20HF	15C/ELF	20H/CF/LF	30HF	15L	20C/ELF	30CF	20L	30H/LF	32C/ELF	15HF5	15H5/CF5/LF5	20HF5	15C5/ELF5	20H5/CF5/LF5	30HF5	15L5	20C5/ELF5	30CF5	22L5	32H5/LF5
	DESCRIPTION		PART NO	QUANTITY PER MODEL																					
1	Valve, Suction Service		VAL373					1			1		1	1			1		1			1		1	1
			VAL615	1	1	1	1		1	1		1			1	1		1		1	1		1		
2	Gasket, Suction Service Valve		GKT340					1			1		1	1			1		1	1		1		1	1
			GKT398	1	1	1	1		1	1		1			1	1		1			1		1		
3	Screw, Suction Service Valve		011P17	2	2	2	2		2	2		2			2	2		2			2		2		
			014P17					2			2		2	2			2		2	2		2		2	2
4	Cover, Motor End		COV56	1	1	1	1		1	1		1			1	1		1			1		1		
			COV58					1			1		1	1			1		1	1		1		1	1
5	Gasket, End Cover		GA1011	1	1	1	1	1	1	1	1	1	1	1	1	1	1	1	1	1	1	1	1	1	1
6	Screw, End Cover		011P13	16	16	16	16	16	16	16	16	16	16	16	16	16	16	16	16	16	16	16	16	16	16
7	Plug, End Cover		055P71	1	1	1	1	1	1	1	1	1	1	1	1	1	1	1	1	1	1	1	1	1	1
8	Elbow, End Cover		072P01	1	1	1	1	1	1	1	1	1	1	1	1	1	1	1	1	1	1	1	1	1	1
9	Cap, Elbow		0212P02	2	2	2	2	2	2	2	2	2	2	2	2	2	2	2	2	2	2	2	2	2	2
10	Tag I.D.		—	1	1	1	1	1	1	1	1	1	1	1	1	1	1	1	1	1	1	1	1	1	1
11	Tag I.D.		—	1	1	1	1	1	1	1	1	1	1	1	1	1	1	1	1	1	1	1	1	1	1
12	Filter, Suction		FLR16	1	1	1	1	1	1	1	1	1	1	1	1	1	1	1	1	1	1	1	1	1	1
13	Screw, Filter		SCR69	4	4	4	4	4	4	4	4	4	4	4	4	4	4	4	4	4	4	4	4	4	4
14	Lockwasher	A	012P215	1	1	1	1	1	1	1	1	1	1	1	1	1	1	1	1	1	1	1	1	1	1
	Screw	B	012P19	1	1	1	1	1	1	1	1	1	1	1	1	1	1	1	1	1	1	1	1	1	1
15	Counterweight, Rotor	A	GA1021								1		1						1	1		1			
			GA1049	1	1										1										
			GA1050			1	1	1	1	1		1				1	1	1			1		1		
			GA1289											1										1	1
	Counterweight Pin	B	0102G27	1	1	1	1	1	1	1	1	1	1	1	1	1	1	1	1	1	1	1	1	1	1
17	Rotor		—	CONSULT FACTORY																					
18	Stator		—	CONSULT FACTORY																					
19	Washer, Outer Thrust		GA1017	1	1	1	1	1	1	1	1	1	1	1	1	1	1	1	1	1	1	1	1	1	1
20	Valve, Discharge Service		VAL363	1	1	1	1	1	1	1	1	1	1	1	1	1	1	1	1	1	1	1	1	1	1
21	Gasket, Discharge Valve		GKT398	1	1	1	1	1	1	1	1	1	1	1	1	1	1	1	1	1	1	1	1	1	1
22	Screw, Discharge Valve		011P17	2	2	2	2	2	2	2	2	2	2	2	2	2	2	2	2	2	2	2	2	2	2
23	Valve Plate Assembly		GB1042	(2) ALL MODELS - SEE PAGE 45																					
24	Gasket Valve Plate (See Page 46)		GKT370	2	2	2	2	2							2	2	2								
			GKT371						2	2	2							2	2	2					
			GKT372									2	2	2							2	2	2	2	2
25	Head, Valve RH		GC1003	1	1	1	1	1	1	1	1	1	1	1	1	1	1	1	1	1	1	1	1	1	1
	Head, Valve LH		GC1007	1	1	1	1	1	1	1	1	1	1	1	1	1	1	1	1	1	1	1	1	1	1
26	Gasket, Head		GKT343	2	2	2	2	2	2	2	2	2	2	2	2	2	2	2	2	2	2	2	2	2	2
27	Screw, Head		011P17	12	12	12	12	12	12	12	12	12	12	12	12	12	12	12	12	12	12	12	12	12	12
28	Plug, Head		055P80	1	1	1	1	1	1	1	1	1	1	1	1	1	1	1	1	1	1	1	1	1	1
29*	Tee, Head		GA1612	1	1	1	1	1	1	1	1	1	1	1	1	1	1	1	1	1	1	1	1	1	1
30	Cap, Tee		0212P02	2	2	2	2	2	2	2	2	2	2	2	2	2	2	2	2	2	2	2	2	2	2
31	Terminal Post Assembly		—	QUANTITIES WILL VARY WITH 1ϕ, 3ϕ 230/208/460/575 MOTORS FOR KIT INFORMATION SEE PAGE 49																					

1053

D/B METIC 2 CYLINDER INTEGRAL HERMETIC COMPRESSORS
CURRENT PRODUCTION MODELS CONTINUED

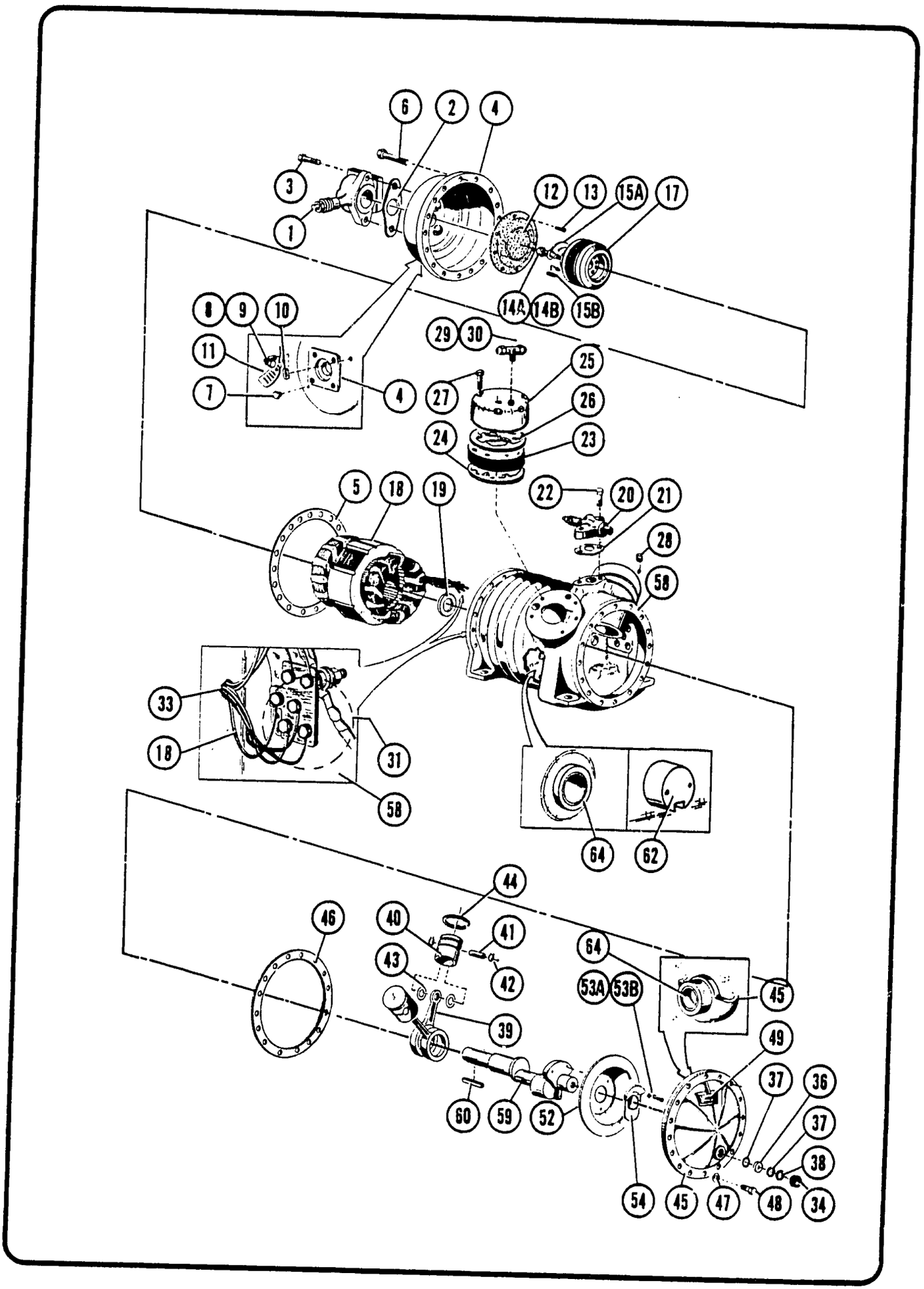

1054

D/B METIC 2 CYLINDER INTEGRAL HERMETIC COMPRESSORS
CURRENT PRODUCTION MODELS CONTINUED

				60 HZ.											50 HZ.										
			SPECIFICATIONS DISPL. (CFH)	348		465			566			677		806	290		388	472			564			673	
			SPECIFICATIONS BORE X STROKE (IN)	1 13/16 x 1 1/8		1 13/16 x 1 1/2			2 x 1 1/2			2 3/16 x 1 1/2		2 3/16 x 1 49/64	1 13/16 x 1 1/8		1 13/16 x 1 1/2	2 x 1 1/2			2 3/16 x 1 1/2			2 3/16 x 1 49/64	
			COMPRESSOR MODEL	15H/CF/LF	20HF	15C/ELF	20H/CF/LF	30HF	15L	20C/ELF	30CF	20L	30H/LF	32C/ELF	15HF5	15H5/CF5/LF5	20HF5	15C5/ELF5	20H5/CF5/LF5	30HF5	15L5	20C5/ELF5	30CF5	22L5	32H5/LF5
	DESCRIPTION		PART NO.	QUANTITY PER MODEL																					
33	Bushing		BUS39	1	1	1	1	1	1	1	1	1	1	1	1	1	1	1	1	1	1	1	1	1	1
34	Retainer, Sight Glass		GA211	1	1	1	1	1	1	1	1	1	1	1	1	1	1	1	1	1	1	1	1	1	1
36	Sight Glass		GA210	1	1	1	1	1	1	1	1	1	1	1	1	1	1	1	1	1	1	1	1	1	1
37	Gasket, Sight Glass		GA213	2	2	2	2	2	2	2	2	2	2	2	2	2	2	2	2	2	2	2	2	2	2
38	Ring, Friction		GA212	1	1	1	1	1	1	1	1	1	1	1	1	1	1	1	1	1	1	1	1	1	1
39	Rod Connecting		GA1000	2	2	2	2	2	2	2	2	2	2		2	2	2	2	2	2	2	2	2		
			ROD50											2										2	2
40	Piston & Pin		GB1001									2	2	2							2	2	2	2	2
			GB1002	2	2	2	2	2							2	2	2								
			GB1003						2	2	2							2	2	2					
41	Pin, Piston **		PIN39	2	2	2	2	2							2	2	2								
			PIN40						2	2	2							2	2	2					
			PIN41									2	2	2							2	2	2	2	2
42	Retainer, Pin		0580P11	4	4	4	4	4	4	4	4	4	4	4	4	4	4	4	4	4	4	4	4	4	4
43	Washer, Piston		GA1013	4	4	4	4	4	4	4	4	4	4	4	4	4	4	4	4	4	4	4	4	4	4
44	Ring, Piston		GA1014									2	2	2							2	2	2	2	2
			GA1026						2	2	2							2	2	2					
			GA1027	2	2	2	2	2							2	2	2								
45	Cover, End		GD1001	1	1	1	1	1	1	1	1	1	1	1	1	1	1	1	1	1	1	1	1	1	1
46	Gasket, End Cover		GA1011	1	1	1	1	1	1	1	1	1	1	1	1	1	1	1	1	1	1	1	1	1	1
47	Seal		GKT341	1	1	1	1	1	1	1	1	1	1	1	1	1	1	1	1	1	1	1	1	1	1
48	Screw, End Cover		011P13	16	16	16	16	16	16	16	16	16	16	16	16	16	16	16	16	16	16	16	16	16	16
49	I.D. Tag		—	1	1	1	1	1	1	1	1	1	1	1	1	1	1	1	1	1	1	1	1	1	1
52	Slinger, Oil		FWH16											1										1	1
			GB1000	1	1	1	1	1	1	1	1	1	1		1	1	1	1	1	1	1	1	1		
53	Slinger, Screw	A	SCR30	1	1	1	1	1	1	1	1	1	1	1	1	1	1	1	1	1	1	1	1	1	1
			SCR31	2	2	2	2	2	2	2	2	2	2	2	2	2	2	2	2	2	2	2	2	2	2
	Lock Washer	B	010P01	3	3	3	3	3	3	3	3	3	3	3	3	3	3	3	3	3	3	3	3	3	3
54	Counterweight, Slinger		GA1177	1	1										1										
			GA1178			1	1	1								1	1								
			GA1179						1	1	1	1	1					1	1	1	1	1	1		
58	Crankcase **		CCS42T1	1	1										1										
			CCS42T2			1	1									1									
			CCS42T3						1	1								1					1		
			CCS42T4									1									1				
			CCS43T1					1									1								
			CCS43T2								1								1	1		1		1	1
			CCS43T3										1	1											
59	Crankshaft		CKS52											1										1	1
			GC1000			1	1	1	1	1	1	1	1			1	1	1	1	1	1	1	1		
			GC1001	1	1										1										
60	Key, Shaft		GA1029	1	1	1	1	1	1	1	1	1	1	1	1	1	1	1	1	1	1	1	1	1	1
62	Valve, Foam Control		VAL496	1	1	1	1	1	1	1	1	1	1		1	1	1	1	1	1	1	1	1	1	1
64	Bearing *		GA1037	1	1	1	1	1	1	1	1	1	1	1	1	1	1	1	1	1	1	1	1	1	1
			GA1038	1	1	1	1	1	1	1	1	1	1	1	1	1	1	1	1	1	1	1	1	1	1

* Field replacement of bearings require line boring. Refer to National Service Bulletin SR116.
** Not available as separate item.

D/B METIC 3 AND 4 CYLINDER HERMETIC COMPRESSORS
CURRENT PRODUCTION MODELS

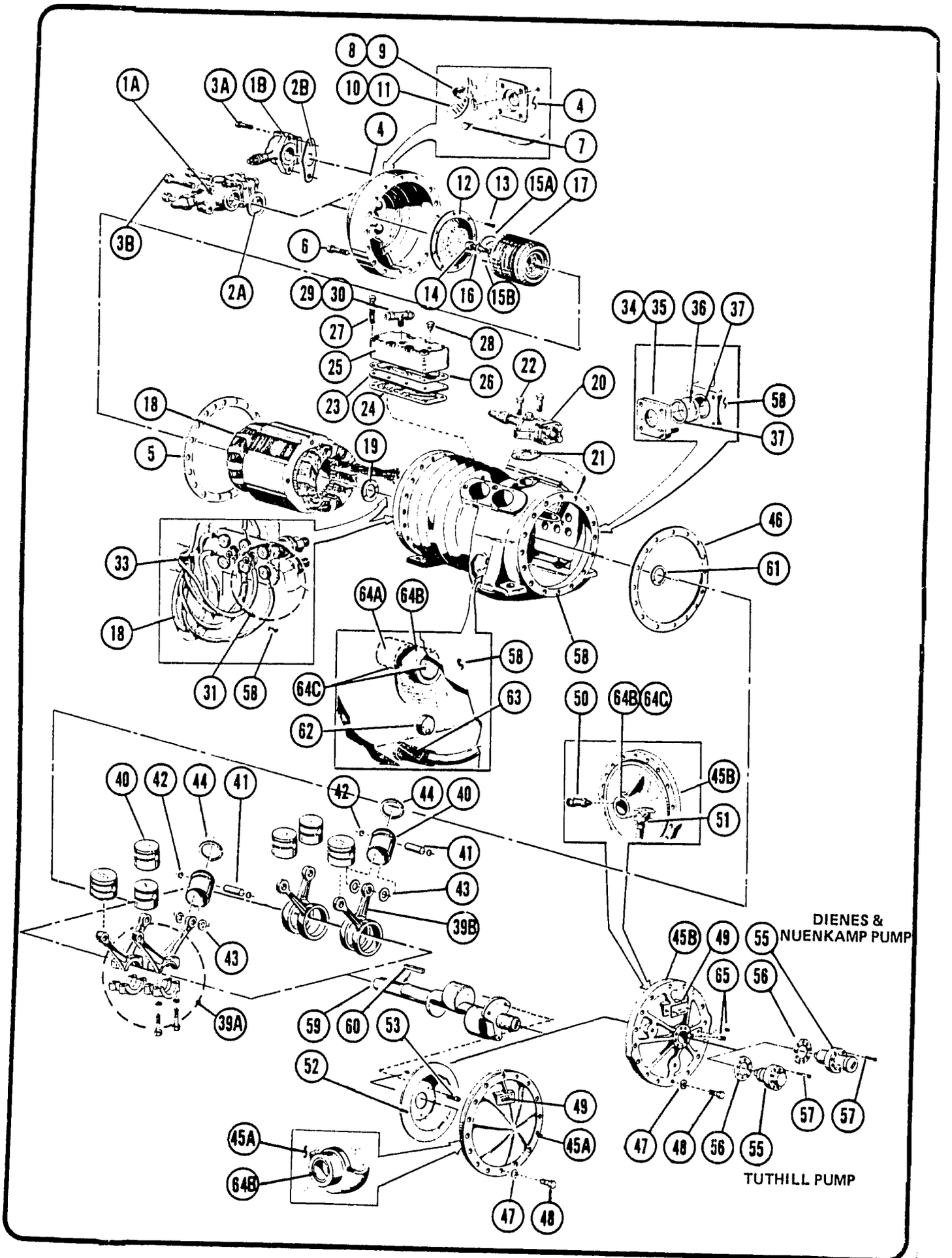

D/B METIC 3 AND 4 CYLINDER HERMETIC COMPRESSORS
CURRENT PRODUCTION MODELS

				60 HZ.														50 HZ.										
			SPECIFICATIONS DISPL. (CFH)	846	930		1128			1356			1680			2000		846	940		1128			1400			1667	
			BORE X STROKE (IN)	2 x 1 1/2	1 13/16 x 1 1/2		2 x 1 1/2			2 3/16 x 1 1/2			2 x 2 3/16			2 3/16 x 2 3/16		2 3/16 x 1 1/2	2 x 1 1/2		2 3/16 x 1 1/2			2 x 2 3/16			2 3/16 x 2 3/16	
			COMP. MODEL	52HF †	30C/ELF	50CF	30L	50H/LF	75HF	50C/ELF	75CF	100PHF	51PL	76PH/C/LF	111PHF/CF	77PC/ELF	151PHF/CF	52HF5 †	30C5/ELF5	50CF5	30L5	50H5/LF5	75HF5	41PL5	51PH5/C5/LF5	101PHF5/CF5	62PC5/ELF5	111PH5/CF5
DESCRIPTION			PART NO.	QUANTITY PER MODEL																								
1	Valve, Suction Service	A	VAL59											1	1	1	1								1	1	1	1
		B	VAL373		1		1																					
			VAL374	1		1		1	1	1	1	1	1					1	1	1	1	1	1	1				
2	Gasket, Suction Service Valve	A	GKT62											1	1	1	1								1	1	1	1
		B	GKT340	1	1	1	1	1	1	1	1	1	1					1	1	1	1	1	1	1				
3	Screw, Suction Service Valve	A	014P17	2	2	2	2	2	2	2	2	2	2					2	2	2	2	2	2	2				
		B	014P29											4	4	4	4								4	4	4	4
4	Cover, Motor End		COV59		1		1																					
			COV60	1		1		1	1	1	1	1	1					1	1	1	1	1	1	1				
			COV61											1		1									1		1	
			COV62												1		1									1		1
5	Gasket, End Cover		GA1209	1	1	1	1	1	1	1	1	1	1	1	1	1	1	1	1	1	1	1	1	1	1	1	1	1
6	Screw, End Cover		012P13	16	16	16	16	16	16	16	16	16	16	16		16		16	16	16	16	16	16	16	16		16	
			012P27												16		16									16		16
7	Plug, End Cover		055P61	1	1	1	1	1	1	1	1	1	1	1	1	1	1	1	1	1	1	1	1	1	1	1	1	1
8	Elbow, End Cover		072P01	1	1	1	1	1	1	1	1	1	1	1	1	1	1	1	1	1	1	1	1	1	1	1	1	1
9	Cap, Elbow		0212P02	1	1	1	1	1	1	1	1	1	1	1	1	1	1	1	1	1	1	1	1	1	1	1	1	1
10	Tag I.D.		—	1	1	1	1	1	1	1	1	1	1	1	1	1	1	1	1	1	1	1	1	1	1	1	1	1
11	Tag I.D.		—	2	2	2	2	2	2	2	2	2	2	2	2	2	2	2	2	2	2	2	2	2	2	2	2	2
12	Filter, Suction		FLR16	1	1	1	1	1	1	1	1	1	1	1	1	1	1	1	1	1	1	1	1	1	1	1	1	1
13	Screw, Filter		SCR69	4	4	4	4	4	4	4	4	4	4	8	8	8	8	4	4	4	4	4	4	4	8	8	8	8
14	Lockwasher& Screw		—	1	1	1	1	1	1	1	1	1	1	1	1	1	1	1	1	1	1	1	1	1	1	1	1	1
15	Counterweight	A	GA1289	1	1	1	1	1	1	1	1	1						1	1	1	1	1	1					
	Pin, Rotor Ctw.	B	PIN80T4	1	1	1	1	1	1	1	1	1	1	1	1	1	1	1	1	1	1	1	1	1	1	1	1	1
16	Retainer, Rotor		RTR25										1	1	1	1	1							1	1	1	1	1
17	Rotor		—	CONSULT FACTORY																								
18	Stator		—	CONSULT FACTORY																								
19	Washer, Outer Thrust		GA1968	1	1	1	1	1	1	1	1	1	1	1	1	1	1	1	1	1	1	1	1	1	1	1	1	1
20	Valve, Discharge Service		VAL363		1		1																					
			VAL372										1												1	1	1	1
			VAL373											1	1	1	1											
			VAL615	1		1		1	1	1	1	1						1	1	1	1	1	1					
21	Gasket, Discharge Service		GKT340										1	1	1	1	1							1	1	1	1	1
			GKT398	1	1	1	1	1	1	1	1	1						1	1	1	1	1	1					
22	Screw Discharge Valve		011P17										2	2	2	2	2							2	2	2	2	2
			014P17	2	2	2	2	2	2	2	2	2						2	2	2	2	2	2					
23	Valve Plate Assembly		GC1162	(2) ALL MODELS - SEE PAGE 45																								
24	Gasket, Valve Plate See Page 46		GKT373		2	2																						
			GKT374	2			2	2	2				2	2	2				2	2				2	2	2		
			GKT375							2	2	2				2	2	2			2	2	2				2	2
25	Head, Valve - RH		GD1191	1	1	1	1	1	1	1	1	1	1	1	1	1	1	1	1	1	1	1	1	1	1	1	1	1
	Head, Valve - LH		GD1192	1	1	1	1	1	1	1	1	1	1	1	1	1	1	1	1	1	1	1	1	1	1	1	1	1
26	Gasket, Head		GB1089	(2) ALL MODELS - SEE PAGE 47																								
27	Screw, Head		012P27	20	20	20	20	20	20	20	20	20	20	20	20	20	20	20	20	20	20	20	20	20	20	20	20	20
28	Plug		055P61	2	2	2	2	2	2	2	2	2	2	2	2	2	2	2	2	2	2	2	2	2	2	2	2	2
29	Tee		GA1612	1	1	1	1	1	1	1	1	1	1	1	1	1	1	1	1	1	1	1	1	1	1	1	1	1
30	Cap		0212P02	2	2	2	2	2	2	2	2	2	2	2	2	2	2	2	2	2	2	2	2	2	2	2	2	2
31	Terminal Post Assembly		—	QUANTITIES WILL VARY WITH 1ϕ, 3ϕ 230/208/460/575V MOTORS FOR KIT INFORMATION SEE PAGE 49																								

† = 3 Cylinder Models

1057

D/B METIC 3 AND 4 CYLINDER HERMETIC COMPRESSORS
CURRENT PRODUCTION MODELS CONTINUED

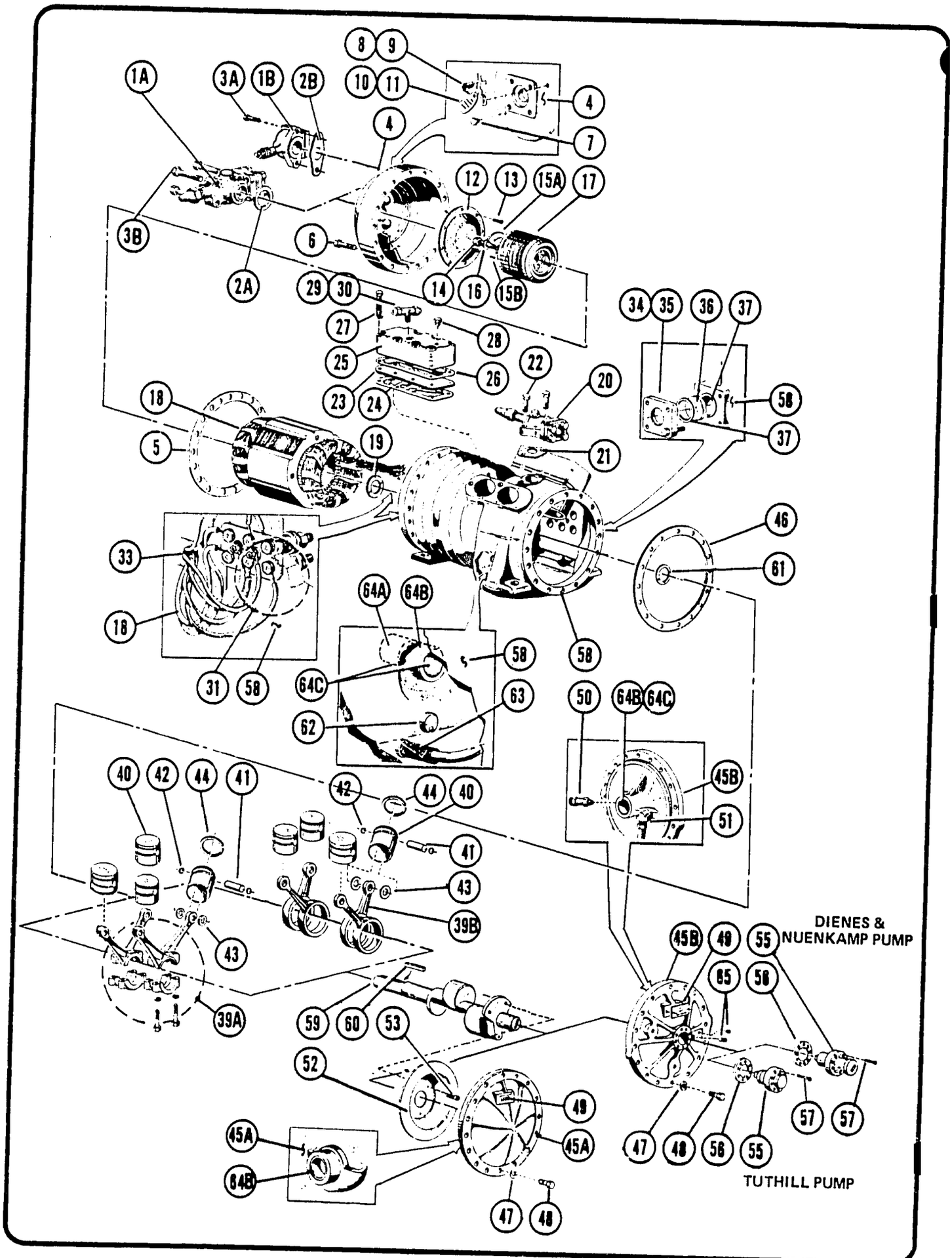

1058

D/B METIC 3 AND 4 CYLINDER HERMETIC COMPRESSORS
CURRENT PRODUCTION MODELS CONTINUED

				60 HZ.														50 HZ.										
			SPECIFICATIONS DISPL. (CFH)	846	930		1128			1356			1680			2000		846	940		1128			1400			1667	
			SPECIFICATIONS BORE X STROKE (IN)	2 x 1 1/2	1 13/16 x 1 1/2		2 x 1 1/2			2 3/16 x 1 1/2			2 x 2 3/16			2 3/16 x 2 3/16		2 3/16 x 1 1/2	2 x 1 1/2		2 3/16 x 1 1/2			2 x 2 3/16			2 3/16 x 2 3/16	
			COMP. MODEL	52HF†	30C/ELF	50CF	30L	50H/LF	75HF	50C/ELF	75CF	100PHF	51PL	76PH/C/LF	111PHF/CF	77PC/ELF	151PHF/CF	52HF5†	30C5/ELF5	50CF5	30L5	50H5/LF5	75HF5	41PL5	51PH5/C5/LF5	101PHF5/CF5	62PC5/ELF5	111PH5/CF5
	DESCRIPTION		PART NO.	QUANTITY PER MODEL																								
33	Bushing		BUS39	1	1	1	1	1	1	1	1	1	1	1	1	1	1	1	1	1	1	1	1	1	1	1	1	1
34	Retainer, Sight Glass		GB1091	1	1	1	1	1	1	1	1	1	1	1	1	1	1	1	1	1	1	1	1	1	1	1	1	1
35	Screw, Retainer		011P11	4	4	4	4	4	4	4	4	4	4	4	4	4	4	4	4	4	4	4	4	4	4	4	4	4
36	Sight Glass		GA1228	1	1	1	1	1	1	1	1	1	1	1	1	1	1	1	1	1	1	1	1	1	1	1	1	1
37	Gasket, Sight Glass		GA1233	2	2	2	2	2	2	2	2	2	2	2	2	2	2	2	2	2	2	2	2	2	2	2	2	2
39	Rod, Connecting	A	ROD79										4	4	4	4	4							4	4	4	4	4
		B	GC1156	4	4	4	4	4	4	4	4	4						4	4	4	4	4	4					
40	Piston & Pin		GB1001							4	4	4				4	4	3			4	4	4				4	4
			GB1002		4	4																						
			GB1003	3			4	4	4				4	4	4				4	4				4	4	4		
			GB1368	1																								
			GB1369															1										
41	Pin, Piston**		PIN39		4	4																						
			PIN40	4			4	4	4				4	4	4				4	4				4	4	4		
			PIN41							4	4	4				4	4	4			4	4	4				4	4
42	Retainer, Piston Pin		0580P11	8	8	8	8	8	8	8	8	8	8	8	8	8	8	8	8	8	8	8	8	8	8	8	8	8
43	Washer, Piston		GA1013	8	8	8	8	8	8	8	8	8	8	8	8	8	8	8	8	8	8	8	8	8	8	8	8	8
44	Ring, Piston		GA1014							4	4	4				4	4	4										
			GA1026	4			4	4	4				4	4	4				4	4				4	4	4		
			GA1027		4	4															4	4	4				4	4
45	Cover, End	A	GD1047T1	1	1	1	1	1	1	1	1							1	1	1	1	1						
		B	GD1218T1										1	1	1	1	1							1	1	1	1	1
			GD1218T2									1											1					
46	Gasket, End Cover		GA1209	1	1	1	1	1	1	1	1	1	1	1	1	1	1	1	1	1	1	1	1	1	1	1	1	1
47	Seal, Bolt		GKT342	1	1	1	1	1	1	1	1	1	1	1	1	1	1	1	1	1	1	1	1	1	1	1	1	1
48	Screw, End Cover		012P13	16	16	16	16	16	16	16	16	16	16	16	16	16	16	16	16	16	16	16	16	16	16	16	16	16
49	Tag, I.D.		—	1	1	1	1	1	1	1	1	1	1	1	1	1	1	1	1	1	1	1	1	1	1	1	1	1
50	Valve, Pressure Relief		GA1581									1	1	1	1	1	1							1	1	1	1	1
51	Elbow, Connecting		051P36									1	1	1	1	1	1							1	1	1	1	1
			051P52	1	1	1	1	1	1	1	1							1	1	1	1	1	1					
52	Slinger, Oil		GC1146T1	1	1	1	1	1	1	1	1							1	1	1	1	1	1					
53	Screw, Slinger		SCR30	3	3	3	3	3	3	3	3							3	3	3	3	3	3					
55	Pump, Oil		PMP85A									1	1	1	1	1	1							1	1	1	1	1
56	Gasket, Oil Pump		GKT312									1	1	1	1	1	1							1	1	1	1	1
57	Screw, Oil Pump		034P10									8	8	8	8	8	8							8	8	8	8	8
58	Crankcase**		CCS45T1		1	1																						
			CCS45T2	1			1	1	1										1	1								
			CCS45T4							1	1	1						1			1	1	1					
			CCS45T7													1	1										1	1
			CCS45T8										1	1	1									1	1	1		
59	Crankshaft		CKS56T1										1	1	1	1	1							1	1	1	1	1
			GD1117	1	1	1	1		1	1	1	1						1	1	1	1	1	1					
60	Key, Shaft		GA1028										1											1				
			GA1030	1	1	1	1			1	1	1		1	1	1	1	1	1	1	1	1	1		1	1	1	1
61	Washer, Inner Thrust		GA1966	1	1	1	1	1	1	1	1	1						1	1	1	1	1	1					
			GA1969										1	1	1	1	1							1	1	1	1	1
62	Valve, Foam Control		VAL496	1	1	1	1	1	1	1	1	1	1	1	1	1	1	1	1	1	1	1	1	1	1	1	1	1
63	Strainer, Oil Assem.		GB1381									1	1	1	1	1	1							1	1	1	1	1
64	Bearing*	A	BRG123										1	1	1	1	1							1	1	1	1	1
		B	GA1550										2	2	2	2	2							2	2	2	2	2
		C	GA1554	3	3	3	3	3	3	3	3	3						3	3	3	3	3	3					
65	Plug, End Cover		055P71	2	2	2	2	2	2	2	2	2	2	2	2	2	2	2	2	2	2	2	2	2	2	2	2	2

*Field replacement of bearings require line boring. Refer to National Service Bulletin SR116.
**Not available as separate item.
† = 3 cylinder models

D/B METIC 3 AND 4 CYLINDER HERMETIC COMPRESSORS
OUT OF PRODUCTION MODELS

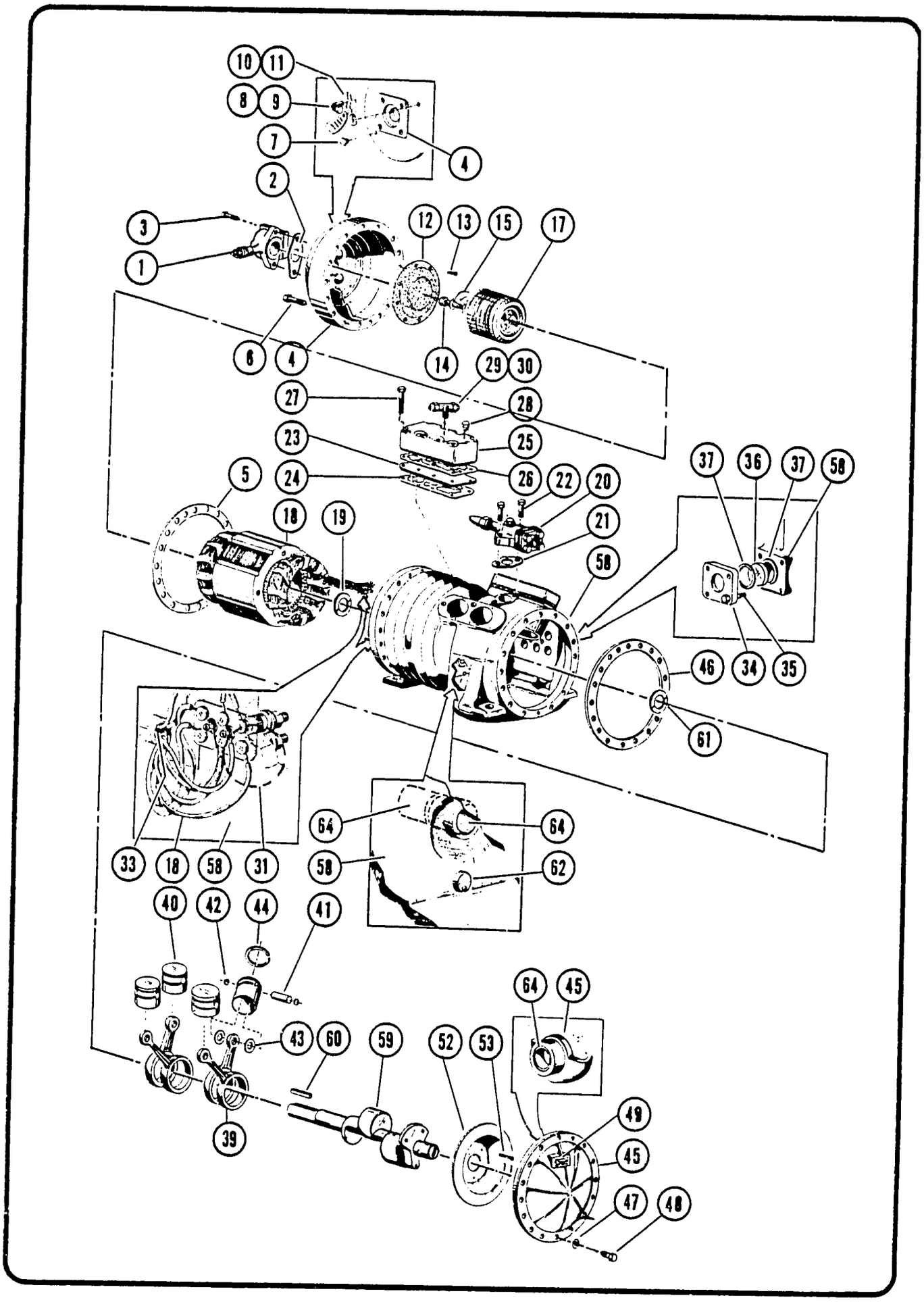

D/B METIC 3 AND 4 CYLINDER HERMETIC COMPRESSORS
OUT OF PRODUCTION MODELS

			60 HZ.	50 HZ.	
		SPECIFICATIONS: DISPL. (CFH)	1356	673	
		SPECIFICATIONS: BORE X STROKE (IN)	$2^{3}/_{16} \times 1^{1}/_{2}$	$2 \times 1^{1}/_{2}$	
		SPECIFICATIONS: COMP. MODEL	30 EL	20 L5	30 H/LF5
DESCRIPTION		PART NO.	4Cyl	3Cyl	
1	Valve, Suction Service	VAL373	1	1	1
2	Gasket, Suction Valve	GKT340	1	1	1
3	Screw, Suction Valve	014P17	2	2	2
4	Cover, Motor End	COV59	1	1	1
5	Gasket, End Cover	GA1209	1	1	1
6	Screw, End Cover	012P13	16	16	16
7	Plug, End Cover	055P61	1	1	1
8	Elbow, End Cover	072P01	1	1	1
9	Cap, Elbow	0212P02	2	2	2
10	Tag Identification	—	1	1	1
11	Tag Identification	—	1	1	1
12	Filter, Suction	FLR16	1	1	1
13	Screw, Filter	SCR69	4	4	4
14	Lockwasher & Screw	—	1	1	1
15	Counterweight	GA1289	1	1	1
17	Rotor	—	CONSULT FACTORY		
18	Stator	—	CONSULT FACTORY		
19	Washer, Outer Thrust	GA1968	1	1	1
20	Valve, Discharge Service	VAL363	1	1	1
21	Gasket Discharge Valve	GKT398	1	1	1
22	Screw, Discharge Valve	011P17	2	2	2
23	Valve Plate Assembly	GC1162	2	2	2
24	Gasket, Valve Plate	GKT374		2	2
		GKT375	2		
25	Head, Valve RH	GD1191	1	1	1
	Head, Valve LH	GD1192	1	1	1
26	Gasket, Head	GB1089	2	2	2
27	Screw, Head	012P27	20	20	20
28	Plug	055P61	1	1	1
29	Tee	GA1612	1	1	1
30	Cap	0212P02	2	2	2
31	Post, Terminal Assembly	—	Quantities will vary with ϕ and voltage See page 49 for kit information		

			60 HZ.	50 HZ.	
		SPECIFICATIONS: DISPL. (CFH)	1356	673	
		SPECIFICATIONS: BORE X STROKE (IN)	$2^{3}/_{16} \times 1^{1}/_{2}$	$2 \times 1^{1}/_{2}$	
		SPECIFICATIONS: COMP. MODEL	30 EL	20 L5	30 H/LF5
DESCRIPTION		PART NO.	4Cyl	3Cyl	
33	Bushing	BUS39	1	1	1
34	Retainer, Sight Glass	GB1091	1	1	1
35	Screw, Retainer	011P11	4	4	4
36	Sight Glass	GA1228			
37	Gasket, Sight Glass	GA1233	2	2	2
39	Rod, Connecting	GC1156	4	4	4
40	Piston & Pin	GB1001	4		
		GB1003		3	3
		GB1368		1	1
41	Pin, Piston **	PIN40		4	4
		PIN41	4		
42	Retainer, Piston Pin	0580P11	8	8	8
43	Washer, Piston	GA1013	8	8	8
44	Ring, Piston	GA1014	4		
		GA1026		4	4
45	Cover, End	GD1047T1	1	1	1
46	Gasket, End Cover	GA1209	1	1	1
47	Seal, Bolt	GKT342	1	1	1
48	Screw, End Cover	012P13	16	16	16
49	Identification Tag	—	1	1	1
52	Slinger, Oil	GC1146T1	1	1	1
53	Screw, Slinger	SCR30	3	3	3
58	Crankcase **	CCS45T2		1	1
		CCS45T3	1		
59	Crankshaft	GD1117	1	1	1
60	Key Shaft	KIT369	1	1	1
61	Washer, Inner Thrust	GA1966	1	1	1
62	Valve Foam Control	VAL496	1	1	1
64	Bearing *	GA1554	3	3	3

*Field replacement of bearings require line boring. Refer to National Service Bulletin SR116.
**Not available as separate item.

D/B METIC 6 CYLINDER HERMETIC COMPRESSORS
CURRENT PRODUCTION MODELS

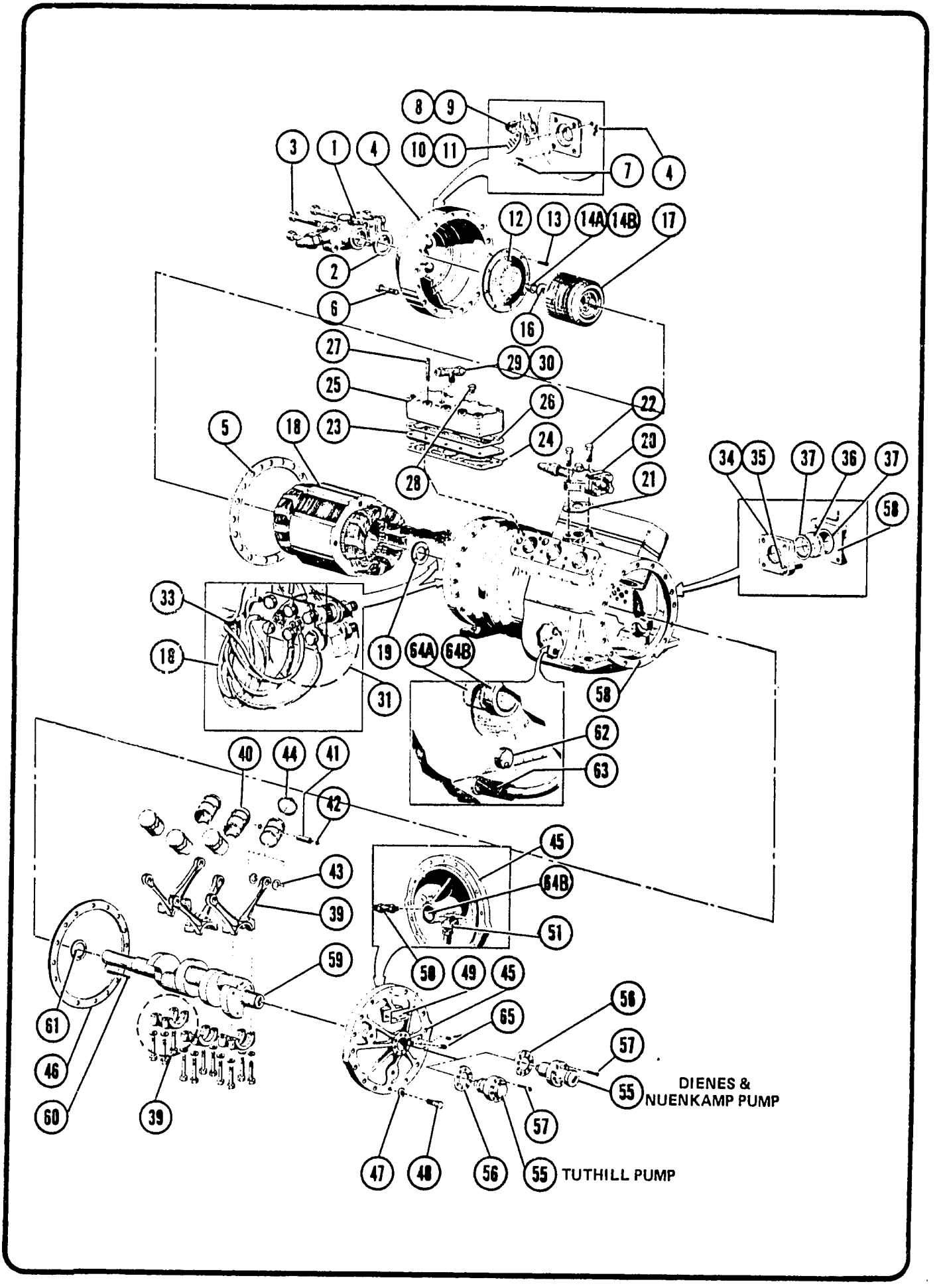

D/B METIC 6 CYLINDER HERMETIC COMPRESSORS
CURRENT PRODUCTION MODELS

				60 HZ.						50 HZ.					
			SPECIFICATIONS DISPL. (CFH)	2500			2997			2083			2500		
			SPECIFICATIONS BORE X STROKE	2 x 2 3/16			2 3/16 x 2 3/16			2 x 2 3/16			2 3/16 x 2 3/16		
			COMP. MODEL	76PL	101PH/C/ELF	201PHF/CF	104PL	154PH/C/ELF	204PHF/CF	61PL5	77PH5/C5/ELF5	151PH5/CF5	75PL5	101PH5/C5/ELF5	201PHF5/CF5
	DESCRIPTION		PART NO.	QUANTITY PER MODEL											
1	Valve, Suction Service		VAL59	1	1	1	1	1	1	1	1	1	1	1	1
2	Gasket, Suction Valve		GKT62	1	1	1	1	1	1	1	1	1	1	1	1
3	Screw, Suction Valve		014P29	4	4	4	4	4	4	4	4	4	4	4	4
4	Cover, Motor End		COV61	1						1					
			COV62		1	1	1	1			1	1	1	1	
			COV112						1						1
5	Gasket, End Cover		GA1209	1	1	1	1	1	1	1	1	1	1	1	1
6	Screw, End Cover		012P13	16						16					
			012P23		16	16	16	16			16	16	16	16	
			012P27						16						16
7	Plug, End Cover		055P61	1	1	1	1	1	1	1	1	1	1	1	1
8	Elbow, End Cover		072P01	1	1	1	1	1	1	1	1	1	1	1	1
9	Cap, Elbow		0212P02	2	2	2	2	2	2	2	2	2	2	2	2
10	Tag Identification		–	1	1	1	1	1	1	1	1	1	1	1	1
11	Tag Identification		–	2	2	2	2	2	2	2	2	2	2	2	2
12	Filter, Suction		FLR16	1	1	1	1	1	1	1	1	1	1	1	1
13	Screw, Filter		SCR69	8	8	8	8	8	8	8	8	8	8	8	8
14	Lockwasher	A	012P215	1	1	1	1	1	1	1	1	1	1	1	1
	Screw	B	012P23	1	1	1	1	1	1	1	1	1	1	1	1
16	Retainer, Rotor		RTR25	1	1	1	1	1	1	1	1	1	1	1	1
17	Rotor		–	CONSULT FACTORY											
18	Stator		–	CONSULT FACTORY											
19	Washer, Outer Thrust		GA1968	1	1	1	1	1	1	1	1	1	1	1	1
20	Valve, Discharge Service		VAL373	1	1	1	1	1		1	1	1	1	1	
			VAL374						1						1
21	Gasket, Discharge Valve		GKT340	1	1	1	1	1	1	1	1	1	1	1	1
22	Screw, Discharge Valve		014P17	2	2	2	2	2	2	2	2	2	2	2	2
23	Valve Plate Assembly		PLT2001A	(2) ALL MODELS – SEE PAGE 45											
24	Gasket, Valve Plate		GKT376	(2) ALL MODELS – SEE PAGE 46											
			GKT377												
25	Head, Valve RH		GD1189	1	1	1	1	1	1	1	1	1	1	1	1
	Head, Valve LH		GD1190	1	1	1	1	1	1	1	1	1	1	1	1
26	Gasket, Head		GC1150	(2) ALL MODELS – SEE PAGE 46											
27	Screw, Valve Head		012P27	20	20	20	20	20	20	20	20	20	20	20	20
28	Plug		055P61	1	1	1	1	1	1	1	1	1	1	1	1
29	Tee		GA1612	1	1	1	1	1	1	1	1	1	1	1	1
30	Cap		0212P02	2	2	2	2	2	2	2	2	2	2	2	2
31	Terminal Post Assembly		–	QUANTITIES WILL VARY WITH 1φ, 3φ, 575, 230/208V MOTORS SEE PAGE 49 FOR KIT INFORMATION											

1063

D/B METIC 6 CYLINDER HERMETIC COMPRESSORS
CURRENT PRODUCTION MODELS CONTINUED

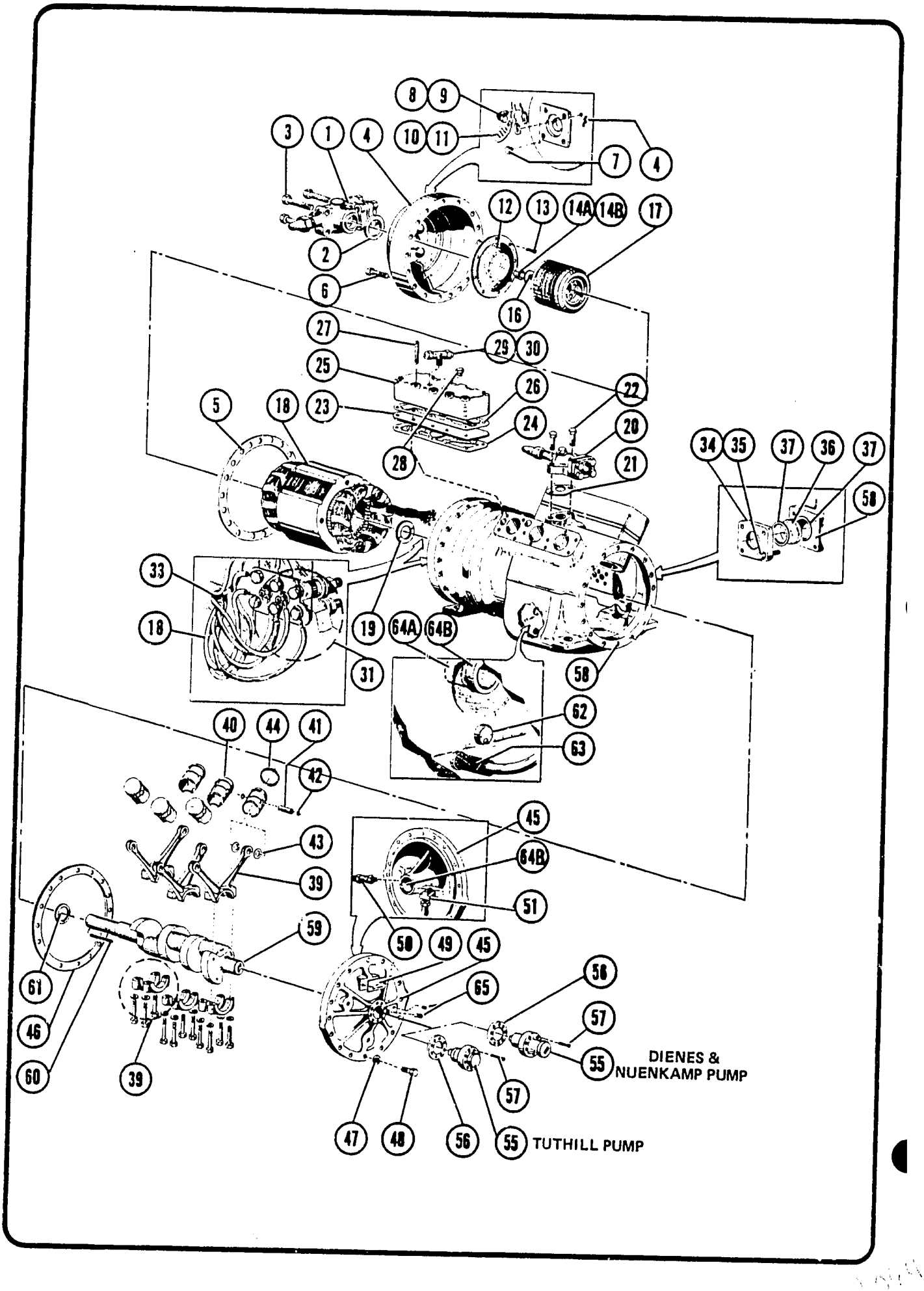

D/B METIC 6 CYLINDER HERMETIC COMPRESSORS
CURRENT PRODUCTION MODELS CONTINUED

			60 HZ.						50 HZ.					
SPECIFICATIONS	DISPL. (CFH)		2500			2997			2083			2500		
	BORE X STROKE (IN.)		2 x 2 3/16			2 3/16 x 2 3/16			2 x 2 3/16			2 3/16 x 2 3/16		
	COMP. MODEL		76PL	101PH/C/ELF	201PHF/CF	104PL	154PH/C/ELF	204PHF/CF	61PL5	77PH5/C5/ELF5	151PH5/CF5	75PL5	101PH5/C5/ELF5	201PHF5/CF5
	DESCRIPTION	PART NO.	QUANTITY PER MODEL											
33	Bushing	BUS39	1	1	1	1	1	1	1	1	1	1	1	1
34	Retainer, Sight Glass	GB1091	1	1	1	1	1	1	1	1	1	1	1	1
35	Screw, Retainer	011P11	4	4	4	4	4	4	4	4	4	4	4	4
36	Sight Glass	GA1228	1	1	1	1	1	1	1	1	1	1	1	1
37	Gasket, Sight Glass	GA1233	2	2	2	2	2	2	2	2	2	2	2	2
39	Rod, Connecting Assembly	ROD79	6	6	6	6	6	6	6	6	6	6	6	6
40	Piston & Pin	GB1001				6	6	6				6	6	6
		GB1003	6	6	6				6	6	6			
41	Pin, Piston **	PIN40	6	6	6				6	6	6			
		PIN41				6	6	6				6	6	6
42	Retainer, Piston Pin	0580P11	12	12	12	12	12	12	12	12	12	12	12	12
43	Washer, Piston	GA1013	12	12	12	12	12	12	12	12	12	12	12	12
44	Ring, Piston	GA1014				6	6	6				6	6	6
		GA1026	6	6	6				6	6	6			
45	Cover, End	GD1218T1	1	1	1	1	1	1	1	1	1	1	1	1
46	Gasket, End Cover	GA1209	1	1	1	1	1	1	1	1	1	1	1	1
47	Seal, Bolt	GKT342	1	1	1	1	1	1	1	1	1	1	1	1
48	Screw, End Cover	012P13	16	16	16	16	16	16	16	16	16	16	16	16
49	Identification Tag	–	1	1	1	1	1	1	1	1	1	1	1	1
50	Valve, Pressure Relief	GA1581	1	1	1	1	1	1	1	1	1	1	1	1
51	Elbow, Connecting	051P36	1	1	1	1	1	1	1	1	1	1	1	1
55	Pump, Oil	PMP85A	1	1	1	1	1	1	1	1	1	1	1	1
56	Gasket, Oil Pump	GKT312	1	1	1	1	1	1	1	1	1	1	1	1
57	Screw, Oil Pump	034P10	8	8	8	8	8	8	8	8	8	8	8	8
58	Crankcase **	CCS75AT1				1	1	1				1	1	1
		CCS75AT2	1	1	1				1	1	1			
59	Crankshaft	CKS53T1	1	1	1	1	1	1	1	1	1	1	1	1
60	Key, Shaft	GA1028	1	1	1	1	1		1	1	1	1	1	
		KEY10						1						1
61	Washer, Inner Thrust	GA1969	1	1	1	1	1	1	1	1	1	1	1	1
62	Valve, Foam Control	VAL496	1	1	1	1	1	1	1	1	1	1	1	1
63	Strainer, Oil Assem.	GB1381	1	1	1	1	1	1	1	1	1	1	1	1
64	Bearings * A	BRG123	1	1	1	1	1	1	1	1	1	1	1	1
	Bearings * B	GA1550	2	2	2	2	2	2	2	2	2	2	2	2
65	End Cover Plug	055P71	2	2	2	2	2	2	2	2	2	2	2	2

* Field replacement of bearings require line boring. Refer to National Service Bulletin SR11C.
** Not available as separate item.

D/B METIC 6 CYLINDER HERMETIC COMPRESSORS
OUT OF PRODUCTION MODELS

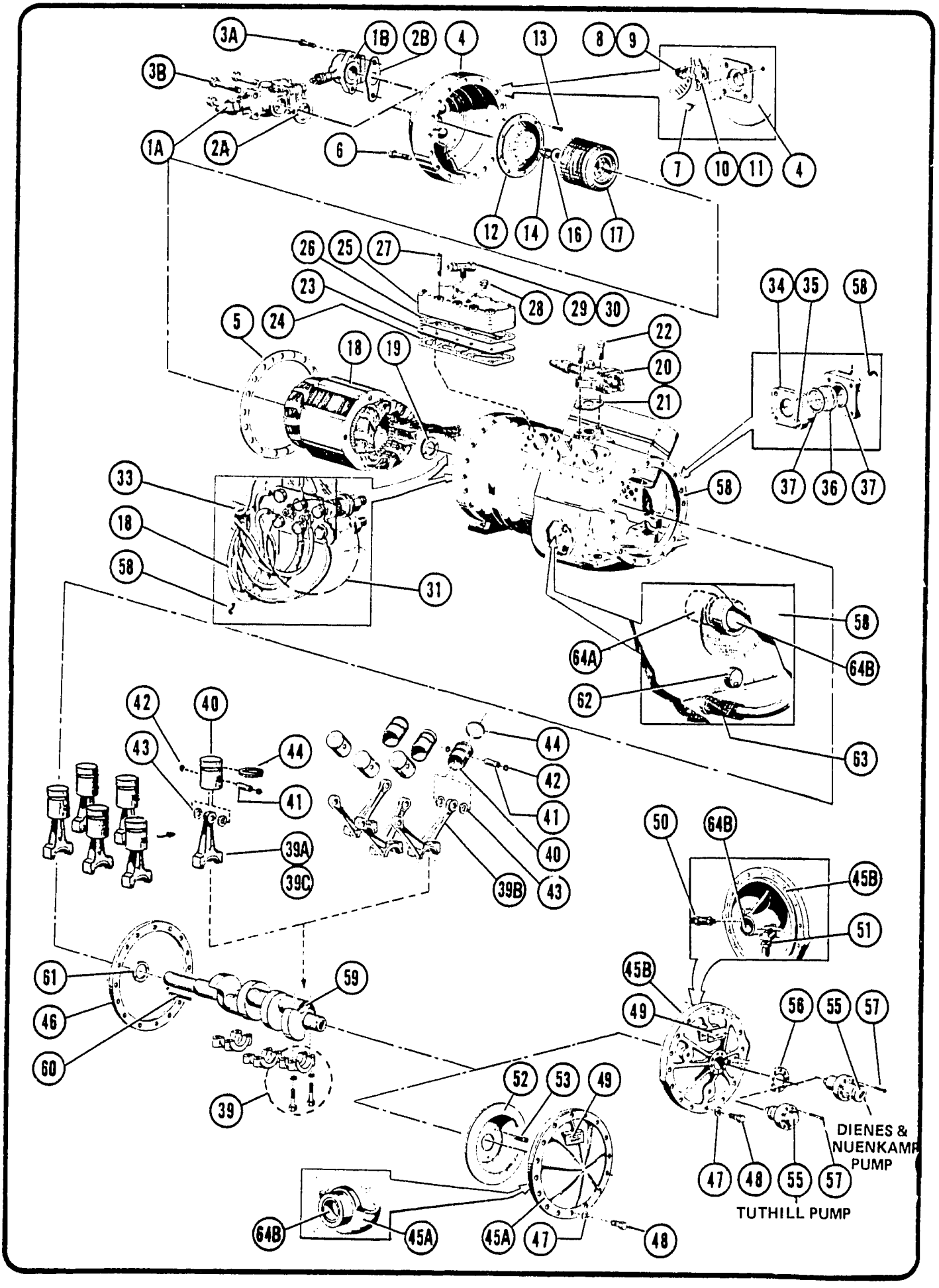

D/B METIC 6 CYLINDER HERMETIC COMPRESSORS
OUT OF PRODUCTION MODELS

				60 HERTZ												50 HERTZ											
SPECIFICATIONS			DISPL. (CFH)	1698			2034			2412				2997		1410				1698			2010			2487	
			BORE X STROKE (IN)	2 x 1 1/2			2 3/16 x 1 1/2			2 3/16 x 1 49/64				2 3/16 x 2 3/16		2 x 1 1/2				2 3/16 x 1 1/2			2 3/16 x 1 49/64			2 3/16 x 2 3/16	
			COMP. MODEL	50L	75H/LF	100PCF	50PEL	75PC/ELF	150PHF	75PL	100PH/C/ELF	150PCF	200PHF	174PCF		30EL5	50C/ELF5	75CF5	100PCF5	50PL5	75PH/LF5	100PHF5	50PEL5	75PC/ELF5	150PHF5	100PH/C/ELF5	200PHF5
	DESCRIPTION		PART NO.	QUANTITY PER MODEL																							
1	Valve, Suction Service	A	VAL59		1	1		1	1	1	1	1	1	1					1		1	1		1	1	1	1
			VAL83															1									
		B	VAL374	1			1									1	1			1			1				
2	Gasket Suction Valve	A	GKT62		1	1		1	1	1	1	1	1	1				1	1		1	1		1	1	1	1
		B	GKT340	1			1									1	1			1			1				
3	Screw, Suction Valve	A	014P17	2			2									2	2			2			2				
		B	014P29		4	4		4	4	4	4	4	4	4				4	4		4	4		4	4	4	4
4	Cover Motor End		COV112																								1
			COV60	1			1									1	1		1	1							
			COV61		1			1		1								1			1		1	1			
			COV62			1			1		1	1	1	1								1			1	1	
5	Gasket, End Cover		GA1209	1	1	1	1	1	1	1	1	1	1	1		1	1	1	1	1	1	1	1	1	1	1	1
6	Screw, End Cover		012P13	16	16	16	16	16		16						16	16	16	16	16	16		16	16			
			012P23						16		16	16	16	16								16			16	16	
			012P27																								16
7	Plug, End Cover		055P61	1	1	1	1	1	1	1	1	1	1	1		1	1	1	1	1	1	1	1	1	1	1	1
8	Elbow, End Cover		072P01	1	1	1	1	1	1	1	1	1	1	1		1	1	1	1	1	1	1	1	1	1	1	1
9	Cap, Elbow		0212P02	2	2	2	2	2	2	2	2	2	2	2		2	2	2	2	2	2	2	2	2	2	2	2
10	Tag, Identification		—	1	1	1	1	1	1	1	1	1	1	1		1	1	1	1	1	1	1	1	1	1	1	1
11	Tag, Identification		—	1	1	1	1	1	1	1	1	1	1	1		1	1	1	1	1	1	1	1	1	1	1	1
12	Filter, Suction		FLR16	1	1	1	1	1	1	1	1	1	1	1		1	1	1	1	1	1	1	1	1	1	1	1
13	Screw, Filter		SCR69	4	8	4	4	8	8	8	8	8	8	8		4	4	8	4	4	8	8	8	8	8	8	8
14	Lockwasher & Screw		—	1	1	1	1	1	1	1	1	1	1	1		1	1	1	1	1	1	1	1	1	1	1	1
16	Retainer, Rotor		RTR25	1	1	1	1	1	1	1	1	1	1	1		1	1	1	1	1	1	1	1	1	1	1	1
17	Rotor		—	CONSULT FACTORY																							
18	Stator		—	CONSULT FACTORY																							
19	Washer, Outer Thrust		GA1968	1	1	1	1	1	1	1	1	1	1	1		1	1	1	1	1	1	1	1	1	1	1	1
20	Valve, Discharge Service		VAL372	1			1									1	1	1		1			1				
			VAL373		1	1		1	1	1	1	1	1	1					1		1	1		1	1	1	1
21	Gasket, Discharge Valve		GKT340	1	1	1	1	1	1	1	1	1	1	1		1	1	1	1	1	1	1	1	1	1	1	1
22	Screw, Discharge valve		014P17	2	2	2	2	2	2	2	2	2	2	2		2	2	2	2	2	2	2	2	2	2	2	2
23	Valve Plate Assembly		PLT2001A	(2) ALL MODELS SEE PAGE 45																							
24	Gasket, Valve Plate		GKT376	2	2	2										2	2	2	2								
			GKT377				2	2	2	2	2	2	2	2						2	2	2	2	2	2	2	2
25	Head, Valve RH		GD1189	1	1	1	1	1	1	1	1	1	1	1		1	1	1	1	1	1	1	1	1	1	1	1
	Head, Valve LH		GD1190	1	1	1	1	1	1	1	1	1	1	1		1	1	1	1	1	1	1	1	1	1	1	1
26	Gasket, Head		GC1150	(2) ALL MODELS SEE PAGE 46																							
27	Screw, Valve Head		012P27	20	20	20	20	20	20	20	20	20	20	20		20	20	20	20	20	20	20	20	20	20	20	20
28	Plug		055P61	1	1	1	1	1	1	1	1	1	1	1		1	1	1	1	1	1	1	1	1	1	1	1
29	Tee		GA1612	1	1	1	1	1	1	1	1	1	1	1		1	1	1	1	1	1	1	1	1	1	1	1
30	Cap		0212P02	2	2	2	2	2	2	2	2	2	2	2		2	2	2	2	2	2	2	2	2	2	2	2
31	Terminal Post Assembly		—	QUANTITIES WILL VARY WITH ϕ AND VOLTAGE FOR KIT INFORMATION SEE PAGE 49																							

(064)

D/B METIC 6 CYLINDER HERMETIC COMPRESSORS
OUT OF PRODUCTION MODELS CONTINUED

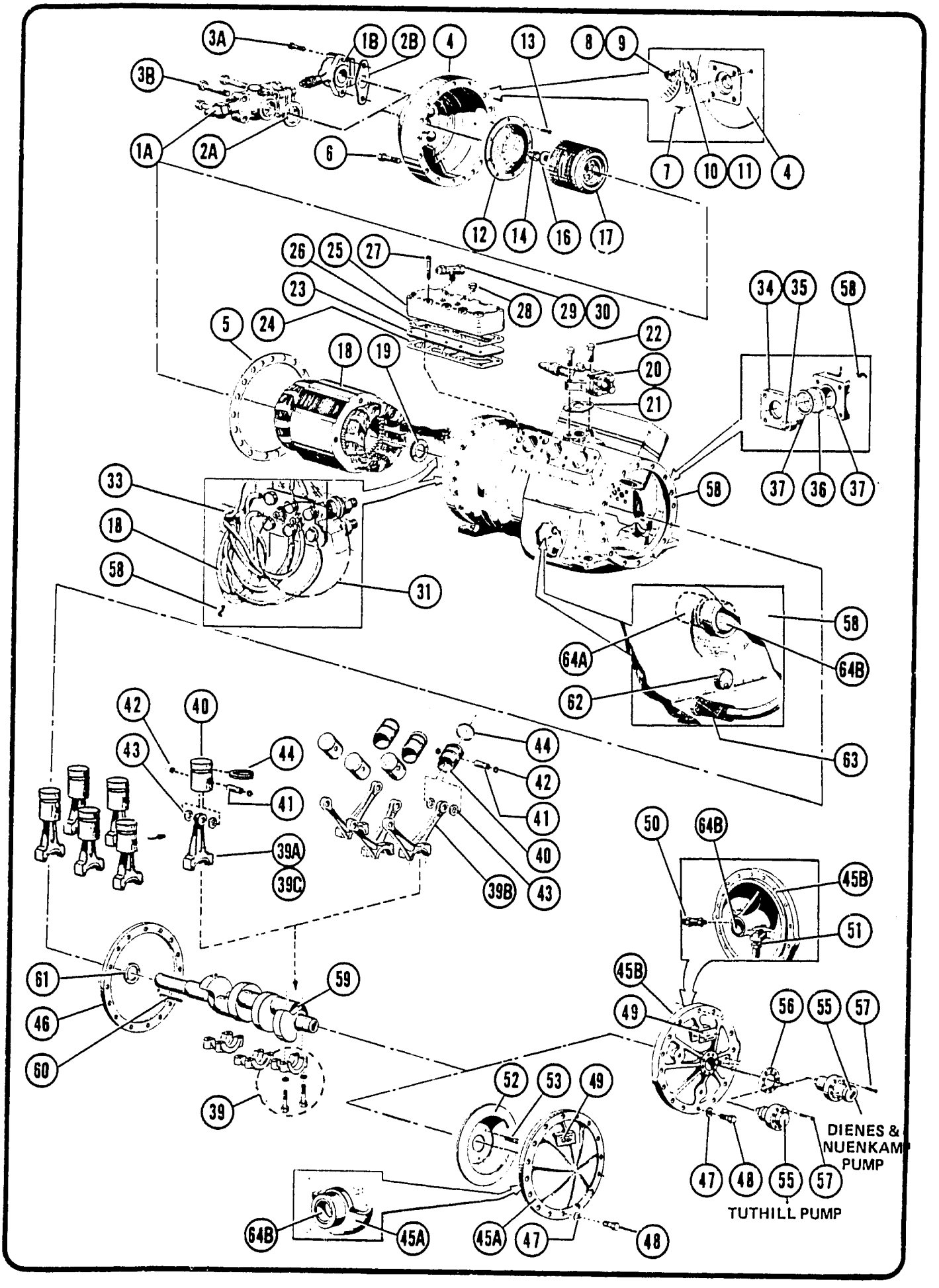

D/B METIC 6 CYLINDER HERMETIC COMPRESSORS
OUT OF PRODUCTION MODELS CONTINUED

				60 HZ.											50 HZ.											
SPECIFICATIONS			DISPL. (CFH)	1698			2034			2412				2997	1410				1698			2010			2487	
SPECIFICATIONS			BORE X STROKE (IN)	2 x 1 1/2			2 3/16 x 1 1/2			2 3/16 x 1 19/64				2 3/16 x 2 3/16	2 x 1 1/2				2 3/16 x 1 1/2			2 3/16 x 1 19/64			2 3/16 x 2 3/16	
			COMP. MODEL	50L	75H/LF	100PCF	50PEL	75PC/ELF	150PHF	75PL	100PH/C/ELF	150PCF	200PHF	174PCF	30EL5	50C/ELF5	75CF5	100PCF5	50PL5	75PH/LF5	100PHF5	50PEL5	75PC/ELF5	150PHF5	100PH/C/ELF5	200PHF5
DESCRIPTION			PART NO.	QUANTITY PER MODEL																						
33	Bushing		BUS39	1	1	1	1	1	1	1	1	1	1	1	1	1	1	1	1	1	1	1	1	1	1	1
34	Retainer, Sight Glass		GB1091	1	1	1	1	1	1	1	1	1	1	1	1	1	1	1	1	1	1	1	1	1	1	1
35	Screw, Retainer		011P11	4	4	4	4	4	4	4	4	4	4	4	4	4	4	4	4	4	4	4	4	4	4	4
36	Sight Glass		GA1228	1	1	1	1	1	1	1	1	1	1	1	1	1	1	1	1	1	1	1	1	1	1	1
37	Gasket, Sight Glass		GA1233	1	1	1	1	1	1	1	1	1	1	1	1	1	1	1	1	1	1	1	1	1	1	1
39	Rod, Connecting	A	ROD43	6	6	6	6	6	6						6	6	6	6	6	6	6					
		B	ROD79											6											6	6
		C	GD1225							6	6	6	6									6	6	6		
40	Piston & Pin		GB1001				6	6	6	6	6	6	6	6					6	6	6	6	6	6	6	6
			GB1003	6	6	6									6	6	6	6								
41	Pin, Piston **		PIN40	6	6	6									6	6	6	6								
			PIN41				6	6	6	6	6	6	6	6					6	6	6	6	6	6	6	6
42	Retainer, Piston Pin		0580P11	12	12	12	12	12	12	12	12	12	12	12	12	12	12	12	12	12	12	12	12	12	12	12
43	Washer, Piston		GA1013	12	12	12	12	12	12	12	12	12	12	12	12	12	12	12	12	12	12	12	12	12	12	12
44	Ring, Piston		GA1014				6	6	6	6	6	6	6	6												
			GA1026	6	6	6																				
45	Cover, End	A	GD1047T3	1	1										1	1	1									
		B	GD1218T1			1	1	1	1	1	1	1	1	1				1	1	1	1	1	1	1	1	1
46	Gasket, End Cover		GA1209	1	1	1	1	1	1	1	1	1	1	1	1	1	1	1	1	1	1	1	1	1	1	1
47	Seal, Bolt		GKT342	1	1	1	1	1	1	1	1	1	1	1	1	1	1	1	1	1	1	1	1	1	1	1
48	Screw, End Cover		012P13	16	16	16	16	16	16	16	16	16	16	16	16	16	16	16	16	16	16	16	16	16	16	16
49	Identification Tag		—	1	1	1	1	1	1	1	1	1	1	1	1	1	1	1	1	1	1	1	1	1	1	1
50	Valve, Pressure Relief		GA1581			1	1	1	1	1	1	1	1	1	1	1	1	1	1	1	1	1	1	1	1	1
51	Elbow, Connecting		051P36	1	1	1	1	1	1	1	1	1	1	1	1	1	1	1	1	1	1	1	1	1	1	1
52	Slinger, Oil		GC1146T2	1	1										1	1	1									
53	Screw, Slinger		SCR30	3	3										3	3	3									
55	Pump, Oil		PMP85A			1	1	1	1	1	1	1	1	1				1	1	1	1	1	1	1	1	1
56	Gasket, Oil Pump		GKT312			1	1	1	1	1	1	1	1	1				1	1	1	1	1	1	1	1	1
57	Screw, Oil Pump		034P10			8	8	8	8	8	8	8	8	8				8	8	8	8	8	8	8	8	8
58	Crankcase **		CCS47T1												1	1										
			CCS47T2				1	1	1										1							
			CCS47T3	1	1	1											1	1			1					
			CCS47T4																	1						
			CCS75AT1											1											1	1
			GE1077							1	1	1	1									1	1	1		
59	Crankshaft		CKS34		1	1		1	1								1	1		1	1					
			CKS35	1			1								1	1			1							
			CKS53											1											1	1
			GD1227							1	1	1	1									1	1	1		
60	Key, Shaft		KIT369	1	1	1	1	1	1	1	1	1	1	1	1	1	1	1	1	1	1	1	1	1	1	1
61	Washer, Inner Thrust		GA1969	1	1	1	1	1	1	1	1	1	1	1	1	1	1	1	1	1	1	1	1	1	1	1
62	Valve, Foam Control		VAL496	1	1	1	1	1	1	1	1	1	1	1	1	1	1	1	1	1	1	1	1	1	1	1
63	Strainer, Oil Assem.		GB1381			1	1	1	1	1	1							1	1	1	1	1	1	1	1	1
64	Bearings *	A	BRG123	1	1	1	1	1	1	1	1	1	1	1	1	1	1	1	1	1	1	1	1	1	1	1
		B	GA1550	2	2	2	2	2	2	2	2	2	2	2	2	2	2	2	2	2	2	2	2	2	2	2

* Field replacement of bearings require line boring. Refer to National Service Bulletin SR116.
** Not available as separate item.

D-LINE 2 CYLINDER INTEGRAL DIRECT DRIVE COMPRESSORS
CURRENT PRODUCTION MODELS

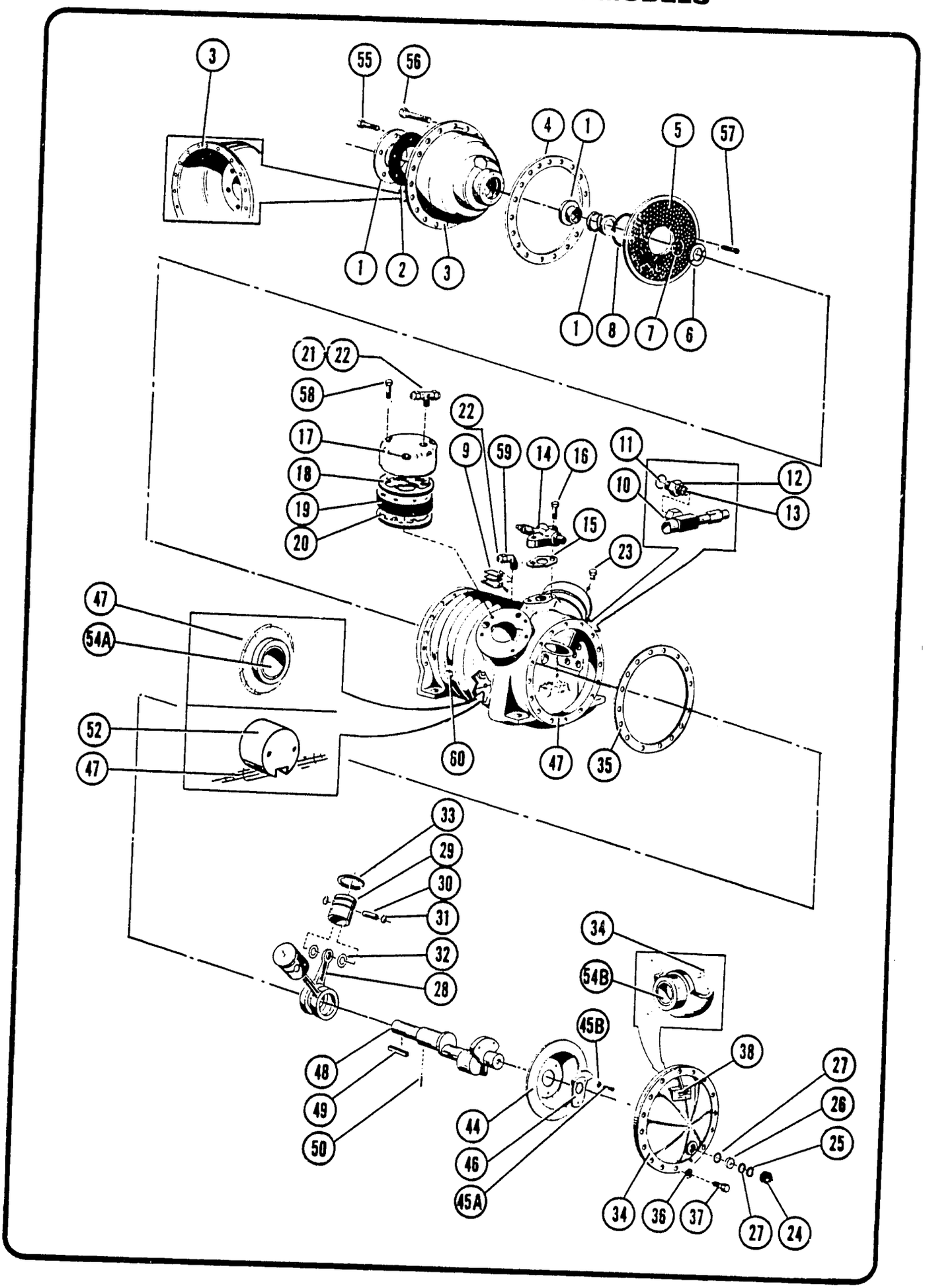

1010

D-LINE 2 CYLINDER INTEGRAL DIRECT DRIVE COMPRESSORS
CURRENT PRODUCTION MODELS

			60 HZ.										50 HZ.								
		SPECIFICATIONS: DISPL. (CFH)	348		465			566			677		290	388		472			564		
		BORE X STROKE (IN)	$1^{13}/_{16} \times 1^{1}/_{8}$		$1^{13}/_{16} \times 1^{1}/_{2}$			$2 \times 1^{1}/_{2}$			$2^{3}/_{16} \times 1^{1}/_{2}$		$1^{13}/_{16} \times 1^{1}/_{8}$	$1^{13}/_{16} \times 1^{1}/_{2}$		$2 \times 1^{1}/_{2}$			$2^{3}/_{16} \times 1^{1}/_{2}$		
		COMP. MODEL	15DH/CF/LF	20DHF	15DC/ELF	20DH/CF/LF	30DHF	15DL	20DC/ELF	30DCF	20DL	30DH/LF	15DHF5	15DH5/CF5/LF5	20DHF5	15DC5/ELF5	20DH5/CF5/LF5	30DHF5	15DL5	20DC5/ELF5	30DCF5
	DESCRIPTION	PART NO.	QUANTITY PER MODEL																		
1	Seal Assembly	GA1731	1	1	1	1	1	1	1	1	1	1	1	1	1	1	1	1	1	1	1
2	Gasket	GA1693	1	1	1	1	1	1	1	1	1	1	1	1	1	1	1	1	1	1	1
3	Seal, Housing	GD1200	1	1	1	1	1	1	1	1	1	1	1	1	1	1	1	1	1	1	1
4	Gasket, Seal Housing	GA1011	1	1	1	1	1	1	1	1	1	1	1	1	1	1	1	1	1	1	1
5	Filter, Suction	FLR31	1	1	1	1	1	1	1	1	1	1	1	1	1	1	1	1	1	1	1
6	Washer, Outer Thrust	GA1967	1	1	1	1	1	1	1	1	1	1	1	1	1	1	1	1	1	1	1
7	Retainer, Thrust Washer	0693P00	1	1	1	1	1	1	1	1	1	1	1	1	1	1	1	1	1	1	1
8	O-Ring	0458P35	1	1	1	1	1	1	1	1	1	1	1	1	1	1	1	1	1	1	1
9	Tag, I.D.		3	3	3	3	3	3	3	3	3	3	3	3	3	3	3	3	3	3	3
10	Valve, Suction Service	GA422	1	1	1	1	1	1	1	1	1	1	1	1	1	1	1	1	1	1	1
11	Gasket, Suction Valve	GA430	1	1	1	1	1	1	1	1	1	1	1	1	1	1	1	1	1	1	1
12	Adapter, Valve	GA461T2	1	1	1	1	1	1	1	1	1	1	1	1	1	1	1	1	1	1	1
13	Adaptor, O-Ring	RNG120	1	1	1	1	1	1	1	1	1	1	1	1	1	1	1	1	1	1	1
14	Valve, Discharge Service	VAL363	1	1	1	1	1	1	1	1	1	1	1	1	1	1	1	1	1	1	1
15	Gasket, Discharge Valve	GKT398	1	1	1	1	1	1	1	1	1	1	1	1	1	1	1	1	1	1	1
16	Screw, Discharge Valve	011P17	2	2	2	2	2	2	2	2	2	2	2	2	2	2	2	2	2	2	2
17	Head, Valve RH	GC1003	1	1	1	1	1	1	1	1	1	1	1	1	1	1	1	1	1	1	1
	Head, Valve LH	GC1007	1	1	1	1	1	1	1	1	1	1	1	1	1	1	1	1	1	1	1
18	Gasket, Head	GKT343	2	2	2	2	2	2	2	2	2	2	2	2	2	2	2	2	2	2	2
19	Valve Plate Assembly	GB1042	2	2	2	2	2	2	2	2	2	2	2	2	2	2	2	2	2	2	2
20	Gasket, Valve Plate	GKT370	2	2	2	2	2						2	2	2						
		GKT371						2	2	2						2	2	2			
		GKT372									2	2							2	2	2
21	Tee	GA1612	1	1	1	1	1	1	1	1	1	1	1	1	1	1	1	1	1	1	1
22	Cap	0212P02	2	2	2	2	2	2	2	2	2	2	2	2	2	2	2	2	2	2	2
23	Plug	055P61	1	1	1	1	1	1	1	1	1	1	1	1	1	1	1	1	1	1	1
24	Retainer, Sight Glass	GA211	1	1	1	1	1	1	1	1	1	1	1	1	1	1	1	1	1	1	1
25	Ring, Friction	GA212	1	1	1	1	1	1	1	1	1	1	1	1	1	1	1	1	1	1	1
26	Sight Glass	GA210	1	1	1	1	1	1	1	1	1	1	1	1	1	1	1	1	1	1	1
27	Gasket, Sight Glass	GA213	2	2	2	2	2	2	2	2	2	2	2	2	2	2	2	2	2	2	2
28	Rod, Connecting	GA1000	2	2	2	2	2	2	2	2	2	2	2	2	2	2	2	2	2	2	2
29	Piston & Pin	GB1001	2	2	2	2	2						2	2	2						
		GB1002						2	2	2						2	2	2			
		GB1003									2	2							2	2	2

D-LINE 2 CYLINDER INTEGRAL DIRECT DRIVE COMPRESSORS
CURRENT PRODUCTION MODELS CONTINUED

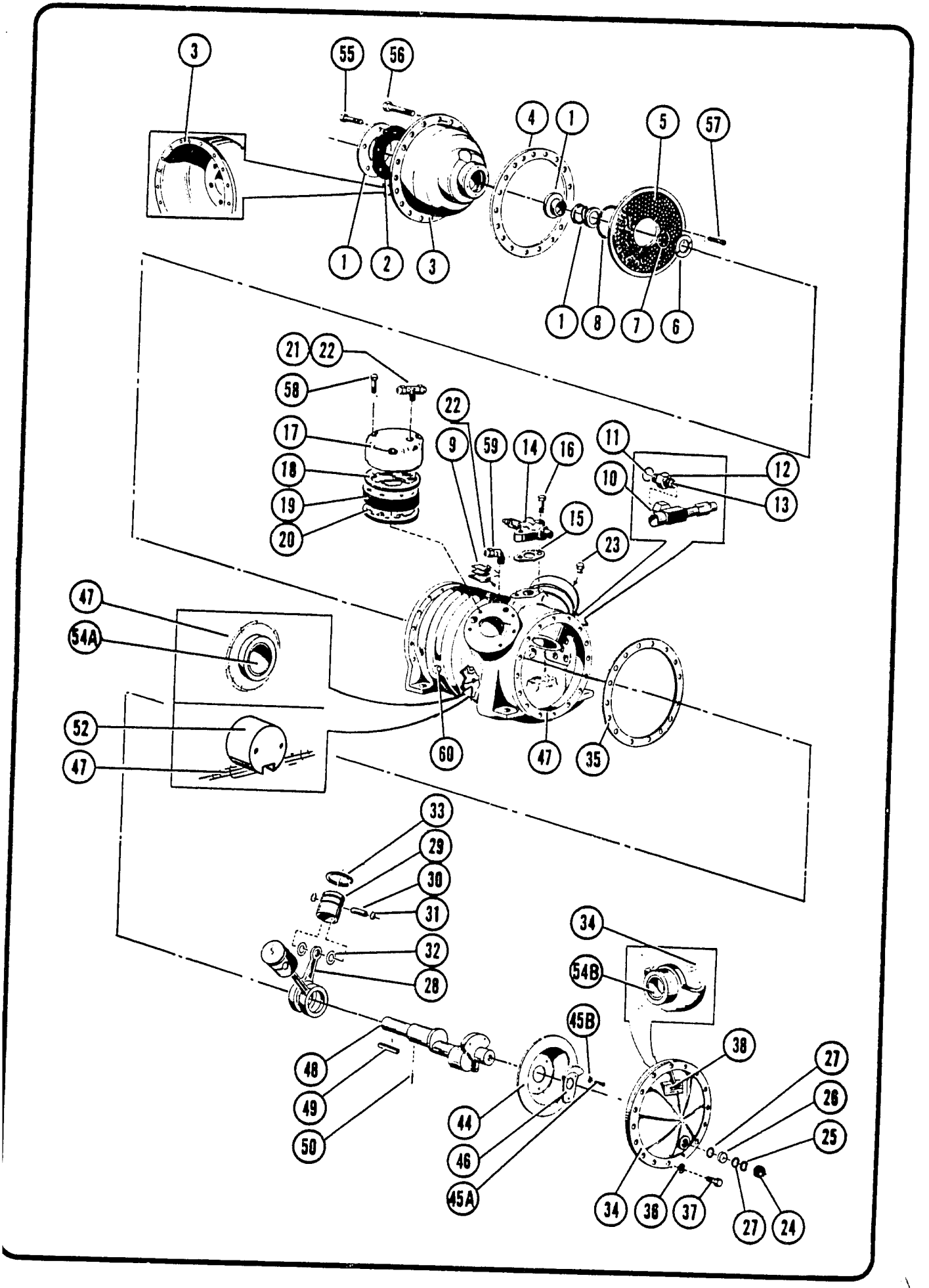

D-LINE 2 CYLINDER INTEGRAL DIRECT DRIVE COMPRESSORS
CURRENT PRODUCTION MODELS CONTINUED

				60 HZ.										50 HZ.								
			SPECIFICATIONS: DISPL. (CFH)	348		465			566			677		290	388		472			564		
			SPECIFICATIONS: BORE X STROKE (IN)	$1\frac{13}{16} \times 1\frac{1}{8}$		$1\frac{13}{16} \times 1\frac{1}{2}$			$2 \times 1\frac{1}{2}$			$2\frac{3}{16} \times 1\frac{1}{2}$		$1\frac{13}{16} \times 1\frac{1}{8}$	$1\frac{13}{16} \times 1\frac{1}{2}$		$2 \times 1\frac{1}{2}$			$2\frac{3}{16} \times 1\frac{1}{2}$		
			SPECIFICATIONS: COMP. MODEL	15DH/CF/LF	20DHF	15DC/ELF	20DH/CF/LF	30DHF	15DL	20DC/ELF	30DCF	20DL	30DH/LF	15DHF5	15DH5/CF5/LF5	20DHF5	15DC5/ELF5	20DH5/CF5/LF5	30DHF5	15DL5	20DC5/ELF5	30DCF5
DESCRIPTION			PART NO.	QUANTITY PER MODEL																		
30	Pin Piston*		PIN39	2	2	2	2	2						2	2	2						
			PIN40						2	2	2						2	2	2			
			PIN41									2	2							2	2	2
31	Retainer, Piston Pin		0580P11	4	4	4	4	4	4	4	4	4	4	4	4	4	4	4	4	4	4	4
32	Washer, Piston		GA1013	4	4	4	4	4	4	4	4	4	4	4	4	4	4	4	4	4	4	4
33	Ring, Piston		GA1014									2	2							2	2	2
			GA1026						2	2	2						2	2	2			
			GA1027	2	2	2	2	2						2	2	2						
34	Cover,		GD1001	1	1	1	1	1	1	1	1	1	1	1	1	1	1	1	1	1	1	1
35	Gasket, End Cover		GA1011	1	1	1	1	1	1	1	1	1	1	1	1	1	1	1	1	1	1	1
36	Seal, Screw		GKT341	1	1	1	1	1	1	1	1	1	1	1	1	1	1	1	1	1	1	1
37	Screw, End Cover		011P13	16	16	16	16	16	16	16	16	16	16	16	16	16	16	16	16	16	16	16
38	I.D. Tag		—	1	1	1	1	1	1	1	1	1	1	1	1	1	1	1	1	1	1	1
44	Slinger, Oil		GB1000	1	1	1	1	1	1	1	1	1	1	1	1	1	1	1	1	1	1	1
45	Screw, Slinger	A	SCR30	1	1	1	1	1	1	1	1	1	1	1	1	1	1	1	1	1	1	1
			SCR31	2	2	2	2	2	2	2	2	2	2	2	2	2	2	2	2	2	2	2
	Lockwasher	B	010P01	3	3	3	3	3	3	3	3	3	3	3	3	3	3	3	3	3	3	3
46	Counterweight, Slinger		GA1177	1	1																	
			GA1178			1	1	1							1	1						
			GA1179						1	1	1	1	1					1	1	1	1	1
47	Crankcase*		CCS44T1	1	1									1								
			CCS44T2		1	1	1								1	1						
			CCS44T3					1	1	1							1	1	1			
			CCS44T4								1	1								1	1	1
48	Crankshaft		GC1392			1	1	1	1	1	1	1	1		1	1	1	1	1	1	1	1
			GC1458	1	1									1								
49	Key, Shaft		KIT369	1	1	1	1	1	1	1	1	1	1	1	1	1	1	1	1	1	1	1
50	Pin, Spring		PIN80T3	1	1	1	1	1	1	1	1	1	1	1	1	1	1	1	1	1	1	1
52	Valve, Foam Control		VAL496	1	1	1	1	1	1	1	1	1	1	1	1	1	1	1	1	1	1	1
54	Bearing**	A	GA1037	1	1	1	1	1	1	1	1	1	1	1	1	1	1	1	1	1	1	1
		B	GA1038	1	1	1	1	1	1	1	1	1	1	1	1	1	1	1	1	1	1	1
55	Bolt, Seal Plate		034P09	6	6	6	6	6	6	6	6	6	6	6	6	6	6	6	6	6	6	6
56	Bolt, Seal Housing		012P13	16	16	16	16	16	16	16	16	16	16	16	16	16	16	16	16	16	16	16
57	Screw, Filter		0533P09	4	4	4	4	4	4	4	4	4	4	4	4	4	4	4	4	4	4	4
58	Screw, Head		011P17	12	12	12	12	12	12	12	12	12	12	12	12	12	12	12	12	12	12	12
59	Elbow, Crankcase		072P01	1	1	1	1	1	1	1	1	1	1	1	1	1	1	1	1	1	1	1
60	Plug, Crankcase		055P62	1	1	1	1	1	1	1	1	1	1	1	1	1	1	1	1	1	1	1

*Not available as separate item.

**Field replacement of bearings require line boring. Refer to National Service Bulletin SR116.

D-LINE 3 CYLINDER DIRECT DRIVE COMPRESSORS
CURRENT PRODUCTION MODELS

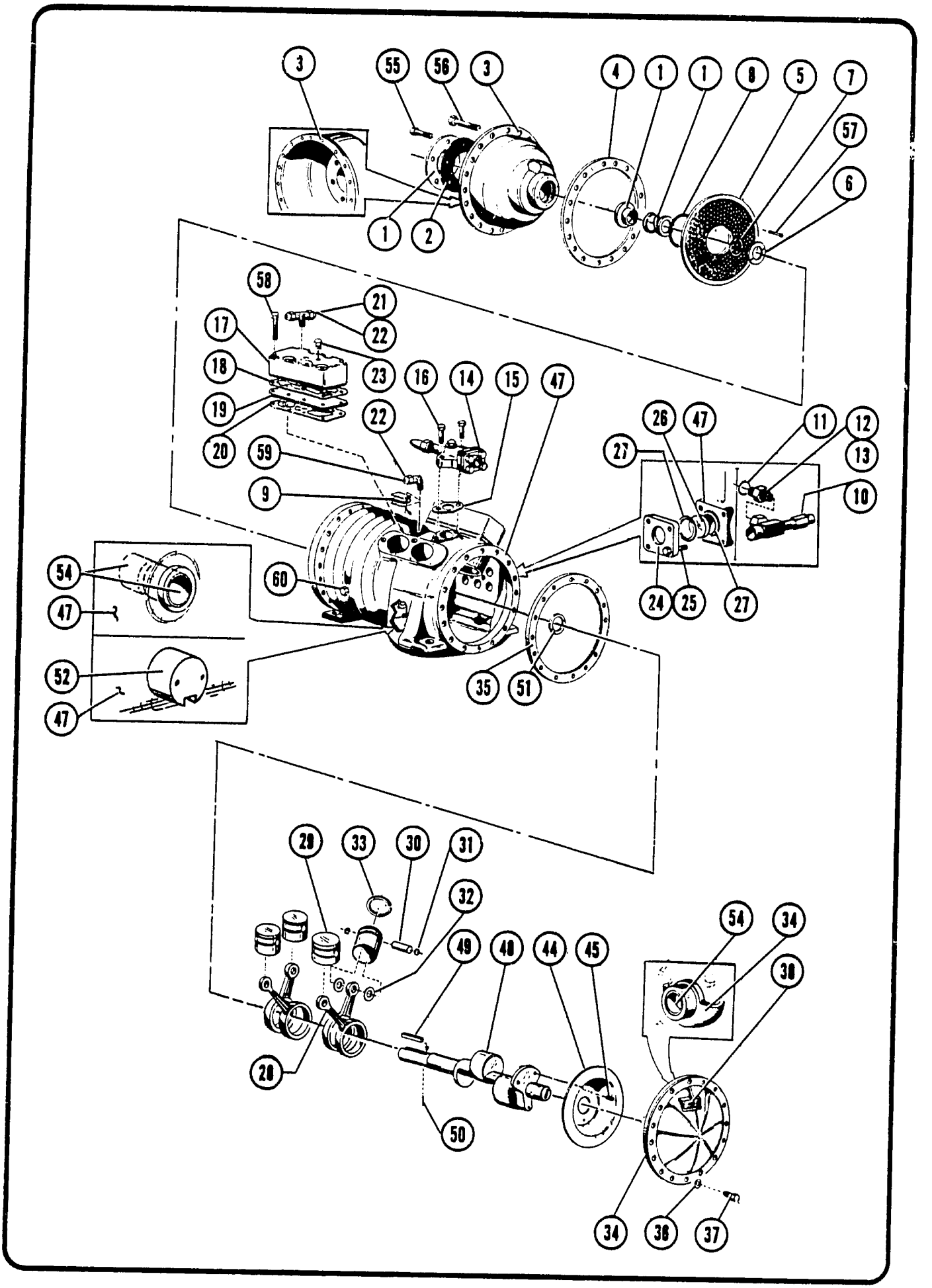

1074

D-LINE 3 CYLINDER DIRECT DRIVE COMPRESSORS
CURRENT PRODUCTION MODELS

			60 HZ.	50 HZ.		
		SPECIFICATIONS: DISPL. (CFH)	846	705		846
		SPECIFICATIONS: BORE X STROKE (IN)	2 x 1 1/2	2 x 1 1/2		2 3/16 x 1 1/2
		SPECIFICATIONS: COMP MODEL	52DHF	20DL5 †	30DH5/LF5†	52DHF5
	DESCRIPTION	PART NO.	QUANTITY			
1	Seal Assembly	GB1203	1	1	1	1
2	Gasket	GA1478	1	1	1	1
3	Seal, Housing	GD1200	1	1	1	1
4	Gasket, Seal Housing	GA1209	2	2	2	2
5	Filter, Suction	FLR32	1	1	1	1
6	Washer, Outer Thrust	GA1968	1	1	1	1
7	Retainer, Thrust Washer	0693PO1	1	1	1	1
8	O Ring	RNG292	1	1	1	1
9	Tag I.D.	—	3	3	3	3
10	Valve, Suction Service	GA424	1			1
		GA422		1	1	
11	Gasket, Suction Valve	GA431	1	1	1	1
12	Adapter, Valve	GA461T1	1			1
		GA461T3		1	1	
13	Adaptor, O-Ring	RNG112	1	1	1	1
14	Valve, Discharge Service	VAL363		1	1	
		VAL615	1			1
15	Gasket, Discharge Valve	GKT398	1	1	1	1
16	Screw, Discharge Valve	011P17	2	2	2	2
17	Head, Valve RH	GD1191	1	1	1	1
	Head, Valve LH	GD1192	1	1	1	1
18	Gasket Head	GB1089	2	2	2	2
19	Valve Plate Assembly	GC1162	2	2	2	2
20	Gasket, Valve Plate	GKT374	2	2	2	
		GKT375				2
21	Tee	GA1612	1	1	1	1
22	Cap	0212P02	2	2	2	2
23	Plug	055P61	1	1	1	1
24	Retainer, Sight Glass	GB1091	1	1	1	1
25	Screw, Retainer	011P11	4	4	4	4
26	Sight Glass	GA1228	1	1	1	1
27	Gasket, Sight Glass	GA1233	2	2	2	2

			60 HZ.	50 HZ.		
		SPECIFICATIONS: DISPL. (CFH)	846	705		846
		SPECIFICATIONS: BORE X STROKE (IN)	2 x 1 1/2	2 x 1 1/2		2 3/16 x 1 1/2
		SPECIFICATIONS: COMP MODEL	52DHF	20DL5 †	30DH5/LF5†	52DHF5
	DESCRIPTION	PART NO.	QUANTITY			
28	Rod Connecting	GC1156	4	4	4	4
29	Piston & Pin	GB1001				3
		GB1003	3	3	3	
		GB1368	1	1	1	
		GB1369				1
30	Pin, Piston*	PIN40	4	4	4	
		PIN41				4
31	Retainer, Pin	0580P11	8	8	8	8
32	Washer, Piston	GA1013	8	8	8	8
33	Ring, Piston	GA1026	4	4	4	
		GA1027				4
34	Cover	GD1047T1	1	1	1	1
35	Gasket, End Cover	GA1209	1	1	1	1
36	Seal, Screw	GKT342	1	1	1	1
37	Screw, End Cover	012P13	16	16	16	16
38	I.D. Tag	—	1	1	1	1
44	Slinger, Oil	GC1146T1	1	1	1	1
45	Screw, Slinger	SCR30	3	3	3	3
47	Crankcase*	CCS46T2	1	1	1	
		CCS46T3				1
48	Crankshaft	GD1117	1	1	1	
49	Key, Shaft	KIT369	1	1	1	1
50	Pin, Spring	PIN80T3	1	1	1	1
51	Washer, Inner Thrust	GA1966	1	1	1	1
52	Valve, Foam Control	VAL496	1	1	1	1
54	Bearing**	GA1554	3	3	3	3
55	Bolt, Seal Plate	012P11	6	6	6	6
56	Bolt, Seal Housing	012P13	16	16	16	16
57	Screw, Filter	0533P09	4	4	4	4
58	Screw, Head	012P27	18	18	18	18
59	Elbow, Crankcase	072P01	1	1	1	1
60	Plug, Crankcase	055P02	1	1	1	1

†Deleted from current production. See page 6 for comparable replacement compressor.
**Field replacement of bearings require line boring. Refer to National Service Bulletin SR116.
*Not available as separate item.

1075

D-LINE 4 CYLINDER DIRECT DRIVE COMPRESSORS
CURRENT PRODUCTION MODELS

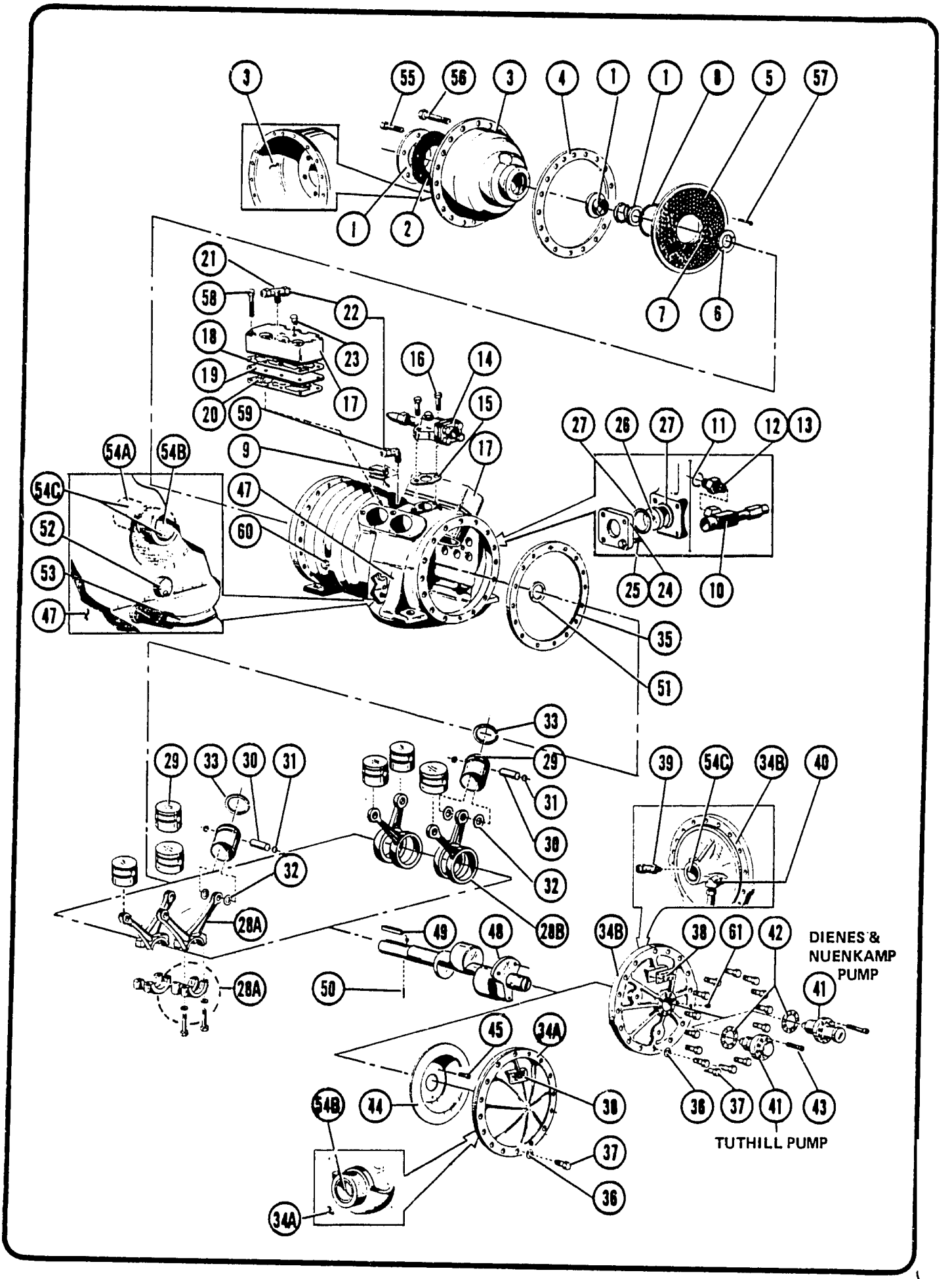

1071

D-LINE 4 CYLINDER DIRECT DRIVE COMPRESSORS
CURRENT PRODUCTION MODELS

SPECIFICATIONS			60 HZ.																	50 HZ.												
		DISPL. (CFH)	930		1128			1356				1680				2000			940		1128			1400				1667			
		BORE X STROKE (IN)	$1^{13}/_{16} \times 1^{1}/_{2}$		$2 \times 1^{1}/_{2}$			$2^{3}/_{16} \times 1^{1}/_{2}$				$2 \times 2^{3}/_{16}$				$2^{3}/_{16} \times 2^{3}/_{16}$			$2 \times 1^{1}/_{2}$		$2^{3}/_{16} \times 1^{1}/_{2}$			$2 \times 2^{3}/_{16}$				$2^{3}/_{16} \times 2^{3}/_{16}$			
		COMP. MODEL	30DC/ELF	50DCF	30DL	50DH/LF	75DHF	30DEL †	50DC/ELF	75DCF	100DPHF	51DPL	76DPH/C/ELF †	101DPCF †	111DPHF/CF	51DPEL †	77DPH/C/ELF	151DPHF/CF	30DC5/ELF5	50DCF5	30DL5	50DHF/LF5	75DHF5	31DPEL5 †	51DPH5/C5/ELF5†	76DPCF5 †	101DPHF5/CF5	51DPL5 †	76DPH5/C5/ELF5†	101DPCF5	111DPHF5/CF5
	DESCRIPTION	PART NO.	QUANTITY PER MODEL																													
1	Seal Assembly	GB1203	1	1	1	1	1	1	1	1	1	1	1	1	1	1	1	1	1	1	1	1	1	1	1	1	1	1	1	1	1
2	Gasket	GA1478	1	1	1	1	1	1	1	1	1	1	1	1	1	1	1	1	1	1	1	1	1	1	1	1	1	1	1	1	1
3	Seal, Housing	GD1200	1	1	1	1	1	1	1	1	1	1	1	1	1	1	1	1	1	1	1	1	1	1	1	1	1	1	1	1	1
4	Gasket, Seal Housing	GA1209	2	2	2	2	2	2	2	2	2	2	2	2	2	2	2	2	2	2	2	2	2	2	2	2	2	2	2	2	2
5	Filter, Suction	FLR32	1	1	1	1	1	1	1	1	1	1	1	1	1	1	1	1	1	1	1	1	1	1	1	1	1	1	1	1	1
6	Washer, Outer Thrust	GA1968	1	1	1	1	1	1	1	1	1	1	1	1	1	1	1	1	1	1	1	1	1	1	1	1	1	1	1	1	1
7	Retainer, Thrust Washer	0693P01	1	1	1	1	1	1	1	1	1	1	1	1	1	1	1	1	1	1	1	1	1	1	1	1	1	1	1	1	1
8	O Ring	RNG292	1	1	1	1	1	1	1	1	1	1	1	1	1	1	1	1	1	1	1	1	1	1	1	1	1	1	1	1	1
9	I. D. Tags	—	3	3	3	3	3	3	3	3	3	3	3	3	3	3	3	3	3	3	3	3	3	3	3	3	3	3	3	3	3
10	Valve, Suction Service	GA424	1	1	1	1	1	1	1	1	1	1	1	1	1	1	1	1	1	1	1	1	1	1	1	1	1	1	1	1	1
11	Gasket, Suction Valve	GA431	1	1	1	1	1	1	1	1	1	1	1	1	1	1	1	1	1	1	1	1	1	1	1	1	1	1	1	1	1
12	Adapter, Valve	GA461T1	1	1	1	1	1	1	1	1	1	1	1	1	1	1	1	1	1	1	1	1	1	1	1	1	1	1	1	1	1
13	Adaptor, O-Ring	RNG112	1	1	1	1	1	1	1	1	1	1	1	1	1	1	1	1	1	1	1	1	1	1	1	1	1	1	1	1	1
14	Valve, Discharge Service	VAL363	1		1																										
		VAL372																							1	1	1	1	1	1	1
		VAL373												1	1	1	1	1	1					1							
		VAL615		1		1	1	1	1	1	1	1	1							1	1	1	1								
15	Gasket, Discharge Valve	GKT340										1	1	1	1	1	1	1						1	1	1	1	1	1	1	1
		GKT398	1	1	1	1	1	1	1	1	1								1	1	1	1	1								
16	Screw, Discharge Valve	011P17										2	2	2	2	2	2	2						2	2	2	2	2	2	2	2
		014P17	2	2	2	2	2	2	2	2	2								2	2	2	2	2								
17	Head, Valve RH	GD1191	1	1	1	1	1	1	1	1	1	1	1	1	1	1	1	1	1	1	1	1	1	1	1	1	1	1	1	1	1
	Head, Valve LH	GD1192	1	1	1	1	1	1	1	1	1	1	1	1	1	1	1	1	1	1	1	1	1	1	1	1	1	1	1	1	1
18	Gasket, Head	GB1089	2	2	2	2	2	2	2	2	2	2	2	2	2	2	2	2	2	2	2	2	2	2	2	2	2	2	2	2	2
19	Valve Plate Assembly	GC1162		2	2	2	2	2	2	2	2	2	2	2	2	2	2	2	2	2	2	2	2	2	2	2	2	2	2	2	2
20	Gasket, Valve Plate	GKT373	2	2																											
		GKT374			2	2	2					2	2	2	2				2	2				2	2	2	2				
		GKT375						2	2	2	2					2	2	2			2	2	2					2	2	2	2
21	Tee	GA1612	1	1	1	1	1	1	1	1	1	1	1	1	1	1	1	1	1	1	1	1	1	1	1	1	1	1	1	1	1
22	Cap	0212P02	3	3	3	3	3	3	3	3	3	3	3	3	3	3	3	3	3	3	3	3	3	3	3	3	3	3	3	3	3
23	Plug	055P61	2	2	2	2	2	2	2	2	2	2	2	2	2	2	2	2	2	2	2	2	2	2	2	2	2	2	2	2	2
24	Retainer, Sight Glass	GB1091	1	1	1	1	1	1	1	1	1	1	1	1	1	1	1	1	1	1	1	1	1	1	1	1	1	1	1	1	1
25	Screw, Retainer	011P11	4	4	4	4	4	4	4	4	4	4	4	4	4	4	4	4	4	4	4	4	4	4	4	4	4	4	4	4	4
26	Sight Glass	GA1228	1	1	1	1	1	1	1	1	1	1	1	1	1	1	1	1	1	1	1	1	1	1	1	1	1	1	1	1	1
27	Gasket, Sight Glass	GA1233	2	2	2	2	2	2	2	2	2	2	2	2	2	2	2	2	2	2	2	2	2	2	2	2	2	2	2	2	2
28	Rod, Connecting A	ROD79										4	4	4	4	4	4	4						4	4	4	4	4	4	4	4
	Rod, Connecting B	GC1150	4	4	4	4	4	4	4	4	4								4	4	4	4	4								
29	Piston	GB1001						4	4	4	4					4	4	4			4	4	4					4	4	4	4
		GB1002	4	4																											
		GB1003			4	4	4					4	4	4	4				4	4				4	4	4	4				

†Deleted from current production. See page 6 for comparable replacement compressor.
**Field replacement of bearings require line boring. Refer to National Service Bulletin SR116.
*Not available as separate item.

1077

D-LINE 4 CYLINDER DIRECT DRIVE COMPRESSORS
CURRENT PRODUCTION MODELS CONTINUED

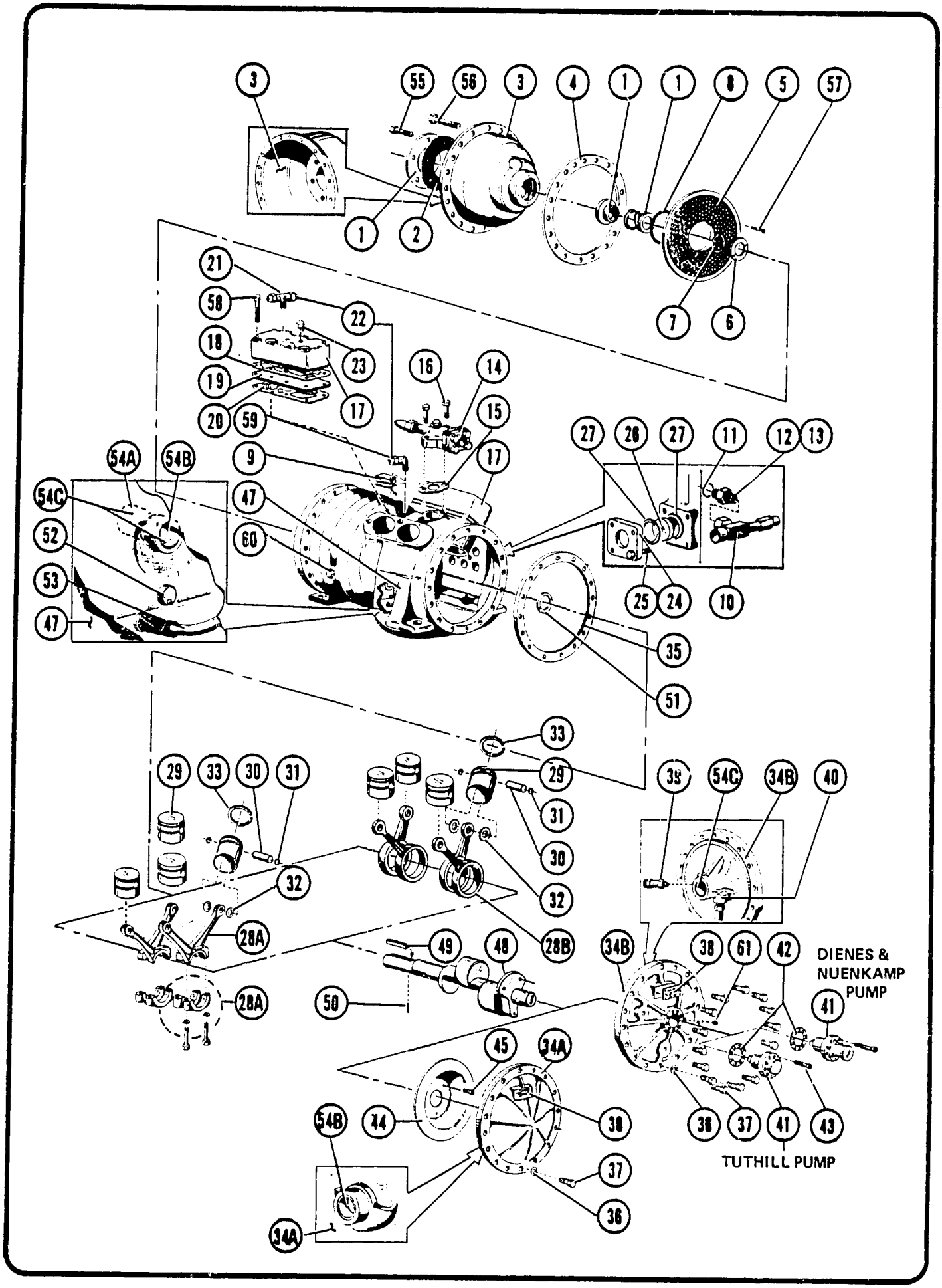

1078

D-LINE 4 CYLINDER DIRECT DRIVE COMPRESSORS
CURRENT PRODUCTION MODELS CONTINUED

			60 HZ.																	50 HZ.											
SPECIFICATIONS		DISPL. (CFH)	930		1128			1356				1680				2000				940		1128			1400				1667			
		BORE X STROKE (IN)	$1^{13}/_{16} \times 1^{1}/_{2}$		$2 \times 1^{1}/_{2}$			$2^{3}/_{16} \times 1^{1}/_{2}$				$2 \times 2^{3}/_{16}$				$2^{3}/_{16} \times 2^{3}/_{16}$				$2 \times 1^{1}/_{2}$		$2^{3}/_{16} \times 1^{1}/_{2}$			$2 \times 2^{3}/_{16}$				$2^{3}/_{16} \times 2^{3}/_{16}$			
		COMP. MODEL	30DC/ELF	50DCF	30DL	50DH/LF	75DHF	30DEL †	50DC/ELF	75DCF	100DPHF	51DPL	76DPH/C/ELF †	101DPCF †	111DPHF/CF	51DPEL †	77DPH/C/ELF	151DPHF/CF	30DC5/ELF5	50DCF5	30DL5	50DHF/LF5	75DHF5	31DPEL5 †	51DPH5/C5/ELF5†	76DPCF5 †	101DPHF5/CF5	51DPL5 †	76DPH5/C5/ELF5†	101DPCF5	111DPHF5/CF5
DESCRIPTION		PART NO.	QUANTITY PER MODEL																												
30	Piston, Pin*	PIN39	4	4																											
		PIN40			4	4	4					4	4	4	4				4	4				4	4	4	4				
		PIN41						4	4	4	4					4	4	4			4	4	4					4	4	4	4
31	Retainer, Piston Pin	0580P11	8	8	8	8	8	8	8	8	8	8	8	8	8	8	8	8	8	8	8	8	8	8	8	8	8	8	8	8	8
32	Washer, Piston	GA1013	8	8	8	8	8	8	8	8	8	8	8	8	8	8	8	8	8	8	8	8	8	8	8	8	8	8	8	8	8
33	Ring, Piston	GA1014						4	4	4	4					4	4	4			4	4	4					4	4	4	4
		GA1026			4	4	4					4	4	4	4				4	4				4	4	4	4				
		GA1027	4	4																											
34	Cover, End A	GD1047T1	1	1	1	1	1	1	1	1									1	1	1	1	1								
	Cover, End B	GD1218T1										1	1	1	1	1	1	1						1	1	1	1	1	1	1	1
		GD1218T2									1																				
35	Gasket, End Cover	GA1209	1	1	1	1	1	1	1	1	1	1	1	1	1	1	1	1	1	1	1	1	1	1	1	1	1	1	1	1	1
36	Seal, Screw	GKT342	1	1	1	1	1	1	1	1	1	1	1	1	1	1	1	1	1	1	1	1	1	1	1	1	1	1	1	1	1
37	Screw, End Cover	012P13	16	16	16	16	16	16	16	16	16	16	16	16	16	16	16	16	16	16	16	16	16	16	16	16	16	16	16	16	16
38	I.D. Tag	—	1	1	1	1	1	1	1	1	1	1	1	1	1	1	1	1	1	1	1	1	1	1	1	1	1	1	1	1	1
39	Valve, Pressure Relief	GA1581									1	1	1	1	1	1	1	1					1	1	1	1	1	1	1	1	1
40	Elbow, Connecting	051P36									1	1	1	1	1	1	1	1					1	1	1	1	1	1	1	1	1
		051P52	1	1	1	1	1	1	1	1									1	1	1	1	1								
41	Pump, Oil	PMP85A									1	1	1	1	1	1	1	1						1	1	1	1	1	1	1	1
42	Gasket, Oil Pump	GKT312									1	1	1	1	1	1	1	1						1	1	1	1	1	1	1	1
43	Screw, Oil Pump	034P10									8	8	8	8	8	8	8	8						8	8	8	8	8	8	8	
44	Slinger, Oil	GC1146T1	1	1	1	1	1	1	1	1									1	1	1	1	1								
45	Screw, Slinger	SCR30	3	3	3	3	3	3	3	3									3	3	3	3	3								
47	Crankcase*	CCS46T1	1	1																											
		CCS46T2			1	1	1												1	1											
		CCS46T3						1	1	1	1										1	1	1								
		CCS46T4										1	1	1	1									1	1	1					
		CCS46T5														1	1	1									1	1	1	1	1
48	Crankshaft	CKS56T2										1	1	1	1	1	1	1						1	1	1	1	1	1	1	1
		GD1151	1	1	1	1	1	1	1	1	1								1	1	1	1	1								
49	Key, Shaft	KIT369	1	1	1	1	1	1	1	1	1	1	1	1	1	1	1	1	1	1	1	1	1	1	1	1	1	1	1	1	1
50	Pin, Spring	PIN80T3	1	1	1	1	1	1	1	1	1	1	1	1	1	1	1	1	1	1	1	1	1	1	1	1	1	1	1	1	1
51	Washer, Inner Thrust	GA1966	1	1	1	1	1	1	1	1	1								1	1	1	1	1								
		GA1969										1	1	1	1	1	1	1						1	1	1	1	1	1	1	1
52	Valve, Foam Control	VAL496	1	1	1	1	1	1	1	1	1	1	1	1	1	1	1	1	1	1	1	1	1	1	1	1	1	1	1	1	1
53	Strainer, Oil Assem.	GB1381									1	1	1	1	1	1	1	1						1	1	1	1	1	1	1	1
54	Bearing** A	BRG123										1	1	1	1	1	1	1						1	1	1	1	1	1	1	1
	Bearing** B	GA1550										2	2	2	2	2	2	2						2	2	2	2	2	2	2	2
	Bearing** C	GA1554	3	3	3	3	3	3	3	3	3								3	3	3	3	3								
55	Bolt, Seal Plate	012P11	6	6	6	6	6	6	6	6	6	6	6	6	6	6	6	6	6	6	6	6	6	6	6	6	6	6	6	6	6
56	Bolt, Seal Housing	012P13	16	16	16	16	16	16	16	16	16	16	16	16	16	16	16	16	16	16	16	16	16	16	16	16	16	16	16	16	16
57	Screw, Filter	0533P09	4	4	4	4	4	4	4	4	4	4	4	4	4	4	4	4	4	4	4	4	4	4	4	4	4	4	4	4	4
58	Screw, Head	012P27	18	18	18	18	18	18	18	18	18	18	18	18	18	18	18	18	18	18	18	18	18	18	18	18	18	18	18	18	18
59	Elbow, Crankcase	072P01	1	1	1	1	1	1	1	1	1	1	1	1	1	1	1	1	1	1	1	1	1	1	1	1	1	1	1	1	1
60	Plug, Crankcase	055P62	1	1	1	1	1	1	1	1	1	1	1	1	1	1	1	1	1	1	1	1	1	1	1	1	1	1	1	1	1
61	Plug, End Cover	055P71	2	2	2	2	2	2	2	2	2	2	2	2	2	2	2	2	2	2	2	2	2	2	2	2	2	2	2	2	2

†Deleted from current production. See page 6 for comparable replacement compressor.
**Field replacement of bearings require line boring. Refer to National Service Bulletin SR116.
*Not available as separate item.

1079

D-LINE 6 CYLINDER DIRECT DRIVE COMPRESSORS
CURRENT PRODUCTION MODELS

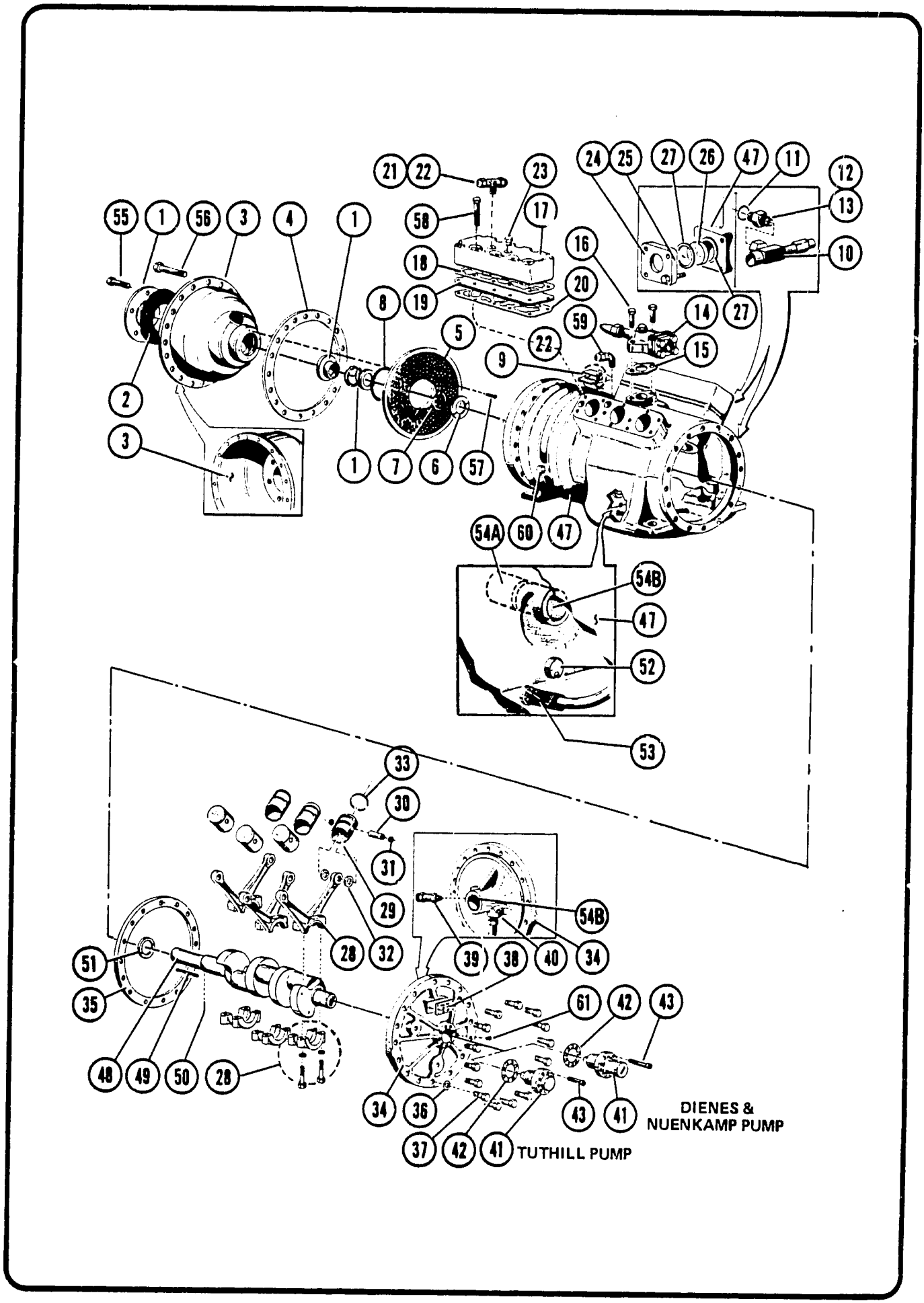

D-LINE 6 CYLINDER DIRECT DRIVE COMPRESSORS
CURRENT PRODUCTION MODELS

			60 HZ.							50 HZ.					
		SPECIFICATIONS: DISPL. (CFH)	2500				2997			2083			2500		
		SPECIFICATIONS: BORE X STROKE (IN)	2 x 2 3/16				2 3/16 x 2 3/16			2 x 2 3/16			2 3/16 x 2 3/16		
		SPECIFICATIONS: COMP. MODEL	201DPHF/CF	151DPCF	101DPH/C/ELF	76DPL	204DPHF/CF	154DPH/C/ELF	101DPL †	151DPHF5/CF5	77DPH5/C5/ELF5	51DPEL5 †	201DPHF5/CF5	101DPH5/C5/ELF5	76DPL5 †
	DESCRIPTION	PART NO.	QUANTITY PER MODEL												
1	Seal Assembly	GB1203	1	1	1	1	1	1	1	1	1	1	1	1	1
2	Gasket	GA1478	1	1	1	1	1	1	1	1	1	1	1	1	1
3	Seal, Housing	GD1200	1	1	1	1	1	1	1	1	1	1	1	1	1
4	Gasket, Seal Housing	GA1209	2	2	2	2	2	2	2	2	2	2	2	2	2
5	Filter, Suction	FLR32	1	1	1	1	1	1	1	1	1	1	1	1	1
6	Washer, Outer Thrust	GA1968	1	1	1	1	1	1	1	1	1	1	1	1	1
7	Retainer, Thrust Washer	0693P01	1	1	1	1	1	1	1	1	1	1	1	1	1
8	O Ring	RNG292	1	1	1	1	1	1	1	1	1	1	1	1	1
9	Tag, I.D.		1	1	1	1	1	1	1	1	1	1	1	1	1
10	Valve, Suction Service	GA424	1	1	1	1	1	1	1	1	1	1	1	1	1
11	Gasket, Suction Valve	GA431	1	1	1	1	1	1	1	1	1	1	1	1	1
12	Adapter, Valve	GA461T1	1	1	1	1	1	1	1	1	1	1	1	1	1
13	Adaptor, O-Ring	RNG112	1	1	1	1	1	1	1	1	1	1	1	1	1
14	Valve, Discharge Service	VAL373	1	1	1	1	1	1	1	1	1	1	1	1	1
15	Gasket, Discharge Valve	GKT340	1	1	1	1	1	1	1	1	1	1	1	1	1
16	Screw, Discharge Valve	014P17	2	2	2	2	2	2	2	2	2	2	2	2	2
17	Head, Valve RH	GD1189	1	1	1	1	1	1	1	1	1	1	1	1	1
	Head, Valve LH	GD1190	1	1	1	1	1	1	1	1	1	1	1	1	1
18	Gasket, Head	GC1150	(2) ALL MODELS SEE PAGE 45 & 46												
19	Valve Plate Assembly	PLT2001A													
20	Gasket, Valve Plate	GKT376	2	2	2	2				2	2	2			
		GKT377					2	2	2				2	2	2
21	Tee	GA1612	1	1	1	1	1	1	1	1	1	1	1	1	1
22	Cap	0212P02	2	2	2	2	2	2	2	2	2	2	2	2	2
23	Plug	055P61	1	1	1	1	1	1	1	1	1	1	1	1	1
24	Retainer, Sight Glass	GB1091	1	1	1	1	1	1	1	1	1	1	1	1	1
25	Screw, Retainer	011P11	4	4	4	4	4	4	4	4	4	4	4	4	4

†Deleted from current production. See page 6 for comparable replacement compressor.

D-LINE 6 CYLINDER DIRECT DRIVE COMPRESSORS
CURRENT PRODUCTION MODELS CONTINUED

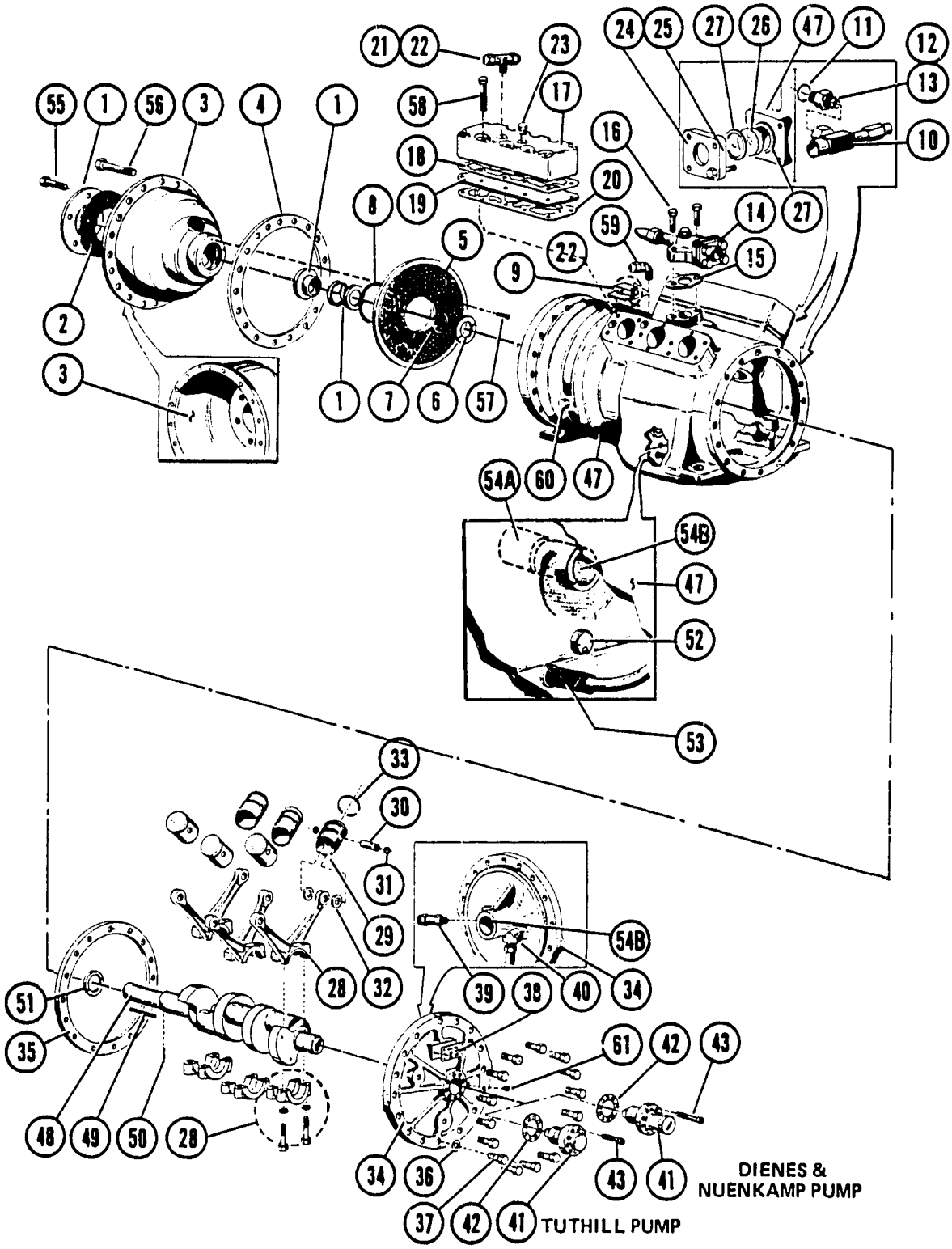

1082

D-LINE 6 CYLINDER DIRECT DRIVE COMPRESSORS
CURRENT PRODUCTION MODELS CONTINUED

			60 HZ.							50 HZ.					
SPECIFICATIONS		DISPL. (CFH)	2500				2997			2083			2500		
		BORE X STROKE (IN)	2 x 2 3/16				2 3/16 x 2 3/16			2 x 2 3/16			2 3/16 x 2 3/16		
		COMP. MODEL	201DPHF/CF	151DPCF	101DPH/C/ELF	76DPL	204DPHF/CF	154DPH/C/ELF	101DPL †	151DPHF5/CF5	77DPH5/C5/ELF5	51DPEL5 †	201DPHF5/CF5	101DPH5/C5/ELF5	76DPL5 †
	DESCRIPTION	PART NO.	QUANTITY PER MODEL												
26	Sight Glass	GA1228	1	1	1	1	1	1	1	1	1	1	1	1	1
27	Gasket, Sight Glass	GA1233	2	2	2	2	2	2	2	2	2	2	2	2	2
28	Rod, Connecting	ROD79	6	6	6	6	6	6	6	6	6	6	6	6	6
29	Piston	GB1001				6	6	6	6				6	6	6
		GB1003	6	6	6					6	6	6			
30	Piston, Pin *	PIN40	6	6	6					6	6	6			
		PIN41				6	6	6	6				6	6	6
31	Retainer, Piston Pin	0580P11	12	12	12	12	12	12	12	12	12	12	12	12	12
32	Washer, Piston	GA1013	12	12	12	12	12	12	12	12	12	12	12	12	12
33	Ring, Piston	GA1014				6	6	6	6				6	6	6
		GA1026	6	6	6					6	6	6			
34	Cover, Pump End	GD1218T1	1	1	1	1	1	1	1	1	1	1	1	1	1
35	Gasket, End Cover	GA1209	1	1	1	1	1	1	1	1	1	1	1	1	1
36	Seal, Screw	GKT342	1	1	1	1	1	1	1	1	1	1	1	1	1
37	Screw, End Cover	012P13	16	16	16	16	16	16	16	16	16	16	16	16	16
38	I.D. Tag	—	1	1	1	1	1	1	1	1	1	1	1	1	1
39	Valve, Pressure Relief	GA1581	1	1	1	1	1	1	1	1	1	1	1	1	1
40	Elbow, Connecting	051P36	1	1	1	1	1	1	1	1	1	1	1	1	1
41	Pump, Oil	PMP85A	1	1	1	1	1	1	1	1	1	1	1	1	1
42	Gasket, Oil Pump	GKT312	1	1	1	1	1	1	1	1	1	1	1	1	1
43	Screw, Oil Pump	034P10	8	8	8	8	8	8	8	8	8	8	8	8	8
47	Crankcase *	CCS75AT3	1	1	1					1	1	1			
		CCS75AT4				1	1	1	1				1	1	1
48	Crankshaft	CKS53T2	1	1	1	1	1	1	1	1	1	1	1	1	1
49	Key, Shaft	KIT369	1	1	1	1	1	1	1	1	1	1	1	1	1
50	Pin, Spring	PIN80T3	1	1	1	1	1	1	1	1	1	1	1	1	1
51	Washer, Inner Thrust	GA1969	1	1	1	1	1	1	1	1	1	1	1	1	1
52	Valve, Foam Control	VAL496	1	1	1	1	1	1	1	1	1	1	1	1	1
53	Strainer, Oil Assem.	GB1381	1	1	1	1	1	1	1	1	1	1	1	1	1
54	Bearing ** A	BRG123	1	1	1	1	1	1	1	1	1	1	1	1	1
	B	GA1550	2	2	2	2	2	2	2	2	2	2	2	2	2
55	Bolt, Seal Plate	012P11	6	6	6	6	6	6	6	6	6	6	6	6	6
56	Bolt, Seal Housing	012P13	16	16	16	16	16	16	16	16	16	16	16	16	16
57	Filter Screw	0533P09	4	4	4	4	4	4	4	4	4	4	4	4	4
58	Screw, Head	012P27	20	20	20	20	20	20	20	20	20	20	20	20	20
59	Elbow, Crankcase	072P01	1	1	1	1	1	1	1	1	1	1	1	1	1
60	Plug, Crankcase	055P62	1	1	1	1	1	1	1	1	1	1	1	1	1
61	Plug End Cover	055P71	2	2	2	2	2	2	2	2	2	2	2	2	2

†Deleted from current production. See page 6 for comparable replacement compressor.
**Field replacement of bearings require line boring. Refer to National Service Bulletin SR116.
*Not available as separate item.

D-LINE 6 CYLINDER DIRECT DRIVE COMPRESSORS
OUT OF PRODUCTION MODELS

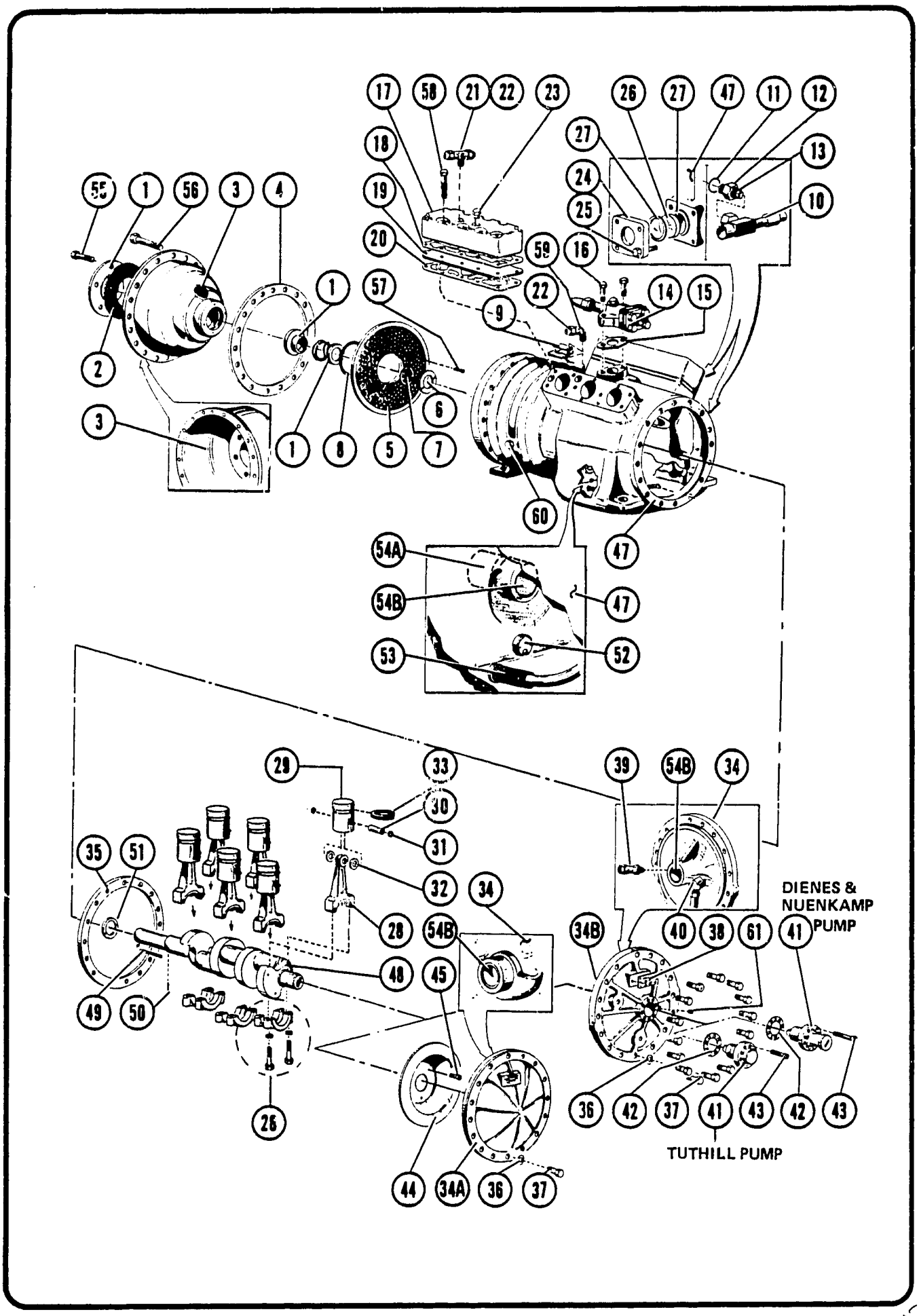

D-LINE 6 CYLINDER DIRECT DRIVE COMPRESSORS
OUT OF PRODUCTION MODELS

			60 HZ.										50 HZ.									
		SPECIFICATIONS: DISPL. (CFM)	1698			2034			2412				1410				1698			2010		
		SPECIFICATIONS: BORE X STROKE (IN)	2 x 1 1/2			2 3/16 x 1 1/2			2 3/16 x 1 49/64				2 x 1 1/2				2 3/16 x 1 1/2			2 3/16 x 1 49/64		
		SPECIFICATIONS: COMP. MODEL	50DL	75DH/LF	100DPCF	50DPEL	75DPC/ELF	150DPHF	75DPL	100DPH/ELF	150DPCF	200DPHF	30DEL5	50DC5/ELF5	75DCF5	100DPHF5	50DPL5	75DPH5/LF5	100DPCF5	50DPEL5	75DPL5/ELF5	150DPHF5
	DESCRIPTION	PART NO.	QUANTITY PER MODEL																			
1	Seal Assembly	GB1203	1	1	1	1	1	1	1	1	1	1	1	1	1	1	1	1	1	1	1	1
2	Gasket	GA1478	1	1	1	1	1	1	1	1	1	1	1	1	1	1	1	1	1	1	1	1
3	Seal, Housing	GD1200	1	1	1	1	1	1	1	1	1	1	1	1	1	1	1	1	1	1	1	1
4	Gasket, Seal Housing	GA1209	2	2	2	2	2	2	2	2	2	2	2	2	2	2	2	2	2	2	2	2
5	Filter, Suction	FLR32	1	1	1	1	1	1	1	1	1	1	1	1	1	1	1	1	1	1	1	1
6	Washer, Outer Thrust	GA1968	1	1	1	1	1	1	1	1	1	1	1	1	1	1	1	1	1	1	1	1
7	Retainer, Thrust Washer	0693P01	1	1	1	1	1	1	1	1	1	1	1	1	1	1	1	1	1	1	1	1
8	O Ring	RNG292	1	1	1	1	1	1	1	1	1	1	1	1	1	1	1	1	1	1	1	1
9	Tag, I.D.	–	1	1	1	1	1	1	1	1	1	1	1	1	1	1	1	1	1	1	1	1
10	Valve, Suction Service	GA424	1	1	1	1	1	1	1	1	1	1	1	1	1	1	1	1	1	1	1	1
11	Gasket, Suction Valve	GA431	1	1	1	1	1	1	1	1	1	1	1	1	1	1	1	1	1	1	1	1
12	Adapter, Valve	GA461T1	1	1	1	1	1	1	1	1	1	1	1	1	1	1	1	1	1	1	1	1
13	Adaptor, O-Ring	RNG112	1	1	1	1	1	1	1	1	1	1	1	1	1	1	1	1	1	1	1	1
14	Valve, Discharge Service	VAL373	1	1	1	1	1	1	1	1	1	1	1	1	1	1	1	1	1	1	1	1
15	Gasket, Discharge Valve	GKT340	1	1	1	1	1	1	1	1	1	1	1	1	1	1	1	1	1	1	1	1
16	Screw, Discharge Valve	014P17	2	2	2	2	2	2	2	2	2	2	2	2	2	2	2	2	2	2	2	2
17	Head, Valve RH	GD1189	1	1	1	1	1	1	1	1	1	1	1	1	1	1	1	1	1	1	1	1
	Head, Valve LH	GD1190	1	1	1	1	1	1	1	1	1	1	1	1	1	1	1	1	1	1	1	1
18	Gasket, Head	GC1150	2	2	2	2	2	2	2	2	2	2	2	2	2	2	2	2	2	2	2	2
19	Valve Plate Assembly	PLT2001A	2	2	2	2	2	2	2	2	2	2	2	2	2	2	2	2	2	2	2	2
20	Gasket, Valve Plate	GKT376	2	2	2								2	2	2	2						
		GKT377				2	2	2	2	2	2	2					2	2	2	2	2	2
21	Tee	GA1612	1	1	1	1	1	1	1	1	1	1	1	1	1	1	1	1	1	1	1	1
22	Cap	0212P02	2	2	2	2	2	2	2	2	2	2	2	2	2	2	2	2	2	2	2	2
23	Plug	055P61	1	1	1	1	1	1	1	1	1	1	1	1	1	1	1	1	1	1	1	1
24	Retainer, Sight Glass	GB1091	1	1	1	1	1	1	1	1	1	1	1	1	1	1	1	1	1	1	1	1
25	Screw, Retainer	011P11	4	4	4	4	4	4	4	4	4	4	4	4	4	4	4	4	4	4	4	4
26	Sight Glass	GA1228	1	1	1	1	1	1	1	1	1	1	1	1	1	1	1	1	1	1	1	1
27	Gasket, Sight Glass	GA1233	2	2	2	2	2	2	2	2	2	2	2	2	2	2	2	2	2	2	2	2
28	Rod, Connecting	ROD43	6	6	6	6	6	6					6	6	6	6	6	6	6			
		GD1226							6	6	6	6								6	6	6

D-LINE 6 CYLINDER DIRECT DRIVE COMPRESSORS
OUT OF PRODUCTION MODELS CONTINUED

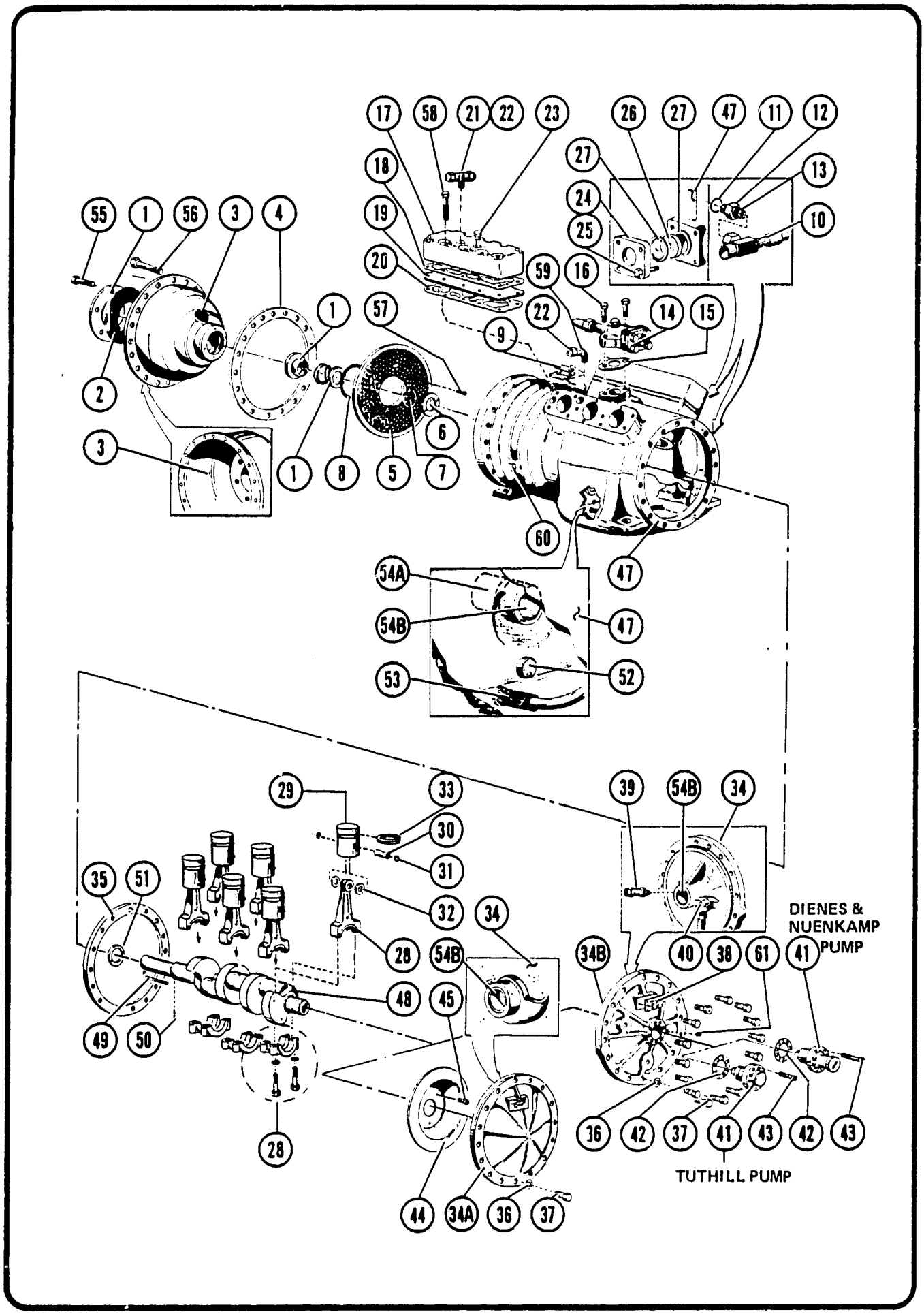

D-LINE 6 CYLINDER DIRECT DRIVE COMPRESSORS
OUT OF PRODUCTION MODELS CONTINUED

				60 HZ.										50 HZ.								
			SPECIFICATIONS: DISPL. (CFM)	1698			2034			2412				1410				1698			2010		
			SPECIFICATIONS: BORE X STROKE (IN)	2 x 1 1/2			2 3/16 x 1 1/2			2 3/16 x 1 49/64				2 x 1 1/2				2 3/16 x 1 1/2			2 3/16 x 1 49/64		
			SPECIFICATIONS: COMP. MODEL	50DL	75DH/LF	100DPCF	50DPEL	75DPC/ELF	150DPHF	75DPL	100DPK/ELF	150DPCF	200DPHF	30DEL5	50DC5/ELF5	75DCF5	100DPHF5	50DPL5	75DPH5/LF5	100DPCF5	50 DPEL5	75DPL5/ELF5	150DPHF5
	DESCRIPTION		PART NO.	QUANTITY PER MODEL																			
29	Piston		GB1001				6	6	6	6	6	6	6					6	6	6	6	6	6
			GB1003	6	6	6								6	6	6	6						
30	Piston, Pin *		PIN40	6	6	6								6	6	6	6						
			PIN41				6	6	6	6	6	6	6					6	6	6	6	6	6
31	Retainer, Piston Pin		0580P11	12	12	12	12	12	12	12	12	12	12	12	12	12	12	12	12	12	12	12	12
32	Washer, Piston		GA1013	12	12	12	12	12	12	12	12	12	12	12	12	12	12	12	12	12	12	12	12
33	Ring, Piston		GA1014				6	6	6	6	6	6	6					6	6	6	6	6	6
			GA1026	6	6	6								6	6	6	6						
34	Cover, Pump End	A	GD1047T3	1	1									1	1	1							
		B	GD1218T1			1	1	1	1	1	1	1	1				1	1	1	1	1	1	1
35	Gasket, End Cover		GA1209	1	1	1	1	1	1	1	1	1	1	1	1	1	1	1	1	1	1	1	1
36	Seal, Screw		GKT342	1	1	1	1	1	1	1	1	1	1	1	1	1	1	1	1	1	1	1	1
37	Screw, End Cover		012P13	16	16	16	16	16	16	16	16	16	16	16	16	16	16	16	16	16	16	16	16
38	I.D. Tag		—	1	1	1	1	1	1	1	1	1	1	1	1	1	1	1	1	1	1	1	1
39	Valve, Pressure Relief		GA1581			1	1	1	1	1	1	1	1				1	1	1	1	1	1	1
40	Elbow, Connecting		051P36			1	1	1	1	1	1	1	1				1	1	1	1	1	1	1
41	Pump, Oil		PMP85A			1	1	1	1	1	1	1	1				1	1	1	1	1	1	1
42	Gasket, Oil Pump		GKT312			1	1	1	1	1	1	1	1				1	1	1	1	1	1	1
43	Screw, Oil Pump		034P10			8	8	8	8	8	8	8	8				8	8	8	8	8	8	8
44	Slinger, Oil		GC146T2	1	1									1	1	1							
45	Screw, Slinger		SCR30	3	3									3	3	3							
47	Crankcase *		CCS47T1	1	1	1								1	1	1	1						
			CCS47T2				1	1	1									1	1	1			
			GE1083							1	1	1	1								1	1	1
48	Crankshaft		CKS34	1	1	1	1	1	1					1	1	1	1	1	1	1			
			GD1227							1	1	1	1								1	1	1
49	Key, Shaft		KIT369	1	1	1	1	1	1	1	1	1	1	1	1	1	1	1	1	1	1	1	1
50	Pin, Spring		PIN80T3	1	1	1	1	1	1	1	1	1	1	1	1	1	1	1	1	1	1	1	1
51	Washer, Inner Thrust		GA1969	1	1	1	1	1	1	1	1	1	1	1	1	1	1	1	1	1	1	1	1
52	Valve, Foam Control		VAL496	1	1	1	1	1	1	1	1	1	1	1	1	1	1	1	1	1	1	1	1
53	Strainer, Oil Assem.		GB1381	1	1	1	1	1	1	1	1	1	1	1	1	1	1	1	1	1	1	1	1
54	Bearing **	A	BRG123	1	1	1	1	1	1	1	1	1	1	1	1	1	1	1	1	1	1	1	1
		B	GA1550	2	2	2	2	2	2	2	2	2	2	2	2	2	2	2	2	2	2	2	2
55	Bolt, Seal Plate		012P11	6	6	6	6	6	6	6	6	6	6	6	6	6	6	6	6	6	6	6	6
56	Bolt, Seal Housing		012P13	16	16	16	16	16	16	16	16	16	16	16	16	16	16	16	16	16	16	16	16
57	Filter, Screw		SCR69	8	8	8	8	8	8	8	8	8	8	8	8	8	8	8	8	8	8	8	8
58	Screw, Head		012P27	20	20	20	20	20	20	20	20	20	20	20	20	20	20	20	20	20	20	20	20
59	Elbow, Crankcase		072P01	1	1	1	1	1	1	1	1	1	1	1	1	1	1	1	1	1	1	1	1
60	Plug, Crankcase		055P62	1	1	1	1	1	1	1	1	1	1	1	1	1	1	1	1	1	1	1	1
61	Plug, End Cover		055P71	2	2	2	2	2	2	2	2	2	2	2	2	2	2	2	2	2	2	2	2

**Field replacement of bearings require line boring. Refer to National Service Bulletin SR116.
*Not available as separate item.

D/B METIC AND D-LINE VALVE PLATE ASSEMBLIES
2, 3, 4 AND 6 CYLINDER MODELS

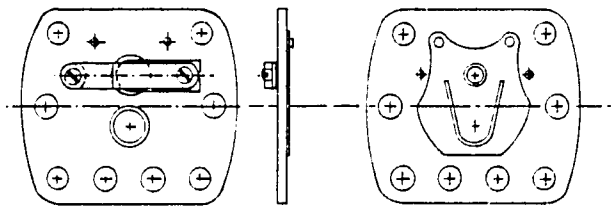

GB 160 - All 2 cylinder fractional compressors
Valve plate assembly 2 cylinder models.

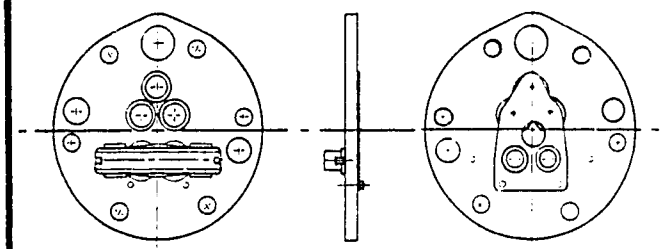

GB 1042 - All 2 cylinder integral compressors
Valve plate assembly 2 cylinder integral models.

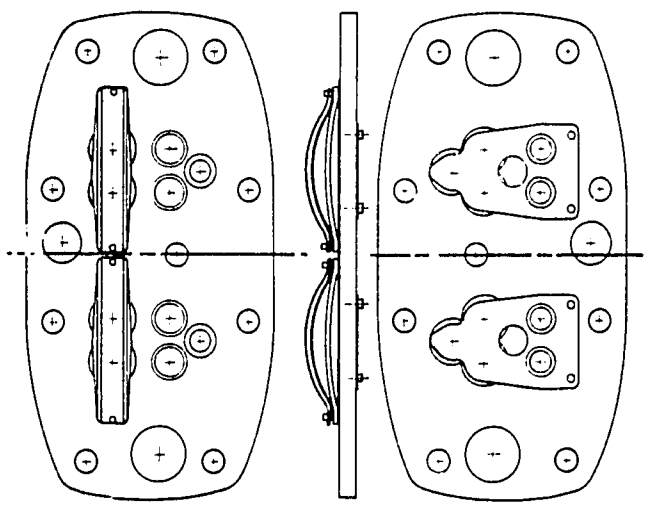

GC 1162 - Non-unloading compressor
Valve plate assembly for 3 and 4 cylinder models without unloading.

Unloading compressors
Valve plate is required as a right hand valve plate (facing motor) for all 3 and 4 cylinder models.

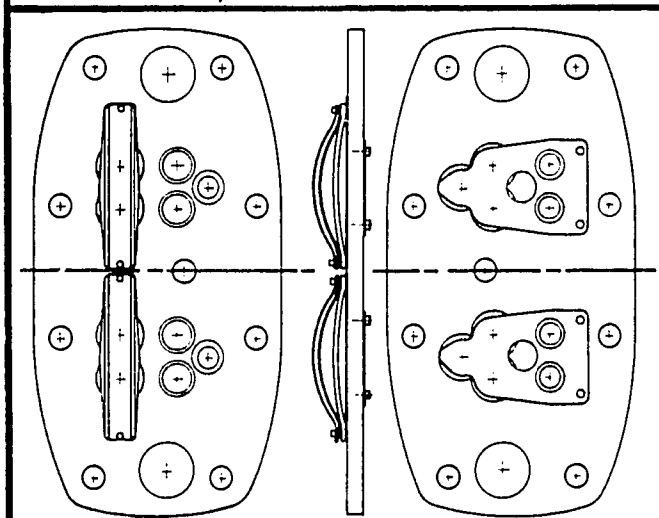

PLT 317A - Unloading plate
Valve plate assembly for all 3 and 4 cylinder models equipped with unloading. (1) per compressor on left hand side.

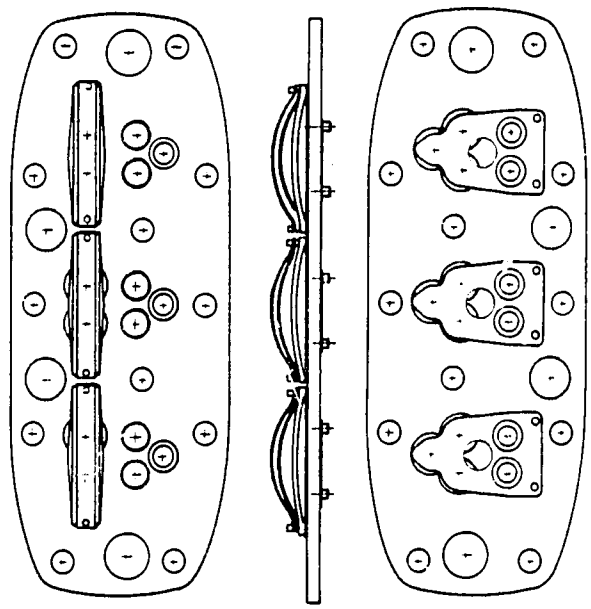

PLT 2001A - Non-unloading compressors
Valve plate required for all 6 cylinder compressors.

Unloading compressors
Valve plate required as a left hand valve plate (facing motor) for all 6 cylinder models.

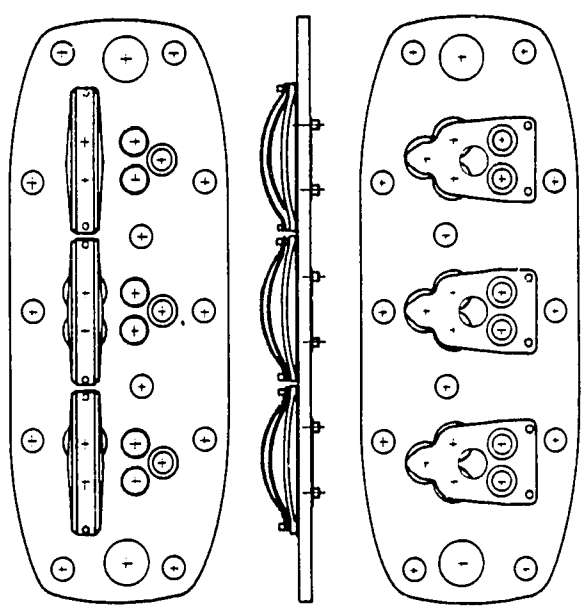

PLT 2002A - Unloading plate
Valve plate assembly for all 6 cylinder models equipped with unloading (1) per compressor located on right hand side of the compressor.

Note: See page 48 for unloader kit information;

D/B METIC AND D-LINE GASKETS—ALL MODELS

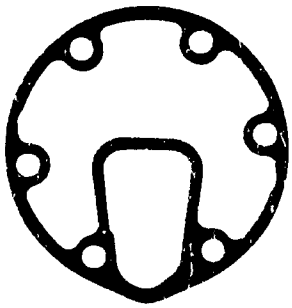

GKT 343
Head to plate, all 2 cylinder integral models.

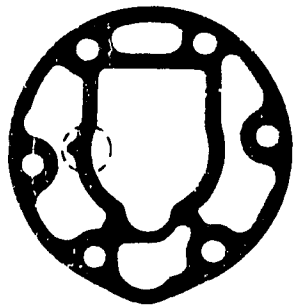

GKT 370
Deck to plate, all 2 cylinder integral models with $1^{13}/_{16}$" bore.

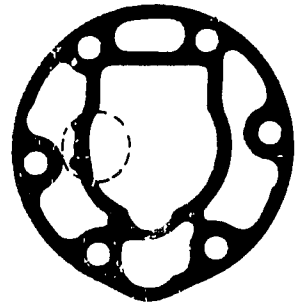

GKT 371
Deck to plate, all 2 cylinder integral models with 2" bore.

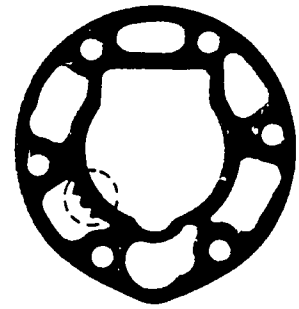

GKT 372
Deck to plate, all 2 cylinder integral models with $2^{3}/_{16}$" bore.

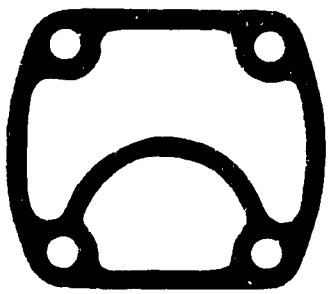

NB 3. Head to plate, all 2 cylinder fractional models.

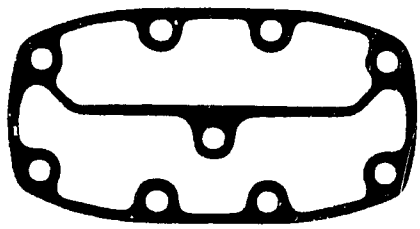

GB 1089. Head to plate, all 3 & 4 cylinder models.

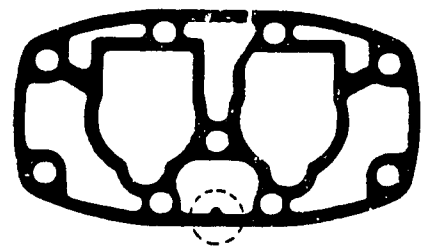

GKT 373. Deck to plate, all 3 & 4 cylinder models with $1^{13}/_{16}$" bore.

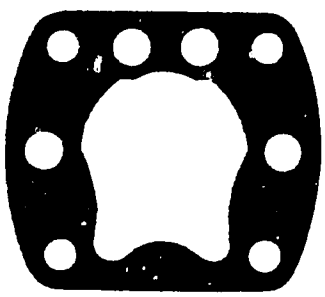

NB 4. Deck to plate, all 2 cylinder fractional models.

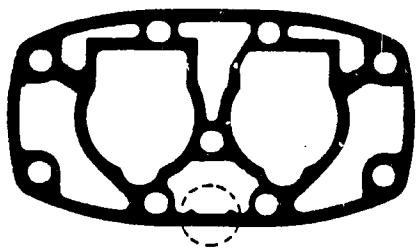

GKT 374. Deck to plate, all 3 & 4 cylinder models with 2" bore.

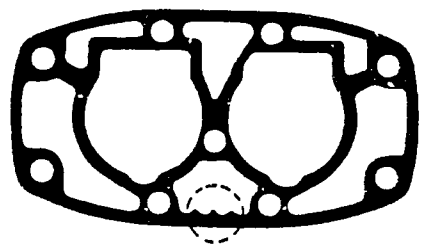

GKT 375. Deck to plate, all 3 & 4 cylinder models with $2^{3}/_{16}$" bore.

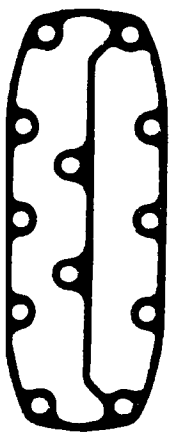

GC 1150
Head to plate, all 6 cylinder models.

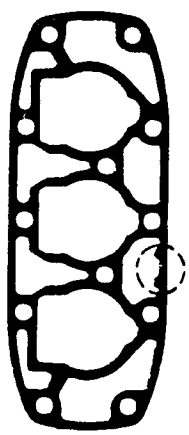

GKT 376
Deck to plate, all 6 cylinder models with 2" bore.

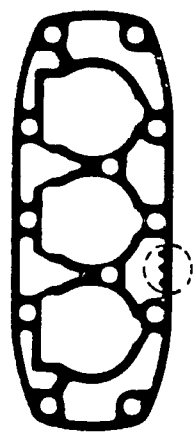

GKT 377
Deck to plate, all 6 cylinder models with $2^{3}/_{16}$" bore.

NOTE: Circled areas designate identifying tabs on gaskets.

D/B METIC HERMETIC COMPRESSORS ELECTRICAL ACCESSORIES

CYL.	HP	ELECTRICAL SERVICE	BOX ASSEMBLY NUMBER *	COVER	TERMINAL BOX	TERMINAL BLOCK	START RELAY	CAPACITORS START (QTY) RUN	KLIXON PART NUMBER	FRAME SIZE
2**	½	115-1-60 208/230-1-60 208/230-3-60	BOX4310A BOX4311A GB118	NB31 NB31 NB31	NC44 NC44 NC44	GB93 GB93 GB93	GB191T1 GB191T3 N/R	(1)NC54T11 (1)NB50T1(1)NC54T11 N/R	CONSULT ††† FACTORY	
	¾	115-1-60 208/230-1-60 208/230-3-60	BOX4309A BOX4311A GB285† GB304 GB286†	GB277 GB277 GB277	GC386 GC386 GC386	GB93 GB93 GB93	GB191T1 GB191T3 N/R	(1)NC54T11 (1)NB50T1(1)NC54T11 N/R	CONSULT ††† FACTORY	
	1	208/230-1-60 208/230-3-60	GB285 GB286	GB277 GB277	GC386 GC386	GB93 GB93	GB191T3 N/R	(1)NB50T1(1)NC54T11 N/R	CONSULT ††† FACTORY	
2	1½	208-1-60 230-1-60 208/230-3-60 460-3-60 575-3-60	BOX2511 BOX2511 BOX2512 BOX2513 BOX2510	COV110 COV110 COV110 COV110 COV110	BOX2867 BOX2867 BOX2867 BOX2867 BOX2867	GB93 GB93 GB93 GB93 GB93	GB126T4 GB126T4 N/R N/R N/R	(1)CPR18(1)CPR22 (1)CPR18(1)CPR22 N/R N/R N/R	GB1018T1 GB1018T1 GB1127T4 GB1127T5 N/R	6.29
	2	208-1-60 230-1-60 208/230-3-60 460-3-60 575-3-60	BOX2501 BOX2502 BOX2508 BOX2509 BOX2510	COV110 COV110 COV110 COV110 COV110	BOX2867 BOX2867 BOX2867 BOX2867 BOX2867	GB93 GB93 GB93 GB93 GB93	GB126T4 GB126T4 N/R N/R N/R	(1)CPR19(1)CPR23 (1)CPR19(1)CPR23 N/R N/R N/R	GB1018T3 GB1018T3 GB1127T4 GB1127T5 N/R	
	3	208-1-60 230-1-60 208/230-3-60 460-3-60 575-3-60	BOX2528 BOX2529 BOX2530 BOX2531 BOX2510	COV110 COV110 COV110 COV110 COV110	BOX2867 BOX2867 BOX2867 BOX2867 BOX2867	GB93 GB93 GB93 GB93 GB93	GB126T4 GB126T4 N/R N/R N/R	(2)CPR20(2)CPR22 (2)CPR20(2)CPR22 N/R N/R N/R	GB1019T2 GB1019T1 GB1127T1 GB1127T2 N/R	7.48
4	3	208-1-60 230-1-60 208/230-3-60 460-3-60 575-3-60	BOX2523 BOX2524 BOX2525 BOX2526 BOX2520	COV111 COV111 COV111 COV111 COV111	BOX2870 BOX2870 BOX2869 BOX2869 BOX2869	GA1207 GA1207 GA1207 GA1207 GA1207	GB126T4 GB126T4 N/R N/R N/R	(2)CPR20(2)CPR22 (2)CPR20(2)CPR22 N/R N/R N/R	GB1117T2 GB1117T1 GB1127T1 GB1127T2 N/R	8.77
3,4 6	5	208-1-60 230-1-60 208/230-3-60 460-3-60 575-3-60	BOX2514 BOX2564†† BOX2515 BOX2565†† BOX2566 BOX2567 BOX2520	COV111 COV111 COV111 COV111 COV111	BOX2871 BOX2871 BOX2870 BOX2870 BOX2870	GA1207 GA1207 GA1207 GA1207 GA1207	GB126T5 GB126T5 N/R N/R N/R	(2)CPR18(3)CPR22 (2)CPR18(3)CPR22 N/R N/R N/R	GB1128T2 GB1473T1†† GB1128T1 GB1473T2†† GB1126T5 GB1126T6 N/R	
	7½	208/230-3-60 460-3-60 575-3-60	BOX2518 BOX2519 BOX2520	COV111 COV111 COV111	BOX2870 BOX2870 BOX2870	GA1207 GA1207 GA1207	N/R N/R N/R	N/R N/R N/R	GB1126T2 GB1126T4 N/R	8.77
	10-22	208/230-3-60 460-3-60 575-3-60	BOX2521 BOX2521 BOX2521	COV111 COV111 COV111	BOX2872 BOX2872 BOX2872	GA1207 GA1207 GA1207	N/R N/R N/R	N/R N/R N/R	N/R N/R N/R	

†9HCL ONLY ††52HF ONLY N/R = NOT REQUIRED *INCLUDES TERMINAL BOX AND ALL COMPONENTS
**Valid for 5HCL, 8HCL, 9HCL, 10HCL, 11HCL only.

NOTES:

The above chart defines the correct Klixon selection for all new and rebuilt D/B-Metic compressors. The voltages listed reflect the current production designations, as used in West Hartford New Production. Some rebuilt machines may carry different voltage data, in accordance with the particular vintage motor design core used in the machine, but Klixon selection will remain the same.

i.e. 208/230-3-60 Same Klixon As 208/220, 240-3-60
460-3-60 Same Klixon As 440, 480-3-60

All replacement machines require a new Klixon. Due to possible Klixon usage changes, since original machine was put into service, and the possibility of damage to the Klixon during machine failure, it is **MANDATORY** that a new protector be installed on all replacement compressors. Failure to do this will result in compressor warranty being declared void.

††† Parts Department

UNLOADER KIT ACCESSORIES

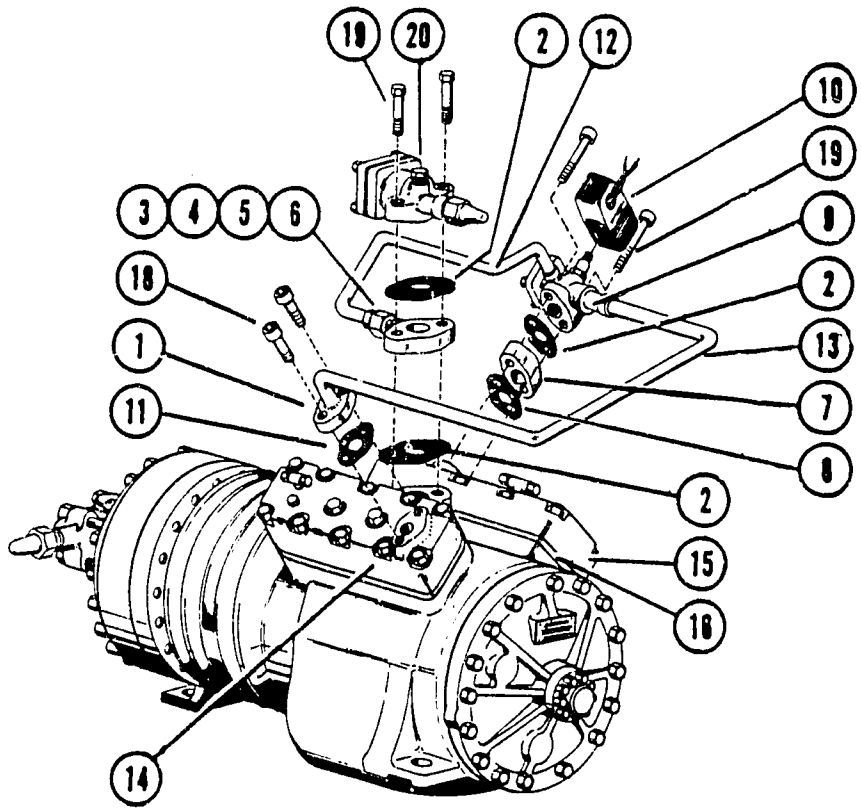

NOTE: RIGHT HAND (RH) AND LEFT HAND (LH) IS DESIGNATED BY VIEWING FROM MOTOR END OF COMPRESSOR.

QTY.		3 & 4 Cyl. with 1 1/2 In. Stroke		6 Cyl. with 1 1/2 In. Stroke		4 Cyl. with 2 3/16 In. Stroke		6 Cyl with 1 49/64 In. Stroke or 2 3/16 In. Stroke	
		KIT 167		KIT 168		KIT 394		KIT 374	
REF. NO.	PART DESCRIPTION	PART NO.	QTY.	PART NO.	QTY.	PART NO.	QTY.	PART NO.	QTY.
1	Flange	FLG8	1	FLG8	1	FLG8	1	FLG8	1
2	Gasket	GKT340	3	GKT340	3	GKT340	3	GKT340	3
3	Adapter Block	ADP65	1	ADP64	1	ADP64	1	ADP64	1
4	Adapter Fitting	ADP71	1	ADP71	1	ADP71	1	ADP71	1
5	Gasket	GA430	1	GA430	1	GA430	1	GA430	1
6	Adapter Fitting	ADP77	1	ADP77	1	ADP77	1	ADP77	1
7	Adapter Fitting	ADP66	1	ADP66	1	ADP66	1	ADP66	1
8	Gasket	GKT159	1	GKT159	1	GKT159	1	GKT159	1
9	Valve	VAL357	1	VAL357	1	VAL357	1	VAL357	1
10	Coil (24V)	COL117T1	*	COL117T1	*	COL117T1	*	COL117T1	*
	Coil (115V)	COL117T2	*	COL117T2	*	COL117T2	*	COL117T2	*
	Coil (208/230V)	COL117T4	*	COL117T4	*	COL117T4	*	COL117T4	*
11	Gasket	GKT398	1	GKT398	1	GKT398	1	GKT398	1
12	Tubing	TUB2057T1	1	TUB2059	1	TUB2057T2	1	TUB2061	1
13	Tubing	TUB2058T1	1	TUB2060	1	TUB2058T2	1	TUB2062	1
14	Cyl. Head RH	HD94	1	HD98	1	HD94	1	HD98	1
15	Cyl. Head LH	HD93	1	HD97	1	HD93	1	HD97	1
16	Valve Plt. Assy.	PLT317A	1	PLT2002A	1	PLT317A	1	PLT2002A	1
17	Screw - Valve	0346P19	2	0346P19	2	0346P19	2	0346P19	2
18	Screw -Flange	0341P13	2	0341P13	2	0341P13	2	0341P13	2
19	Bolt - Valve	011P29	2	014P29	2	014P29	2	014P29	2
20	Discharge Valve	—	**	—	**	—	**	—	**

*Specify (1) one only.
**Discharge Valves are NOT INCLUDED with Unloader Kits.

Kits valid for 60 Hz. and 50 Hz., direct drive, hermetic machines high temperature applications. Refer to parts listing on pages 9 thru 44 for stroke specifications (example: 204PHF non-unloading specifications identical to 204UPHF).

1091

D/B METIC AND D-LINE COMPRESSOR PARTS KITS

TERMINAL STUD KITS FOR D/B METIC FRACTIONAL COMPRESSORS

MODEL	ELECTRICAL SERVICE	(QTY) TERMINAL POST	TERMINAL* PLATE ASSEMBLY	GASKET
5HCL	115/208/230/460-1-60	3	NB15	NA8
8HCL	115/208/230/460-3-60	3	NB15	
9HCL 10HCL 11HCL	115/208/230/460-1-60	3	GB283	GA369
	115/208/230/460-3-60	6	GB282	

* Includes Terminal Posts and Plate, Assembled.

TERMINAL STUD KITS FOR D/B METIC INTEGRAL COMPRESSORS

CYL.	HP RANGE	ELECTRICAL SERVICE	QTY. OF ACTIVE TERM. POSTS	KIT NO.*
2	1½ → 3	208/230-1-60	3	KIT 161
		575-3-60	3	KIT 162
		208/230/460-3-60	6	KIT 163
3, 4 6	3 → 5	208/230-1-60	3	KIT 164
	3 → 7½	575-3-60	3	KIT 165
		208/230/460-3-60	6	KIT 166†
		208/230/460-3-60	6 Active Plus 2 Inactive Motor Protector Terminals.	KIT 335
	10 → 20	208/230/460-3-60	6 Active Plus 2 Active Internal Thermostat Terminals.	KIT 334
		575-3-60	3 Active Plus 2 Active Internal Thermostat Terminals	KIT 336

* Includes All Nuts, Washers, Insulators, Terminals, Spacers, Plate, Dummy Terminals
† No Motor Protector Terminal Holes Drilled in Crankcase

GASKET KITS FOR D/B METIC AND D-LINE

COMPRESSOR	KIT NO.
2 Cylinder Fractional (5HCL, 8HCL, 9HCL, 10HCL, 11HCL)	GA111
2 Cylinder Integral	KIT 353
3 & 4 Cylinder Integral	KIT 354
6 Cylinder Integral	KIT 355

VALVE ASSEMBLY REBUILDING KITS* FOR NON-UNLOADING D/B METIC AND D-LINE

COMPRESSOR	KIT NO.†
2 Cylinder Fractional	††
2, 3, 4, 6 Cylinder Integral	KIT 373**

† Order Qty. Kits (1) For Each Cylinder.
†† Sold as Complete Valve Plate Assembly Only.
* See Page 45 For Illustration.
** See Page 45 For Unloading Valve Assemblies.

OIL SYSTEM KITS

COMPRESSOR	KIT DESCRIPTION	KIT NO.
3, 4 and 6 Cylinder	Converting Old Style of No Oil Pump To Latest Oil Pump For Machines Witn 1-3/8" Main Bearing I.D.	Kit 357
	Converting Old Style Or No Oil Pump To Latest Oil Pump For Machines With 1-1/2" Main Bearing I.D.	Kit 358
All	Oil Equalization (Multiple Compressor System)	Kit 333

HEATER KITS

NOMINAL CONTROL VOLTAGE	CRANKCASE HEATERS DESCRIPTION	PART #
120V †	100W Element, Single Phase with Flexible Conduit & Leads	GA1522
240V *		GA1521

†Optional
*Standard

D/B METIC AND D-LINE VALVE PLATE ASSEMBLIES 2, 3, 4 AND 6 CYLINDER MODELS

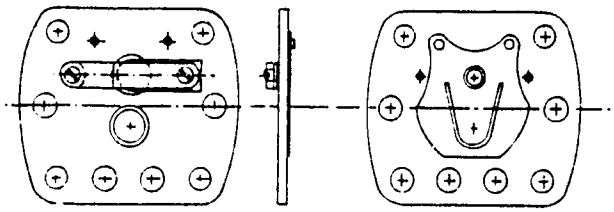

GB 160 - All 2 cylinder fractional compressors
Valve plate assembly 2 cylinder models.

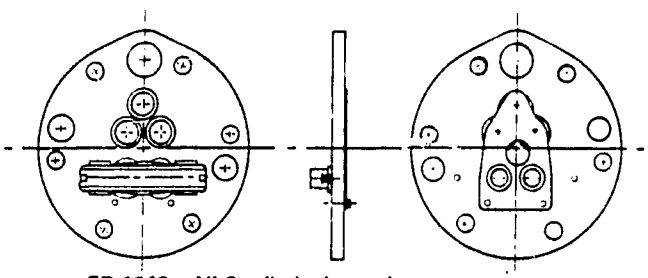

GB 1042 - All 2 cylinder integral compressors
Valve plate assembly 2 cylinder integral models.

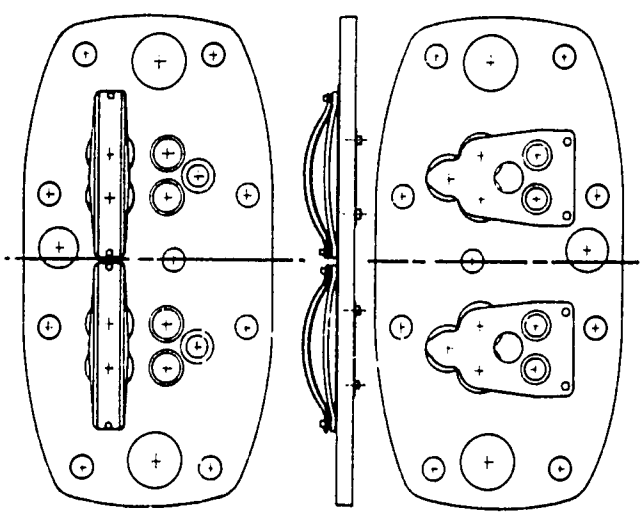

GC 1162 - Non-unloading compressor
Valve plate assembly for 3 and 4 cylinder models without unloading.

Unloading compressors
Valve plate is required as a right hand valve plate (facing motor) for all 3 and 4 cylinder models.

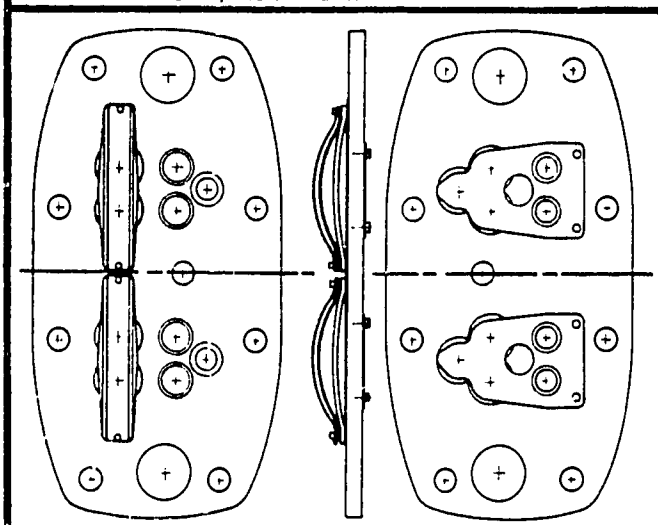

PLT 317A - Unloading plate
Valve plate assembly for all 3 and 4 cylinder models equipped with unloading. (1) per compressor on left hand side.

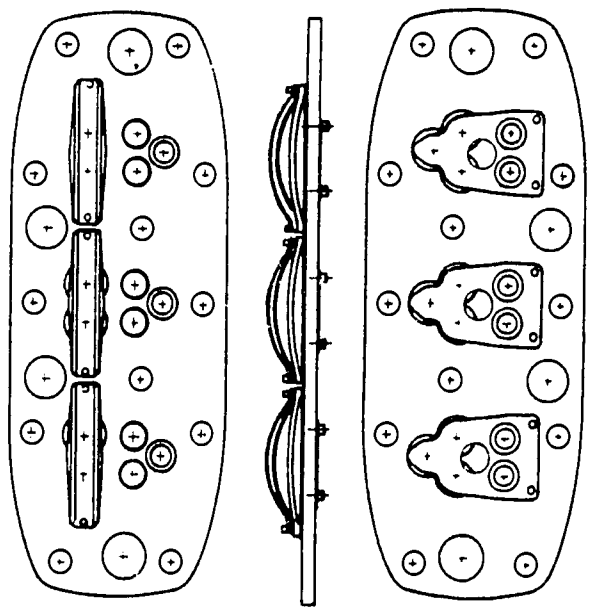

PLT 2001A - Non-unloading compressors
Valve plate required for all 6 cylinder compressors.

Unloading Compressors
Valve plate required as a right hand valve plate (facing motor) for all 6 cylinder models.

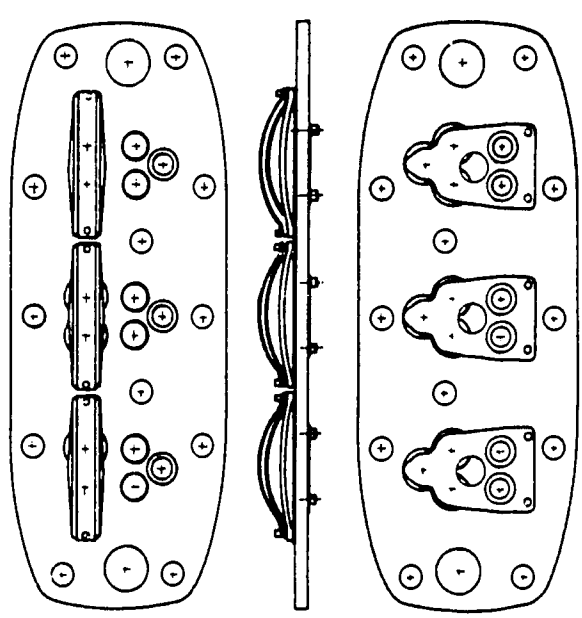

PLT2002A - Unloading plate
Valve plate assembly for all 6 cylinder models equipped with unloading (1) per compressor located on left hand side of the compressor.

Note: See page 48 for unloader kit information;

109

D/B METIC AND D-LINE MOUNT ASSEMBLIES

D/B METIC SPRING MOUNT ASSEMBLIES

CYL.	HP	60 HERTZ COMPRESSOR MODELS	60 HERTZ SPRING ASSEMBLY KIT NUMBER PUMP END	60 HERTZ SPRING ASSEMBLY KIT NUMBER MOTOR END	50 HERTZ COMPRESSOR MODELS	50 HERTZ SPRING ASSEMBLY KIT NUMBER PUMP END	50 HERTZ SPRING ASSEMBLY KIT NUMBER MOTOR END
2	½	5HCL	GB94	GB119			
	¾	8HCL					
		9HCL					
	1	10HCL					
		11HCL					
	1½	15H/CF/LF	KIT393T3	KIT393T4	15HF5	KIT393T3	KIT393T4
		15C/ELF			15H5/CF5/LF5		
		15L			15C5/ELF5		
		-			15L5		
	2	20HF	KIT393T3	KIT393T4	20HF5	KIT393T3	KIT393T5
		20H/CF/LF			20H5/CF5/LF5		
		20C/ELF			20C5/ELF5		
		20L			22L5		
	3	30HF	KIT393T5	KIT393T5	30CF5	KIT393T5	KIT30JT5
		30CF			30HF5		
		30H/LF			32H5/LF5		
		32C/ELF			-		
3	5	52HF	KIT393T6	KIT393T7	52HF5	KIT393T6	KIT393T7
4	3	30C/ELF	KIT393T6	KIT393T7	30C5/ELF5	KIT393T6	KIT393T7
		30L			30L5		
		-			41PL		
	5	50CF	KIT393T6	KIT393T7	50CF5	KIT393T6	KIT393T7
		50H/LF			50H5/LF5		
		50C/ELF			51PH5/C5/LF5		
		51PL			62PC5/ELF5		
	7½	75HF	KIT393T6	KIT393T7	75HF5	KIT393T6	KIT393T7
		75CF			-		
		76PH/C/LF			-		
		77PC/ELF			-		
	10	100PHF	KIT393T6	KIT393T7	101PHF5/CF5	KIT393T6	KIT393T6
		111PHF/CF			111PHF5/CF5		
	15	151PHF/CF	KIT393T6	KIT393T9	-	-	-
6	5	-	-	-	51PL5	KIT393T7	KIT393T9
	7½	76PL	KIT396T7	KIT393T8	75PL5	KIT393T7	KIT393T9
		-	-	-	77PH5/C5/ELF5		
	10	101PH/C/ELF	KIT393T7	KIT393T9	101PH5/C5/ELF5	KIT393T7	KIT393T9
		104PL			-	-	-
	15	154PH/C/ELF	KIT393T7	KIT393T9	151PHF5/CF5	KIT393T7	KIT393T9
	17½	201PHF/CF			201PHF5/CF5		
	20	204PHF/CF			-	-	-

D/B METIC SPRING MOUNT ASSEMBLIES – OLD MODELS

CYL.	HP	60 HERTZ COMPRESSOR MODELS	60 HERTZ SPRING ASSEMBLY KIT NUMBER PUMP END	60 HERTZ SPRING ASSEMBLY KIT NUMBER MOTOR END	50 HERTZ COMPRESSOR MODELS	50 HERTZ SPRING ASSEMBLY KIT NUMBER PUMP END	50 HERTZ SPRING ASSEMBLY KIT NUMBER MOTOR END
3	2	-	-	-	20L5	KIT393T6	KIT393T7
4		-	-	-	20H/LF5	KIT393T6	KIT393T7
	3	30EL	KIT393T6	KIT393T7	-	-	-
		-	-	-	30EL5	KIT393T7	KIT393T9
6	5	50L	KIT393T7	KIT393T8	50 PL5	KIT393T7	KIT393T9
		50PEL			50PEL5		
		-	-	-	50C5/ELF5		
	7½	75PL	KIT393T7	KIT393T8	75PH5/LF5	KIT393T7	KIT393T9
		75PC/ELF			75PC5/ELF5		
		75H/LF			75CF5		
	10	100PHC/ELF	KIT393T7	KIT393T9	100PH/C/ELF5	KIT393T7	KIT393T9
		100PCF			100PCF5		
		-	-	-	100PHF5		
	15	150PHF	KIT393T7	KIT393T9	150PHF5	KIT393T7	KIT393T9
		150PCF			-	-	-
	17½	174PCF	KIT393T7	KIT393T9	200PHF5	KIT393T7	KIT393T9
		200PHF					

HERMETIC COMPRESSORS

Install as illustrated, place compressor on spring mounts and allow springs to deflect their maximum under the compressor weight. Run locknut down to flat washer, then back off 2 full turns.

Running the compressor with the locknut torqued down on the outer washer will destroy the effectiveness of the spring mount.

NOTE: DO NOT USE this type of mounting on D-Line Direct Drive Compressors.

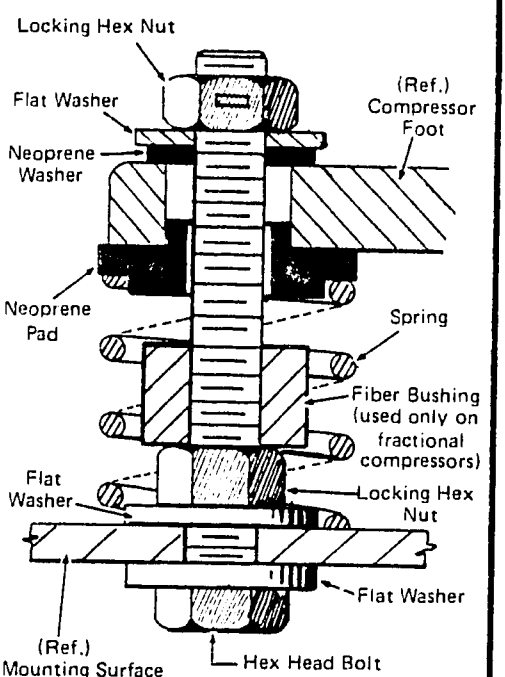

NOTE: One (1) spring mount assembly is required for each mounting foot, i.e. fractional compressors - 3 legs = 3 kits.

D-LINE SOLID MOUNT ASSEMBLIES

USEAGE MANDATORY ON DIRECT DRIVE COMPRESSORS, BUT MAY BE USED ON SEMI-HERMETIC COMPRESSORS.

KIT 160, 1 set per D-Line compressor. NOTE: This type of mount is used for all Direct Drive Compressors.

NOTE: Kit 160 has four (4) solid mount assemblies per kit.

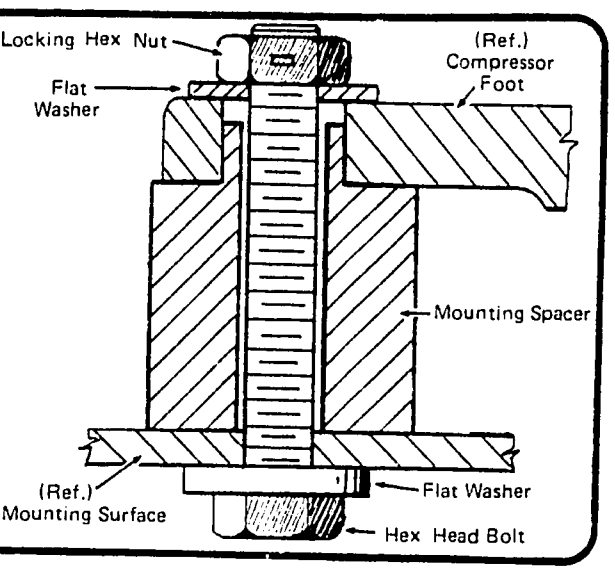

1044

DUNHAM-BUSH

AIR CONDITIONING, REFRIGERATION, HEATING PRODUCTS AND ACCESSORIES

MAIN OFFICES

175 SOUTH STREET WEST HARTFORD, CONNECTICUT 06110

FACTORIES

WEST HARTFORD DIVISION
179 South Street
West Hartford, Connecticut
06110

HARRISONBURG DIVISION
101 Burgess Road
Harrisonburg, Virginia
22801

MARSHALLTOWN DIVISION
811 East Main Street
Marshalltown, Iowa
50158

RIVERSIDE DIVISION
1850 Massachusetts Ave.
Riverside, California
92507

SUBSIDIARIES

DUNHAM-BUSH of Canada Limited
140 Wendell Avenue
Weston, Ontario

DUNHAM-BUSH, LTD.
Fitzherbert Road, Farlington
Portsmouth, Hampshire, England

DUNHAM-BUSH INTERNATIONAL: 175 South Street, West Hartford, Connecticut 06110, U.S.A.
CABLE: DUNBUSH or TELEX: 994469

SALES OFFICES

ALABAMA
Birmingham
Mobile

ARIZONA
Phoenix

ARKANSAS
Little Rock

CALIFORNIA
Arcadia
Los Angeles
San Diego
San Francisco

COLORADO
Denver

CONNECTICUT
Hartford
New Haven

FLORIDA
Jacksonville
Miami
Orlando
Tampa

GEORGIA
Atlanta

HAWAII
Honolulu

ILLINOIS
Chicago
Peoria
Rockford

INDIANA
Indianapolis
Michigan City

IOWA
Des Moines

KANSAS
Lenexa

KENTUCKY
Louisville

LOUISIANA
New Orleans
Shreveport

MAINE
Lewiston

MARYLAND
Baltimore
Silver Spring

MASSACHUSETTS
Boston
Springfield

MICHIGAN
Detroit
Grand Rapids
Kalamazoo

MINNESOTA
Minneapolis

MISSISSIPPI
Jackson

MISSOURI
Kansas City
St. Louis

MONTANA
Billings
Great Falls

NEBRASKA
Omaha

NEW JERSEY
Little Falls
South Amboy
Union

NEW MEXICO
Albuquerque

NEW YORK
Albany
Buffalo
New York City
Rochester
Syracuse

NORTH CAROLINA
Charlotte
Greensboro

OHIO
Akron
Cincinnati
Cleveland
Columbus
Dayton
Delaware
Toledo

OKLAHOMA
Oklahoma City
Tulsa

OREGON
Portland

PENNSYLVANIA
Harrisburg
Philadelphia
Pittsburgh
Pittston

RHODE ISLAND
Providence

SOUTH CAROLINA
Columbia
Greenville

TENNESSEE
Chattanooga
Memphis
Knoxville
Nashville

TEXAS
Austin
Corpus Christie
Dallas
El Paso
Fort Worth
Houston
Lubbock
San Antonio

UTAH
Salt Lake City

VIRGINIA
Alexandria
Richmond

WASHINGTON
Seattle
Spokane

WEST VIRGINIA
Barboursville

WISCONSIN
Milwaukee

DUNHAM-BUSH, INC. • West Hartford, Connecticut 06110, U.S.A.
4032F-2M-980F-678E
one of The Signal Companies

Exhibit H-3

DUNHAM-BUSH

"HAH(M)" AND "VAH(M)" LOW AND MEDIUM STATIC AIR HANDLING UNIT

REPAIR PARTS LIST FOR MODEL "C" (FROM 1968)

ORDERING INSTRUCTIONS

1. Complete part number and its description is required when ordering.
2. When a part number is not known or shown in the parts catalog, complete model and serial number of the unit on which the part is to be used should be given.
3. Send all orders to: **Dunham-Bush, Inc., Parts Department, Harrisonburg, Virginia**
   Unless otherwise Designated
4. We reserve the right to ship substitute parts or alternate parts when interchangeable with the part ordered. The invoice will cover the price of the actual part shipped.
5. All orders requiring **Special Handling** for delivery to either the local bus station or the airport, will have a $25 additional charge invoiced or actual cost, whichever is higher.
6. Refer to the latest revision of Form 1278 for terms of sale.
7. Refer to the latest revision of Form 6690 for pricing.

1096

REPAIR PARTS LIST
HAH and VAH
LOW and MEDIUM STATIC
MODEL C AIR HANDLING UNITS

PART NUMBER	DESCRIPTION	AH-12	AH M12	AH-22	AH M22	AH-32	AH M32	AH-40	AH M40	AH-48	AH M48	AH-64	AH M64	AH-80	AH M80	AH-100	AH M100	AH-120	AH M120	AH-150	AH M150	AH-180	AH M180	AH-240	AH M240	AH-320	AH M320
A320366	Shaft	1	1																								
A320367	Shaft			1	1																						
A354272	Shaft					1																					
A378639	Shaft						1																				
A354263	Shaft							1	1																		
A372655	Shaft									1																	
A377627	Shaft										1																
A372646	Shaft											1															
A377617	Shaft												1														
A354258	Shaft													1													
A372229	Shaft														1												
A354212	Shaft															1											
A359481	Shaft																1										
A354029	Shaft																	1									
A372231	Shaft																		1								
A320375	Shaft																			1							
A377580	Shaft																				1						
A354361	Shaft																					1					
A356551	Shaft																						1				
A320377	Shaft																							1			
A358696	Shaft																								1		
A320378	Shaft																									1	
A360024	Shaft																										1
E218029	Bearing	2	2	2		2																					
E218118	Bearing				2		2	2	2	2	2	2	4	2	4	2	4										
E218104	Bearing																	2	4	2	4						
E719061	Bearing																					2	4	2	4	2	4
B455054-013	Blower Wheel	1																									
B455054-014	Blower Wheel		1																								
B455054-004	Blower Wheel			1		1																					
B455054-017	Blower Wheel				1						2																
B455054-007	Blower Wheel						1						2														
B455054-015	Blower Wheel							1						2		2											
B455054-018	Blower Wheel								1						2												
B455054-011	Blower Wheel									2		2															
B455054-009	Blower Wheel															2											

REPAIR PARTS LIST
HAH and VAH
LOW and MEDIUM STATIC
MODEL C AIR HANDLING UNITS

PART NUMBER	DESCRIPTION	AH-12	AH M12	AH-22	AH M22	AH-32	AH M32	AH-40	AH M40	AH-48	AH M48	AH-64	AH M64	AH-80	AH M80	AH-100	AH M100	AH-120	AH M120	AH-150	AH M150	AH-180	AH M180	AH-240	AH M240	AH-320	AH M320
B455054-016	Blower Wheel																2		2								
B455054-008	Blower Wheel																	2									
B455054-010	Blower Wheel																			2							
B455054-003	Blower Wheel																				2						
B455054-012	Blower Wheel																					2					
B455054-002	Blower Wheel																						2	2			
B455054-005	Blower Wheel																								2	2	
B354344	Blower Housing	1																									
B377700	Blower Housing		1																								
B354083	Blower Housing			1		1				2		2															
B356992	Blower Housing				1						2																
B368673	Blower Housing						1						2														
B354077	Blower Housing							1						2		2	2										
B375153	Blower Housing								1																		
B374406	Blower Housing																				2						
C354023	Blower Housing																2		2	2							
C376536	Blower Housing																	2									
C354319	Blower Housing																				2						
C373549	Blower Housing																					2					
D354325	Blower Housing																						2	2			
D354339	Blower Housing																								2	2	

NOTES:
1. When ordering drives or motors from Dunham-Bush, Inc., specify unit model and serial number and complete name plate data on the motor.
2. Replacement filters are listed by filter type and section style on the latest issue of Form 66002.

Exhibit A-4

DUNHAM-BUSH

RECIPROCATING COMPRESSOR CONSOLIDATED PARTS PRICE LIST

COMPRESSOR LINE	FOR SELECTION REFER TO: (LATEST REVISION)
D/B-Metic & D-Line	Form No. 4032
Big-4 Compressors (a) semi-hermetic (b) direct-drive	Form No. 4056 , 4056-1 4056-2
Belt-Drive Compressors	Form No. 4004
Multi-Drive Compressors (a) semi-hermetic (b) direct-drive	Form No. 4022

TERMS OF SHIPMENT: F.O.B. SHIPPING POINT.

ALL PRICES SUBJECT TO CHANGE WITHOUT NOTICE.

PARTS WILL BE INVOICED AT PRICES IN EFFECT AT THE TIME OF SHIPMENT.

ORDERING INSTRUCTIONS

1. Complete part number and its description is required when ordering.
2. When a part number is not known or shown in the parts catalog, complete model and serial number of the compressor on which the part is to be used should be given.
3. Send all orders to: Dunham-Bush, Inc. Service Parts Dept.
   179 South Street, West Hartford, Connecticut 06110
4. All prices are for one each part or kit as applicable.
5. Federal, state, local or other taxes are not included in the attached prices.
6. We reserve the right to ship substitute parts or alternate parts when interchangeable with the part ordered. The invoice will cover the price of the actual part shipped.
7. All orders requiring SPECIAL HANDLING, will have $50 net additional charge invoiced or actual cost whichever is higher. This includes delivery to the airport, bus station, etc.
8. Minimum billing is $25.00
9. Refer to latest revision of Form 1278 for terms of sale.

PART NUMBER	DESCRIPTION	LIST PRICE
*ASY136A	UNLOADER CONT ASSY	1,521.25
ADP15	ADAPTER	54.81
ADP64	ADAPTER BLOCK	50.46
ADP65	ADAPTER BLOCK	44.73
ADP66	ADAPT FITTING	17.62
ADP71	ADAPTER FITTING	17.07
ADP77	EQUAL VALVE ADAPT	13.97
ASY161A	ELEC CONT ASSY	443.20
ASY162A	CAP CONT ASSY	155.04
ASY230	SEE 050148A1	.00
ASY265A	THERMOSTAT	41.02
ASY268A	UNLOADER CONT ASSY	1,525.45
ASY859	OIL COOLER ASSY	105.36
ASY860	OIL COOLER ASSY	105.36
ASY862	PISTON ASSY PST51A	137.11
ASY864	PISTON ASSY PST38A	85.23
A650B16	GASKET 65016	5.34
BFRK1	115V CONTROL KIT	206.76
BFRK2	230V CONTROL KIT	207.92
BLK28	TERM SEP BLOCK	13.23
BRG123	BEARING	14.60
BRG31	BEARING OIL PUMP	99.69
BRG47	BEARING	73.01
BRG53	PUMP HSG BEARING	26.43
BRG54	CRNKCASE MAIN BEAR	18.76
BUS39	BUSHING	3.05
BUS78	BUSHING	1.75
BOX2261	TERM BOX W/COV	48.97
BOX2501	B/M BOX ASSY NO	174.52
BOX2502	B/M BOX ASSY NO	174.52
BOX2508	B/M BOX ASSY NO	154.62
BOX2509	B/M BOX ASSY NO	115.74
BOX2510	B/M BOX ASSY NO	55.12
BOX2511	B/M BOX ASSY NO	154.62
BOX2512	B/M BOX ASSY NO	145.45
BOX2513	B/M BOX ASSY NO	137.16
BOX2514	B/M BOX ASSY NO	276.69
BOX2515	B/M BOX ASSY NO	87.98
BOX2518	B/M BOX ASSY NO	172.67
BOX2519	B/M BOX ASSY NO	144.69
BOX2520	B/M BOX ASSY NO	69.54
BOX2521	B/M BOX ASSY NO	66.37
BOX2523	B/M BOX ASSY NO	176.28
BOX2524	B/M BOX ASSY NO	170.87
BOX2525	B/M BOX ASSY NO	192.40
BOX2526	B/M BOX ASSY NO	134.58
BOX2528	B/M BOX ASSY NO	162.03
BOX2529	B/M BOX ASSY NO	204.74
BOX2530	B/M BOX ASSY NO	145.45
BOX2531	B/M BOX ASSY NO	124.87
BOX2564	B/M BOX ASSY NO	280.48
BOX2565	B/M BOX ASSY NO	260.23
BOX2566	B/M BOX ASSY NO	174.48
BOX2567	B/M BOX ASSY NO	156.35
BOX2867	TERMINAL BOX	30.14
BOX2868	TERMINAL BOX	33.70
BOX2869	TERMINAL BOX	94.75
BOX2870	TERMINAL BOX	31.69
BOX2871	TERMINAL BOX	68.73
BOX2872	TERMINAL BOX	28.81
CBL4	COUNTER WEIGHT	25.52
CBL5	COUNTER BALANCE	32.85
CKS12	CRANKSHAFT	FACTORY
CKS13	CRANKSHAFT	FACTORY
CKS14	CRANKSHAFT	FACTORY
CKS15	CRANKSHAFT	FACTORY
CKS29	CRANKSHAFT	FACTORY
CKS30	CRANKSHAFT	FACTORY
CKS31	CRANKSHAFT	FACTORY
CKS32	CRANKSHAFT	FACTORY

PART NUMBER	DESCRIPTION	LIST PRICE
CKS33	CRANKSHAFT	FACTORY
CKS34	CRANKSHAFT	FACTORY
CKS35	CRANKSHAFT	FACTORY
CKS52	CRANKSHAFT	FACTORY
CKS53T1	CRANKSHAFT	FACTORY
CKS53T2	CRANKSHAFT	FACTORY
CKS56T1	CRANKSHAFT	FACTORY
CKS57	CRANKSHAFT	FACTORY
CNT104	UNL PRESS SWITCH	39.20
CNT106	CONTROL	165.39
CNT138T1	CNT-SEE BFRK1 115V	.00
CNT138T2	CNT-SEE BFRK2 230V	.00
CNT24	CONTROL	134.51
CPL102TA	COUPLING	658.29
CPL103TA	COUPLING	691.65
CPL129TA	COUPLING	594.93
CPL148T1	COUPLING	184.76
CPL34TA	COUPLING	973.88
CPL35TA	COUPLING	862.68
CPL36TA	COUPLING	1,036.68
CPL59TA	COUPLING	569.27
CPR18	CAPACITOR	30.28
CPR19	CAPACITOR	32.33
CPR20	CAPACITOR	29.07
CPR22	CAPACITOR	49.57
CPR23	CAPACITOR	77.58
COL117T1	COIL 24V	41.15
COL117T2	COIL 115V	41.15
COL117T3	COIL 208V	41.15
COL117T4	COIL 230V	39.17
COL118T1	USE COL141T1	.00
COL118T9	USE COL141T2	.00
COL141T1	COIL	33.18
COL141T2	COIL 230V	33.18
CON36	OIL COOLER CONNECTOR	12.54
COV10	HAND HOLE COVER	53.93
COV110	COVER	9.36
COV111	COVER	13.58
COV112	MOTOR END COVER	221.84
DFR1	FOAM DIFFUSER	53.37
DIS14	RETAIN DISC	6.11
ECC15	ECCENTRIC	234.73
FLG8	FLANGE	28.86
FLR16	SUCTION FILTER	8.58
FLR28	SUCTION FILTER	33.47
FLR29	FILTER	15.93
FLR31	SUCT FILTER	22.13
FLR32	SUCT FILTER	20.02
FLR34	FILTER	15.75
FLR35	FILTER	22.65
FLR38	FILTER	51.56
FLR39	FILTER	25.73
FLR40	FILTER	44.10
FUS4	FUSE 1 1/4 AMP	3.63
GA1000	CONN ROD	39.22
GA1006	SEAL	1.40
GA1010	SEE GKT379	.00
GA1011	GASKET	4.41
GA1013	PISTON WASH	.64
GA1014	PISTON RING	2.54
GA1017	OUTER THRUST WASH	2.07
GA1021	ROTOR COUNTERWEIGHT	24.07
GA1026	PISTON RING	2.07
GA1027	PISTON RING	2.07
GA1028	KEY SHAFT	1.51
GA1029	KEY SHAFT	.93
GA1030	KEY SHAFT	.80
GA1033	SEE GKT343	.00
GA1037	BEARING	20.67
GA1038	BEARING	6.53

$100.00 NET EXCHANGE CREDIT ALLOWED UPON RETURN IF HOUSING IS SALVAGEABLE.

PART NUMBER	DESCRIPTION	LIST PRICE
GA1039	GASKET	.68
GA106	GASKET	9.35
GA109	STRAINER	4.89
GA111	GASKET KIT	9.53
GA112	O RING	2.63
GA1207	TERMINAL BLOCK	6.94
GA1209	COVER GASKET	6.44
GA1210	SEE GKT340	.00
GA1228	SIGHT GLASS	3.90
GA1233	SIGHT GLASS GASKET	.71
GA1235	USE KIT334	.00
GA1289	ROTOR COUNTERWEIGHT	22.90
GA1366	SEE GKT329	.00
GA1376	TERM STRIP	4.38
GA1378	BUSHING	.71
GA1380	WASHER	.71
GA1478	GASKET	3.63
GA1518	VORTEX ELIM	11.13
GA1521	C C HEATER-240V	59.08
GA1522	C C HEATER-120V	59.08
GA1550	BEARING	6.28
GA1554	BEARING	8.14
GA1581	OIL PRESSURE REL VAL	10.39
GA1612	TEE	4.93
GA1683	RING .010	2.55
GA1693	GASKET	2.55
GA1731	SEAL ASSY	70.81
GA1966	INN THRUST WASHER	11.45
GA1967	THRUST WASHER	25.19
GA1968	OUTER THRUST WASH	13.75
GA1969	INN THRUST WASHER	10.60
GA210	SIGHT GLASS	4.59
GA211	RETAINER	4.82
GA212	FRICTION RING	.93
GA213	SIGHT GLASS GASKET	.71
GA369	GASKET	1.40
GA422	SUCT SERV VALVE	34.79
GA423	SUCT SERV VALVE	39.20
GA424	SUCT SERV VALVE	106.23
GA429	KEY SHAFT	1.78
GA430	GASKET	1.40
GA431	TEFLON GASKET	1.92
GA461T1	VALVE ADAPTER	106.85
GA461T2	SUCT VALVE ADAP	122.96
GA461T3	ADAPTER	65.24
GA462	GASKET	2.59
GA463	GASKET	2.76
GA466	ADAPTER	77.80
GA467	GASKET	.71
GB1000	SLINGER	21.12
GB1001	PISTON & PIN ASSY	28.86
GB1002	PISTON & PIN ASSY	22.81
GB1003	PISTON & PIN ASSY	26.45
GB1018T1	KLIXON	12.01
GB1018T2	KLIXON	12.01
GB1018T3	KLIXON	14.60
GB1019T1	KLIXON	42.08
GB1019T2	KLIXON	36.47
GB1042	VALVE PLATE ASSY	54.10
GB1089	HEAD GASKET	2.59
GB1090	SEE GKT375	.00
GB1091	SIGHT GLASS RET	19.00
GB1117T1	KLIXON	45.20
GB1117T2	KLIXON	43.14
GB1126T2	KLIXON	54.95
GB1126T3	KLIXON	54.95
GB1126T4	KLIXON	54.95
GB1126T5	KLIXON	54.95
GB1126T6	KLIXON	54.95
GB1127T1	KLIXON	44.71

PART NUMBER	DESCRIPTION	LIST PRICE
GB1127T2	KLIXON	44.71
GB1127T3	KLIXON	44.71
GB1127T4	KLIXON	44.71
GB1127T5	KLIXON	48.92
GB1127T6	KLIXON	59.73
GB1127T7	KLIXON	54.95
GB1127T8	PROTECTOR	51.98
GB1127T9	KLIXON	54.95
GB1128T1	KLIXON	54.95
GB1128T2	KLIXON	65.61
GB1203	SEAL ASSY	73.68
GB126T1	RELAY	20.02
GB126T3	RELAY	26.61
GB126T4	START RELAY	22.74
GB126T5	START RELAY	39.64
GB1368	PISTON & PIN ASSY	78.10
GB1369	PISTON & PIN ASSY	96.67
GB1381	OIL STRAINER	33.10
GB1473T1	KLIXON	75.87
GB1473T2	KLIXON	75.87
GB1528	PISTON	33.18
GB158	GASKET	5.34
GB160	VALVE PLATE ASY	42.19
GB171	VALVE PLATE ASY	43.32
GB191T1	RELAY	29.32
GB191T3	RELAY	40.84
GB277	COVER	5.43
GB280	CYLINDER HEAD	25.08
GB282	TERM PLATE	31.62
GB283	TERM PLATE	40.07
GB284	PISTON	63.53
GB285	TERM BOX	455.33
GB286	TERMINAL BOX	156.07
GB87	TERM ASSY	3.56
GB93	TERMINAL BLOCK	2.59
GC1000	CRANKSHAFT	403.44
GC1001	CRANKSHAFT	442.44
GC1003	HEAD RH	29.26
GC1007	HEAD LH	29.79
GC1150	HEAD GASKET	3.63
GC1151	SEE GKT377	.00
GC1156	CONN ROD	33.18
GC1162	VALVE PLATE ASSY	112.93
GC1163	SEE PLT2001A	.00
GC1344	GASKET	5.28
GC1347	GASKET	6.61
GC1348	ROD CONN	35.46
GC386	TERMINAL BOX	75.73
GD1001	BEARING HOUSING	125.58
GD1047T1	END COVER	137.67
GD1053	SEE BOX2870	.00
GD1084	SEE PLT960A	.00
GD1085	SEE PLT959A	.00
GD1086	SEE PLT963A	.00
GD1087	SEE PLT964A	.00
GD1117	CRANKSHAFT	597.31
GD1151	CRANK SHAFT	647.98
GD1189	HEAD RH	88.93
GD1190	HEAD LH	90.74
GD1191	HEAD RH	68.33
GD1192	HEAD LH	68.95
GD1194	HOUSING SEAL	266.91
GD1200	HOUSING SEAL	308.25
GD1218T1	END PLATE	243.42
GD1218T2	END COVER	254.14
GD1226	CONN ROD	86.16
GD1227	CRANKSHAFT	818.53
GKT100	GASKET	2.44
GKT105	CONDUIT COVER	4.93
GKT106	VALVE PLATE	1.40

1102

PART NUMBER	DESCRIPTION	LIST PRICE
GKT113	OIL PUMP GASKET	5.26
GKT121	HOUSING GASKET	5.68
GKT122	TERM PLATE GASKET	3.48
GKT123	HEAD GASKET RH	6.16
GKT124	VALV PLATE GASKET	7.18
GKT125	HEAD GASKET LH	7.18
GKT127	SPACER PLATE GASKET	8.27
GKT157	SPACER PLATE GASKET	8.05
GKT158	VALVE PLATE GASKET	8.05
GKT159	GASKET	1.94
GKT215	UNL VAL GASKET	2.42
GKT23	GASKET	3.14
GKT24	GASKET	5.78
GKT28	GASKET	6.14
GKT30	GASKET	6.19
GKT301	VALV PLATE GASKET	6.19
GKT309	ADAPTER GASKET	8.13
GKT312	GASKET	1.75
GKT32	SEAL GASKET	1.61
GKT327	U V GKT KIT-KS30026	36.63
GKT328	USE KIT339 KS30031	.00
GKT340	VALV GASKET	1.75
GKT341	SEAL	1.40
GKT342	BOLT SEAL WASHER	.91
GKT343	HEAD GASKET	1.75
GKT370	VALVE PLATE GASKET	1.75
GKT371	VALVE PLATE GASKET	1.75
GKT372	VALVE PLATE GASKET	1.75
GKT373	VALVE GASKET	2.44
GKT374	VALVE GASKET	1.95
GKT375	VALVE GASKET	1.87
GKT376	VALVE PLATE GASKET	3.29
GKT377	VALVE PLATE GASKET	2.59
GKT398	VALVE GASKET	1.61
GKT50	HEAD	3.20
GKT51	HEAD	3.22
GKT52	HAND HOLE COVER	5.20
GKT53	HAND HOLE COVER	7.21
GKT54	HAND HOLE COVER	5.60
GKT55	CONDUIT COVER	9.75
GKT57	STRAINER COVER PLATE	8.89
GKT58	STRAINER COVER PLATE	2.53
GKT59	STRAINER COVER PLATE	4.82
GKT60	SUCTION LINE VALVE	1.61
GKT61	SUCTION LINE VALVE	3.38
GKT62	DISC LINE VALVE	1.61
GKT63	SUCTION LINE VALVE	3.46
GKT64	SUCTION LINE VALVE	3.46
GKT65	MOTOR COVER	7.47
GKT66	MOTOR COVER	16.37
GKT67	MOTOR COVER	19.97
GKT68	BEARING HOUSING	5.16
GKT69	BEARING HOUSING	5.80
GKT70	PUMP HOUSING	4.82
GKT71	PUMP HOUSING	4.82
GKT73	VALVE PLATE	1.44
GKT74	LINER TO CRANKCASE	2.42
GKT75	LINER TO CRANKCASE	2.63
GKT76	SEAL	6.89
GKT77	SEAL	2.98
GKT79	GASKET	8.40
GKT80	UNLOADER BODY	1.40
GKT81	GASKET	.93
GKT86	GASKET	1.44
GLS2	SIGHT GLASS	50.88
GLS3	OIL SIGHT GLASS	22.05
GLS4	SIGHT GLASS	27.73
GLS6	SIGHT GLASS	45.37
HD204	CYLINDER HEAD RH	358.49
HD205	CYLINDER HEAD LH	263.09

PART NUMBER	DESCRIPTION	LIST PRICE
HD206	CYLINDER HEAD RH	263.09
HD35	CYLINDER HEAD RH	183.26
HD36	CYLINDER HEAD LH	183.26
HD37	CYLINDER HEAD RH	183.26
HD38	HEAD	277.67
HD39	CYLINDER HEAD LH	222.78
HD40	CYLINDER HEAD LH	212.13
HD93	CYL HEAD R H	108.53
HD94	CYL HEAD L H	98.68
HD97	CYL HEAD RH	137.40
HD98	CYL HEAD L H	137.40
HSG12	SEAL HOUSING DIRECT	767.02
HSG13	SEAL HOUSING DIRECT	710.41
HSG31	SEAL HOUSING	580.99
HSG32B	PUMP HSG W/BEARING	592.69
HSG6A	BEARING HOUSING W/B	546.39
HTR19	CRANKCASE HEATER 220	321.99
HTR59T1	CRANKCASE HEATER 230	59.12
HTR59T2	CRANKCASE HEATER 115	59.12
HTR60	CRANKCASE HEATER	69.88
HTR61	CRANKCASE HEATER	69.88
INN8	TERM INSULATOR	1.40
INN9	TERM INSULATOR	1.40
JMP10	TERM JUMPER	2.59
JMP9	TERM JUMPER	7.73
KEY10	KEY	.98
KIT161	TERM STUD	72.15
KIT162	TERM STUD	72.15
KIT163	TERM STUD	75.97
KIT164	TERM STUD	73.78
KIT165	TERM STUD	73.78
KIT166	TERM STUD	75.97
KIT167	UNL MANIFOLD	1,152.03
KIT168	UNL MANIFOLD	1,188.46
KIT169	UNL MANIFOLD	1,092.13
KIT180	GASKET SET	154.25
KIT190	UNL CONT KIT	394.32
KIT259	VALV REPL KIT	50.46
KIT260	VALV REPL KIT	85.19
KIT261	MOTOR KIT	FACTORY
KIT262	MOTOR KIT	FACTORY
KIT269	UNL HOLD DOWN KIT	18.23
KIT277	PROT TERM ASSY	17.55
KIT278	PWR TERM ASSY	9.56
KIT307	OIL COOL KIT R12	436.64
KIT308	OIL COOL KIT R22/502	488.87
KIT309	OIL EQUAL KIT	115.83
KIT314	KIT	63.60
KIT330	KIT OIL RETURN	145.32
KIT333	OIL EQUALIZATION	79.68
KIT334	TERM STUD	98.75
KIT335	TERM STUD	101.08
KIT336	TERM STUD	90.73
KIT337	INT UNL CONV KIT	FACTORY
KIT339	ENCL TUBE ASSY	70.65
KIT342	GASKET SET	85.43
KIT344	SEAL ASSY SEL1A	104.81
KIT346	SEE KIT260	.00
KIT353	GASKETS	22.73
KIT354	GASKETS	33.33
KIT355	GASKETS	37.08
KIT356	SUCT & DISCH VALVE K	46.15
KIT357	CONV OLD STYLE OR NO	425.60
KIT358	CONV OLD STYLE OR NO	413.35
KIT367	KIT GASKET	115.30
KIT369	KEY	3.73
KIT370	UNL CLOS P&SP	56.30
KIT372	KIT UNLOADER PST	89.72
KIT373	SUCT & DISCH VALVE K	48.55
KIT374	UNL MANIFOLD	1,046.50

1103

PART NUMBER	DESCRIPTION	LIST PRICE
LNR12	LINER NON-UNLOADED	168.75
LNR13	LINER NON-UNLOADED	278.10
LNR16	LINER UNLOADED	278.10
LNR4	LINER UNLOADED	208.98
MUF23	MUFFLER	266.36
NA8	GASKET	.68
NB3	GASKET	.85
NB4	GASKET	.85
NB45T1	PROTECTOR	15.30
NB45T2	PROTECTOR	15.57
NB45T3	PROTECTOR	15.72
NB45T4	KLIXON	16.65
NB45T5	PROTECTOR	18.76
NB45T6	KLIXON	15.04
NB45T7	KLIXON	18.75
NC54T10	CAPACITOR	27.66
NC54T11	SEE CPR17	.00
NC54T4	CAPACITOR	18.97
NUT6	SIGHT GLASS RET NUT	15.57
PAT10T1	BLUE SPRAY PAINT	12.90
PAT21T1	BEIGE SPRAY PAINT	.00
PIN21	PIN	9.41
PIN40	PIN PISTON	17.55
PIN41	PIN PISTON	14.42
PIN80	CRANK SHAFT PIN	1.40
PIN82T1	THRUST WASH ROLL PIN	1.40
PIN83T5	VALVE PLATE PIN	4.14
PIN84	UNL PIN 010 OS	8.23
PLT104A	VALVE PLATE ASSY	232.70
PLT178	ORIFICE PLATE	6.13
PLT180	ORIFICE PLATE	14.73
PLT2001A	VALVE PLATE ASSY	144.83
PLT2002A	VALVE PLT ASSY	211.27
PLT222A	TERM PLATE ASSY	297.38
PLT232	BAFFLE PLATE	33.04
PLT233	BAFFLE PLATE	33.61
PLT265	SPACER PLATE	297.38
PLT267	SPACER PLATE	362.66
PLT301A	VALV PLATE ASSY RH	356.72
PLT302A	VALV PLATE ASSY RH	339.73
PLT304A	VALV PLATE ASSY LH	330.83
PLT305A	VALVE PLATE ASSY LH	242.04
PLT310A	VALVE PLATE ASSY LH	333.48
PLT311A	VALVE PLATE ASSY LH	328.06
PLT312A	VALV PLATE ASSY LH	256.63
PLT313A	VALV PLATE ASSY LH	251.54
PLT317A	VALVE PLATE ASSY	115.62
PLT318A	SEE PLT2002A	.00
PLT322	SPACER PLATE LH	264.86
PLT503A	VALVE PLATE ASSY	375.09
PLT507A	VALV PLATE ASSY RH	599.11
PLT508A	VALV PLATE ASSY RH	566.45
PLT509A	VALV PLATE ASSY LH	404.39
PLT585A	VALV PLATE ASSY LH	480.08
PLT586A	VALV PLATE ASSY RH	488.87
PLT64A	VALVE PLATE ASY	251.94
PLT85A	VALVE PLATE ASSY	93.80
PLT959A	VALVE PLATE ASSY	128.91
PLT960A	VALVE PLATE ASSY	159.53
PLT963A	VALVE PLATE ASSY	216.88
PLT964A	VALVE PLATE ASSY	160.62
PLU23	ORIFICE PLUG	5.78
PLU5	MAGNET PIPE PLUG	3.68
PLU9	PLUG CAP CONT	46.95
PMP5A	OIL PUMP ASSY	276.90
PMP6A	OIL PUMP ASSY	439.52
PMP85A	OIL PUMP	166.22
PST100A	UNL PISTON ASSY	98.06
PST106AT1	PISTON W/PIN/RNGS	77.68
PST106T1	PISTON W/PIN	61.60

PART NUMBER	DESCRIPTION	LIST PRICE
PST16A	PISTON ASSY	54.10
PST19A	PISTON ASSY	48.73
PST21A	PISTON ASSY	62.51
PST22A	PISTON ASSY	89.86
PST25A	PISTON ASSY	38.11
PST38A	SEE ASY864	.00
PST51A	SEE ASY862	.00
PST54A	PISTON ASSY	68.41
PST57AT1	PISTON W/PIN/RNGS	80.80
PST57T1	PISTON W/PIN	44.00
PST58AT1	PISTON ASSY/PIN/RNG	65.64
PST58T1	PISTON W/PIN	62.84
PST63T1	PISTON W/PIN	81.07
PST63AT1	PISTON ASSY	93.76
PST64	SEE PST106T1	.00
PST64A	SEE PST106AT1	.00
PST65AT1	PISTON W/PIN/RNGS	159.04
PST65T1	PISTON W/PIN	122.16
PST68	PISTON	27.25
POS15	TERM POST SEE GA1377	FACTORY
RF2MB42	SEE 2MB42	.00
RF330B42	GASKET	1.55
RF500P95	SEE RF50095	.00
RF50095	VAL PLT ASY RF500P95	168.39
RF65042	SEE 650B42	.00
RF650P95	SEE RF65095	.00
RF65095	VAL PLT ASY RF650P95	178.27
RNG101T1	OIL SCRAPER RING	4.83
RNG102T1	COMPRESSION RING	2.54
RNG112	RING	2.05
RNG116	RING	2.41
RNG120	RING	2.05
RNG15	PISTON RING	5.52
RNG16	PISTON RING	5.52
RNG17	PISTON RING	5.52
RNG18	PISTON RING	3.56
RNG19	PISTON RING	5.52
RNG195A	UNL PISTON RING	39.40
RNG20	PISTON RING	5.52
RNG201A	UNL PISTON RING	39.40
RNG21	PISTON RING	5.52
RNG22	PISTON RING	5.52
RNG220	O RING 0458P37	2.29
RNG23	PISTON RING	5.52
RNG24	PISTON RING	6.28
RNG25	PISTON RING	5.52
RNG26	PISTON RING	5.52
RNG27	PISTON RING	5.52
RNG28	PISTON RING	5.52
RNG29	PISTON RING	5.52
RNG292	O RING	2.20
RNG31	RING	4.59
RNG37	COMP RING	2.37
RNG39	OIL RING	4.24
RNG45	COMP RING	3.56
RNG46	OIL RING	2.96
RNG66	OIL RETAIN RING	43.14
RNG67	OIL RETAINING RING	169.67
RNG72T1	COMPRESSION RING	2.20
RNG73T1	OIL SCRAPER RING	3.31
RNG89	RING	1.70
RNG92	RING	1.87
RTR15A	DISC RETAINER ASSY	244.34
RTR22	PISTON PIN RETAINER	4.89
RTR25	RETAINER	1.23
ROD10	PISTON ROD	72.41
ROD14	ROD UNLDR	38.96
ROD21A	CONN ROD ASSY	128.60
ROD24A	CONN ROD ASSY	200.95
ROD42A	CONN ROD ASSY	123.35

PART NUMBER	DESCRIPTION	LIST PRICE
ROD43	CONN ROD	113.58
ROD48A	CONN ROD ASSY	170.60
ROD50	CONN ROD	41.65
ROD72	CONNECTING ROD	108.37
ROD73	CONNECTING ROD	107.95
ROD74	CONNECTING ROD	122.11
ROD75	CONNECTING ROD	121.60
ROD79	CONN ROD	56.66
R2002P970	GASKET SET	20.01
R5002P970	GASKET SET	31.06
SCR121	COV SCR & NO	1.40
SCR18	SOCKET HD CAP	1.40
SCR30	SCREW	.42
SCR31	SCREW	.42
SCR69	SCREW 0533P09	.42
SEL1A	SEE KIT344	.00
SEL3A	SHAFT SEAL ASSY	140.21
SEL4A	SEAL ASSY	174.53
SEL6	SEAL OIL CONT	55.52
SET1	GASKETS COMP SET	152.81
SET10	RING SET COMP	30.25
SET11	RING SET COMP	40.46
SET12	RING SET COMP	50.37
SET13	RING SET COMP	26.80
SET14	RING SET COMP	35.70
SET16	RING SET COMP	53.51
SET17	RING SET COMP	71.40
SET18	RING SET COMP	89.21
SET19A3	HEAD GASKET SET	31.95
SET19A4	HEAD GASKET SET	37.06
SET19A5	HEAD GASKET SET	54.06
SET2	GASKETS COMP SET	183.17
SET20B3	HEAD GASKET SET	32.14
SET20B4	HEAD GASKET SET	23.28
SET20B5	HEAD GASKET SET	46.13
SET21B10	HEAD GASKET SET	71.66
SET21B6	HEAD GASKET SET	52.46
SET21B8	HEAD GASKET SET	63.95
SET3	GASKETS COMP SET	131.97
SET4	GASKETS COMP SET	85.39
SET44	GASKETS COMP SET	93.11
SET45	GASKETS COMP SET	102.15
SET46	GASKETS COMP SET	115.86
SET47	GASKETS COMP SET	120.76
SET5	GASKETS COMP SET	94.64
SET53	PISTON RING SET	7.72
SET54	PISTON RING SET	8.73
SET6	GASKETS COMP SET	106.25
SET7	GASKETS COMP SET	110.07
SET8	GASKETS COMP SET	114.48
SET9	GASKETS COMP SET	125.93
SE61742	GASKET	2.76
SE81142	GASKET	5.28
SHF11	SHAFT	273.14
SPC14	CRANKSHAFT SPACER	14.67
SPC15	CRANKSHAFT SPACER	30.95
SPG31	UNLOADER SPRING LNK	.82
SRA10	OIL CONTROL SCREEN	.60
SRA18	OIL STRAINER	75.87
SRA19C	OIL STRAINER	63.30
SRA20	SUCTION STRAINER	144.24
SRA21	SUCTION STRAINER	245.76
SRA22	SUCTION STRAINER	242.02
SRA27	SUCTION STRAINER	51.65
SRA29	USE FLR29	.00
SRA32	OIL STRAINER	46.95
SRP2	PISTON ROD	68.24
SRP3	PISTON ROD	74.14
SRP4	PISTON ROD	69.70
SRP5	PISTON CONNECT ROD	160.75

PART NUMBER	DESCRIPTION	LIST PRICE
THT3	THERMOSTAT	18.95
TMR65	TIMER	68.69
TMR66	TIMER	62.81
TUB2057T1	TUBING	20.08
TUB2058T1	TUBING	25.93
TUB2059	TUBING	18.59
TUB2060	TUBING	26.27
TUB2061	TUBING	19.71
TUB2062	TUBING	26.27
TUB2433	OIL EQUALL TUBE	25.57
VAL161	VALVE	102.31
VAL258	OIL RELIEF VALVE	14.47
VAL260	VALVE DISC	4.32
VAL357	UNL SHUTTLE VALVE	328.85
VAL361	DISC SERVICE VALVE	25.09
VAL362	DISC SERVICE VALVE	33.44
VAL363	SUCT SERVICE VALVE	28.39
VAL365	VALVE SUCT	1.40
VAL372	DISC SERVICE VALVE	77.85
VAL373	DISC SERVICE VALVE	49.80
VAL374	SUCT SERVICE VALVE	50.18
VAL381	DESUPERHEAT VALVE	236.17
VAL438	UNL SOLENOID VALVE	113.10
VAL496	FOAM CONT VALVE	10.83
VAL53	SUCTION LINE VALVE	209.52
VAL54	SUCTION LINE VAL	198.55
VAL557	DESUPERHEAT VALV R12	119.09
VAL559	DESUPERHTG VALV R220	116.65
VAL56	SUCTION LINE VALVE	448.46
VAL57	SUCTION LINE VALVE	295.63
VAL58	SUCTION LINE VALVE	424.16
VAL59	DISC LINE VALVE	132.38
VAL615	SUCT SERV VALV	38.52
VAL616	SUCT SERV VALV	40.66
VAL71	PRESSURE RELIEF VAL	37.45
VAL72	PRESSURE RELIEF VAL	67.88
VAL83	DISCH SERV VALVE	133.71
WAS20	THRUST WASHER	24.01
WAS21	THRUST WASHER	48.17
WAS22	WASHER MOTOR	20.10
WAS23	WASHER MOTOR	4.82
WAS30	SPLINE WASHER	6.83
WAS34	WAVY WASHER	1.78
WAS35	WAVY WASHER	3.56
WAS36	THRUST WASHER	17.55
WAS37	ROTOR LOCK WASHER	5.61
WAS75	WASHER	.86
WAS88	ROTOR LOCK WASHER	7.12
010P01	LOCKWASHER	.42
010P203	BRASS NUT	.53
0102G27	PIN	.42
011P09	BOLT	.53
011P10	BOLT	.53
011P11	SCREW	.42
011P13	BOLT	.53
011P17	BOLT	.53
011P19	BOLT	.53
011P29	BOLT	.53
012P11	BOLT CYL TO CRNK	.53
012P13	SCREW	.42
012P15	CAP SCR 3/8 16X1 1/2	.53
012P19	SCREW	.42
012P216	LOCKWASHER	.68
012P23	CAP SCR 3/8 16X2 1/2	.53
012P27	SCREW	.42
012P31	BOLT	.68
012P33	BOLT 3/8 16X3 3/4 LG	.85
012P37	BOLT 3/8 16X4 1/4 LG	1.47
012P43	[illegible] SCR 3/8 16X5	1.16
014P01	WASHER	.53

PART NUMBER	DESCRIPTION	LIST PRICE
014P17	CAP SCR 1/2 13X1 3/4	.68
014P29	SCR ADP 1/2 X 3 1/2	1.14
014P31	CAP SCR 1/2 13X3 1/2	1.40
016P04	LOCKWASHER	.53
016P15	BOLT 5/8 11X1 1/2 LG	.98
016P35	CAP SCR	1.27
016P47	CAP SCREW 5/8 11X5 1	2.59
0161P210	NUT LOCK SCREW	.68
0162P00	NUT	.63
017P04	WASHER	.68
0212P02	CAP-ELBOW	.63
028P07	BOX SCR & NU	.53
028P17	BOX SCR & NO	.53
034P10	SCREW-OIL PMP	.42
0341P13	SCR FLG 5/16 X 1/2	.68
0346P19	SCR VAL 1/2 X 2	1.40
035P24	OIL PLUG	.68
0386P03	TEE	4.01
0413G03	SEE CPR16	.00
0413G04	SEE CPR19	.00
0413G05	SEE CPR20	.00
0413G06	SEE CPR18	.00
0414G03	SEE CPR22	.00
0414G06	SEE CPR23	.00
0458P16	O RING SEAL HOUSING	2.59
0458P17	O RING SEAL HOUSING	2.63
0458P20	O RING-USE RNG 292	.00
0458P29	O RING	2.59
0458P34	USE 0458P35	.00
0458P35	RING	2.68
0458P37	SEE RNG220	.00
050148A1	OIL CONT ASSY ASY230	26.36
051P36	CONNECTOR	4.33
051P52	CONNECTOR	2.59
0533P09	SEE SCR69	.00
055P02	PLUG	.42
055P61	PLUG	.42
055P62	PLUG	1.40
055P70	PIPE PLUG	.68
055P71	PLUG	1.75
055P80	PLUG	1.92
0580P11	RETAINER RING	.53
0580P15	RETAINER RING	.53
0580P21	RETAINER RING	.53
0580P23	RETAINER RING	.68
0581P16	RETAINER RING	.65
0581P21	RETAINER RING	5.20
0582A05	SCREW	5.20
0609P45	VALVE	36.74
0609P55	PRES RELIEF VALVE	54.54
0609P75	DISCH PRESS REL VAL	64.66
065P05	SCREW OIL SCREEN	.68
065P29	DRIVE SCREW	.53
065016	SEE A650B16	.00
066P03	KEY LOCK SHAFT	2.04
066P03	KEY	2.04
066P18	KEY	2.12
066P29	KEY	1.36
066P30	KEY	1.53
066P58	KEY LOCK	.63
0693P00	RETAINER	.45
0693P01	RETAINER	.58
0694P00	OIL DRAIN VALV ADAP	3.73
072P01	ELBOW	2.59
072P02	ELBOW	2.66
1-10MP968	RING SET	39.77
10MA66	PIN	28.62
10MB510	BODY	4.19
10M437	SEAL	126.60
100P135	OIL DRAIN VALVE	13.06
12MP968	RING SET	56.99
125P006	THRUST BALL	1.40
1250B16	GASKET	2.15
135A75	BEARING PLUG	8.75
135A77	THRUST DIS	6.22
13579	GASKET	1.60
140A185	OIL CONT FLAPPER	4.64
140A333	OIL CHAMB PLATE	2.63
140B21	ECCENTRIC	101.59
140B22	PISTON ROD	40.87
140B42	GASKET	2.31
140C394	CYLINDER	186.78
140P06	THRUST BALL	.53
140P192	SEE VAL361	.00
140P968	RING SET	32.57
140P970	GASKET SET	10.17
2MA185	OIL CONT FLAPP	2.59
2MA195	SEE 2000195	.00
2MB150	BEAR PLUG END	26.25
2MB151	BEAR SEAL END	28.33

PART NUMBER	DESCRIPTION	LIST PRICE
2MB42	GASKET RF2MB42	1.88
2MB48	SEE 200048	.00
2MB53	NUT	29.81
2MB75	BEARING PLUG	11.60
2MB93	SEE WAS30	.00
2MB94	NUT LOCKING	6.75
2MC762	CYLINDER	414.93
2MD169	HEAD	128.83
2MP968	RING SET	42.92
2M966	BRGSET 2MB150/2MB151	57.58
20MA728	SIGHTGLASS COV PLATE	3.12
20MB87	GASKET	2.59
20M691	SEE 20000A691	.00
200P135	VALVE	16.99
2000B445	END PLATE GASKET	1.40
20000A691	SIGHTGLASS GKT20M691	.53
2000195	PLATE COVER 2MA195	11.11
2000437	SEAL	83.53
200048	GASKET 2MB48	1.62
200079	GASKET	1.78
2001A428	GASKET OIL SCREEN	.68
2001A612	SIGHTGLASS	7.84
2001A613	SIGHTGLASS	2.68
2002P971	BEARING PLUG	20.06
25P135	VALVE	10.76
330A16	GASKET CRNK TO CYL	2.62
330B437	SEAL ASSY	81.92
330B458	SHAFT	173.50
330B48	GASKET	.59
330B50	HEAD	36.73
330B82	GASKET	.64
330C394	CYLINDER	269.44
330P192	SEE VAL362	.00
330P874	OIL RING	4.59
330P876	RING	3.63
330P968	RING SET	23.56
330P970	GASKET SET	11.70
330445	GASKET	1.40
40MA613	GASKET	2.29
40MA691	GASKET	2.44
40MA78	GASKET	6.83
40MC16	GASKET	7.34
40M437	SEAL ASY	225.05
40M48	GASKET	8.75
40M966	BRSET40MA150/40MA151	391.86
40M970	GASKET SET	96.69
500A75	BEARING PLUG	15.12
500B16	GASKET	1.75
500B437	SEAL ASSY	75.05
500B458	SHAFT	68.38
500B48	GASKET	2.76
500C394M	CYLINDER	183.51
500P875	RING	6.30
500P968	RING SET	34.90
500P970	GASKET SET	20.06
5000B445	GASKET SEAL ASSY	3.14
500082	GASKET	.85
500187	SUCTION SCREEN	5.26
5002A397	SUCTION SCREEN	15.82
5002A488	PLATE COVER	17.46
5002A66	PIN	11.11
5002P874	RING	7.75
5002P875	RING	7.75
5002P876	RING	7.75
50079	GASKET	5.34
5301B48	GASKET	3.22
650B150	BEARING	35.45
650B151	BEAR SEAL END	15.08
650B42	GKT CYL/VLPL RF65042	1.55
650B48	GASKET	3.82
650B53	LOCK NUT ECCENTRICP	13.91
650B93	SPLINE WASHER	4.72
650B94	LOCK NUT ECCENTRIC	6.11
650C04	SHAFT	281.58
650C21	ECCENTRIC	142.90
650C50	HEAD	93.33
650P875	RING	3.29
650P966	BRSET650B150/650B151	68.77
650P968	RING SET	31.08
650P970	GASKET SET	12.04
650437	SEAL ASSY	72.50

Exhibit H-5

FORM NO. 4130C
SUPERSEDES
FORM 4130B

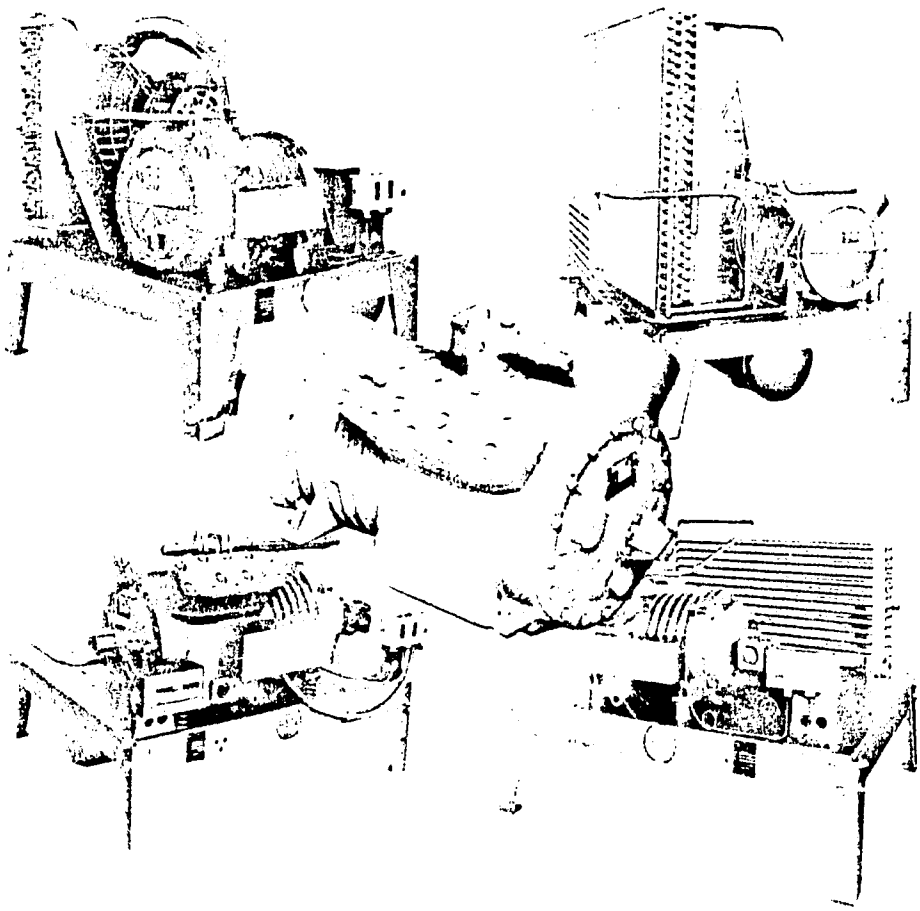

DUNHAM-BUSH

D/B METIC COMPRESSOR AND CONDENSING UNITS

Installation, Operation and Maintenance Instructions

1107

D/B METIC SEMI-HERMETIC COMPRESSORS

TYPICAL 2 CYLINDER FRACTIONAL
1/2 HP THRU 1 HP

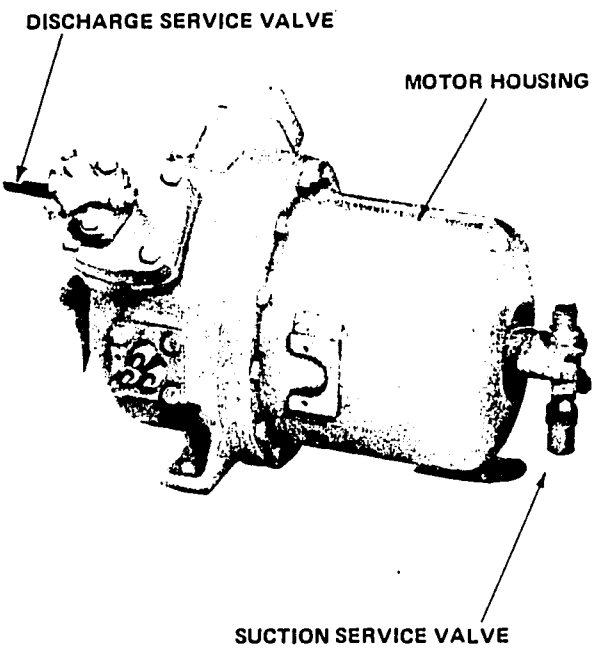

TYPICAL 2 CYLINDER INTEGRAL
1-1/2 HP THRU 3 HP

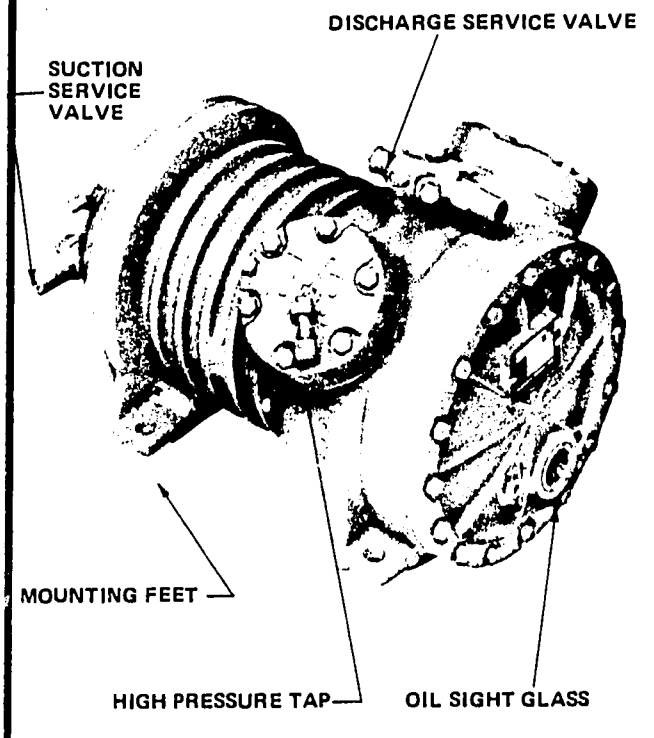

TYPICAL 3 & 4 CYLINDER
3 HP THRU 10 HP

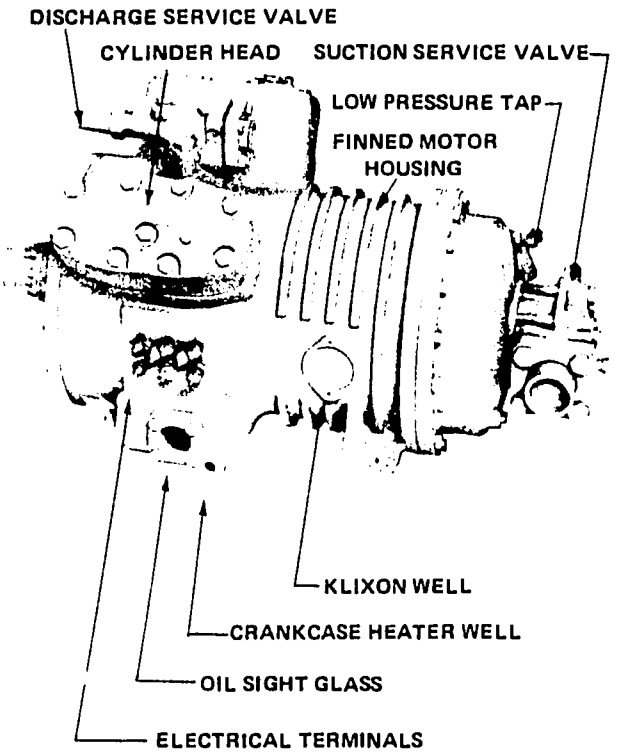

TYPICAL 6 CYLINDER
7-1/2 HP THRU 20 HP

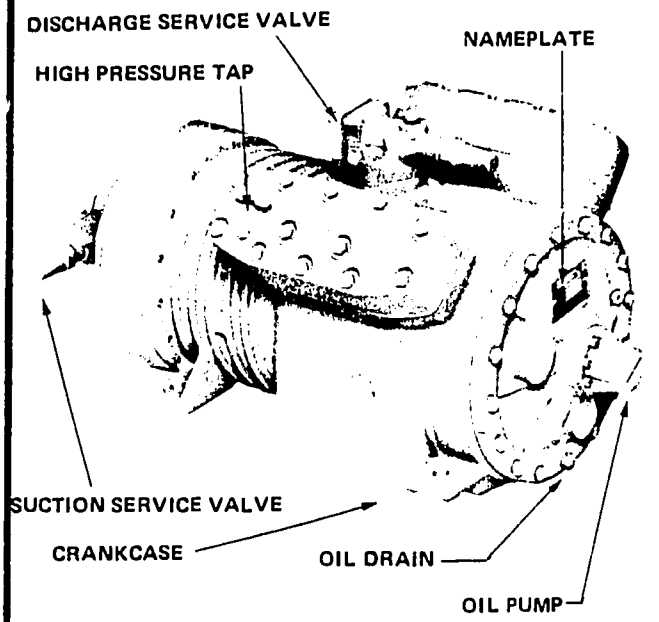

1102

D/B METIC COMPRESSORS AND CONDENSING UNITS

TYPICAL 'EH' COMPRESSOR UNIT

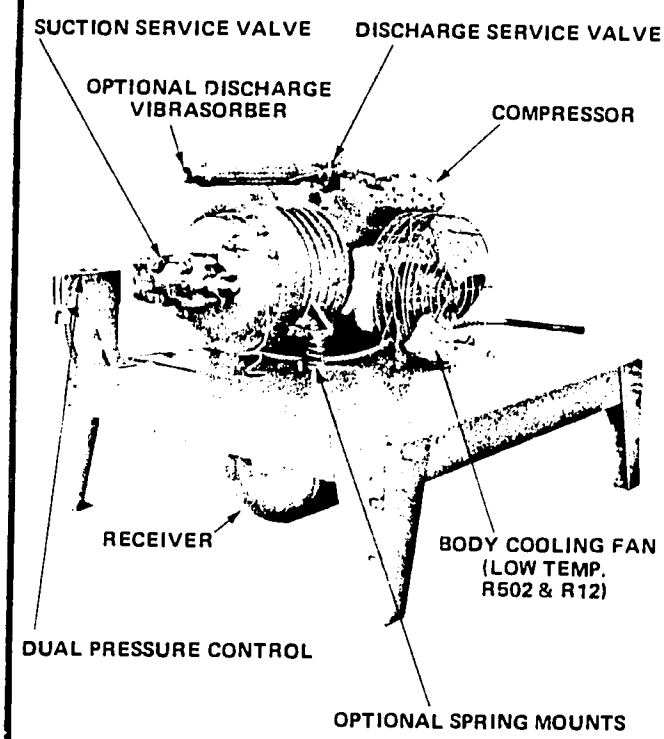

TYPICAL 'WH' CONDENSING UNIT

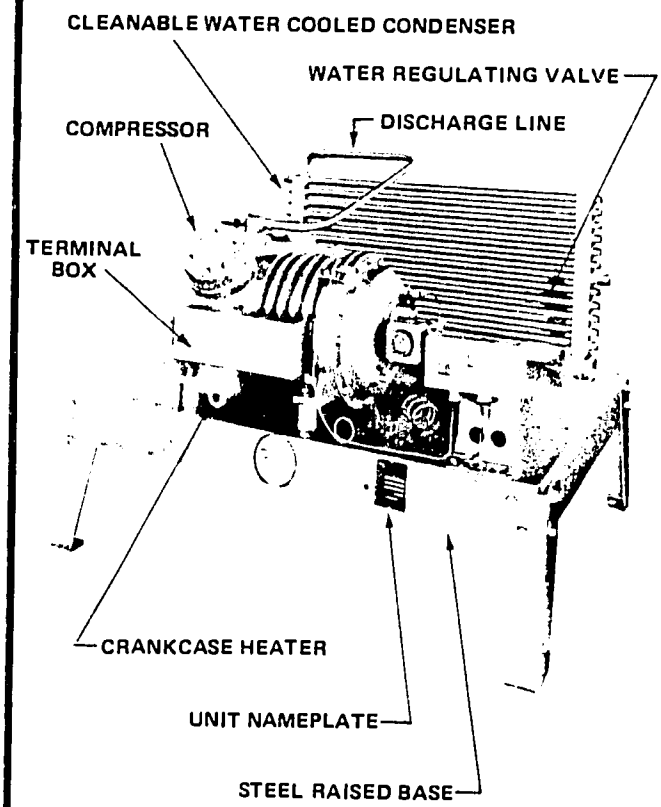

TYPICAL 'AH' CONDENSING UNIT

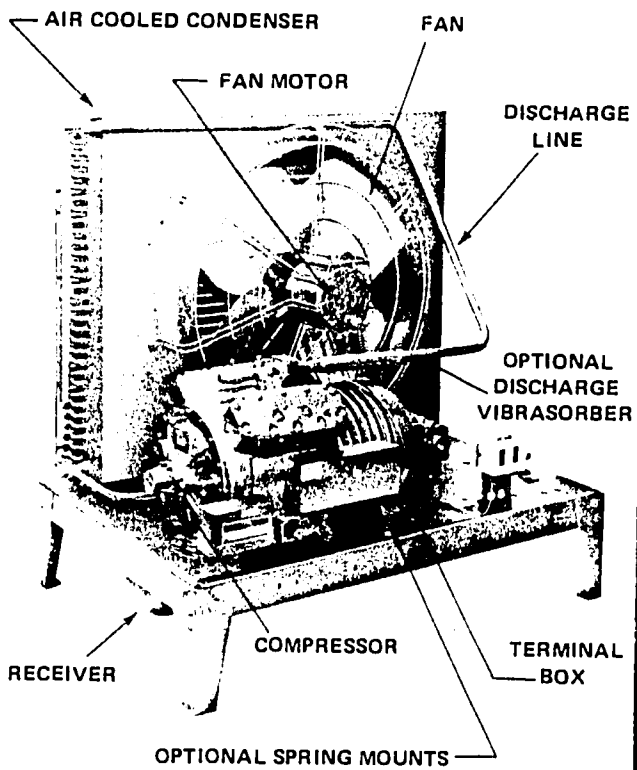

TYPICAL 'AWH' CONDENSING UNIT

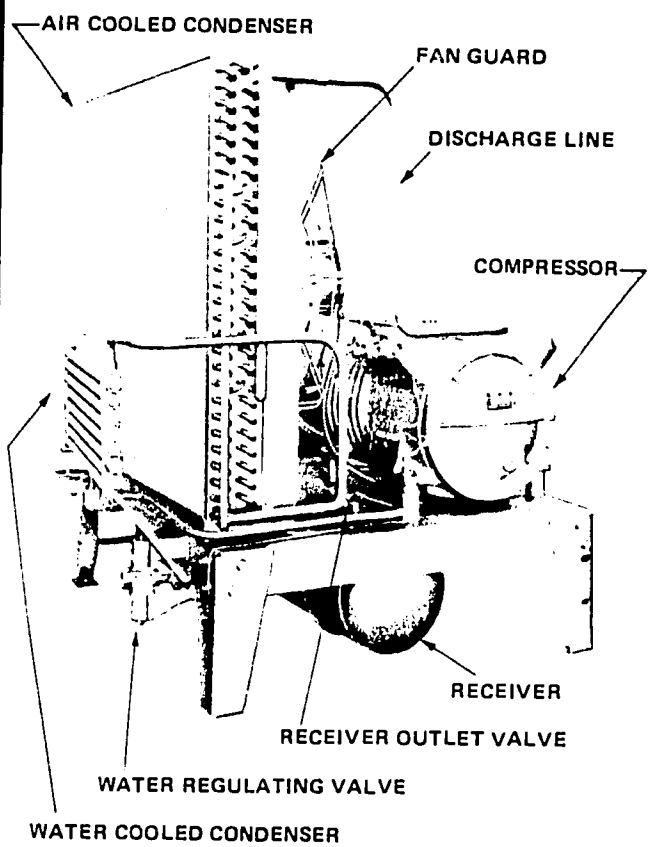

INDEX

PAGE

I. GENERAL INFORMATION

A. Identification of Unit 1
B. Nomenclature 2
C. Type of Identification 2
D. Compressor Serial Numbering System 2

II. APPLICATION

A. General Instructions 3
B. Approved Refrigerants 3
C. Operating Limits 3
D. Selection of Condensing Units 3
E. Type of Condensing Units 3-4
F. Winter Operation 4

III. INSTALLATION

A. Inspection 4
B. Locating the Unit 4
C. Foundation 5
D. Vibration Isolation 5
E. Piping Connections 5-6
F. Evaculation 6
G. Charging the System 6-7
H. Electrical Wiring 7
J. Control Settings 7
K. Four Conditions Necessary 7

IV. OPERATION

A. How to Start a New Installation 8
B. Normal Operation 8
C. Operation of Components 9-11

PAGE

V. MAINTENANCE

A. Periodic Inspection 12
B. Lubricants 12
C. Condenser Fan Motor 12
D. Valve Plates 12-13
E. How to Replace a Burned Out Motor-Compressor 13
F. Index - Terminal Box Wiring Diagrams - 60 Hertz 14
G. Index - Terminal Box Wiring Diagrams - 50 Hertz 15
Terminal Box Wiring Diagrams 15-19

VI. TROUBLE SHOOTING

A. Test Equipment 20
B. Line Voltage 20
C. Starting Capacitor 20
D. Compressor Motor (single phase) 20
E. Starting Relay (voltage type) 20
F. Relay Interchangeability 20
G. External Overload Protector 21
H. Oil Pressure Switch 21
J. General Check List 21
K. Liquid Injection 22

VII. WARRANTIES

A. Inoperative Motor - Compressor 23
B. Straight Motor - Compressor Sale 23
C. Voiding of Warranty 23-24
D. Your D/B-Metic Warranty 24

I. GENERAL INFORMATION

A. IDENTIFICATION OF UNIT

When corresponding in connection with your unit and always when requesting parts for exchange under the D/B-Metic Standard One Year Warranty, you must furnish Condensing Unit Model, Type and Serial Numbers and Compressor Model, Type and Serial Numbers.

No exchanges under the warranty can be made by an Authorized Wholesale Parts supplier without this information.

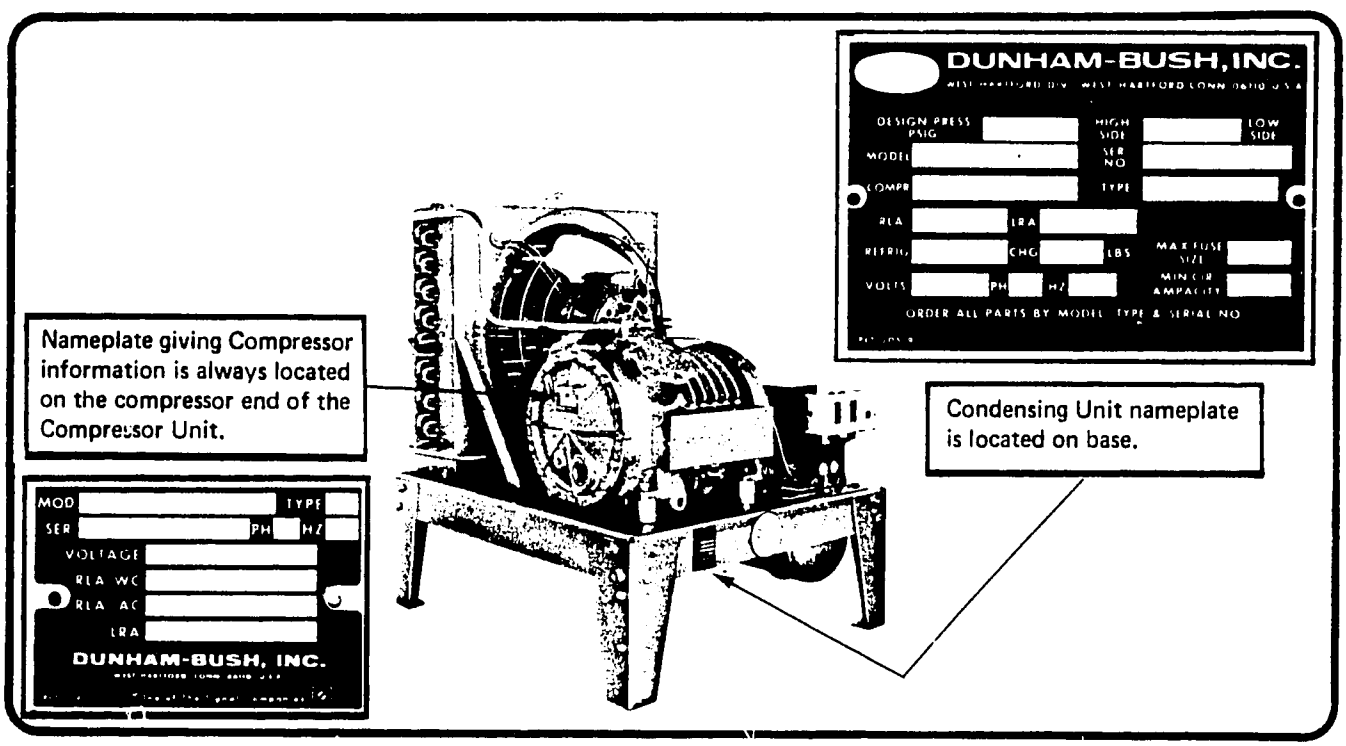

I. GENERAL INFORMATION

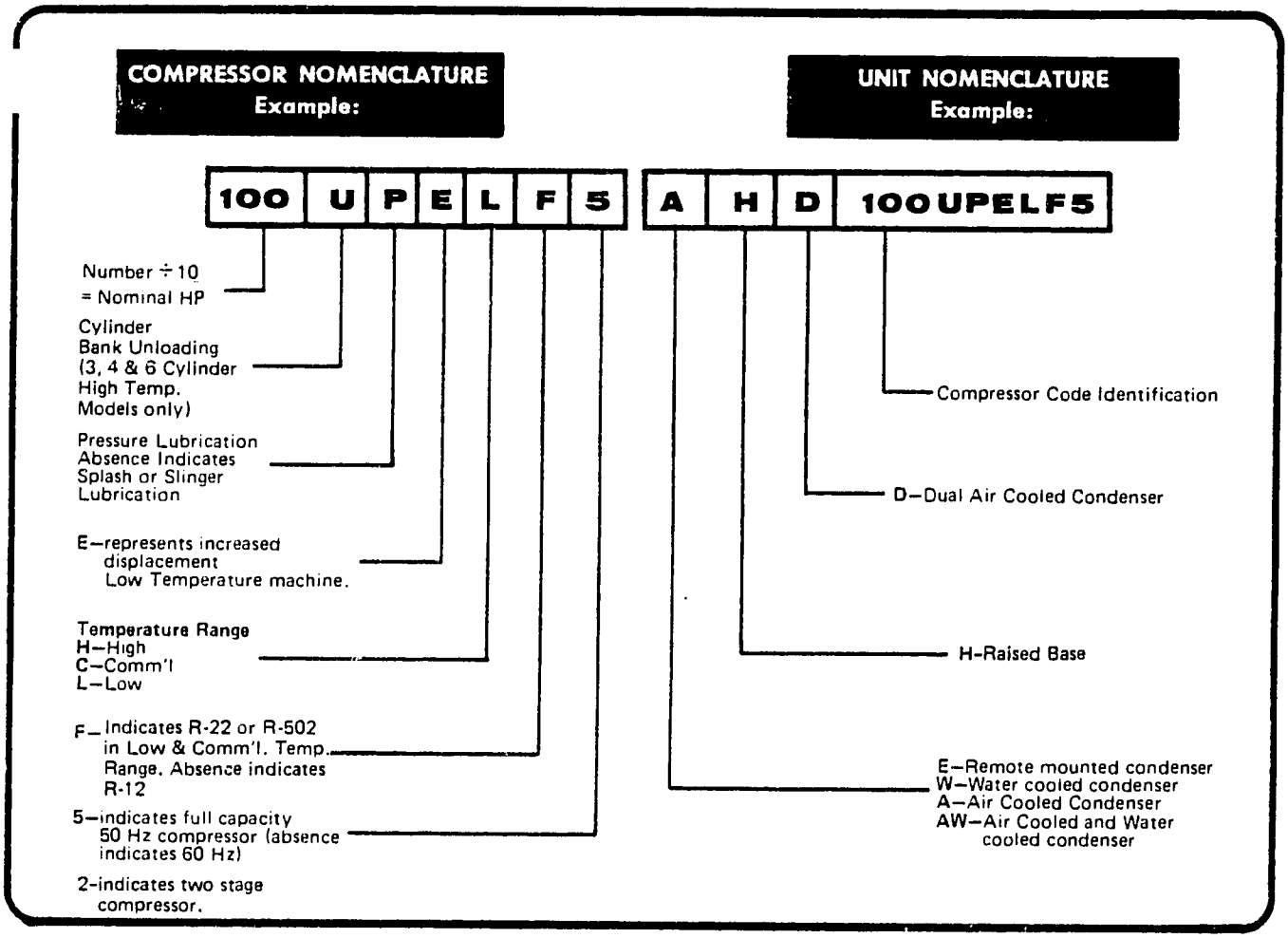

B. NOMENCLATURE

D/B-Metic motor-compressors and condensing units are identified by model numbers and each letter and figure in the model number has a significance in the identification of the part.

Figures indicate horsepower motor used in motor-compressors.* The first group of figures indicate horsepower motor used in motor-compressors. Nominal HP is figure divided by 10. There are exceptions such as the 17½ HP model. The following table matches figures to HP's:

FIGURE	NOMINAL HP	FIGURE	NOMINAL HP
5	½	15	1½
9	¾	20, 22	2
10	1	30, 32, 41	3
11	1	50, 51, 52, 61, 52	5
These 2 cylinder compressors are described as "fractional".		75, 76, 77	7½
		100, 101, 104, 111	10
		151, 154	15
		201	17½
		204	20
		These 2, 3, 4 & 6 cylinder compressors are described as "integral"	

*Horsepower designations 9 and 11 etc. are not intended to be interpreted as being any more "Heavy Duty" than 7 (discontinued) or 10 etc., but are so numbered to avoid duplication of model numbers.

The letter(s) following figures on the Condensing Unit nameplate or the Motor-Compressor nameplate indicate temperature range, unloading, oil pump and refrigerant type etc. Additional figures indicate 2-stage or 50 Hertz compressor.

On some D/B-Metic Motor-Compressors, letters following numbers will be divided by one or two slant (/) lines (as H/CF/LF or H/LF) indicating that compressor is suitable for several applications.

C. TYPE IDENTIFICATION

In addition to the model number, each compressor and condensing unit has a letter identifying its type. This type letter which appears on the nameplate of both the motor-compressor and the condensing unit will change whenever there is a major change in the design of the compressor or condensing unit, that would require positive identification in selecting the proper replacement parts. The type identification, as listed on the motor-compressor, will seldom be the same as the type shown on the condensing unit nameplate since the type letter on the motor-compressor identifies only the design changes in the motor-compressor, whereas the type letter on the condensing unit plate identifies those changes in the condensing unit.

D. D/B METIC COMPRESSOR SERIAL NUMBERING SYSTEM

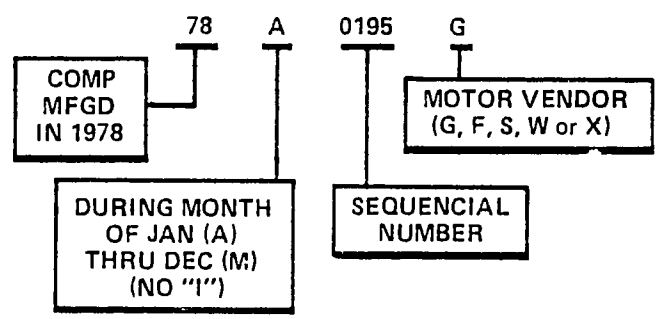

II. APPLICATION

A. GENERAL INSTRUCTIONS

The main purpose of this manual is to point out necessary installation and start-up requirements and to guide the serviceman in the correct diagnosis of troubles, permitting him to get the system back into operation with a minimum of delay and expense. Another purpose is to minimize the chances of returning to the factory, a unit or compressor which could be corrected in the field by the replacement of an accessible part.

B. APPROVED REFRIGERANTS

Only refrigerants R-12, R-22 and R-502 are approved for use in D/B Metic compressors.

For applications involving other refrigerants - consult factory.

C. OPERATING LIMITS

The temperature ranges of D/B-Metic (model numbers ending in H, C and L) have operating limits as follows:

REFRIGERANT	COMPRESSOR OPERATING RANGE	SATURATED SUCTION TEMP. (°F)	SATURATED DISCHARGE TEMP. (°F)
R-12	(H) High	0 thru 55	145
	(C) Commercial	-5 thru 30	135
	(L) Low	-40 thru 0	135
R-22	(HF) High	0 thru 55	145
	(CF) Commercial	0 thru 25	145
	(ELF) (LF) Low	-40 thru 0	135
R-502	(HF) Commercial	-5 thru 30	135
	(ELF) (LF) Low	-40 thru 0	135

The limits may be exceeded slightly during short pull-downs etc., or when head pressure is kept very low.

CAUTION: All low temperature units are in danger of overheating the discharge gas. This is particularly true of the R-22 units.

The maximum permissible discharge gas temperature as measured on the discharge line one foot from the discharge service valve is 270°F. Discharge temperature is a function of the suction pressure, discharge pressure and suction superheat. Lowering the discharge pressure or suction superheat lowers discharge temperature. Raising the suction pressure lowers the theoretical discharge temperature, but may not lower the temperature as measured. Therefore, it is recommended that the suction lines of all low and commercial temperature compressors be insulated. This will result in a cooler, more trouble-free installation, with lower power cost.

To maintain reasonable discharge temperatures, liquid injection is usually applied to R-22 low temperature applications while compressor body cooling fans are used on R-12 and R-502 applications where there is no available air circulation over the compressor.

A detailed description of the liquid injection system is given on page 10.

D. SELECTION OF CONDENSING UNITS

It is important that a condensing unit of the proper size and loading point (temperature range) be selected. In making this selection, the following should be taken into consideration:

1. The capacity needed to handle total application load without excess running time or overload when ambient temperatures or water temperatures are at their peak.
2. Selection of type of unit (air cooled or water cooled).
3. Refrigerant temperature range at which the condensing unit will be operated.
4. Running time desirable.
5. Availability of electrical source of supply at location.

E. TYPES OF CONDENSING UNITS

1. **WH - Water-Cooled Units** - are supplied with 'CIC' cleanable Innerfin water cooled condensers. The entire water circuit is constructed of non-ferrous materials. Water regulating valves, which are supplied as standard, maintain a constant head pressure by admitting more water flow as head pressure rises, and throttling water flow as head pressure decreases. Standard 'WH' units have city water valves and racked 'WH' units have tower water valves (unless otherwise specified). Valves smaller than 1" are factory mounted and piped; valves 1" and larger are furnished unmounted.

   Units are available upon special order, with 'MCIC' marine condensers with water tubes and headers made of cupronickel for applications using sea or brackish water as a coolant. Marine units will require special water regulating valves.

   For winter operation water cooled condensers should not be exposed to ambient temperatures below 32°F. If the water in the condenser freezes, tube failure may result because of expansion of the frozen water. If the refrigeration unit is shut down during the winter months and there is a possibility of the condenser being exposed to temperatures below 32°F, the water in the condenser msut be drained.

   Some low freezing point "brines" are suitable for use with 'CIC' condensers. The capacity of the unit may have to be derated, or a larger condenser used to maintain capacity. Consult Application Engineering.

   Units piped for city water require a flow rate based upon a nominal 10°F water temperature rise; units piped for tower water require a flow rate based upon a nominal 20°F water temperature rise.

2. **AWH - Combination Air and Water Cooled Units** - are used where short periods of abnormally high ambient conditions exist and water supply is minimal. When the unit incurs elevated ambient temperatures, and the condensing temperature rises, the discharge pressure actuated water regulating valve will gradually open, providing water to the 'CIC' condenser, thus maintaining the condensing pressure in the desired range.

   The unit is primarily air cooled, with the 'CIC' serving as a supplemental condenser. The 'CIC' cannot handle the total condensing load by itself.

3. **AH - Air Cooled Units** - with standard components will operate satisfactorily in ambient air temperatures ranging from 45°F to 100°F. Below 45°F the optional head pressure control is required. Above 100°F an optional oversize air cooled condenser is required.

   The standard aluminum fin, copper tube materials may not be satisfactory for use in corrosive atmospheres such as salt air or industrial. All copper construction or inert coatings are available - Consult Application Dept.

II. APPLICATION

4. **EH - Compressor-Receiver Units** - are designed for applications where the condenser must be remotely mounted and/or a series of units must be connected into one common multi-circuited condenser. Some systems may require optional oversized receivers, depending on length of refrigerant runs, size of evaporators and condensers, and types of head pressure control.

F. **WINTER OPERATION (Air Cooled Unit Outside or in Unheated Area)**

If the condensing unit is installed where air temperatures may drop to below 45°F, it is very important that suitable controls be used to assure the proper operation of the unit at low ambient temperatures. If the temperature in which an air cooled condensing unit is located drops to below 45°F, the head pressure will probably be so low that the pressure differential across the expansion valve will not be sufficient to feed the evaporator, and, consequently, the unit would not start if it is operating on a pressure control. To function properly a head pressure control is required. It is optional on Dunham-Bush factory assembled units, and is recommended for field built systems. A description of a typical installation follows:

Figure A illustrates a typical installation schematic. During normal ambient conditions, refrigerant liquid from the condenser enters port "2" and leaves through port "3" to the liquid receiver. When the receiver pressure drops below the valve setting, the valve modulates to permit discharge gas to enter port "1". See Figure B. Metering discharge gas into the liquid produces a higher pressure at the condenser outlet, thus reducing the flow and allowing a level of condensed liquid to rise in the condenser. This flooding of the condenser with liquid reduces the available condenser surface. The result is to increase the operating temperature difference and produce a minimum required condensing temperature.

1. **Heated and Insulated Receiver**

If the receiver is to be installed outdoors, optional electric heat on the receiver is required to maintain receiver pressure during the off-cycle for most commercial refrigeration installations. Heaters are inserted in heater wells and are controlled by a high limit thermostat.

2. **Crankcase Heaters**

Crankcase heaters are now supplied as standard on all D-B Metic compressors and units. Heater is 100 Watt cartridge type, supplied only in 115V or 230V. A relay for control is a recommended option on low temperature machines. The relay is normally closed type and must be wired in parallel with the compressor motor starter holding coil. Another method of interlocking the crankcase heater is to use a normally closed auxiliary starter contact. The heater must be wired with its own fused disconnect so that power is available at all times. High and commercial machines do not require a relay. (See wiring diagram shipped with unit or in latest edition of catalog 4030.) The heater must be energized at least 24 hours prior to initial (or seasonal) start-up to vaporize any liquid refrigerant that may have migrated to the crankcase.

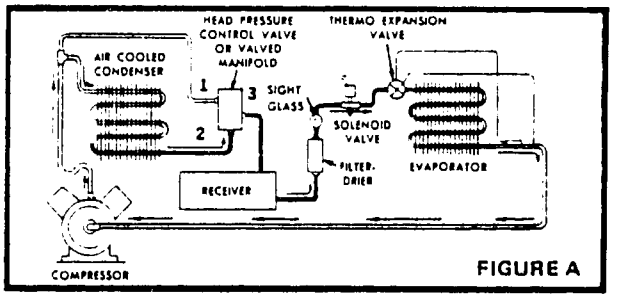

FIGURE A

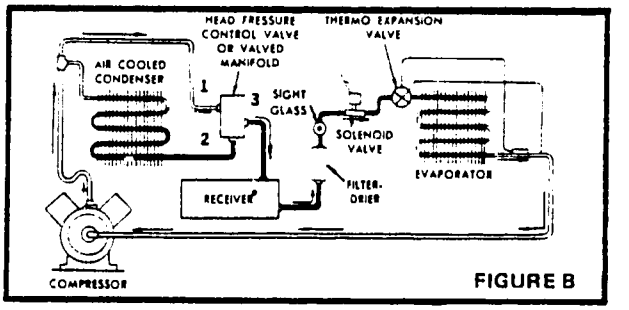

FIGURE B

III. INSTALLATION

A. INSPECTION

When the unit is delivered, make an immediate inspection in the presence of the carrier's representative for damage in shipment, be sure to open all cartons to expose any hidden damage. If any damage is found, a notation should be made on the delivery receipt before signing. A claim should be filed immediately against the delivering carrier. **It is the carrier's responsibility to pay for any shipping damages.**

The unit should also be checked against the order at this time to be sure it is complete and has not been mis-shipped.

Save all tags, instructions and shipping receipts. Since they may be needed for reference, these should be turned over to the person responsible for starting the equipment.

B. LOCATING THE UNIT

Every precaution should be used to prevent damage to the unit when moving it to its permanent location. Leave enough room around the compressor so that it can be easily serviced. In locating the unit, allow room for cleaning the water cooled condenser tubes, which should be the length of the condenser, unless built up cleaning rods are planned to be used. Note that on WH and AWH units the CIC water cooled condenser is mounted at a slight angle to permit condenser cleaning when units are mounted side-by-side.

When necessary to locate a unit above the evaporator, special care should be taken to install a trap at the base of the suction line and in sizing the suction line to assure the return of the oil, which is circulating in the system, to the compressor.

CAUTION

1. Do not install condensing unit near heater, furnace or other heat sources such as large open motors.
2. Do not restrict air circulation by backing air cooled condenser against wall, or against another air cooled condenser.

C. FOUNDATION

This equipment requires no special foundation and can be installed directly onto the floor or other structually sound location. Location bolts can be used but are not required as the unit will not creep or move. The unit must be leveled for proper operation of controls. Before making any piping or electrical connections be sure that all shipping blocks, straps, etc. are removed to prevent any misalignment which might result.

D. VIBRATION ISOLATION

If a minimum of vibration (and sound) transmission is an important consideration, either of the two following methods is recommended:

1. **Unit Isolation:** Rubber-in-shear isolators under the mounting legs of the base. These isolators must be designed for the operating weight of the unit. Consult Application Department for selection and price. Any condenser water connection must be made with flexible hose, suitable for the system water pressure. Any refrigerant line connections (suction, discharge or liquid) to the system must be flexible type ("Vibrasorbers"). Pricing may be found in the latest edition of 4630-7. Remember to allow some slack in the electrical lines when making power connections.
2. **Compressor Isolation:** Compressors may be isolated by using suction and discharge vibrasorbers in conjunction with springs under the compressor. Units are available with the compressor factory mounted on springs - consult latest edition of catalog 4030 for description and accessory price sheet 4630-7.

E. PIPING CONNECTIONS

1. Refrigerant Piping

All refrigeration piping practices when installing these condensing units are to be in accordance with local codes and the latest standard B9 safety code. Pipe sizing should be in accordance with the latest ASHRAE and/or ARI standards. To insure trouble-free operation the following conditions should be observed.

a. Do not connect this carefully dehydrated unit to tubing and evaporator which has not been dehydrated, or to an old system which may be dirty or moist and has not been thoroughly cleaned and dried out.

b. Valves are to be disassembled, or wrapped in wet cloth to prevent damage to the valves by heat. To prevent formation of copper oxide on the inside of the copper tubing, nitrogen or inert gas must be passed through the piping continuously while soldering joints.

c. Moisture in a refrigeration system is one of the main causes of trouble, particularly to the compressor, resulting in the formation of acids which attack the motor insulation, the valves and valve plates.

This contamination can be explained by two entirely different types of oil decomposition. The first type, reaction of the oil with oxygen in the noncondensables, usually is the first to take place. Even though the system is dry, at high head temperatures with noncondensables present, oil breakdown products, due to reaction of the oil with oxygen, will start building up on the valve plate and particularly on the seat of the discharge valve. In time, this can lead to wire drawing (forcing of the gas through a small leak on the discharge valve creating very high temperatures), and initiate the second type of oil breakdown which involves the oil reacting directly with the refrigerant to form hydrochloric acid, hydrofluoric acid, carbon and water. This becomes a vicious cycle, snowballing until the system has a serious wet acidic condition, oil deterioration, and eventually a motor burnout.

Extreme precautionary measures are taken at the factory to insure that the condensing unit or motor compressor is clean and properly dehydrated. Equal care should be taken at the time of installation to be sure that the system is as clean and dry as possible. An additional safeguard should be the use of a drier of the proper size on all installations.

d. The use of a moisture indicator is also recommended in that it allows for quick visible checking of the moisture content of the refrigerant. Indicators are available with a sight glass that contains a porous filter paper impregnated with a chemical to change color according to the moisture content.

Dunham-Bush has available at optional cost a liquid line assembly consisting of filter-drier, moisture indicating sight glass, and shut off valve. The assembly is conveniently mounted on the front of the base of condensing units. Refer to the D/B-Metic catalog Form No. 4030 for selection.

e. Suction lines have a great impact on the ability of a unit to run trouble free. Improperly piped they can cause slugging, oil dilution and lubrication failure which results in the breakdown of the compressor.

The minimum safeguard for any unit would be to trap the evaporator suction line and then pitch it downward to the compressor. The recommended and most effective safeguard for the unit would be to incorporate an automatic pump down control into the system.

The automatic pump down control evacuates the evaporator when refrigeration is not required. It requires a thermostat sensing the temperature in the area being refrigerated and electrically interlocked with the compressor safety controls, to operate a solenoid located in the liquid line to the evaporator. The evaporator cycles on the thermostat. The compressor has a low pressure switch in its control circuit which senses the suction pressure. Changes in pressure will cause the compressor to cycle on and off.

The combination of proper sizing and piping of the suction line, automatic pump down, and careful assembly will help to prevent maintenance calls.

2. **Water Piping**

a. General

After the unit has been leveled, the external water piping to the condenser may be made up. Air vent valves should be installed at all high points to bleed the system of entrapped air. Drain valves or plugs should be installed at all low points to drain the system. For information regarding piping of 'CIC' condensers and water regulating valve, refer to the latest revision of Form 8140.

After the unit has been piped:

1. Open all valves which have been installed.
2. Purge all the air from the system to be sure it is not airbound.

b. **Water Regulating Valve**

If a water regulating valve is used on the condenser, it should be adjusted to maintain the required condensing temperature, as soon as possible after start-up.

c. **Water Treatment**

If condenser water is recirculated, a water treatment agent should be placed in the water. There is practically no water that is entirely free from mineral salts and solutions. These salts leave deposits on the condenser tubes and thus reduce their capacity resulting in higher condensing pressures.

For proper operation of this system, the water should be tested by a local testing agency and their recommendations for treatment adhered to. Failure to do so may affect the warranty.

Any unit damage resulting from incorrect or insufficient water treatment will void all warranties.

F. EVACUATION

When all refrigeration connections have been made a leak test and evacuation should be performed on the unit.

A small, portable vacuum pump should be used to evacuate the system (evaporator coil, drier, lines, etc.) after the condensing unit has been installed in the system. **Do not use the compressor as a vacuum pump.**

Use a vacuum pump that is built for refrigeration evacuation. See your D/B-Metic wholesaler for this equipment. There are many excellent vacuum pumps on the market.

If the system is properly evacuated, using a good vacuum pump which can pull down into the 50 to 100 MICRON RANGE, the noncondensables are eliminated before the system is ever started.

A good vacuum pump with electronic gauge is desirable, and highly recommended for this procedure. Actually a 25" to 28" vacuum is similar to running on a tread mill as no great amount of dehydration or removal of noncondensables results. The gauge may be showing 50 microns at the pump, but if a large system is being evacuated, the vacuum level at the end of the system may be too high. The poorer the vacuum, the poorer the results.

This situation should not be further complicated by using too small a connecting line between the vacuum pump and the system as it will create a high pressure drop which will greatly reduce the efficiency of the vacuum pump. To use the vacuum pump most efficiently a triple evacuation method should be used. This involves pulling the system down to 100 microns and holding it for a period of three to four hours and then breaking the vacuum with dry refrigerant if it is a small system, or with nitrogen if it is a larger system. The vacuum is again pulled for a period of time, again broken with dry nitrogen and a third vacuum again pulled and broken with the type of refrigerant to be used in the system. At this point the system can be charged, and you can be assured that virtually all of the noncondensables have been removed.

Triple evacuation works on the principle of pulling out a high percentage of the noncondensables and/or water on each pull-down. As an example, suppose 90% of the noncondensables are removed on the first pull-down. This would leave 10%, of which 90% is removed on the second pull-down, leaving only 1%, and 90% of the remainder would be removed on the third pull-down leaving only 1/10 of 1% of the original noncondensables in the system. In addition, breaking the vacuum with dry nitrogen or dry refrigerant has a diluting effect on moisture and also prevents recondensation of the moisture which has been vaporized.

Besides being sure that the connecting line between the vacuum pump and the refrigeration system is sufficiently large enough to prevent pressure drop, there are three precautions to be kept in mind.

FIRST — An ordinary compound gauge is worthless on a good vacuum pump. The error in the gauge is greater than the amount of vacuum being measured. It is absolutely necessary to use a true micron gauge. There are several very good electronic gauges on the market which are rugged and have a dial on which microns can be read very similarly to the reading of an ammeter.

SECOND — Be sure the system, including the factory piping of the unit, is good and tight and has been checked for the slightest leak. (See How To Start A New Installation, Page 8).

A good vacuum pump will stay ahead of a small leak and it simply means pulling air and moisture in one end and pushing it out the other.

THIRD — It also should be remembered that water trapped under layers of oil will stay there regardless of the vacuum pulled and will not be dislodged until the circulating refrigerant takes the oil up and releases the water.

If any leaks are found, make repairs. A Halide torch, soap bubbles, or electronic detector may be used for leak detection.

G. CHARGING THE SYSTEM

1. As all units are shipped with only a dry gas holding charge they must be fully charged with refrigerant for which they were designed. The type of refrigerant to be used is specified on the nameplate of the unit. When charging a unit you must use a clean and dry refrigerant. This is especially important when charging a low temperature system.

G. CHARGING THE SYSTEM - CONTINUED

2. Open all discharge, suction and liquid line valves, connect the charging hose to the back seating port of the suction valve. Be sure to purge the hose of all air. Move the valve off its back seat to allow refrigerant gas to enter the system. Start the compressor, continue adding refrigerant until all the bubbles have disappeared from the sight glass. In some instances a charging valve may be provided in the liquid line, then the unit may be charged with liquid refrigerant and "topped off" by charging with gas refrigerant as described above.
3. On air cooled units with condenser flooding devices, for head pressure control, additional refrigerant must be charged into the system (chart below indicates volume and weight for 100% condenser flooding).
4. After the unit is charged and has been running for a short period of time check the indicator for moisture and change the filter drier if necessary.

REFRIGERANT VOLUMES & WEIGHTS
AIR COOLED CONDENSERS FOR AH & AWH UNITS

MODEL	TONS	Cu. In.	R12	R22	R502
CDS 332	1½	115	5.0#	4.6#	4.7#
CDS 333	2	153	6.7#	6.1#	6.2#
CDS 334	3	167	7.3#	6.7#	6.8#
CDS 335	5	334	14.7#	13.3#	13.5#
CDS 336	7½	516	22.7#	20.6#	20.9#
CDS 337	10	774	34.0#	30.9#	31.4#

H. ELECTRICAL WIRING

ALLOWABLE TOLERANCE IN OPERATING VOLTAGE AT THE COMPRESSOR TERMINALS
D-B-METIC

COMPRESSOR NAMEPLATE V/ϕ/HZ.	VOLTAGE TOLERANCE
208/1/60	±10%
230/1/60	±10%
208/3/60	+15%, -10%
220/3/50	±15%
230/3/50 or 60	±15%
380/3/60	±15%
400/3/50	±15%
460/3/60	±15%
500/3/50	±15%
575/3/60	±15%[7]

APPLICATION OF STANDARD VOLTAGE MOTORS:
D-B-METIC - 60 HERTZ

COMPRESSOR NAMEPLATE VOLTAGE	MAY BE USED WITH SUPPLY VOLTAGE
208V	200V or 208V
230V	220V, 230V or 240V
380V	380V
460V	440V, 460V or 480V
575V	550V, 575V or 600V
50 HERTZ	
220V	208V, 220V, 230V, 240V
230V	220V, 230V or 240V
400V	380V, 400V or 415V
500V	460V, 480V or 500V

7 Maximum allowable voltage unbalance between phases shall not exceed 2%.

1. Upon receiving the unit all control wiring should be checked against the wiring diagram enclosed with the unit to see that none have been damaged in transit.
2. It is most important that the electrical voltage, phase and Hertz called for on the nameplate, be connected to the unit.

   REFER TO THE ELECTRICAL WIRING INDEX ON PAGES 14, 15 AND 16 FOR THE PROPER WIRING OF YOUR COMPRESSOR.
3. A fused disconnect switch should be installed by the customer to protect the system against short circuiting.
4. Three phase air-cooled 'AH' and 'AWH' units have three phase D-B Metic compressors with single phase condenser fan motors of the same voltage. The fan motors (with a voltage tolerance of ±10%) will not perform satisfactorily through as wide a voltage tolerance as the compressor motor. This is why the exact voltage (i.e. 208 versus 230V) must be specified when ordering.
5. Three-phase D/B-Metic Motor Compressors will operate with motors running in either direction.

J. CONTROL SETTINGS & CONNECTIONS

1. Hi-Lo Pressure Control Settings in PSI

REFRIGERANT	HIGH PRESSURE CUT OUT CUT IN	LOW PRESSURE CUT OUT CUT IN
R-12	Factory Preset Depending Upon Application	Not Factory Preset Must Be Field Set
R-22, R-502		

2. Oil Pressure Control Setting
   The oil pressure safety control is set to cut in at 12 psi and cut out at 7 psi of oil pressure.

   On compressors supplied with oil pumps the oil pressure should be 20 pounds above suction pressure.
3. Pressure Control Connections
   a. Low Pressure:
      The control connection is a half union elbow located on the compressor end near the center of the cylinder body on all fractional units (5HCL thru 11HCL).
      The control connection on integral units (15H and larger) is a tapping located in the suction end bell adjacent to the suction service valve.
   b. High Pressure:
      The control connects to a "T" on a cylinder head of most models and on others to a tapping in the discharge service valve near the cylinders.
   c. Oil Pressure: (Requires two connections in order to sense differential between discharge and suction pressures).;
      (1) High pressure connects to a plugged hole adjacent to pump cover.
      (2) Low pressure connects to a plugged hole in crankcase end plate.

K. FOUR CONDITIONS NECESSARY

No matter how detailed one gets in outlining installation procedures, everything that is done to prepare a system before making it operational is really aimed at arriving at four (4) conditions. These four conditions are vitally necessary to start the system out in good shape – free of contaminates, free of noncondensables, dry and in a condition which will assure trouble-free operation:

(1) Clean System (3) Acid Free System
(2) Dry System (4) Free of Noncondensables

IV. OPERATION

A. HOW TO START A NEW INSTALLATION

Compressors and units are shipped from factory with a holding charge of refrigerant 12, 22 or 502.

The compressor should be started up only by a refrigeration mechanic who is familiar with accepted operation practices for refrigeration systems.

A newly started compressor should not be left unattended. If possible, plan work on an installation so that a mechanic will be present on the job for the first day or two of operation.

1. Make all connections and open valves.
2. Connect pressure and compound gauges and charging drum.
3. Be sure discharge line valve between compressor and condenser is open.
4. Charge through suction gauge port in service valve of compressor.
5. Charge small amount of refrigerant into system and check for leaks with a leak detector. **THE ENTIRE SYSTEM SHOULD BE CHECKED INCLUDING THE FACTORY BUILT UNIT AS LEAKS CAN DEVELOP IN HANDLING.**
6. Evacuate system completely by using a vacuum pump. (See section on evacuation page 6 of this manual).
7. Extend separate electrical power line from disconnect switch to compressor control box. Be certain wiring is heavy enough to carry load. Check nameplate amps.
8. Check voltage to motor. Voltage must be within ± 10% of compressor nameplate at the motor terminals for single phase units.

   Voltage must be within ± 15% (except for -10% only with 208/3/60) for three phase units.

   See page 7 for table of voltage tolerances.

   The terminal wiring schematic for each compressor is located on the inside cover of the terminal box. Compressor units or condensing units supplied with electrical control panels include the unit wiring schematic inside the panel door.
9. Replace covers on controls and switches.
10. Crankcase heaters are recommended for all systems to keep liquid refrigerant out of the crankcase. Serious damage to the compressor may result if this recommendation is not followed. When starting new systems or systems which have been shut down for a prolonged period, the crankcase heaters must be energized for a minimum of 24 hours prior to start-up.
11. On low temperature units it may be necessary to throttle the suction valve during the initial "Pulldown" of the evaporator in order to prevent overloading the motor, particularly under low-voltage or high ambient conditions. This may be accomplished by partially closing the suction service valves until the suction pressure is 15 pounds per square inch. Pressure limiting expansion valves or crankcase pressure regulating valves may be used to prevent motor overloading during "Pulldown" under extreme operating conditions.
12. Use supplementary fine mesh strainers in the water line before the water valve on all water-cooled condensers.
13. Remove all gauges and retest for leaks with leak detector.
14. Check oil level. Compressors are equipped with a sight glass for checking the oil. Oil level should be near center of sight glass. (See instructions for checking oil level under Lubricants, Page 12.)
15. Replace all seal caps on valves.
16. Check tags attached to mounting bolts for instructions.

FOR COMPRESSORS WITH OIL PUMPS

17. Observe oil during operation to see that oil is being agitated indicating oil pump is functioning properly. If there is any doubt about proper functioning, check oil pressure by installing gauge in the 1/4" pipe tapped opening in the pump cover. Oil pressure differential should be 20 lbs.
18. If there is insufficient oil pressure:
    a. Reverse direction of compressor. The pump is a reversing type.
    b. If reversing does not product oil pressure, check the oil strainer to see if it is plugged. If strainer is clean, replace the complete pump end plate assembly, not jut the pump.
19. If the oil becomes discolored indicating contamination, the contamination can be eliminated by installing a new drier in the liquid line and changing the oil. The oil can be drained by removing the bottom bolt of the compressor end cover on certain models. This bolt will have a neoprene coated washer. The washer should be replaced whenever the bolt is removed.

LUBRICATION OILS

WARNING: USE ONLY DUNHAM-BUSH APPROVED REFRIGERATION OIL. WARRANTY WILL BE VOID IF OTHER THAN APPROVED OIL IS USED.

See Page 12 for oil specifications.

B. NORMAL OPERATION

Most condensing units are wired with a pumpdown circuit. Assume the compressor is running and the thermostat is calling for refrigeration. As the thermostat is satisfied, the evaporator will cycle off, and the liquid line solenoid will close. As the suction pressure drops to the preset cutout point of the low pressure control, the compressor will shut off. As the temperature rises, the thermostat again calls for cooling and opens the liquid line solenoid. Refrigerant now enters the evaporator and pressure builds up in the suction line. The low pressure switch closes, allowing the compressor to start.

C. OPERATION OF COMPONENTS

1. BODY COOLING FANS

Compressor body cooling fans are required on all low temperature R-12 and R-502 applications 2 HP and larger. Body cooling fans are not required for compressors used on self contained air cooled condensing units, such as Dunham-Bush AH and AWH units.

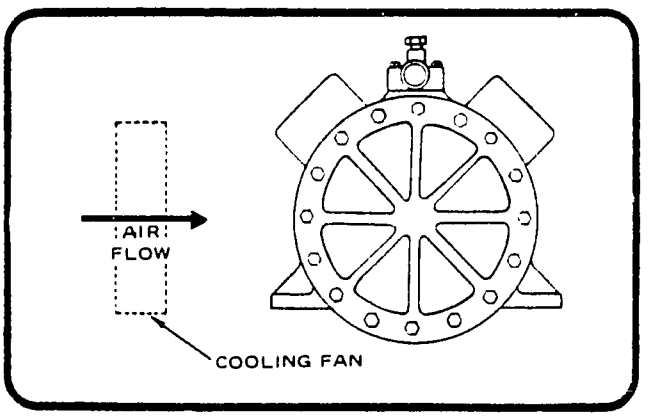

2. START AND RUN CAPACITORS

Experience has shown that many semi-hermetic compressors which are returned to the factory as defective are in perfect operating condition. In such cases, the trouble frequently is in the electrical accessories.

All single-phase motors in the D/B-Metic compressors are of the capacitor start type, with high starting torque to insure quick starts under all reasonable operating conditions.

A single-phase motor will not start without the assistance of a starting winding having a starting capacitor connected in series with it.

This start winding with its capacitor creates a phase displacement of current between the start and run windings which are out of phase with each other. This phase imbalance will cause the rotor to turn and as it picks up speed a centrifugal switch, or other means of opening the circuit, will disconnect the start winding.

The basic electrical circuit is shown in Figure 1.

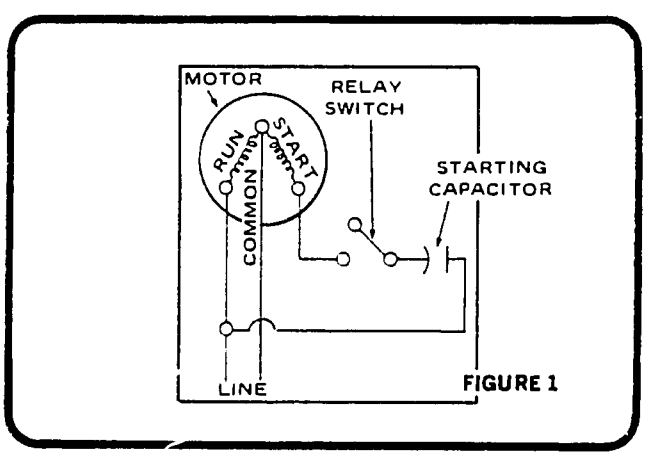

FIGURE 1

On 1 HP and larger single-phase motors, additional torque is obtained by connecting a running capacitor across the start and running terminals, as shown in Figure 2. This running capacitor makes the starting windings serve as another running winding, even after the relay switch opens. Whereas, on the smaller motors where no running capacitor is used, the start winding remains idle, except when starting the motor. This running capacitor not only gives the motor more torque, but also increases its efficiency, improves the power factor and reduces the current which the motor draws.

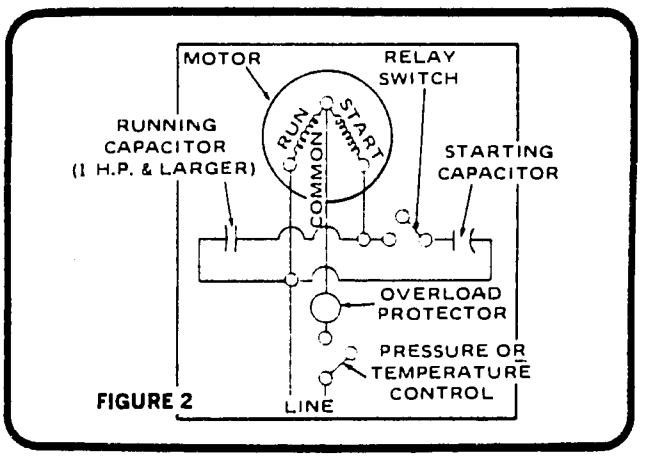

FIGURE 2

3. VOLTAGE-TYPE RELAYS

All of the single-phase compressors use voltage-type relays. The voltage-type relay is a normally closed relay. Its contacts are opened by the line voltage impressed across its coil plus the voltage induced by the start windings.

The coil remains energized by the voltage induced across the starting winding, thus holding the contacts of the relay open until such times as the motor should slow down under load. As the motor slows down under an overload, the voltage across the relay coil decreases until the relay coil allows the contacts to again close, thus connecting the starting winding. When the compressor is stopped for any reason, the relay contacts close, ready for the next step.

Figure 3 shows the circuit for the voltage-type relay.

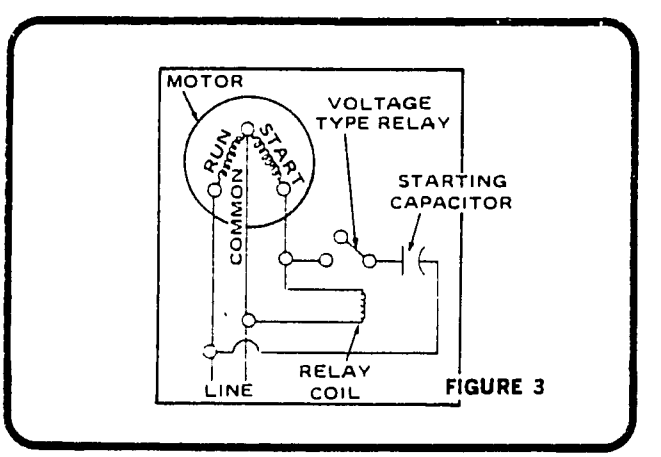

FIGURE 3

4. OVERLOAD PROTECTORS

For the complete D/B-Metic line of semi-hermetic compressors several types of motor protection are offered. The various types used are as follows:

a. Magnetic starter with quick trip overloads – offers excellent locked rotor protection and very good motor overload protection. This bi-metallic overload relay senses an increase in current draw and works on an inverse time element principle. That is, the higher the current draw through the relay, the shorter the time period to open the circuit and conversely the lower the current draw, the longer the time period to open the circuit.

b. **Inherent type overload protector** (Klixon) is mounted inside the compressor terminal box and rests against the side of the motor shell where it can feel the motor heat. This device is operated by both temperature and electric current and is adjusted to disconnect the motor in case of a dangerous overload or if the motor gets too hot, or a combination of both conditions. The overload is connected in the common line on single-phase units and to all three phases of the motor at the point of the Wye type motor. This overload offers excellent locked rotor protection and therefore a starter with overloads is not required where this device is offered.

When the protector operates due to overload or over temperature, or a combination of both, all three leads are broken simultaneously. When the protector disc cools, it automatically resets, attempting to restart the compressor.

c. **Thermostats** built into the winding of the motor. The thermostat is temperature sensing only and will protect the motor against dangerous overheating. On compressor motors where this device is used either a **magnetic starter with quick trip overloads or inherent type overload protector must be used** as the thermostats do not react fast enough to the rapid temperature rise that takes place on locked rotor condition.

Two terminals are provided on the side of the compressor body for connection of the thermostats to the electrical control circuit.

See latest edition of Catalog 4030 for the type of motor protection offered with all of the D/B-Metic compressors 1/2 HP through 20 HP (204 PHF).

5. LIQUID INJECTION

FOR USE ON LOW TEMP. R-22 COMPRESSORS INVOLVING HIGH COMPRESSION RATIOS AS INDICATED IN CATALOGS

This system is designed to properly cool a compressor operating with a return gas temperature between 35° and 30°F. It is designed to meter liquid refrigerant into the suction cavities of the cylinder heads during compressor operation. The liquid refrigerant expands into vapor and cools the gas entering the compressor cylinders, thereby lowering the temperature in the cylinders and the discharge gas.

The complete liquid injection system consists of a capillary tube, all necessary piping and fittings, two lengths of a suitable tubular insulation material, a filter drier, a mounting bracket and a solenoid valve. The filter drier prevents clogging of either the valve or capillary by foreign particles contained in the liquid refrigerant. The solenoid valve initiates liquid injection when the compressor starts and terminates injection when the compressor stops. Solenoid valve wiring is critical and is detailed on the page directly following.

The capillary tube meters refrigerant flow to prevent compressor overheating or liquid slugging. The capillary is calibrated as to inside diameter and length for a specific compressor.

NOTE: Frost will appear on the cylinder head fittings when the system is operating normally.

If the injection system is connected to extract liquid from a horizontal liquid line, the connection should be made from the bottom of the line to insure proper liquid feed.

Other than correct wiring and connection to the liquid line, there are no special precautions to be imposed on the system outside of those that normally are associated with semi-hermetic refrigeration systems.

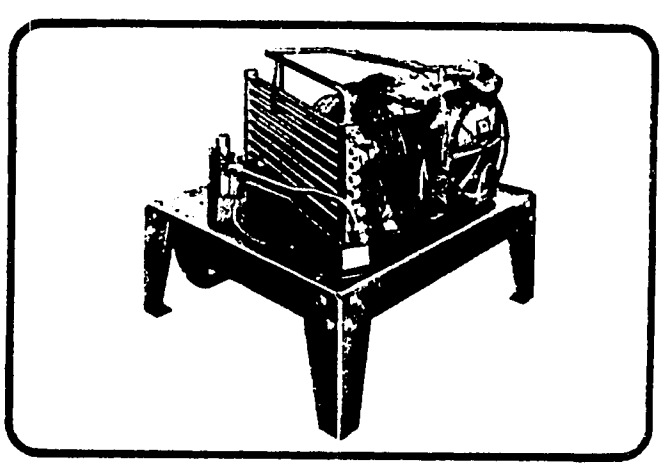

TYPICAL LIQUID INJECTION INSTALLATION

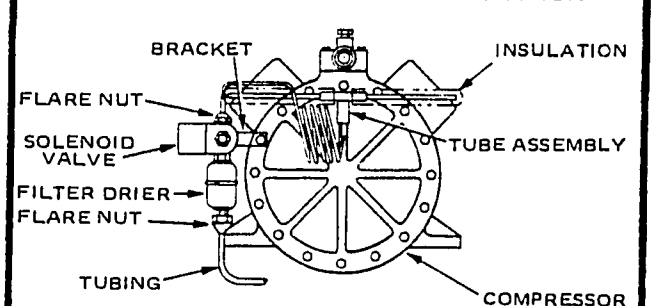

When ordering, specify KIT195, and include compressor model, type and serial numbers.

IV. OPERATION

LIQUID INJECTION SOLENOID COIL WIRING PROCEDURE

(A) THREE-PHASE WITH "NEUTRAL" LINE BREAK INHERENT PROTECTION:

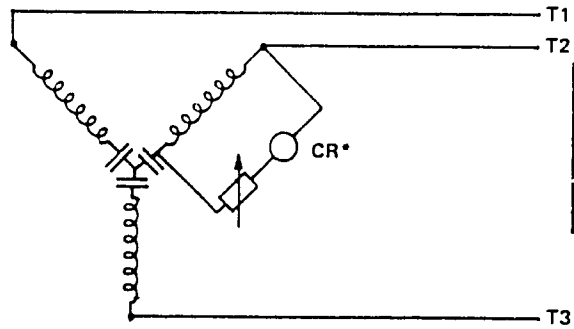

LINE VOLTAGES		COIL VOLTAGES
208/3/60	440/3/60	RELAY WITH VARIABLE
208-230/3/60	460/3/60	RHEOSTAT TO
220/3/60	480/3/60	ACCOMMODATE
240/3/60	575/3/60	200-575 LINE VOLTAGE

* The relay must be connected across any one phase of the three phase winding.

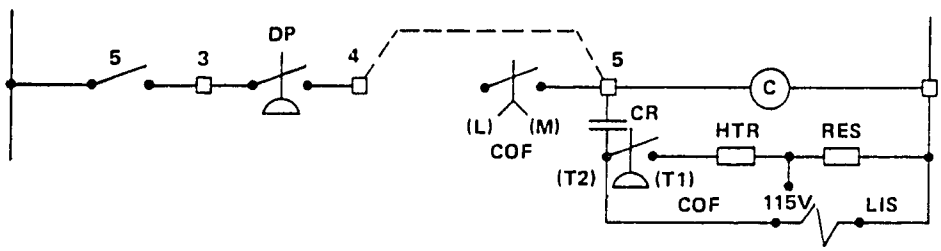

LEGEND

C – CONTACTOR
CR – CONTROL RELAY
COF – COMPRESSOR OIL FAILURE SWITCH
HTR – HEATER
RES – RESISTOR
LIS – LIQUID INJECTION SOLENOID
DP – DUAL PRESSURE SWITCH

(B) THREE-PHASE WITHOUT "NEUTRAL" LINE BREAK INHERENT PROTECTION:

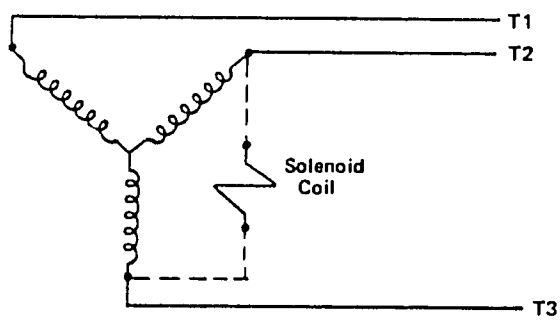

LINE VOLTAGES		COIL VOLTAGES	
200/3/50	240/3/60	200/1/50	240/1/60
208/3/60	440/3/60	208/1/60	440/1/60
208-230/3/60	460/3/60	208-230/1/60	460/1/60
220/3/50	480/3/60	220/1/50	480/1/60
220/3/60	500/3/50	220/1/60	500/1/50
230-400/3/50	575/3/60	230-400/1/50	575/1/60

(C) THREE-PHASE WITHOUT "NEUTRAL" LINE BREAK INHERENT PROTECTION:
(Voltages and Cycles not included in "B")

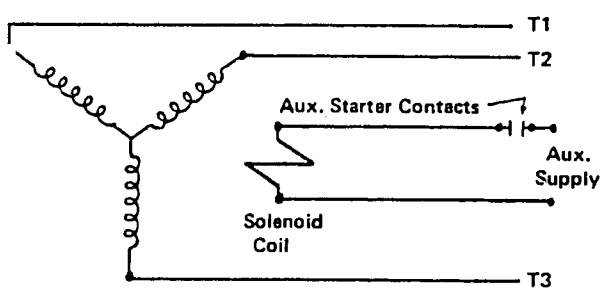

LINE VOLTAGES	COIL VOLTAGES
380/3/50	*
400/3/50	*
415/3/50	*
550/3/60	*
575/3/60	*

* Secondary voltage supply required and determined by standard coils available.

(D) SINGLE-PHASE:

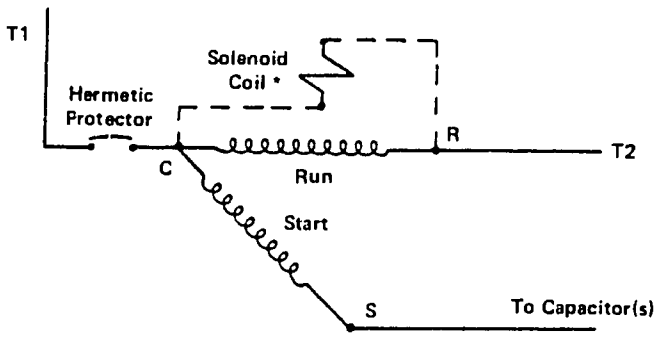

LINE & COIL VOLTAGE
115/60
208/60
220/50
230/60

* The solenoid coil must be connected across the "C" and "R" terminals.

V. MAINTENANCE

A. PERIODIC INSPECTION

To obtain satisfactory service from your D/B-Metic equipment it is necessary that it has periodic inspections to see that the unit is kept clean and free of any obstructions which might hinder its operation.

1. Blow dust from fins of air cooled condensers. Dust, lint and other matter can obstruct air movement through the condenser and seriously affect its performance and operation.
2. Do not use a filter over air cooled condenser that will reduce its normal rated air flow.
3. Check all controls and starters (if used) for burned or worn contact points.
4. Check oil level.
5. Check the unit for sufficient refrigerant. The installation of a liquid sight glass will make it easy to check the refrigerant level. Important: The unit must be running to get a satisfactory reading on the liquid sight glass.
6. Be sure the fixture or condensing unit has not been pushed back against the wall or that boxes or debris have not been stacked or piled around the unit.
7. Check to see that the water valve on a water cooled unit has not been adjusted to higher head pressures.
8. On water cooled units it may be necessary to periodically "rod-out" the condensers to free them of scale. All D/B-Metic water cooled condensers are of the cleanable type.
9. If the unit is used with a cooling tower or an evaporative condenser in areas where mineral deposits and scale are excessive, contact your refrigeration wholesaler for advice as to how to treat such equipment.

B. LUBRICANTS

Compressor oil level can be checked by the sight glass. To make sure that proper oil level is observed operate the compressor for 15 minutes, then stop the compressor. Oil should appear from 1/2 to 3/4 in the sight glass with the compressor stopped.

Oil may be added by attaching a charging manifold to the gauge port on the suction valve and putting a 1/4" copper tube to the center connection of the charging manifold well down into a container of refrigerant oil. With a positive pressure on the gauge, open the hand valve momentarily to purge the copper tube of air then close the liquid shut off valve on the receiver and pump the system down until the gauge reads 10" (water gauge) vacuum, stop the compressor and open the hand valve to suck in oil from container slowly until the proper level is visible in the sight glass

COMPRESSOR OIL CAPACITIES

COMPRESSOR	OIL CAPACITY (PINTS)
2 Cylinder Fractionals (½ thru 1 HP)	1¾
2 Cylinder (1½ thru 3 HP)	3
3 & 4 Cylinder (3 thru 10 HP)	6
6 Cylinder (7½ thru 20 HP)	10

Current production compressors are supplied with either 150 SUS or 300 SUS oil, as follows:

All high temperature models with pumps, i.e. - PH, - PHF, - PH5 and - PHF5	300 SUS
All Other Models	150 SUS

WARNING: Warranty will be void if non-approved oil is used.

Approved Oils:

150 SUS . . . . . .SUNISO 3GS, CAPELLA WF32
300 SUS . . . . . .SUNISO 4GS, CAPELLA WF68
Plus approved brands listed in Service Bulletin SR42.

Specifications:

Viscosity SUS @ 100°F	150 to 160	280 to 310
Pour Point °F	-45 to -55	-35 to -45
Flock Point °F	-60 MAX.	-50 MAX.
Flash Point °F	330 MIN.	330 MIN.
Fire Point °F	380 MIN.	380 MIN.
Neutralization No. mg KOH/g	0.03 MAX.	0.03 MAX.
Water Content PPM	25 MAX.	25 MAX.

C. CONDENSER FAN MOTOR

If head pressure controls (fan cycling type) are not used, the fan motor should run whenever the compressor is running. If it does not, turn the fan by hand to see if it turns freely. If it turns freely, and the lead wires are connected, it is defective and must be replaced.

Fan motors are sometimes a source of noise, which can be caused by worn bearings, bent fan blades, etc.

NOTE: All fan motors having oiling cups should be oiled every six months. Sealed fan motors do not require oiling.

D. VALVE PLATES

The valve plates may be quickly removed for inspection or replacement without removing the compressor from the installation.

The compressor must be pumped down, isolated from the system and relieved of pressure prior to beginning work.

If a leaky discharge valve is suspected, this may be checked by installing a compound service gauge on the gauge port of the suction valve. Close the suction valve and run the compressor until a vacuum of 10—15 inches of mercury is indicated on the gauge. Crack the suction service valve until the value in the crankcase returns to zero. Close the valve tightly. If the pressure in the crankcase continues to rise, this indicates a leaky discharge valve, and the valve plate assembly should be replaced.

If valve replacement becomes necessary follow these simple instructions:

1. Close suction and discharge service valves and bleed crankcase to atmosphere.
2. Remove heads. Two cylinder machines have 1/2" bolt heads; 4 and 6 cylinder machines have 9/16" bolt heads.
3. If the suction valve has failed, remove any raised places from the piston. This can be done with a pocket knife on those models that have aluminum pistons. If there are any sharp edges raised on the suction valve stop, they should be removed by the use of a small honing stone or a similar type stone.

CAUTION: Care should be exercised to see that grit or other foreign particles do not get in the crankcase.

4. Remove the old gaskets from compressor and replace with new gaskets that come with replacement valve plate. Make sure the gasket is positioned properly.

CAUTION: Do not leave old gasket on the machine and install the new gasket because the change in clearance will cause the suction valve to fail.

5. Replace valve plate and heads.
6. Purge and evacuate compressor.
7. Start compressor.

NOTE: Valve failures are often caused by the entrance into the cylinders of a liquid (either liquid refrigerant, oil or both). After a failure it may be wise to observe the compressor throughout its entire cycle and correct any observed malfunction that could cause valve failure.

E. HOW TO REPLACE A BURNED OUT MOTOR COMPRESSOR

(Instructions for Cleaning System After Motor Burnout)

If failure of the motor compressor by motor burnout is experienced, the following procedure must be used to clean the refrigeration system of contamination resulting from the motor burnout.

1. Close the compressor service valves and remove the burned out compressor.
2. Install the new compressor and a filter drier in the suction line using an adapter at the suction valve if available as shown in schematic below so that gas passes through the filter drier before entering the compressor. If adapter is used be sure that the hose between the filter drier and compressor is clean. Use largest sized filter drier with openings matching suction line.
3. Evacuate the compressor and the system cleaner with a good vacuum pump, break the vacuum with refrigerant and re-evacuate. Only the compressor and system cleaner need to be evacuated, since the service valves have been closed – isolating the refrigerant in the system.
4. Open the compressor service valves, close the liquid line valve, and pump down the system. Install an oversized filter drier (at least one size larger than the normal selection size) in the liquid line, removing the old filter drier if one exists.
5. Operate the system using usual starting procedure. Check the pressure drop across the system cleaner during the first hour of operation and change the cores if it becomes excessive.
6. In 8 to 24 hours take an oil sample. If oil tests free of acid and is clean, remove the system cleaner.
7. When the system cleaner is removed, replace the liquid line filter drier and install a sight glass with moisture indicator in the liquid line.
8. In two weeks re-check the color and acidity of the oil to see if another change in liquid line filter drier is necessary. Before the job is completed, it is essential that the oil be clear and acid free. The sight glass with moisture indicator will indicate if the filter drier must be changed to reduce the moisture content of the system.

NOTE: – If motor burnout is of an extreme nature, from motor continuing to operate even while burning, flushing of the system must be done instead of following the above procedure.

1. Drain water-cooled condensers and purge refrigerant from the system. If possible, purge refrigerant in liquid form.
2. Remove defective motor protector from system.
3. Remove driers or cores. Replace throw-away type with jumper tube.
4. Remove expansion valve cage and screen and wash thoroughly with solvent.
5. Connect system as shown below and flush until solvent appears clear. It may be necessary to change filter and/or solvent if system is very dirty.
6. Blow system clear of solvent with dry nitrogen. Install new compressor and a moisture indicating sight glass. Do not install drier. Install large capacity suction filter.
7. Charge with small amount of refrigerant gas to about 80 to 100 psig and test for leaks. Repair leaks, if any.
8. Evacuate system to 150 microns and hold for 15 minutes.
9. Break vacuum to 0 psig or slightly over with refrigerant.
10. Repeat steps 8 and 9 with compressor valves open.
11. Install new drier at least one size larger than would normally be required for the system.
12. Connect vacuum pump and operate for eight hours. If ambient temperature surrounding system is below 60°F, it may be necessary to supply supplemental heat to the system.
13. Charge system with refrigerant gas to 5 to 10 PSIG. On air-cooled machines disconnect the fan motor. On water-cooled machines cut off the water. Operate the compressor until the entire system is warm to touch, but no longer than 20 minutes.
14. Charge the system in the normal manner and operate for 48 hours.
15. Change driers and remove suction filter if there has been a temporary filter installed. If permanent filter has been installed, clean the filter or replace core.

CAUTION: Do not use the compressor to evacuate the system and do not operate the compressor under a vacuum until fully charged with refrigerant.

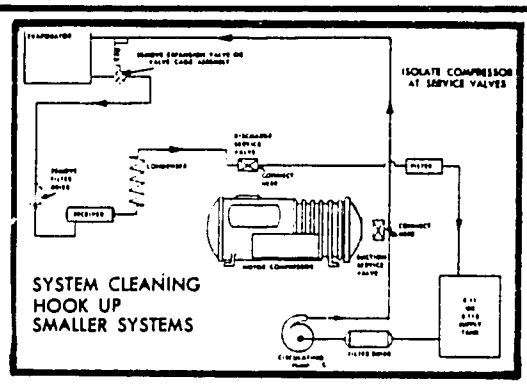

V. MAINTENANCE

F. INDEX - D-B METIC TERMINAL BOX WIRING DIAGRAMS

60 HERTZ

-CL* SINGLE PHASE (KLIXONS REQUIRED)

HP	MODEL	VOLTAGE	WIRING DIAGRAM FORM
½	5CL	208/230/1/60	DCM100
¾	8CL	208/230/1/60	DCM100
¾	9CL	208/230/1/60	DCM79
1	10CL 11CL		

*Single phase '-CL' models may not operate in the high temp. range.

-HCL THREE PHASE (STARTERS & OVERLOADS REQUIRED)

HP	MODEL	VOLTAGE	WIRING DIAGRAM FORM
½	5HCL	208/230/3/60 460/3/60	DCM75
¾	8HCL	208/230/3/60 460/3/60	DCM75
	9HCL	208/230/3/60 460/3/60	DCM76
1	10HCL 11HCL	208/230/3/60 460/3/60	DCM76

H.P.	MODEL	VOLTAGE	WIRING DIAGRAM FORM
1½	15H/CF/LF 15C/ELF 15L	208/230-1-60	DCM91
		208/230-3-60	DCM92
		460-3-60	
		575-3-60	DCM93
2	20HF 20L 20H/CF/LF 20C/ELF	208/230-1-60	DCM91
		208/230-3-60	DCM92
		460-3-60	
		575-3-60	DCM93
3	30HF 30CF 30H/LF 32C/ELF	208-1-60	DCM81
		230-1-60	
		208/230-3-60	DCM92
		460-3-60	
		575-3-60	DCM93
3	30C/ELF 30L	208-1-60	DCM81
		230-1-60	
		208/230-3-60	DCM82
		380-3-60	DCM83
		460-3-60	DCM82
		575-3-60	DCM83
5	50CF 50H/LF 50C/ELF 50L 52HF 51PL	208-1-60	DCM81
		230-1-60	
		208/230-3-60	DCM82
		380-3-60	DCM83
		460-3-60	DCM82
		575-3-60	DCM83

H.P.	MODEL	VOLTAGE	WIRING DIAGRAM FORM
7½	75HF,75CF 75H/LF,75PL 75PC/ELF 76PL,77PC/ELF 76PH/C/ELF	208/230-3-60	DCM82
		380-3-60	DCM83
		460-3-60	DCM82
		575-3-60	DCM83
10	100PHF 104PL 101PH/C/ELF 111PHF/CF	208/230-3-60	DCM84(XL/PW)
		380-3-60	DCM86
		460-3-60	DCM85
			DCM84(XL/PW)
		575-3-60	DCM86
15	151PHF/CF 154PH/C/ELF	208/230-3-60	DCM84(XL/PW)
		380-3-60	DCM86
		460-3-60	DCM85
			DCM84(XL/PW)
		575-3-60	DCM86
17½	201PHF/CF	208/230-3-60	DCM84(XL/PW)
		380-3-60	DCM86
		460-3-60	DCM85
			DCM84(XL/PW)
		575-3-60	DCM86
20	204PHF/CF	208/230-3-60	DCM84(XL/PW)
		380-3-60	DCM86
		460-3-60	DCM85
			DCM84(XL/PW)
		575-3-60	DCM86

NOTES: All diagrams are for X-L unless otherwise noted.

XL = Across-The-Line Start
PW = Part Winding (or Two Step) Start

The wiring diagrams shown on the following pages are useful for the field wiring of D-B Metic Compressors to starters (or contactors in some cases). These same wiring diagrams are mounted on the side of the compressors in the form of a decal. Typical wiring schematics showing operating and safety controls can be found in D-B Metic Catalog 4030. When units are supplied with optional electrical panels, the controls and starters (or contactors) are completely factory mounted and wired, and include a unit wiring schematic inside the panel door.

1123

G. INDEX - D/B METIC TERMINAL BOX WIRING DIAGRAMS (CONTINUED)

50 HERTZ

H.P.	MODEL	VOLTAGE	WIRING DIAGRAM FORM
¾	9HCL	230-3-50	DCM77
1	10HCL, 11HCL	400-3-50	
1½	15HF5 15H5/CF5/LF5 15C5/ELF5 15L5	230/400-3-50	DCM94
		500-3-50	DCM93
2	20HF5 20H5/CF5/LF5 20C5/ELF5 22L5	230/400-3-50	DCM94
		500-3/50	DCM93
3	30CF5 30HF5 32H5/LF5	230/400-3-50	DCM94
		500-3-50	DCM93
3	30C5/ELF5 30L5 41PL5	230/400-3-50	DCM89
		500-3-50	DCM83
5	50CF5 52HF5 50H5/LF5 51PH5/C5/LF5 62PC5/ELF5 61PL5	230/400-3-50	DCM89
		500-3-50	DCM83

H.P.	MODEL	VOLTAGE	WIRING DIAGRAM FORM
7½	75HF5 75PL5	220-3-50 400-3-50	DCM84(XL/PW)
	77PH5/C5/ELF5	230/400-3-50	DCM89
		500-3-50	DCM86
10	101PHF5/CF5	220-3-50 400-3-50	DCM84(XL/PW)
	101PH5/C5/ELF5	230-400-3-50	DCM89
	111PHF5/CF5	500-3-50	DCM86
15	151PHF5/CF5	220-3-50 400-3-50	DCM84(XL/PW)
		230/400-3-50	DCM89
		500-3-50	DCM86
20	201PHF5/CF5	220-3-50 400-3-50	DCM84(XL/PW)
		230/400-3-50	DCM89
		500-3-50	DCM86

NOTES: All diagrams are for XL unless otherwise noted.
XL = Across-The-Line Start
PW = Part-Winding (or Two-Step) Start.
All 50 Hertz models listed are full capacity except 9HCL, 10HCL and 11 HCL which have 5/6th of the published 60 Hertz capacity.

D-B METIC TERMINAL BOX WIRING DIAGRAMS
2 CYLINDER MODELS

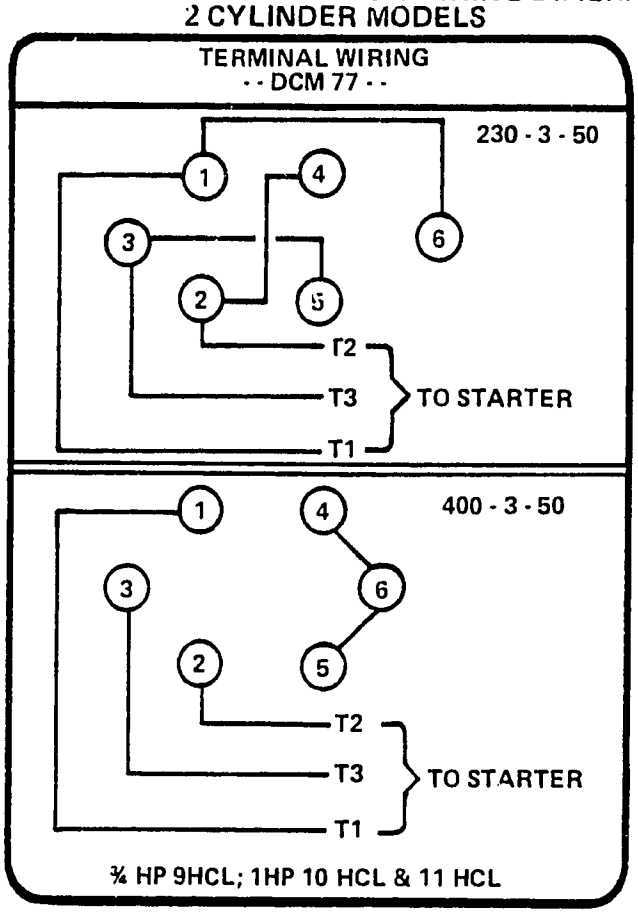

D-B METIC TERMINAL BOX WIRING DIAGRAMS
2 CYLINDER FRACTIONAL MODELS (CONTINUED)

TERMINAL WIRING
- - DCM 75 - -

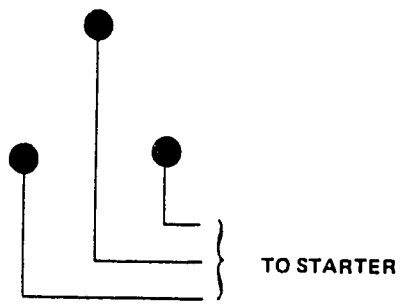

208/230/460/3/60
½ HP 5HCL & ¾ HP 8HCL

TERMINAL WIRING
- - DCM 76 - -

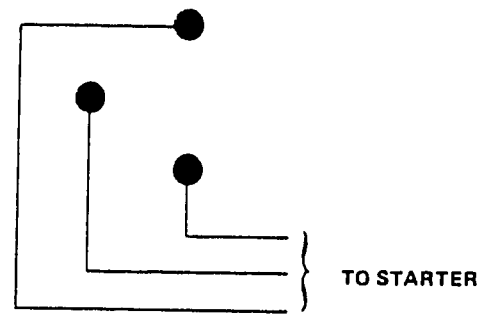

208/230/460/3/60
¾ HP 9HCL; 1 HP 10 HCL & 11HCL

TERMINAL WIRING
- - DCM 79 - -

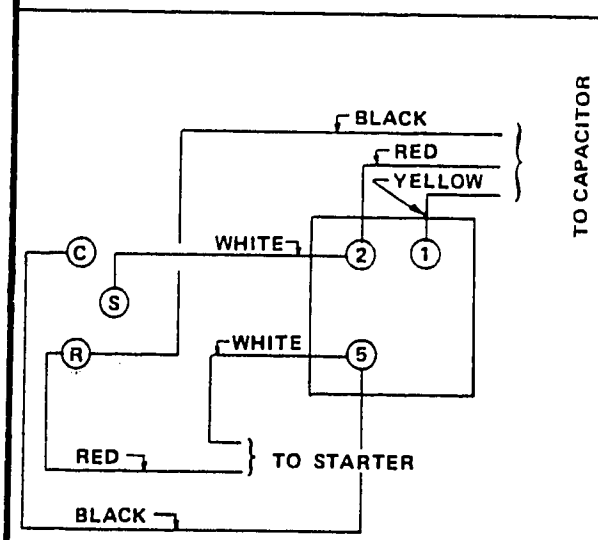

208/230/1/60
¾ HP 9 HCL; 1 HP 10 HCL & 11HCL*

TERMINAL WIRING
- - DCM 100 - -

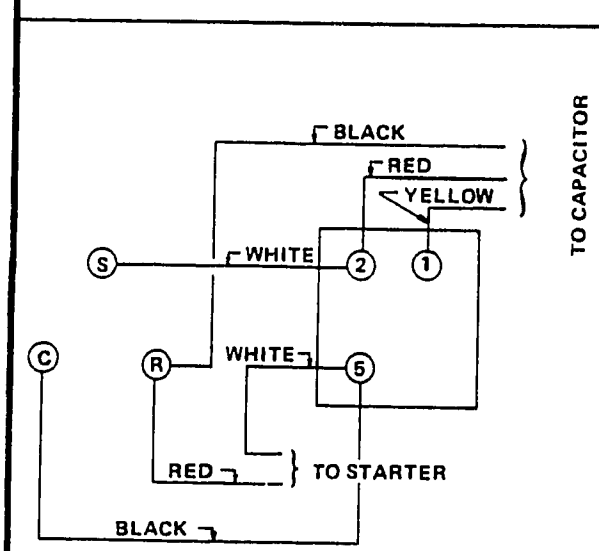

208/230/1/60
½ HP 5HCL; ¾ HP 8 HCL

*11HCL cannot be used for 'H' application on 208/1/60.

D-B METIC TERMINAL BOX WIRING DIAGRAMS
2 CYLINDER MODELS

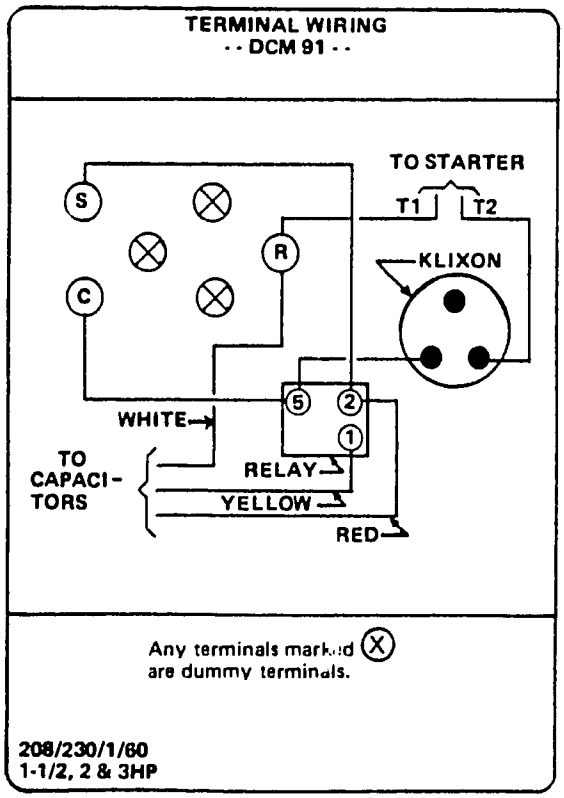

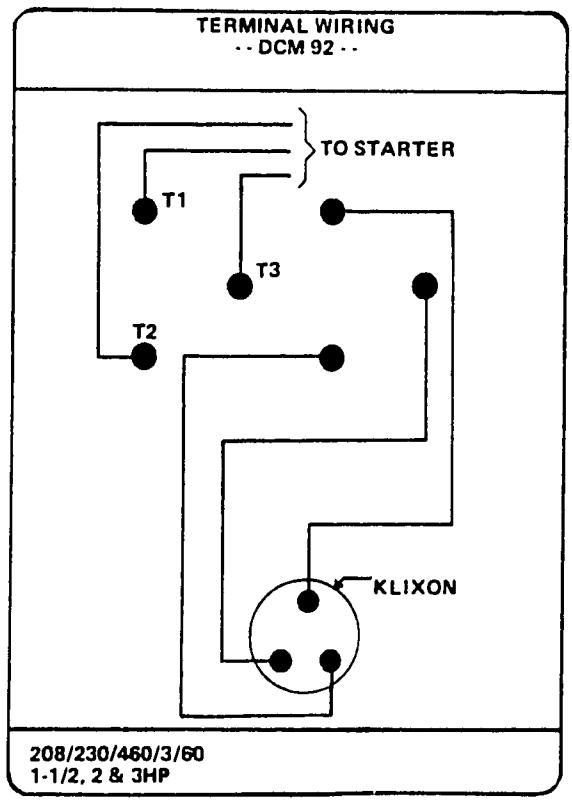

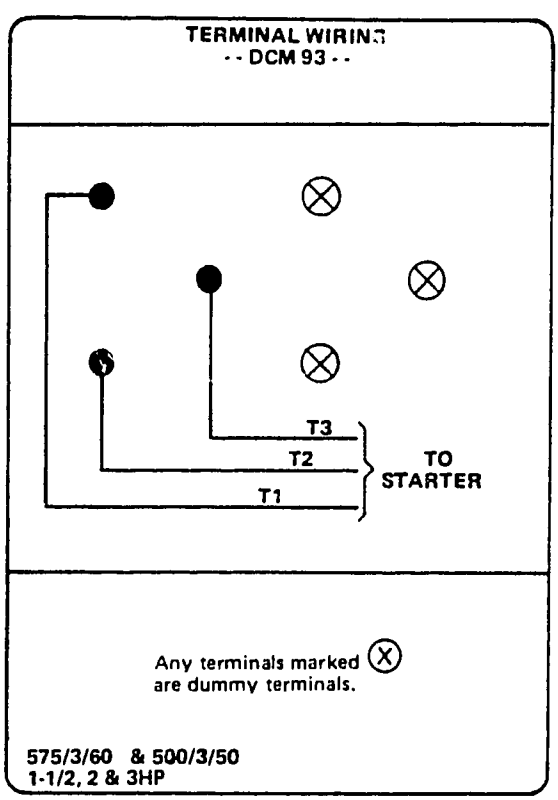

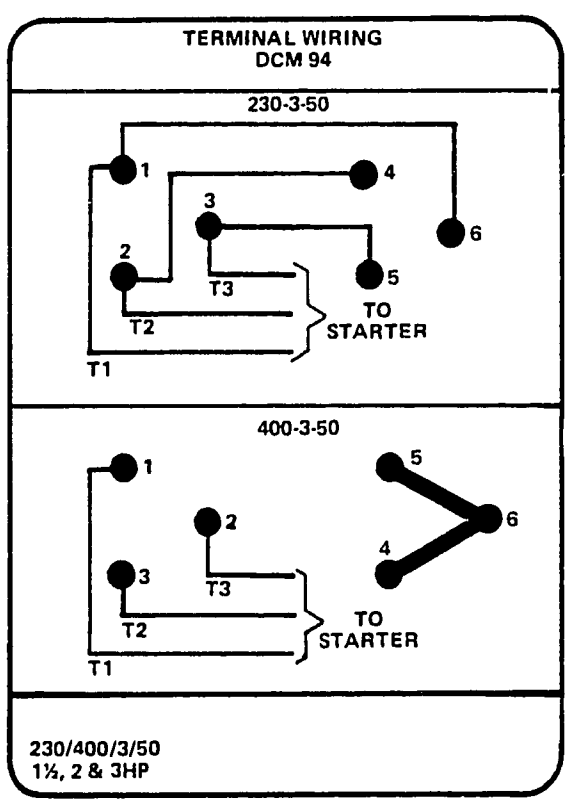

D-B METIC TERMINAL BOX WIRING DIAGRAMS

4 & 6 CYLINDER MODELS

TERMINAL WIRING
- - DCM 81 - -

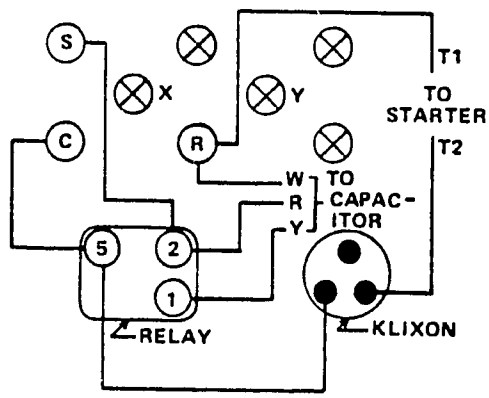

Terminals marked ⊗ are dummy terminals. Some compressors have dummy terminals located in positions X & Y.

208/230/1/60
3 & 5HP

TERMINAL WIRING
- - DCM 83 - -

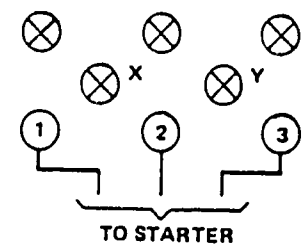

Terminals marked ⊗ are dummy terminals. Some compressors have dummy terminals located in positions X & Y.

380/3/60, 500/3/50 & 575/3/60
3, 5 & 7½HP

NOTE: Connect 3 lead motor per above.
Connect 6 lead motors, with 2 jumpers thusly:

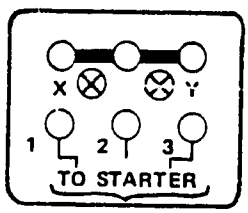

TERMINAL WIRING
- - DCM 82 - -

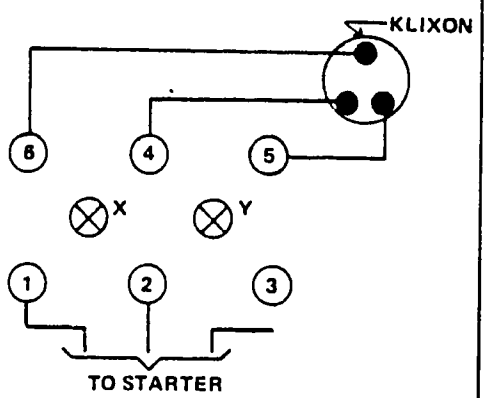

Terminals marked ⊗ are dummy terminals. Some compressors have dummy terminals located in positions X & Y.

208/230/460/3/60
3, 5 & 7½HP

D-B METIC TERMINAL BOX WIRING DIAGRAMS
4 & 6 CYLINDER MODELS (CONTINUED)

TERMINAL WIRING
- - DCM 84 - -

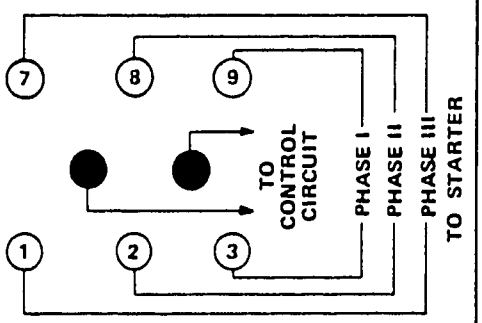

CONNECTION FOR P.W. START

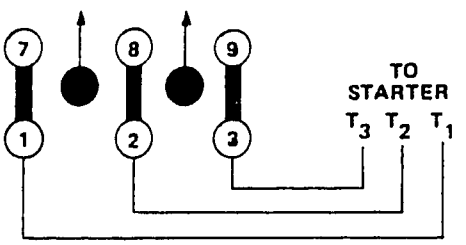

CONNECTION FOR X-L START

The motor thermostats, connected to the terminals marked ● are only rated for pilot circuit duty and must be protected by 1¼ amp fuses.

208/230/460/3/60
10, 15, 17½ & 20HP

TERMINAL WIRING
- - DCM86 - -

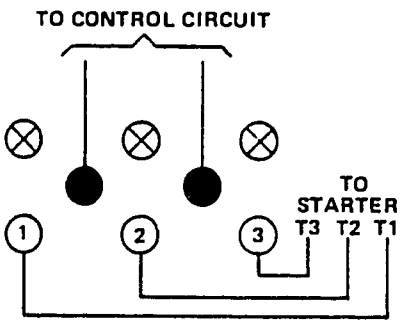

Terminals marked ⊗ are dummy terminals. The motor thermostats connected to terminals marked ● are only rated for pilot circuit duty and must be protected by 1¼ amp fuses.

380/3/60 & 575/3/60
10, 15, 17½ & 20HP

TERMINAL WIRING
- - DCM 85 - -

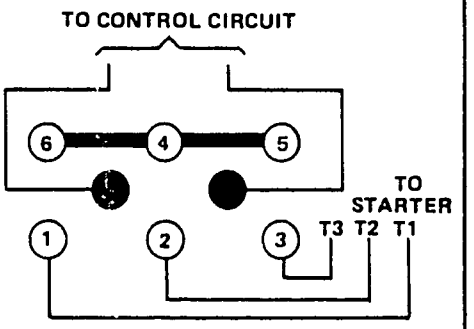

The motor thermostats, if supplied, connected to the terminals marked ● are only rated for pilot circuit duty and must be protected by 1¼ amp fuses.

460/3/60
10, 15, 17½ & 20HP

TERMINAL WIRING
- - DCM89 - -

DELTA CONNECTION

Fof use on systems where voltage supplied to terminals is not more than 264V nor less than 196V.

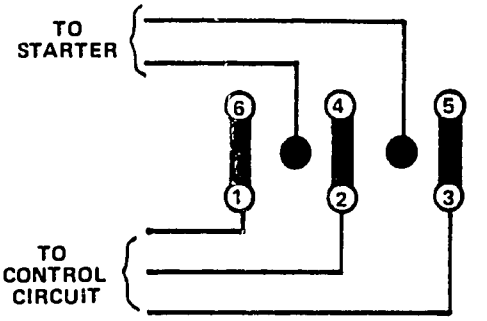

STAR CONNECTION

For use on systems where voltage supplied to terminals is not more than 460V nor less than 340V.

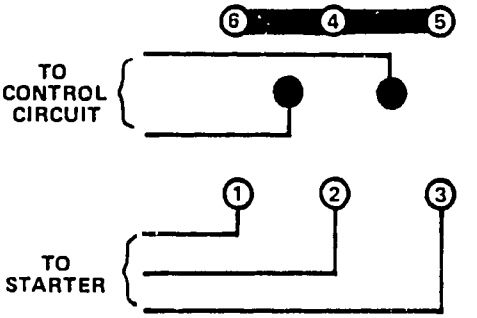

230/400/3/50
3, 5, 7½, 10, 15 & 17½ HP

IV. TROUBLE SHOOTING

A. TEST EQUIPMENT

The minimum equipment necessary to quickly trouble shoot a D/B-Metic compressor electrically is shown below. This consists of a test cord with clips on one end and a two-prong plug on the other (an adaptor may be necessary for 230 volts when there is a three-prong receptacle at the installation.) This can be easily assembled from inexpensive parts purchased at any electrical supply house.

One wire is cut and wired into a socket which will hold a fuse. The fuse can be used for an "off and on" switch. A 7½ watt bulb can be used in the socket so that the cord can be used for continuity checks.

The fused jumper wire is for testing the overload protector on single-phase units.

A large capacitor of at least 230 volts and rating of at least 320 MFD should start any single-phase D/B-Metic motor compressor which is in good operating condition.

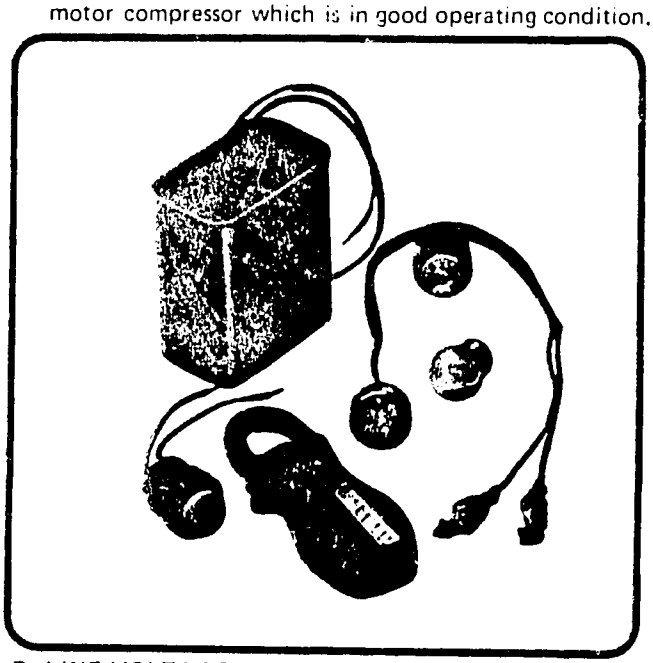

B. LINE VOLTAGE

The first check to be made when a unit will not run is the voltage at the compressor terminals (Common and Run). Be sure the contact points on the pressure control are closed. The voltage at the terminals should be within the limits stated on page 7.

C. STARTING CAPACITOR

For a quick check to determine whether a starting capacitor is still good, disconnect the capacitor lead wires and touch them for a second or two to line wires having the same approximate voltage as the voltage shown on the capacitor (check a 110V capacitor on a 115V line, and a 220V capacitor on a 230V line). Caution: Never check a 110V capacitor on a 230V line, and do not hold a starting capacitor on the line more than a few seconds. Then touch the two capacitor wires together. If they spark on several attempts, the capacitor is good. If not, the capacitor is defective and should be replaced.

A more accurate means of checking a capacitor is to connect the two lead wires momentarily across the line and to measure the current. The microfarad rating of the capacitor may be determined as follows:

$$\text{Microfarad rating} = \frac{2650 \times \text{amps (for 60 cycles)}}{\text{volts}}$$

The reading thus obtained should be within approximately 10% of the microfarad rating stamped on the capacitor.

Running capacitors may be checked in the same manner as starting capacitors.

D. COMPRESSOR MOTOR (Single Phase)

The compressor motor may be checked by removing all wires from the compressor terminals which are marked as follows:

"S" for Start Winding ("W" in earlier models).
"R" for Running Winding
"C" for Common ("B" in earlier models).

Attach a 2-wire test cord to the common and running winding terminals and plug in the test cord to the power supply. Then momentarily touch the leads of an auxiliary starting capacitor having the same microfarad rating and voltage rating as supplied with the unit, across the start and running terminals. If the motor does not start, it is in all probability burned out, has an open winding, or the compressor is seized. If the motor does start, the trouble is in the electrical accessories.

E. STARTING RELAY (Voltage Type)

This is used on all single-phase compressors. If the relay contacts fail to open, the motor will draw excessive current and will cycle on the overload protector and may blow out the starting capacitor. This failure may be due to an open circuit in the relay coil, or to welded contact points. The latter may be determined by disconnecting the power supply and manually trying to open the contact points.

Sometimes a cracked relay base will prevent the contact points from opening sufficiently.

The relay holding coil may be checked as follows: Connect a fused test cord to compressor terminals "C" and "S" and plug the other end of the test cord into the power supply. As the relay requires more than line voltage to actuate, it may still not open. But by pushing the relay actuating arm with an insulated screwdriver, the contacts should remain open, as long as the test current remains on. If not, the relay holding coil is faulty, and the relay should be replaced by one of the same model, or the recommended substitute shown in the D/B-Metic parts list.

In checking the new type relays it is necessary to remove the relay from the compressor terminal box, and remove the relay cover. With all wires disconnected from the relay terminals, connect the fused test cord to terminals 2 and 5 and check the relay following the same procedure as in the above paragraph.

F. RELAY INTERCHANGEABILITY

Your D/B-Metic may be equipped with any one of several relays which are interchangeable. Please note that in all cases, even though the terminals are not necessarily in the same physical position on the relay, yellow, white and black wires connect to Nos. 1, 2 and 3, respectively.

IV. TROUBLE SHOOTING

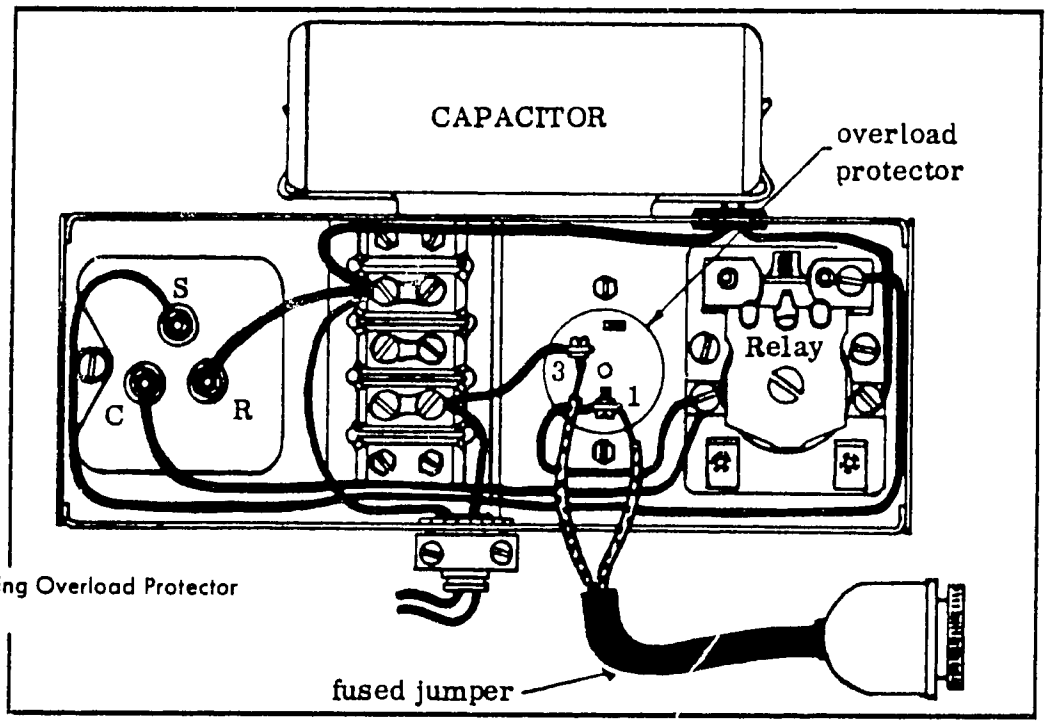

Checking Overload Protector

G. EXTERNAL OVERLOAD PROTECTOR

If there is no voltage on the compressor terminals, it is possible that the overload protector (Klixon) has tripped or is open. The protector can be checked by bridging the protector terminals with a jumper wire, which should contain a fuse for protection. If the compressor now starts, this indicates a defective protector, or an overload condition. Do not disconnect the overload protector and leave the machine operating without any protection. Install a new overload protector. When replacing a compressor be sure to check the overload protector (Klixon) and if necessary install a new one.

H. OIL PRESSURE SWITCH

1. For units equipped with an oil pump, hold the pressure switch in the oil safety switch closed. Do this by moving the arm on the left side of the switch forward. The compressor should stop in about one minute.
2. Should the compressor continue to run for more than a minute and a half, the safety switch wiring should be checked and if found to be correct, the safety switch should be replaced.

NOTE: Be sure the differential switch closes when the compressor is shut down. After making this test, it will be necessary to press the "reset" button on the switch in order to reset the thermal switch. (The thermal switch must be allowed to cool about 3 to 5 minutes before attempting to reset it.)

WARNING: Do not electrically by-pass or manually operate the oil safety switch in order to operate the compressor. If the oil failure switch stops the compressor, it is a signal that something is wrong. To protect the compressor from serious damage, a serviceman should find the trouble before the compressor is restored to normal service. The control is set to cut in at 12 psid and cut out at 7 psid oil pressure.

J. GENERAL CHECK LIST

Abnormal Head Pressure:

Excessively high discharge pressure generally indicates one of the following conditions:

1. Overcharge of refrigerant.
2. Air or non-condensable gases in system.
3. Discharge service valve not fully open.
4. Restriction in discharge line.
5. Inadequate air circulation.
6. Dirty condenser.
7. Clogged water-cooled condenser.
8. Water shut off (or restriction) on water-cooled unit.
9. Water valve set too high.

Compressor Short Cycles:

Probable causes are:

1. Control differential set too closely.
2. Insufficient gas charge, or overcharge.
3. Cutting out on high or low pressure control.
4. Overload protector tripping due to high head pressure, tight bearings, or piston.
5. Expansion valve leaking.
6. Discharge valve leaking.
7. Plugged suction filter – take differential pressure.

IV. TROUBLE SHOOTING

Compressor Fails to Start:

May be caused by one of the following:

1. Disconnect switch not closed.
2. Control contacts open. (Possible defective control.)
3. Fuse blown.
4. Overload protector tripped.
5. Piston or bearing seizure.
6. Defective relay, capacitor or overload.
7. Open thermostat.

Running Cycle Too Long:

May be caused by:

1. Control contacts stuck.
2. Unit too small for application.
3. Insufficient gas charge.
4. Leaky valve plate.
5. Excessive head pressure due to overcharge, air in condenser, dirty condenser, etc.

Noisy Unit:

May be caused by:

1. Compressor low in oil.
2. Tubing rattle.
3. Loose parts on unit.
4. Loose bearings in fan motor.
5. Bent fan blades, causing unbalance.
6. Improper adjustment of mounting nuts.
7. Broken valves.

K. LIQUID INJECTION

The following are possible system malfunctions:

1. Failure to cool, caused by an obstruction in the tubing, a plugged strainer or a closed solenoid valve.
2. Liquid slugging during compressor operation caused by improperly adjusted superheat or oversize capillary.
3. Liquid feed on "OFF" cycle caused by improper solenoid valve wiring or seating.

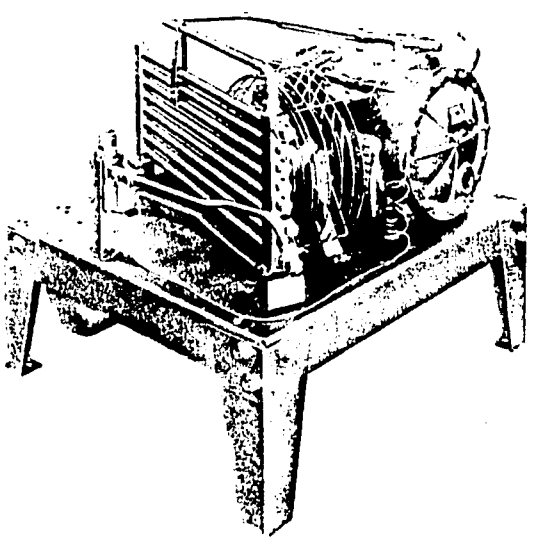

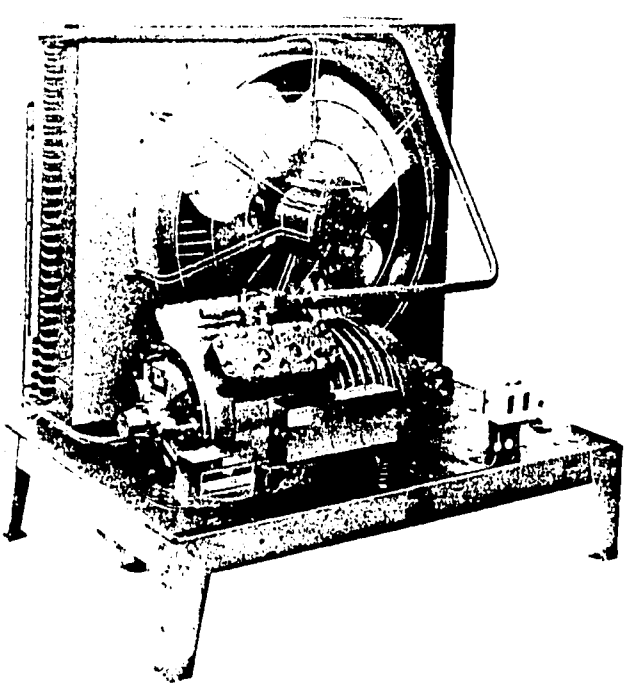

VII. WARRANTIES

A. INOPERATIVE MOTOR-COMPRESSOR . . . may be exchanged or a replacement purchased from any D/B-Metic authorized wholesaler.

1. Wholesaler Procedure for Handling Replacement Motor-Compressors and Parts.

Dealer representing original purchaser-user is charged Dealer's Net Exchange Cost, plus in-bound and out-bound freight*. (This is an Exchange Deposit pending Dunham-Bush's investigation of the motor-compressor or part claimed to be defective.)

Wholesaler returns motor-compressor (less electrical accessories) freight* prepaid and accompanied by Return Material Forms (RM-H) requesting replacement.

If item is found defective due to defective workmanship and/or material, Dunham-Bush replaces to Wholesaler and credits Wholesaler for two-way freight.*

RESULT: Free exchange across wholesaler's counter.

On motor-compressor covered by D/B-Metic Standard One Year Warranty, the exchange (or replacement) motor-compressor will fill out only the balance of the original unexpired time of the 1st year warranty.

2. In-Warranty Exchange (2nd thru 5th Year Warranty)

(This applies only to motor-compressors covered by the D/B-Metic Five Year Protection Plan.)

Dealer representing the original purchaser-user will be charged the Dealer's Net Exchange Cost, plus in-bound and out-bound freight.* (This is an Exchange Deposit pending Dunham-Bush's investigation of the motor-compressor claimed to be defective.)

Wholesaler returns motor-compressor (less electrical accessories) freight* prepaid and accompanied by Return Material Forms (RM-H) requesting replacement for the motor-compressor.

If motor-compressor is found to be defective due to defective workmanship and/or material, Dunham-Bush replaces to Wholesaler and credits for two-way freight.

The Wholesaler will then credit the dealer with the Dealer's Net Exchange Cost, plus two-way freight.*

RESULT: Free exchange across wholesaler's counter.

On motor-compressors covered by D/B-Metic Five (5) Year Protection Plan, the exchange (or replacement) motor-compressor will fill out only the balance of the original unexpired time of the five (5) year warranty.

3. Out-Of-Warranty Replacement.

Dealer representing the original purchaser-user will be charged the Dealer's Net Exchange Cost, plus in-bound and out-bound freight.* (This is an Exchange Deposit pending Dunham-Bush's investigation of the motor-compressor claimed to be defective.)

Wholesaler returns motor-compressor (less electrical accessories) freight* prepaid to and accompanied by Return Material Forms (RM-H) requesting replacement.

If the item is found to be defective and out-of-warranty, the amount paid by the dealer (Dealer's Net Exchange Cost, plus two-way freight*) becomes the sales price for this transaction. Deductions will be made from this sales price for missing parts or if the compressor has been exposed to moisture. No credit will be issued if the crankcase has been cracked.

4. Warranty Coverage By Refrigeration Fixture Manufacturer's Five (5) Year Warranty or Protection Plan.

The 1st year of Refrigeration Fixture Manufacturer's Warranty is ALWAYS covered by Dunham-Bush's Standard One Year Warranty, thus Dunham-Bush covers the 1st year of the Manufacturer's Five (5) Year Warranty; this means that during the 1st year Dunham-Bush makes the exchange as a Dunham-Bush In-Warranty Exchange. (Wholesaler follows the procedure as is outlined in Paragraph "1".)

However, after the first year, but during the 2nd and thru the 5th year of the Manufacturer's Five (5) Year Warranty, Dunham-Bush and the Wholesaler treat the Exchange as an Out-Of-Warranty transaction, and the dealer can recover the Exchange Cost and two-way freight* cost from the Fixture Manufacturer, under the terms of the Fixture Manufacturer's Warranty. (Wholesaler follows procedure as is outlined in Paragraph "3").

IMPORTANT:

Complete Condensing Units are Not Exchangeable.

Out-of-Warranty exchange sale of a motor compressor will carry the D/B-Metic One Year Warranty commencing one year from the date of the exchange sale by either the wholesaler or Dunham-Bush.

B. STRAIGHT MOTOR-COMPRESSOR SALE

On straight motor-compressor sales, the selling price is determined by the Wholesaler at the established selling levels applicable to the class of the buyer.

*Freight Allowance by Dunham-Bush at lowest tariff rate.

C. VOIDING OF WARRANTY

The following misuses of D/B-Metic units will void the warranty of the unit. There will be no exception.

1. Use of a magnetic starter other than those types and sizes approved by Dunham-Bush. Hermetic motors, if not protected by inherent overload protectors, must be protected with magnetic starters with approved "quick-trip" overloads as specified.
2. Evidence of excessive moisture in motor-compressor, such as rusted or copper plated parts.
3. The use of any refrigerant other than that designated for the units.
4. The use of lubricating oil in the motor-compressor other than that designated for the unit.
5. The use of liquid anti-freeze or unapproved tracer chemicals in the system. (Dytel tracer chemical is authorized for use in Dunham-Bush systems. Request Service Bulletin SR125 for information as to its use and proper application).

6. Failure to adequately clean system following a motor burnout and before installing replacement motor-compressor.
7. Overloading a motor-compressor. Example: Use of a motor-compressor with a lower loading point, on an application which requires a compressor with a higher loading point.
8. Installation on a system which has been previously charged with Methyl Chloride or Sulphur Dioxide.
9. Operating a motor-compressor with an electrical supply other than that designated on the motor-compressor nameplate.
10. Running compressor without oil. This may happen on an installation where an oil separator should have been used or when suction lines and the system in general are not properly sized and designed.
11. Using a filter over a condenser that will reduce the air flow over the condenser.
12. Incorrect or insufficient water treatment.
13. a. Failure to use compressor cooling fans on low temperature R12 and R502 water-cooled and remote condenser applications as prescribed.
    b. Failure to use liquid injection on all low temperature R22 machines as prescribed.
14. Returning an inoperative compressor that is not properly sealed.
15. Failure to energize or utilize crankcase heater 24 hours prior to start-up, or during off cycles.

If the motor-compressor is found to be defective under the terms of the warranty, Dunham-Bush will authorize the Wholesaler to credit (or refund if a cash transaction) dealer with dealers cost, plus two-way freight.*

Dunham-Bush reserves the right to make the final decision as to the cause of failure, therefore, your Wholesaler will abide by Dunham-Bush's decision. (The Wholesaler owns his stock of D/B-Metic replacement motor-compressors and parts, therefore, if you disagree with the final disposition of the warranty claim, please write to the Service Department, Compressor Division of Dunham-Bush, Inc., West Hartford, Connecticut 06110).

EXCEPTIONS: Electrical Accessories (relays, overload protectors, capacitors and fan motors) will be exchangec by the Wholesaler to the customer's representative without charge upon surrender of the defective item during the first year following the date of installation.

Note: If for any reason, Dealer does not or cannot turn in the defective part at the time that the new part is obtained, or ordered and shipped, the Dealer's Exchange Cost for the replacement of the defective part will not apply, but the Sales Price (established by Wholesaler) for the part, will apply.

Credit differential between the Sales Price and Dealer's Exchange Cost will be made at the time that the Dealer turns in the defective part to the Wholesaler, providing not more than 10 working days intervene.

When corresponding in connection with your motor-compressor or parts and always when requesting parts for exchange under the D/B-Metic Standard One Year Warranty or the D/B-Metic Five Year Protection Plan you must furnish Condensing Unit Model, Type and Serial Numbers and Motor-Compressor Model, Type and Serial Numbers.

No exchanges under the warranty can be made by an Authorized Wholesaler without this information.

*Freight Allowance by Dunham-Bush at lowest tariff rate.

D. YOUR D/B-METIC WARRANTY

Your D/B-Metic compressor is protected for the first year after installation by Dunham-Bush, Inc., West Hartford, Conn. Standard One Year Warranty, provided the installation card is sent to Compressor Division of Dunham-Bush, Inc., or 18 months from date of shipment from the factory, whichever occurs first.

When corresponding in connection with your unit and always when requesting parts for exchange under the D/B-Metic Standard One Year Warranty, you must furnish Condensing Unit Model and Serial Numbers and Compressor Model and Serial Numbers.

No exchanges under the warranty can be made by an Authorized Wholesale Parts supplier without this information.

Warranty Department

Compressor Div., Dunham-Bush, Inc.,
West Hartford, Connecticut 06110

This Model _____ Serial No. _____ Compressor Refrigeration Unit has been received by the undersigned.

I (or we) have read and accept your warranty which was received with the aforesaid equipment.

Dealer's Name _____

By _____

Address _____

_____
(Print Name of Purchaser-User)

Address _____ Date _____

City or Town _____ State _____

To protect your equipment under this factory warranty, this receipt must be mailed to the Compressor Div. at West Hartford, Connecticut, within thirty days from date of installation of equipment. SIGN AND MAIL THIS CARD NOW.

FORM No G-166

Postage Will be Paid by Addressee

No Postage Stamp Necessary if Mailed in the United States

BUSINESS REPLY CARD

FIRST CLASS PERMIT NO 1684 SEC 34.9 P.L. & R. WEST HARTFORD CONN

DUNHAM-BUSH, INC.
179 SOUTH STREET
WEST HARTFORD, CONN. 06110

Attn.: Warranty Department

DUNHAM-BUSH

AIR CONDITIONING, REFRIGERATION, HEATING PRODUCTS AND ACCESSORIES

MAIN OFFICES

175 SOUTH STREET WEST HARTFORD, CONNECTICUT 06110

FACTORIES

WEST HARTFORD DIVISION
179 South Street
West Hartford, Connecticut
06110

HARRISONBURG DIVISION
101 Burgess Road
Harrisonburg, Virginia
22801

MARSHALLTOWN DIVISION
811 East Main Street
Marshalltown, Iowa
50158

RIVERSIDE DIVISION
1850 Massachusetts Ave.
Riverside, California
92507

SUBSIDIARIES

DUNHAM-BUSH of Canada Limited
140 Wendell Avenue
Weston, Ontario

DUNHAM-BUSH, LTD.
Fitzherbert Road, Farlington
Portsmouth, Hampshire, England

DUNHAM-BUSH INTERNATIONAL: 175 South Street, West Hartford, Connecticut 06110, U.S.A.
CABLE: DUNBUSH or TELEX: 994469

SALES OFFICES

ALABAMA
Birmingham
Mobile

ARIZONA
Phoenix

ARKANSAS
Little Rock

CALIFORNIA
Arcadia
Los Angeles
San Diego
San Francisco

COLORADO
Denver

CONNECTICUT
Hartford
New Haven

FLORIDA
Jacksonville
Miami
Orlando
Tampa

GEORGIA
Atlanta

HAWAII
Honolulu

ILLINOIS
Chicago
Peoria
Rockford

INDIANA
Indianapolis
Michigan City

IOWA
Des Moines

KANSAS
Lenexa

KENTUCKY
Louisville

LOUISIANA
New Orleans
Shreveport

MAINE
Lewiston

MARYLAND
Baltimore
Silver Spring

MASSACHUSETTS
Boston
Springfield

MICHIGAN
Detroit
Grand Rapids
Kalamazoo

MINNESOTA
Minneapolis

MISSISSIPPI
Jackson

MISSOURI
Kansas City
St. Louis

MONTANA
Billings
Great Falls

NEBRASKA
Omaha

NEW JERSEY
Little Falls
South Amboy
Union

NEW MEXICO
Albuquerque

NEW YORK
Albany
Buffalo
New York City
Rochester
Syracuse

NORTH CAROLINA
Charlotte
Greensboro

OHIO
Akron
Cincinnati
Cleveland
Columbus
Dayton
Delaware
Toledo

OKLAHOMA
Oklahoma City
Tulsa

OREGON
Portland

PENNSYLVANIA
Harrisburg
Philadelphia
Pittsburgh
Pittston

RHODE ISLAND
Providence

SOUTH CAROLINA
Columbia
Greenville

TENNESSEE
Chattanooga
Memphis
Knoxville
Nashville

TEXAS
Austin
Corpus Christie
Dallas
El Paso
Fort Worth
Houston
Lubbock
San Antonio

UTAH
Salt Lake City

VIRGINIA
Alexandria
Richmond

WASHINGTON
Seattle
Spokane

WEST VIRGINIA
Barboursville

WISCONSIN
Milwaukee

DUNHAM-BUSH, INC. • West Hartford, Connecticut 06110, U.S.A.

4130C-15M-1173B-179C

one of The Signal Companies

Exhibit 4-6

FORM NO. 6111D

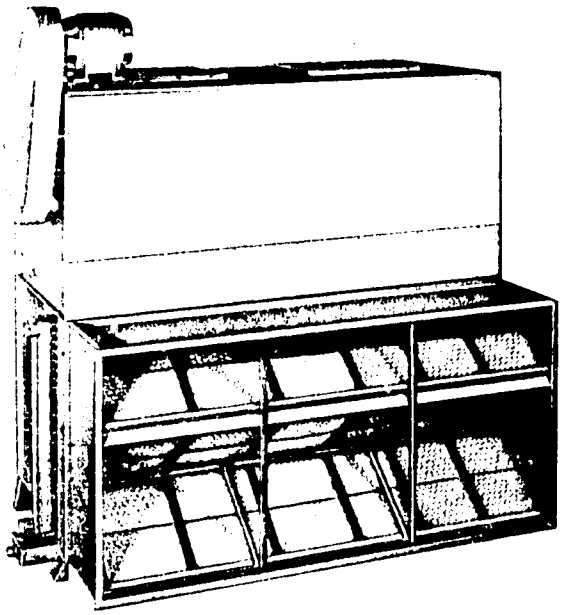

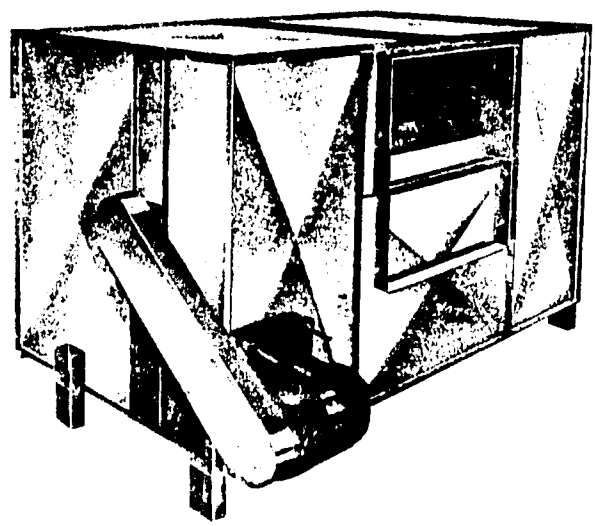

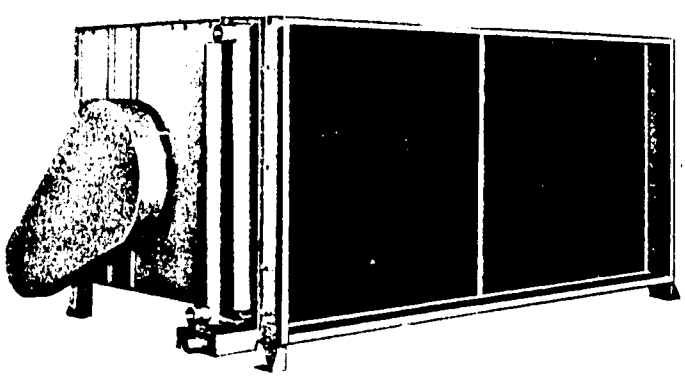

DUNHAM-BUSH

AHU AHMP AIR HANDLING UNITS FORWARD CURVED & AIR FOIL WHEELS

INSTALLATION, OPERATION AND MAINTENANCE INSTRUCTIONS

1135

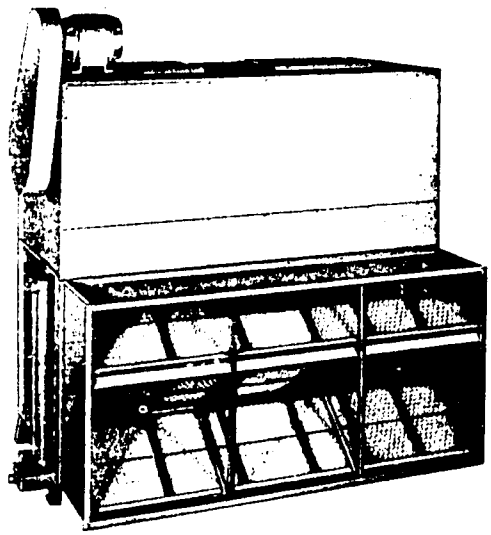

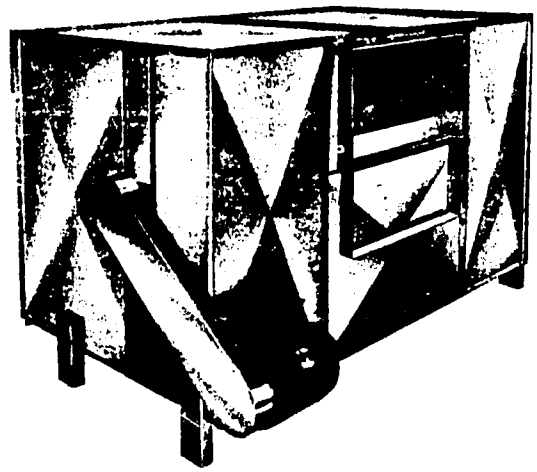

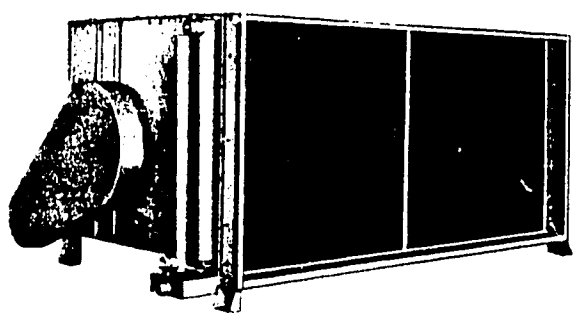

INDEX

General Information 3
Operating Instruction 3, 4
Vibration Isolator Location 4
'HAH' & 'HAHM' Floor Mounted Vibration Isolators
    Spring Mount 5
    Neoprene Mount 5
'HAH' & 'HAHM' Ceiling Mounted Vibration Isolators
    Spring Mount 6
    Neoprene Mount 6
'VAH' & 'VAHM' Floor Mounted Vibration Isolators
    Spring Mount 7
    Neoprene Mount 7
'HAH' Neoprene Vibration Isolator Chart – Ceiling Mount 8
'HAH' Spring Vibration Isolator Chart – Ceiling Mount 9
'HAH' Neoprene Vibration Isolator Chart – Floor Mount 10
'HAH' Spring Vibration Isolator Chart – Floor Mount 11
'VAH' Neoprene Vibration Isolator Chart 12
'VAH' Spring Vibration Isolator Chart 13
General Piping Parameters
    Hot Water Coil 14
    Steam Coil 14
Typical Condensate Piping 15

GENERAL INFORMATION

GENERAL

A visual inspection should be made upon receipt of unit(s) and accessories. They should be examined carefully for shipping damage when received from the carrier and in the presence of the carrier's representative. If there is any evidence of rough handling or damage, a notation should be made on the delivery receipt. Shipping damages are the responsibility of the carrier and it is the obligation of the customer to file a claim. If requested, Dunham-Bush will assist in the filing of the claim.

CONSTRUCTION

Air Handling Units are available in both horizontal floor mounted or ceiling suspended models and vertical floor mounted models. All models and sizes are constructed for sectional assembly. Foward curved and Air Foil wheel designs are available.

Construction is arranged to provide access to all important parts of the unit. Access panels are standard; access doors are optional.

ASSEMBLY & MOUNTING

Units are assembled by bolting the sections together using predrilled holes. Accessories such as filter sections, mixing boxes and face and bypass dampers are to be field assembled to the unit. When unit overall dimension is more than 90 inches in height or 86 inches in depth and width it will be shipped in two sections for field assembly.

Both horizontal and vertical units are provided with mounting legs which must be used. (When unit is shipped in sections, extra shipping legs are not required for unit support when assembled.) Horizontal units may either be hung from the ceiling by rods (secured to the main roof structure) extended thru the mounting legs, or they may be floor mounted on isolators. All vertical and high pressure units must be mounted directly on a floor or platform on the legs provided with the unit. In all cases the supporting structure should be checked for adequate strength.

FAN MOTOR MOUNTING

Adjustable fan motor mounting frames are located on the blower section casing. The motor, motor pulley, fan belts and fan guards are shipped separately for field mounting or completely assembled as an option if they do not cause unit height to exceed 90 inches or depth and width to exceed 86 inches. When motor and drive are mounted, the belt tension must be adjusted to properly drive the fan pulley. The pulleys are selected and adjusted to provide the blower speed necessary to meet the fan capacity conditions specified in the order. It is good practice when starting up the fan to measure the current draw of the motor during the start-up period. Also check fan rotation upon start-up.

CONDENSATE DRAIN CONNECTION

Drain lines should be the same size as the drain pan connection and must be adequately pitched and trapped. Refer to sketch on page 15 for piping recommendation.

COIL CONNECTION

All water, refrigerant and steam piping should be made in accordance with applicable local, state and national codes and must be in conformance with good practice required for proper operation of the coils.

If a coil is used for heating, and fresh air is introduced, a safety control must be provided to prevent the temperature of the water from approaching the freezing temperature. When fresh air is introduced into units having non-freeze type or standard steam type heating coils, where the temperature of the entering air can fall below 40°, a safety control should be installed. If the fin temperature on the side of the coil opposite the supply header drops below 40°, this control should turn off the fan or close the outside air dampers. If a heating coil is provided and a separate cooling coil is also provided, the water cooling coil must be completely drained during the heating season. To guarantee complete draining, it must be blown out with compressed air. The addition of an adequate anti-freeze solution to the cooling system to prevent the possibility of freeze-up is also satisfactory.

Externally equalized thermal expansion valves should be used with direct expansion coils furnished with Air Handling Units.

Water coils are provided with vent and drain fittings on the coil connections.

FILTERS

It is good practice to supply air filter with all Air Handling Units. If filter sections are provided with the units, adequate space must be allowed for removal of the filters from the side of the filter box. Fresh air intake to unit should be provided with louvers and screen.

DUCT CONNECTIONS

To prevent transmission of vibration from the unit to the ductwork, use flexible connections on the supply and return air ducts or the unit.

VIBRATION ISOLATORS

It is recommended that vibration isolator mountings be installed. The proper size and type designed for the particular size unit and arrangement must be used. Refer to pages 5 thru 7 or the drawings included with the unit.

OPERATING INSTRUCTIONS

An Air Handling Unit, as with any mechanical equipment, requires periodic maintenance. The following is a recommended "check list" to be used as a guide in establishing a maintenance program.

PERIODIC INSPECTION

1. Check the fan motor and fan shaft bearings to see that they are adequately lubricated. The shaft bearings are prelubricated and Zerk fittings are factory installed for

relubrication. Shaft bearings should normally be relubricated once a year as a minimum for applications where the units operate in a generally clean, dry atmosphere. Bearings in units for outdoor or industrial applications may require relubrication two or three times a year or as often as once a month for severe conditions.

Lubrication should be done when unit is not running and by means of a hand grease gun until grease purges through bearing so that a bead of grease appears at the seal lip contacts. The most important time for relubrication is before any prolonged storage or shutdown to flush out any foreign material and to prevent moisture from entering the bearing. The recommended grease is a lithium base water resistant type such as Alvania No. 3 by Shell Oil Company or its equivalent.

The fan motor should be lubricated in accordance with the manufacturer's recommendation or approximately every 5 years.

Caution should be exercised when lubricating bearings to be sure that no foreign matter gets into bearings.

2. Check the belts for proper tension and alignment at least once every six months. Proper belt tension depends on center to center between pulleys and type of belt used.

3. Check the pulleys and sheaves at least once every six months to make certain that set screws are properly tightened.

4. To insure proper air cleaning efficiency, filters must be properly maintained. Dirty filters will reduce the air volume handled by the unit which will result in reduced unit capacity. The length of time between the replacement of throwaway filters or cleaning of permanent type filters is dependent upon the condition of the recirculated air. A six week cycle is normal, however more frequent servicing may be required.

ANNUAL INSPECTION

1. If the unit is painted, check for evidence of corrosion or peeling. These areas should be properly cleaned and retouched.

2. Tighten the blower wheel set screws. Inspect the wheels and housings for evidence of corrosion and retouch if necessary.

3. Wash down the coil fin surfaces to eliminate dirt, lint or other foreign matter. If there is a particularly heavy accumulation of material, more frequent replacement or cleaning of filters is indicated.

4. Check the motor and fan shaft bearings for evidence of wear.

5. Check the drain pan and drain line to see that condensate is being properly drained and there are no restrictions in the line.

6. Replace all belts showing evidence of wear.

7. When cleanable type water coils are supplied, drain the water from the coils and remove several plugs from the return bends. Inspect the tubes carefully and if there is any evidence of scale formation, then remove all the plugs and clean the tubes. If chemicals are used for the cleaning operation it is recommended that a reputable water treatment firm be contacted for a recommendation of the proper cleaning agent to be used.

NOTE: It is recommended that all units be rebalanced to a minimum of "Quality Grade G6.3" if shaft or wheel is replaced.

'AH' UNITS, VIBRATION ISOLATOR LOCATIONS

PLAN VIEW OF HORIZONTAL UNIT

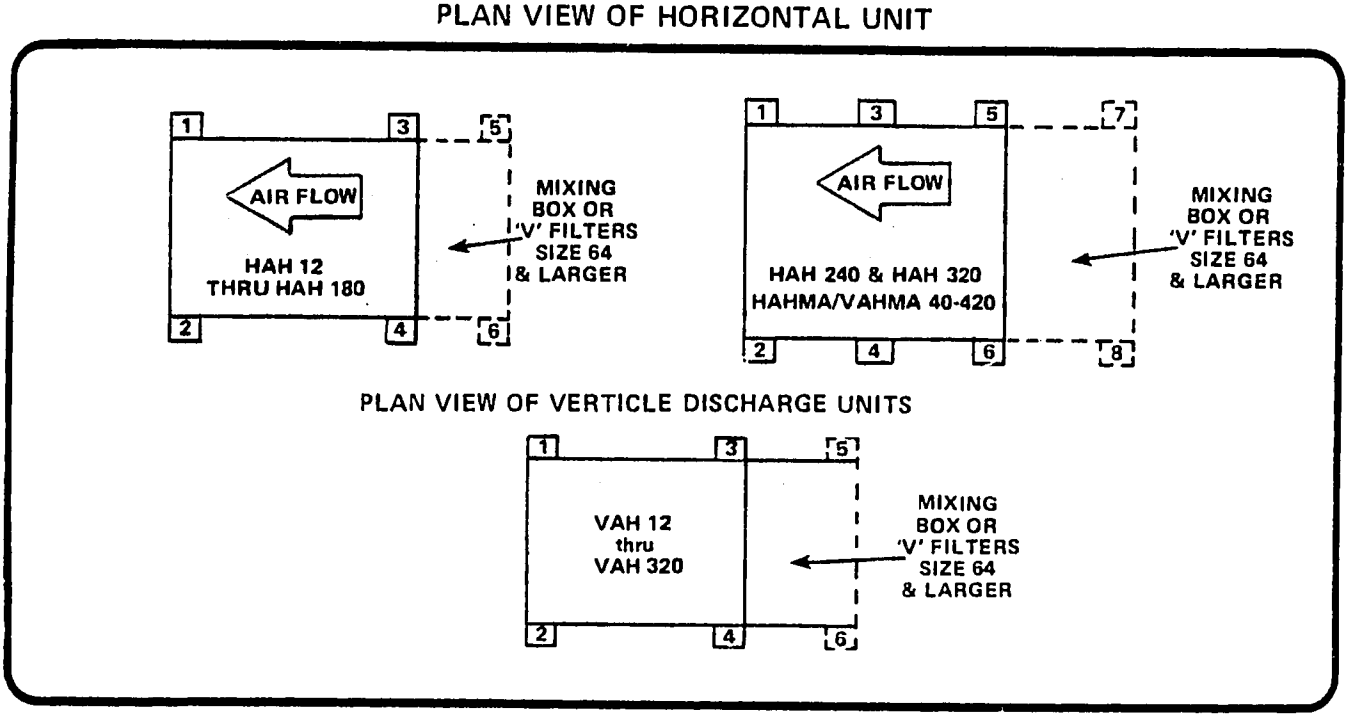

'HAH' & 'HAHM' HORIZONTAL AIR HANDLER VIBRATION ISOLATORS

(FOWARD CURVED WHEEL UNITS ONLY)*

FLOOR MOUNTING

UNIT SIZE	SPRING MOUNTS			NEOPRENE MOUNTS		
	SET NUMBER	(QTY.) & SIZE OF MOUNTS	SHIP WT.	SET NUMBER	(QTY.) & SIZE OF MOUNTS	SHIP WT.
12	DB-127	(4) SLFAH	4#	DB-150	(4) NDB	3#
22	DB-128					
32	DB-129					
40	DB-130	(4) SLFBH	20#	DB-152	(4) NDC	6#
48	DB-131	(4) SLFBH	20#			
64						
80						

UNIT SIZE	SPRING MOUNTS			NEOPRENE MOUNTS		
	SET NUMBER	(QTY.) & SIZE OF MOUNTS	SHIP WT.	SET NUMBER	(QTY.) & SIZE OF MOUNTS	SHIP WT.
100	DB-132	(4) SLFBH	20#	DB-152	(4) NDC	6#
120	DB-133					
150	DB-134					
180	DB-135					
240	DB-136	(5) SLFBH, (1) SLFCH	31#	DB-153	(2) NDC, (4) NDC	15#
320	DB-137	(3) SLFBH, (3) SLFCH	33#			

NOTE: MIXING BOX: WHEN MIXING BOX IS USED ADD THE LETTERS 'M.B.' AFTER THE SET NO. FOR UNIT SIZE 64 AND LARGER, I.E. DB-131MB.

SPRING MOUNT

SIZE	A	B	C	D	E DIA.	F. DIA.	OPER. HT. G
SLFAH	2 1/8	2 1/8	3	3 5/8	3/8	1/4	4 5/8
SLFBH	2 3/4	2 3/4	4 1/8	5 1/8	1/2	1/2	6 1/8
SLFPH	3 1/4	3 1/4	4 3/4	6	1/2	1/2	6 1/8
SLFBH-A	4	3	8	10 1/4	1/2	5/8	6 1/4
SLFCH-A	4	3	8	10 1/4	1/2	5/8	6 1/4

NEOPRENE MOUNT

SIZE	LOAD RANGE LBS.	MAX. DEPL.	DIMENSIONS							
			L	W	H	TH	BC	BD	T	D
NB WHITE	180-380	0.20	3 7/8	2 5/16	1 1/8	3/8	3	11/32	1/4	1 3/4
NC YELLOW	520-1000	0.25	5 1/2	3 5/16	1 5/8	1/2	4 1/8	9/16	1/4	2 9/16
NDB YELLOW	50-650	0.40	3 7/8	2 5/16	1 7/8	3/8	3	11/32	1/4	1 3/4
NDC YELLOW	520-1000	0.50	5 1/2	3 5/16	2 3/4	1/2	4 1/8	9/16	1/4	2 9/16

SPRING MOUNTS

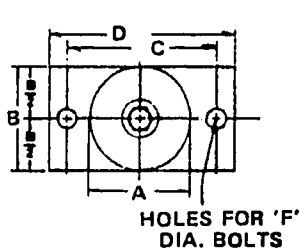

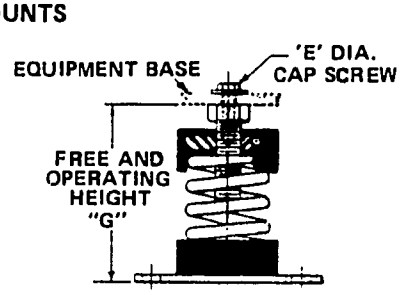

NEOPRENE MOUNT

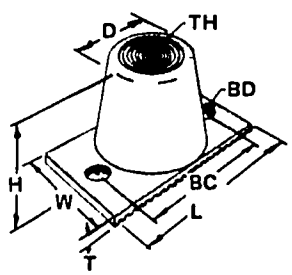

*FOR UNITS WITH AIR FOIL WHEEL, REFER TO DRAWING PACKED WITH ISOLATORS.

'HAH' & 'HAHM' HORIZONTAL AIR HANDLER VIBRATION ISOLATORS

(FOWARD CURVED WHEEL UNITS ONLY)*

CEILING MOUNTING

UNIT SIZE	SPRING HANGERS			NEOPRENE HANGERS		
	SET NUMBER	(QTY.) & SIZE OF MOUNTS	SHIP WT.	SET NUMBER	(QTY.) & SIZE OF MOUNTS	SHIP WT.
12	DB-154	(4) HSA	8#	DB-176	(4) HDB	8#
22	DB-155					
32	DB-156					
40	DB-157	(4) HSB	16#	DB-177	(4) HDC	12#
48	DB-158	(4) HSB	16#			
64						
80						

UNIT SIZE	SPRING HANGERS			NEOPRENE HANGERS		
	SET NUMBER	(QTY.) & SIZE OF MOUNTS	SHIP WT.	SET NUMBER	(QTY.) & SIZE OF MOUNTS	SHIP WT.
100	DB-159	(4) HSB	16#	DB-177	(4) HDC	12#
120	DB-160					
150	DB-161					
180	DB-162					
240	DB-163	(5) HSB, (1) HSC	26#	DB-178	(2) HDC,(4) HDD	26#
320	DB-164	(3) HSB, (3) HSC	31#	DB-178	(2) HDC,(4) HDD	26#

NOTE: MIXING BOX: WHEN MIXING BOX IS USED ADD THE LETTERS 'M.B.' AFTER THE SET NO.64 AND LARGER FOR UNIT SIZE I.E. DB-158 MB.

SIZE	LOAD RANGE LBS.	MAX. DEFL.	DIMENSIONS				
			H	W	D	MH	MRD
HDB YELLOW	50-650	0.40	4½	4¼	3¼	2⅛	¾
HDC YELLOW	520-1000	0.50	4½	4¼	3¼	3	¾
HDD YELLOW	900-2100	0.50	6¼	4¾	4	2¾	⅞

DIMENSIONS					
HANGERS	H	W	D	SH	MRD
HSA	5 1/2	3 1/4	2 3/4	3 3/4	5/8
HSB	7 1/2	4 3/4	4	4 3/4	3/4
HSC	7 1/2	5 1/4	4	4 7/8	3/4
HSD	13 1/4	10	5	4 7/8	1
HSE	13 1/2	8 3/8	6	6 1/2	1 1/4
HSD hangers have 2 springs HSE hangers have 4 springs					

NEOPRENE HANGERS

(MRD) MAX. ROD DIA. RODS BY OTHERS

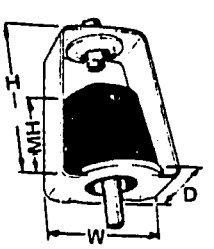

SPRING HANGERS

(MRD) MAX. ROD DIA. RODS BY OTHERS

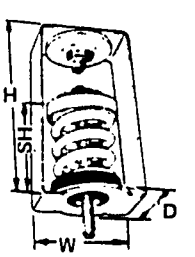

*FOR UNITS WITH AIR FOIL WHEEL, REFER TO DRAWING PACKED WITH ISOLATORS.

1140

'VAH' & 'VAHM' VERTICAL AIR HANDLER VIBRATION ISOLATORS

(FORWARD CURVED WHEEL UNITS ONLY)*

FLOOR MOUNTING

UNIT SIZE	SPRING MOUNTS			NEOPRENE MOUNTS		
	SET NUMBER	(QTY.) & SIZE OF MOUNTS	SHIP WT.	SET NUMBER	(QTY.) & SIZE OF MOUNTS	SHIP WT.
12	DB-189	(4) SLFAH	4#	DB-150	(4) NDB	3#
22	DB-190					
32	DB-191					
40	DB-192	(4) SLFBH	20#			
48	DB-193			DB-152	(4) NDC	6#
64	DB-194					
80	DB-195					
100	DB-196					

UNIT SIZE	SPRING MOUNTS			NEOPRENE MOUNTS		
	SET NUMBER	(QTY.) & SIZE OF MOUNTS	SHIP WT.	SET NUMBER	(QTY.) & SIZE OF MOUNTS	SHIP WT.
120.	DB-197	(2) SLFBH, (2) SLFCH	22#	DB-258	(2) NDC, (2) NDD	9#
150	DB-198					
180	DB-199	(4) SLFCH	24#	DB-215	(4) NDD	12#
240	DB-200	(4) SLFCH	24#			
320	DB-201					

NOTE: VAH UNITS. MIXING BOX : WHEN MIXING BOX IS USED ADD LETTERS 'M.B.' AFTER THE SET NO. FOR UNIT SIZE 64 AND LARGER I. E. DB-194MB.

SPRING FLOOR MOUNT

DIM SIZE	A	B	C	D	E DIA.	F DIA.	OPER. HT. G
SLFAH	2 1/8	2 1/8	3	3 5/8	3/8	1/4	4 5/8
SLFBH	2 3/4	2 3/4	4 1/8	5 1/8	1/2	1/2	6 1/8
SLFCH	3 1/4	3 1/4	4 3/4	6	1/2	1/2	6 1/8
SLFBH-A	4	3	8	10 1/4	1/2	5/8	6 1/4
SLFCH-A	4	3	8	10 1/4	1/2	5/8	6 1/4

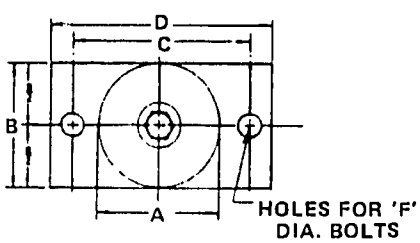

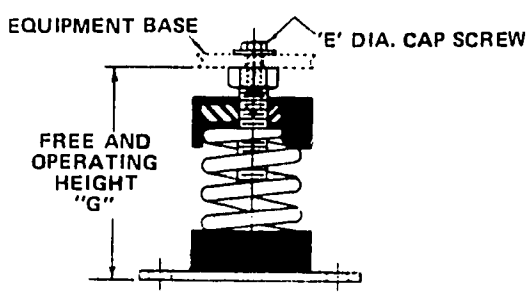

NEOPRENE FLOOR MOUNT

SIZE	LOAD RANGE LBS.	MAX. DEFL.	DIMENSIONS							
			L	W	H	TH	BC	BD	T	D
NB WHITE	180-380	0.20	3 7/8	2 5/16	1 1/8	3/8	3	11/32	1/4	1 3/4
NC YELLOW	520-1000	0.25	5 1/2	3 5/16	1 5/8	1/2	4 1/8	9/16	1/4	2 9/16
NDB YELLOW	50-650	0.40	3 7/8	2 5/16	1 7/8	3/8	3	11/32	1/4	1 3/4
NDC YELLOW	520-1000	0.50	5 1/2	3 5/16	2 3/4	1/2	4 1/8	9/16	1/4	2 9/16
NDD YELLOW	900-2100	0.50	6 1/4	4	2 3/4	1/2	5	9/16	1/4	3 3/8

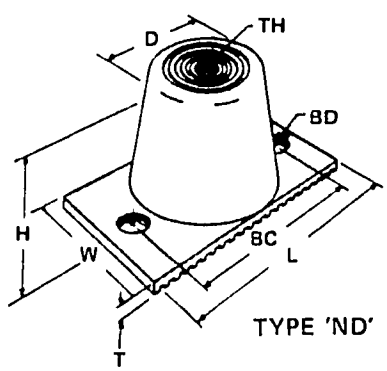

*FOR UNITS WITH AIR FOIL WHEEL, REFER TO DRAWING PACKED WITH ISOLATORS.

HORIZONTAL CEILING MOUNTED AIR HANDLER NEOPRENE VIBRATION ISOLATOR CHART

(FORWARD CURVED WHEEL UNITS ONLY)*

UNIT MODEL	TYPE AND QUANTITY†			MOUNT POSITION††							
	HDB	HDC	HDD	1	2	3	4	5	6	7	8
HAH 12	4			HDB Yellow	HDB Yellow	HDB Yellow	HDB Yellow				
HAH 22	4			HDB Yellow	HDB Yellow	HDB Yellow	HDB Yellow				
HAH 32	4			HDB Yellow	HDB Yellow	HDB Yellow	HDB Yellow				
HAH 40		4		HDC Yellow	HDC Yellow	HDC Yellow	HDC Yellow				
HAH 48		4		HDC Yellow	HDC Yellow	HDC Yellow	HDC Yellow				
HAH 64		4		HDC Yellow	HDC Yellow	HDC Yellow	HDC Yellow	HDC Yellow	HDC Yellow		
HAH 80		4		HDC Yellow	HDC Yellow	HDC Yellow	HDC Yellow	HDC Yellow	HDC Yellow		
HAH 100		4		HDC Yellow	HDC Yellow	HDC Yellow	HDC Yellow	HDC Yellow	HDC Yellow		
HAH 120		4		HDC Yellow	HDC Yellow	HDC Yellow	HDC Yellow	HDC Yellow	HDC Yellow		
HAH 150		4		HDC Yellow	HDC Yellow	HDC Yellow	HDC Yellow	HDC Yellow	HDC Yellow		
HAH 180		4		HDC Yellow	HDC Yellow	HDC Yellow	HDC Yellow	HDC Yellow	HDC Yellow		
HAH 240		2	4	HDD Yellow	HDD Yellow	HDD Yellow	HDD Yellow	HDC Yellow	HDC Yellow	HDC Yellow	HDC Yellow
HAH 320		2	4	HDD Yellow	HDD Yellow	HDD Yellow	HDD Yellow	HDC Yellow	HDC Yellow	HDC Yellow	HDC Yellow

NOTE: For Locations of Vibration Isolators Refer to Page 4

† Quantity Specified Represents Amount and Type necessary for Unit Without Mixing Box or 'V' Filter Section

†† Type and Position are Specified for Unit and Mixing Box or 'V' Filter Section. VAH 12 thru VAH 48 do not Require Mounts for Mixing Box or 'V' Filter Section.

* For units with airfoil wheel, refer to drawing packed with isolators.

HORIZONTAL CEILING MOUNTED AIR HANDLER
SPRING VIBRATION ISOLATOR CHART

(FORWARD CURVED WHEEL UNITS ONLY)*

UNIT MODEL	TYPE AND QUANTITY†			MOUNT POSITION††							
	HSA	HSB	HSC	1	2	3	4	5	6	7	8
HAH 12	4			HSA 125	HSA 125	HSA 200	HSA 200				
HAH 22	4			HSA 200	HSA 200	HSA 310	HSA 310				
HAH 32	4			HSA 200	HSA 200	HSA 310	HSA 310				
HAH 40		4		HSB 280	HSB 280	HSB 450	HSB 450				
HAH 48		4		HSB 280	HSB 450	HSB 750	HSB 750				
HAH 64		4		HSB 280	HSB 450	HSB 750	HSB 750	HSB 140	HSB 140		
HAH 80		4		HSB 280	HSB 450	HSB 750	HSB 750	HSB 140	HSB 140		
HAH 100		4		HSB 450	HSB 750	HSB 750	HSB 750	HSB 140	HSB 140		
HAH 120		4		HSB 750	HSB 750	HSB 1000	HSB 1000	HSB 280	HSB 280		
HAH 150		4		HSB 750	HSB 1000	HSB 1000	HSB 1000	HSB 280	HSB 280		
HAH 180		4		HSB 750	HSB 1000	HSB 1000	HSB 1000	HSB 280	HSB 280		
HAH 240		5	1	HSB 1000	HSC 1350	HSB 1000	HSB 1000	HSB 750	HSB 750	HSB 450	HSB 450
HAH 320		3	3	HSB 1000	HSC 1675	HSC 1350	HSC 1350	HSB 1000	HSB 1000	HSB 750	HSB 750

NOTE: For Locations of Vibration Isolators Refer to Page 4

† Quantity Specified Represent Amount and Type Necessary for Unit Without Mixing Box or 'V' Filter Section

†† Type and Position are Specified for Unit and Mixing Box or 'V' Filter Section. HAH 12 thru HAH 48 Do Not Require Mounts for Mixing Box or 'V' Filter Section

* For units with airfoil wheel, refer to drawing packed with isolators.

HORIZONTAL FLOOR MOUNTED AIR HANDLER SPRING VIBRATION ISOLATOR CHART

(FORWARD CURVED WHEEL UNITS ONLY)*

UNIT MODEL	TYPE AND QUANTITY†			MOUNT POSITION††							
	SLFAH	SLFBH	SLFCH	1	2	3	4	5	6	7	8
HAH 12	4			SLFAH Brown	SLFAH Brown	SLFAH Black	SLFAH Black				
HAH 22	4			SLFAH Black	SLFAH Black	SLFAH Yellow	SLFAH Yellow				
HAH 32	4			SLFAH Black	SLFAH Black	SLFAH Yellow	SLFAH Yellow				
HAH 40		4		SLFBH Green	SLFBH Green	SLFBH Red	SLFBH Red				
HAH 48		4		SLFBH Green	SLFBH Red	SLFBH White	SLFBH White				
HAH 64		4		SLFBH Green	SLFBH Red	SLFBH White	SLFBH White	SLFBH Orange	SLFBH Orange		
HAH 80		4		SLFBH Green	SLFBH Red	SLFBH White	SLFBH White	SLFBH Orange	SLFBH Orange		
HAH 100		4		SLFBH Red	SLFBH White	SLFBH White	SLFBH White	SLFBH Orange	SLFBH Orange		
HAH 120		4		SLFBH White	SLFBH White	SLFBH Blue	SLFBH Blue	SLFBH Green	SLFBH Green		
HAH 150		4		SLFBH White	SLFBH Blue	SLFBH Blue	SLFBH Blue	SLFBH Green	SLFBH Green		
HAH 180		4		SLFBH White	SLFBH Blue	SLFBH Blue	SLFBH Blue	SLFBH Green	SLFBH Green		
HAH 240		5	1	SLFBH Blue	SLFCH Yellow	SLFBH Blue	SLFBH Blue	SLFBH Red	SLFBH Red	SLFBH White	SLFBH White
HAH 320		3	3	SLFBH Blue	SLFCH Gray - Yellow	SLFCH Yellow	SFLCH Yellow	SLFBH Blue	SLFBH Blue	SLFBH White	SLFBH White

NOTE: For Locations of Vibration Isolators Refer to Page 4

† Quantity Specified Represents Amount and Type Necessary for Unit Without Mixing Box or 'V' Filter Section.

†† Type and Position are Specified for Unit and Mixing Box or 'V' Filter Section. HAH 12 thru HAH 48 Do Not Require Mounts for Mixing Box or 'V' Filter Section.

* For units with airfoil wheel, refer to drawing packed with isolators.

HORIZONTAL FLOOR MOUNTED AIR HANDLER SPRING VIBRATION ISOLATOR CHART

(FORWARD CURVED WHEEL UNITS ONLY)*

UNIT MODEL	TYPE AND QUANTITY†			MOUNT POSITION††							
	SLFAH	SLFBH	SLFCH	1	2	3	4	5	6	7	8
HAH 12	4			SLFAH Brown	SLFAH Brown	SLFAH Black	SLFAH Black				
HAH 22	4			SLFAH Black	SLFAH Black	SLFAH Yellow	SLFAH Yellow				
HAH 32	4			SLFAH Black	SLFAH Black	SLFAH Yellow	SLFAH Yellow				
HAH 40		4		SLFBH Green	SLFBH Green	SLFBH Red	SLFBH Red				
HAH 48		4		SLFBH Green	SLFBH Red	SLFBH White	SLFBH White				
HAH 64		4		SLFBH Green	SLFBH Red	SLFBH White	SLFBH White	SLFBH Orange	SLFBH Orange		
HAH 80		4		SLFBH Green	SLFBH Red	SLFBH White	SLFBH White	SLFBH Orange	SLFBH Orange		
HAH 100		4		SLFBH Red	SLFBH White	SLFBH White	SLFBH White	SLFBH Orange	SLFBH Orange		
HAH 120		4		SLFBH White	SLFBH White	SLFBH Blue	SLFBH Blue	SLFBH Green	SLFBH Green		
HAH 150		4		SLFBH White	SLFBH Blue	SLFBH Blue	SLFBH Blue	SLFBH Green	SLFBH Green		
HAH 180		4		SLFBH White	SLFBH Blue	SLFBH Blue	SLFBH Blue	SLFBH Green	SLFBH Green		
HAH 240		5	1	SLFBH Blue	SLFCH Yellow	SLFBH Blue	SLFBH Blue	SLFBH Red	SLFBH Red	SLFBH White	SLFBH White
HAH 320		3	3	SLFBH Blue	SLFCH Gray - Yellow	SLFCH Yellow	SFLCH Yellow	SLFBH Blue	SLFBH Blue	SLFBH White	SLFBH White

NOTE: For Locations of Vibration Isolators Refer to Page 4

† Quantity Specified Represents Amount and Type Necessary for Unit Without Mixing Box or 'V' Filter Section.

†† Type and Position are Specified for Unit and Mixing Box or 'V' Filter Section. HAH 12 thru HAH 48 Do Not Require Mounts for Mixing Box or 'V' Filter Section.

* For units with airfoil wheel, refer to drawing packed with isolators.

VERTICAL FLOOR MOUNTED AIR HANDLER NEOPRENE VIBRATION ISOLATOR CHART

(FORWARD CURVED WHEEL UNITS ONLY)*

UNIT MODEL	TYPE AND QUANTITY†			MOUNT POSITION††							
	NDB	NDC	NDD	1	2	3	4	5	6	7	8
VAH 12	4			NDB Yellow	NDB Yellow	NDB Yellow	NDB Yellow				
VAH 22	4			NDB Yellow	NDB Yellow	NDB Yellow	NDB Yellow				
VAH 32	4			NDB Yellow	NDB Yellow	NDB Yellow	NDB Yellow				
VAH 40	4			NDB Yellow	NDB Yellow	NDB Yellow	NDB Yellow				
VAH 48		4		NDC Yellow	NDC Yellow	NDC Yellow	NDC Yellow				
VAH 64		4		NDC Yellow	NDC Yellow	NDC Yellow	NDC Yellow	NDC Yellow	NDC Yellow		
VAH 80		4		NDC Yellow	NDC Yellow	NDC Yellow	NDC Yellow	NDC Yellow	NDC Yellow		
VAH 100		4		NDC Yellow	NDC Yellow	NDC Yellow	NDC Yellow	NDC Yellow	NDC Yellow		
VAH 120		2	2	NDC Yellow	NDC Yellow	NDD Yellow	NDD Yellow	NDC Yellow	NDC Yellow		
VAH 150		2	2	NDC Yellow	NDC Yellow	NDD Yellow	NDD Yellow	NDC Yellow	NDC Yellow		
VAH 180			4	NDD Yellow	NDD Yellow	NDD Yellow	NDD Yellow	NDC Yellow	NDC Yellow		
VAH 240			4	NDD Yellow	NDD Yellow	NDD Yellow	NDD Yellow	NDC Yellow	NDC Yellow		
VAH 320			4	NDD Yellow	NDD Yellow	NDD Yellow	NDD Yellow	NDC Yellow	NDC Yellow		

NOTE: For Location of Vibration Isolators Refer to Page 4

† Quantity Specified Represents Amount and Type Necessary for Unit Without Mixing Box or 'V' Filter Section.

†† Type and Position are Specified for Unit and Mixing Box or 'V' Filter Section. VAH 12 thru VAH 48 Do Not Require Mounts for Mixing Box or 'V' Filter Section.

* For units with airfoil wheel, refer to drawing packed with isolators.

VERTICAL FLOOR MOUNTED AIR HANDLER SPRING VIBRATION ISOLATOR CHART

(FORWARD CURVED WHEEL UNITS ONLY)*

UNIT MODEL	TYPE AND QUANTITY †			MOUNT POSITION ††							
	SLFAH	SLFBH	SLFCH	1	2	3	4	5	6	7	8
VAH 12	4			SLFAH Black	SLFAH Black	SLFAH Black	SLFAH Black				
VAH 22	4			SLFAH Black	SLFAH Black	SLFAH Yellow	SLFAH Yellow				
VAH 32	4			SLFAH Yellow	SLFAH Yellow	SLFAH Yellow	SLFAH Yellow				
VAH 40		4		SLFBH Red	SLFBH Red	SLFBH Red	SLFBH Red				
VAH 48		4		SLFBH Red	SLFBH Red	SLFBH White	SLFBH White				
VAH 64		4		SLFBH White	SLFBH White	SLFBH White	SLFBH White	SLFBH Orange	SLFBH Orange		
VAH 80		4		SLFBH White	SLFBH White	SLFBH Blue	SLFBH Blue	SLFBH Orange	SLFBH Orange		
VAH 100		4		SLFBH Blue	SLFBH Blue	SLFBH Blue	SLFBH Blue	SLFBH Orange	SLFBH Orange		
VAH 120		2	2	SLFBH Blue	SLFBH Blue	SLFCH Yellow	SLFCH Yellow	SLFBH Green	SLFBH Green		
VAH 150		2	2	SLFBH Blue	SLFBH Blue	SLFCH Yellow	SLFCH Yellow	SLFBH Green	SLFBH Green		
VAH 180			4	SLFCH Yellow	SLFCH Yellow	SLFCH Grey - Yellow	SLFCH Grey - Yellow	SLFBH Green	SLFBH Green		
VAH 240			4	SLFCH Grey - Yellow	SLFCH Grey - Yellow	SLFCH Red - Yellow	SLFCH Red - Yellow	SLFBH Red	SLFBH Red		
VAH 320			4	SLFCH Red - Yellow	SLFCH Red - Yellow	SLFCH Red - Yellow	SLFCH Red - Yellow	SLFCH White	SLFCH White		

NOTE: For Location of Vibration Isolators Refer to Page 4

† Quantity Specified Represents Amount and Type Necessary for Unit Without Mixing Box or 'V' Filter Section.

†† Type and Position are Specified for Unit and Mixing Box or 'V' Filter Section. VAH 12 thru VAH 48 Do Not Require Mounts for Mixing Box or 'V' Filter Section.

* For units with airfoil wheel, refer to drawing packed with isolators.

GENERAL PIPING PARAMETERS—HOT WATER COILS

The following precautions should be noted with regard to the piping layout for hot water coils:

1. All coils should be connected to provide adequate venting and drainage.
2. Thermometers are recommended to provide temperature readings when coils are balanced.
3. a. Plug cocks are used to manually adjust the water flow for a set pressure drop through the coil.
   b. The pressure drop is determined by connecting pressure gages to the gage cocks.
4. The leaving air temperature from the coil (in this piping layout) is maintained by automatically proportioning the amount of water flowing thru the coil or thru the bypass. The water flow is regulated by a motorized 3 way mixing valve, controlled thru a proportional remote bulb temperature controller.
5. A gate valve and hose connection provided in the supply line dirt leg should be supplied when floor drains are remote in relation to the coil location.
6. Water piping and coil section should be supported independently.

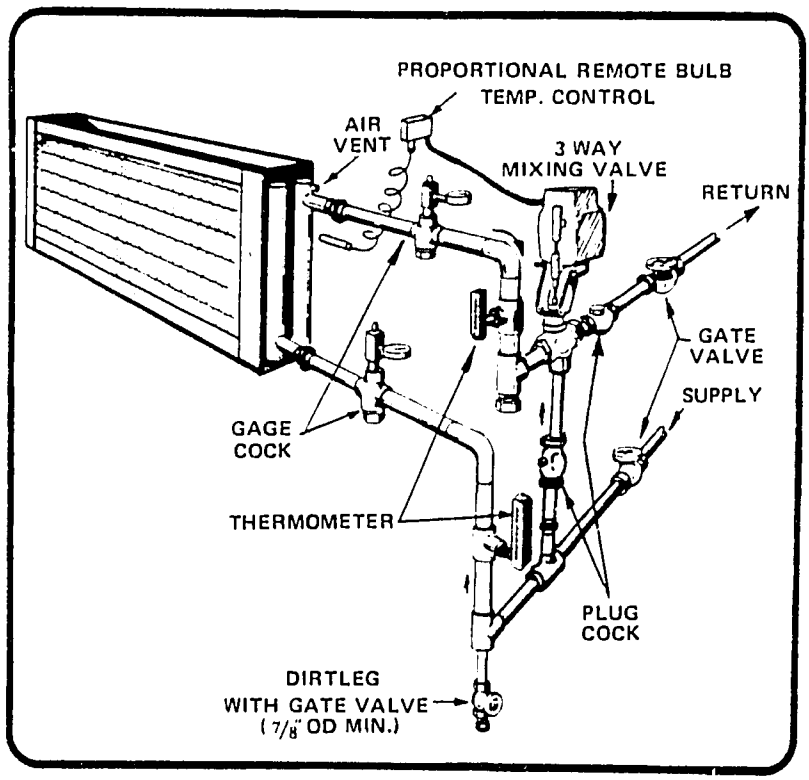

GENERAL PIPING PARAMETERS—STEAM COILS

(MEDIUM OR HIGH PRESSURE SYSTEMS)

The following precautions should be noted with regard to the piping layout for steam coils:

1. Return piping from coil to trap should be of at least the same size as the coil outlet connection.
2. Steam piping and coil section should be supported independently.
3. The sizing of control valves should be based on the steam load and not on the coil supply connection size.
4. Thermostatic traps should be used for venting only.
5. A strainer should be provided on the steam supply side of the control valve.
6. Locate traps at least 12 inches below the coil return connection.
7. Where handling outside air below 35°F the following precautions must be followed.
   a. Proper draining is mandatory to avoid damage by freezing.
   b. Do not use overhead returns from coils.
   c. An immersion thermostat should be used to protect the coil. The device controls the outdoor air damper and fan motor when the steam supply fails or condensate temperature drops below a pre-set level. Thermostat is located in the return line before the dirt leg.

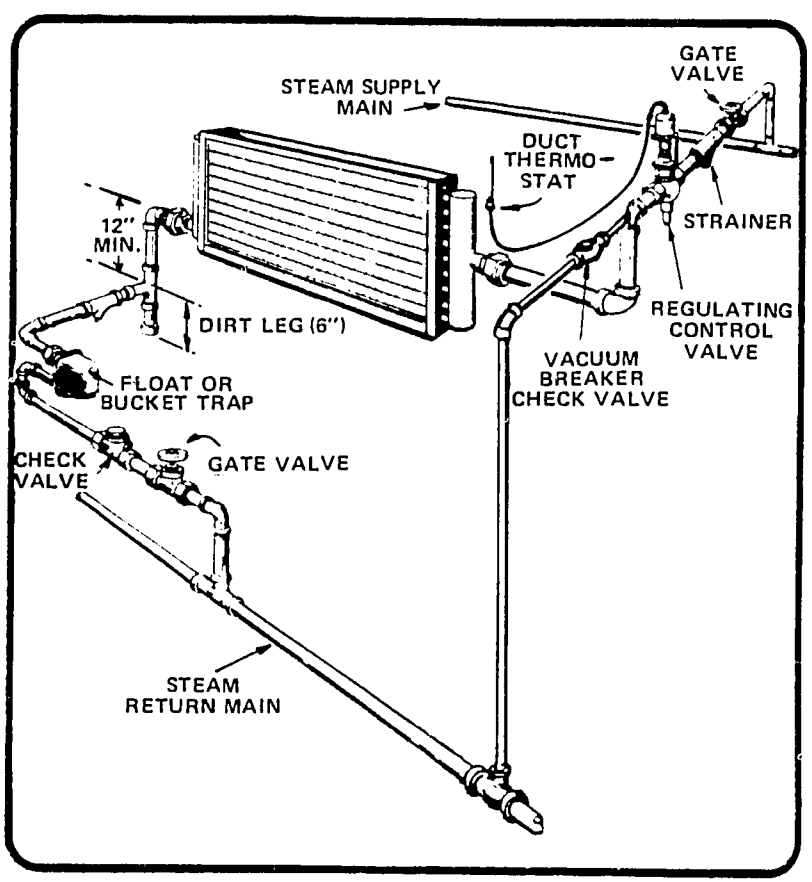

TYPICAL CONDENSATE PIPING

"AH" UNIT CONDENSATE PIPING SHOWING
TRAP WATER LEVEL WITH UNIT OFF

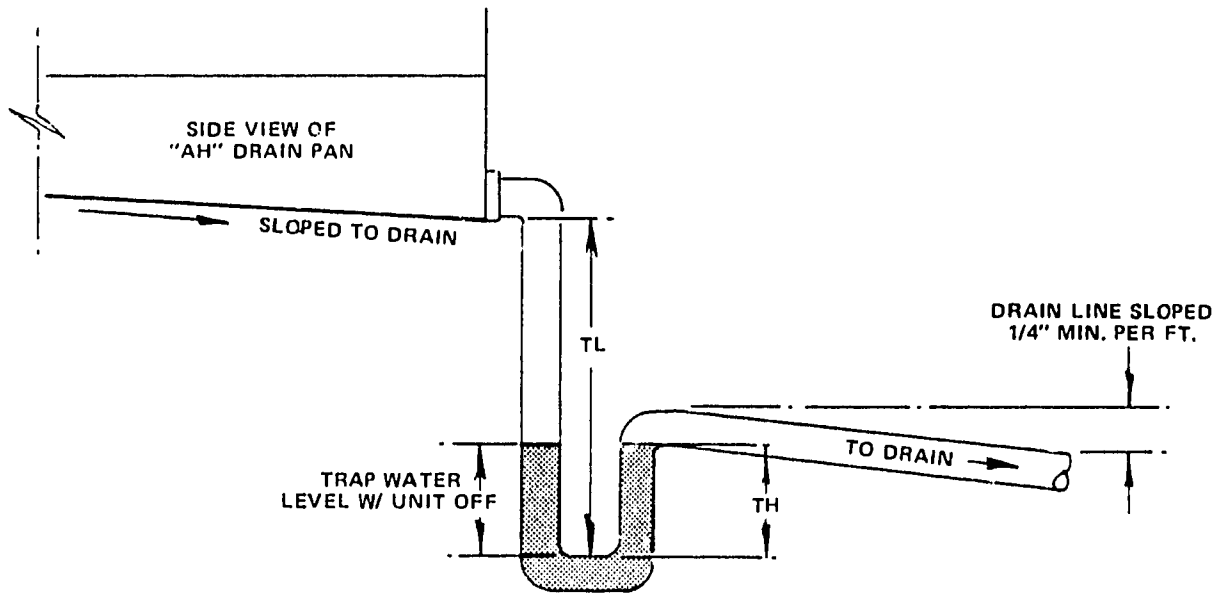

"AH" UNIT CONDENSATE PIPING SHOWING
TRAP WATER LEVEL WITH UNIT RUNNING

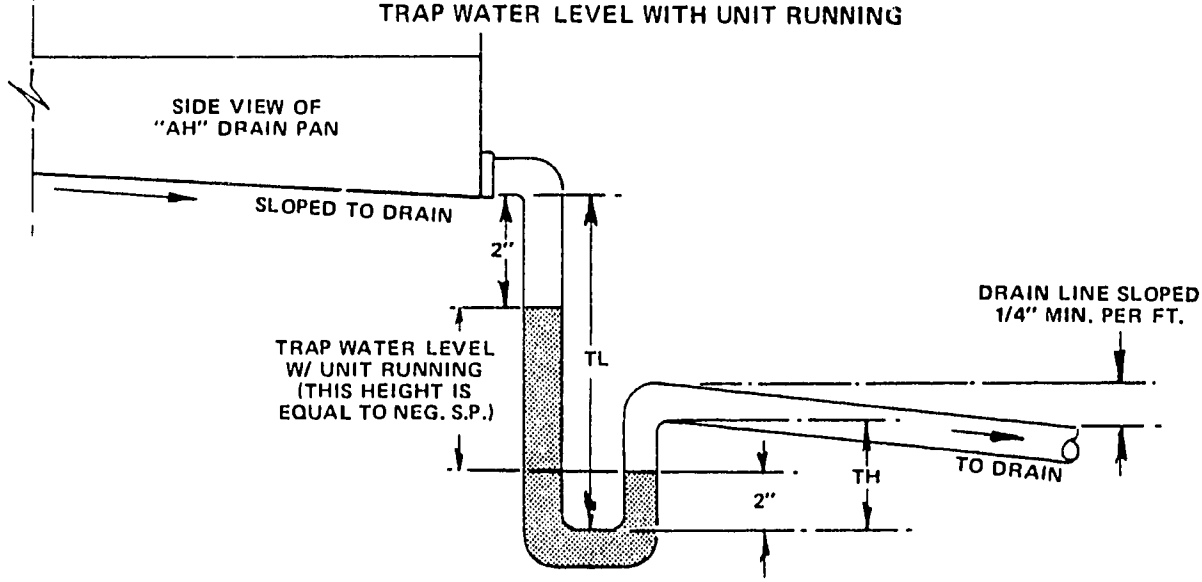

DRAINS MUST BE PROPERLY TRAPPED.

DRAINS LEAVING THE TRAP MUST NOT RISE & SHOULD BE SLOPED 1/4" PER FOOT OR MORE, AND DRAIN INTO A FREE DRAIN.

TRAP HEIGHTS T.H. & T.L. ARE BASED ON MAXIMUM NEGATIVE STATIC PRESSURE (NEG. S.P.) WHICH MUST INCLUDE THE INCREASE IN STATIC PRESSURE FOR DIRTY FILTERS (FILTERS READY FOR NORMAL CHANGE OUT).

THE TRAP HEIGHT (T.H.) MUST BE AS LONG AS CALCULATED IN THE FORMULA BELOW. ANY INCREASE IN THIS LENGTH MUST ALSO BE ADDED TO THE TRAP LEG HEIGHT (T.L.).

T.H. = NEG. S.P. + 2"

THE T.L. LENGTH MUST BE AS LONG AS SHOWN IN FORMULAE OR LONGER:

T. L. = (NEG. S.P.) + 2" + 2"

ABBREVIATIONS:

T.L. = TRAP LEG HEIGHT
T.H. = TRAP HEIGHT
NEG. S.P. = NEGATIVE STATIC PRESSURE (INCHES WG)

DUNHAM-BUSH

AIR CONDITIONING, REFRIGERATION, HEATING PRODUCTS AND ACCESSORIES

MAIN OFFICES

175 SOUTH STREET WEST HARTFORD, CONNECTICUT 06110

FACTORIES

WEST HARTFORD DIVISION
179 South Street
West Hartford, Connecticut
06110

HARRISONBURG DIVISION
101 Burgess Road
Harrisonburg, Virginia
22801

MARSHALLTOWN DIVISION
811 East Main Street
Marshalltown, Iowa
50158

RIVERSIDE DIVISION
1850 Massachusetts Ave.
Riverside, California
92507

SUBSIDIARIES

DUNHAM-BUSH of Canada Limited
140 Wendell Avenue
Weston, Ontario

DUNHAM-BUSH, LTD.
Fitzherbert Road, Farlington
Portsmouth, Hampshire, England

DUNHAM-BUSH INTERNATIONAL: 175 South Street, West Hartford, Connecticut 06110, U.S.A.
CABLE: DUNBUSH or TELEX: 994469

SALES OFFICES

ALABAMA
Birmingham
Mobile

ARIZONA
Phoenix

ARKANSAS
Little Rock

CALIFORNIA
Arcadia
Los Angeles
Sacramento
San Diego
San Francisco

COLORADO
Denver

CONNECTICUT
Hartford
Bloomfield

FLORIDA
Clearwater
Jacksonville
Miami
Orlando

GEORGIA
Atlanta

HAWAII
Honolulu

ILLINOIS
Chicago
Peoria
Rockford

INDIANA
Indianapolis
Michigan City

IOWA
Des Moines

KANSAS
Lenexa

KENTUCKY
Louisville

LOUISIANA
New Orleans
Shreveport

MAINE
Lewiston

MARYLAND
Baltimore
Silver Spring

MASSACHUSETTS
Boston
Springfield

MICHIGAN
Detroit
Grand Rapids
Kalamazoo

MINNESOTA
Minneapolis

MISSISSIPPI
Jackson

MISSOURI
Kansas City
St. Louis

MONTANA
Billings
Great Falls

NEBRASKA
Omaha

NEW JERSEY
Hazlet
Little Falls
Union

NEW MEXICO
Albuquerque

NEW YORK
Albany
Buffalo
New York City
Rochester
Syracuse

NORTH CAROLINA
Charlotte
Greensboro

OHIO
Akron
Cincinnati
Cleveland
Columbus
Dayton
Delaware
Toledo

OKLAHOMA
Oklahoma City
Tulsa

OREGON
Portland

PENNSYLVANIA
Harrisburg
Philadelphia
Pittsburgh
Pittston

PUERTO RICO
Caparra Heights

RHODE ISLAND
Providence

TENNESSEE
Memphis
Knoxville
Nashville

TEXAS
Dallas
El Paso
Houston
Lubbock
San Antonio

UTAH
Salt Lake City

VIRGINIA
Alexandria
Harrisonburg
Richmond
Virginia Beach

WASHINGTON
Seattle
Spokane

WEST VIRGINIA
Barboursville

WISCONSIN
Milwaukee

DUNHAM-BUSH, INC. • Harrisonburg, Virginia 22801, U.S.A.
6111D-10M-1277C-180D

one of The Signal Companies

Exhibit H-7

FORM NO. 2505B

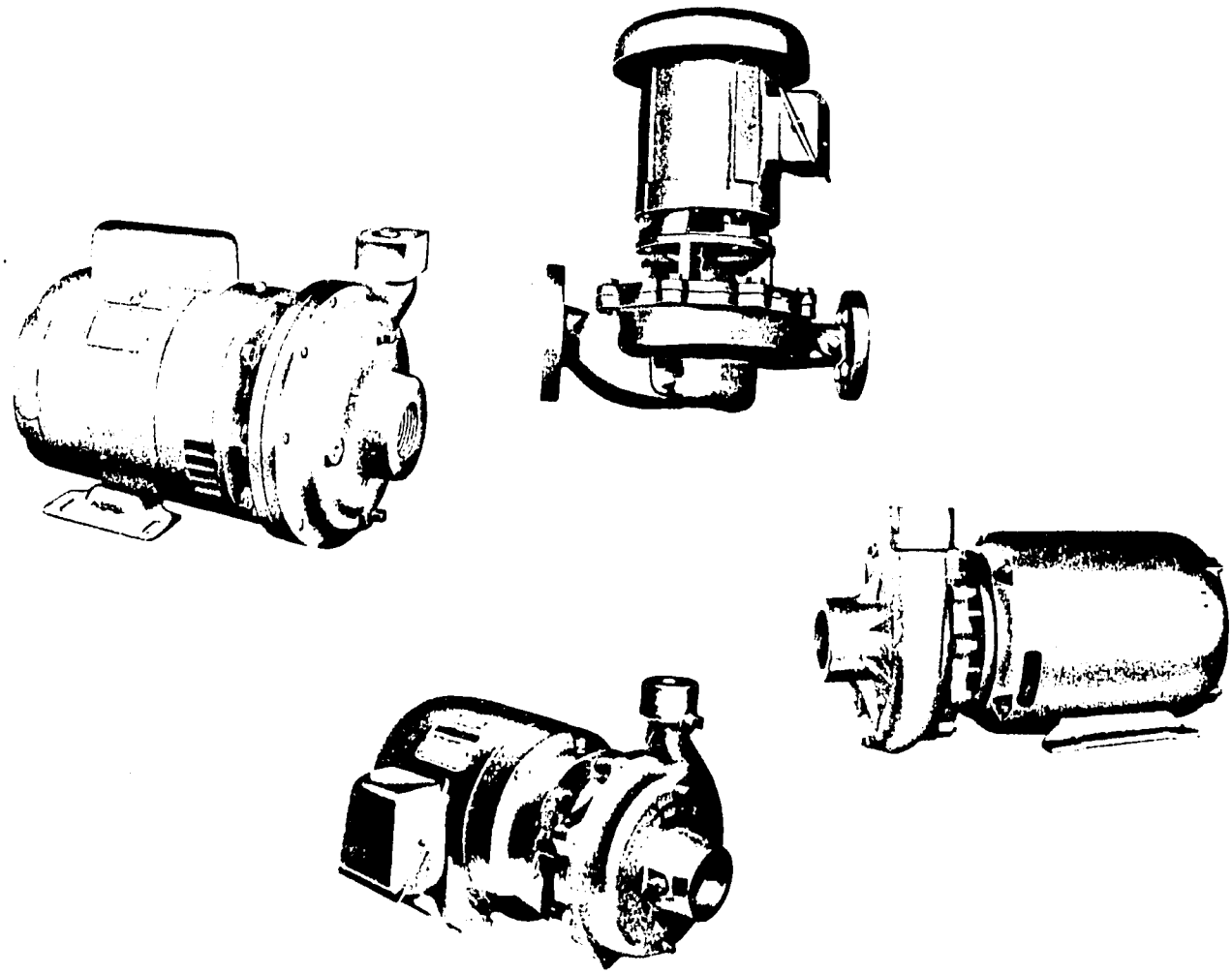

DUNHAM-BUSH

CENTRIFUGAL PUMPS

TYPE A5, A7, A9 AND PM7

PARTS SELECTION LIST

INDEX

	Pg.
NOMENCLATURE	1
ORDERING PROCEDURE	1
A5 PUMPS	
1/3 HP, 1/2 HP AND 3/4 HP	2
1 HP, 1-1/2 HP AND 2 HP	3
A9 PUMPS AND PARTS LIST	
1/2 HP, 3/4 HP AND 1 HP	**4**
1 1/2 HP	**5**
2 HP	**6–7**
3 HP	**8**
5 HP	**9**
7 1/2 HP	**10**
10 HP AND 15 HP	11
SERIES A A9 PUMPS	
1/2 HP, 3/4 HP AND 1 HP	12
1-1/2 HP	13
2 HP	14
3 HP	15
5 HP	16
7-1/2 HP	17
10 AND 15 HP	18
A7 PUMPS	
3/4", 1-1/4" AND 1-1/2" DISCHARGE	19
2" AND 2-1/2" DISCHARGE	20
PM7 PUMPS	
1", 1-1/4" AND 1-1/2" DISCHARGE	21
2" AND 2-1/2" DISCHARGE	22
A7A PUMPS	
3/4", 1-1/4 " AND 1-1/2" DISCHARGE	23
PM7A PUMPS	
1", 1-1/4" AND 1-1/2" DISCHARGE	24

DUNHAM-BUSH RESERVES THE RIGHT TO MAKE CHANGES IN SPECIFICATIONS AND DESIGN WITHOUT NOTICE.

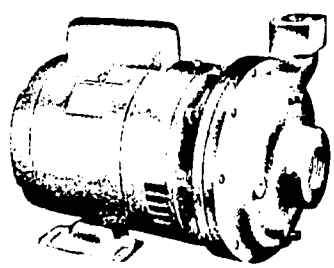

TYPE A5 PUMP

TYPE A7A AND A7 PUMPS

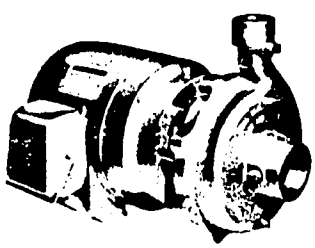

TYPE A9 PUMP

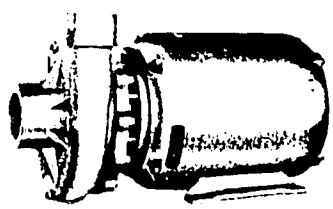

TYPE PM7 AND PM7A PUMPS

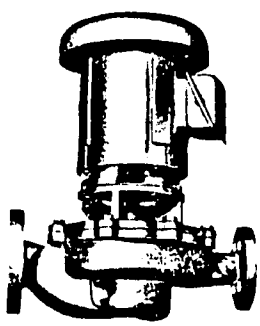

NOMENCLATURE

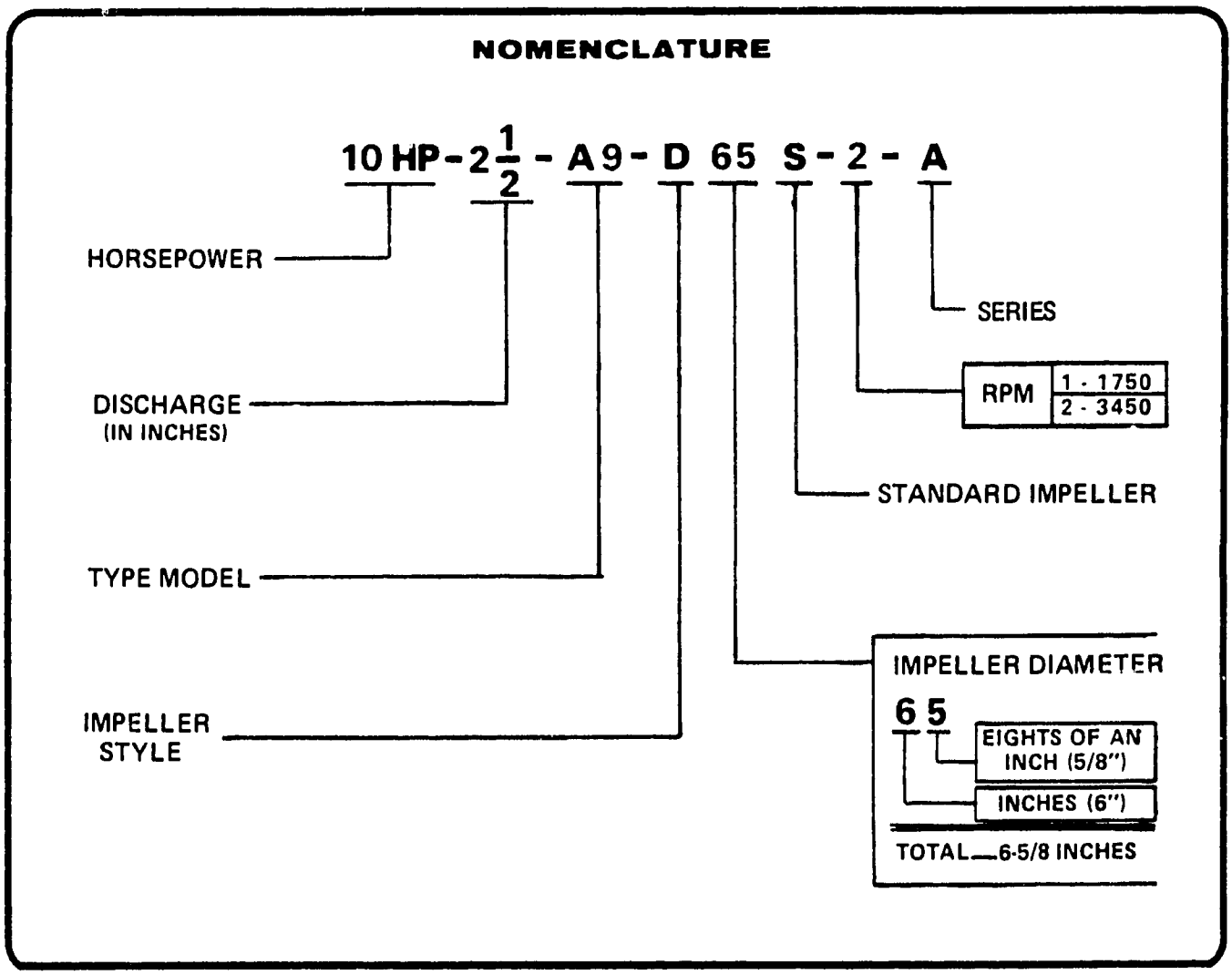

ORDERING PROCEDURE

1. Complete part number and description is required when ordering.
2. When a part number is not known or shown in the parts catalog, the complete model and serial number of the unit on which the part is to be used must be given.
3. Send all orders to:

   DUNHAM-BUSH, INC., PARTS DEPT.
   811 E. MAIN ST.
   MARSHALLTOWN, IOWA, 50158

4. Prices can be found in the latest revision of Form 17448 and are for one item or kit as applicable.
5. Minimum billing is $25.00.
6. All prices are subject to federal, state, local or other taxes which may be applicable.
7. All orders requiring **special handling** will have a surcharge of $25.00 or the actual cost of this requirement whichever is greater.
8. Dunham-Bush reserves the right to substitute parts if they are interchangeable with those ordered. The invoice will reflect the cost of the actual part shipped.

9 Refer to latest revision of Form 17448 for prices.

10 Refer to the latest revision of Form 1278 for terms of sale.

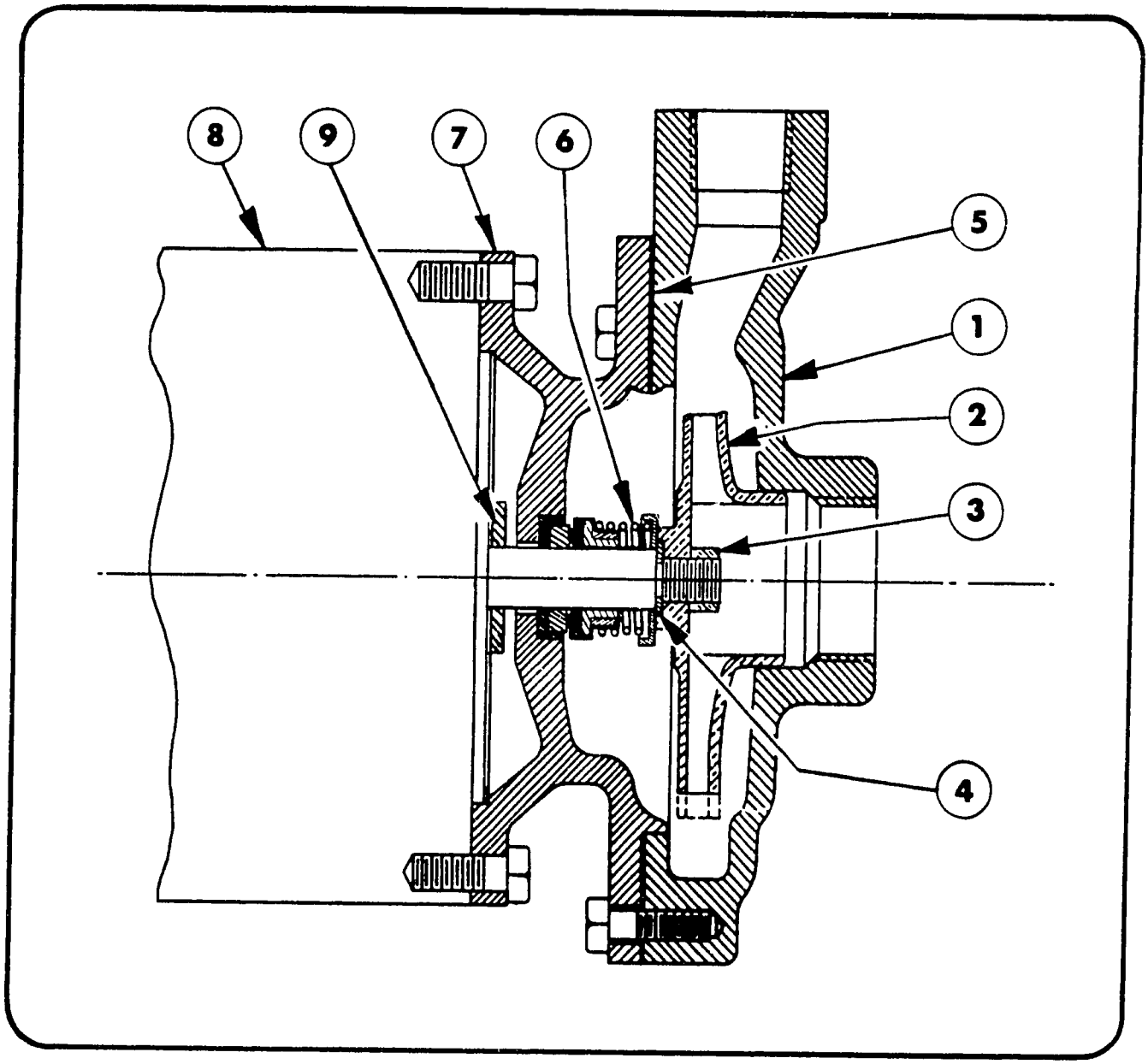

A5 PUMP AND PARTS LIST

1/3 HP, 1/2 HP AND 3/4 HP

PART NUMBER AND DESCRIPTION	1/3 HP 1" 1φ & 3φ A5C2	1/3 HP 1 1/2" 1φ & 3φ A5C2	1/2 HP 1" 1φ & 3φ A5C2	1/2 HP 1 1/2" 1φ & 3φ A5C2	3/4 HP 3/4" 1φ & 3φ A5C2	3/4 HP 1 1/2" 1φ & 3φ A5C2
1 CASE (CAST IRON) CASE (BRONZE)	E6046 E6078	E6048 E6080	E6045 E6078	E6048 E6080	E6041 E6077	E6048 E6080
2 IMPELLER	D5197x 3 15/16"	D5203x 3 1/4"	D5197x 4 5/16"	D5203x 3 5/8"	D5193x 4 5/16"	D5203x 4 3/32"
3 NUT - IMPELLER	P-116	P-116	P-116	P-116	P-116	P-116
4 WASHER	C8709	C8709	C8709	C8709	C8709	C8709
5 GASKET-CASE *	D5352	D5352	D5352	D5352	D5352	D5352
6 SEAL-SHAFT *	472	472	472	472	472	472
7 HEAD (CAST IRON) HEAD (BRONZE)	E6042 E6081	E6042 E6081	E6042 E6081	E6042 E6081	E6042 E6081	E6042 E6081
8 MOTOR	Contact Dunham-Bush, Inc., Marshalltown, Iowa					
9 SLINGER	C8854	C8854	C8854	C8854	C8854	C8854

NOTES: 1. NON-STANDARD pump parts are not shown. When ordering repair parts, refer to page 1 of this catalog.
2. * = These parts are required when replacing shaft seal.

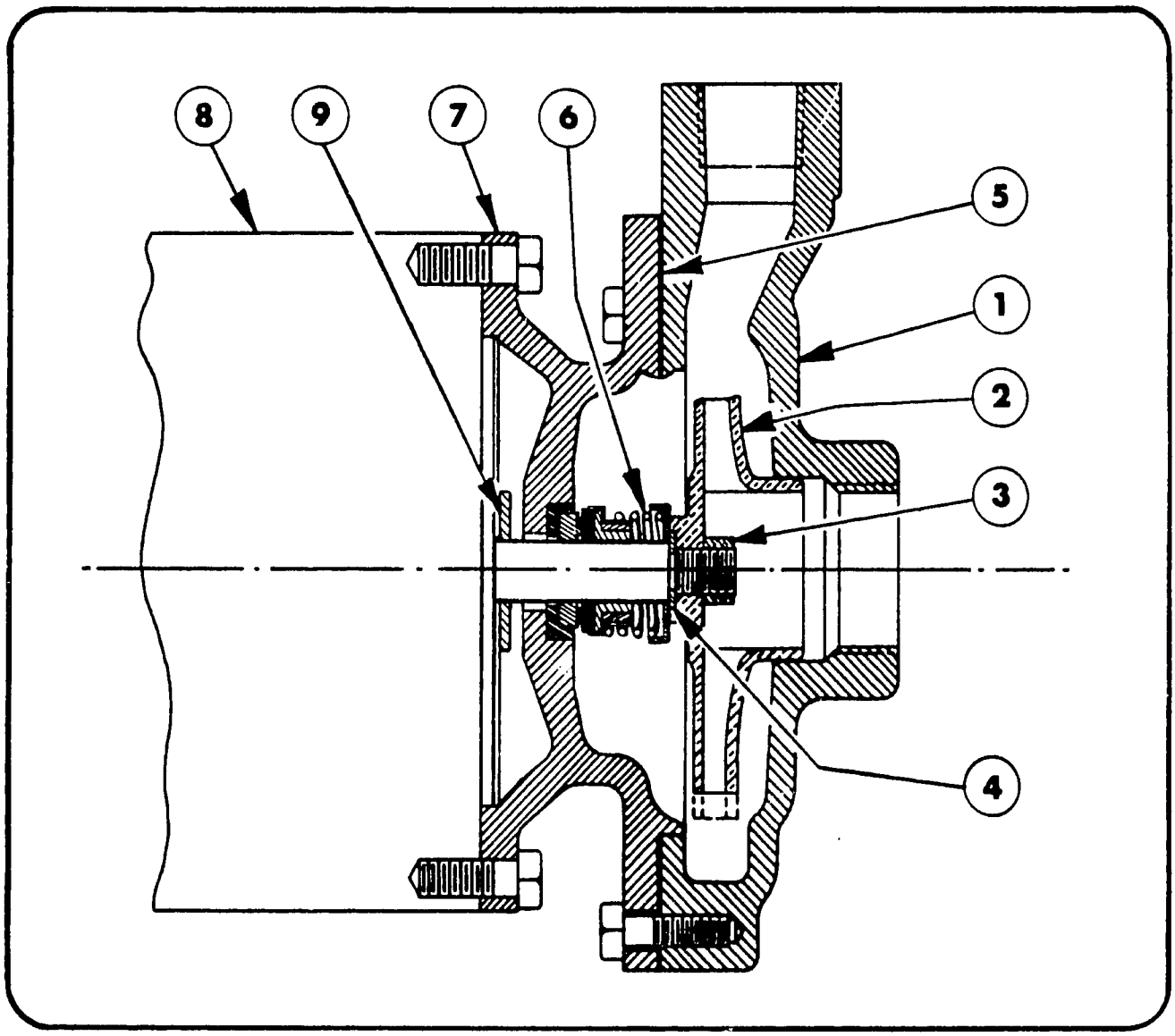

A5 PUMP AND PARTS LIST

1 HP, 1½ HP AND 2 HP

	PART NUMBER AND DESCRIPTION	1 HP ¾" 1φ & 3φ A5A2	1 HP 1½" 1φ & 3φ A5C2	1½ HP ¾" 1φ & 3φ A5A2	1½ HP 1¼" 1φ & 3φ A5B2	2 HP 1" 1φ & 3φ A5A2	2 HP 1¼" 1φ & 3φ A5B2	2 HP 1½" 1φ & 3φ A5B2
1	CASE (CAST IRON) CASE (BRONZE)	E6041 E6077	E6048 E6080	E6041 E6077	E6047 E6079	E6046 E6078	E6047 E6079	E6048 E6080
2	IMPELLER	D5193x 4 9/16"	D5203x 4 5/16"	D5193x 5"	D5199x 4 1/8"	D5195x 4 1/2"	D5199x 4 1/2"	D5202x 4 1/8"
3	NUT–IMPELLER	P-116	P-116	P-116	P-116	P-116	P-116	P-116
4	WASHER	C8709	C8709	C8709	C8709	C8709	C8709	C8709
5	GASKET–CASE *	D5352	D5352	D5352	D5352	D5352	D5352	D5352
6	SEAL–SHAFT *	472	472	472	472	472	472	472
7	HEAD (CAST IRON) HEAD (BRONZE)	E6042 E6081	E6042 E6081	E6042 E6081	E6042 E6081	E6042 E6081	E6042 E6081	E6042 E6081
8	MOTOR	Contact Dunham-Bush, Inc., Marshalltown, Iowa						
9	SLINGER	C8854	C8854	C8854	C8854	C8854	C8854	C8854

NOTES: 1. NON-STANDARD pump parts are not shown. When ordering repair parts, refer to page 1 of this catalog.
2. * = These parts are required when replacing shaft seal.

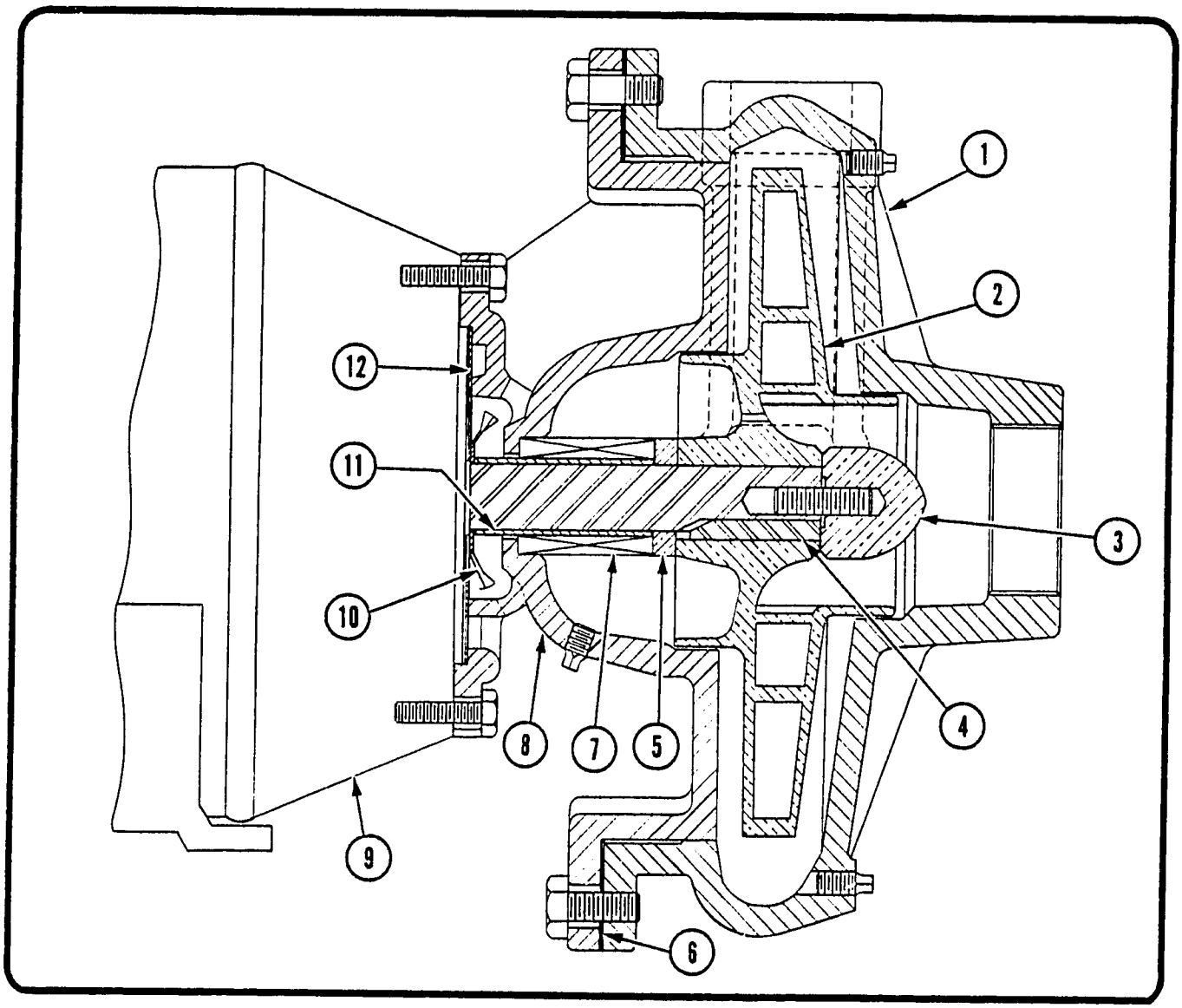

A9 PUMP AND PARTS LIST—½ HP, ¾ HP AND 1 HP

PART	½ HP 1" 1φ & 3φ A9C1	¾ HP 1" 1φ & 3φ A9C1	¾ HP 1¼" 1φ & 3φ A9D1	1 HP 1" 1φ & 3φ A9C1	1 HP 1¼" 1φ & 3φ A9D1	1 HP 2" 1φ & 3φ A9D1
1 *CASE (CAST IRON) *CASE (BRONZE)	F541 D2-76	F541 D2-76	F540 D2-74	F541 D2-76	F540 D2-74	F544 D2-80
2 IMPELLER	C2-73x 6¼"	C2-73x 6¾"	E6181x 4 13/16"	C2-73x 7 5/16"	E6181x 5 13/32"	E6188x 5⅜"
3 STUD & NUT ASSEMBLY	C10035 C8938	C10035 C8938	C10035 C8938	C10035 C8938	C10035 C8938	C10035 C8938
4 KEY	C10025	C10025	C10025	C10025	C10025	C10025
5 SEAL SPACER	C10060	C10060	C10060	C10060	C10060	C10060
6 GASKET	D5450	D5450	D5450	D5450	D5450	D5450
7 SHAFT SEAL	860	860	860	860	860	860
8 *HEAD (CAST IRON) *HEAD (BRONZE)	F539 D2-77	F539 D2-77	F539 D2-77	F539 D2-77	F539 D2-77	F539 D2-77
9 MOTOR	Contact Dunham-Bush, Inc., Marshalltown, Iowa					
10 SLINGER	C10037	C10037	C10037	C10037	C10037	C10037
11 SLEEVE	C10062	C10062	C10062	C10062	C10062	C10062
12 SHIELD	C8958	C8958	C8958	C8958	C8958	C8958

NOTE NON-STANDARD repair parts are not shown, when ordering furnish serial number. Complete ordering instructions are found on Page 1.

* When replacing item No. 8, head, before serial number 6605, item No. 1, case, must also be replaced.

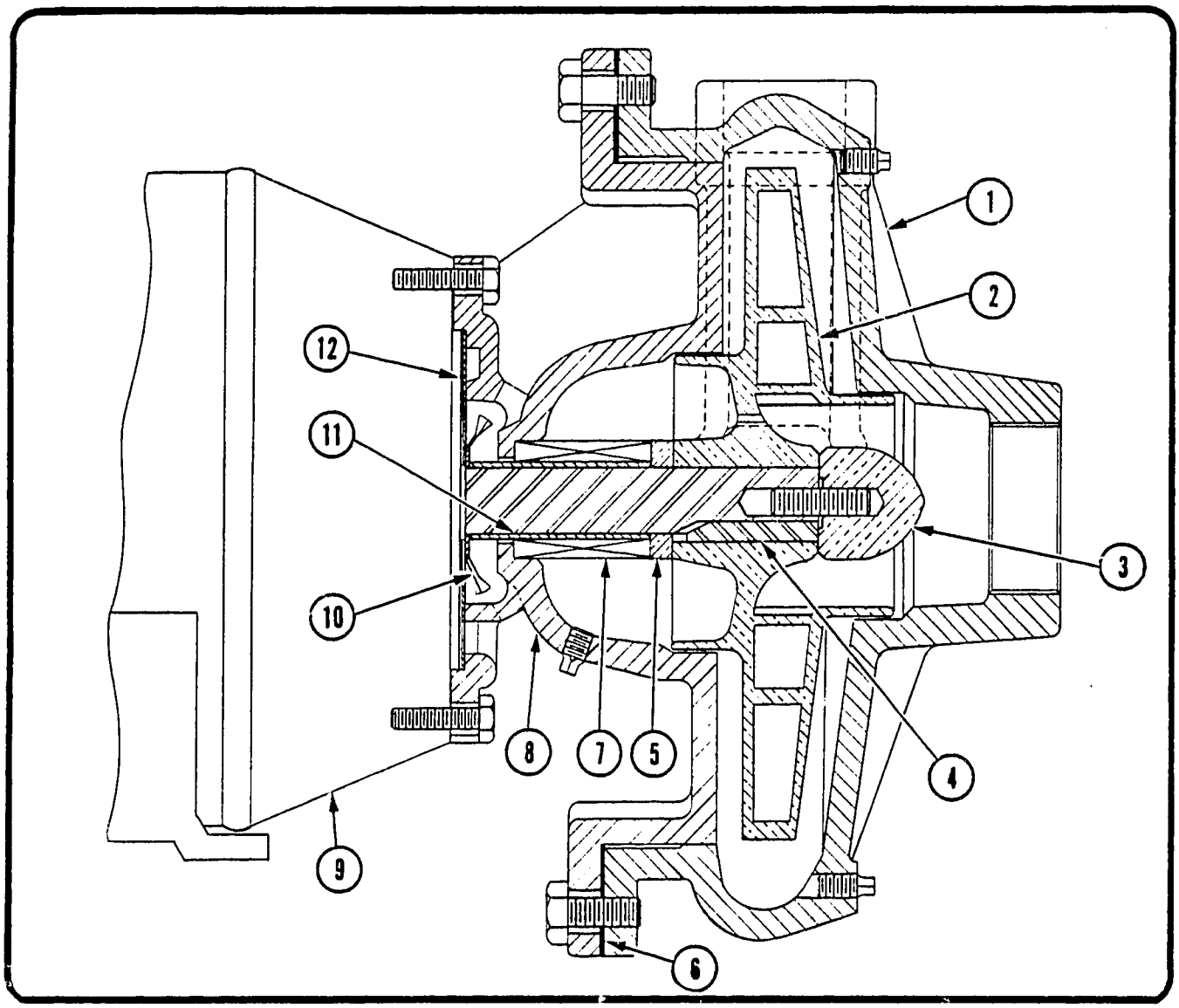

A9 PUMP AND PARTS LIST-1½ HP

	PART	1½ HP 1" 1ϕ & 3ϕ A9C1	1½ HP 1¼" 1ϕ & 3ϕ A9D1	1½ HP 2" 1ϕ & 3ϕ A9D1	1½ HP 2½" 1ϕ & 3ϕ A9E2	1½ HP 2½" 1ϕ & 3ϕ A9D1
1	*CASE (CAST IRON) *CASE (BRONZE)	F541 D2-76	F540 D2-74	F544 D2-80	F545 D2-79	F545 D2-79
2	IMPELLER	C2-73x 5 5/16"	E6181x 6 3/8"	E6188x 5 29/32"	E6184x 3 15/16"	E6204x 5 21/32"
3	STUD & NUT ASSEMBLY	C10035 C8938	C10035 C8938	C10035 C8938	C10035 C8938	C10035 C8938
4	KEY	C10025	C10025	C10025	C10025	C10025
5	SEAL SPACER	C10060	C10060	C10060	C10060	C10060
6	GASKET	D5450	D5450	D5450	D5450	D5450
7	SHAFT SEAL	860	860	860	860	860
8	*HEAD (CAST IRON) *HEAD (BRONZE)	F539 D2-77	F539 D2-77	F539 D2-77	F539 D2-77	F539 D2-77
9	MOTOR	Contact Dunham-Bush, Inc., Marshalltown, Iowa				
10	SLINGER	C10037	C10037	C10037	C10037	C10037
11	SLEEVE	C10062	C10062	C10062	C10062	C10062
12	SHIELD	C8958	C8958	C8958	C8958	C8958

NOTE: NON-STANDARD repair parts are not shown, when ordering furnish serial number. Complete ordering instructions are found on Page 1.

*When ordering case for 2½" A9E, also show A2-51 Adapter, which must be pressed in the case.

* When replacing item No. 8, head, before serial number 6605, item No. 1, case, must also be replaced.

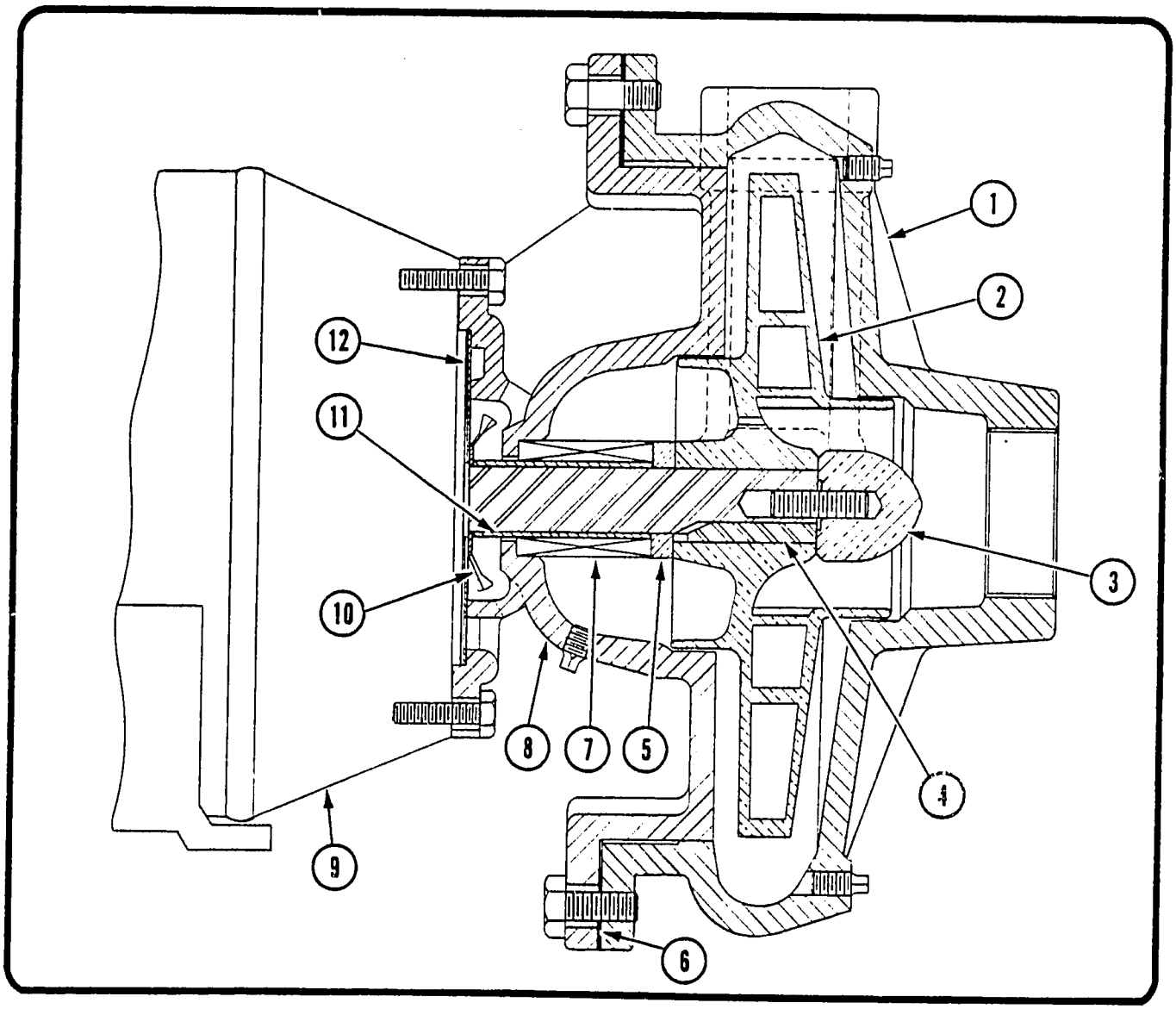

A9 PUMP AND PARTS LIST – 2 HP

PART	2 HP 1" 1ϕ A9C1	2 HP 1" 3ϕ A9C1	2 HP 1¼" 1ϕ A9D1	2 HP 1¼" 3ϕ A9D1
1 *CASE (CAST IRON) *CASE (BRONZE)	F541 D2-76	F541 D2-76	F540 D2-74	F540 D2-74
2 IMPELLER	C2-73x 9"	C2x73x 9"	E6181x 7 3/16"	E6181x 7 3/16"
3 STUD & NUT ASSEMBLY	C10035 C8938	C10035 C8938	C10035 C8938	C10035 C8938
4 KEY	C10025	C10025	C10025	C10025
5 SEAL SPACER	C10061	C10060	C10061	C10060
6 GASKET	D5450	D5450	D5450	D5450
7 SHAFT SEAL	861	860	861	860
8 *HEAD (CAST IRON) *HEAD (BRONZE)	F546 D2-77	F539 D2-77	F546 D2-78	F539 D2-77
9 MOTOR	Contact Dunham-Bush, Inc., Marshalltown, Iowa			
10 SLINGER	C10038	C10037	C10038	C10037
11 SLEEVE	C10063	C10062	C10063	C10062
12 SHIELD	D5478	C8958	D5478	C8958

NOTE: NON-STANDARD repair parts are not shown, when ordering furnish serial number. Complete ordering instructions are found on Page 1.

*When replacing item No. 8, head, before serial number 6605, item No. 1, case, must also be replaced.

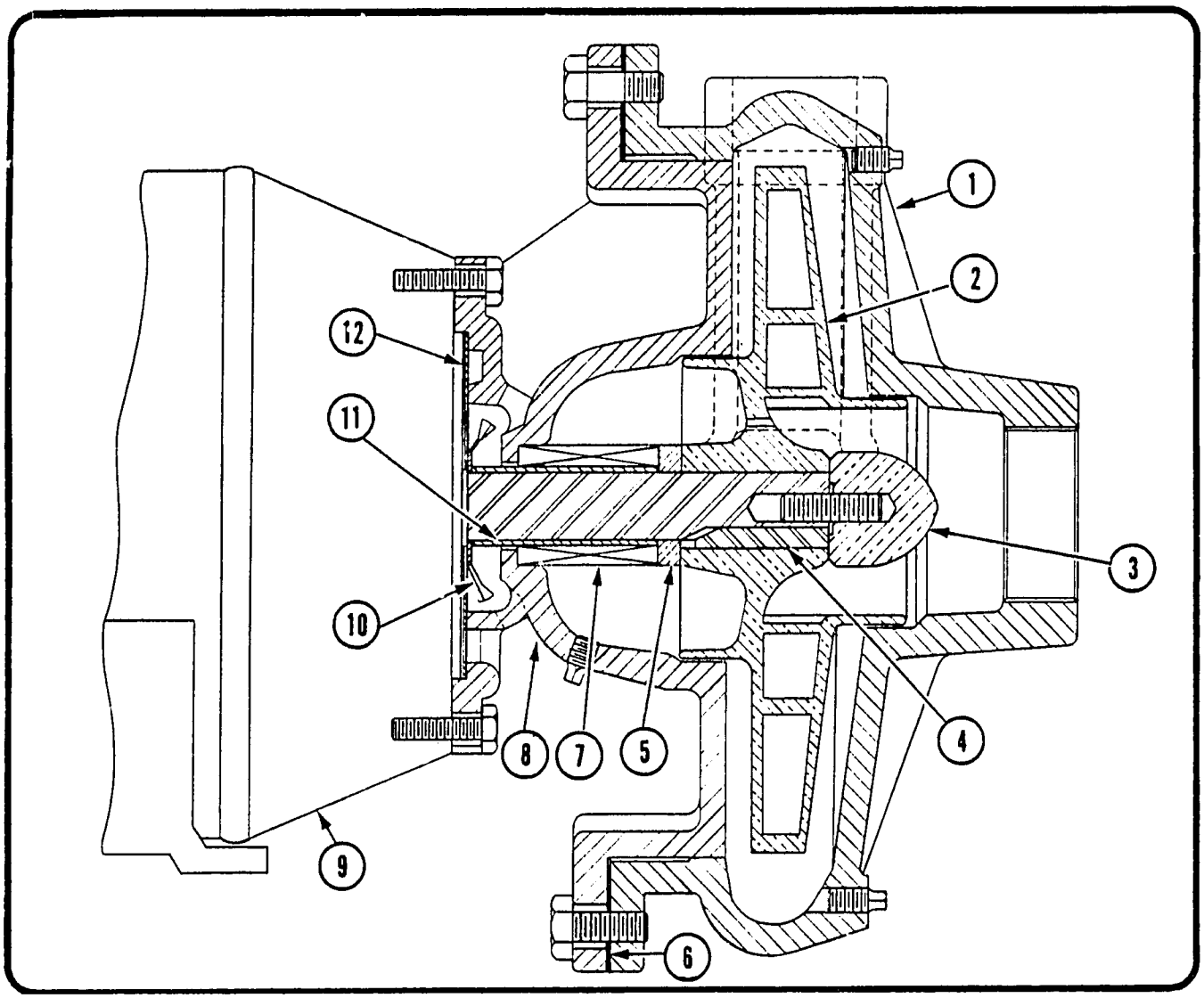

A9 PUMP AND PARTS LIST — 2 HP

	PART	2 HP 2" 1ϕ A9D1	2 HP 2" 3ϕ A9D1	2 HP 2½" 1ϕ A9D1	2 HP 2½" 3ϕ A9D1	2 HP 2½" 1ϕ & 3ϕ A9E2
1	*CASE (CAST IRON) *CASE (BRONZE)	F544 D2-80	F544 D2-80	F545 D2-79	F545 D2-79	F545 D2-79
2	IMPELLER	E6188x 6½"	E6188x 6½"	E6204x 6⅛"	E6204x 6⅛"	E6184x 3 15/16"
3	STUD & NUT ASSEMBLY	C10035 C8938	C10035 C8938	C10035 C8938	C10035 C8938	C10035 C8938
4	KEY	C10025	C10025	C10025	C10025	C10025
5	SEAL SPACER	C10061	C10060	C10061	C10060	C10060
6	GASKET	D5450	D5450	D5450	D5450	D5450
7	SHAFT SEAL	861	860	861	860	860
8	*HEAD (CAST IRON) *HEAD (BRONZE)	F546 D2-78	F539 D2-77	F546 D2-79	F539 D2-79	F539 D2-77
9	MOTOR	Contact Dunham-Bush, Inc., Marshalltown, Iowa				
10	SLINGER	C10038	C10037	C10038	C10037	C10037
11	SLEEVE	C10063	C10062	C10063	C10062	C10062
12	SHIELD	D5478	C8958	D5478	C8958	C8958

NOTE: NON-STANDARD repair parts are not shown, when ordering furnish serial number. Complete ordering instructions are found on Page 1.
*When ordering case for 2½" A9E, also show A2-51 Adapter, which must be pressed in the case.
When replacing item No. 8, head, before serial number 6605, item No. 1, case, must also be replaced.

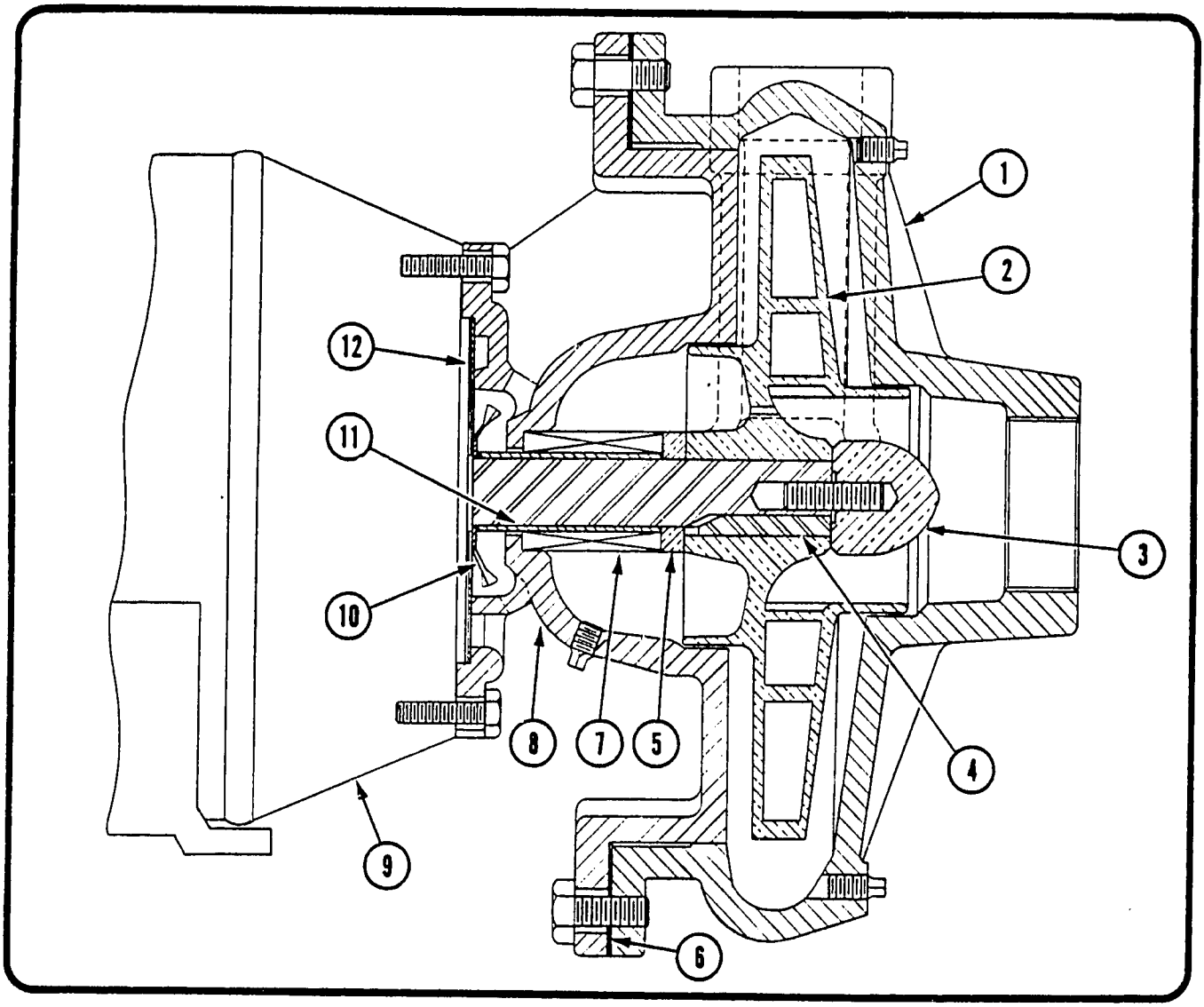

A9 PUMP AND PARTS LIST – 3 HP

	PART	3 HP 1" 3ϕ A9D2	3 HP 1" 3ϕ A9C2	3 HP 1¼" 3ϕ A9D1	3 HP 1¼" 3ϕ A9D2	3 HP 2" 3ϕ A9D1	3 HP 2½" 3ϕ A9D1	3 HP 2½" 3ϕ A9E2
1	*CASE (CAST IRON) *CASE (BRONZE)	F541 D2-76	F541 D2-76	F540 D2-74	F540 D2-74	F544 D2-80	F545 D2-79	F545 D2-79
2	IMPELLER	E6141x 5¼"	C2-73x 6 1/16"	E6181x 8¼"	E6181x 4 7/16"	E6188x 7 1/16"	E6204x 6¾"	E6184x 4¼"
3	STUD & NUT ASSEMBLY	C10035 C8938	C10035 C8938	C10035 C8938	C10035 C8938	C10035 C8938	C10035 C8938	C10035 C8938
4	KEY	C10025	C10025	C10025	C10025	C10025	C10025	C10025
5	SEAL SPACER	C10060	C10060	C10061	C10060	C10061	C10061	C10060
6	GASKET	D5450	D5450	D5450	D5450	D5450	D5450	D5450
7	SHAFT SEAL	860	860	861	860	861	861	860
8	*HEAD (CAST IRON) *HEAD (BRONZE)	F539 D2-77	F539 D2-77	F546 D2-78	F539 D2-77	F546 D2-78	F546 D2-78	F539 D2-77
9	MOYOR	Contact Dunham-Bush, Inc., Marshalltown, Iowa						
10	SLINGER	C10037	C10037	C10038	C10037	C10038	C10038	C10037
11	SLEEVE	C10062	C10062	C10063	C10062	C10063	C10063	C10062
12	SHIELD	C8958	C8958	D5478	C8958	D5478	D5478	C8958

NOTE: NON-STANDARD repair parts are not shown, when ordering furnish serial number. Complete ordering instructions are found on Page 1.
*When replacing item No. 8, head, before serial number 6605, item No. 1, case, must also be replaced.

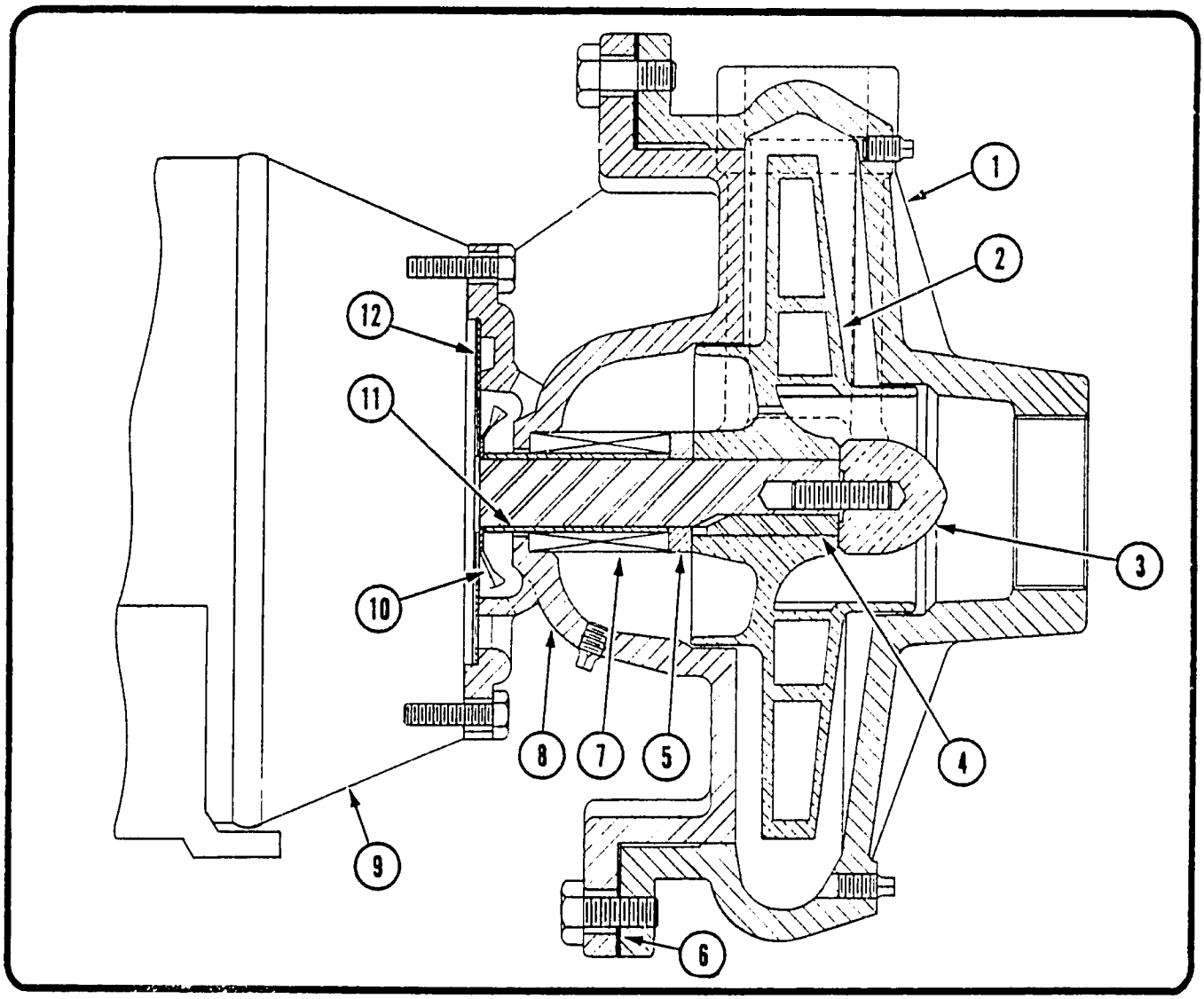

A9 PUMP AND PARTS LIST — 5 HP

	PART	5 HP 1" 3ϕ A9C2	5 HP 1" 3ϕ A9D2	5 HP 1¼" 3ϕ A9D2	5 HP 2" 3ϕ A9D1	5 HP 2" 3ϕ A9D2	5 HP 2½" 3ϕ A9D1	5 HP 2½" 3ϕ A9D2
1	*CASE (CAST IRON) *CASE (BRONZE)	F541 D2-76	F541 D2-76	F540 D2-74	F544 D2-80	F544 D2-80	F545 D2-79	F545 D2-79
2	IMPELLER	C2-73x 6 9/16"	E6141x 5 7/8"	E6181x 5 15/32"	E6188x 8 7/16"	E6188x 4 13/16"	E6204x 7 13/16"	E6204x 4 3/4"
3	STUD & NUT ASSEMBLY	C10035 C8938	C10035 C8938	C10035 C8938	C10035 C8938	C10035 C8938	C10035 C8938	C10035 A2-672
4	KEY	C10025	C10025	C10025	C10025	C10025	C10025	C10025
5	SEAL SPACER	C10061	C10061	C10061	C10061	C10061	C10061	C10061
6	GASKET	D5450	D5450	D5450	D5450	D5450	D5450	D5450
7	SHAFT SEAL	861	861	861	861	861	861	861
8	*HEAD (CAST IRON) *HEAD (BRONZE)	F546 D2-78	F546 D2-78	F546 D2-78	F546 D2-78	F546 D2-78	F546 D2-78	F546 D2-78
9	MOTOR	Contact Dunham-Bush, Inc., Marshalltown, Iowa						
10	SLINGER	C10038	C10038	C10038	C10038	C10038	C10038	C10038
11	SLEEVE	C10063	C10063	C10063	C10063	C10063	C10063	C10063
12	SHIELD	D5478	D5478	D5478	D5478	D5478	D5478	D5478

NOTE: NON-STANDARD repair parts are not shown, when ordering furnish serial number. Complete ordering instructions are found on Page 1.

When replacing item No. 8, head, before serial number 6605, item No. 1, case, must also be replaced.

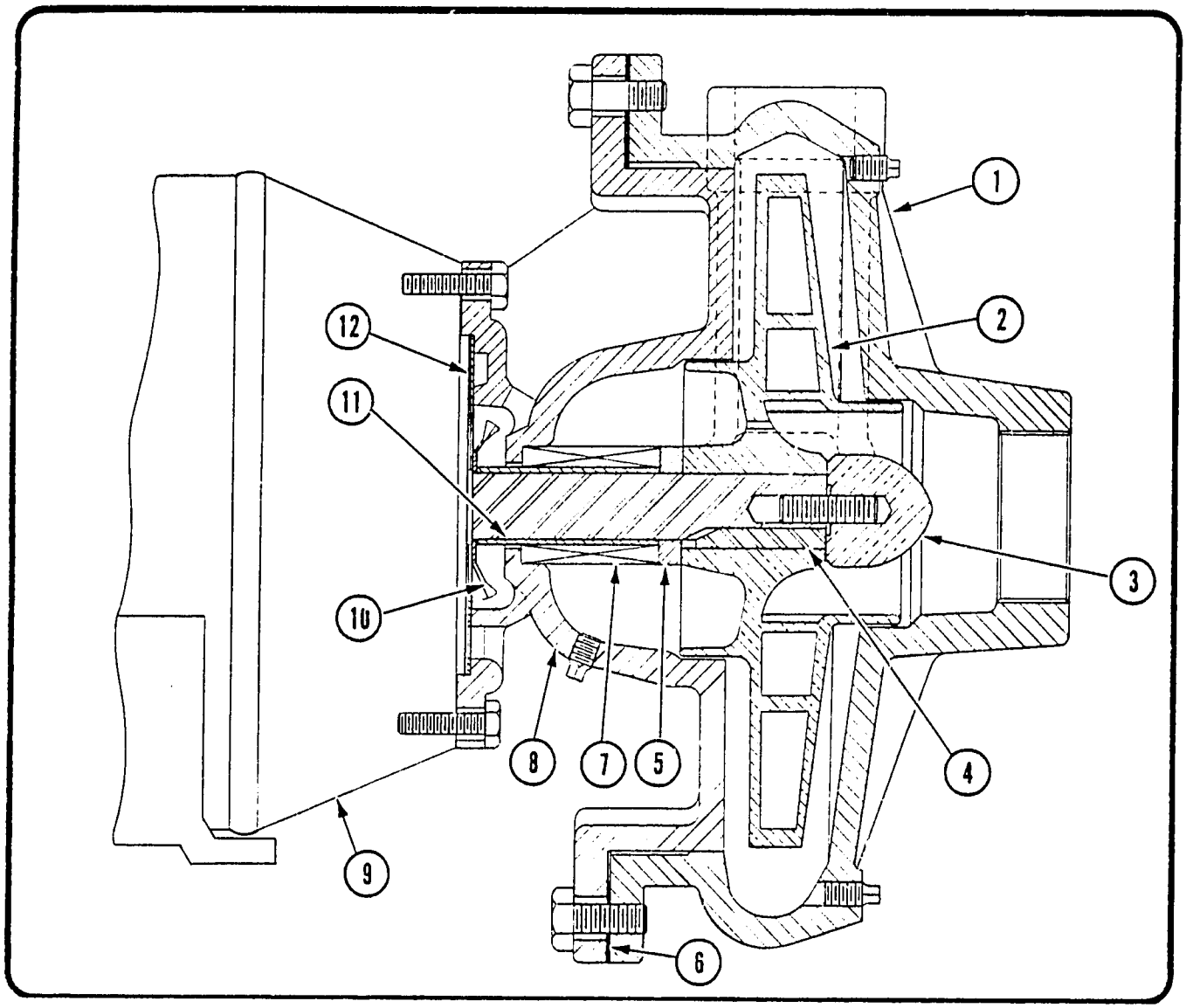

A9 PUMP AND PARTS LIST - 7½ HP

	PART	7½ HP 1¼" 3ϕ A9D2	7½ HP 2" 3ϕ A9D2	7½ HP 2½" 3ϕ A9D1	7½ HP 2½" 3ϕ A9D2
1	*CASE (CAST IRON) *CASE (BRONZE)	F540 D2-74	F544 D2-80	F545 D2-79	F545 D2-79
2	IMPELLER	E6181x 5 13/16"	E6188x 5 9/16"	E6204x 9"	E6204x 5 9/16"
3	STUD & NUT ASSEMBLY	C10035 C8938	C10035 A2-672	C10035 C8938	C10035 A2-672
4	KEY	C10025	C10025	C10025	C10025
5	SEAL SPACER	C10061	C10061	C10061	C10061
6	GASKET	D5450	D5450	D5450	D5450
7	SHAFT SEAL	861	861	861	861
8	*HEAD (CAST IRON) *HEAD (BRONZE)	F546 D2-78	F546 D2-78	F546 D2-78	F546 D2-78
9	MOTOR	Contact Dunham-Bush, Inc., Marshalltown, Iowa			
10	SLINGER	C10038	C10038	C10038	C10038
11	SLEEVE	C10063	C10063	C10063	C10063
12	SHIELD	D5478	D5478	D5478	D5478

NOTE: NON-STANDARD repair parts are not shown, when ordering furnish serial number. Complete ordering instructions are found on Page 1.

*When replacing item No. 8, head, before serial number 6605, item No. 1, case, must also be replaced.

1162

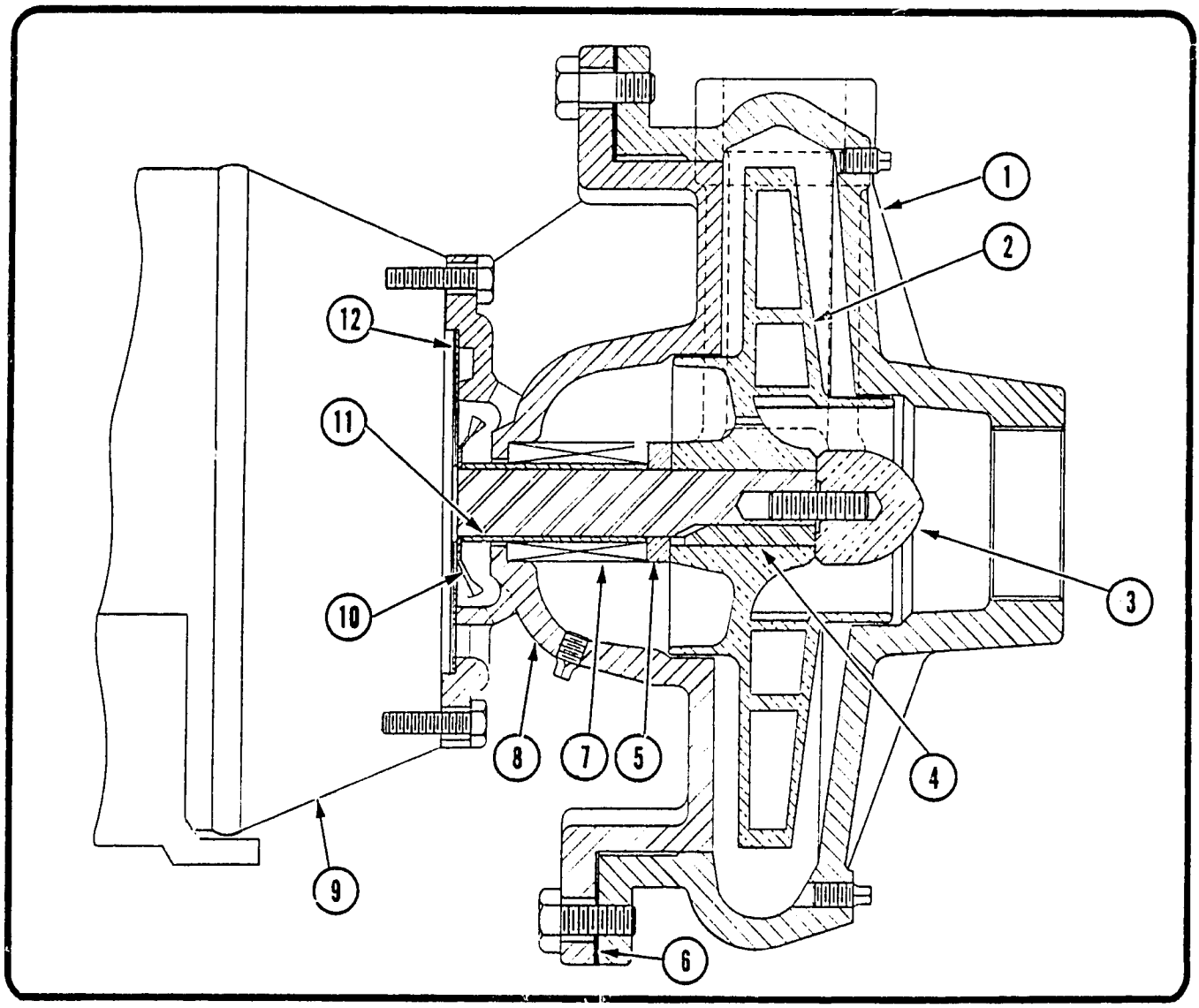

A9 PUMP AND PARTS LIST – 10 HP AND 15 HP

	PART	10 HP 1¼" 3ϕ A9D2	10 HP 2" 3ϕ A9D2	10 HP 2½" 3ϕ A9D2	15 HP 2" 3ϕ A9D2
1	*CASE (CAST IRON) *CASE (BRONZE)	F540 D2-74	F544 D2-80	F545 D2-79	F544 D2-80
2	IMPELLER	E6181x 6⅜"	E6188x 5²⁹⁄₃₂"	E6204x 5²¹⁄₃₂"	E6188x 6⁵⁄₁₆"
3	STUD & NUT ASSEMBLY	C10035 C8938	C10035 A2-672	C10035 A2-672	C10035 A2-672
4	KEY	C10025	C10025	C10025	C10025
5	SEAL SPACER	C10061	C10061	C10061	C10061
6	GASKET	D5450	D5450	D5450	D5450
7	SHAFT SEAL	861	861	861	861
8	*HEAD (CAST IRON) *HEAD (BRONZE)	F546 D2-78	F546 D2-78	F546 D2-78	F546 D2-78
9	MOTOR	Contact Dunham-Bush, Inc., Marshalltown, Iowa.			
10	SLINGER	C10038	C10038	C10038	C10038
11	SLEEVE	C10063	C10063	C10063	C10063
12	SHIELD	D5478	D5478	D5478	D5478

NOTE: NON-STANDARD repair parts are not shown, when ordering furnish serial number. Complete ordering instructions are found on Page 1.
*When replacing item No. 8, head, before serial number 6605, item No. 1, case, must also be replaced.

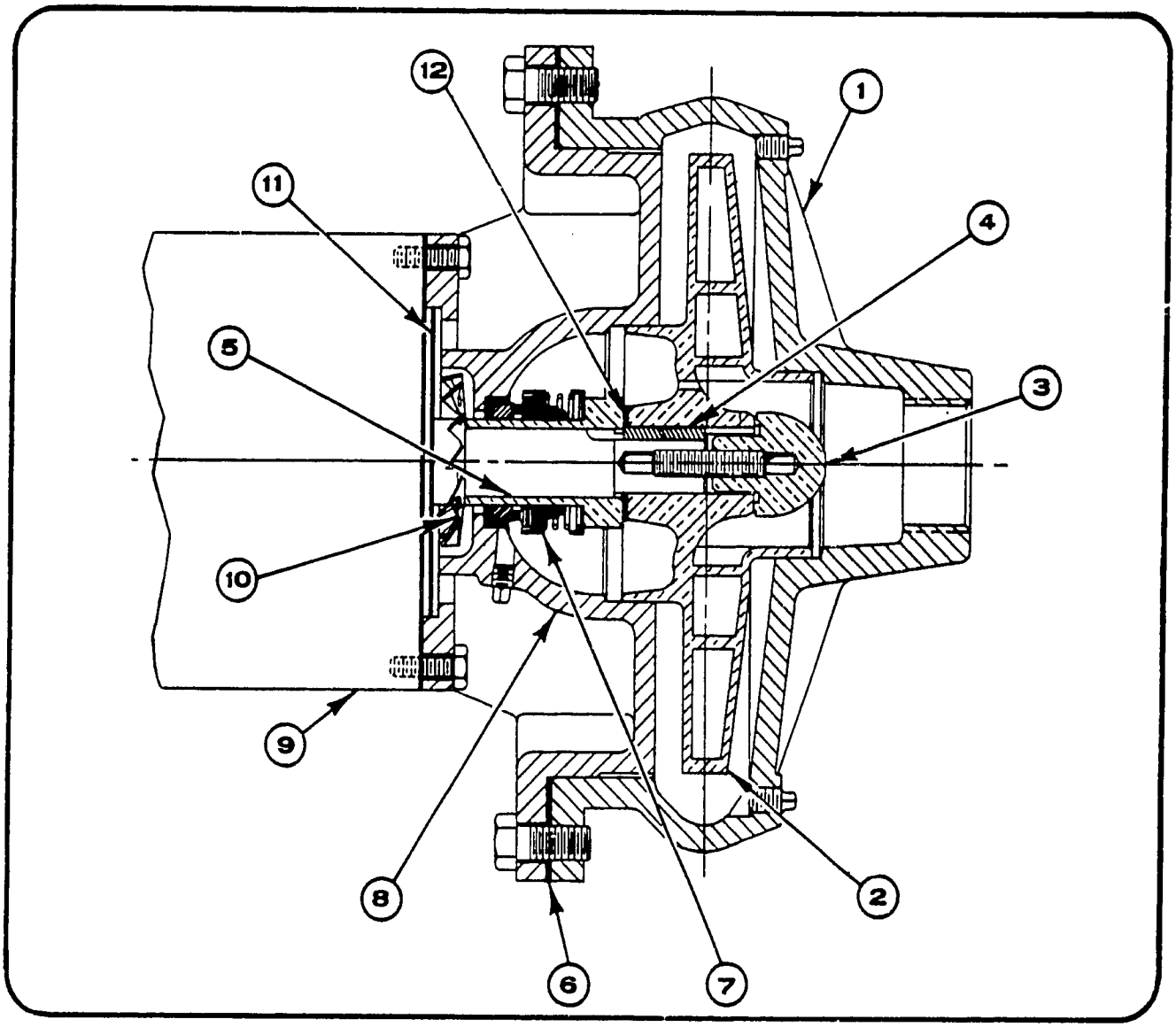

A9 PUMP AND PARTS LIST
SERIES A - ½ HP, ¾ HP AND 1 HP

PART NUMBER AND DESCRIPTION		½ HP 1" 1φ & 3φ A9C1A	¾ HP 1" 1φ & 3φ A9C1A	¾ HP 1¼" 1φ & 3φ A9D1A	1 HP 1" 1φ & 3φ A9C1A	1 HP 1¼" 1φ & 3φ A9D1A	1 HP 2" 1φ & 3φ A9D1A
1	CASE (CAST IRON) CASE (BRONZE)	F541 D2-76	F541 D2-76	F540 D2-74	F541 D2-76	F540 D2-74	F544 D2-80
2	IMPELLER (BRONZE)	C2-3211X 6 1/16"	C2-3211X 6 3/4"	C2-3213X 4 15/16"	C2-3211X 7 5/16"	C2-3213X 5 15/16"	C2-3214X 5 3/8
3	STUD & NUT ASSEMBLY	C10035 A2-3898	C10035 A2-3898	C10035 A2-3898	C10035 A2-3898	C10035 A2-3898	C10035 A2-3898
4	KEY	C7763	C7763	C7763	C7763	C7763	C7763
5	SLEEVE *	A2-3905	A2-3905	A2-3905	A2-3905	A2-3905	A2-3905
6	GASKET *	D5450	D5450	D5450	D5450	D5450	D5450
7	SHAFT SEAL *	3179	3179	3179	3179	3179	3179
8	HEAD (CAST IRON) HEAD (BRONZE)	D2-1478 D2-1480	D2-1478 D2-1480	D2-1478 D2-1480	D2-1478 D2-1480	D2-1478 D2-1480	D2-1478 D2-1480
9	MOTOR	Contact Dunham-Bush, Inc., Marshalltown, Iowa					
10	SLINGER	C10038	C10038	C10038	C10038	C10038	C10038
11	SHIELD	C8958	C8958	C8958	C8958	C8958	C8958
12	GASKET *	A2-3020	A2-3020	A2-3020	A2-3020	A2-3020	A2-3020

NOTES: 1. NON-STANDARD pump parts are not shown. When ordering repair parts, refer to page 1 of this catalog.
2. * = These parts are required when replacing shaft seal.

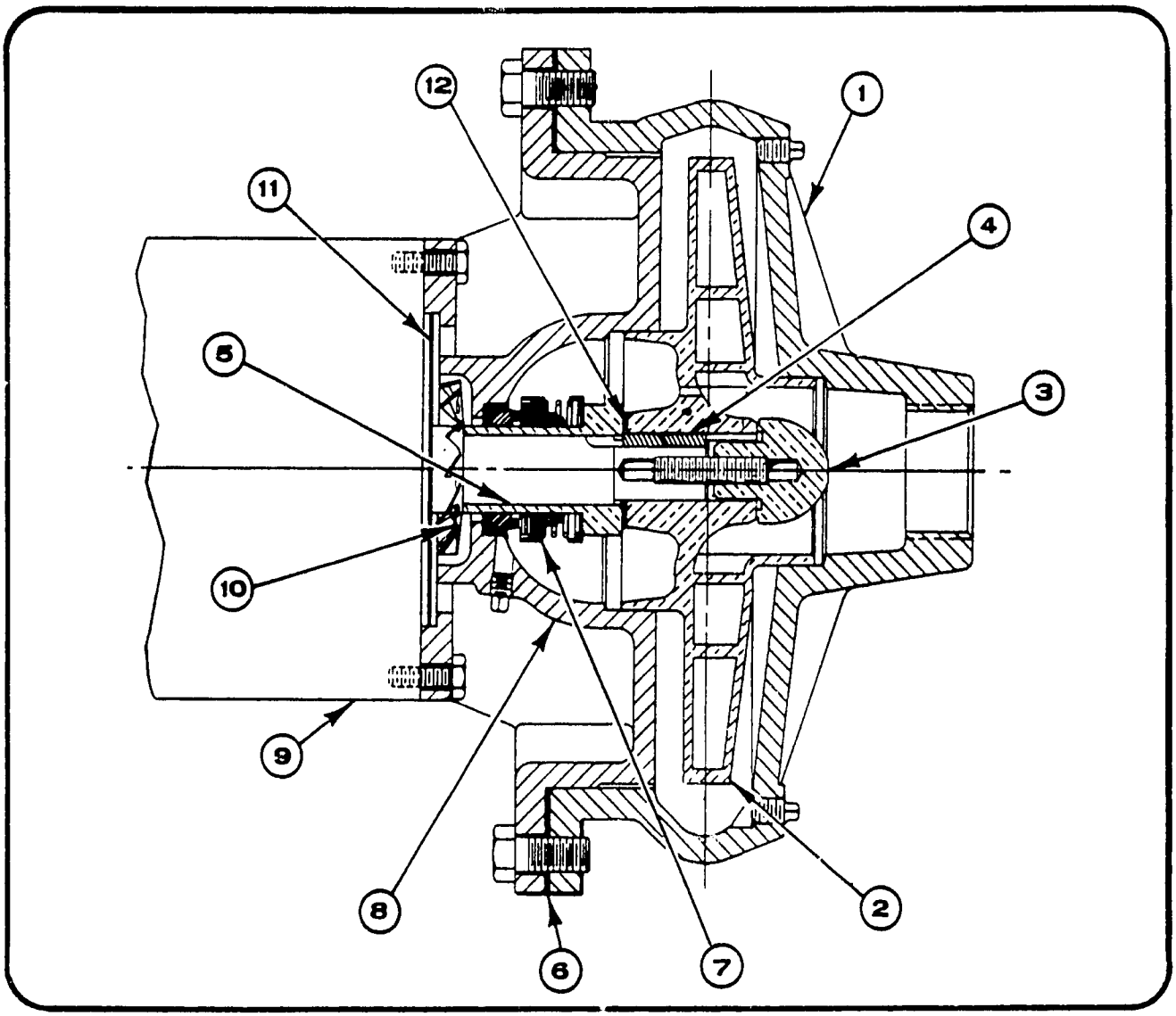

A9 PUMP AND PARTS LIST
SERIES A – 1½ HP

PART NUMBER AND DESCRIPTION	1½ HP 1" 1ϕ & 3ϕ A9C1A	1½ HP 1¼" 1ϕ & 3ϕ A9D1A	1½ HP 2" 1ϕ & 3ϕ A9D1A	1½ HP 2½" 1ϕ & 3ϕ A9D1A
1 CASE (CAST IRON) CASE (BRONZE)	D541 D2-76	F540 D2-74	F544 D2-80	F545 D2-79
2 IMPELLER (BRONZE)	C2-3211X $8^{7}/_{16}$"	C2-3213X $6^{3}/_{8}$"	C2-3214X $5^{29}/_{32}$"	C2-3215X $5^{21}/_{33}$"
3 STUD & NUT ASSEMBLY	C10035 A2-3898	C10035 A2-3898	C10035 A2-3898	C10035 A2-3898
4 KEY	C7763	C7763	C7763	C7763
5 SLEEVE *	A2-3905	A2-3905	A2-3905	A2-3905
6 GASKET *	D5450	D5450	D5450	D5450
7 SHAFT SEAL *	3179	3179	3179	3179
8 HEAD (CAST IRON) HEAD (BRONZE)	D2-1478 D2-1480	D2-1478 D2-1480	D2-1478 D2-1479	D2-1478 D2-1480
9 MOTOR	Contact Dunham-Bush, Inc., Marshalltown, Iowa			
10 SLINGER	C10038	C10038	C10038	C10038
11 SHIELD	C8958	C8958	C8958	C8958
12 GASKET *	A2-3020	A2-3020	A2-3020	A2-3020

NOTES:
1. NON-STANDARD pump parts are not shown. When ordering repair parts, refer to page 1 of this catalog.
2. * = These parts are required when replacing shaft seal.

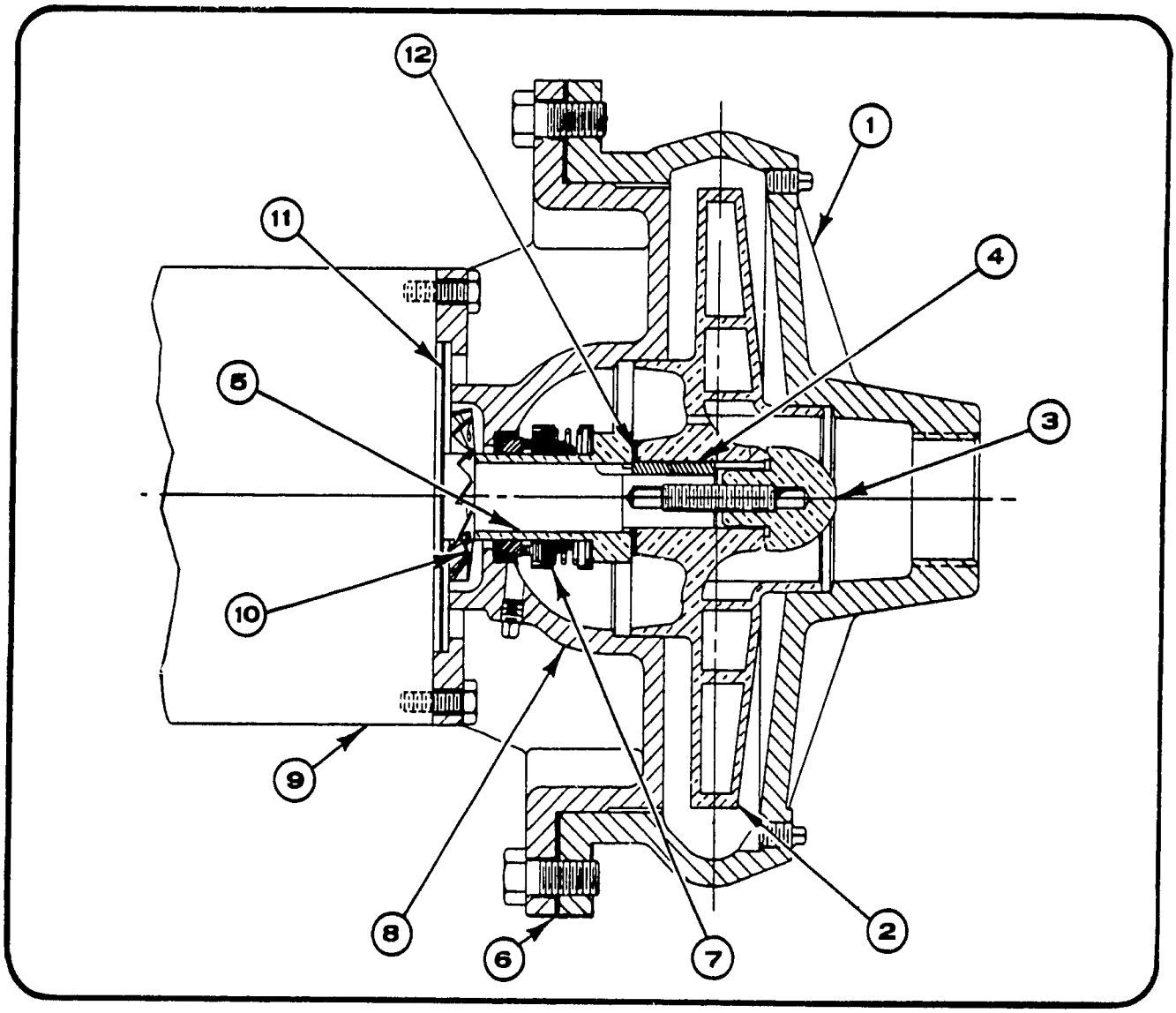

A9 PUMP AND PARTS LIST
SERIES A - 2 HP

PART NUMBER AND DESCRIPTION	2 HP 1" 1ϕ A9C1A	2 HP 1" 3ϕ A9C1A	2 HP 1¼" 1ϕ A9D1A	2 HP 1¼" 3ϕ A9D1A	2 HP 2" 1ϕ D9D1A	2 HP 2" 3ϕ A9D1A	2 HP 2½" 1ϕ A9D1A	2 HP 2½" 3ϕ A9D1A
1 CASE (CAST IRON) CASE (BRONZE)	F541 D2-76	F541 D2-76	F540 D2-74	F540 D2-74	F544 D2-80	F544 D2-80	F545 D2-79	F545 D2-79
2 IMPELLER (BRONZE)	C2-3211X 9"	C2-3211X 9"	C2-3213X 7 3/16"	C2-3213X 7 3/16"	C2-3214X 6 1/2"	C2-3214X 6 1/2"	C2-3215X 6 1/8"	C2-3215X 6 1/8"
3 STUD & NUT ASSEMBLY	C10035 A2-3898	C10035 A2-3898	C10035 A2-3898	C10035 A2-3898	C10035 A2-3898	C10035 A2-3898	C10035 A2-3898	C10035 A2-3898
4 KEY	C7763	C7763	C7763	C7763	C7763	C7763	C7763	C7763
5 SLEEVE *	A2-3905	A2-3905	A2-3905	A2-3905	A2-3905	A2-3905	A2-3905	A2-3905
6 GASKET *	D5450	D5450	D5450	D5450	D5450	D5450	D5450	D5450
7 SHAFT SEAL *	3179	3179	3179	3179	3179	3179	3179	3179
8 HEAD (CAST IRON) HEAD (BRONZE)	D2-1478 D2-1480	D2-1478 D2-1480	D2-1478 D2-1480	D2-1478 D2-1480	D2-1478 D2-1480	D2-1478 D2-1480	D2-1478 D2-1480	D2-1478 D2-1480
9 MOTOR	Contact Dunham-Bush, Inc., Marshalltown, Iowa							
10 SLINGER	C10038	C10038	C10038	C10038	C10038	C10038	C10038	C10038
11 SHIELD	C8958	C8958	C8958	C8958	C8958	C8958	C8958	C8958
12 GASKET *	A2-3020	A2-3020	A2-3020	A2-3020	A2-3020	A2-3020	A2-3020	A2-3020

NOTES: 1. NON-STANDARD pump parts are not shown. When ordering repair parts, refer to page 1 of this catalog.
2. * = These parts are required when replacing shaft seal.

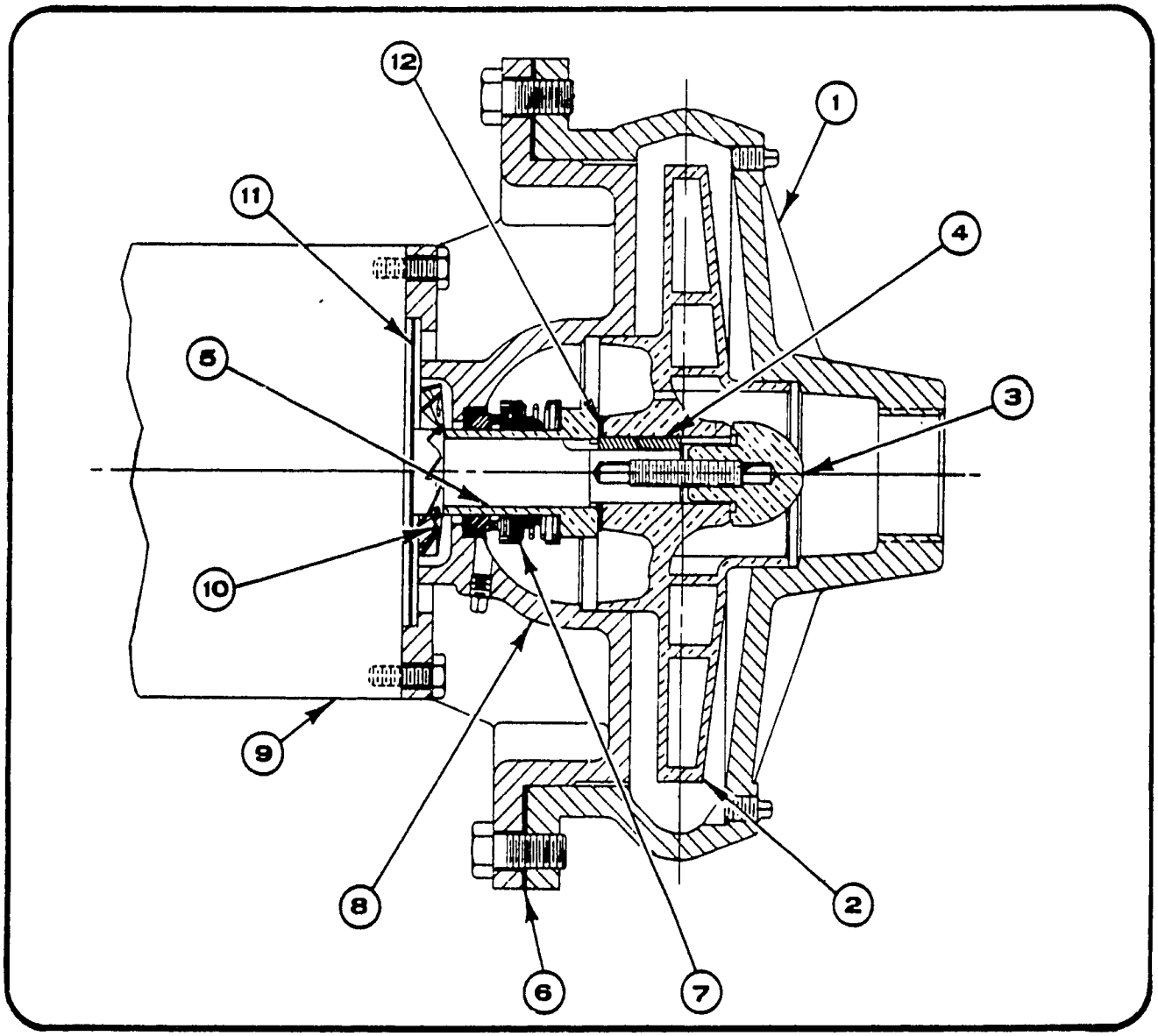

A9 PUMP AND PARTS LIST SERIES A - 3 HP

PART NUMBER AND DESCRIPTION	3 HP 1" 3ϕ A9D2A	3 HP 1" 3ϕ A9C2A	3 HP 1¼" 3ϕ A9D1A	3 HP 1¼" 3ϕ A9D2A	3 HP 2" 3ϕ A9D1A	3 HP 2½" 3ϕ A9D1A
1 CASE (CAST IRON) CASE (BRONZE)	F541 D2-76	F541 D2-76	F540 D2-74	F540 D2-74	F544 D2-80	F545 D2-79
2 IMPELLER (BRONZE)	C2-3212X 5¼"	C2-3211X 6 1/16"	C2-3213X 8¼"	C2-3213X 4 7/16"	C2-3214X 7 1/16"	C2-3215X 6¾"
3 STUD & NUT ASSEMBLY	C10035 A2-3898	C10035 A2-3898	C10035 A2-3898	C10035 A2-3898	C10035 A2-3898	C10035 A2-3898
4 KEY	C7763	C7763	C7763	C7763	C7763	C7763
5 SLEEVE *	A2-3905	A2-3905	A2-3905	A2-3905	A2-3905	A2-3905
6 GASKET *	D5450	D5450	D5450	D5450	D5450	D5450
7 SHAFT SEAL *	3179	3179	3179	3179	3179	3179
8 HEAD (CAST IRON) HEAD (BRONZE)	D2-1478 D2-1480	D2-1478 D2-1480	D2-1478 D2-1480	D2-1478 D2-1480	D2-1478 D2-1480	D2-1478 D2-1480
9 MOTOR	Contact Dunham-Bush, Inc., Marshalltown, Iowa					
10 SLINGER	C10038	C10038	C10038	C10038	C10038	C10038
11 SHIELD	C8958	C8958	C8958	C8958	C8958	C8958
12 GASKET *	A2-3020	A2-3020	A2-3020	A2-3020	A2-3020	A2-3020

NOTES: 1. NON-STANDARD pump parts are not shown. When ordering repair parts, refer to page 1 of this catalog.
2. * = These parts are required when replacing shaft seal.

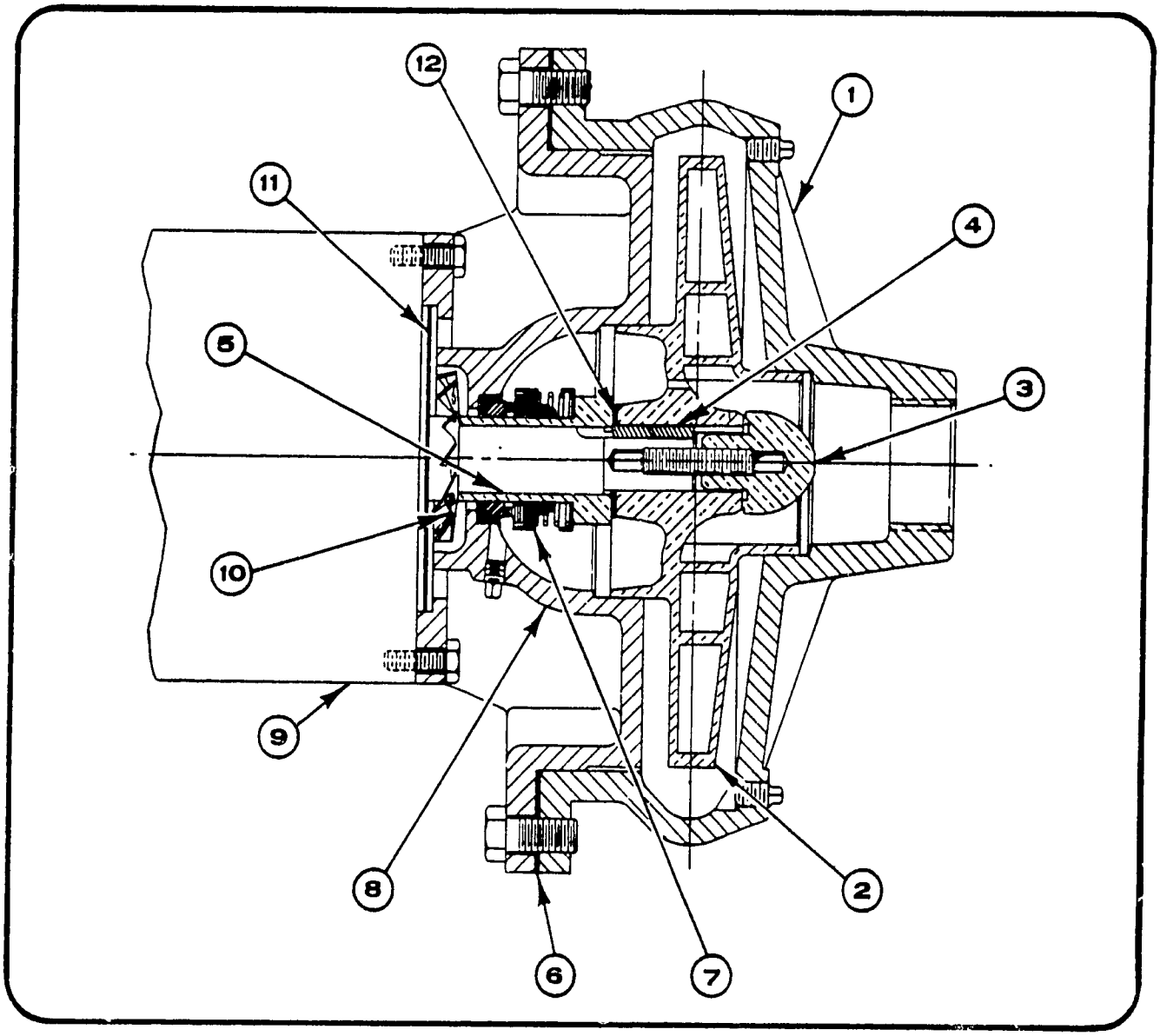

A9 PUMP AND PARTS LIST SERIES A – 5 HP

PART NUMBER AND DESCRIPTION	5 HP 1" 3ϕ A9C2A	5 HP 1" 3ϕ A9D2A	5 HP 1¼" 3ϕ A9D2A	5 HP 2" 3ϕ A9D1A	5 HP 2" 3ϕ A9D2A	5 HP 2½" 3ϕ A9D1A	5 HP 2½" 3ϕ A9D2A
1 CASE (CAST IRON) CASE (BRONZE)	F541 D2-76	F541 D2-76	F540 D2-74	F544 D2-80	F544 D2-80	F545 D2-79	F545 D2-79
2 IMPELLER (BRONZE)	C2-3211X $6^{9}/_{16}$"	C2-3212X $5^{7}/_{8}$"	C2-3213X $5^{15}/_{32}$"	C2-3214X $8^{7}/_{16}$"	C2-3214X $4^{15}/_{16}$"	C2-3215X $7^{15}/_{16}$"	C2-3215X $4^{3}/_{4}$"
3 STUD & NUT ASSEMBLY	C10035 A2-3898	C10035 A2-3898	C10035 A2-3898	C10035 A2-3899	C10035 A2-3899	C10035 A2-3899	C10035 A2-3899
4 KEY	C7763	C7763	C7763	C7763	C7763	C7763	C7763
5 SLEEVE *	A2-3905	A2-3905	A2-3905	A2-3905	A2-3905	A2-3905	A2-3905
6 GASKET *	D5450	D5450	D5450	D5450	D5450	D5450	D5450
7 SHAFT SEAL*	3179	3179	3179	3179	3179	3179	3179
8 HEAD (CAST IRON) HEAD (BRONZE)	D2-1478 D2-1480	D2-1478 D2-1480	D2-1478 D2-1480	D2-1478 D2-1480	D2-1478 D2-1480	D2-1478 D2-1480	D2-1478 D2-1480
9 MOTOR	Contact Dunham-Bush, Inc., Marshalltown, Iowa						
10 SLINGER	C10038	C10038	C10038	C10038	C10038	C10038	C10038
11 SHIELD	C8958	C8958	C8958	C8958	C8958	C8958	C8958
12 GASKET *	A2-3020	A2-3020	A2-3020	A2-3020	A2-3020	A2-3020	A2-3020

NOTES: 1. NON-STANDARD pump parts are not shown. When ordering repair parts, refer to page 1 of this catalog.
2. * = These parts are required when replacing shaft seal.

1162

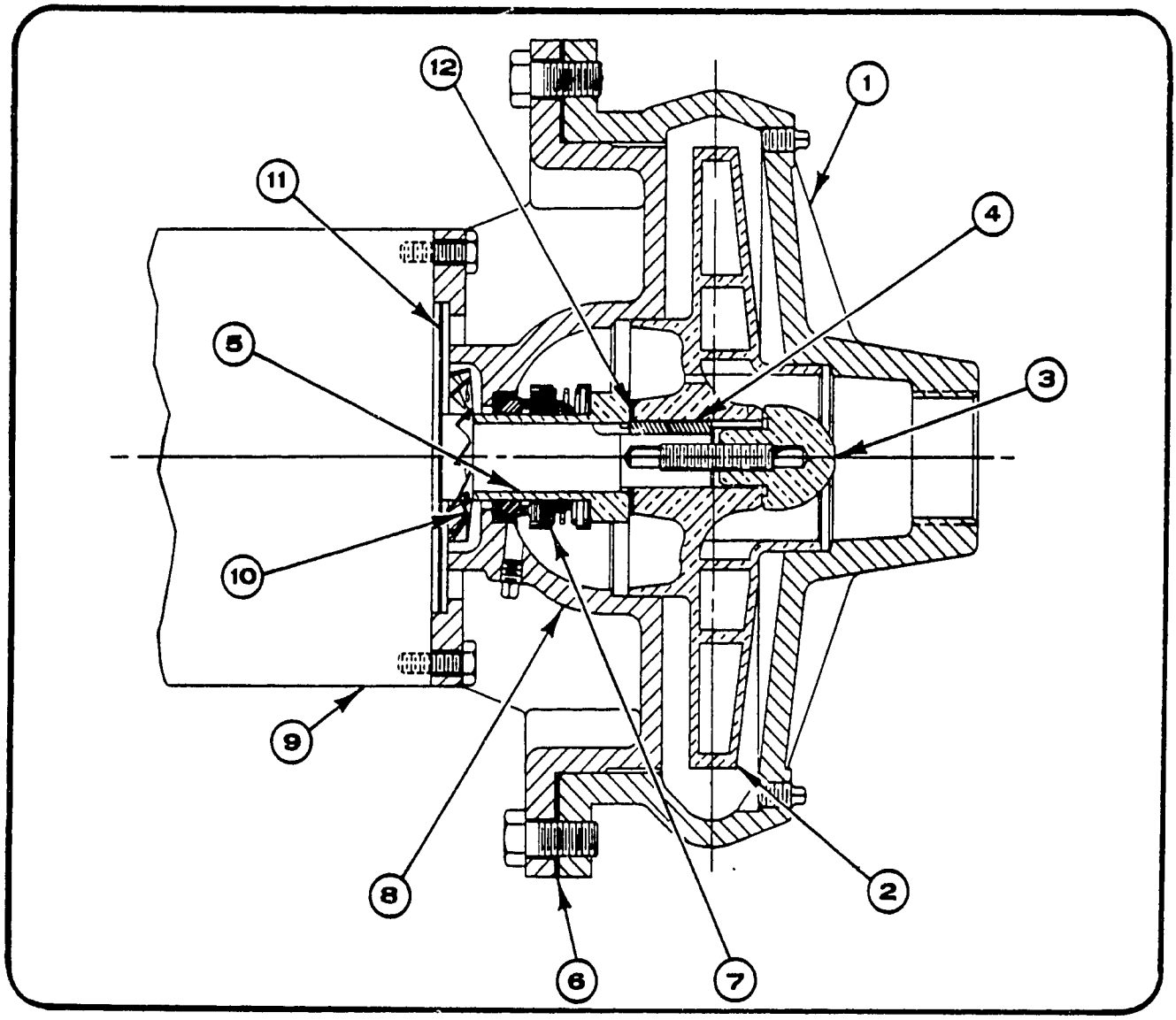

A9 PUMP AND PARTS LIST
SERIES A - 7½ HP

PART NUMBER AND DESCRIPTION	7½ HP 1¼" 3φ A9D2A	7½ HP 2" 3φ A9D2A	7½ HP 2½" 3φ A9D1A	7½ HP 2½" 3φ A9D1A
1 CASE (CAST IRON) CASE (BRONZE)	F540 D2-74	F544 D2-80	F545 D2-79	F545 D2-79
2 IMPELLER (BRONZE)	C2-3213X $5^{15}/_{16}$"	C2-3214X $5^{9}/_{16}$"	C2-3215X 9"	C2-3215X $5^{5}/_{16}$"
3 STUD & NUT ASSEMBLY	C10035 A2-3899	C10035 A2-3899	C10035 A2-3899	C10035 A2-3899
4 KEY	C7763	C7763	C7763	C7763
5 SLEEVE *	A2-3905	A2-3905	A2-3905	A2-3905
6 GASKET *	D5450	D5450	D5450	D5450
7 SHAFT SEAL*	3179	3179	3179	3179
8 HEAD (CAST IRON) HEAD (BRONZE)	D2-1478 D2-1480	D2-1478 D2-1480	D2-1481 D2-1483	D2-1478 D2-1480
9 MOTOR	Contact Dunham-Bush, Inc., Marshalltown, Iowa			
10 SLINGER	C1038	C1038	C1038	C1038
11 SHIELD	C8958	C8958	D5478	C8958
12 GASKET *	A2-3020	A2-3020	A2-3020	A2-3020

NOTES:
1. NON-STANDARD pump parts are not shown. When ordering repair parts, refer to page 1 of this catalog.
2. * = These parts are required when replacing s..aft seal.

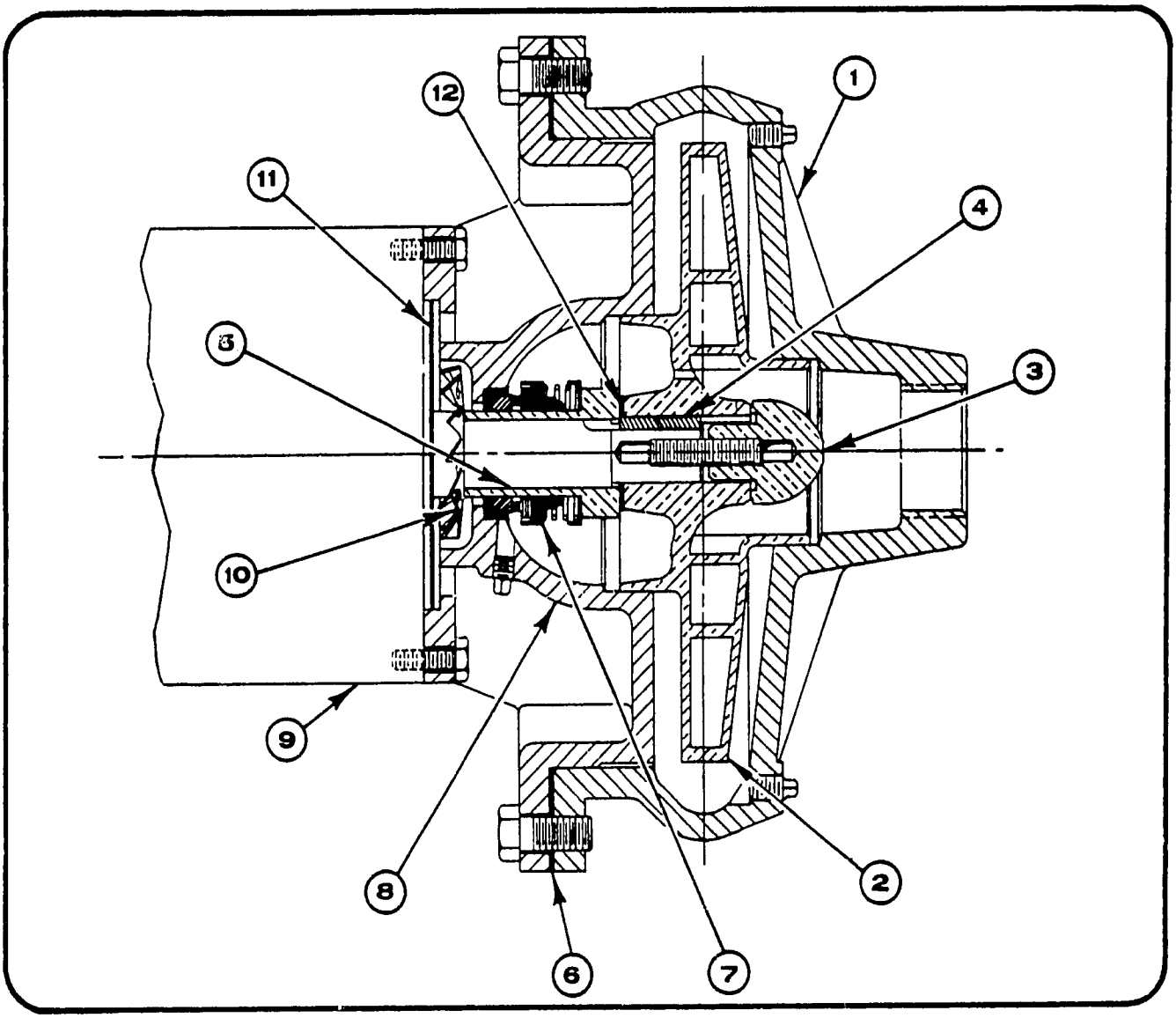

A9 PUMP AND PARTS LIST
SERIES A – 10 HP AND 15 HP

PART NUMBER AND DESCRIPTION	10 HP 1¼" 3ϕ A9D2A	10 HP 2" 3ϕ A9D2A	10 HP 2½" 3ϕ A9D2A	15 HP 2" 3ϕ A9D2A
1 CASE (CAST IRON) CASE (BRONZE)	F540 D2-74	F544 D2-80	F545 D2-79	F544 D2-80
2 IMPELLER (BRONZE)	C2-3213X $6^3/_8$"	C2-3214X $5^{29}/_{32}$"	C2-3215X $5^{21}/_{32}$"	C2-3214X $6^5/_{16}$"
3 STUD & NUT ASSEMBLY	C10035 A2-3899	C10035 A2-3899	C10035 A2-3899	C10035 A2-3899
4 KEY	C7763	C7763	C7763	C7763
5 SLEEVE *	A2-3905	A2-3905	A2-3905	A2-3905
6 GASKET *	D5450	D5450	D5450	D5450
7 SHAFT SEAL *	3179	3179	3179	3179
8 HEAD (CAST IRON) HEAD (BRONZE)	D2-1481 D2-1483	D2-1481 D2-1483	D2-1481 D2-1483	D2-1481 D2-1483
9 MOTOR	Contact Dunham-Bush, Inc., Marshalltown, Iowa			
10 SLINGER	C1038	C1038	C1038	C1038
11 SHIELD	D5478	D5478	D5478	D5478
12 GASKET *	A2-3020	A2-3020	A2-3020	A2-3020

NOTES: 1. NON-STANDARD pump parts are not shown. When ordering repair parts, refer to page 1 of this catalog.
2. * = Those parts are required when replacing shaft seal.

1170

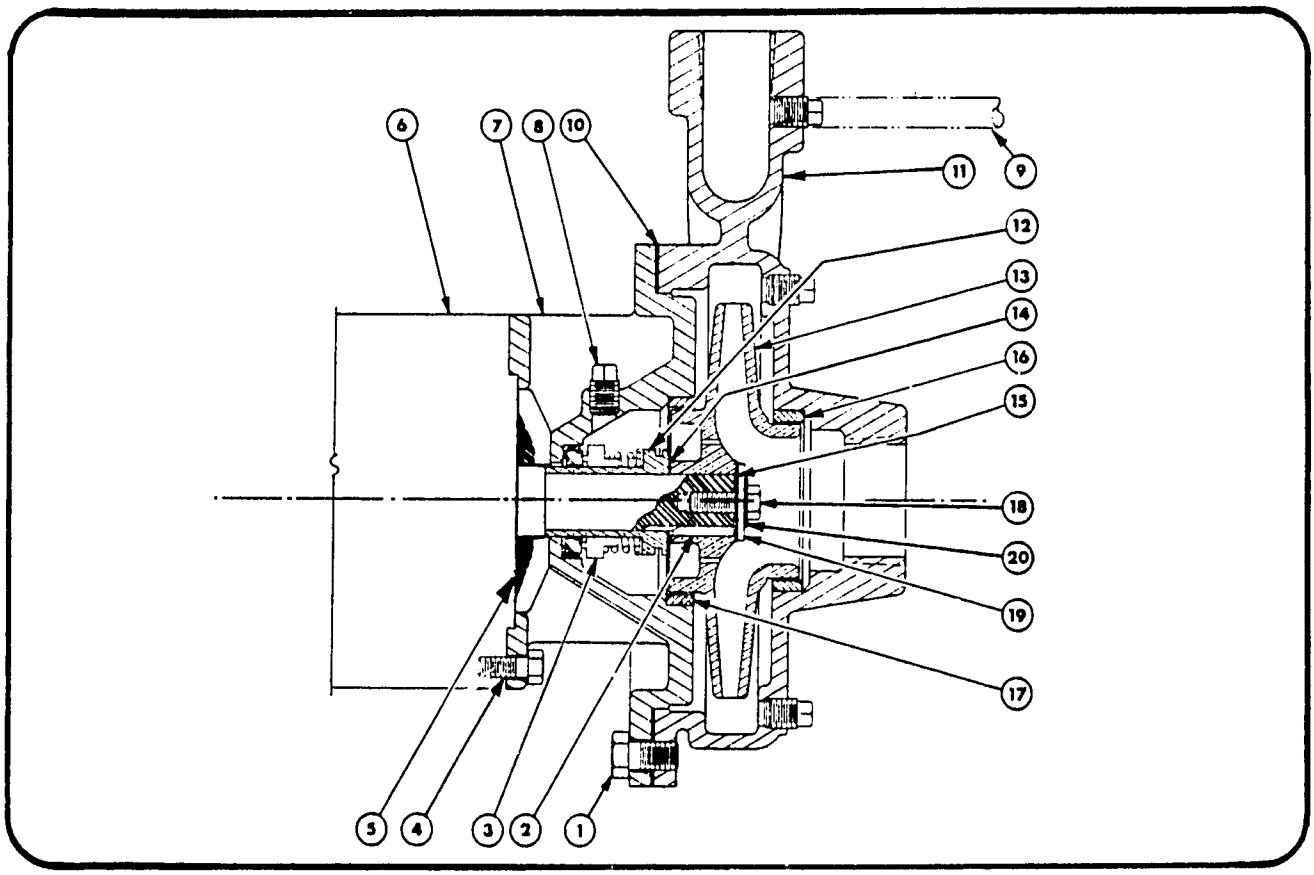

A7 PUMP AND PARTS LIST - ¾", 1¼" AND 1½" DIA. DISCHARGE

PART NUMBER & DESCRIPTION		¾" A7B	1¼" A7B	1¼" A7C	1½" A7B	1½" A7C
1.	Screw – Cap	P - 150				
2.	Key – Impeller	Supplied with Motor				
3.	Seal – Mechanical *	3179	3179	3179	3179	3179
	Seal – 250# Optional	Contact Dunham-Bush, Inc., Marshalltown, Iowa				
4.	Screw – Cap	P-142	P-142	P-150	P-142	P-150
5.	Slinger	Supplied with Motor				
6	Motor	Contact Dunham-Bush, Inc., Marshalltown, Iowa				
7.	Head, C.I.	C2-2336	C2-2336	C2-2337	C2-2336	C2-2337
	Head, Bronze	C2-2660	C2-2660	C2-2661	C2-2660	C2-2661
	Head, C.I. w/wear Rings	C2-2345	C2-2345	C2-2346	C2-2345	C2-2346
8.	Fitting – Compression Straight	P - 194 (Optional)				
	Fitting – Elbow, Not shown	P - 195 (Optional)				
	Plug – Pipe	(5) P - 196				
9.	Tube	Copper 1/8" OD (Optional)				
10.	Gasket – Case *	C2-2343				
11.	Case, C.I.	C2-2390	C2-2335		C2-2377	
	Case, (Bronze)	C2-2665	C2-2666		C2-2667	
	Case, C.I. w/wear Rings	C2-2389	C2-2347		C2-2376	
	Case, 250# C.I.	Not Available				
	Case, 250# Bronze	Not Available				
	Case, 250# C.I. w/wear Rings	Not Available				
12.	Sleeve *	A2-3018	A2-3018	A2-3018	A2-3018	A2-3018
	Seal – 250# Optional	Contact Dunham-Bush, Inc., Marshalltown, Iowa				
13.	Impeller	C2-2378	C2-2340	C2-2340	C2-2380	C2-2380
14.	Gasket (Impeller – Sleeve) *	A2-3020	A2-3020	A2-3020	A2-3020	A2-3020
15.	Gasket (Impeller – Head) *	A2-3022-1				
16.	Ring – Case Wear Ring	A2-3026	A2-3015		A2-3027	
17.	Ring – Head Wear Ring	A2-3016				
18.	Screw – Impeller	3312	3312	3312	3312	3312
19.	Washer – Impeller	A2-3021-1				
20.	Washer – Sealing	3313	3313	3313	3313	3313

NOTES: 1. NON-STANDARD pump parts are not shown. When ordering repair parts, refer to page 1 of this catalog.
2. * = These parts are required when replacing shaft seal.

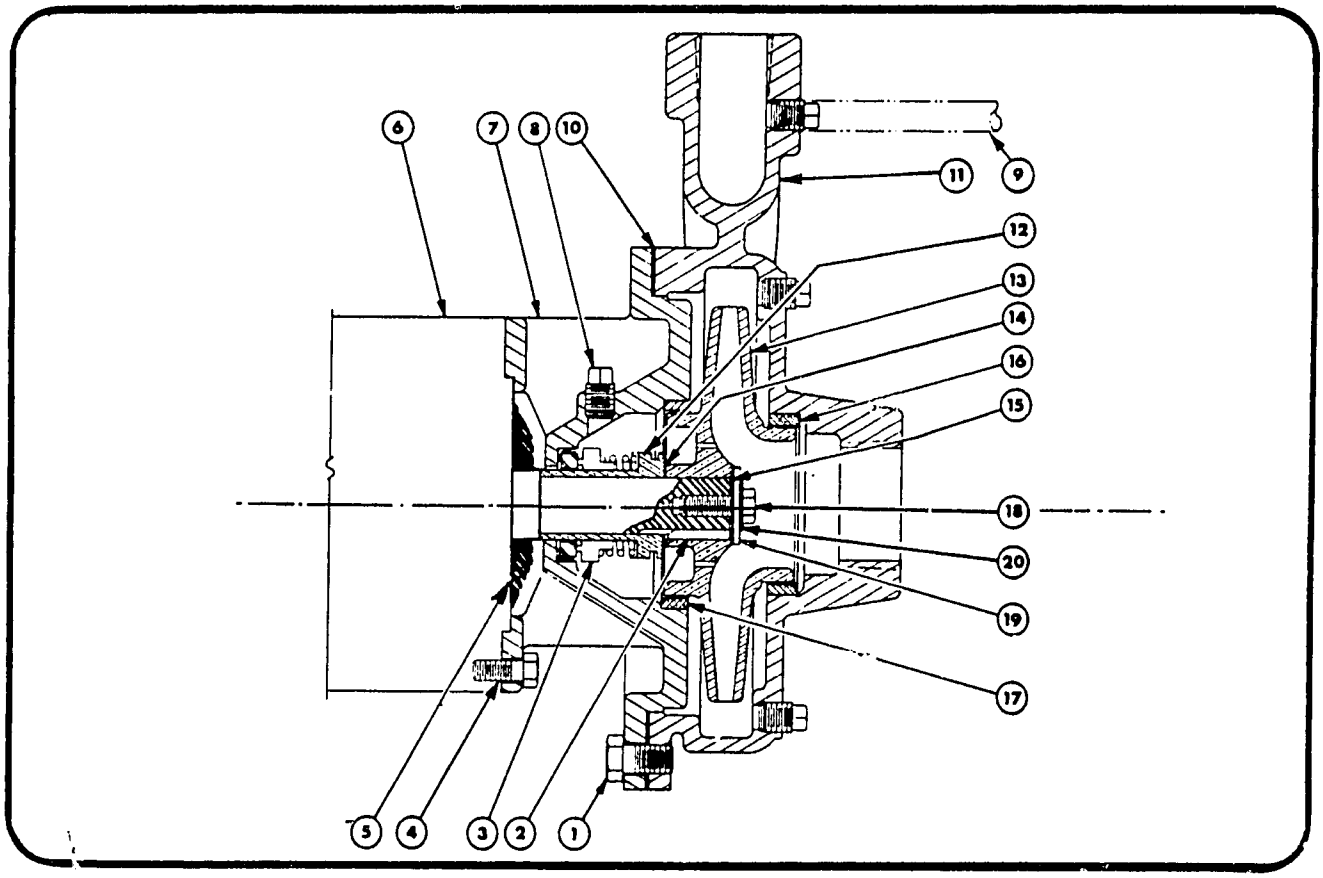

A7 PUMP AND PARTS LIST – 2" AND 2½" DIA. DISCHARGE

PART NUMBER & DESCRIPTION		2" A7D	2" A7E	2" A7F	2½" A7D	2½" A7E	2½" A7E H.C.	2½" A7F
1.	Screw – Cap	P - 150						
2.	Key – Impeller	Supplied with Motor						
3.	Seal – Mechanical *	3179	3179	3291	3179	3179	3179	3291
	Seal – 250# Optional	Contact Dunham-Bush, Inc., Marshalltown, Iowa						
4.	Screw – Cap	P - 142	P - 150	P - 150	P - 142	P - 150	P - 150	P - 150
5.	Slinger	Supplied with Motor						
6.	Motor	Contact Dunham-Bush, Inc., Marshalltown, Iowa						
7.	Head, C.I.	C2-2384	C2-2386	C2-2388	C2-2384	C2-2386	C2-2386	C2-2388
	Head, Bronze	C2-2662	C2-2663	C2-2664	C2-2662	C2-2663	C2-2663	C2-2664

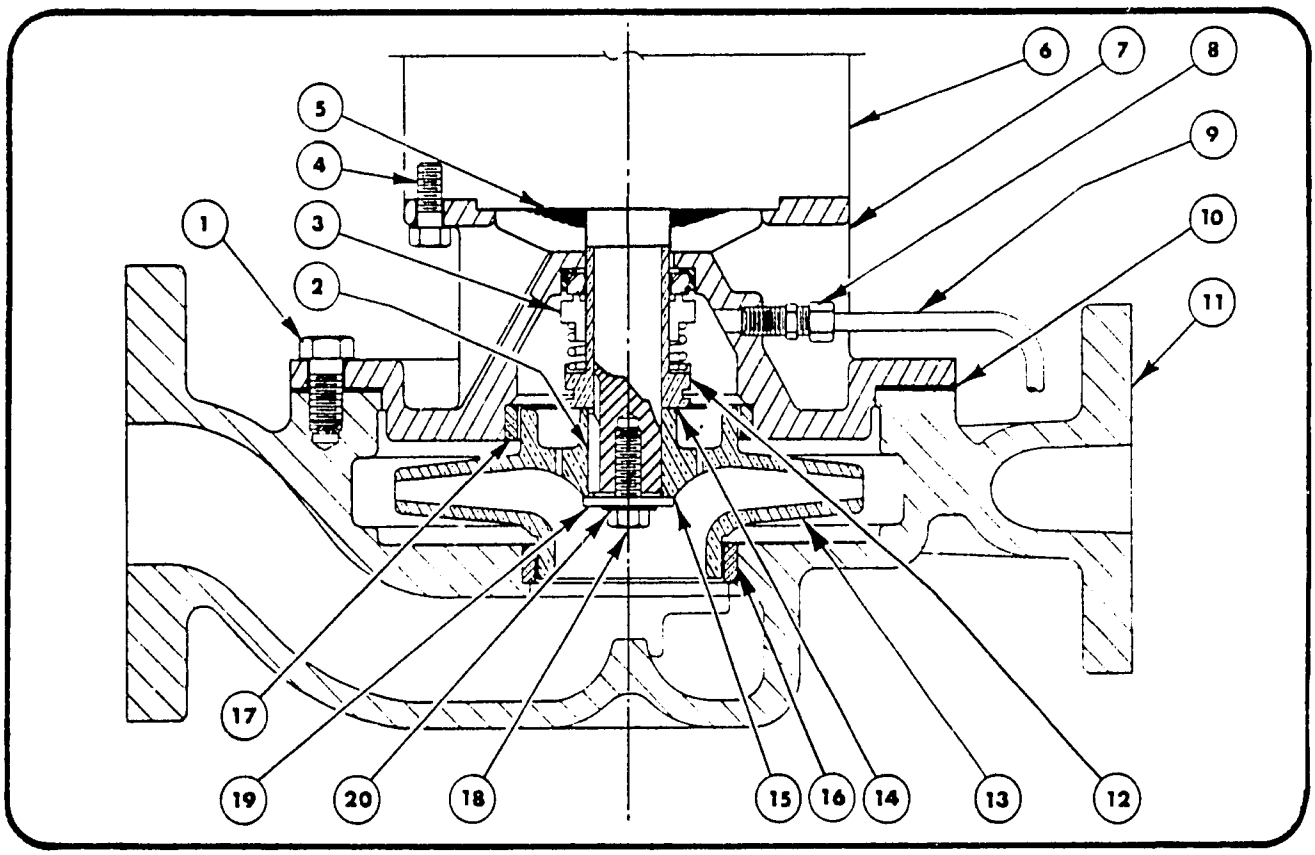

PM7 PUMP AND PARTS LIST – 1", 1¼" AND 1½" DIA. DISCHARGE

PART NUMBER & DESCRIPTION		1" PM7B	1¼" PM7B	1¼" PM7C	1½" PM7B	1½" PM7C
1.	Screw - Cap	P - 150				
2.	Key - Impeller	Supplied with Motor				
3.	Seal - Mechanical *	3179	3179	3179	3179	3179
	Seal 250# Optional	Contact Dunham-Bush, Inc. – Marshalltown, Iowa				
4.	Screw - Cap	P - 142	P - 142	P - 150	P - 142	P - 150
5.	Slinger	Supplied with Motor				
6.	Motor	Contact Dunham-Bush, Inc. – Marshalltown, Iowa				
	Head Cap	C2-2236	C2-2236	C2-2237	C2-2236	C2-2237

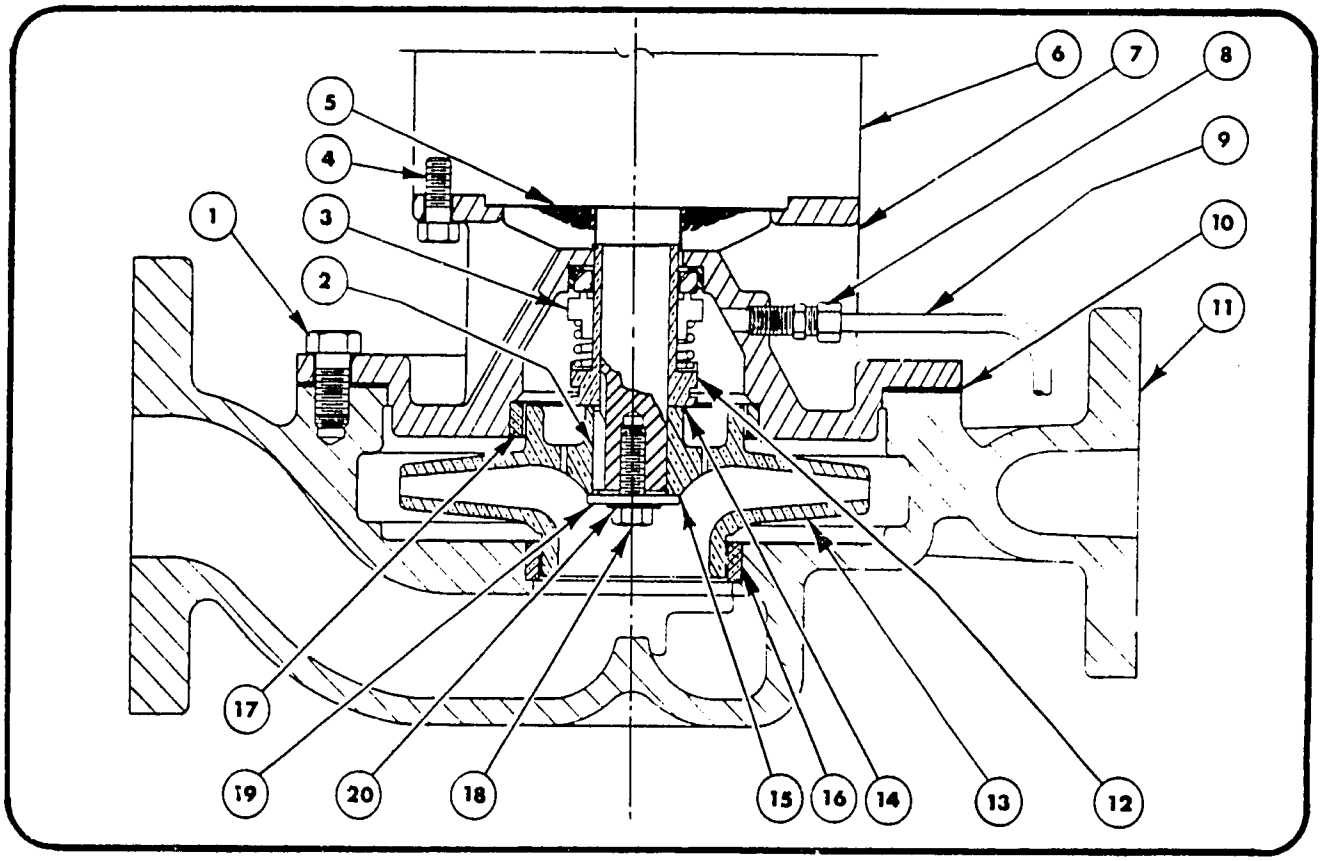

PM7 PUMP AND PARTS LIST – 2" AND 2½" DIA. DISCHARGE

PART NUMBER & DESCRIPTION		2" PM7D	2" PM7E	2" PM7F	2½" PM7D	2½" PM7E	2½" PM7E H.C.	2½" PM7F
1.	Screw - Cap	P - 150						
2.	Key - Impeller	Supplied with Motor						
3.	Seal - Mechanical *	3179	3179	3291	3179	3179	3179	3291
	Seal 250# Optional	Contact Dunham-Bush, Inc. – Marshalltown, Iowa						
4.	Screw - Cap	P - 142	P - 150	P - 150	P - 142	P -150	P - 150	P -150
5.	Slinger	Supplied with Motor						
6.	Motor	Contact Dunham-Bush, Inc. – Marshalltown, Iowa						

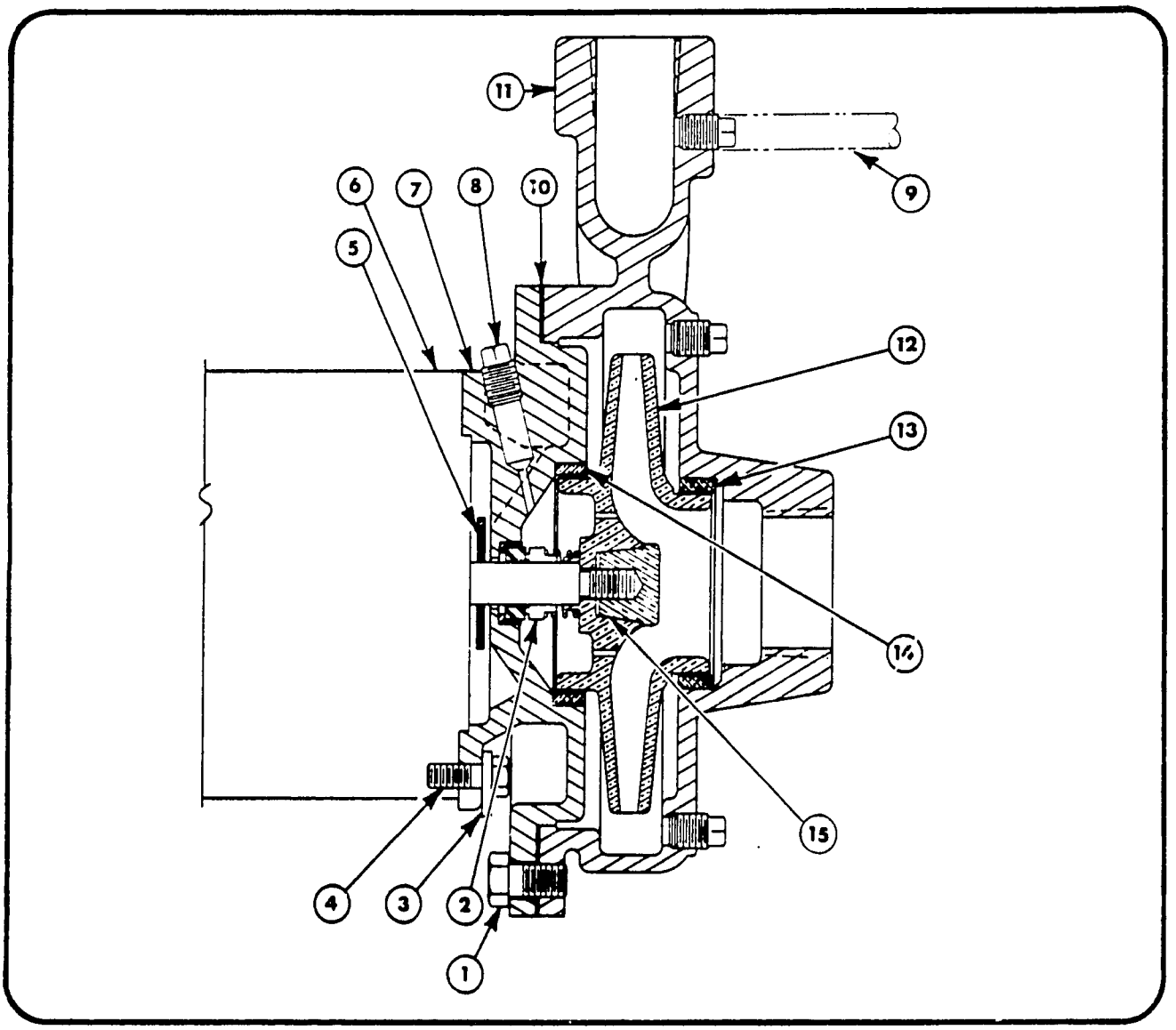

A7A PUMP AND PARTS LIST – ¾", 1¼" AND 1½" DIA. DISCHARGE

	PART NUMBER & DESCRIPTION	¾" A7A	1¼" A7A	1½" A7A
1.	Screw–Cap	P - 150	P - 150	P - 150
2.	Seal–Mechanical *	472	472	472
3.	Retainer–Head	A2-3023	A2-3023	A2-3023
4.	Screw–Cap	P - 142	P - 142	P - 142
5.	Slinger	C8854	C8854	C8854
6.	Motor	Contact Dunham-Bush, Inc. Marshalltown, Iowa		
7.	Head, C.I.	C2-2342	C2-2342	C2-2342
	Head, Bronze	C2-2659	C2-2659	C2-2659

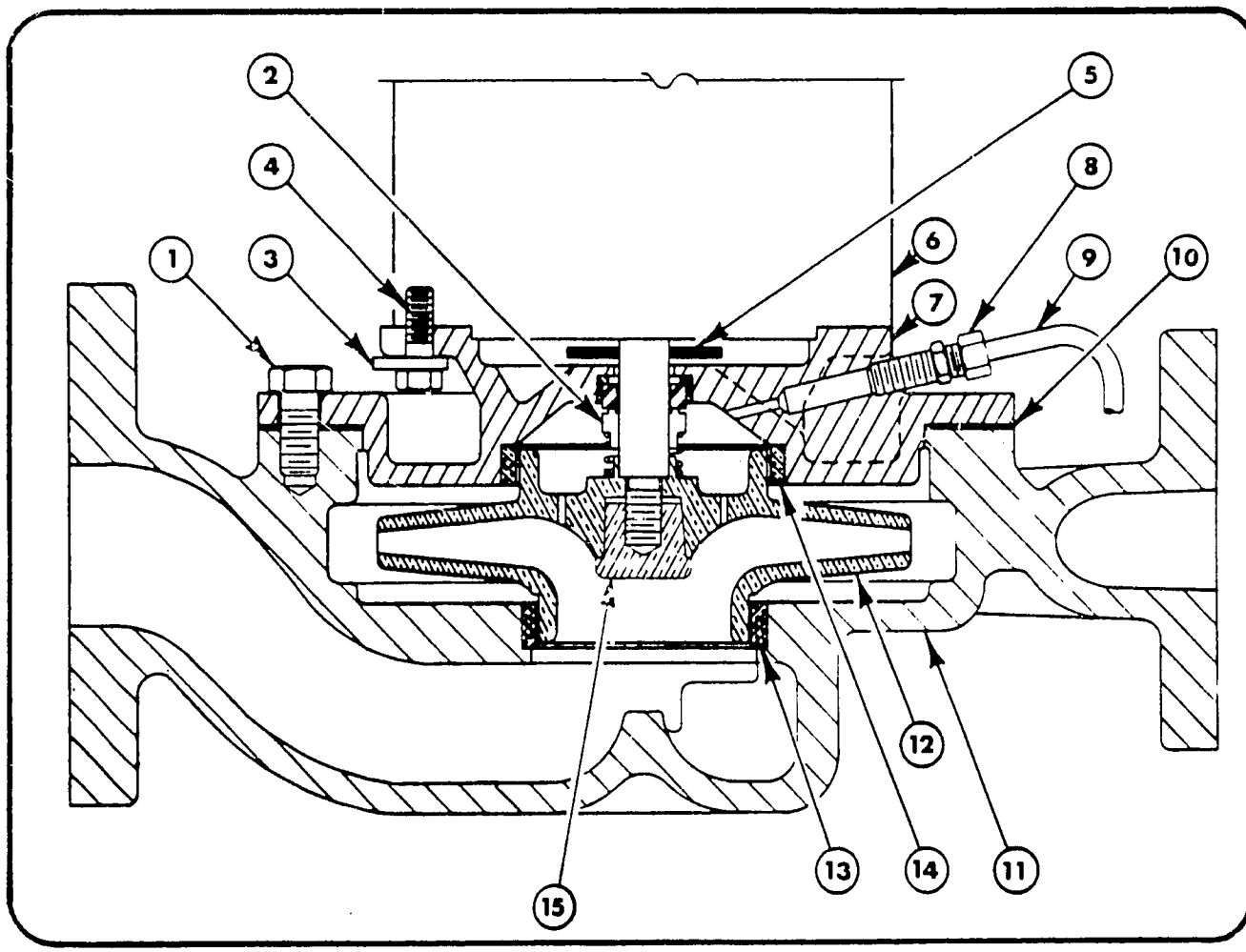

PM7A PUMP AND PARTS LIST
1", 1¼" AND 1½" DIA. DISCHARGE

PART NUMBER & DESCRIPTION		1" PM7A	1¼" PM7A	1½" PM7A
1.	Screw–Cap	P - 150	P - 150	P - 150
2.	Seal–Mechanical *	472	472	472
3.	Retainer–Head	A2-3023	A2-3023	A2-3023
4.	Screw–Cap	P - 142	P - 142	P - 142
5.	Slinger	C8854	C8854	C8854
6.	Motor	Contact Dunham-Bush, Inc., Marshalltown, Iowa		

DUNHAM-BUSH

AIR CONDITIONING, REFRIGERATION, HEATING PRODUCTS AND ACCESSORIES

MAIN OFFICES AND FACTORIES

MAIN OFFICES
175 South Street
West Hartford, Connecticut
06110

WEST HARTFORD DIVISION
179 South Street
West Hartford, Connecticut
06110

HARRISONBURG DIVISION
101 Burgess Road
Harrisonburg, Virginia
22801

MARSHALLTOWN DIVISION
811 East Main Street
Marshalltown, Iowa
50158

SUBSIDIARIES

DUNHAM-BUSH of Canada Limited
140 Wendell Avenue
Weston, Ontario

DUNHAM-BUSH, LTD.
Fitzherbert Road, Farlington
Portsmouth, Hampshire, England

DUNHAM-BUSH INTERNATIONAL: 175 South Street, West Hartford, Connecticut 06110, U.S.A.
CABLE: DUNBUSH or TELEX: 994469

SALES OFFICES

ALABAMA
Birmingham
Mobile

ARIZONA
Phoenix

ARKANSAS
Little Rock

CALIFORNIA
Arcadia
Los Angeles
San Diego
San Francisco

COLORADO
Denver

CONNECTICUT
Hartford
New Haven

FLORIDA
Jacksonville
Miami

IOWA
DesMoines

KANSAS
Lenexa

KENTUCKY
Louisville

LOUISIANA
New Orleans
Shreveport

MAINE
Lewiston

MARYLAND
Baltimore
Silver Spring

MASSACHUSETTS
Boston
Springfield

MICHIGAN
Detroit

NEBRASKA
Omaha

NEW JERSEY
Little Falls
South Amboy
Union

NEW MEXICO
Albuquerque

NEW YORK
Albany
Buffalo
New York City
Rochester
Syracuse

NORTH CAROLINA
Charlotte
Greensboro

OHIO
Akron
Cincinnati

PENNSYLVANIA (Cond't)
Pittsburgh
Pittston

RHODE ISLAND
Providence

SOUTH CAROLINA
Columbia
Greenville

TENNESSEE
Chattanooga
Memphis
Knoxville
Nashville

TEXAS
Austin
Corpus Christie
Dallas
Fort Worth
El Paso
Houston
Lubbock

Exhibit 4-8

FORM NO. 17448P
EFFECTIVE
MARCH 1981
SUPERSEDES 17448N

DUNHAM-BUSH

A5, A7, PM7 and A9 CENTRIFUGAL PUMP REPAIR PARTS LIST PRICES

PRICES AND SPECIFICATIONS SUBJECT TO CHANGE WITHOUT NOTICE.
FOR TERMS OF SALE REFER TO LATEST REVISION OF FORM 1278

REFER TO FORM 2505 FOR DESCRIPTION OF PARTS AND NUMBERS

PART NUMBER	LIST PRICE
472	$ 25.05
860	63.10
861	73.40
1112	.70
3179	80.20
3199	103.00
3291	148.00
3292	2.30
3293	2.35
3312	2.30
3313	1.75
A2-51	73.40
A2-G72	43.45
A2-3015	45.90
A2-3016	45.90
A2-3018	24.10
A2-3020	1.20
A2-3021-1	5.60
A2-3021-2	16.85
A2-3022-1	1.20
A2-3022-2	5.85

PART NUMBER	LIST PRICE
C2-2344	$264.00
C2-2345	310.00
C2-2346	344.00
C2-2347	344.00
C2-2376	495.00
C2-2377	286.00
C2-2378	240.00
C2-2379	255.00
C2-2380	276.00
C2-2381	293.00
C2-2382	293.00
C2-2383	428.00
C2-2384	179.00
C2-2385	436.00
C2-2386	160.00
C2-2387	436.00
C2-2388	160.00
C2-2389	323.00
C2-2390	268.00
C2-2392	339.00
C2-2498	311.00

PART NUMBER	LIST PRICE
C10062	$ 10.80
C10063	10.80
C10063SS	40.70
D2-74	765.00
D2-76	797.00
D2-77	550.00
D2-78	611.00
D2-79	918.00
D2-80	918.00
D2-1255	424.00
D2-1256	300.00
D2-1265	469.00
D2-1266	368.00
D2-1267	469.00
D2-1268	310.00
D2-1269	469.00
D2-1270	355.00
D2-1271	687.00
D2-1272	344.00
D2-1273	687.00
D2-1274	332.00
D2-1275	882.00

PART NUMBER	LIST PRICE
D2-1354	$1,147.00
D2-1355	1,147.00
1356	1,147.00
7	1,147.00
4-5/16	91.65
x 4-9/16	91.65
3 x 5	91.65
D5195 x 4-1/2	91.65
D5197 x 3-5/16	91.65
D5197 x 4-5/16	91.65
D5199 x 4-1/8	91.65
D5199 x 4-1/4	91.65
D5202 x 4-1/8	91.65
D5203 x 3 1/8	91.65
D5203 x 3-1/2	91.65
D5203 x 3-7/8	91.65
D5203 x 4-3/16	91.65
D5352	2.85
D5450	6.60
D5478	15.15
E6041	79.35
E6042	61.10
E6046 x 1-1/2	79.35
E6047 x 2	79.35

PART NUMBER	LIST PRICE
E6048	$ 79.35
E6077	134.00
E6078	159.00
E6079	153.00
E6080	185.00
E6081	122.00
E6141 x 5-1/4	257.00
E6141 x 5-7/8	257.00
E6181 x 4-7/16	257.00
E6181 x 4-15/16	257.00
E6181 x 5-15/16	257.00
E6181 x 5-15/32	257.00
E6181 x 6-3/8	257.00
E6181 x 7-3/16	276.00
E6181 x 8-1/4	276.00
E6184 x 3-15/16	257.00
E6184 x 4-1/4	257.00
E6188 x 4-15/16	257.00
E6188 x 5-3/8	257.00
E6188 x 5-9/16	257.00
E6188 x 5-29/32	257.00
E6188 x 6-1/2	257.00
E6188 x 6-5/16	257.00
E6188 x 7-1/16	276.00

PART NUMBER	LIST PRICE
E6188 x 8-7/16	$ 276.00
E6204 x 4-3/4	257.00
E6204 x 5-5/16	257.00
E6204 x 5-21/32	257.00
E6204 x 6-1/8	257.00
E6204 x 6-3/4	257.00
E6204 x 7-15/16	276.00
E6204 x 9	276.00
F539	91.65
F540	137.00
F541	122.00
F544	146.00
F545	153.00
F546	107.00
P2	1.15
P6	1.15
P116	2.30
P142	4.10
P150	1.20
P189	4.10
P190	4.55
P192	1.20
P193	1.75
P194	.75
P195	1.25
P196	1.10
1/8" OD Copper Tube	.60

C2-3211 x 6 1/16"	$ 276.00
C2-3211 x 6 9/16"	276.00
C2-3211 x 6 3/4	276.00
C2-3211 x 7 15/16"	276.00
C2-3211 x 8 7/16"	276.00

C2-3213 x 7 3/16"	$276.00
C2-3213 x 8 1/4 "	276.00
C2-3214 x 4 15/16"	257.00
C2-3214 x 5 3/8 "	257.00
C2-3214 x 5 29/32"	257.00

C2-3215 x 5 5/16"	$ 257.00
C2-3215 x 5 21/32"	257.00
C2-3215 x 6 1/8"	257.00
C2-3215 x 7 15/16"	276.00
C2-3215 x 9"	276.00

Exhibit H-9

FORM NO. 3440B

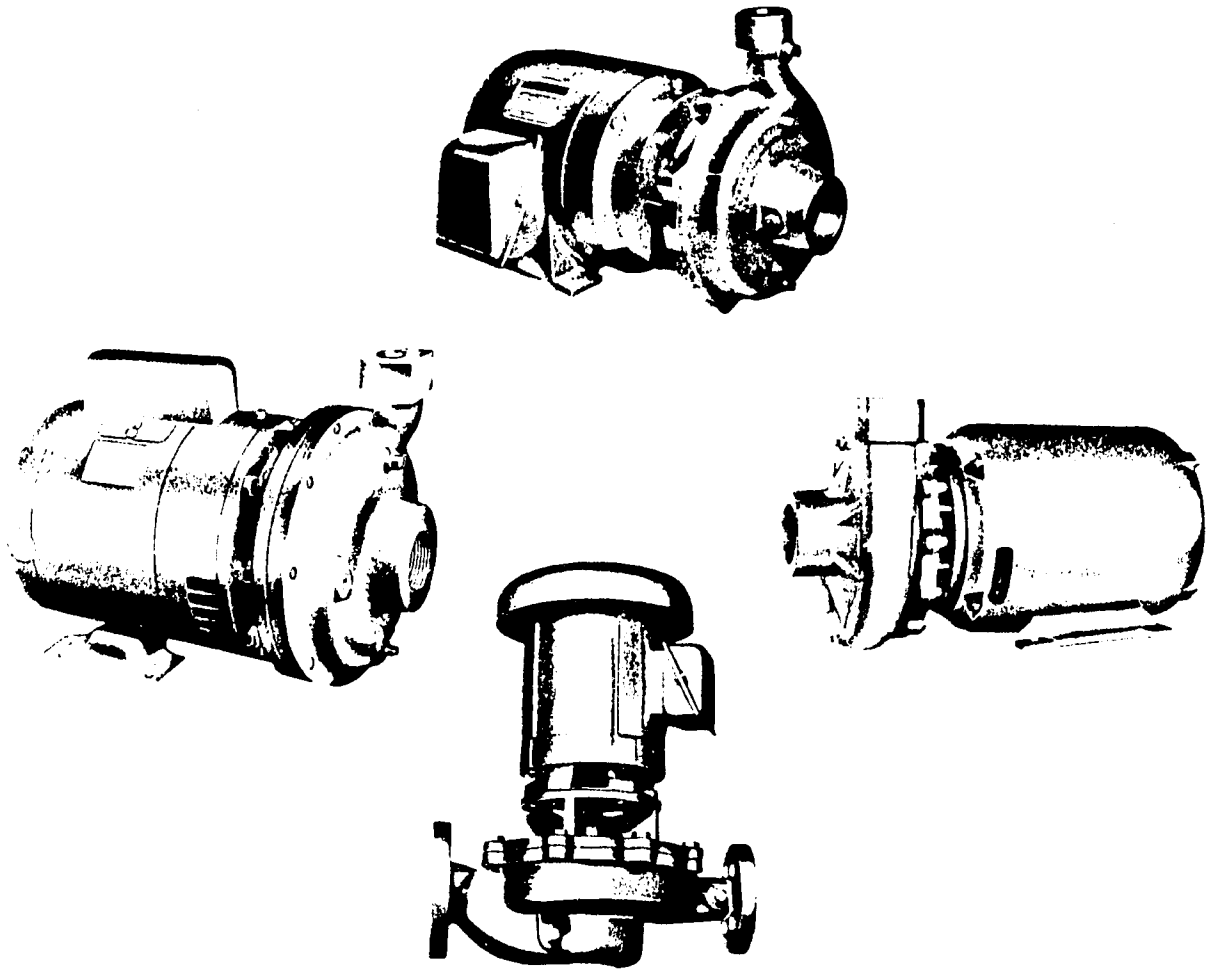

DUNHAM-BUSH

CENTRIFUGAL PUMPS
TYPE A5, A7, A9 AND PM7

Installation, Operation and Maintenance Instructions

180

CENTRIFUGAL PUMPS
TYPE A5, A7, A9 AND PM7

INDEX

DESCRIPTION	PAGE
INTRODUCTION	1
SECTION I INSTALLATION	
LOCATION	1
FOUNDATION	1
MOUNTING	1
PIPING	1
SUCTION PIPING	1
DISCHARGE, PIPING	2
PIPING FOR SPARE PUMPS	2
INSTALLING PUMP	2
SECTION II OPERATION	
PUMP STARTING	2 - 3
OPERATING AT REDUCED CAPACITY	3
OPERATING ROUTINE	3
STOPPING	3
SECTION III MAINTENANCE	
A5 PUMP DISASSEMBLY AND ASSEMBLY	3 - 4
A9 SERIES 'A' PUMP DISASSEMBLY AND ASSEMBLY	4 - 5
A7/PM7 DISASSEMBLY AND ASSEMBLY	5 - 7
A7A/PM7A DISASSEMBLY AND ASSEMBLY	7 - 9
SECTION IV TROUBLE SHOOTING, NOMENCLATURE, ORDERING PROCEDURE AND PARTS LIST	
TROUBLE SHOOTING	9
NOMENCLATURE	10
ORDERING PROCEDURE	10
A5 PUMPS AND PARTS LIST	
1/3 HP, 1/2 HP, AND 3/4 HP	11
1 HP, 1½ HP AND 2 HP	12
A9 SERIES 'A' PUMPS AND PARTS LIST	
1/2 HP, 3/4 HP AND 1 HP	13
1 1/2 HP	14
2 HP	15
3 HP	16
5 HP	17
7 1/2 HP	18
10 HP AND 15 HP	

INTRODUCTION

The Dunham-Bush Type A5, A7 and A9 are radially split, single stage, motor mounted centrifugal pumps. The PM7 is a radially split, single stage, close coupled pipe mounted centrifugal pump. These pumps are supplied with an end face mechanical shaft seal installed, which is especially selected for reliability and life on the particular pump application. All pumps are supplied as complete units including motor.

SECTION - 1
PUMP INSTALLATION

A. LOCATION

1. For satisfactory operation of any centrifugal pump it is necessary that adequate "Net Positive Suction Head" (NPSH) be available at the pump suction connection (NPSH is the total head in feet absolute, less the vapor pressure of the liquid in feet absolute, available to the pump). For this reason the pump should be located as close to the liquid source as possible.
2. Adequate head room should be provided for the use of installing equipment.
3. Adequate space should be allowed for inspection during pump operation.

B. FOUNDATION

1. The foundation must be solid and substantial enough to absorb mechanical vibration. In general concrete foundations are the most satisfactory and when used, bolts should be supplied which are imbedded for pump footing. Bolts should be long enough to insure proper tightening (minimum of six (6) threads should protrude beyond nut), and it is recommended that

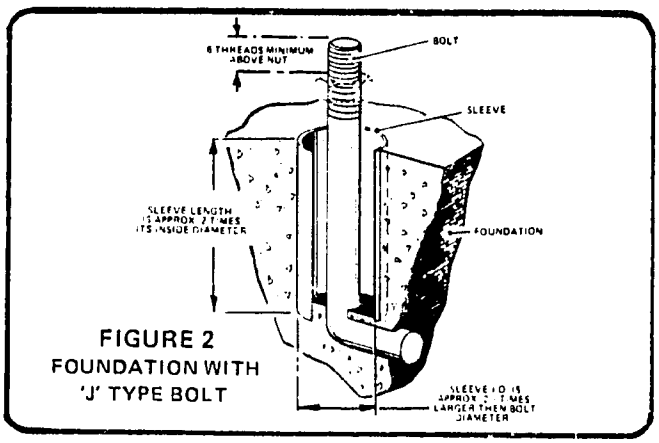

FIGURE 2
FOUNDATION WITH
'J' TYPE BOLT

C. MOUNTING PUMP

Foot Mounted

1. Uncrate the pump leaving all instructions attached and install at its' place of operation.
2. Locate the leveling plates and shims at each foundation bolt.
3. Level the motor perpendicular to shaft, shimming as

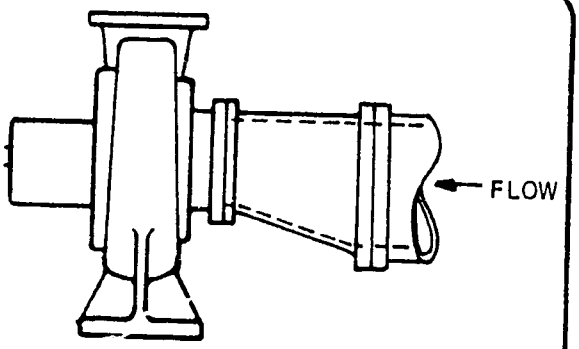

FIGURE 3
CORRECT SUCTION PIPING FOR ECCENTRIC REDUCER

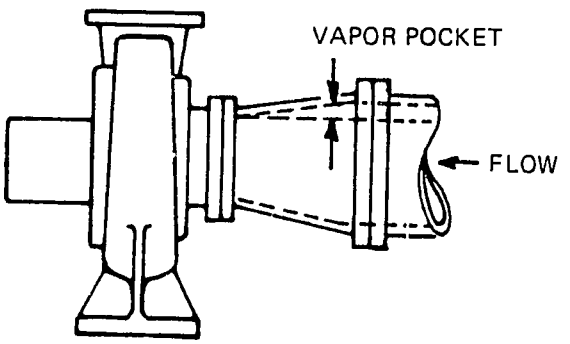

FIGURE 4
INCORRECT SUCTION PIPING FOR ECCENTRIC REDUCER

4. It is recommended that

F. DISCHARGE PIPING

1. On some installations, a check valve and balancing cock in addition to a gate valve may be required in the discharge piping. The check valve would be used to prevent liquid from running back through the pump in case of failure of the motor. The balancing cock is used to control the pumps' operating capacity by providing a changeable control in the piping system. The gate valve would be used in priming, starting and shutting down the pump.

2. When valves are required in the discharge line, they should be located as near as possible to the pump.

3. In some applications when the pump may be operated with zero flow, provisions should be made for recirculating a portion of the liquid from the discharge to the suction of the pump to reduce the possibility of overheating.

G. PIPING FOR SPARE PUMPS

Spare pumps in high temperature service should be piped so that hot liquid from the discharge of the operating pump circulates continuously through a by-pass to the spare pump and back to the suction of the operating pump. This can greatly reduce thermal shock when the spare pump is started.

H. INSTALLING PUMP

1. Make up the piping to the suction and discharge connections of the pump. All piping must be pro-

wrong direction on three phase current, change any two leads to the motor. You must disconnect the power before changing the wiring.

4. Lack of capacity and head may indicate the passageways of the pump impeller have become clogged with foreign matter or that the motor speed is low. If speed of the motor is low, the wiring connections at the motor should be checked for miswiring or looseness. If the pump is wired for 460 volt current, but is actually operating on 230 volt current, the motor will never come up to proper speed and may burn out. If low voltage occurs, notify local power company. Slugging of air is another cause of low capacity and head on a closed system. Be sure the system is properly vented of all air – See further notes under Trouble Shooting – Section IV.

WARNING - DO NOT ATTEMPT TO OPERATE PUMP WITH SUCTION VALVE CLOSED!

5. As soon as the pump is up to full speed, slowly open the discharge valve until it is completely open. Do not let the pump run with the discharge valve closed.

6. Check the pressure gages on each side of the strainer in the suction line. A pressure drop across the strainer

B. OPERATING AT REDUCED CAPACITY

If the pump is connected to a constant speed driver or motor, the capacity of the pump can be reduced by throttling the discharge. When throttling the discharge, a by-pass connection may be used to by-pass sufficient liquid back to the suction inlet to prevent overheating.

C. OPERATING ROUTINE

1. Check the bearing temperatures periodically. If there is overheating, check the motor to insure adequate lubrication. Normal inspection consists of periodic checks of motor lubrication.

2. Lubricating the pump motor should be done in accordance with manufacturer's recommendations.

3. Check all seals for leakage.

4. Check the suction and discharge pressure gages. If the differential pressure drops critically, shut down the pump at once.

D. STOPPING

The pump should be shut down rapidly to keep liquid in the pump and to prevent the parts from seizing. After

12. Lightly lubricate the O.D. of the stationary member of the new seal. With the seal seat towards the impeller, press the seal firmly into the head recess. Make sure that the seat is level and square.

NOTE: Extreme caution must be exercised not to scratch, gouge or otherwise mar the sealing surface of the mechanical seal or leakage will likely result.

13. Replace the slinger (9) on the shaft.

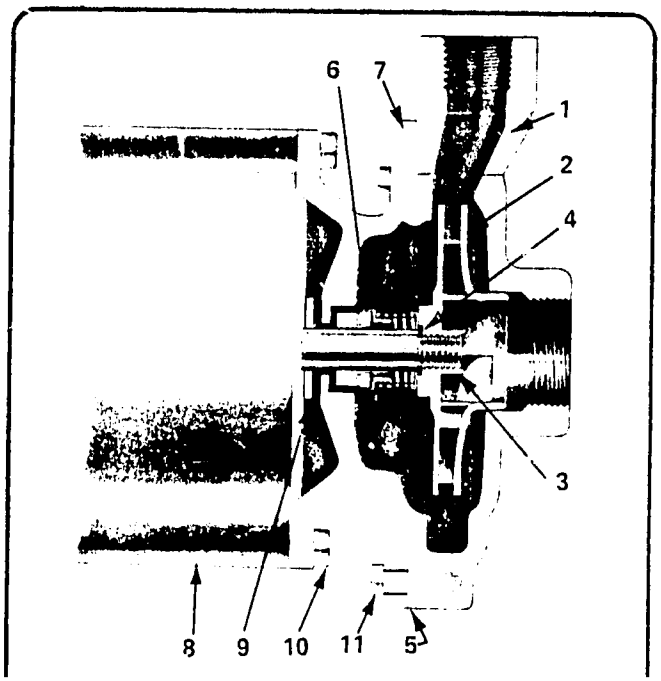

14. Mount the head (7) on the motor (8) by using four hex head cap screws (10).

15. To assemble mechanical seal rotating element (6) onto the shaft:

    a. Lightly lubricate the I.D. of new seal boot (6B) and slide it over shaft with the carbon seal face towards the stationary seal face until seal faces meet.

    b. Place spring (6C) on the rotating member (seal boot 6B) so it seats properly against the shoulder.

    c. Place spring retainer (6D) against the spring. Be sure the rolled edge faces toward the spring.

16. Replace the stop washer (4) and screw the impeller (2) onto the shaft while holding shaft stationary with screwdriver placed in motor shaft slot. The stop washer has a radius machined on one of the outer diameter edges. The washer is to be assembled with this edge against the impeller. Make sure impeller is snugged up tight. Use a screwdriver to pry the spring retainer (6D) away from the impeller (2) to be sure that the retainer isn't caught between the shaft shoulder and impeller.

17. Replace impeller nut (3), snug nut up tight.

18. Place the gasket (5) on the head (7) and assemble both to the case (1) using 8 hex head cap screws (11).

7. Remove slinger (10) and shield (12) from shaft.

8. Remove the mechanical seal stationary seat (7a) from the head (8).

9. Remove the gasket (6) from head (8) and clean gasket surfaces on both the case (1) and head (8).

10. Clean motor shaft with solvent.

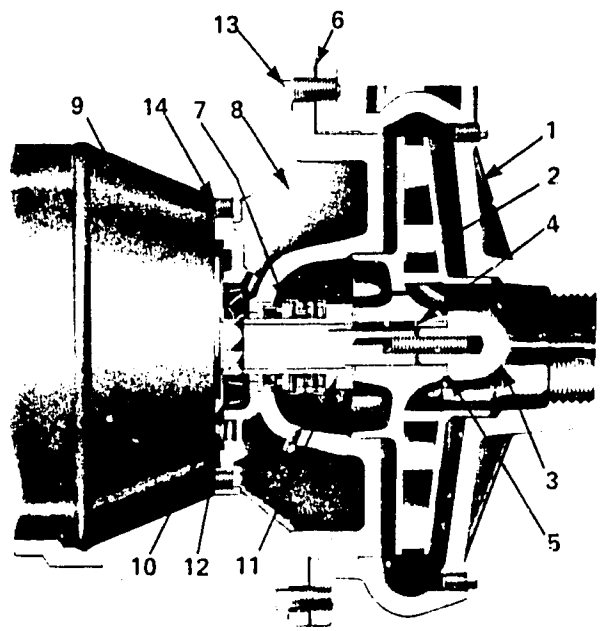

FIGURE 7
A9 PUMP

For Additional Information
On Seal (7)
Refer to Figure 8.

11. Lightly oil O.D. of new seal stationary seat (7A). With the sealing face towards impeller, press the seal seat firmly into the head recess, being sure the seat is level and square.

Caution: Extreme care must be exercised not to scratch, mar or gouge the sealing face of the stationary seal or leakage will occur.

12. Replace shield (12) and slinger (10) onto shaft.

13. Mount the head (8) to the motor (9) by using 4 hex head cap screws (14).

14. To assemble mechanical-seal-rotating element (7B, C & D) onto the sleeve (11):

    a. Slip spring retainer (7D) over sleeve (11) with the bent edge facing away from the shoulder.

    b. Place spring (7C) over sleeve.

    c. Lightly lubricate I.D. of new seal boot (7B) and slide it over the sleeve with the carbon seal face away from sleeve shoulder.

15. Place a light coat of Teflon paste on I.D. of sleeve and slide it over the shaft until seal faces butt together firmly and squarely.

16. Brush both sides of gasket (5) with Teflon paste and position it on the sleeve (11).

17. Insert key (4) in keyway and replace the impeller (2) on shaft.

18. Place a small amount of Teflon paste on flat side

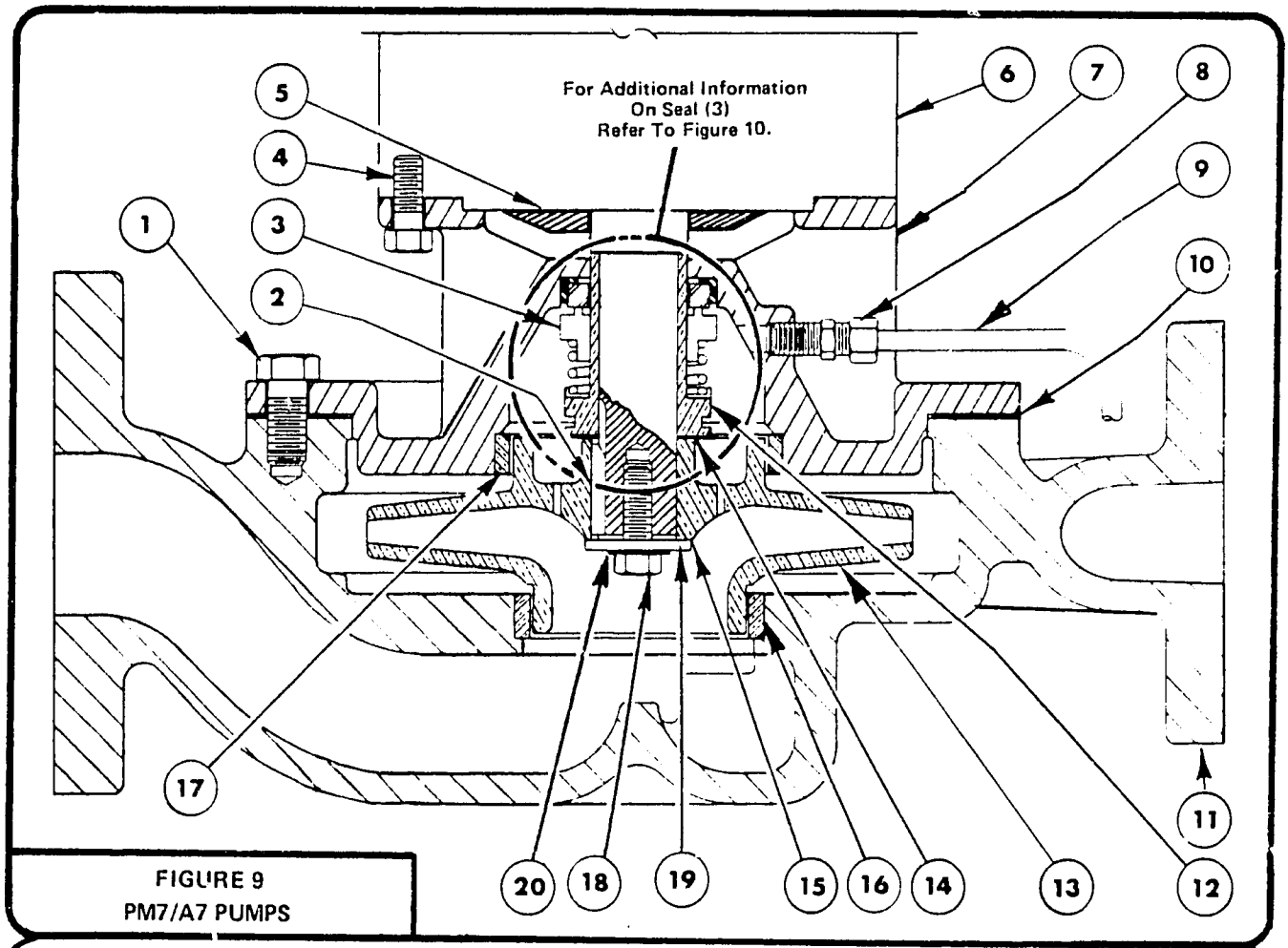

FIGURE 9
PM7/A7 PUMPS

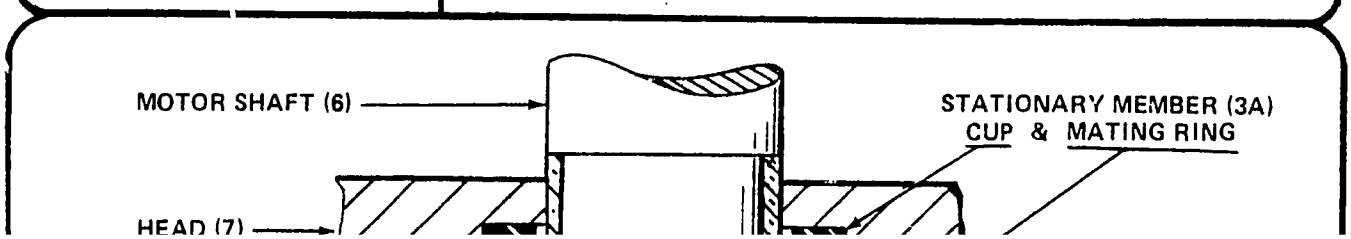

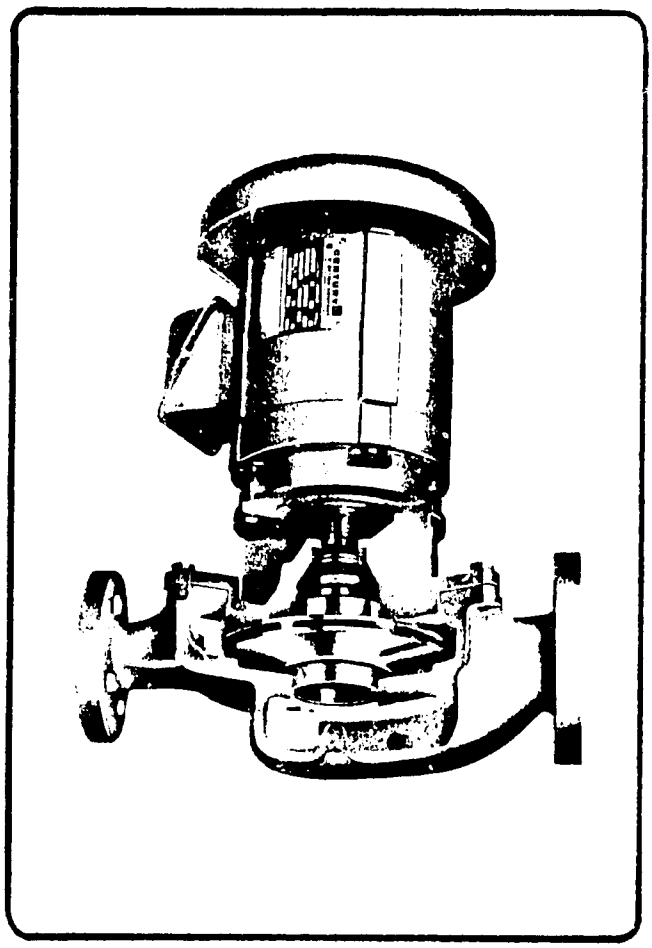

5. Remove the case gasket (10) and clean the gasket surfaces of both the head (7) and case (11).

6. Remove the impeller screw (18) by turning it counter clockwise and remove washers (19) and

14. Assemble the rotating seal elements onto the sleeve (12).

    a. Slip spring retainer (3D) over sleeve (12) with the bent edge facing away from the shoulder.

    b. Place spring (3C) over sleeve.

    c. Lightly lubricate I.D. of new seal boot (3B) and slide it over sleeve with the carbon seal face away from sleeve shoulder.

15. Place a light coat of Teflon paste on I.D. of the sleeve and slide it over the shaft until seal faces butt together firmly and squarely.

16. Brush both sides of gasket (14) with Teflon paste and position it on the sleeve (12).

17. Replace key (2) in keyway and slide impeller (13) onto shaft.

18. Brush both sides of gasket (15) with Teflon paste and place on impeller. Place the sealing washer (19) and washer (20) on the impeller cap screw (18) and tighten onto the shaft.

19. Place gasket (10) on head (7) and assemble it to the case (11) using 9 hex head cap screws (1).

20. Replace the seal flush piping (8 & 9).

21. Open the valves to the pump or refill system and check pump for leaks.

22, Reconnect power to pump and check again for leaks.

D. A7A/PM7A PUMP DISASSEMBLY AND ASSEMBLY (Ref. Fig. 11 & 12) WITH JET PUMP MOTOR

1. Disconnect power to pump

For Additional Information On Seal (2)
Refer To Figure 12.

FIGURE 11
A7A/PM7A PUMP WITH JET PUMP MOTOR

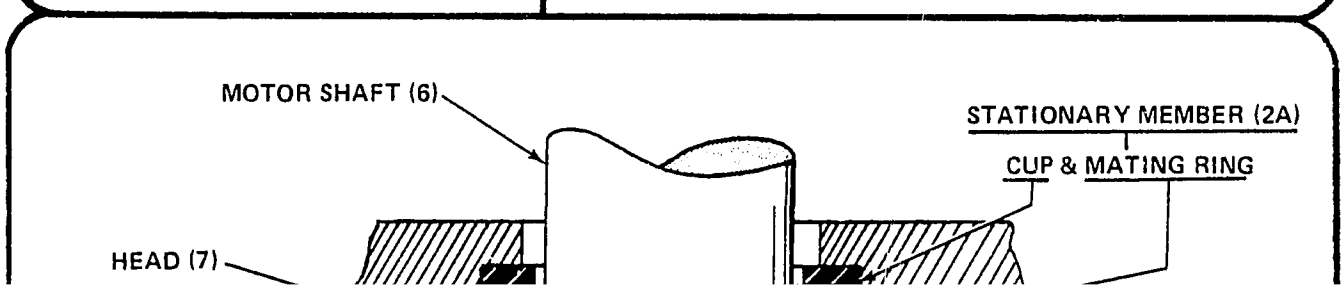

11. (Continued)

Caution: Extreme care must be exercised not to scratch, mar or gouge the face of the stationary seal as seal leakage will result.

12. Replace slinger (5) on the shaft and assemble the head (7) to the motor (6) by replacing the 4 retainer clips (3) on shank of cap screws (4). Tighten the cap screws.

13. Assemble rotating seal elements onto shaft.
    a. Lightly lubricate the I.D. of new seal boot (2B) and slide it over the shaft with the carbon seal face towards the stationary seal face.
    b. Place spring (2C) over shaft.

14. Replace impeller (12). Be sure the spring (2C) is seated properly against the impeller face.

15. Replace the impeller nut (15) and torque it to 15 lbs.

16. Place the gasket (10) on head (7) and assemble it to the case (11) using 8 hex head screws.

17. Replace the seal flush line (8 and 9).

18. Open valves to the pump and refill the system. Check the pump for leaks.

19. Reconnect power to pump and check again for leaks.

SECTION IV - TROUBLE SHOOTING

Operating troubles and their probable causes are as follows:

B. INSUFFICIENT PRESSURE (Continued)

5. Suction line not submerged enough.
6. Available NPSH not sufficient.
7. Pump not up to rated speed.
8. Mechanical defects:
    a. Impeller damaged.
    b. Internal leakage (clearances).

C. CAVITATION AND NOISE

1. Air or gas in liquid.
2. Suction line not filled with liquid.
3. Suction line not submerged enough.
4. Available NPSH not sufficient.

D. PUMP LOSES SUCTION AFTER STARTING

1. Suction line not full of liquid.
2. Air leaks in suction line.
3. Air or vapor in liquid.
4. Air or vapor in suction line.
5. Suction line not submerged enough.
6. Available NPSH not sufficient.

E. EXCESSIVE POWER CONSUMPTION

1. Speed too high
2. Insufficient head.
3. Mechanical Defects:
    a. Shaft bent.
    b. Rotating element dragging.
    c. Piping improperly supported.

NOMENCLATURE

10 HP - 2 1/2 - A9 - D 65 S - 2 - A

- **10 HP** — HORSEPOWER
- **2 1/2** — DISCHARGE (IN INCHES)
- **A9** — TYPE MODEL
- **D** — IMPELLER STYLE
- **65** — IMPELLER DIAMETER
  - **6** — INCHES (6")
  - **5** — EIGHTS OF AN INCH (5/8")
  - TOTAL — 6-5/8 INCHES
- **S** — STANDARD IMPELLER
- **2** — RPM: 1 - 1750; 2 - 3450
- **A** — SERIES

ORDERING PROCEDURE

1. Complete part number and description is required when ordering.
2. When a part number is not known or shown in the parts catalog, the complete model and serial number of the unit on which the part is to be used must be given.
3. Send all orders to:

   DUNHAM-BUSH, INC., PARTS DEPT.
   811 E. MAIN ST.
   MARSHALLTOWN, IOWA, 50158

4. Prices can be found in the latest revision of Form 17448 and are for one item or kit as applicable.
5. Minimum billing is $25.00.
6. All prices are subject to federal, state, local or other taxes which may be applicable.
7. All orders requiring special handling will have a sur-

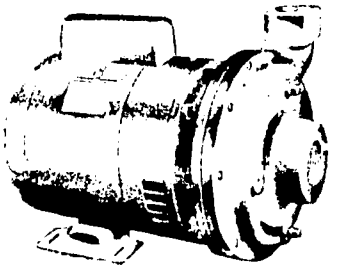

TYPE A5 PUMP

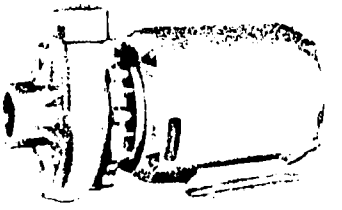

TYPE A9 PUMP

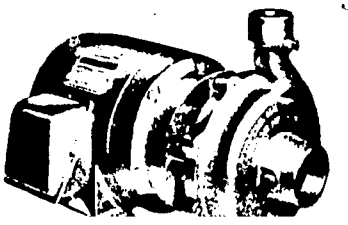

TYPE A7A AND A7 PUMPS

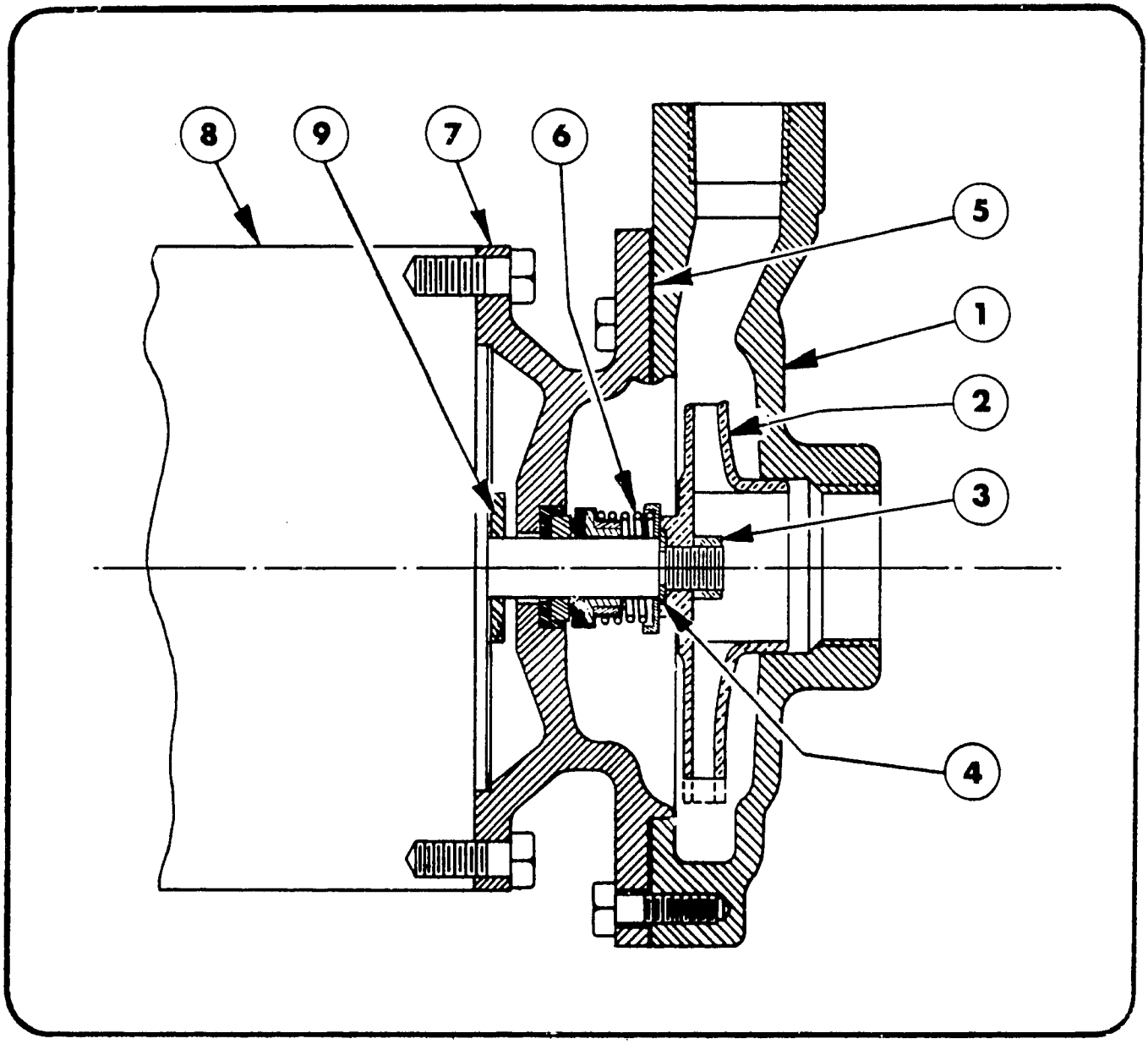

A5 PUMP AND PARTS LIST

⅓ HP, ½ HP AND ¾ HP

PART NUMBER AND DESCRIPTION	1/3 HP 1" 1φ & 3φ A5C2	1/3 HP 1 1/2" 1φ & 3φ A5C2	1/2 HP 1" 1φ & 3φ A5C2	1/2 HP 1 1/2" 1φ & 3φ A5C2	3/4 HP 3/4" 1φ & 3φ A5C2	3/4 HP 1 1/2" 1φ & 3φ A5C2

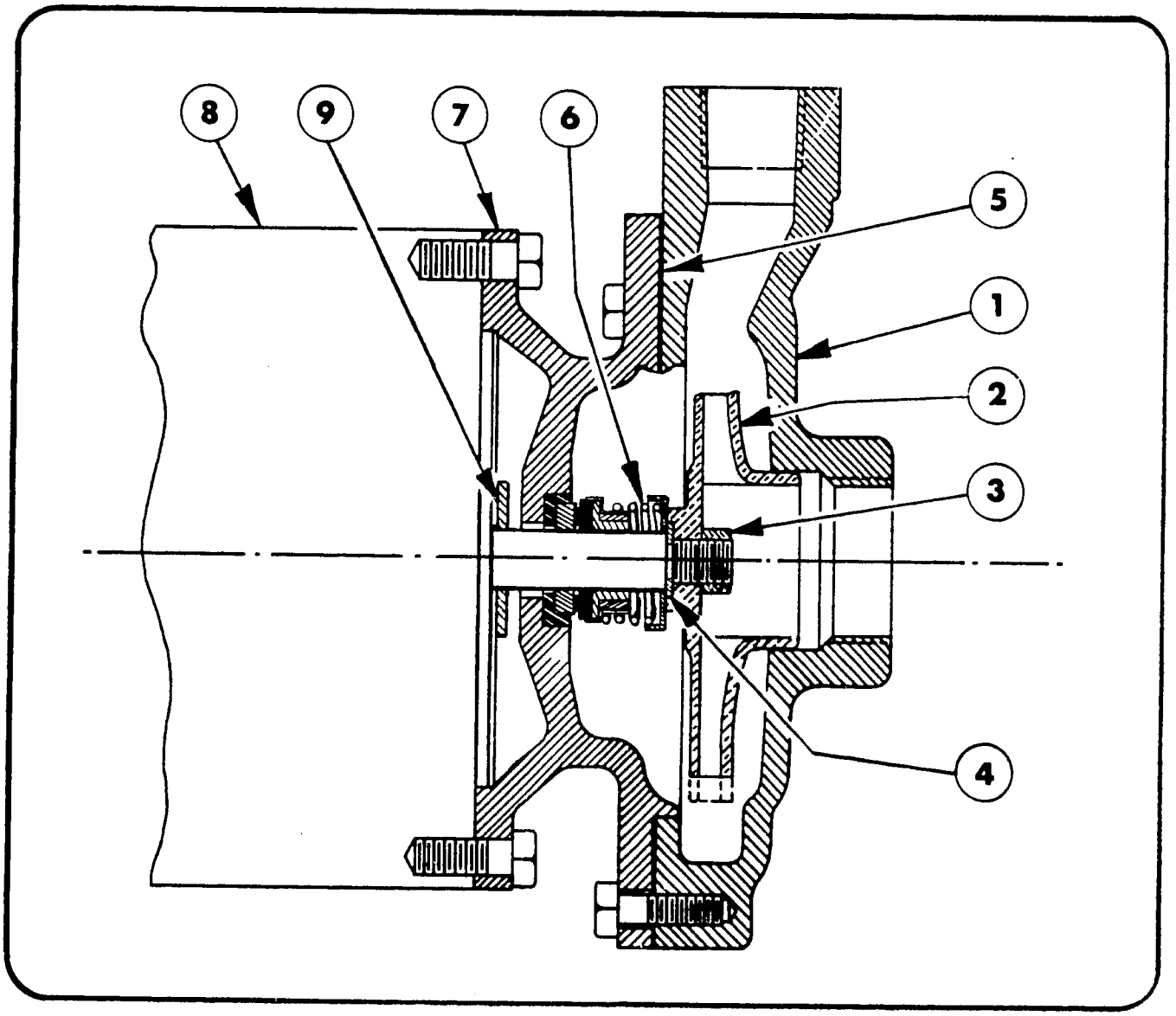

A5 PUMP AND PARTS LIST

1 HP, 1½ HP AND 2 HP

PART NUMBER AND DESCRIPTION	1 HP ¾" 1φ & 3φ	1 HP 1½" 1φ & 3φ	1½ HP ¾" 1φ & 3φ	1½ HP 1¼" 1φ & 3φ	2 HP 1" 1φ & 3φ	2 HP 1¼" 1φ & 3φ	2 HP 1½" 1φ & 3φ