UNITED STATES INTERNATIONAL DEVELOPMENT COOPERATION AGENCY
AGENCY FOR INTERNATIONAL DEVELOPMENT
Washington, D. C. 20523

JAMAICA

PROJECT PAPER

AGRICULTURAL MARKETING DEVELOPMENT II

AMENDMENT

AID/LAC/P-065/1

Project Number:532-0060
Loan Number:532-T-013A

AGENCY FOR INTERNATIONAL DEVELOPMENT

PROJECT DATA SHEET

1. TRANSACTION CODE: C (A = Add, C = Change, D = Delete)

Amendment Number: - 1 -

DOCUMENT CODE: 3

2. COUNTRY/ENTITY: JAMAICA

3. PROJECT NUMBER: 532-0060

4. BUREAU/OFFICE: LAC 05

5. PROJECT TITLE (maximum 40 characters): Agricultural Marketing Development II

6. PROJECT ASSISTANCE COMPLETION DATE (PACD): MM 12 DD 31 YY 86

7. ESTIMATED DATE OF OBLIGATION (Under 'B.' below, enter 1, 2, 3, or 4)

A. Initial FY 82 B. Quarter C. Final FY 86

8. COSTS ($000 OR EQUIVALENT $1 =)

A. FUNDING SOURCE	FIRST FY 82 B. FX	C. L/C	D. Total	LIFE OF PROJECT E. FX	F. L/C	G. Total
AID Appropriated Total	720	-	720	9,100	-	9,100
(Grant)	(-)	(-)	(-)	(-)	(-)	(-
(Loan)	(720)	(-)	(-)	(9,100)	(-)	(9,100
Other U.S. 1. Prior Phase I		-	-	4,700	-	4,700
Other U.S. 2.		-	-	-	-	-
Host Country		425	425	-	12,400	12,400
Other Donor(s) Prior Phase I		-	-	-	3,426	3,426
TOTALS	720	425	1,145	13,800	15,826	29,626

9. SCHEDULE OF AID FUNDING ($000)

A. APPROPRIATION	B. PRIMARY PURPOSE CODE	C. PRIMARY TECH. CODE 1. Grant	2. Loan	D. OBLIGATIONS TO DATE 1. Grant	2. Loan	E. AMOUNT APPROVED THIS ACTION 1. Grant	2. Loan	F. LIFE OF PROJECT 1. Grant	2. Loan
(1) FN	130	-	140	-	4,700	-	9,100	-	13,800
(2)									
(3)									
(4)									
TOTALS				-	4,700	-	9,100	-	13,800

10. SECONDARY TECHNICAL CODES (maximum 6 codes of 3 positions each)

11. SECONDARY PURPOSE CO

12. SPECIAL CONCERNS CODES (maximum 7 codes of 4 positions each)

A. Code

B. Amount

13. PROJECT PURPOSE (maximum 480 characters)

To initiate the development and application of improved marketing practices for small farmers' food crops and meat and fish products for domestic and export markets by upgrading the present marketing system and facilitating the private sector's role in two phases of implementation.

14. SCHEDULED EVALUATIONS

Interim MM 11 YY 83 MM YY Final MM 02 YY 87

15. SOURCE/ORIGIN OF GOODS AND SERVICES

[x] 000 [x] 941 [x] Local [ ] Other (Specify)

16. AMENDMENTS/NATURE OF CHANGE PROPOSED (This is page 1 of a 92 page PP Amendment.)

This amendment increases the development loan assistance by $9.1 million as the intended 2nd phase of the original $30 million proposal which was presented and reviewed in 1978. Due to a shortage of funds at that time and the need for additional data for Phase 2, $4.7 million was authorized in December 1980 for Phase 1 of AID's projected participation. This amendment presents the requested analyses for the Phase 2 construction required to complete the project.

17. APPROVED BY

Signature: /s/ Glenn O. Patterson

Title: Director, USAID/Jamaica

Date Signed: MM 11 DD 27 YY 81

18. DATE DOCUMENT RECEIVED IN AID/W, OR FOR AID/W DOCUMENTS, DATE OF DISTRIBUTI

MM 11 DD 30 YY 81

AID 1330-4 (8-79)

BEST AVAILABLE COPY

BEST AVAILABLE COPY

UNITED STATES INTERNATIONAL DEVELOPMENT COOPERATION AGENCY
AGENCY FOR INTERNATIONAL DEVELOPMENT
WASHINGTON D C 20523

PROJECT AUTHORIZATION
(Amendment No. 1)

Name of Country: Jamaica

Name of Project: Agricultural Marketing Development

Number of Project: 532-0060

Number of Loan: 532-T-013

1. Pursuant to Section 103 of the Foreign Assistance Act of 1961, as amended, I hereby amend the Project Authorization dated December 3, 1980, for the above Project as follows:

a. In paragraph 1, delete "Four Million Seven Hundred Thousand United States Dollars ($4,700,000)" and substitute "Thirteen Million Eight Hundred Thousand ($13,800,000)".

b. In paragraph 2, insert "and the construction of four Sub-Terminal Wholesale Distribution Markets and twenty-five Assembly and Grading Stations" after the words "(the "MOA")."

c. In paragraph 3(a), add "With respect to additional Loan funds made available pursuant to amendment of this authorization, the date of first disbursement shall be deemed to be the date of first disbursement of such additional Loan funds."

d. After paragraph 3.d. insert:

"e. Condition Precedent to Disbursement for Construction of Sub-Terminal Wholesale Distribution Markets

Prior to any disbursement, or the issuance of any commitment documents under the Project Agreement, for construction of each Sub-Terminal Wholesale Distribution Market, the Borrower shall, except as A.I.D. may otherwise agree in writing, furnish to A.I.D., in form and substance satisfactory to A.I.D., (i) evidence that the Borrower holds clear title to the site and that there are letters of intent from prospective wholesalers for the lease of at least 50% of the rentable market space; and (ii) a statement of the number of prospective leases involved and the terms and conditions of the leases.

f. Condition Precedent to Disbursement for Construction of Assembly and Grading Stations

Prior to any disbursement, or the issuance of any commitment documents under the Project Agreement, for construction of

each Assembly and Grading Station, the Borrower shall, except as A.I.D. may otherwise agree in writing, furnish to A.I.D., in form and substance satisfactory to A.I.D., evidence (i) that a survey has been conducted which demonstrates the social, financial and economic feasibility of the enterprise; and (ii) that a formally established farmers group or producers association has been constituted to operate the facility under purchase or lease; and (iii) that the Borrower or the operating organization holds clear title to the site."

e. Redesignate paragraph "e." as "g." and add:

(8) Place proceeds from the sale of project-funded equipment to tenants at the Wholesale Distribution Markets into a special fund and use this fund in support of project objectives as approved in writing by A.I.D."

2. All other terms and conditions of the Project Authorization remain unchanged.

Acting Assistant Administrator
Bureau for Latin America
and the Caribbean

1 Feb 1982
Date

Clearances:

LAC/CAR:RDelaney (draft) date 1/28/82
LAC/DR:ILevy: date 1/29/82

GC/LAC:BVeret:ckg:1/11/81:x23272

TABLE OF CONTENTS

Agricultural Marketing Development

Phase II Addendum

		PAGE
	Face Sheet (Revised)	
I.	Summary and Recommendation	
	A. General Background	1
	B. The Problem	1
	C. Summary Project Description	2
	D. Financial Summary	4
	E. Recommendation	5
	F. Summary Findings	5
	G. Project Development Committee	6
II.	Background of the Project and Problem	
	A. Physical Environment	7
	B. Political/Economic Environment	7
	C. Jamaica's Agricultural and Marketing System and Target Groups	
	1. The Small Farmer	9
	2. Small Marketing Intermediaries and the AMC	10
	3. Small Farmer/Producer Organization	12
	4. Supermarkets and Parish Markets	13
	5. Consumers	13
	6. Problems and Constraints	15
	7. Rationale and Strategy	17
	D. AID and other Related Donor Assistance	23
III.	Detailed Project Description	
	A. Phase I and Progress to Date	25
	B. Phase II	
	1. Goal and Purpose	26
	2. AGS	27
	3. SWDM	37
	4. Beneficiaries	44
	5. Project Risks and Design Responses	44
IV.	Project Analyses	
	A. Engineering Analysis	
	1. Estimated Construction Costs	49
	2. Design and Supervision	49
	3. Engineering Criteria and Specifications	50
	4. Site Selections	52
	5. Contracting Procedures	53
	6. Equipment and Commodities	53
	7. Construction	53
	8. Local Construction Contractors	54

TABLE OF CONTENTS
(continued)

IV. B. Economic Analysis
1. Introduction 54
2. The Project 54
3. Project Benefits 54
4. Project Costs 56
5. Benefit/Cost Analysis 56
6. Sensitivity Analysis 59
C. Financial Analysis and Plan
1. Ability of GOJ to Meet Recurrent Costs 60
2. Financial Viability of SWDM 67
3. Financial Viability of AGS 71
4. Financial Plan 72
D. Social Soundness Analysis 75
E. Administrative Analysis
1. GOJ 84
2. USAID Capacity 85
3. Conclusions 86

V. Implementation Planning
A. AGS Facilities 87
B. SWDM Facilities 88
C. Evaluation Plan 89
D. Conditions Precedent and Covenants 91

ANNEXES:
A. Logical Framework 93
B. Statutory Check List 96
C. 611 (e) Certification 101
D. DAEC Approval Cable - Phase I 102
E. Draft Authorization 104
F. AGS Commodities and Equipment List 106
G. SWDM Commodities and Equipment List 109
H. List of Potential AGS Sites 112
I. Economic Sensitivity Analysis 113

I. SUMMARY FINDINGS AND RECOMMENDATION

A. General Background

Jamaica enjoys a favorable and pivotal geo-economic location in the center of the West Indies' Caribbean Sea, 600 miles south of Miami, Florida, 90 miles south of Cuba and 600 miles northeast of the Panama Canal. It is relatively well endowed with bauxite, excellent year-round warm weather, white sand beaches and a highly literate and talented population of 2.2 million, with long agricultural and strong Democratic traditions.

After experiencing rapid economic growth in all 3 of its major industries during the 1960s and early 1970s, a combination of ambitious but expensive social programs, escalating energy prices, a worldwide recession and unrealized export and revenue expansion plans caused an extreme scarcity of foreign exchange resulting in an unprecidented world record of seven consecutive years of national negative growth. Balance of payment pressures worsened, the GNP declined and per capita income dropped 2% per year in real terms since 1970, resulting in emigration of skilled human resources, annual inflation rates as high as 49% and unemployment as high as 35 to 40%. The economic decline was rapid and steady and continued from 1974 through 1980, when, what virtually all observers believe to have been, one of the most important elections in the nation's history took place.

The new government that emerged from that 30 October 1980 election has stated that its recovery development strategy must stimulate the country's private productive sectors, principally agriculture, tourism, manufacturing and mining. Emphasis is to be placed on maximizing foreign exchange earnings and cutting import bills, particularly for food and energy.

B. The Problem

1. The Agricultural Sector

Including the bauxite and tourism industries, the agricultural sector is one of Jamaica's 3 major industries and is characterized by 60-63% of the population, 28-30% of the labor force, but only 8-10% of the GDP and an average annual per capita production growth rate of minus 2%. Of the 2.7 million acres of the rugged and hilly 51 by 146 mile island, 50% is arable. Fifty percent is over 1000 ft. above sea level, and forty sq. miles are over 5000 ft. above sea level. Almost 2/3 of the tillable land is sloping to some degree, creating considerable erosion problems in most areas, especially during the frequent heavy tropical rains.

With 91% of the nation's 194,000 farms being only 10 acres or less, the GOJ and AID have agreed that their cooperative development and assistance strategy will be best directed towards impacting on the largest number of the poorest citizens which would be these 153,000 small farmers and their 20,000 small retail and wholesale marketing intermediaries, sometimes called "Higglers". The principal thrust of AID's current Development Assistance strategy to Jamaica is directed at the basic constraints to long-range development of increased production and income with particular sensitivity to impact on the rural poor, who have been especially vulnerable to the negative economic conditions. See p.43, FY 82 CDSS.

2. Constraints on Small Farmer Development

Several recent studies by the GOJ, AID and other international donors have identified the following constraints on improving the quality of life of the Jamaican small farmers:

-periodic hurricanes, tropical storms, flooding and erosion
-land fragmentation and lack of erosion preventive practices
-inadequate marketing and distribution system
-high crop production costs and disproportionately low farmgate prices
-inadequate extension and marketing information diffusion
-limited credit and financial inputs

The combined effect of these constraints results in specific needs that this project will address.

Presently, the small farmers plant and harvest from 75 to 80% of the country's domestic food crops without the benefits of:

-advanced agricultural technology through extension services
-accurate marketing information as to current and distant product demand and prices
-sufficient and cheap farm input factors
-adequate means to dispose of larger harvest quanties, at higher farmgate prices and still avoid high post harvest losses through mishandling and spoilage.

They plant those crops that brought the highest prices at their last harvest. They harvest only those small quantities that can be readily carried away by individual middle-men traders, usually farm wives or women who act as small retailers, wholesalers and transporters. They accept farmgate prices, frequently 1/3 or more of the consumer prices, dictated by the middle-man/traders' capacities and abilities to profitably dispose of only that which she accepts from the farmer. Most produce is thus shipped in small quantities to the single terminal wholesale market in Kingston, only to be trans-shipped back across the island to areas where the various consumers have created a demand. Post harvest losses through unharvested, mishandled and spoiled products is estimated as high as 40% each year.

The resulting social problems are also negative. Low farm income is a disincentive not only to increased incomes and production but also to young future farmers remaining on the farms and not migrating to the overcrowded cities and increasing the unemployment figures. Despite these constraints which can be addressed, indications are that the agricultural sector has great potential for improved performance and greater contribution to the country's needed development, in both economic and social terms.

C. Summary Project Description

The goal of the Project is to improve the well being of small farmers, small marketing intermediaries and farm product consumers. The Project purpose is to improve the agricultural marketing system practices for domestic production of food crops, meat and fish.

The Project has been initiated in two phases. To address such marketing problems as standardized grading of produce, facilitating credits for farmer organizations, developing and diffusing marketing information and increasing farming technology - Phase I was authorized the first quarter in FY 1980 for a $4.7 million loan.

Phase I consists of four components; 1) The creation and staffing of a Marketing and Credit Division in and by the Ministry of Agriculture, 2) The provision of a large technical assistance element to support the new division, 3) A large participant training element for the division's staff and selected small farmers and marketing intermediaries, and 4) commodity procurement. The Marketing and Credit Division (MACD) is the catalyst for upgrading the marketing system in general and for improving the specific capabilities and practices of the small farmers and the small marketing intermediaries. It will undertake market and marketing development through research, market news and information, support of farmer/producer organizations, marketing extension and quality assurance (grades and standards, inspection, market regulation, etc.). Considerable progress has now been achieved implementing Phase I.

The proposed Project is to now initiate Phase II or the next step in achieving the Project's goal and purpose. Phase II will consist of two components - 1) The support of 25 small farmer/producer organizations and construction of their Assembly and Grading Stations (25 through-out the island) and 2) the construction of 4 Subterminal Wholesale Distribution Markets (SWDM). These two components are designed to benefit directly from and function with the four conponents of Phase I to address the problems of larger take-offs from the small farmers, facilitate volume assembly and grading at the producer level and better island-wide wholesale distribution of domestic crops, meat and fish. The intended results will be less post harvest losses, higher farmgate prices, more accessible factor inputs at reduced costs and lower consumer prices for higher quality produce.

The 25 farmer/producer organizations will operate their respective Assembly and Grading Stations (AGS) in their local areas in simply constructed and basically equipped facilities to grade and package their harvests into identifiable grades, facilitate the onward shipment to differentiated markets, reduce the costs of and widen the choices of commodities to marketing intermediaries through economies of scale and provide an efficient means of distributing factor inputs to farmer/producers and at lower costs.

The 4 SWDM will be constructed and equipped under the proposed loan and operated by limited liability companies, established with the GOJ as the principal stockholder, under the aegis of the Marketing and Credit Division of the MOA. They will have the capabilities to collect and distribute large volumes of graded and packaged produce to areas and consumers of greatest demand and price, minimizing excessive handling, spoilage and losses. Phase II is estimated to cost a total of $21.5 million over its 5 year life. The GOJ will contribute $12.4 million and AID will loan the GOJ $9.1 million.

The extended and strengthened Marketing Division will assist in improving post harvest technology, farmer/producer support and product distribution. It will also assist in market development, the provision of market news and information, market research, marketing training and extension, and quality assurance.

These basic interventions will make it possible for the presently inefficient marketing system to perform some necessary functions not now being carried out, as well as improve the performance of some functions now undertaken poorly and at high cost.

D. Financial Summary

The total cost of Phase I of the Project was estimated at $8,154,000. AID provided $4,700,000 in a loan fund; the GOJ $3,426,000.

Table 1a
Budget Summary - Phase I
Loan No. 532-T-013
(US$000)

	AID	GOJ	TOTAL
Technical Assistance	3,166	---	3,166
Participant Training	492	100	592
Commodities	126	---	126
Net Operating Expenses	---	2,537	2,537
Contingency and Inflation	916	817	1,733
TOTAL	4,700	3,454	8,154

The estimated cost of Phase II of the Project is $21,500,000. AID will provide $9,100,000 (42.11%) in loan funds; GOJ, $12,400,000.

Table 1b
Budget Summary - Phase II
($US Rounded)

	AID	GOJ	TOTAL
Construction, Land Acquisition and Site Development			
- AGS:	1,040,100	1,457,400	2,497,500
- SWDM:	2,781,000	4,271,000	7,052,000
	3,821,100	5,728,400	9,549,500
Equipment			
- AGS:	1,058,300	---	1,058,300
- SWDM (including reefer trucks)	2,042,200	---	2,042,200
	3,100,500	---	3,100,500
Net Operating Cost			
- AGS:	---	1,915,000	1,915,000
- SWDM:	---	687,000	687,000
	---	2,602,000	2,602,000
A & E Design & Supervision			
- AGS:	---	92,300	92,300
- SWDM:	---	262,700	262,700
	---	355,000	355,000
Total Base Costs	6,921,600	8,685,200	15,606,800
Contingency @5%	346,100	434,300	780,400
* Inflation	1,811,600	3,089,700	4,901,300
	9,079,300	12,209,200	21,288,500
Total Project Costs(Rounded)	9,100,000	12,400,000	21,500,000
	42.11%	57.89%	100%

* @15% on off-shore materials needing Foreign Exchange and@17% on all local currency, materials and services.

E. Recommendation

Phase I of this Project is now one-year along in it's implementation. The proposed Phase II supplement is now due for incorporation into the Project for maximum coordinated effectiveness.

USAID/Jamaica recommends approval for a supplemental loan of $9.1 million to complete the Agricultural Marketing Development Project started one year ago. The proposed supplemental loan will be to the same Borrower on similar concessionary terms as for Phase I: Twenty (20) years, with a ten (10) year grace period, with interest of two (2) percent during the grace period and three (3) percent thereafter.

The Borrower will be the Ministry of Finance on behalf of the Government of Jamaica (GOJ). The primary executing agency will be the Ministry of Agriculture (MOA). The Ministry of Agriculture is responsible, inter alia, for the development and implementation of the GOJ's agricultural marketing policy, strategy and programs. The Government of Jamaica concurs in the recommended supplemental loan for Phase II.

F. Summary Findings

1. Jamaica's archaic marketing system results in a situation where small farmer/producers are unable to sell all of the output of their farms, creates substantial post harvest losses, creates a bottle-neck to total country-wide distribution and acts as a disincentive to increasing agricultural production. As a result, incomes of small farmers and market intermediaries are depressed, consumer's purchasing power is reduced, and the nutritional status of critical consumer groups is adversely affected. Food imports are unnecessarily high and agricultural exports are restrained, impacting negatively on an already grave foreign exchange situation.

2. The GOJ has established agriculture as a high priority development sector and has recognized the improvement of marketing as a prerequisite to production increases. It has adopted an explicit marketing policy and strategy and has launched a comprehensive, integrated set of marketing activities. Total investment in these and related programs over the next five years will be approximately $50,000,000, financed by the GOJ and several donors, including the World Bank and the IDB.

3. This Project was designed jointly by the Ministry of Agriculture and USAID/Jamaica, expressly to carry out the GOJ's marketing policy, strategy and proposed activities, and to complement and support the GOJ's other marketing interventions. This Project also represents a key component of USAID/Jamaica's development strategy in agriculture. It reinforces, and in turn is reinforced by, other existing and planned USAID/Jamaica projects.

4. This Project and it's addendum builds upon the existing marketing system. It provides incentives and direct assistance to participants in the marketing system to improve their performances. The project facilitates the role of the private sector in the marketing system. Even with highly conservative assumptions, major benefits to income, production and foreign exchange are expected. The Project is judged to be feasible, consistent with AID legislation and policy, and with Presidential and Congressional exhortations, as well as in accord with applicable statutory criteria.

G. Project Development Committee

USAID/Jamaica

CAP: Arthur V. Patrick
Design Coordinator

ARDO: Richard Mangrich

CONT: Gerrado Berrios

PROG: Larry Bailey

AID/W

Fortunato Maiolo, DS/ST
Norman Chapin, LAC/DR
Robert Maushammer, LAC/DR
Debra DeWitt, LAC/DR

Ministry of Agriculture

Fred Zenny, Director
Marketing and Credit Division
Vivian Goodin, Chief
Market Development Division

Technical Assistance

Gene Miller, PASA/USDA, Team Leader
Thomas Bennett, PASA/USDA, Phase I Design Coordinator
Robert Heffernan, PASA/USDA
Carleen Gardner, Sociologist

II. BACKGROUND OF THE PROJECT

A. Physical Environment

Jamaica is the 3rd largest of the 4 islands of the Greater Antilles that include Cuba, Hispaniola and Puerto Rico, and a significant agricultural developing country. It is centrally located in the Caribbean Sea, on the direct trade routes between North and South America and between Europe and the Panama Canal. It is 146 miles east to west and 51 miles north to south having 2.7 million acres of which a little less than 50% is ariable. It has rugged terrain with many verdant hills and valleys comprising three major geographic regions: Interior mountain ranges, dissected limestone plateaus and hills and the coastal plains and interior valleys. The topgraphy is mostly sloping and is a limiting feature to land use and determines the type of agriculture that can be practiced and has influenced land tenure patterns.

Jamaica's climate is pleasantly tropical with a year-round warm climate. The island lies within the sub-tropical high pressure and the equitorial low pressure belts of the Atlantic and enjoys the regular north-east Trade Winds, which, blowing against the 7000 ft. Blue Mountains in the east, creates wide scale variations in rainfall. The highest annual rainfall is in the Blue Mountains at over 300 in. per year. The capital city of Kingston on the south coast averages 35 in. and the island average is 77 in. A large part of the best agricultural lands receives less than 70 inches a year, but high temperatures and other factors cause high moisture loss through evaporation and evapo-transpiration from vegetation (55% est.). Thirty-seven percent runs off into the sea hence the lack of moisture is a serious agricultural restraint requiring need for wide scale irrigation systems, soil erosion and water conservation practices on 2/3 of island's sloping land to decrease run off and encourage percolation.

The south central and north central coastal plains and interior valleys have the best soil (alluvial), topography and rainfall resulting in these areas being historically the most important and productive agriculture areas (south St. Eliz., Manchester, Clarendon and St. Catherine; St. Ann and Trelawny; St. Thomas-in-the-Vale, Nassau Valley and Queen of Spain's Valley). The island is divided into 14 parishes, each with its own council. These councils are under the auspices of the Ministry of Local Government. The Ministry of Agriculture services rural areas through four regional offices and 14 land authority offices. Agricultural extension and other programs are administered by Regional Directors responsible to the Ministry headquartered in Kingston.

B. Political/Economic Environment

The Jamaican economy, which enjoyed rapid and sustained growth during the 1960s and early 1970s, experienced its seventh consecutive year of decline in 1980. According to the U.S. Embassy's preliminary estimate, gross domestic product (GDP) fell last year 3.5 per cent from the previous year's total. While official income and product data have yet to be released by the Jamaican government, preliminary indications suggest that, of the economy's major sectors, only bauxite/alumina experienced real growth. The economy's continued poor performance through 1980 was due, as in immediately previous years, to severe shortages of imported raw materials and other inputs for manufacturing and agriculture due to the

scarcity of foreign exchange. Economic activity in 1980 was further hampered by an election campaign attended by political violence, labor union unrest, and resulting entrepreneurial unwillingness to push new endeavors until the outcome of the national elections in October, when the economic policies of the new administration, would be known.

As a result of the continued economic decline, and the ballooning growth of the labor force due to demographic factors, Jamaica's unemployment rate continued to climb. It reached an estimated 33 per cent in October 1980, and continued to increase until seasonal employment in agriculture picked up in January 1981. We estimate that the average rate for 1980 to have been about 31 per cent. The nation's inflation rate, after falling sharply to 20 per cent in 1979 from a record 49 per cent in 1978, climbed once again in 1980, to about 28 per cent. As noted above, the scarcity of foreign exchange has been a principal cause of economic deterioration in Jamaica.

Agricultural output, which normally accounts for 9 to 10 per cent of Jamaica's GDP, declined for the second straight year in 1980, as shortages of imported inputs and adverse weather conditions combined to reduce production 4 per cent from its 1979 level. Both food and export crops suffered. Losses in export agriculture, however, were particularly heavy, as severe declines in sugar and banana production and exports were only partially offset by increases in coffee, citrus, tobacco, and spice crops. Altogether, export earnings from agriculture in 1980 appear to have declined 6 to 8 per cent from 1979's level of $105 million.

For 1981, a modest recovery is expected, based primarily upon the greater availability of foreign exchange for imported inputs. It is projected that real agricultural outputs will increase 4 to 6 per cent, with export earnings increasing somewhat more, due to price increases. Sugar production should increase marginally to 265,000 metric tons from 1980's 251,000 metric tons. Similarly, banana exports should recover from the ravages of Hurricane Allen, rising to 45 to 50 thousand metric tons from 1980's all time low of 33 thousand metric tons. As for other crops, coffee and citrus production should decline by 40 to 20 per cent respectively, primarily as a result of cyclic factors, while tobacco, spice and food crops should show moderate increases.

Agriculture in Jamaica is a leading employer, involving 260,000 people or approximately 30% of the employed labor force. The Agricultural sector produces for both export and local consumption. Traditional agricultural export crops include sugar, coconut, banana, coffee, tobacco, cocoa, pimento and citrus. It is generally characterized by large scale operations involving less than 9% of the farms. Marketing for export crops is chiefly handled by commodity boards employing relatively modern marketing techniques. Crops grown for domestic consumption are produced mainly on small farms of between one and ten acres. These products are mostly fruits, vegetables, various root crops and pulses. However, small farmers produce a large percentage of certain export crops such as coffee, cocoa, bananas and pimento; for these products, farmers are tied into the various commodity boards for selling. For the marketing of domestic crops, the farmer relies on the small intermediaries, larger wholesale intermediaries and to some extent in the past the Agricultural Marketing Corporation (AMC) which will be described in greater detail below.

There has been a continuous decrease in the area of land used for farming. Of the total island area of 2.7 million acres, 1,489,199 acres were included in farm lands in 1968; this had decreased 20 percent to 1,180,203 acres in 1980. (During the same time rural to urban migration has been continuing; over 45% of the Jamaican population now resides in urban areas.) The importance of agricultural exports as a group has been decreasing. Sugar, which accounted for 20.2 percent of total exports in the boom year of 1975, currently contributes only 5.8 percent of exports. However, in spite of decreased land in agricultural production, domestic crop production has been increasing. Overall, Jamaica has the potential to increase small farmer production substantially.

C. Jamaica's Agricultural and Marketing System

1. The Small Farmer

The Jamaican small farmer is the main producer of domestic food crops. Small farmers occupy the central hilly upland areas and plateaus which are characterized by high to moderate soil erosion and lower coastal areas, e.g. South St. Elizabeth Parish. The vast majority of these farms are between one and ten acres. About 68% of farms of one to five acres are operator-owned, as are 79% of farms of five to ten acres. This represents 91% of all farmers and occupy 25% of farm acreage.

The Jamaican small farmer is not a subsistence farmer. He is tied into the commercial agricultural system, producing for both the market and his family's needs. However, he has been characterized as cautious about abandoning traditional agricultural practices when he has been and may again be confronted with poor weather conditions, erratic prices, and insufficient credit and inputs. The small farmer usually employs mixed farming practices, growing a wide variety of crops for personal consumption and as a hedge against uncertain market demand for specialized crop production. Small farmers have only limited exposure to and make little use of marketing information in deciding which crops to plant. Many small farmers cultivate several plots which are some distance apart, making it more difficult to sell and transport their produce. While virtually all people live within a quarter to a half mile from roads, agriculture holding can exist 2-3 miles from a road. This distance for human or animal portage in rugged uplands is a considerable obstacle.

Farming is done mostly with ill-suited handtools rather than with mechanized equipment. Although farmers have some knowledge of agricultural chemicals, seeds and other inputs, their use of them is limited. To a large extent this is the result of unavailability of these inputs to the small farmer. Farmer knowledge of correct applications and timing is limited.

Small farmers have limited capacity for on-farm storage. To market his product the farmer may sell to a higgler at the farm gate or take it himself to the AMC, a green grocer or a supermarket. The main mechanism is the higgler but the frequency of collection and volume that can be handled is very small. This results in an inordinate part of the farmer's production rotting in the field for lack of an adequate marketing mechanism.

Credit to small farmers is a continuing problem. Commercial agricultural credit, while available, serves mainly the medium to large scale farmer. The share of total agricultural credit going to small farms is only 15.2% of total agricultural credit. People's Cooperative Banks, operating under the supervision of the Agricultural Credit Board, offer short term credit for production or consumption purposes. However, rural credit administered through P.C. banks has declined from J$12 million in 1970 to J$6.2 million

in 1977. The Crop Lien Program, administered through the Ministry of Agriculture, was to provide short term credit to small farmers for productive purposes. No formal credit is available specifically for marketing. All new credit going to agriculture in 1980 totalled only J$6 million, which amount is clearly not adequate to meet the farmers' needs for working or investment capital. Low repayment rates -- 30 to 70 percent -- work against the availability of agricultural credit in both the short and long run. Many informal credit sources are used, however, and these are important to small farmers.

Farmer organizations and cooperatives are not predominant among small farmers. The Jamaica Agricultural Society (JAS) is the largest and oldest farm organization in the country. It claims membership of 100,000 in 1,000 branches. The JAS, through its farm supply stores, attempts to provide factor inputs to farmers, but many of these stores are inadequately financed and supplied. The JAS also lacks personnel and expertise. It has recently received a heavy government Grant for its' farm input supply program.

Extension services are provided through 4 regional offices and 14 Land Authority Offices of the MOA's Production and Extension Dept. Extension agents have numerous responsibilities for credit, subsidies and inputs in addition to teaching and demonstration. The ratio of farmers to extension agents is moderately high, further reducing their effectiveness in dealing with the small farmer.

In summary, the 7 main constraints to small farmers' increased production and income are: a) erosion of land with steep slopes, b) small and scattered holdings that are inefficiently managed, c) transportation problems associated with remote locations and terrain, d) limited availability of affordable labor, e) shortage of working and investment capital, f) limited new technology and extension services, g) limited and costly factor inputs such as fertiliser, seeds and tools and h) inefficient marketing systems and practices characterized by wide price fluctuations, inadequate market information, lack of alternative outlets, insufficient farm gate prices and purchases and high post harvest losses.* Phase I and II of this Project address the latter 3 constraints which have the broadest spread effect and which lessen the negative effects of the other 4.

2. Marketing Intermediaries and the AMC

The Jamaican agricultural marketing system has been characterized as a highly atomistic structure (a large number of very small intermediaries) serving a highly atomistic production sector (a large number of very small producers). This system includes small wholesalers and retailers, large truckers/wholesalers, supermarkets, green grocers and the Agricultural Marketing Corporation. The system has developed over the years in response to profit opportunities in satisfying farmer and consumer needs.

Support services to marketing intermediaries are minimal. A new government policy now recognizes the need for providing credit to market Intermediaries.

The backbone of the traditional small farming domestic marketing system is the small intermediaries, sometimes called Higglers who are small retail and wholesale intermediaries, numbering over 20,000. It is estimated that they are responsible for the distribution of perhaps 80% of domestic food crop production. The other 20% is distributed by a relatively small number of larger trucker/wholesalers, supermarkets, green grocers and the AMC.

---

* The USAID/USDA Small Farmer Assessment (November, 1978) provides a fuller version of this presentation of Small Farmer constraints and opportunities.

Several studies have been done on this system and the benefits and problems it poses for the marketing of domestic food crops. Generally, these small intermediaries, the majority of whom are women, market the produce of their family farm and purchase directly from other small farmers in small lots, to be sold at either wholesale or retail at a wide variety of locations. These intermediaries often will assist the farmer in harvesting his crops, a very attractive proposition to the farmer. Higher prices for produce and cash sales are additional incentives to the farmer to utilize this marketing mechanism. Family and community ties are also important.

Most of these small scale intermediaries operate on a part time basis, although they often do not have other employment. Many of them operate out of parish markets which are open only 1, 2 or 3 days a week. These intermediaries typically earned $11.80 to $28.00 per week in 1977, with capital outlays of between $56 - $67.

As several published sources have pointed out, small intermediary or higgler system is effective in that it does get the job of domestic food marketing accomplished. It gathers food from a large number of small farmers all over the island, overcoming what can be significant transportation difficulties, for sale in a large number of parish markets and for concentration in the Kingston terminal market. However, the problems inherent in this system are that it is physically inefficient, does not generate and cannot utilize market information beyond the local market, and involves high costs. The small size of individual lots makes bulking and grading impossible and adequate cooling, handling and packaging practices difficult. This results in considerable waste and loss either at the farm, because the full crop could not be marketed when ready, or in the market through poor handling and preservation. The overall effect is to depress potential for increased small farmer incomes and, ultimately, small farmer production.

Elements of this traditional marketing system have been evolving into medium scale wholesale operators. There currently operate several "mobile higglers" who own or operate small vehicles. They can purchase directly at the farm gate or at parish markets. They can retail or wholesale at curbside or other locations outside the parish market. They are able to purchase medium sized lots. Weekly capital outlay in 1977 exceeding $280 is a traditional way of defining membership in this group.

Another category of medium sized wholesalers, colloquially known as "super higglers", are in fact professional full-time wholesalers. The operation of this group generally ranges from a small 2 or 3 person venture to a business which employs up to 30 persons (although a selected few are even larger). Some of these wholesalers are often active only seasonally and often do not have a fixed location of business, but all would own their own transportation. They also purchase directly at the farm gate or at the wholesale market. They sell on a number of locations including larger urban markets, hotels, restaurants, green grocers and institutions on a contract or job lot basis. Purchases are usually in large quantities of high quality crops. Weekly outlay in 1977 exceeds $1,000.

Other small scale categories of marketing intermediaries exist such as peddlars or vendors who might purchase in small lots from other intermediaries or markets and sell at curbsides on weekends. The ranks of this type of intermediary increase when unemployment is high.

The Agriculture Marketing Corporation (AMC) was established by the GOJ in 1963 to bring order and efficiency to the marketing system. The AMC was established as a commercial venture to buy and sell agricultural goods and thus provide a mechanism for market guarantees. With time, AMC was also charged with the responsibility of moderating consumer price fluctuations (especially increases, of course) and making nutritious foods available at reduced prices to low income consumers.

The AMC also acts as a market intermediary, undertaking both retail and wholesale functions. Products are purchased from farmers, sometimes under contract, through 207 buying stations and assembled, stored, graded and packaged at eight regional branches. Central warehousing and wholesaling operations are headquartered in Kingston. In the past, the AMC has sold to wholesalers (typically 10%), higglers (19%), supermarkets (3%), government institutions (15%), hotels and restaurants (5%), final consumers (42%), and export markets (6%). As part of its price stabilization role, the AMC in the past has listed as many as 115 products with guaranteed buying prices, this program has now been discontinued. To meet objectives of restraining consumer prices and protecting social welfare, the AMC became involved in retail operations. In mid 1978, there were 19 AMC green groceries, 43 basic shops and 75 mobile routes. Many of the green groceries and basic shops have now been closed and the mobile routes discontinued. The AMC has not been successful in its objective of influencing market efficiency. It has not been able to compete with or undermine the traditional trader system in farm level purchases or influence consumer prices significantly. The AMC seems to have never handled more than 5% of agricultural and food products, contrary to the 20% figure often cited. Frequently, small trader intermediaries can offer farmers better prices for their produce than those offered by the AMC, leaving the AMC with lower quality merchandise or with excess production the higglers could not handle. The AMC has grade specifications for its purchases but these are not closely adhered to, nor does AMC have the resources at present to purchase all produce offered to it. Other problems with the AMC are excessive spoilage, waste, shrinkage, pilferage and procurement of unsaleable foodstuffs. Last year, on purchases of $9 million, AMC suffered losses of over $5 million. AMC's operations in the past four years have emphasized expansions in retailing with which a great proportion of the reported losses are associated. This retail function provides little service to the agriculture sector because there are already many retailers. Several of the AMC problems stem from shortage of management, poor sites, inadequate facilities and conflicting objectives.

The role of the AMC is currently under review and is expected to change. The Marketing Division of the Ministry of Agriculture has emphasized the need for AMC to stop retailing and concentrate on wholesale distribution as have several consultants. It is envisioned that AMC will concentrate on wholesale distribution, closing its seven outdated depots and moving their operations to the wholesale markets to be established under the Project. AMC capabilities in carrying out its wholesale operations will have to be upgraded to make AMC an effective operation.

3. Small Farmer/Producer Organizations

As stated earlier, substantial quantities of export crops such as sugar, bananas and coffee are produced by small farmers and marketed through commodity boards or producer organizations. While mainly servicing large and medium size farmers they also perform marketing services for small farmers. To some extent, they also provide technical assistance, fertilizer and planting materials for farmers.

The Christiana Potato Growers Association, established over 20 years ago to market potatoes and provide other cooperative services to large and small farmers, operates in fact as a producer's association with few co-operative aspects to its operations.

The Portland Blue Mountain Coffee Cooperative is an example of a successful producers group. It purchases and assembles both coffee and cocoa and also provides credit and fertilizer and other factor inputs.

Generally, a tradition of farmer organization exists in Jamaica, but has been focused on the export crops. Most such organizations have the tendency to serve primarily the large and medium sized farmers which dominate them.

4. Supermarkets and Parish Markets

Supermarkets centered in urban areas service mainly upper and middle class patrons. Estimates put their sales of domestic fresh food crops at 3% of total sales and fresh meats at just under 30 percent. Merchandise is generally purchased from large growers and distributors. A major deterrent to increased sales of fresh produce sold through supermarkets is the lack of a source of a continuing supply and volume of high quality graded products. No estimates have been made, however, of the proportion of retail sales accounted for by such supermarkets.

Parish markets are located throughout the island; about 99 currently exist. These are the major retail outlets for most Jamaicans. A few serve as both retail and wholesale markets. Generally, parish markets are outdated, dilapidated and unsanitary. Approximately 26 of these parish markets are being upgraded under a World Bank project (9) and an IDB project (17). The largest Parish market in Jamaica is the Coronation Market in Kingston, is also dilapidated and congested. But nonetheless, about 50% of marketed food products are thought to move through this market to other markets, to retail outlets and to consumers.

Problems in the parish markets include poor maintenance of facilities, financial unviability, produce handling methods that result in large losses, and inadequate storage and congestion. Generally grading, weighing and packing methods are far below acceptable standards and result in poor quality produce, high losses and high prices.

5. Consumers

During the 1970's, demand for domestic crops took a sharp rise as importation restrictions were put in place following years of stagnation as consumer preferences grew for imported foods such as rice, canned fruits and vegetables, wheat products and meats. During the last decade, farm gate prices about tripled while consumer prices about doubled. Farm gate prices were very high in 1978 and 1979. In 1981, food imports of staples have again been increased, over 1980 depressing farm gate prices at a time when there were downward pressures as production regained from 1980 weather-induced losses.

Consumers purchase food from either the parish markets, specialized green grocers, supermarkets, or numerous curbside vendors. Studies of consumer prices show high markups for food products from farm gate to market.

The following charts, taken from the Social Soundness Analysis (see Sec. IV-D), compare prices and markups in retail areas and a country parish market. Although these data are limited and somewhat out of date, the differences they show are believed to be generally accurate.

Comparison of Selected Item Prices in

Retail Outlets - Kingston 1980-81

	Cabbage	Red Peas	Yams	Tomatoes
Hi-Lo Supermarket	none	$7.50/qrt.	none	$1.20/lb
Lane Supermarket	$1.20	none	none	$1.60/lb
AMC Retail Outlet	.80	$7.00/qrt.	none	.90/lb
Parish Market	.70	$6.00/qrt.	.80/lb	$1.20/lb
Street Vendor	$1.00	$8.00/qrt.	none	$2.00/lb

Comparison of Mark-ups
Supermarkets & Parish Markets
in Kingston

SUPERMARKET	FARMGATE	RETAIL	% MARK-UP
Cabbage	.40/lb	$1.20/lb	300%
Red Peas	$3.00/qrt	$7.50/lb	250%
Tomatoes	.70/lb	$1.60	128%
PARISH MARKET-HIGGLER			
Cabbage	.40/lb	.70/lb	175%
Red Peas	$3.00/qrt	$6.00/qrt	100%
Yams	.35/lb	.80/lb	228%
Tomatoes	.70/lb	$1.20/lb	171%

Comparison of Retail Prices
in Rural Markets

	Cabbage	Red Peas	Yams	Tomatoes
Xiana	.40	$3.00	.35	.70
Porus	.50	$4.00	.60	$1.00
May Pen	.60	$6.00	.60	$1.30
Old Harbour	.60	$8.00	.60	$1.50
Spanish Town	.60	$8.00	.60	$1.40

Consumers, the final purchaser in the food marketing system, are the ones who suffer from the high markups on food crops resulting from inefficiences in the marketing system.

Income distribution data indicate that 67.5 percent of wage earners have a weekly income of under J$50. The only available expenditure data, for 1972, indicated that 40.6% of income goes for food, with the escalation of food prices since 1972, it is now estimated by the Nutrition Advisory Council that 70 to 80% of the income of the lowest income group goes for food.

Hotels, restaurants and institutions purchase direct from small, medium or large sized intermediary/suppliers who are reliable and who supply fresh produce. The AMC is not a main supplier to this group of consumers. No data is available on the total volume of food crop purchased by this group. But they are a growing and major consumer of domestic food crops.

There are about 125 agricultural processing plants in Jamaica, but they are not being utilized to capacity. Many were established by the government to utilize surplus crops. However, processing suffers from: a lack of stable supply of agricultural produce for processing; high priced inputs; unavailability of equipment and parts; and a general lack of technical know how. Because of under-utilization of present facilities, many of which are expensive white elephants, the government has invoked a moratorium on construction of new facilities.

Consumer demand has not been well studied. Although it is clear that Kingston and other major cities are demand centers, no one has a good grasp on what is demanded at what price. For example, only general(and simple) estimates exist of price and income elasticities of consumer demand for food.

6. Problems and Constraints in the Marketing System

The evolution in Jamaica of an atomistic market structure servicing an atomistic production sector has resulted in a system that does not allow for growth and expansion in the agricultural sector, either the productive or marketing functions. The capacity in Jamaica for increased agricultural production undoubtedly exists. However, current pressures on the marketing system impede that development, as evidenced by both high waste and spoilage on the farm, in transit to and in the market and high market prices paid by consumers, with farmers' margins less than certain. The system also faces periodic gluts and shortages between seasons and wide price variations among localities. This market structure will be hard pressed to serve the needs of an increasing urban population adequately. Sufficient and regular supply of commodities, while possibly produced, do not reach the supermarket, the parish market, the retail consumer or the food processor.

One of the main problems is that there are few market intermediaries capable of concentrating a large enough volume of a particular type, variety or quality of commodity to fulfill the demand that exists or could exist for differentiated products. There are no wholesale intermediaries or facilities capable of efficiently influencing the orderly movement of products from area of surplus to deficit areas. At the production end, no one producing unit or farm is sufficiently large or strategically located to assemble a large enough volume of a particular commodity to permit proper sorting into various grades for packing and shipping to the areas where demand exists. Specific problems in marketing being addressed by Phase I and Phase II of this Project are:

a) The existing marketing system is functionally fragmented. Marketing for major export crops is handled by commodity boards or producers' associations. For domestic crops, the farmer deals with one or more inter-

mediaries or, the AMC; in addition, the farmer or his family may market wholesale or retail locally or in the parish market or in Kingston in an effort to dispose of crops not purchased at farm gate.

b) Markets for small farmer food crops are volatile. Increases in production are soon followed by local declines in prices as the local ability to absorb the production is satisfied. When prices fall, even AMC is said to withdraw from the market or rapidly upgrade the overall quality it will buy at minimum prices.

c) Price fluctuations and uncertainty are a common occurrence.

d) Production planning information is lacking. The GOJ makes quarterly crop surveys, but no information is disseminated to growers. There is no projection of expected supplies, demand and income prospects for the different crops to provide the small farmer with economic intelligence to use in making his production decisions.

e) Daily market information is lacking. Neither buyers nor growers have adequate knowledge of current prices over the island. There are two newspapers which publish retail prices for a limited number of crops but do not mention volume, quality or demand. Monthly estimates of marketings are collected by MOA, but only used internally; they are not published or broadcasted.

f) Small growers employ low levels of production and harvest technology. This results in poor quality of products and reduces potential for increases in production and income. Farmers underinvest in technologies that would reduce loss.

g) Farm production fails to reflect consumer preferences. Farm production tends to follow a traditional planting pattern (lacking special efforts of the government to produce one or two products) and does not respond quickly to changes in consumer demand regarding variety and timing.

h) There are substantial seasonal gluts and shortages. Storage of seasonal surpluses for later use is inadequate, and there is a lack of planned production to try to meet off-season demand. The result is inadequate producer outlets during seasonal gluts, dissatisfied customers during shortages, and much spoiled merchandise in between.

i) Post harvest losses are high for fresh produce. Large amounts of waste and spoilage occur at all stages of marketing. Losses of 30-40% of total crop value are estimated.

j) Small quantities marketed of domestic crops. Volume that can be taken at the farm gate by a buyer (higgler or AMC) at a given time may only be a portion of the total volume produced and available for sale.

k) Small farmers lack a convenient point to assemble their produce in sufficient quantity for market. The small intermediary can only buy small quantities and mixed lots, resulting in high assembly costs per unit. If farmers had an assembly station, less crops would rot in the field for lack of a buyer and assembly costs would be lowered.

l) Low volume handled by intermediaries requires high markups.

m) Credit for retail intermediaries is lacking. The need to turn to non-institutional sources for credit and the large number of intermediaries seeking this credit makes it difficult for them to get what they would need to handle larger volumes.

n) Transportation is difficult. Many small growers' fields are located two to three miles from roads on rugged terrain, and both farmers and intermediaries lack mechanized transport. This makes travel difficult to and from markets, thereby increasing costs, restricting access to markets and increasing damage to crops.

o) Acceptable grades and standards are not employed. Failure to develop and use grades and standards impedes trading of produce and meats. Every lot must be inspected personnaly by the buyer to establish grade and quality as a basis for price. This increases the time and cost needed to carry out marketing. This affects all buyers and the producer.

p) Public markets are inadequate and inconvenient. Most of the 100 public parish markets are old, lack adequate space and light, are unsanitary and have inadequate storage facilities. Since they operate less than full time, produce buying at the farm is also concentrated on a few days, which may not coincide with the times that produce should be harvested.

q) Supermarkets are unable to get a steady supply of acceptable quality fresh farm produce and meat. Customers cannot depend on them as a steady source of quality fresh products which impedes the growth of supermarket selling of produce and meat.

r) There is a lack of a well developed and structured wholesale distribution network. A predominant group of wholesale distributors do not exist in Jamaica. This can be attributed in part to lack of wholesale facilities, refrigerated transport and a lack of adequate credit as well as to all of the above listed constraints.

s) Trained and experienced agricultural marketing personnel are lacking. They could be valued sources of information to producers, consumers and middlemen.

7. Project Rationale and Strategy

Several studies have been conducted to confirm the problems and constraints faced by farmers in Jamaica. These factors lead to the realization that marketing is one of the most important constraints to further sustained increases in agricultural production. Marketing improvement presents opportunities to: a) increase income to farmers, b) increase opportunity for expanded profitability for market intermediaries, and c) provide relatively large increases in the availability of agricultural and food products to the consumer.

The approach of improving the total agricultural marketing system of a country by introducing, among other elements, a wholesale distribution system as proposed in this Project has been tested in a wide range of countries. For example, similar systems were developed in Malaysia in 1964, Jordan in 1965, Peru in 1955 and expanded in 1971, Colombia in 1972, and various regions of Brazil from 1966 to 1975. In these and many other cases, the wholesale systems have led to substantial marketing efficiencies, reduced post harvest losses, and increased volumes of food products available to consumers.

Several factors contribute to the appropriateness of this approach for Jamaica at the present time. Jamaica has a rapidly expanding urban population. It has a relatively well developed all weather road network. There is a potential for substantial increased demand for locally produced quality food products in the tourist industry on the North Coast. Some experience in solving storage, handling, distribution, grading, and packing problems already exists in connection with the traditional export crops. The rudiments of a national wholesale distribution system exists, albeit sporadic and inefficient.

(a) Policy Framework: The timing of the Project is particularly appropriate. The GOJ's high priority efforts in recent years in increase agricultural production have clearly demonstrated the inability of the present marketing system to handle an expanding load.

Aware of the urgent need for marketing reform, the GOJ has been considering a number of policy options for carrying it out. These deliberations culminated in a recent Cabinet level policy and strategy decision calling for improvements to the marketing system as envisioned in this Project, and charging the Ministry of Agriculture (MOA) with responsibility for coordinating these improvements. As a result, the Ministry of Local Government, which has responsibility for the parish retail markets has agreed that responsibility for management of the new Subterminal Wholesale Distribution Markets should be lodged with the MOA. Also, the Ministry of Industry and Commerce, within which the AMC now falls, has requested MOA to develop a plan for AMC's future role and organizational relationship. A concepts paper has been developed by the MOA for this purpose.

Thus, the overall policy and organizational framework for Jamaica's future agricultural marketing development, which AID, IDB, FAO, and other donors have been encouraging the GOJ to define for some time, is now in place. Momentum should not be lost in moving toward implementation of planned improvements.

(b) Strategy: Early in 1979, the National Agricultural and Food Marketing Policy and Strategy was adopted by the GOJ (it has since been reaffirmed by the present Administration). The Policy, as stated, ".....is to foster the development of an Agricultural and Food Marketing System in Jamaica capable of efficiently distributing required factor inputs to producers, capable of stimulating an expansion of production of the type, volume and quality of commodities demanded, and capable of distributing the products of agriculture from the producers to the final consumers in a manner that will achieve the greatest economic and social benefit."

The strategy recognizes that the present marketing system cannot and should not be replaced. It also recognizes the need for: (a) an institution to be the catalyst to bring about change and assist in upgrading the marketing system; (b) adequate facilities to permit the assembly, concentration and distribution of agricultural and food products at the wholesale and retail levels; (c) producer organizations to give farmers a vehicle for performing more of the marketing functions; and (d) upgrading of the Kingston Corporate Area wholesale/retail distribution network. Phase I of the Agricultural Marketing Project is helping to build the institutional capacity of the GOJ to effect changes in the present marketing system through the establishment of a Marketing and Credit Division within the Ministry of Agriculture. This Division is designed to undertake marketing development, marketing extension, research, market information and quality assurance activities.

Phase II, (this project) builds upon the institutional capacity of the MACD to facilitate Phase I's upgrading of the present marketing system through its provision of technical assistance, training and extension to producers and intermediaries to increase efficiency of distribution, allow economies of scale and reduce post-harvest losses.

(c) Assembly and Grading Stations: When operational, the 25 stations combined will have an operating maximum grading capacity of 119,175 tons per year -- roughly 24 percent of marketed produce. At maximum operation, total volume of output from the 25 Stations could total 330,000 tons. Cold storage, to be constructed at an estimated six Stations, will have a total holding capacity of 24,000 tons. Depending upon turnover and volume of loading, the total amount of produce that could be stored is very significant. Assuming a very conservative turnover rate of four times per year (again recognizing that storage requirements are for short to medium term), total storage volume could equal 96,000 tons or about 20 percent of marketed produce.

In addition to the volume of produce that will be graded and/or stored at the Stations, a large volume will be marketed by the Stations and delivered directly from the farm to the market without physically flowing through the facilities. It is estimated that an average of 24,000 tons may be marketed in this manner, or 20 percent of the grading and packing capacity of the Stations.

As mentioned earlier, producer groups will be responsible for the operation of the AGS's and establishing an appropriate handling fee from proceeds to cover expenses.

The project, under Phase I, will be in a position to supply technical assistance to producer groups, as required, in the operation and management of the AGS's. The AGS's are expected to be self sustaining by the third year of operation, at which time producers will be required to fund 100% of their operating expenses.

(d) Subterminal Wholesale Distribution Markets:

a. Rentable market and storage area for the four Markets totals 33,184 square feet. The volume of produce required to move annually through these markets to break even is 0.7 tons per square foot.

At a minimum, therefore, 16,450 tons of produce will be required to move through each Market or a total of 65,800 tons through the four Markets each year. This represents only 13 percent of the 500,000 tons of fruits, vegetables, meat and fish, eggs and poultry marketed annually through regular market channels in Jamaica. It is anticipated that the throughput of these markets will considerably exceed this volume. According to FAO studies of market operations an average of 0.5 tons of sales per square foot can be expected for markets in the least developed countries, and up to 2.5 tons per square foot in the most developed countries can feasibly move annually through markets of the type envisioned under the Project. Prior to construction of the Markets at least 50% of the rentable area must be committed, which means that the Markets will start producing revenue the first year, and increase annually as more space is rented. Cold storage space and refrigerated trucks will also be available for rental.

b. A mandate defining the role of the AMC within the upgraded marketing system has not been approved as yet. There is, however, an understanding in the MOA and MIC as to the future role of AMC. In the final analysis AMC is expected to function solely as a self sustaining wholesale distributor. Like other commercial wholesalers, it will rent space in the proposed Subterminal Wholesale Distribution Markets. The AMC is currently looking at the viability of its retail outlets and is in the process of phasing out the losers. It is also studying the possibility of phasing out the welfare programs subsidized through AMC, primarily the AMC stores in low-income areas. (This operation may be taken over by a separate government agency, however.) Some of the 207 AMC buying stations, of which most are closed down or in some stage of abandon, could be future sites of AGS's. Likewise some of the closed Banana Boxing Plants could also be used as AGSs. The benefits derived from some of these sites are their locations, and the fact that some of the sites are already owned by the GOJ. The AMC facility serving the Kingston area is currently under study by the Marketing Division's Urban Market study that is addressing the upgrading of the marketing facilities in the Kingston Corporate area. The GOJ, Urban Development Corporation and MOA recognize that a new Terminal Wholesale Market is needed in Kingston and that the AMC facility is underutilized.

(e) The Function and Impact of Phase II: The flow of agricultural products from producer to consumers in the marketing system may take any of a number of channels. The marketing channel chosen depends on a variety of circumstances such as type of crops, diversity of crops, volume, proximity to market, quality of produce, seasonality, market research, consumer and retailer preferences, export potential, price policies and practices, size of producer, risks, availability and proximity of processors, and/or HRI trade (Hotel, Restaurant, Institution), production factors, cultural attitudes, adoptability of producers, market intelligence, environmental factors, geography, financial considerations, competition, packageing needs, transportation efficiencies, opportunity costs, etc. Basically, there are three channels the producer can chose to follow:

1. Producer/AGS --- Consumer (Rare)
2. Producer/AGS --- Retailer --- Consumer (Tradition- most frequent)
3. Producer/AGS --- Wholesale --- Retailer --- Consumer (Common)

Although the existing structure of the marketing system in Jamaica will remain basically the same, the AGS's and SWDM's will greatly facilitate the flow of produce and agricultural inputs; provide economic efficiencies in marketing; provide graded, differentiated and packed products on a regular basis to the various market outlets such as the HRI trade, export trade, processors, etc; reduce post harvest losses, etc. Figure B PAGE 22 illustrates the various functions and relationships of the participants in the marketing system. An example of how the produce will flow through the proposed upgraded system is as follows:

Small Farmer/Producer

Farmers will harvest their crops and either transport their produce to the AGS themselves, or arrange for pick up by/through the AGS. (Producer may also choose to sell directly to processors, wholesalers, HRI, retailers, higglers, or consumers.)

AGS Facility

Here the produce from member producers is assembled, graded, packed, stored, and arrangements made for sale. The AGS's will sell their graded products to wholesalers or others (processors, HRI, consumers, retailers, higglers, exporters) who will arrange for transport themselves, or request and pay for delivery by the AGS's. Producer associations will have funds to lease transportation.

SWDM

Here the produce is received and concentrated in greater volume for distribution to various market outlets including other SWDMs, wholesalers, retail outlets, processors, HRI trade, and exporters. Refrigerated trucks will be available for wholesalers to rent for delivery of the more perishable produce to the most distant markets (3 per SWDM - 2 for produce; one for meat products). Retailers or other wholesalers will also be able to buy and transport their own produce from the SWDM's.

Retailers

Final Retailers such as curb-side higglers, supermarkets, and green grocers will then offer the produce for sale directly to consumers.

This upgraded system for agricultural commodities and products will provide for a more regular and consistant market for farmers, and enhance an orderly and more rapid distribution of product from farmgate to consumer. Less handling, better packaging and rapid distribution will reduce post harvest losses. It will help to increase the available supply of produce at the retail level by permitting the absorbtion of all of the production of small farmers into the marketing system, and eliminating the periodic shortages and gluts in Jamaica, by improving the spatial distribution and timing of release of production. It will also help to decrease retail prices to the consumers and increase the quality of products marketed and available to them. The lower retail prices will influence greater consumer demand, and in turn, help stimulate an increase in production. The differentiated, graded and higher quality products will also command a higher price at the retail, wholesale, and farmgate levels, thus benefiting all 3 target groups.

Figure B

Marketing System Illustrating Role of Producers, Assembly and Grading Stations, Wholesalers, Subterminal Wholesale Distribution Markets and Retailers in Enhancing Assembly, Concentration and Dispersion Roles

Producers
(Critical Functions)

Planting correct varieties
Producing High quality crops
Harvesting
Handling
Transportation

Marketing Groups
(Critical Functions)

Grading
Packing
Handling
Storage
Transportation

Wholesalers
(Critical Functions)

Volume Buying
Concentration
Distribution
Handling
Transportation
Storing

Retailers
(Critical Functions)

Handling
Transportation
Packaging
Selling

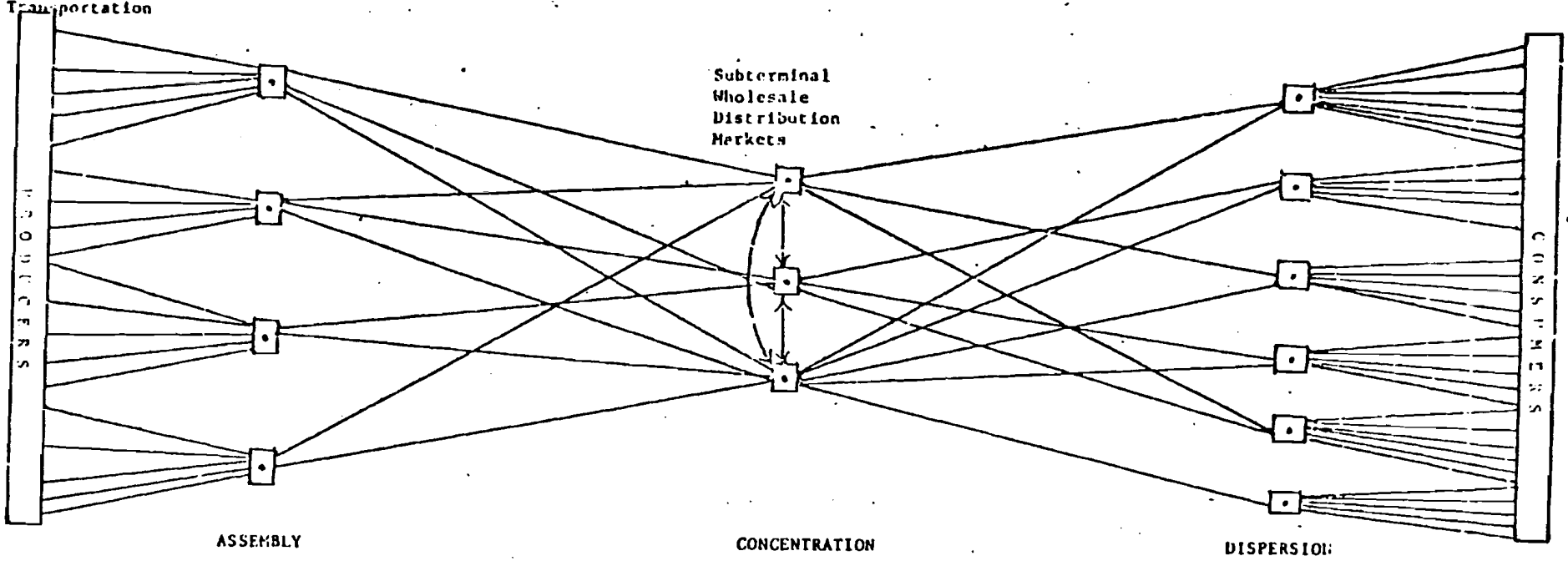

BEST AVAILABLE COPY

D. AID and Other Related Donor Assistance

The adoption by the GOJ of a National Agriculture and Food Marketing Policy and Strategy was a precondition established by the Inter-American Development Bank (IDB) and USAID for funding of marketing projects. To achieve the objective stated in the strategy statement several measures have been formulated. The first element, funded by IBRD and IDB, is undertaking the reconstruction of 26 Parish Retail Markets. The Agricultural Marketing Development Project (Phases I and II) is the second element of the overall marketing development strategy with Phase II being the key to success. The third element, the construction of a new Terminal Wholesale Distribution Market and reconstruction of retail markets in the Kingston and St. Andrew corporate areas is still in the planning stage. A study of marketing in the corporate area is currently being undertaken by the Marketing Division for future funding of the terminal market. The fourth-element is a proposal to construct holding facilities for perishable products at airports and seaports.

The proposed Project will be implemented in conjunction with other GOJ Ministries and agencies. It will be complementary to, and in some cases necessary for, achieving goals and objectives of other GOJ and internationally funded projects. Several of these related projects are as follows:

a) Inland Fisheries Project (USAID) ($8.9 million)[1]

The establishment of the Marketing Division, a construction of subterminal markets and development of producer marketing organizations will enhance the benefits of this $8.9 million project. Once the volume of freshwater fish reaches the level at which local markets near the producing area can no longer absorb the supply, countrywide distribution will be a constraint requiring the concerted efforts of a Marketing Division and the facilities, and intermediaries to assemble, concentrate and distribute.

b) IBRD First Rural Development ($15 million)

Nine parish markets in the Western Region of Jamaica are being reconstructed. These markets will benefit directly from implementation of this Agricultural Marketing Project and their long run prospects will be improved by an improved wholesale distribution network and by the marketing extension activities of the Marketing Division.

c) IDB Parish Market Reconstruction Project ($10 million)

Under this project, 17 parish retail markets (located throughout all regions except the western) will be reconstructed. Optimum use of these markets will depend upon this Agricultural Marketing Project.

d) Integrated Rural Development Project (USAID) ($26 million)

The proposed Agricultural Marketing Project will be instrumental in initiating marketing programs for the small farmers involved in the project areas. Presently the IRDP is having to fund the program to renovate Assembly and Grading facilities at Coleyville (Project Area) to be operated by the Christiana Potato Growers Co-op which also will be reorganized by the project. Other inputs related to the Agricultural Marketing Project, funded by IRDP, include one man year of technical assistance, two extension specialists, and fundings for labor, containers, supplies, utilities, transport, and other operating expenses.

1/ Figures for this and all projects in this listing include GOJ contributions.

e) Agricultural Planning Project (USAID) ($6.6 million)

This project will upgrade the MOA's capabilities to collect and analyze data, manage the training of its personnel, and develop, interpret and analyze data, manage the training of its personnel, and develop, interpret and analyze government policies as they affect agricultural and rural development. The Agricultural Marketing Project will utilize basic data developed by the Planning Project and in turn will provide it with an analysis of markets, situation and outlook analysis, and daily and periodic market news.

f) Self-Supporting Farmers Development Program (GOJ/IDB)($34 million)

This IDB funded credit program is operated by the Jamaica Development Bank for farmers in the 5-25 acre category. Interest of 10 percent is charged with the repayment and moratorium depending upon the nature of the enterprise. Farmers must provide security for loans, preferably a registered title for the land on which the development is to be undertaken. There is no ceiling on the amount of a loan.

g) Agricultural Radio Project (USAID/GOJ/JBC)($0.5 million)

This project will build a radio transmitter in Mandeville and broadcast agricultural programs to the small farmers in the area. This will facilitate the dissemination of market reports and extension information developed by the Marketing Division.

h) National Planning Project (USAID/GOJ) ($0.3 million)

The Agricultural Marketing Advisor funded under this project has assisted the MOA to develop a Marketing Strategy and Policy and in designing and implementing this and other Ministry marketing activities. The proposed Project is part of that strategy.

i) Yam Curing and Storage Project (FAO) ($0.18 million)

The Project will use established experimental technology for curing and storing yams and develop it for use on a commercial basis.

j) Research Project (IDB) ($10 million)

The Project will expand research facilities at all existing national stations to assist in carrying out applied research in general agriculture.

k) Oyster Project (CETA/GOJ) ($0.3 million)

This is a three year project between UWI and MOA to develop the requirements for the commercial production of oysters. The Marketing Division of MOA is currently assisting with the marketing requirements for the oysters.

Two related (GOJ) agricultural sector programs that will benefit from the project include Project Land Lease and Pioneer Farms. The Project will provide marketing expertise and assistance in developing marketing programs for farms established under these programs.

III. DETAILED PROJECT DESCRIPTION

A. Phase I and Progress to Date

1. Marketing and Credit Division (MACD)

The establishment of a cohesive Marketing and Credit Division (MACD) within the Ministry of Agriculture (MOA) was the key element in the National Agricultural and Food Marketing Strategy. It will be the catalyst to bring about improvements in the marketing system and, in turn, to increase agricultural production and incomes. The new Marketing and Credit Division will also provide a much needed influence upon the Ministry, by means of focusing attention of the end uses of the products of agriculture.

The MACD has been structured to meet the minimal requirements of providing the various activities that must be performed to effectively upgrade the agricultural and food marketing system.

Ninety-six technical and other positions were identified and prescribed to establish the new Marketing and Credit Division, for which 50 positions have been filled as of November, 1981. The new MACD will consist of 3 branches; Market Information and Research, Marketing Development, Quality Assurance. There will also be a Regional Marketing Extension office. This new Division is now or will soon be responsible for the following functions:

- Development and diffusion of diverse marketing information and research results to producers, intermediaries, consumers, potential agribusiness investors and GOJ decision makers;
- Conduct various research/analyses as to supply and demand, production costs and margins, crop forecasts, market trends, price, volume and quality monitoring, new crops or new uses for traditional crops, etc.
- Assist in the formation, strengthening and support of small farmer organizations, their operation of the Assembly and Grading Stations, including obtaining financial credits, obtaining and distributing factor inputs;
- Develop and carry out formal and informal training programs for small farmers, producer groups, market intermediaries and MACD staff;
- Assist in the acquisition of new markets and facilities, as well as the expansion of existing ones either domestic or foreign.

2. The second component of Phase I was technical assistance. A total of 29.5 person-years of highly specialized long-term USDA technical assistance was required to advise and assist the new MACD to carry-out the above described functions and to be self-sustaining by the end of the Project. Three person-years of short-term specialists were also provided under Phase I. All six of the long-term technical assistance advisors are presently in country and functioning in preparation for the implementation of Phase II.

3. The third component of Phase I was short and long term training of the MACD staff as well as for some producers, intermediaries and operators of the Assembly and Grading Stations (AGS) and the Sub-terminal Wholesale Distribution Markets (SWDM). A total of 59.6 person-years of training will be provided, affording training in various aspects of marketing to 630 people. Twenty person-years will be for long term external degree training, 5 person-years will be short-term external training and 34.6 person-years will be short-term "in-country" training. The external training will be financed by AID and all in-country training will be financed by GOJ. (The first 3 AGS established in Phase II, will serve as on-the-job training facilities for both the MACD staff and members of the producer organizations.

The 1st short-term external trainee is currently at Cornell University. Training trips have been completed by MOA personnel and some farmers to examine the agricultural marketing systems in Florida, New Jersey and New York and Headquarters of the USDA in Washington, D.C.

4. The 4th component of Phase I was commodity support procurement. Transportation will be a key factor in successful implementation of Phase I of the Project. The Ministry has no vehicles to service the augmented travel needs implicit in new projects, and staff immobility is already a serious problem.

A total of 11 utility vehicles will be financed for use by the Marketing Division. Two vehicles are required for each of the three branches of the Division to carry out their programs. One vehicle is required for administrative purposes, and one vehicle is required in each of the four districts. Other commodities to be provided include miscellaneous equipment and supplies required for training programs, research and general Division activities. These include calculators, audio-visual equipment and equipment for quality control and inspection.

All vehicles have been ordered as well as some of the miscellaneous equipment. Completion of all commodity procurement is expected by the end of the 2nd quarter in FY 82.

Complete details of all aspects of Phase I are contained in the original Project Paper, see AID Project Loan No. 532- T -013 .

B. Phase II

1. Goal and Purpose

The goal of the project is to improve the living standards of farmers, market intermediaries and consumers. This will be measured through changes in farmer income, market intermediary income and through the increased availability in the markets of differentiated products at differentiated prices. The attainment of the project goal makes assumptions regarding the agricultural sector: 1) no major shift in consumer preferences regarding domestic versus imported foods; 2) no significant adverse movement in the terms of trade of agriculture vis-a-vis the rest of the economy; and 3) normal weather patterns. The first assumption is needed because shifting consumer preferences could significantly dampen the expansion of the market for domestic food production, to the detriment of farmer and intermediary incomes. The second assumption is to recognize the fact that changing incentives for small and medium-sized farmer production of crops for the domestic market in favor of traditional export crops, while unlikely, could reduce the volume of production handled by the system and available to consumers. And, of course, achievement of goal and purpose level targets depends on normal weather patterns as unusually harsh weather, especially over a long period of time, would be inconsistent with achieving increased incomes and wider product availability.

The purpose of the Agricultural Marketing Development Project (a shortened version of the original purpose) is to initiate the development and application of improved marketing practices for food crops and meat and fish products for domestic (and export) markets. This purpose will be achieved by upgrading the present outdated and inadequate marketing system and facilitating the role of the private sector through:

a) the establishment of a Marketing Division within the Ministry of Agriculture (Phase I) which is complimentary to and a prerequisite for Phase II;
b) Phase II as provided in this Addendum. Phase II consists of:
   - the construction of four Subterminal Wholesale Distribution Markets; and
   - the construction and establishment of 25 Assembly and Garding Stations.

The roles of producers, farmer associations market intermediaries, consumers, and private sector organizations remain basically the same as in the original PP. The logistics of distribution and quality of products marketed will improve with the proposed Assembly and Grading Stations, and Subterminal Wholesale Markets.

Project outputs and purpose will be achieved through the provision of A.I.D. funded inputs of technical assistance, training, commodities, construction, and contingencies, and GOJ inputs of land, operating expenses for the Marketing Division, AGS and SWDMs and contributions in the other areas.

2. Assembly and Grading Stations (AGS)

In Jamaica there are hundreds of uniquely identifiable production areas, with producers identifiable in terms of "groups" having a similar orientation. To improve the efficiency in the marketing of agricultural products it is necessary to assist the farmers in cooperatively assembling, grading, packing, storing, transporting and marketing their products. To achieve optimum marketing efficiency, it is also necessary that farm produce be assembled, graded and packed for distribution as near to the farmgate as possible.

Of the many AGSs that will eventually be needed, it is estimated that within a project time frame of five years, 25 AGSs could be completed. The construction of each AGS will be initiated upon review of a completed socio-economic survey, and subseguent identification of a viable producer group which will operate, and eventually own the facility. This procedure is in full accordance with project analyses, in particular the social analysis. In addition to being an instrument to determine potential demand and effective participation, the survey will also be used to help determine the actual site location and size of each AGS. The MACD survey questionnaires, methodology and team composition will be subject to USAID review and approval.

Establishment of the Stations will permit the cooperative collection and assembly of commodities in volumes large enough to sort into identifiable grades and to facilitate shipment to various markets including the proposed Subterminal Wholesale Markets. For small intermediaries, the Assembly and Grading Stations will greatly reduce the cost of obtaining produce because they can go to a facility and obtain whatever volume they require of the commodities handled. The product will already be graded, affording the intermediary the additional opportunity of purchasing whatever grade or quality is desired. Collecting like commodities and differentiating them by grade will Promote economics of scale, result in greater unit profit to the producer and provide the existing differented markets in Jamaica (hotels, restaurants and institutions) with the quality and quantities required on a regular basis. Assembly of larger volumes of differentiated products in the producing area will also encourage development and growth of larger, more efficient distributors (wholesalers) and the evolution of a more structured marketing system.

BEST AVAILABLE COPY

Assembly and Grading Stations will also provide a means of distributing factor inputs (fertilizer, insecticides, fungicides, herbicides, small tools and implements, and containers) to small farmers. The provision of credit to producers will also be facilitated through the producer associations. The Marketing Division of MOA will facilitate the availability of credit from the agricultural development bank and other sources. Presently, small farmers do not have easy access to such inputs.

a. Site Selection

Selection of areas and sites for the stations will be undertaken on a case-by-case basis. Each site will be about two acres. Initial contact with producers by production and marketing extension staff, to upgrade marketing knowledge and awareness, will precede area and site selection. Prior to site selection and establishment of a station, a detailed socio-economic survey will be conducted in producing areas by the Marketing Division to ascertain producer interest, to assist in selection of production areas, to serve as a basis for initiating producer organizations, and to assure the desired degree of participation by farmers.

The survey will provide information on farm families, higglers, inter-relationships between farmers and higglers, number of households and their degrees of involvement and dependence on higglering, the type and relative influence of social organizations, and the leadership structure.
The survey will also focus on the affect of AGSs on the market intermediary's business, their desire for future participation, and their potential effect on the AGS. Extension strategy and training programs will be oriented to overcoming the perceived socio-cultural constraints as well as constraints of a more technical nature. In light of the Government's drive to increase exports, especially non-traditional exports, areas offering good export crop production potential will be especially attractive and can be expected to receive some priority in Ministry decision-making, as long as such areas and their groups are acceptable on all other criteria.

Selection of AGS sites will be made by the MACD. Criteria for selection of station sites and producer groups will include the following:

- producer and local intermediary interest in joining a group marketing activity;
- production know-how of producers;
- volume of particular crops within a reasonable radius;
- adequacy of feeder roads; and
- availability of utilities.

The MOA, in order to have a reasonable degree of assurance that the producer organization selected for an AGS will be committed to participation, as intended in this project, will require that the group be formally constituted and that it agree to the following terms prior to construction:

1. to use facilities for the purposes for which intended in this project;
2. to cooperate with the MOA;
3. to be responsible for operating expenses according to a predetermined schedule approximately as follows:

1st year	0
2nd year	50%
3rd year	100%

4. to either purchase or rent AGS and equipment at end of three years or before, if qualified (the initial three years will be a grace and qualifying period). Qualification will be based on acceptable performance; and

5. to act as a financial agent for the disbursement of credit to producer members;

b) AGS Size, Equipment, Facilities:

The type and complexity of facilities to be constructed and the operations to be undertaken will vary from station to station. The criteria for determining the type and size of facility and equipment required at each site will include the following:

- types of crops to be graded, packed, and marketed;
- general quality of produce;
- size, number and volume of producers;
- range of commodities produced;
- target market (e.g. domestic, export or both); and
- distance from markets.

Two basic sizes of the AGS facilities have been developed. Final design of each unit will be based on these models, but investigations of proposed sites reveal that the need is for 19 of the smaller models and 6 large ones.

Areas and site selections for all 25 AGSs will be made and plans prepared throughout the five years of the Project, subject to USAID approval. Three sites will initially be selected, constructed and operational before the end of the first project year. They will probably serve as training and demonstration centers for other centers to be established. By the end of the second project year, seven more will be operational, and five more each year thereafter. The Agricultural Research Project Unit (ARPU) will be responsible for site plans, construction blue-prints, letting contracts, and supervision and inspection of contractors' performance. USAID's engineer(s) must also approve all final designs and technical specifications.

Base construction costs for the 25 stations are estimated to be $2.4 million, see Table 2. The equipment to be provided under the Loan includes grading and packing equipment, pre-cooling equipment (hydro or air blast), roller conveyors, push carts, and scales (see Table 3 and Annex F).

Scheduling for construction of the Stations is as illustrated in Figure A.

FIGURE - A

Scheduling of Construction for Assembly and Grading Stations

ACTIVITY	Year 1	Year 2	Year 3	Year 4	Year 5
Buildings & Equipment (3 stations)	(3)				
Buildings & Equipment (7 stations)		(7)			
Buildings & Equipment (5 stations)			(5)		
Buildings & Equipment (5 stations)				(5)	
Buildings & Equipment (5 stations)					(5)

The facilities, each to be located on a site of approximately two acres, will consist of a grading and packing shed, an office and dry storage block and, at some Stations, cold storage. The minimum size of a grading a packing shed will be 34 x 60' which is sufficient to accommodate the grading and packing operations and stack incoming produce before grading, as well as the packed produce awaiting shipment.

The office will accommodate a manager and, depending upon the size of the operation, a storekeeper/asst'g clerk and other staff as required. Rest rooms and changing rooms will also be provided. Dry storage is required for supplies, such as boxes, labels, detergents, and waxes, depending upon the size and complexity of the operation.

TABLE 2

25 ASSEMBLY AND GRADING STATIONS (AGS)

ESTIMATED CONSTRUCTION COSTS

($US Rounded)

SMALL MODEL - 2 structures (19 Units)		TOTAL	AID	GOJ
Grading & Packing Shed - 34' x 60':				
2040 sq. ft. @ $10.20		20,810		
Office & Toilets - 12' x 15':				
180 sq. ft. @ $16.85		3,035		
		24,000	18,000	6,000
Site Development: (rounded)				
External Works @ 30%	7,160			7,160
Utilities @ 20%	4,770			4,770
Finishings @ 15%	3,575			3,575
Misc.Access. @ 10%	2,385	18,000		2,385
Sub-Total: Construction Cost		42,000	18,000	24,000
Land Acquisition - 2 acres @ avg. $2550		5,100		5,100
Total Unit Cost		47,100	18,000	29,100
19 Units		894,900	342,000	552,900
(A) Total costs of 19 units (Rounded)		895,000	342,000	553,000
LARGE MODEL - 1 structure (6 Units)				
Grading & Packing Shed - 34' x 80' (2720 sq.ft.)				
Office & Toilets - 10.5' x 34' = 357 sq.ft. @ $16.85		6,025		
2 cold rooms - 25 x 25 ea. =				
625 x 2 =	1250 sq.ft. @ $100	125,000		
Shed	2363 sq.ft. @ $10.20	24,100		
	3970	155,125	116,345	38,780
Rounded		155,150	116,350	38,800
Site Development:				
External Works @ 30%	42,720			42,720
Utilities @ 20%	28,480			28,480
Finishings @ 15%	21,360			21,360
Misc. Access. @ 10%	14,240	106,850		14,240
Total Unit Construc. Cost		262,000	116,350	145,650
Land Acquisition - 2 acres @ avg. $2550		5,100		5,100
Total Unit Costs		267,1000	116,350	150,750
(B) Total Costs of 6 Units		1,602,600	698,100	904,500
Cost of 25 Units		2,497,600	1,040,100	1,457,500
(C) A & E Design & Supervision		92,250	-	92,250
		2,589,850	1,040,000	1,549,750
Total Costs of 25 Units (Rounded) (A, B & C)		2,590,000	1,040,000	1,550,000

BEST AVAILABLE COPY

Table 3

Assembly and Grading Station: Equipment Costs

($ US Rounded)

All Costs are Foreign Exchange Funded by AID

Small Model-19	Quantity	Total
Grader Assembly (34' X 60' = 2040 sq.ft. each)	1 @ $15,000	$ 15,000
Dump Hopper		
Cull Eliminator		
Inspection Roller Section		
Brushes		
Sizer		
Packing Tables		
Skate Roller Conveyor	80 @ $10	$ 800
Push Carts - 2 @ 350	2 @ $350	$ 700
Platform Scales - 2 @ 450	2 @ $450	$ 900
		$ 17,400
Spare Parts @ 15%		$ 2,610
		$ 20,010
Shipping & Insurance @ 30%		$ 6,003
UNIT COST		$ 26,000
TOTAL EQUIPMENT COST FOR 19 SMALL UNITS		$ 494,000

Large Model-6		
Grader Assembly (34' X 80' = 2720 sq. ft. each)	1 @ $50,000	$ 50,000
Dump Hopper		
Cull Eliminator		
Washer		
Brushes		
Dryer		
Rinser		
Waxer		
Sizer		
Inspection Roller Section		
Distribution Belt		
Packing Tables		
Pre-Cooler (Hydro or other)	1 @ $10,000	$ 10,000
Skate Roller Conveyor	130 @ $10	$ 1,300
Push Carts	2 @ $350	$ 700
Platform Scales	2 @ $450	$ 900
		$ 62,900
Spare Parts @ 15%		$ 9,450
		$ 72,350
Shipping & Insurance @ 30%		$ 21,700
UNIT COST		$ 94,050
TOTAL EQUIPMENT COSTS FOR 6 LARGE UNITS		$ 564,300

TOTAL EQUIPMENT COSTS FOR 25 AGS	$1,058,300

FIG. C

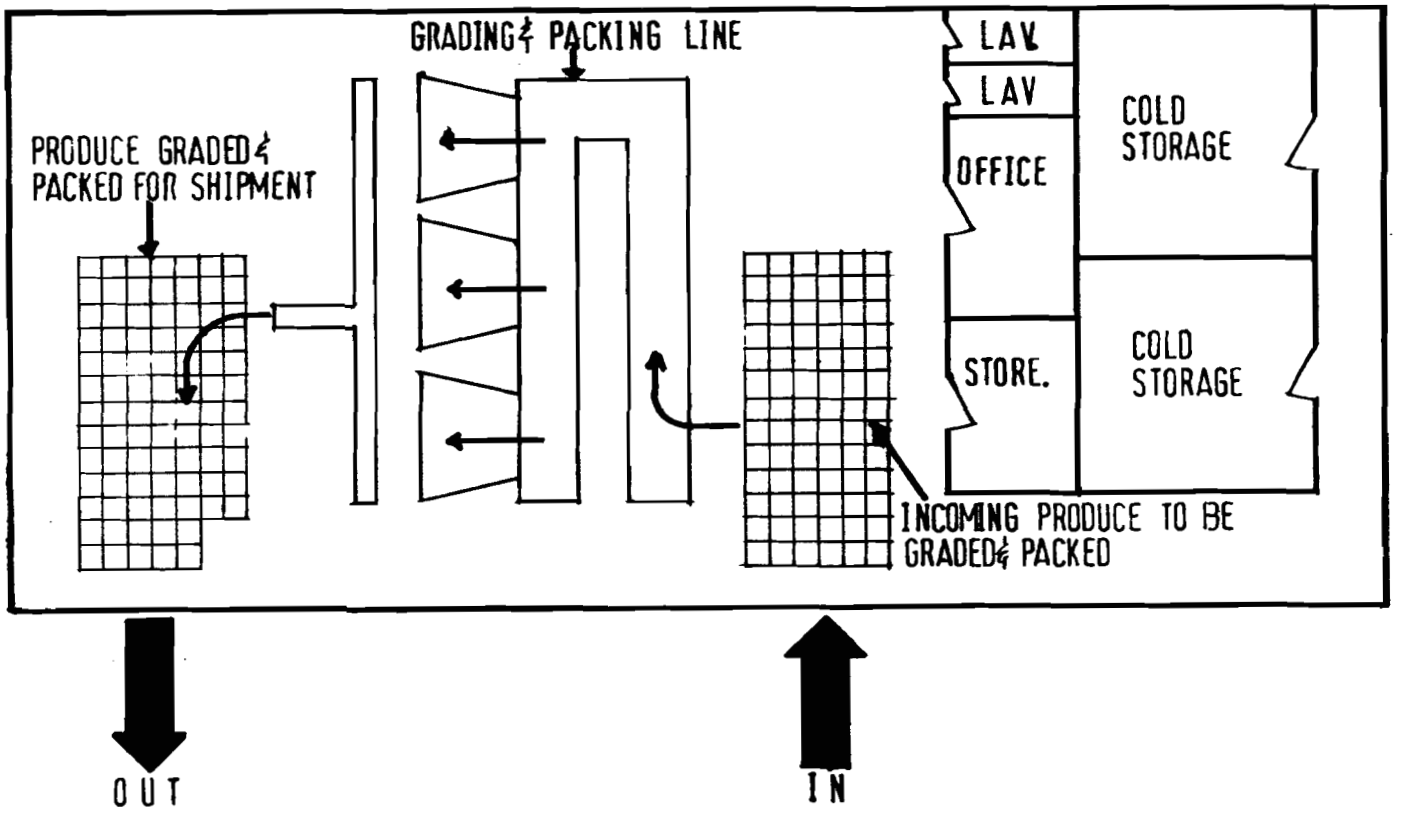

Possible Layout of the 6 Large Model Assembly & Grading Stations

Cold storage will be provided at those facilities located in six high producing areas and particularly where there have been historical problems with the removal of production coming in a short period of time. The type of storage will be determined by the crops produced in the area that may be handled by the facility.

Equipment to be installed at the various stations will vary greatly. The minimum will include a simple grader with cull eliminator, inspection rollers, brushes, sizer and packing tables. Other facilitating equipment will include roller conveyors, scales, pushcarts, and miscellaneous packing aids. The larger facilities, depending upon the crops to be handled, will have a grading line consisting of inspection rollers, cull eliminator, washer, dryer, wax applicator, sizing units, and packing tables. In addition, pre-cooling equipment (i.e., hydro-cooler or air-blast) may be provided. Roller conveyors, scales, carts and other packing aids will be correlated with the type of operations and the target market.

c. Management System:

1. organization: Producers will be organized into cooperatives or producer associations. The particular form of organization appropriate for a given area will be determined by the Marketing Division of the Ministry and by the potential membership, on the basis of the technical and socio-economic surveys to be made in connection with site selection. Once the appropriate form of organization has been determined, training programs can be designed accordingly.

2. staffing: Staff of the AGS's will vary according to the type and size of operation, but in general, will consist of a manager, a storekeeper/acct'g clerk, and part-time or seasonal employment for security personnel and laborers. Staffing costs over the five year life of the Project are shown in Tables 4, 5 and 6 . The producer group will be responsible for hiring management and employees and will eventually fund 100% of all operating costs. The group will be responsible for marketing decisions such as pricing, and assessing handling fees to members.

3. credit and payment to producers: The producer organization shall be formally instituted so that it will be qualified to secure credit from existing credit institutions. Credit secured will be utilized to purchase production inputs and operate marketing activities of AGS. Production inputs will be supplied to producer members on credit.

Payment for inputs will be deducted on a phased basis from proceeds of members' crops marketed through the AGS. Credit will also be utilized by AGS's to advance payments for crops delivered by members. Payment to members will be advanced based on an agreed percentage of the expected sales price, plus payments during the season. Patronage dividends will be made at the end of the season after expenses and retained earnings have been determined.

4. operating expenses of AGS's: The funding for operations of the AGS's will be the ultimate responsibility of the producer organizations as previously stated. During the first year however, the GOJ will fund up to 100% of all operating costs; during the second year GOJ will fund up to 50%; and during the third and following years the producer groups will fund operating expenses entirely. Expenses to be incurred in the operation of the AGS's are staffing, utilities, materials and containers, vehicles and maintenance. Costs, derived from MOA are based on present Jamaican costs for the different components and anticipated rates

of usage of AGS's. Staffing costs as seen in Table 6 will increase annually according to increased demands for labor with increased rates of product flow thru, and annual salary increments. Utility bills should remain fairly constant except for inflation. Materials and containers needed for assembling, grading, and packing will increase with increased flow-thru. An average cost of $20,300 is used for years 2-5. Maintenance of building and equipment will also increase with increased usage. Funds are also being made available for vehicle rental, fuel, and maintenance. An average cost of $10,000 per year is used for years 2-5. Use of vehicles initially will be on an irregular and seasonal basis, and hence, not initially economical to own. AGS management may decide later on if they wish to purchase a vehicle.

The total AGS operating costs for the five years of the project is shown on Table 6 . The portion of the operating expenses to be funded by the producer groups is subtracted from the gross operating expenses to arrive at a net cost to GOJ.

d. Training:

Training will consist of short-term classroom training, on-the-job training and general extension training, and will be provided by technical advisors of the Marketing Division, to personnel of the Assembly and Grading Stations, farmers and market intermediaries. Training will address the concept of utilizing grades and standards, the logistics of produce collection, the operation of grading and packing equipment, the use and operation of cold storage, and general marketing concepts and knowledge. Station managers and key personnel will receive training in special three-week courses. Others will receive on-the-job training supervised by the technical advisors and Marketing Division personnel. The first three Assembly and Grading Stations established will provide on-the-job training for personnel of succeeding Stations.

e. Utilization:

Selection of AGS areas will be based on likely participation by farmers, and determined by the socio-economic survey, on the basis of social and economic viability of different production areas. To date, 28 different potential sites have been identified as definite prospects. See Annex H.

Table - 4

ASSEMBLY AND GRADING STATION

STAFFING COSTS PER UNIT 1/

(US $ 000)

General Manager	5.0
Financial/Credit Manager	2.2
Security	1.3
Laborers (1.5 X 5)	7.5
	16.0

1/ Costs are computed for project year 1 and the first year of AGS operation. (See Table C and D for extended costs).

TABLE 5

ASSEMBLY AND GRADING STATIONS ANNUAL OPERATING EXPENSES

PER YEAR OF OPERATION

(US $ 000)

Operating Expenses		Year 1	2	3	4	5
Staff and Labor 1/						
Year of operation:	(1)	16	19	23	26	29
	(2)	19	23	26	29	32
	(3)	23	26	29	32	35
Utilities		5.4	5.4	5.4	5.4	5.4
Materials and Containers 2/						
Year of operation	(1) 10.3 ---→					
	(2-5) 20.3 ---→					
Vehicles - rent, fuel, maintenance 2/						
Year of operation	(1) 4.7 ---→					
	(2-5) 10.0 ---→					
Maintenance (Bldg. and Equip.) 2/						
Year of operation	(1) 5.0 ---→					
	(2) 7.0 ---→					
	(3-5) 8.0 ---→					

1/ includes annual salary increments and increases in labor demand

2/ accounts for increased rate of operation per years (2-5)

TABLE 6

ASSEMBLY & GRADING STATION AVERAGE OPERATING EXPENSES

(US $ 000)

Oct 1981

(%funded by producer groups)	Year 1 0 %	Year 2 50%	Year 2 0%	Year 3 50%	Year 3 100%	Year 3 0%	Year 4 50%	Year 4 100%	Year 4 0%	Year 5 50%	Year 5 100%	Year 5 0%	TOTA
year started/year of operation	(1/1)	(1/2)	(2/1)	(2/2)	(1/3)	(3/1)	(3/2)	(2/3) (1/4)	(4/1)	(4/2)	(1/5) (2/4) (3/3)	(5/1)	(25)
number of stations in operation	3	3	7	7	3	5	5	10	5	5	15	5	
OPERATING EXPENSES													
utilities, telephone and miscellaneous	16	16	38	38	16	27	27	54	27	27	81	27	394
staffing & labor	48	69	133	182	87	115	145	320	130	160	525	145	2059
materials & containers	31	61	72	142	61	52	102	203	52	102	305	52	1235
maintenance bldg. & equipment	15	21	35	49	24	25	35	80	25	35	105	25	474
vehicle - hire, fuel & maintenance	14	30	33	70	30	24	50	100	24	50	150	24	599
gross operating expenses	124	197	311	481	218	243	359	757	258	374	1166	273	4761
less 1/ operating expenses paid by producer groups	0	98	0	240	218	0	180	757	0	187	1166	0	2846
cost to GOJ total	124	99 (410)	311	241	0 (484)	243	179	0 (437)	258	187	0 (460)	273	1915

1/ operating expenses paid by producer groups: year 1 = 0%; year 2 = 50%; year 3+ = 100%

3. Subterminal Wholesale Distribution Markets (SWDM)

In order to acheive efficiencies in distribution, assimilate a large volume of farm production, reduce post harvest losses, expand markets for locally produced food crops, and increase availability of graded agricultural products, four Subterminal Wholesale Distribution Markets are planned under the Project. Given the size of the island, its topography, and geographical distribution of production and retail centers, it has been determined that four such markets would provide the most efficient coverage. (See Map I).

a. Site Selection

Selection of sites for the Subterminal Wholesale Distribution Markets will be undertaken in cooperation with Parish Councils, the Ministry of Local Government, Town Planning, Ministry of Works, and other pertinent agencies. Criteria for selection of sites include:

- Patterns of product flow;
- Present and historical usage of area for markets;
- Adequacy of road network;
- Availability of utilities and services;
- Location with respect to sources of supply and retail markets;
- Overall civic development plans;
- Ease of access to main road(s); and
- Physical characteristics of soil and drainage.

Presently, four areas have been chosen as potential sites. They are: Maypen, Annotto Bay, Montego Bay and Santa Cruz. Prior to construction, sufficient utilization of the facility will have to be demonstrated. A condition precedent for authorization of construction expenditures will be letters of intent from wholesalers to lease a total of at least 50% of the floor space per building. It is presently estimated tha AMC, Grace Kennedy (a potentially large wholesaler of fresh produce), and other large firms will be able to rent approximately one-third to one-half of the space in each of the four markets. This is expected to increase significantly when the Marketing Division actively promotes the availability of space in the markets.

b. Market Layout

Two separate buildings or "blocks" situated on sites of approximately 15 acres are most appropriate to facilitate operational efficiency and prevent contamination of one type of product by another. Size of the blocks is based upon models recommended by FAO and USDA. The size of the site and layout of the various blocks, allows for future expansion.

Market design has followed closely the principles established by FAO technical studies. Experience of the U.S. Department of Agriculture in designing wholesale facilities has also been utilized. The market buildings or "blocks" are of an "open hall" type, which is considered to be appropriate for Jamaican conditions, considering cost, efficiency, and adequate display of produce. All four SWDMs will be similar in size, and will consist of a building for fruits and vegetables and one for fish and meat which will include general provisions (food grains, beans, lentils, etc.); a general administration block containing employee facilities; a gatehouse; a maintenance block; and a farmers' market.

JAMAICA - PARISH DIVISIONS

MAP I

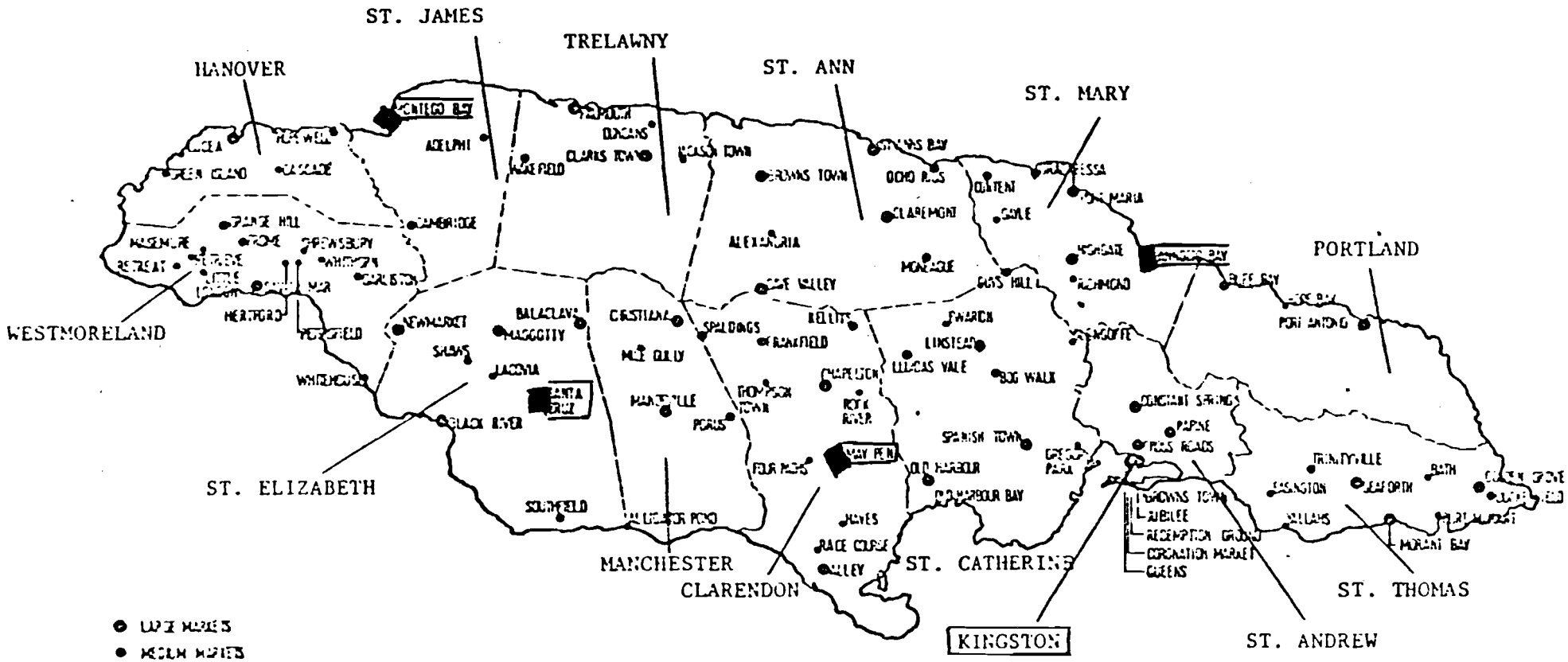

Proposed 4 sub-terminal
Wholesale Distribution Markets (SWDM)

BEST AVAILABLE COPY

The fruit and vegetable, and meat and fish market blocks will provide for display, temporary on-floor storage, sales area, and cold storage. The general provisions area will initially take up part of the meats block and provide display and sales area. In addition, it will serve as a longer term storage area for produce not requiring temperature or humidity control. A drying facility and storage bins for food grains, exterior to the blocks, will also be provided, plus 3 ten-ton "reefer" trucks at each SWDM.

A farmer's market will be included in each SWDM, with a covered sales area of 4,000 square feet, plus parking space. This will provide for 20 sales stalls where farmers or wholesale higglers may bring their produce to the market, park their trucks, wagons, or other type of conveyance, and sell directly to wholesalers and/or retailers from their vehicles.

The meat and fish, and fruit and vegetable cold storage units will be located in the center of the respective blocks. Produce can move directly into cold storage either from delivery trucks or from the market. Produce can also move directly out of storage into trucks for immediate delivery (sales out of storage) or into other sections of the market for display and sale.

A general administration block will provide offices and facilities for the management staff of the market, and facilities for the produce inspectors, and market monitors. Washrooms and changing rooms will be provided. The maintenance block will provide facilities for storing tools, and undertaking minor repairs on equipment and vehicles. General maintenance of all market equipment will be carried out by a general mechanic/maintenance man from the market. A standby generator and fuel tank will also be located at each facility, as will a separate gatehouse.

Access to the market will be limited to qualified wholesalers and retailers, and to farmers and small market intermediaries. Consumers will not be admitted. A system of control will be implemented to limit entry into the facility.

The four Subterminal Wholesale Distribution Markets will be constructed at a base cost of $7.1 million. Construction time is projected to be 18 months. Three markets will be operational by the end of year three, and all four in year four. Table 7 shows the construction cost estimates. Refer to Table 8 and Annex G for a list of required equipment and costs for each facility. The total base cost of equipment is estimated to be about $2.1 million. Equipment lists and blueprints will be finalized after site selection by MOA and the Agricultural Research Projects Unit of the Ministry of Public Works. Equipment includes storage bins, batch dryers, meat rails and hooks, backup generators, roller conveyors, carts, scales and fork lifts. Scheduling of construction and procurement is shown in Implementation Plan, Sec. IV-B.

Three ten-ton refrigerated trucks, one for meat and the other two for produce, will be provided to each of the four Subterminal Wholesale Distribution Markets to facilitate transport of perishables from one region to another. This will help wholesalers move produce to alleviate the chronic problem of surpluses in one area and shortages in another, and help the markets fulfill their assembly, concentration and distribution functions. The number of trucks to be provided (12), will be sufficient to demonstrate the benefits of refrigerated transport, and provide the capability to move a large volume of produce from one wholesale facility to another. Trucks of various sizes, but without refrigeration, are now utilized. The trucks will be rented to wholesalers or retailers by the management of the markets.

c. Management System

To manage the markets, a limited liability company will be established with the GOJ as the principal stockholder. The company will be under the

Table - 7

4 Subterminal Wholesale Distribution Markets (SWDM)

Estimated Construction Costs

($ US Rounded)

COMPONENT	DIMENSIONS	SQ. FOOTAGE	UNIT COST/SQ. FT.	TOTAL COST	AID/FX	GOJ/LC
1. Agr. Products Block	80' X 300'	24,000				
Fruit & Vegetable Market	80' X 200'	16,000	$ 10.20	$ 163,000		
2 Cold Storage Rooms	25' X 30' ea.	1,500	$ 100.00	$ 150,000		
General Provisions Market	40' X 50'	2,000	$ 10.20	$ 20,400		
Aisles & Misc. Space		4,500	$ 10.20	$ 45,900		
		24,000		379,500	$ 285,000	$ 94,500
2. Meat & Fish Block	80' X 300'	24,000				
Meat & Fish Market	80' X 225'	18,000	$ 10.20	$ 183,600		
2 Cold Storage Rooms	25' X 30' ea.	1,500	$ 100.00	$ 150,000		
Aisles & Misc. Space		4,500	$ 10.20	$ 45,900		
		24,000		$ 379,500	$ 285,000	$ 94,500
3. General Admin/Vendors' Offices & Toilets	30' X 40' X 2 Fl.	2,400	$ 33.75	$ 81,000	$ 60,750	$ 20,250
4. Farmers' Market Building	40' X 100'	4,000	$ 9.55	$ 38,200	$ 28,650	$ 9,550
5. Maintenance Shop Building	20' X 30'	600	$ 10.40	$ 6,240	--	$ 6,240
6. Guard's Gate House	8' X 6'	48	$ 11.25	$ 540	--	$ 540
TOTAL CONSTRUCTION COSTS		52,648	$ 29.16 AVG	$ 885,000	$ 659,400	$ 225,600
Site Development						
Grading	60,000	Sq. Yd.	$ 0.337	$ 20,220	--	$ 20,220
Fencing	2,650	L. Ft.	$ 18.00	$ 47,700	$ 35,775	$ 11,925
Storm Drainage System				$ 62,625	--	$ 62,625
Sanitary System				$ 32,360	--	$ 32,360
Plumbing				$ 31,275	--	$ 31,275
Electrical				$ 104,500	--	$ 104,500
Paving	34,200	Sq. Yd.	$ 10.75	$ 367,650	--	$ 367,650
Sub-Contracting Overhead (above 7 Items plus Cold Storage)			7.5%	$ 72,475	--	$ 72,475
Misc/Access.			10.0%	$ 88,500	--	$ 88,500
TOTAL SITE DEVELOPMENT COSTS				$ 827,300	$ 35,775	$ 791,500
Land Acquisition Costs	15 Acres		$ 3,373 AVG.	$ 50,600	--	$ 50,600
SINGLE UNIT COSTS				$1,762,900	$ 695,200	$1,067,700
COSTS OF 4 UNITS				$7,051,600	$2,780,800	$4,270,800
A & E Design & Supervision (All Units)				$ 262,678	--	$ 262,678
				$7,314,278	$2,780,800	$4,533,478
TOTAL COSTS OF 4 UNITS (ROUNDED)				$7,315,000	$2,781,000	$4,534,000

Drawing 2 A: Storm Drainage Plan, Subterminal Wholesale Market for Jamaica

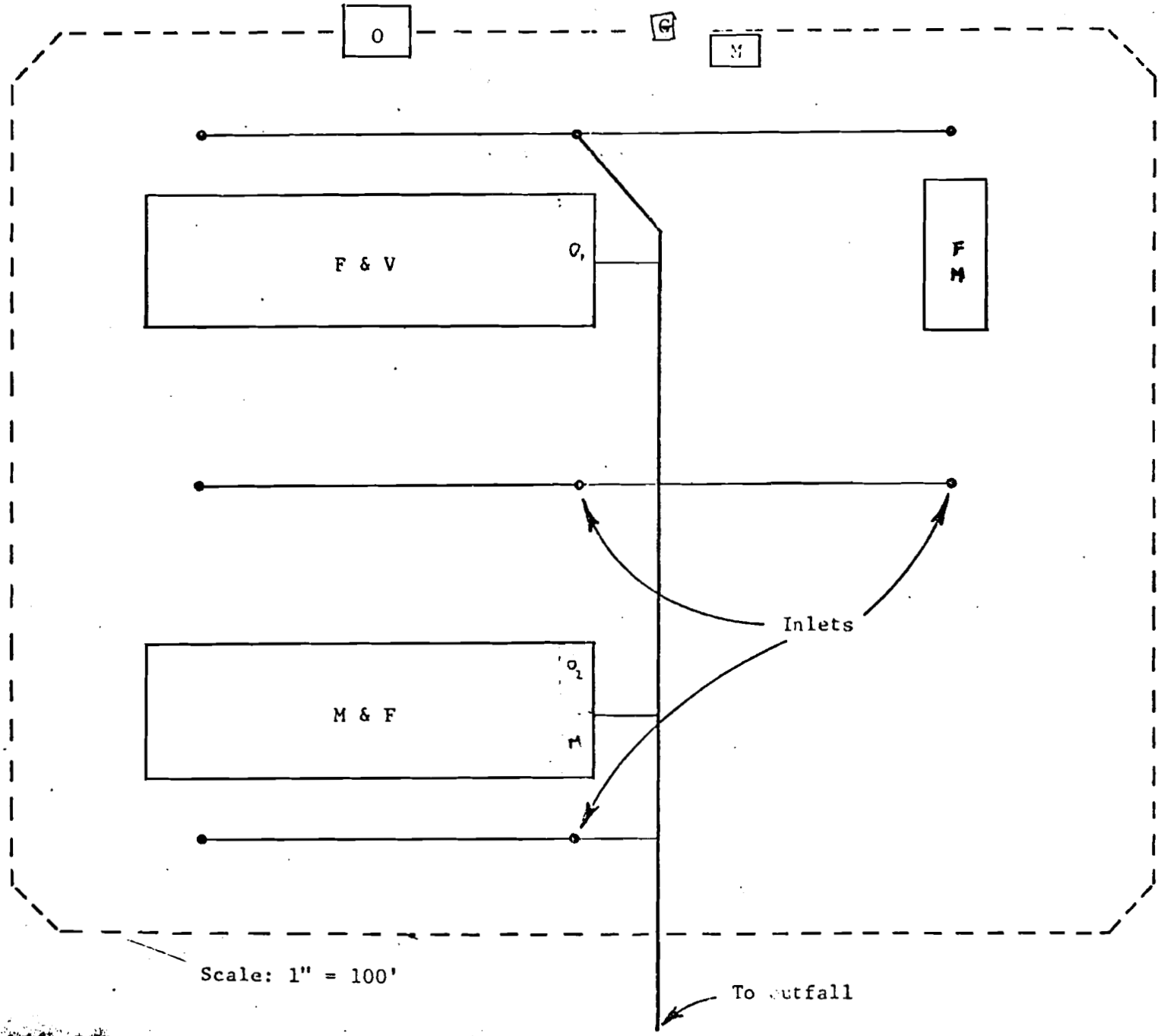

BEST AVAILABLE COPY

aegis of the Marketing Division of the MOA, but each market will have its own staff operating autonomously. The Board of Directors of the company will consist of two representatives from the MOA (one member, the Financial Officer of the Marketing Division, will serve as Corporate Secretary), the manager of each wholesale market, and five members from the agricultural and private sector.

The company will be responsible for hiring the General Manager of each market, and for reviewing the operations of the markets. The Corporate Secretary will consolidate the financial reports of the markets, reporting to the Board at periodic meetings. There will be no full time staff of the Board other than the Corporate Secretary, who will be a staff member of the Marketing Division.

Market fees will be assessed on the basis of square footage of market and storage space utilized. Fees will be based on the total annual operating costs and amortization of capital costs. (See the Financial Analysis Section for a more detailed discussion.) Truck rental charges will be based on the total cost of their operations, including amortization. Our estimates of the space rental fee and truck charge, based on project budgetary data, are $6868 per year for a 25' X 34' stall and $9.85 per hour of truck use. These are judged to be quite reasonable relative to such alternatives as are available at present.

Most of the equipment procured under the Project for SWDM operations will be sold to the wholesaler-occupants of the building. Such equipment includes storage bins, push carts, scales, batch dryer, and other miscellaneous equipment and tools. Although the amount of money involved is relatively small, at an estimated $113,000, per market in principle, these proceeds acquire special status. AID has therefore, added a covenant affecting the use of those proceeds, to which the Ministry has agreed. The covenant provides for MOA and USAID agreement of the use of these funds. See Sec. V-D. Some potential uses of these funds would be to a) replace worn out equipment, b) buy additional equipment if needed and c) expand existing SWDM facilities.

The management of the wholesale facilities and the wholesale distributors will require training in management and wholesaling. The management staff will be selected and hired in advance of completion of the facilities and provided with short-term external or in-country training. Wholesalers will be provided short-term in-country training and assistance by marketing extension specialists and technical advisors. The training will be provided through the Marketing Division in cooperation with the Training Division of the MOA.

Each market will require a minimum staff of 27, consisting of a general manager, an assistant manager, a storage manager, and assistant storage manager, an accountant/cashier, two clerks, a typist, a dispatch clerk (for vehicles) a mechanic/equipment maintenance man, two custodians, three general laborers, six drivers, three gatekeepers and three guards; one for each shift. (See Table 9 .) The market will operate approximately 24 hours each day, 7 days a week, depending on seasonal demands.

The total cost of the Subterminal Wholesale Distribution Markets over the life of the Project is $13.7 million. The allocation of these costs to the relevant categories is shown in Table 24, page 74.

Table - 8.

4 Sub-Terminal Wholesale Distribution Markets

Equipment Costs

($ US Rounded)

All Costs are Foreign Exchange Funded by AID

Item	Quantity	Total Equipment	Trucks
10 - Ton,"Reefer" Trucks	3 @ 50,000	--	150,000
10 - Ton,Storage Bins	10 @ 3,100	31,000	
Standby Generators (45kw)	1 @ 12,500	12,500	
Meat Rails & Hooks	1,000Ft. @ 56	56,000	
Batch Dryer (BU/HR)	1 @ 34,000	34,000	
Fork Lifts, Manual Push-Type	4 @ 2,500	10,000	
Push Carts	20 @ 350	7,000	
Platform Scales @ $450	20 @ 450	9,000	
Misc. Equipment & Tools for Offices, Maint, Etc.	1 Set	32,000	
		191,500	150,000
Spare parts @ 15%		28,725	22,500
		220,225	172,500
Shipping & Insurance @ 30%		66,068	51,750
COST PER UNIT		286,293	224,250
Costs for 4 SWDM		$1,145,172	$897,000

TOTAL EQUIPMENT AND TRUCKS FOR 4 SWDM $2,042,172

TABLE - 9

Subterminal Wholesale Distribution Markets Staffing Requirements and Costs 1/

(US $ 000)

Personnel	Total Number	Base Year per Market YEAR 1 Base Year		YEAR 2	YEAR 3 2/		YEAR 4		YEAR 5	TOTAL
		No.	$		No.	$	No.	$	$	$
Market Manager	(4)	1	7.2	--	(1.25)	9.00	7.8(4)	31.20	33.4	73.60
Assistant Manager	(4)	1	5.4	--	(1.25)	6.75	5.6(4)	22.40	24.2	53.35
Storage Manager	(4)	1	5.4	--	(1.25)	6.75	5.6(4)	22.40	24.2	53.35
Assistant Storage Manager	(4)	1	4.2	--	(1.25)	5.25	4.5(4)	18.00	19.4	42.65
Accountant	(4)	1	4.8	--	(1.25)	6.00	4.2(4)	16.80	18.0	40.80
Clerk	(8)	2	2.7	--	(2.50)	6.75	2.86(8)	22.90	24.7	54.35
Typist	(4)	1	3.0	--	(1.25)	3.75	3.2(4)	12.80	13.8	30.35
Dispatch Clerk	(4)	1	4.2	--	(1.25)	5.25	4.5(4)	18.00	19.4	42.65
Mechanical/Equipment Maintenance	(4)	1	6.0	--	(1.25)	7.50	6.3(4)	25.20	27.2	59.90
Custodian	(8)	2	1.5	--	(2.50)	3.75	1.6(8)	12.80	13.8	30.35
Laborers	(12)	3	1.4	--	(3.75)	5.25	1.5(12)	18.00	19.4	42.65
Drivers	(24)	6	4.0	--	(7.5)	30.0	4.3(24)	103.20	111.5	244.70
Gatekeeper	(12)	3	2.4	--	(3.75)	9.0	2.6(12)	31.20	33.4	73.60
Guards	(12)	3	2.4	--	(3.75)	9.0	2.6(12)	31.20	33.4	73.60
Total Salary						114.0		386.10	415.8	915.90
Fringe Benefits (15%)						17		58.00	62.2	137.00
Total Salary & Benefits	(108)	27	91.2		33.75	131	(108)	444.00	478.0	1053.00

1/ annual salary increments (X.08)

2/ 1.25 years of operation: 2 markets operational year 3 for 6 months; 1 operational for 3 months

4. Beneficiaries

Upgrading of the marketing system will produce positive benefits for small farmers, market intermediaries and consumers.

a) Small Farmers

With more efficient marketing, small farmers will be able to sell more produce and thereby increase their incomes. This increase in income will enable farmers to afford more factor inputs, such as fertilizer, pesticides, and tools. Increased income of small farmers will also result in better housing and nutrition.

As a result of the marketing extension activities of the Project, farmers will be able to improve their farming practices and produce for market requirements which will result in the production of larger quantities of higher quality produce and higher incomes.

Establishment of the Assembly and Grading Stations and the Subterminal Wholesale Distribution Markets will generate alternative employment opportunities for family members of small farmers as well as small market intermediaries. In addition, the revitalization of Jamaica's already established small agroindustries, for which this project is a necessary but not sufficient condition, will also contribute to the generation of alternative employment opportunities in rural areas.

b) Market Intermediaries

One of the problems identified by higglers is the large amount of time required to collect produce from individual farms. Establishment of the Subterminal Wholesale Distribution Markets and the Assembly and Grading Stations will enable higglers to obtain their produce more efficiently and in larger quantities. Higglers thereby will be able to sell larger quantities and reduce transportation costs allowing them to make greater profits.

Larger wholesalers will be able to rent space in the wholesale markets which will enable them to expand their operations.

c) Consumers

Consumer benefits from a more efficient marketing system will be in the form of a larger volume of better produce at reduced prices.

With better grading of produce, low income populations in urban centers will be able to obtain more food at lower prices resulting in improved nutrition, particularly among children. Upper and middle income populations will be able to purchase better quality, locally produced food. Availability of higher quality produce in-country will decrease the present need to import commodities to supply the hotel and restaurant trade.

5. Project Risks and Design Responses to Them

As with most development projects, this project contains elements of risk due to the setting in which the project is placed and to the novelty of the project vis-a-vis that setting. Many of the risks, but not all, are mentioned in various sections of this addendum and in the Phase I Project Paper, especially the Social Soundness Analysis (Sec IV-D of this Addendum).

The purpose of this section is to state briefly the risks this project runs and to discuss features of the project design to address these risks. The risks are presented, more or less, in order of their seriousness.

a. Wholesaler willingness to utilize SWDMs: This is important because of the relatively large amounts of money to be invested in the wholesale markets, and because relatively little hard information of this subject has been collected.

The MACD has been in contact with a number of private sector wholesalers, some of which were identified through the Urban Market Study being carried out by the Division. When asked if they would be interested in initiating or expanding their activities in the marketing of domestic food crops, several responded that they were "very, very interested (the largest has even done a special feasibility study) if they could obtain suitable premises in good locations". In addition, the Agricultural Marketing Corporation (AMC) is expected to utilize an important portion of space.

Nevertheless, no firm arrangements have yet been concluded between the Marketing Division and AMC or other wholesalers. The MACD points out, quite rightly we believe, that you have to have something solid, tangible or even visible to offer potential renters of SWDM space before they will spend much time analysing the proposal that they rent space, and that a considerable educational effort will have to be carried out with wholesalers before they become aware of the advantages of occupying the proposed SWDM space. The first steps in getting something "solid" to offer are to get financing lined up, sites identified and plans drawn. The MACD is fully aware of the risks that initially, there may not be sufficient firm wholesaler demand in the short run for the SWDM space currently planned for construction: that there will probably be some turnover of occupants, and that the locations proposed for construction may not serve the needs of all wholesalers equally well.

Because of these risks, the Ministry of Agriculture and the Mission, both want a formal condition precedent to the initiation of construction of each SWDM, that reinforces sound, prudent and responsible management. They have agreed on a condition precedent that requires: (a) before initiation of any construction at a SWDM site, the solid leases of at least 50 percent of the space in either major building (the fruit and vegetable building or the fish and meat building) must have been concluded, as evidenced by Letters of Intent signed between the Ministry of Agriculture and the wholesalers. Neither major building will be constructed at a site until it is individually at least half leased, that is, 100 percent leasing of one building a 20 percent leasing of the others will not permit the construction of both major buildings at the same site. Because construction for the major buildings will employ stringing together multiple modules each 25 feet in length, it will be comparatively simple to vary the length and therefore size of these buildings to meet the requirements at each site.

Prudent resource management will balance off two considerations in the implementation of the SWDM construction element of the project: first, the need to let as large a contract as possible for foundations, building components and erection (so as to get the lowest possible price overall); and second, when to make decisions regarding the exact size and number of major buildings at each site and in total.

The Mission and the MOA believe that these arrangements will preclude misallocation of project resources and reduce this risk to an acceptable level.

b. Sufficient producer groups: There is a long history in Jamaica of unsuccessful attempts to form producer associations more or less along cooperative lines. This has been due in part to the general experience of such groups not serving members best interests, but is also based on the traditional independence of small farmers in Jamaica. It is possible that the willingness of farmers to work in cooperation with other

farmers is just not strong enough or widespread enough within the drawing area of the AGS to permit the formation of enough groups to use project funds well. It is also possible that not enough farmers in an area will want to extend their activities into marketing.

In order to counteract the potential impact of such risks on the success of the AGS element of the project, the Ministry and AID have agreed that the areas of potential AGS sites will be the subject of special MOA/MACD studies to determine both the socio-cultural feasibility of promoting the establishment of producer organizations as well as the economic and financial feasibility of the proposed operation. These studies will also help identify unusual conditions in the area that may require special efforts to overcome, if they are negative, or special opportunities to build upon, if they are positive.

It is expected that already existing groups will be the first to receive MACD assistance and that this will help establish a good reputation among farmers in that community and elsewhere for the MACD's efforts to provide effective assistance in the establishment and nurturing of producer associations. The process of intensive examination of possible locations for AGSs, and the work to establish a solid organizational foundation before any decisions are made regarding the detailed design and construction of AGS facilities, is expected to go a long way towards ensuring that groups that do receive an AGS will, in fact, prove to be viable organizations, fully trained in how to maintain cooperative action, and in how to run a financially viable venture. If early associations have a good experience with their participation in the program, the participation of successive candidate areas should be easier to obtain.

The MACD and AID agree that this process, although slower than alternative ways of developing this element of the project, will be much more effective in the long run in ensuring a good use of resources, both under this and subsequent GOJ projects. This will not be an easy task -- but MACD personnel will be walking in with their eyes open to the problems that can be expected; they will be armed with practical methods of coping with these problems. Because of the long-run importance to the project and its objectives of building good local producer organizations, special organizational assistance will be provided to the MACD. Several sources of such assistance have been identified, as have sources of funding, including technical assistance funds already available under Phase I of this project.

In order to more effectively assure the success of these groups and avoid premature commitments of project resources, the MACD and the Mission have agreed to having a condition precedent to the utilization of funds for the construction of any AGS facility. This condition will require: (a) the completion of a socio-economic study of the proposed AGS areas and its potential participants which indicates potential feasibility; (b) the formation and formal constitution of the association; and, (c) an agreement with any presently existing producer association, in accordance with which the association will operate the facility, with MACD assistance initially and independently thereafter, leading to a sale or long-term lease.

c. The role of AMC in the project: The AMC is now moribund, for all intents and purposes, while the new GOJ/MOA administration studies what roles the AMC should fill and how the AMC should be restructured and function. At present the AMC is cutting back on its retail operations and

appears to be trying to lay the operational basis for significantly improving its financial self-sufficiency, reducing or even eliminating the central government subsidy it has required in the past. It has also greatly reduced its produce buying operations because it has lower than normal funding available for this activity. It is difficult to predict when other decisions will be made regarding AMC's future role and operations.

At the same time, however, it is clear that the project needs a strong AMC to work with, and through, if it is to achieve its objectives. AMC has been identified as a major potential renter in the SWDM's, perhaps the single largest user of space. The AMC's present cold storage facilities represent 70 percent of inventoried cold storage facilities island-wide, but are improperly located, hence only some of these facilities can be efficiently used.

The MACD will seek to assure the effective involvement of AMC in the Project through several means. First, the MACD has a strong representative on the board of the AMC (he is, in fact, the Director of the MACD) who has advocated just the kind of reorientation of AMC goals and operations that AMC has started to implement. The MACD continues to press on this front to help the AMC board realize that participation in this Project is in AMC's own interests, and necessary to carry out a restructuring of its operations. Second, the Ministry will also seek to reinforce this through Cabinet-level contacts with the Ministries of Industry and Commerce. No serious problems of either a policy or operational nature are expected. Third, once agreement is reached regarding AMC policy and its implementation, and the AMC formally agrees to participate in the Project, AMC officers and employees will receive extensive training in how better to carry out their individual and collective responsibilities in making the AMC an effective wholesale market actor. Provisions for funding this training are already included in Phase I of this project.

The MACD, therefore, believes, and the Mission agrees, that the Project design and planned MACD actions are sufficient to cope with the risk the present uncertainty implies regarding the AMC.

d. Small farmer benefits: The cornerstone of domestic food production in Jamaica is the small farmer. Since one of the major objectives of the project is to increase farmer incomes and the production of domestic crops, while reducing the economic cost of growing and distributing them, small farmers must participate in the process. They will participate if the incentives the Project offers are strong enough. The Project's principal incentive to the small farmer is of course the AGS and what they can do with it.

It is known (see the Social Soundness Analysis) that there is a strong tendency for political and socio-economic elites to control rural organizations for their own benefit. If this were to happen in the producer

associations, established with assistance under this Project, the small farmers will be effectively precluded from receiving a fair share of its benefits. The Project might still be a success in terms of reaching outputs or even some purpose achievement indicators, but it will have failed in its objective of substantially improving the efficiency of the marketing system as a whole.

Some of the Project's response to this have already been discussed in relation to the Project's ability to help form producer groups (part a. above). In addition, the MACD and its technical assistance advisors will have to take special care that each association's operations are conducted so as to assure that, for example, small farmers have equal access to credit funds, that product buying policies do not discriminate against small lots, and that factor inputs typically needed for small farm operations are as available as all other inputs the association may distribute. The amount of development planning and effort put in by the MACD before formal organization of the group may be the most important determinant of the small farmer's ability to participate and of the Project's ability to meet its larger aims.

e. Other areas of risk: Several comparatively lesser risks for the project are present in the background against which the project will operate. In summary, these could be stated as: (1) there is not enough consumer demand for differentiated or high quality products to justify farmers' investments in technologies to improve crop quality; (2) wholesale markets are not used to distribute enough domestic food crops to justify the investment; (3) adequate packaging materials cannot be provided in sufficient quantities or with needed regularity; and, finally (4) foreign exchange becomes so available that consumer demand shifts substantially away from domestically produced foods to preferred imported foods.

Each of these has been examined and found not to be substantial at present. Collectively, they are not seen as serious enough to not undertake the proposed investment. Several of them, however, are sufficiantly important to indicate that project implementors will have to follow their development over time and take measures to limit their impact. They also underscore the need for the consumer education programs (already contemplated) and the need for complementary credit to intermediaries at all levels, in accordance with GOJ policies.

Conclusion:

In conclusion, the development of an improved wholesale distribution network has been deemed a feasible approach for Jamaica by USAID Kingston, GOJ/MOA, and the USDA Technical Assistance Team.

The necessary policy and organizational framework exists; the needed personnel can be obtained and trained; the Sub-terminal Wholesale Distribution Markets and Assembly and Grading Stations are technically feasible; organizationally, the MOA can carry out the Project; and the USAID will be able to perform its Project management responsibilities.

IV. PROJECT ANALYSES

A. ENGINEERING ANALYSIS

1. Estimated Construction Costs *

The total Project cost of Phase II construction is estimated to be approximately $21.5 million US, computed at 1981 prices and including a 5% contingency factor and an inflation factor of 15% for all off-shore materials and services and 17% of local costs, compounded over the 5-year life-of-the Project. AID will finance approximately 42% of the costs by the proposed loan of $9.1 million. The GOJ's contribution will be $12.4 million or 58%.

Due to past high and widely varying inflation rates in various sectors of the economy in Jamaica, coupled with recent indications of a slow downward trend, a local cost inflation factor of 17% compounded was selected as a realistic and reasonable hedge against short-funding a construction project of this magnitude.

The total costs include such local cost items as land, site development and operating expenses plus the foreign exchange costs of U.S. source and origin of equipment, refrigerated trucks, stand-by generators and prefabricated steel module construction materials to build 25 Assembly and Grading Stations (AGS) island-wide and 4 Regional Subterminal Wholesale Distribution Markets (SWDM). Local construction estimates were made on a cost-per-square foot basis, received from the Ministry of Construction's special Agricultural Research Projects Unit (ARPU) and based upon their most recently signed contracts for construction and renovation of several IDB and World Bank funded Parish Markets throughout the island. The estimates also took into consideration the professional opinions of a DS/ST engineer and a USDA Market-Design consultant whose services the Mission requested and received in the 3rd & 4th quarters of FY 81. See Table 10, page 49A, this section.

Two types of construction and resulting costs were considered for the project buildings, local prestressed concrete and imported fabricated steel. It was professionally recommended, and the above cost estimates were based upon the use of pre-engineered steel components, pre-fabricated by U.S. building manufacturers and shipped to Jamaica ready for assembly and erection by construction firms, using U.S. sub-contractors for pre-fab modules and assembly supervision. The bases for this choice were:

(1) Lower estimated costs (by half)
(2) Demonstrated capability of meeting required hurricane and earthquake engineering specifications
(3) Compatibility of basic components with needed accessories
(4) Shorter time frames for procurement and construction
(5) The provision of experienced supervision by the manufacturer for on-site assembly and erection.

2. A & E Design and Supervision of Construction

A special group has been established in the Ministry of Construction (MOC) to contract with the MOA to provide necessary architectural and engineering (A & E) services for projects of this nature. This group is known as the Agricultural Research Projects Unit (ARPU), and is composed of architects, engineers and technicians who carry out design, surveys, preparation of contract documents, evaluation of bids, letting of contracts and supervision of construction. This unit has already made the final designs for the Assembly & Grading Stations and will make the final drawings for both the AGS and the SWDM, subject to an AID Engineer's review and approval.

---

* Also see Tables 23 and 24 at end of Financial Planning Analysis, p. 73 + 74.

BEST AVAILABLE COPY

TABLE 10

Detailed Total Project Costs

(25 AGS & 4 SWDM)
($US - Rounded)

			TOTALS	AID/FX	GOJ/LC
1. Land Acquisition					
AGS Land	127,500			--	127,500
SWDM Land	202,400			--	202,400
Total Land Acquisition			329,900		329,900
2. Construction					
AGS Construction	1,386,900			1,040,100	346,800
SWDM Construction	3,540,200			2,637,800	902,400
Total Construction			4,927,100	3,677,900	1,249,200
3. Site Development					
AGS Site Wk	983,100			--	983,100
SWDM Site Wk	3,309,200			143,200	3,166,000
Total Site Work			4,292,300	143,200	4,149,100
4. Equipment					
AGS Equipment	1,058,300			1,058,300	--
SWDM Equipment	1,145,172)	2,042,172		1,145,172	--
SWDM Reefer Trucks	897,000)			897,000	--
Total Equipment			3,100,472	3,100,472	
A. TOTAL CAPITAL COSTS			12,649,772	6,921,572	5,728,200
5. Net O/E Costs					
AGS Net O/E	1,915,000			--	1,915,000
SWDM Net O/E	687,000			--	687,000
B. TOTAL NET O/E			2,602,000	--	2,602,000
6. A&E Design & Supervision					
AGS	92,256			--	92,256
SWDM	262,678			--	262,678
C. TOTAL A&E COSTS			354,934	--	354,934
I. Total Base Costs: (A, B & C)			15,606,706	6,921,572	8,685,134
Contingency @5%					
AGS/FX	104,920			104,920	
SWDM/FX	241,159			241,159	
		346,079		346,079	
AGS/LC	173,235			--	173,235
SWDM/LC	261,024			--	261,024
		434,259			434,259
II. Total Contingency			780,338		
Inflation*					
AGS/FX	451,664			451,664	--
SWDM/FX	1,359,934			1,359,934	--
		1,811,598		1,811,598	--
AGS/LC	1,383,251			--	1,383,251
SWDM/LC	1,706,375			--	1,706,375
		3,089,626			3,089,626
III. Total Inflation			4,901,224		
			21,288,268	9,079,249	12,209,019
Total Project Costs (rounded) (I, II & III)			21,500,000	9,100,000	12,400,000
			100%	42.11%	57.89%

* @ 15% on FX and 17% on LC, Compounded.

BEST AVAILABLE COPY

The present staff of ARPU consists of 12 people including five professionals, five technicians plus two administrative support staff. ARPU was seconded to MOA in 1978 to satisfy the requirements of international lending agencies for a competent and independent staff to design and supervise agricultural construction projects for MOA. ARPU is presently engaged in various stages of design and contracting for construction of several other agricultural construction projects funded by IDB and the World Bank.

ARPU is supported by the MOC, with additional staff available either directly from MOC or through service contracts, as required. For example, a qualified Clerk of Works is expected to be provided from the MOC staff to supervise the construction of each major market. Quantity surveyors (QS) are also used and available.

A review by an AID/W engineer of previously prepared contract documents, including plans and specifications, indicates this group is capable of designing the proposed Phase II Project facilities. There should be no problems in the supervision of construction provided the proper staff is added to the ARPU. The MOA is well aware of the staffing level required for this task, and provision, therefore, is included in overall Project staffing requirements. See ARPU Organizational Chart below.

Besides the capability and responsibility for the design of A & E plans, specifications and cost estimates, ARPU also performs the following functions:

1. Performs topographic/engineering site surveys and soil tests
2. Selection of Quantity Surveyor consultants
3. Recommendation of pre-classified local contractor lists
4. Preparation and evaluation of contractors' pre-qualification questionnaires
5. Preparation of local and international Bid/Tender Advertisements
6. Preparation and evaluation of Invitations for Bids (IFB)/Tenders
7. Conducts pre-bid conferences and Bid/Tender Evaluations
8. Recommends contract awards
9. Recommends contract Mobilization Advances
10. Supervises contractors' performances
11. Makes contract "change orders" (with AID approvals) if/when necessary
12. Certifies progress payments for AID approval and payment
13. Participates in periodic and final inspections and certifications of acceptance of completed facilities, jointly with MOA and AID.

3. Engineering Criteria and Specifications

There are two basic GOJ design criteria for the design of structures. All buildings are designed to withstand hurricanes having a wind velocity of 120 mph and to withstand earthquakes in accordance with the lateral load requirements of the SEAOC Code of Southern California. GOJ rules and regulations and FAO Guidelines cover criteria for site selection in terms of waste disposal and will be mentioned briefly below under environmental considerations.

Specifications used by the GOJ are based on British Standard Specifications (BSS) adapted nationally by MOC and locally by the Ministry of Local Government (MLG). During site investigations, for example, soil samples and tests are performed for the design of foundations. The MLG provides specifications concerning conditions unique to a given area. Specifications are contained in the Conditions of Contract.

The principal structures for both the AGS and the SWDM will be of a relatively simple 'open-hall' design, being low-profiled, clear span buildings of modular units assembled on concrete slabs. The AGS will be of two dimensions, 34' x 60'

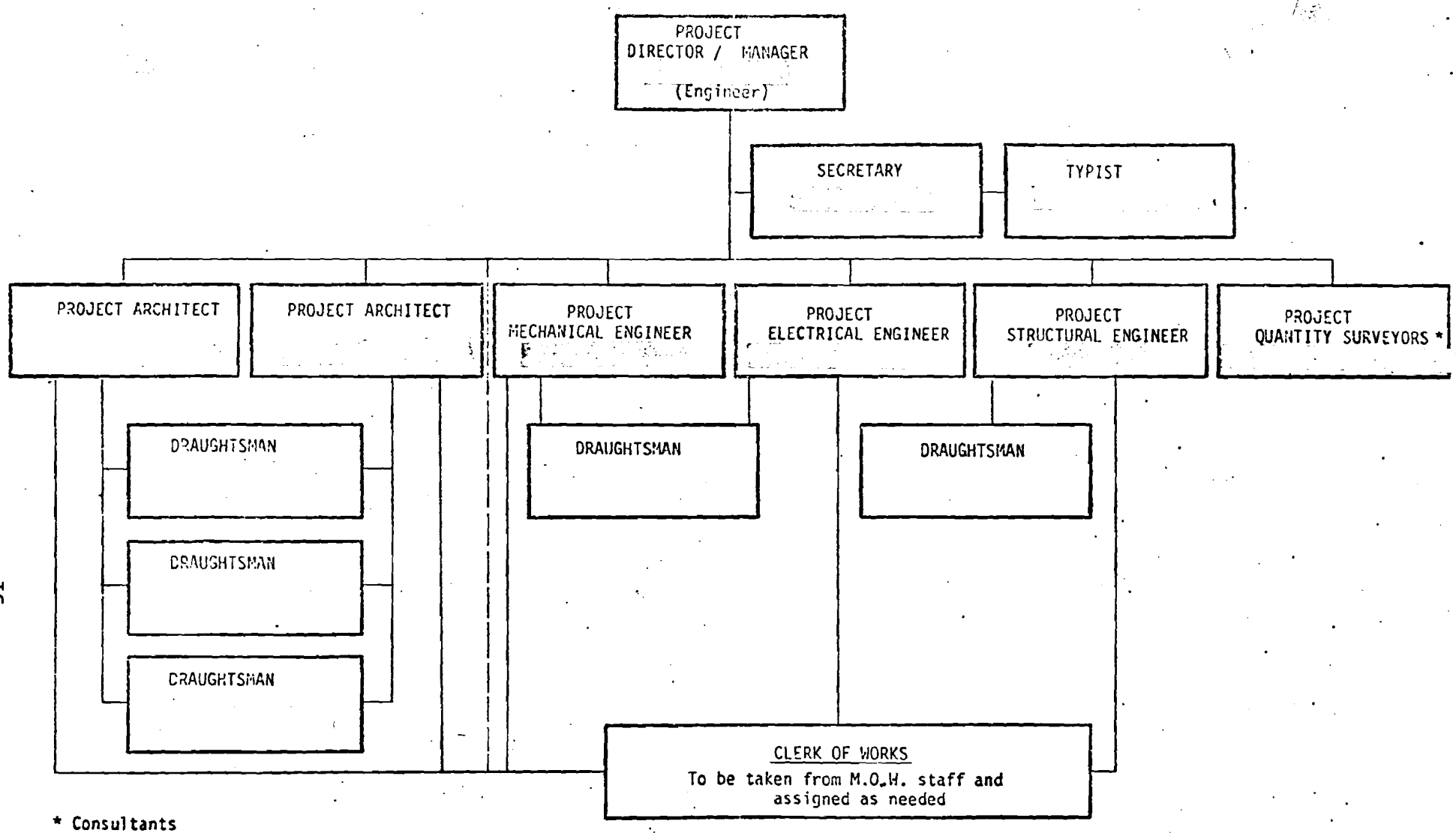

* Consultants

A.R.P. Unit Staff Structure

ARP 19.9.80.

(19 units) and the larger model, 34' x 80' (6 units) each situated on approximately 2 acres of land. Each of the 4 SWDM units will consist of 6 structures on a minimum of 15 acres of land.

4. Site Selections

The MACD has decided to locate the four Sub-terminal Wholesale Distribution Markets (SWDM) in the following areas:

a. Annotto Bay - North Region
b. Santa Cruz - Central Region
c. Montego Bay - Western Region
d. May Pen - Southern Region

The criteria for the selection of the exact site locations within these areas will be:

- Patterns of product flow
- Present and historical usage of area for markets
- Adequacy of road network
- Availability of utilities and services
- Location with respect to sources of supply and retail markets
- Overall civic development plans
- Ease of access to main roads
- Physical characteristics of the soil and drainage (not prime cultivated land)
- Area should be flat and level to the access road to the site
- The site should not be on fill, but on soid hard clay ground.

The MACD proposed to build the first SWDM in the May Pen area and has chosen a site. It is estimated to take 6 months after actual site acquisition to begin construction, which will then take 18 months to complete each SWDM. The Project's Financial Plan is based upon starting construction of all 4 SWDM in project year 2 and completing them by the end of year 3 (Sept. 1984). Placement of equipment orders should be completed in each SWDM's 12th month of construction to allow 6 months for delivery to coincide in each completion of construction. Note that a foreign exchange provision has been made in the costing of the chain-link fencing sub-contract, anticipating a substantial cost savings if the materials are imported duty-free for the sub-contractor. All construction activities involving off-shore procurement have been estimated at a ratio of 75:25 for off-shore and local costs components.

Selection of the AGS sites will also be done according to specific criteria and on a case by case basis, after detailed socio-economic surveys have been conducted and analyzed by the MOA's Marketing Division. The first 3 sites to be surveyed for construction will be:

Wait-A-Bit in Trelawny Parish;
Old Harbour in St Catherine Parish; and
Bull Savannah in St Elizabeth Parish.

These sites will then undergo topographic/engineering surveys and soil testing by ARPU who will then prepare final design blueprints, bills of quantities and IFB/Contract documents.

Twenty-five additional AGS sites have been identified and are set forth in Annex H. Construction could start 5.5 months after acquisition of each AGS site. Construction time for each AGS is estimated at 3 months. The MACD proposes to start construction on 10 AGS' in project year 1 with 3 in full operation by the end of year 1 (30 Sept. 82), 7 more operational by the end of year 2 (30 Sept. 83), 5 more in each of year 3, 4 and 5 for the total of 25, by 30 Sept. 86. Equipment for each AGS must be placed 3-4 months prior to estimated completion of construction or at start of construction at the latest.

5. Contracting Procedures

All contracting for services, equipment, commodities, as well as for construction will be by host-country contracts, following AID policy and guidelines and in some instances, with AID approvals and assistance. This has proved to be a workable arrangement in other on-going AID/GOJ projects, as well as currently being done implementing Phase I of this Project. All contracts will be let on a competitive basis. Bids from local and U.S. firms will be invited for any construction contract exceeding estimated $500,000 US.

6. Equipment and Commodities

Detailed quantities and specifications for the varieties of equipment necessary to make the AGS and SWDM functional will be developed by the MACD with the advice of the Phase I Technical Assistance advisors presently in country. The specific mix, capacities and dimensions of the equipment for each facility will be determined by the types and projected volume of produce to be handled at each facility. (From this point on, the procedures are the same for both the AGS and the SWDM). Notices concerning invitaitons for Bids/ Tenders (IFB) will then be published in local newspapers as well as in the Commerce Business Daily in the U.S. Bids/Tenders will then be evaluated by the ARPU/MOA who will recommend a contract award to the lowest responsive, responsible bidder and request MACD and AID approvals.

By the size and type of the equipment needed, and the use of pre-fab steel construction modules, it is expected that a U.S. firm is likely to be selected, requiring foreign exchange payment in U.S. dollars. This will be accomplished by means of a Direct Letter of Commitment, issued by AID to the successful U.S. supplier/contractor. Because some of the equipment requires considerable lead-time for delivery (1-6 months), careful considerations of timing the placement of orders must be coordinated with the expected construction completion dates of each facility to be equipped. All goods and services shall have their source and origin in Jamaica or AID Geographic Code 941 countries. All ocean shipping and vehicles shall be U.S. unless waived in writing by AID.

7. Construction

Following AID/W approval of this Project, the actual start of construction on either the AGS or the SWDM will be dependent upon the MACD's expeditious completion of the following critical actions:

a) Completion of socio-economic surveys for each AGS site

b) Actual acquisition of the land for each AGS

At that point, ARPU completes its many functions including its final design drawings and IFB/contract documents, and its other functions mentioned in A 2 above.

The Governement of Jamaica uses a Bill of Quantities type contract for this type of construction. The procedures are as follows: when design drawings have been completed, a Bill of Quantities or list of materials, is written by a

BEST AVAILABLE COPY

Quantity Surveyor (QS)/Contractor. A document is then prepared which contains Conditions of Contract, Bills of Quantities and Specifications. This document, along with the design plans, constitutes the construction contract documents for tendering bids for construction.

A Clerk of Works is appointed to supervise the construction contractor. When an item of work has been completed, the Quantity Surveyor is brought in to measure the actual quantity of work completed. Payment is then based on these quantities at the rates established in the accepted tender/contract. Variations are provided for in the contract and paid for from contingency amounts, if necessary. This method of construction contracting is widely used in Britain as well as Jamaica and to a limited extent in the United States. Qualified Quantity Surveyors are chartered or registered, as are architects and engineers, and are considered as professional staff.

A Clerk of Works will be a professional staff member or a technician depending on the nature and scope of the work. For example, in relation to the Sub-terminal Wholesale Distribution Markets, the Clerk of Works will be equivalent to a resident engineer.

8. Local Construction Contractors

The Ministry of Works pre-classifies local contractors as "A", "B" and "C" according to each company's resources and capabilities. Each grade is further classified into specialities, such as buildings or civil works. Grade "A" contractors are considered capable of carrying out work in excess of $281,000 (J$500,000). There are over 30 Grade "A" contractors presently operating in Jamaica. Many of the Grade "A" firms are considered by ARPU to be capable of constructing the Markets under the proposed Project.

Skilled construction craftsmen are available in sufficient number for the construction of the proposed Markets. Wages are considered relatively high and comprise as much as 35 percent of the cost of construction. Wages are controlled by the Joint Industrial Council. Although labor struggle is endemic to Jamaica, allowance therefore has been made in scheduling and cost estimating. Needless to say, the entire GOJ will cooperate in seeking to minimize labor problems affecting Project implementation.

B. ECONOMIC ANALYSIS

1. Introduction

The Agricultural Marketing Development Project is an integral part of the set of activities which will have to be implemented in order to remove or reduce the number of constraints which in combination serve to retard the growth of the Jamaican agricultural sector.

The effects of the existing inadequate marketing system on the agricultural sector are far-reaching. Prevailing estimates suggest that post-harvest losses of agricultural output range between 30 and 40 percent of total production; and due to the inefficient handling of produce within the marketing system, distribution costs are currently estimated at 68 percent of the farm-gate value of goods marketed. For the more perishable items, distribution costs could be as high as 75 percent of their farm-gate value. As a result of the lack of wide-spread dissemination of marketing information and extension services, the farming sector generally faces difficulties in disposing of its output. Along with the other defects within the agricultural sector, the existing inadequate system for the marketing of agricultural products, serves as a disincentive to agricultural production.

2. The Project

The Agricultural Marketing Project consists of two phases and three components.

Phase I, currently being implemented, will establish the institutional capacity of the GOJ to bring about desired changes in the existing marketing system through the establishment of a Marketing and Credit Division as a separate unit within the Ministry of Agriculture. The Marketing Division will undertake marketing development, marketing extension, research, market information and quality assurance activities.

Phase II of the Project, presently being proposed, involves the construction and operation of 25 Assembly and Grading Stations (AGSs) and 4 Sub-terminal Wholesale Distribution Markets (SWDMs). The establishment of the AGSs and SWDMs will serve to bring about improvements in the efficiency with which agricultural products are marketed and distributed. The various participants in the marketing and distribution system will enjoy both private and public benefits. Farmers will receive a larger portion of the retail price of their products due to their involvement in marketing of products at later stages of distribution. Wholesalers and retailers will have a ready source of supply of commodities which have been properly graded and packaged for the market. The consumer will benefit as a result of the increased competition, in both quality and price which are expected to result from a better planned and efficiently operating marketing system.

3. Project Benefits

The project is expected to result in the generation of three main types of benefits, (a) reduced post-harvest losses; (b) increased agricultural production;

and (c) reduced distribution costs.

It is expected that by the eighth year of the project, post-harvest losses will have been reduced from the currently estimated 35 percent (average of the range 30-40 percent) of the value of the marketed production, to 25 percent.

The overall improvement in the marketing system which the project promises is expected to bring about a reduction in distribution costs from 68 percent of the farm-gate value of products to 60 percent by the seventh year of the project.

The project's impact on the output of agricultural products is expected to be a raising of agricultural production by 5 percent (net) over what it would otherwise have been in the absence of the project.

It is also expected that the project will result in an increase in the portion of total agricultural production which is marketed. In fact there are very good reasons to believe that the initial effect of the project will be to increase the proportion of total production which is marketed rather than bring about an immediate increase in production. However, it is felt that the latter effect will dominate after the initial years of the project and so for the purposes of this analysis is chosen as the third area of benefit.

a) Projection of Benefits

The approach to the estimation of project benefits which is adopted in this analysis is dictated by the nature of the project activity/output relationship. Benefits are estimated for the project as a whole as opposed to looking at the benefits of each of the three components separately. The components of the project are highly interdependent in terms of their overall benefit generating capacity. While both the AGSs and the SWDMs are expected to generate direct benefits (and the financial analysis has indicated their individual financial viability), it is expected that it will be the combined indirect effects of the AGS, SWDM and the Marketing Division of the Ministry of Agriculture which will generate the bulk of the project's economic benefits. At the same time it is almost impossible to measure separately the indirect benefits of each component of the project. Therefore, on the basis of assumptions contained in Table 11 about the magnitude of the likely effect which the project will have on the problems which it is designed to address, expected project benefits are determined.

There is not much lost in adopting this aggregated approach since the cost effectiveness information which would have resulted from analysing each component separately would have been of very limited use. Given the potentially high catalytic effect of the Marketing Division in the benefit generating process in this project, the cost effectiveness information would most likely suggest a re-allocation of project resources from other components which would not result in a viable marketing system.

Project benefits are calculated on the basis of Table 12 which shows a projection of the value of production of affected food crops and meat categories, over the 15 year analysis period.

The projected value of production is expressed in constant 1981 farm-gate prices. The projections of physical output were derived by using an average of output over the last three years, projected to grow at 2 percent per annum for the first three years of the project and at 3 percent for the remainder of the analysis period.

Project benefits for each year are based on the expected marketed portion of the projected output (estimated to be 75 percent) and the assumptions embodied in Table 11 the latter based on expectations of the rate of implementation of the overall benefit generating capacity of the project.

TABLE 11

ASSUMPTIONS USED IN PROJECTION OF PROJECT BENEFITS

Year	Post Harvest Losses		Production	Distribution Costs	
	% of total Marketed Production	% Cumulative Reduction	% Increase In Production	% of Farm Gate value of marketed Production	% Cumulative Reduction
1981	35	-	-	68	-
1982	35	-	-	68	-
1983	35	-	-	68	-
1984	34	1	-	68	-
1985	32	3	-	65	3
1986	29	6	-	62	6
1987	27	8	3	60	8
1988	25	10	4	60	8
1989	25	10	5	60	8
1990	25	10	5	60	8
1991	25	10	5	60	8
1992	25	10	5	60	8
1993	25	10	5	60	8
1994	25	10	5	60	8
1995	25	10	5	60	8

Table 12

PROJECTION OF PRODUCTION OF MAJOR CROPS AFFECTED BY PROJECT (000 CONSTANT 1981 US$)

Short Tons	Farm gate unit price US$	1981	1982	1983	1984	1985	1986	1987	1988	1989	1990	1991	1992	1993	1994	1995
Legumes	2,483.14	31,054	31,675	32,309	33,278	34,276	35,305	36,364	37,455	38,578	39,736	40,928	42,156	43,421	44,723	46,065
Vegetables	572.15	67,563	68,914	70,293	72,401	74,574	76,811	79,115	81,489	83,933	86,451	89,045	91,716	94,468	97,302	100,221
Condiments	1,263.48	14,689	14,983	15,283	15,741	16,213	16,700	17,201	17,717	18,248	18,796	19,360	19,940	20,539	21,155	21,789
Fruits	483.20	4,613	4,705	4,799	4,943	5,042	5,193	5,349	5,509	5,675	5,845	6,020	6,201	6,387	6,578	6,776
Plantains	224.72	7,220	7,364	7,512	7,737	7,969	8,208	8,372	8,624	8,882	9,149	9,423	9,706	9,997	10,297	10,606
Potatoes (Irish)	932.58	10,979	11,199	11,423	11,766	12,118	12,482	12,856	13,242	13,639	14,049	14,470	14,904	15,351	15,812	16,286
Potatoes (Sweet	415.73	11,873	12,111	12,353	12,724	13,105	13,498	13,905	14,320	14,750	15,193	15,648	16,118	16,601	17,099	17,613
Yams	480.90	81,798	83,434	85,102	87,655	90,285	92,994	95,783	98,657	101,617	104,665	107,805	111,039	114,370	117,802	121,336
Other Tubers	263.48	18,998	19,378	19,766	20,359	20,969	21,599	22,242	22,914	23,601	24,309	25,039	25,790	26,564	27,350	28,181
Fish	3,370.78	56,848	57,985	59,145	60,919	62,747	64,629	66,568	68,565	70,622	72,741	74,923	77,171	79,486	81,870	84,326
Beef	2,808.98	34,623	35,316	36,022	37,103	38,216	39,363	40,543	41,760	43,012	44,303	45,632	47,001	48,411	49,863	51,359
Pork	2,247.19	17,852	18,209	18,573	19,130	19,704	20,295	20,904	21,531	22,177	22,843	23,528	24,234	24,961	25,710	26,481
Goat	3,370.78	1,237	1,262	1,287	1,326	1,365	1,406	1,449	1,492	1,537	1,583	1,630	1,679	1,730	1,782	1,835
Poultry	1,853.93	31,502	32,132	32,775	33,758	34,771	35,814	36,888	37,995	39,135	40,309	41,518	42,763	44,046	45,368	46,729
Eggs (Doz.s)	1.57	4,373	4,460	4,550	4,686	4,825	4,970	5,119	5,273	5,431	5,594	5,762	5,935	6,113	6,296	6,485
TOTAL US (000)	-	395,222	403,127	411,192	423,525	436,179	449,267	462,661	476,543	490,837	505,566	520,731	536,352	552,445	569,017	586,08

BEST AVAILABLE COPY

b) Gross Project Benefits

The gross benefits of the project are shown in Table 13. Column 1 of this table shows the projected value of agricultural production affected by the project; adjusted from Table 12 to make allowance for the fact that only about 1/4 of the total distribution of meat and eggs will be affected by the project. Particularly in the case of poultry and eggs, distribution takes place within a vertically integrated industry. Column 1 is also reduced by 25 percent (to form Column 2) to allow for that portion of total production which does not enter the commercial distribution system but is either consumed on the farm, retained for local distribution, planting material or left to rot in the field.

The remaining columns of Table 12 show the estimate benefits from reduced post-harvest losses, increased production and reduced distribution costs.

c) Foreign Exchange Impact of Benefits

In Table 14 the foreign exchange impact of the benefits are estimated. It is estimated that only the benefits pertaining to reduced post-harvest losses and increased production will have significant and measurable foreign exchange impact. These two areas of benefits are expected to result in significant substitution of domestically produced food for imported food. It is thought that as much as 50 percent of the value of the increased food availability (as a result of the project) will be substituted for imported food. In Table 14 therefore, the foreign exchange impact of the combined yearly benefits from reduced post-harvest losses and increased production is estimated at 50 percent of this total.

The discounted value (at 11.0% per annum) of projected foreign exchange savings (not shadow priced) over the analysis period is US$86.2M (constant 1981 prices).

4. Project Costs

The start-up and operating costs of the **Project** are summarised and appropriately adjusted from the Technical and Financial analysis sections of this project paper addendum. The **Project** start-up costs are shown in Table 15 and operating costs in Table 16. All cost estimates exclude allowances for depreciation and inflation continency but include physical contingency allowances.

Start-up costs relating to Phase 1 of the project and originally expressed in constant 1978 US$ have been converted to constant 1981 US dollars by applying a 10 percent compound factor over the three year period. The categories of costs so affected are vehicles (not refrigerated trucks), technical assistance, training, training materials, etc.

The cost of operating the Marketing Division of the Ministry of Agriculture (Phase 1 costs) was also transformed to constant 1981 US dollars by applying the factor $(1-1)^3$. Operating costs are projected to grow in real terms by 5 percent per annum after year seven of the project. Operating costs of AGS and SWDM are gross costs as operating expenses have not been subtracted. In years 9 and 13 of the project, US$0.63 million have been added for replacement of 12 refrigerated trucks acquired during the start-up phase and assumed to have useful lives of 5 years. Other equipment acquired by the project are assumed to have useful life covering the duration of the analysis period.

Buildings are assumed to have a useful life of 20 years, with a residual value of US$1.913 million at the end of the analysis period. This amount is added to the benefit stream in 1995.

5. Benefit/Cost Analysis

Table 17 shows the total costs and benefits of the project. The foreign exchange component of costs and benefits have been shadow priced at a premium of 12 percent (US$1 = J$2.00) to reflect the relative scarcity of foreign exchange in the

Table 13

ESTIMATION OF GROSS BENEFITS
(000 CONSTANT 1981 US$)

	Total Projected Production*	Total Projected Production to be marketed	Reduced Post Harvest Losses	Increase in Production	Reduction in Distribution Cost	Total Benefits
1981	285,396	214,047	-	-	-	-
1982	291,104	218,328	-	-	-	-
1983	296,929	222,697	-	-	-	-
1984	305,834	229,376	2,294	-	-	2,294
1985	314,957	236,218	7,087	-	7,087	14,174
1986	324,409	243,307	14,598	-	14,598	29,196
1987	334,057	250,543	20,043	7,516	20,043	47,602
1988	344,080	258,060	25,806	10,322	20,048	57,076
1989	354,400	265,800	26,580	13,290	21,264	61,134
1990	365,037	273,778	27,378	13,689	21,902	62,969
1991	375,986	281,990	28,199	14,100	22,560	64,859
1992	387,266	290,450	29,045	14,523	23,236	66,804
1993	398,886	299,165	29,917	14,958	23,933	68,808
1994	410,852	308,139	30,814	15,407	24,651	70,872
1995	423,177	317,383	31,738	15,869	25,391	72,998

TABLE 14

FOREIGN EXCHANGE IMPACT OF GROSS BENEFITS

(000 Constant 1981 US$)

Year	Reduced Post-harvest Losses	Increased Production	Total Foreign Exchange Impact
1981	-	-	-
1982	-	-	-
1983	-	-	-
1984	1,147	-	1,147
1985	3,544	-	3,544
1986	7,299	-	7,299
1987	10,022	3,758	13,780
1988	12,903	5,161	18,064
1989	13,290	6,645	19,935
1990	13,689	6,844	20,533
1991	14,099	7,050	21,149
1992	14,523	7,262	21,785
1993	14,959	7,479	22,438
1994	15,407	7,704	23,111
1995	15,869	7,935	23,804

TABLE 15

Phase II Start-Up Costs

(000 Constant 1981 US $)

Year	Construction Land Acquisition Site Site Development Equipment	Vehicles & Refrigerated Trucks	Technical Assistance	Training, Training Supplies, & Miscellaneous Equipment	Total
1981	-	69	922	64	1055
1982	1060	76	906	254	2296
1983	3885	-	984	295	5164
1984	6599	942	897	77	8515
1985	410	-	716	20	1146
1986	300	-	-	-	300

TABLE 16
Project Operating Costs
(000 Constant 1981 US $)

Year	Marketing Division (M. O. A.)	Subterminal Wholesale Distribution Markets	Assembly and Grading Stations	Total
1981	449	-	-	449
1982	808	-	130	938
1983	847	-	530	1377
1984	872	206	975	2053
1985	896	690	1418	3004
1986	941	741	1868	3550
1987	988	778	2091	3857
1988	1037	817	2189	4043
1989	1089	858 + 630 1/	2292	4868
1990	1143	901	2400	4444
1991	1200	946	2514	4660
1992	1261	993	2633	4887
1993	1323	1043 + 630 2/	2758	5754
1994	1389	1095	2890	5374
1995	1459	1149	3028	5636

1/ & 2/ Replacement of refrigerated trucks

Jamaican economy. Foreign costs and benefits are shadow priced at this rate for the first 9 years of the life of the project. The premium is thereafter reduced by 3 percentage points each year until eliminated; in anticipation of an improved foreign exchange situation in the latter years of the project.

The unskilled labor component of construction costs were not shadow priced due to the unavailability of such disaggregated data in the construction cost estimates. This will not seriously affect the analysis since the pre-fabricated modular steel construction method which is proposed will have only a relatively small unskilled labor component.

Economic costs and benefits were discounted at the rate of 11.0 percent per annum.

The result of the calculations presented indicates that the Agricultural Marketing Development Project is an extremely viable investment in economic terms. The present value of net benefits is US$235.8M, the B/C ratio is 6.0 and the internal rate of return[1] is 72.0 percent.

6. Sensitivity Analysis

The results presented above indicate forcefully that this project is an extremely desirable investment, economically. In order to be able to place some confidence in these results, this sensitivity analysis will use varying combinations of assumptions about the behaviour of benefits and costs.

It is essential that a fairly extensive sensitivity analysis be carried out since the assumptions used in the derivation of the project benefits are based essentially on the impressions and experience of Ministry of Agriculture personnel, rather than on any rigorously determined relationship between the planned project activity and expected benefits.

This analysis will therefore concentrate on testing the sensitivity of the project viability to changes in project costs, value of projected output and assumptions listed in Table 11.

Six sensitivity tests have been carried out using what are considered to be extreme variations in the factors assumed to be the determinants of project benefits. (See details in Annex I)

a) Regime I

Both capital and operating costs are increased by 20 percent, benefits held constant.

The result of this test (see Table 1, Annex I) is a reduction in the B/C ratio from 6 to 5 and the IRR reduced to 64 percent from 72 percent.

b) Regime II

Project capital and operating costs are increased by 20 percent and project benefits decreased by 30 percent.

The result of this test (see Table II, Annex I) is a reduction in the B/C ratio from 6 to 3.5 and the IRR has been reduced from 72.0 percent to 36.6 percent.

c) Regime III

Project capital costs and operating costs are increased by 20 percent and the cumulative percentage reduction in post-harvest losses reduced to 3 percent, cumulative increase in production reduced to 2 percent and the cumulative reduction in distribution costs reduced to 3 percent. (See Table 11 for initial figures)

The result of this test (see Table III, Annex I) is a reduction in the B/C ratio from 6 to 1.84 and a reduction of the IRR from 72.0 percent to 31.0 percent.

---

1. The rate of discount required to reduce the net present value of project benefits to zero, i.e. reduce the B/C ratio to unity.

TABLE 17

Benefit/Cost Calculation:

(000 Constant 1981 US$)

Year	Total Costs	Foreign Exchange Component	Shadow Value	Economic Costs	Present Value of Economic Costs	Total Benefits	Foreign Exchange Component	Shadow Value	Economic Benefits	Present Value of Economic Benefits	Net Undiscounted Project Benefits
1981	1504	1055	1182	1631	1631	--	--	--	--	--	(1631)
1982	3234	1956	2191	3469	3125	--	--	--	--	--	(3469)
1983	6541	3037	3401	6905	5604	--	--	--	--	--	(6905)
1984	10,568	5295	5930	11,203	8192	2294	1147	1285	2432	1778	(8771)
1985	4150	994	1113	4269	2812	14,174	3544	3969	14,599	9617	10,330
1986	3850	149	167	3868	2295	29,196	7299	8175	30,072	17,846	26,304
1987	3857	--	--	3857	2062	47,602	13,780	15,434	49,256	26,334	45,299
1988	4043	--	--	4043	1947	56,773	18,604	20,836	59,005	28,420	54,962
1989	4868	630 1/	688	4927	2138	61,134	19,935	21,729	62,928	27,306	58,001
1990	4444	--	--	4444	1737	62,969	20,533	21,765	64,201	25,098	59,757
1991	4660	--	--	4660	1641	64,859	21,149	21,783	65,493	23,066	60,833
1992	4887	--	--	4887	1551	66,804	21,785	21,785	66,804	21,196	61,917
1993	5754	630 1/	630	5754	1645	68,808	22,438	22,438	68,808	19,096	63,034
1994	5374	--	--	5374	1384	70,872	23,111	23,111	70,872	18,251	65,498
1995	5636	--	--	5636	1308	74,911 2/	23,804	23,804	74,911 2/	17,379	69,275

PV Costs = 39,072 PV Benefits = 235,387

$$B/C = \frac{235,837}{39,072} = 6.0$$

I.R.R. = 72.0%

1/ Replacement of Refrigerated Trucks

2/ Includes Salvage value of buildings.

d) Regime IV

Same as in II but additionally the projected value of production lowered by 20 percent.

The result of this test is a reduction in the B/C ratio from 6 to 1.47 and a reduction in the IRR from 72.0 percent to 23.7 percent.

e) Regime V

Project capital and operating costs are increased by 20 percent, projected project benefits delayed by 2 years but using assumptions about cumulative changes as in Table 11.

The result of this test is a decrease in the B/C ratio from 6.0 to 3.62 and the IRR is reduced from 72.0 percent to 40.0 percent.

f) Regime VI

Project capital and operating costs are increased by 20 percent, projected project benefits delayed by two years, cumulative changes in project targets as in Regime III.

The result of this test is a reduction in the B/C ratio to 1.08 from 6 and a reduction in the IRR from 72.0 percent to 12.98 percent.

It is only as a result of the rather drastic conditions imposed by Regime VI that the viability of the project is brought close to marginality.

The benefits calculated in earlier sections of the analysis are critically dependent on the assumed levels of cumulative changes in the project targets. The senior members of the Ministry of Agriculture (MACD) are convinced that the percentage changes used in the analysis are extremely conservative.

C. FINANCIAL ANALYSIS AND PLAN

The economic analysis has established that substantial benefits can be expected from this Project even on the basis of conservative assumptions, and that farmers, consumers and intermediaries can all be expected to benefit from the Project. This section will examine whether the GOJ can be expected to bear the financial costs of the Project, and whether the Sub-terminal Wholesale Distribution Markets and Assembly and Grading Stations can be expected to handle a sufficient volume of produce to meet their cost of operation.

1. Ability of GOJ to Meet Operating Costs of the Project

It is assumed that only the operating costs of the Marketing and Credit Division of the Ministry of Agriculture will have to be met out of the GOJ budget. The Markets and the Stations are expected to charge rates and to handle a volume of produce sufficient to cover their costs. In the following section, the reasonableness of this latter assumption will be explored in detail.

The total Central Government's budget (recurrent and capital) and that of the Ministry of Agriculture for the period 1975 through 1980 is presented in Table 17. The budget has been reduced by the amount of debt servicing to determine the funds available for expenditures in support of the Project in normal Government activities.

In order to estimate the impact of the required recurrent expenditures associated with the Project, these costs will be compared with the total GOJ budget and with the budget of the MOA (net of debt servicing) for 1979-1980. This comparison assumes that the budget will not increase in real terms, which is admittedly unrealistic. However, correction for this factor would not alter the results significantly. The recurrent costs associated with the Project are summarized in Table 18.

Table 18

Central Government Budget

(J$ Million)

Year	(1) GOJ Total Budget	(2) Debt Servicing	(3) Net Budget	(4) MOA Budget
1975-76	975-8	123.7	852.1	63.6
1976-77	1306.8	241.7	1065.1	100.4
1977-78	1231.0	203.3	1027.7	99.6
1978-79	1816.7	380.2	1436.5	127.0
1979-80	1760.3	395.2	1365.1	78.4

Table 19

Project Recurrent Costs in 1987

(1981 US$)---1/

Total Annual Operating Costs	3,857,000 2/
Less: Revenue Wholesale Dist. Mkts.	778,000 3/
Less: Revenue Assembly and Grading Stations	2,091,000
Net Additional Expenditures	US$ 988,000 or J$ 1,757,405
Percent of GOJ Budget	.13%
Percent of MOA Budget	2.24%

1/ At US$ = J$ 1.77875

2/ From Operating Cost Table 16

3/ Assumes that revenues will be equal to the recurrent costs projected in Operating Costs Table 16 (1986 Revenues do not meet total operating expenses due to late start-up costs of 5 AGS's in 1986 and only the 3rd year of SWDM operations.)

The calculation at the bottom of page 66 indicates that the projected recurrent expenditures[1] of the Marketing and Credit Division, the MOA, as a result of this Project, are not expected to impose a significant charge on the GOJ budget. It will increase their annual recurrent budget by only J$1.8 million, which constitutes .13 percent of the net[2] overall 1978/80 GOJ budget and 2.24 percent of the budget of the Ministry of Agriculture.

The impact that the Project will have on tax revenue should also be considered. A quick calculation of possible revenue collections can be made on the basis of the benefit-cost analysis in Table 16. In 1987, for example, the total projected annual benefits (undiscounted) were estimated at $45.3 million and costs at $3.9 million (in constant 1981 U.S. dollars) yielding net benefits of $41.4 million or J$73.6 million. Tax collections over the last three years have varied between 16 and 22 percent of the GDP. If we assume that only 10 percent of the increased income estimated from the Project can be captured by the tax system, tax collections would increase by J$7.4 million in 1987, which is a substantial multiple of the recurrent costs of the Marketing Division estimated in Table 15.

2. Profitability of Sub-terminal Wholesale Distribution Markets

The purpose of the following two sections is, first, to estimate the cost of operations of the Markets and of the Stations after they have become fully operational and, second, to estimate the amount of produce that would have to be handled by the facilities for them to break even, i.e., for their revenue to equal operating costs, assuming that rental charges for the use of the facilities bear a fixed percentage to the sales value of the produce. (See Table 19).

The costs per square foot in Table 21 are the average annual charges which the wholesalers would have to be assessed in order for the revenues to equal operating costs, including depreciation, assuming that the facility is fully utilized. The charges per square foot range from a low of $6.53 for vendor office space to a high of $25.58 for meat and fish storage. This significant range was to be expected as the cost of construction and maintenance for a refrigerated area is considerably greater than for simple office or market space.

The question which has to be answered at this point is, given the costs per square foot, what are the expected sales of wholesalers on a square foot basis and what percentage of those sales will the cost for use of the wholesale facility represent. Since this is a new activity in Jamaica, it was not possible to obtain reasonable estimates of either of these two variables. On the basis of studies and experience in other countries, it was determined that the rental charge should be about 2 percent of the value of the produce sold in the wholesale markets.

With the assumption of a 2 percent cost, the annual volume of produce that would have to be sold per square foot ranges from a low of 0.2 tons at the meat and fish market to a high of 1.7 tons at the fruit and vegetable storage facility. The FAO report indicates that facilities of this type generally sell annually between 0.4 tons per square foot in developing countries to 2.4 tons in developed countries. The weighted average 0.6 ton per square foot requirement obtained in Table 24 is near the lower end of this range. This minimum tonnage level should be readily attainable and is, in fact, likely to be exceeded.

---

1. The cost of the Marketing Division staff currently on the MOA payroll were netted out. Only recurrent costs are included in the calculation. The calculation also assumes that the Markets and Stations will cover their operating costs.

2. Total GOJ budget less debt service charges.

In summary, the revenues from the use of the Sub-terminal Wholesale Distribution Markets will cover operating expenses at a moderate cost to wholesalers.

TABLE 20

SWDM: OPERATING COSTS

	.33 Fruit & Veg. Mkt.	.38 M & F Mkt.	.05 G.P. Mkt.	.08 Farmers Mkt.	.04 Meat Stor	.04 F & V Stor	.08 Vendors Offices	Vehicles	Total
Mkt. Manager	127	146	19	31	15	15	31		384
Assistant Manager	92	106	14	22	11	11	22		278
Storage Manager					139	139			278
Assistant Storage Manager					112	111			223
Accountant	68	79	10	17	8	8	17		207
Clerk	94	108	14	23	11	11	23		284
Typist	52	61	8	13	6	6	13		159
Dispatch Clerk	74	84	11	18	9	9	18		223
Mechanical Equipment Maint.	103	119	16	25	13	12	25		312
Custodian	52	61	8	13	6	6	13		159
Laborers	73	85	11	18	9	9	18		223
Drivers								1282	1282
Gatekeeper	127	146	19	31	15	15	31		384
Guards	127	146	19	31	15	15	31		384
Total Salary	989	1141	149	242	368	367	242	1282	4780
Utilities, Telephone & Misc.	99	114	15	24	185	19	24		480
Vehicle Fuel & Maint.								600	600
Maint. (bldg. & Equip.)	240	275	39	61	480	48	57		1200
Depreciation									
Buildings	753	868	114	183	91	91	183		2283
Equipment	378	435	57	91	46	46	91		1145
Vehicle								1495	1495
Sub-total	2459	2833	374	601	1170	571	597	3377	11982
Contingency - 5%	123	142	19	30	59	29	30	139	601
	258.2	297.5	39.3	63.1	122.9	60.0	62.7	354.6	1258.3
% 4 (cost per WSDM)	646	744	98	158	307	150	157	887	3147
Rentable Space - Sq.ft.	9000	10800	1500	2400	1200	1125	2400		
Cost/Rentable space (operating cost / sq. ft.)	7.17	6.89	6.53	6.58	25.58	13.33	6.53		

Table 21

SWDM: Annual Operating Costs and Sales at Break-even

(US$ and Tons)

Market Section	(1) Area of Buildings Total	(2) Area of Buildings Rentable	(3) 1/ Operating Costs per Sq. Ft.	(4) Charge per Sq. Ft. as % of Sales	(5) 2/ Required Sales per Sq. Ft.	(6) Avg. Value	(7) 3/ Required Tons per Sq. Ft.
			$	%	$	($/ton)	Tons
1. Fruit & Vegetable Mkt.	16,000	9,000	7.17	2.0	359	385	.9
2. Meat & Fish Mkt.	18,000	10,800	6.89	2.0	345	1460	.2
3. Gen'l provisions Mkt.	2,000	1,500	6.53	2.0	327	704	.5
4. Farmers Mkt.	4,000	2,400	6.58	2.0	329	385	.9
5. Meat Storage	1,500	1,200	25.58	2.0	1279	1460	.9
6. Fruit & Veg. Storage	1,500	1,125	13.33	2.0	667	385	1.7
7. Vendors Offices	2,400	2,400	6.53	2.0	--	--	--
8. Aisles & Misc.	7,248	--	--	--	--	--	--
TOTAL SQ. FT.	52,648	28,425					
Weighted Average (Excludes Vendors Offices)			8.08		404		.6

1/ From Table ___

2/ Col 5 = Col 3 ÷ Col 4

3/ Col 7 = Col 5 ÷ Col 6

3. Profitability of Assembly and Grading Stations

Two general designs of the Stations have been prepared. The first will contain a grading and packing building, administrative office space, and limited storage totaling approximately 2040 square feet. The second design provides for a grading and packing building, office and storage space and, in addition, a cold storage facility totaling about 2720 square feet.

Since the size of the facility will depend on many factors, such as location, production, local infrastructure available, etc., this analysis has been undertaken using an average cost of $91,530 for construction of the facilities and $42,332 for equipment in order to determine the amount of produce which would have to be sold at the "average" Station in order for the revenues to cover the costs of operation including depreciation.

In Table 22 the estimated annual operating expenses for an average Assembly and Grading Station are presented.

Table 22

Assembly and Grading Stations Annual Operating Expenses

(US $000)

	Useful Life	Cost
Operating Expenses		
Admin. Staff and Labor		35.0
Utilities and Telephone		5.4
Materials and Containers		20.3
Vehicle-rent, Fuel and Maintenance		10.0
Maintenance (Bldg. and Equip.)		8.0
Total		78.7
Depreciation - Building 1/	20	4.6
- Equipment	10	4.2
Grand Total		87.5

1/ Total cost of the 25 stations is US$3,346,560 of which building costs will total $1,307,650, equipment $1,058,300 and site development $980,610.

Unlike the Sub-terminal Wholesale Distribution Markets, the revenue for the Stations will be generated by an assessment based on the sales value of the product, which we estimate will be a maximum of 5 percent. This charge will cover labor, packing materials, transportation, sales cost, and overhead. It is in line with charges for such services in other countries. Therefore, in order to cover the annual operating expenses of $87,500, sales should amount to a minimum of $1,750,000 per Assembly and Grading Station. This will represent approximately 4545 tons of fruits and vegetables, with an average farm-gate price of $385 per ton.

It is anticipated that the Stations will be used by farmers within a radius of approximately five to ten miles of the facility. Although an agricultural survey of the areas in which these facilities will be constructed has not been undertaken, it may be possible to roughly estimate what percentage of the production the required sales represent in an average producing area. Within a circle with a radius of five miles are 50,265 acres. If we assume that fruits and vegetables are cultivated on only 25 percent of this area with a value of production of $850 per acre,[1] then total annual production would have a value of $10,681,313 and represent a volume of about 27,740 tons. Therefore, the amount of produce that would be required to utilize a Station to the extent necessary to enable it to attain self-sufficiency would represent only about 16 percent of the total amount of produce raised within a five mile radius. Since the average percentage of production required is low, it is reasonable to assume that the revenue of the Stations will keep pace with operating expenses and that actual utilization will probably exceed the minimum volume requirement.

As the volume handled by the Stations increases, charges per unit handled can be reduced. After the break-even point of 4545 tons per annum is exceeded, it may be possible to reduce the rate charged from 5 percent to 3 percent, thereby encouraging still greater use of the facility.

The grading and packing will be done by hand and facilitated by machines of varying degrees of sophistication. At the break-even point, there will be a substantial amount of excess capacity. It is estimated that the grading and packing equipment to be provided under the Project will have a capacity of about 4.4 tons per hour or of approximately 13,200 tons of product annually, if the equipment is operated 300 days per year, 10 hours per day. We have noted that the amount of produce consistent with the break-even point is only 4545 tons per annum, or 34 percent of the equipment's maximum capacity.

In conclusion, it is reasonable to assume that revenues obtained from the Stations will cover operating expenses since the average percentage of production needed to break even is relatively low in relation to the area's total production, and the machine hours necessary to handle the volume of output at the break-even point are substantially below the equipment's rated capacity. The estimated cost of packing and grading is expected to be off-set by gains in the overall product and decreases in transportation costs.

4. Financial Plan

Tables 23 and 24 present the estimated cost of Phase II of the Project by sources and use of funds and the disbursement schedules.

---

1. Report of the Agricultural Sector Assessment Team of the Office of International Cooperation and Development of the U.S. Department of Agriculture to USAID/ Jamaica and to the Minister of Agriculture of Jamaica, "The Small Farmer in Jamaican Agriculture: An Assessment of Constraints and Opportunities," Kingston, November, 1978, p. 101.

Table 23

25 Assembly and Grading Stations (6 Large and 19 Small)

Annual FX and LC Requirements

($ US Rounded)

	AID / FX						GOJ / LC					
	Year 1	Year 2	Year 3	Year 4	Year 5	Total	Year 1	Year 2	Year 3	Year 4	Year 5	Total
Capital Costs												
Land acquisition	--	--	--	--	--	--	15,300	35,700	25,500	25,500	25,500	127,500
Construction	250,700	322,700	286,700	90,000	90,000	1,040,000	83,600	107,600	95,600	30,000	30,000	346,800
Site Development	--	--	--	--	--	--	231,700	303,700	267,700	90,000	90,000	983,100
Equipment	454,200	292,100	104,000	156,000	52,000	1,058,300	--	--	--	--	--	
1. Total Capital Costs	704,900	614,800	390,700	246,000	142,000	2,098,400	330,600	447,000	388,800	145,500	145,500	1,457,400
Operating Expenses												
Utilities, Telephone, and Miscellaneous	--	--	--	--	--	--	16,000	54,000	81,000	108,000	135,000	394,000
Staffing & Labor	--	--	--	--	--	--	48,000	202,000	384,000	595,000	830,000	2,059,000
Materials & Containers	--	--	--	--	--	--	31,000	133,000	255,000	357,000	459,000	1,235,000
Vehicle - Hire, Fuel, etc.	--	--	--	--	--	--	14,000	63,000	124,000	174,000	224,000	599,000
Buildings & Equip. Maint.	--	--	--	--	--	--	15,000	56,000	98,000	140,000	165,000	474,000
Gross Operating Expenses	--	--	--	--	--	--	124,000	508,000	942,000	1,374,000	1,813,000	4,761,000
Less 1/ operating expenses paid by provider groups	--	--	--	--	--	--	--	98,000	458,000	937,000	1,353,000	2,846,000
2. Net Operating Expenses	--	--	--	--	--	--	124,000	410,000	484,000	437,000	460,000	1,915,000
3. A&E Design & Supervision							11,070	25,830	18,450	18,450	18,450	92,250
Net Cost to GOJ (1,2&3)	--	--	--	--	--	--	465,670	882,830	891,250	600,950	623,950	3,464,650
4. Contingency (5%)	35,245	30,740	19,535	12,300	7,100	104,920	23,284	44,142	44,563	30,048	31,198	173,235
5. Inflation *	-0-	92,220	125,024	127,920	106,500	451,664	--	150,081	329,763	360,570	542,937	1,383,251
Project Element Cost	740,145	737,760	535,259	386,220	255,600	2,654,948	488,954	1,077,053	1,265,576	991,568	1,197,985	5,021,136
					ROUNDED	2,655,000					ROUNDED	5,022,000
TOTAL SWDM COSTS (AID & GOJ)						$7,677,000 US						

1/ Operating Expenses paid by Producer Groups: Year 1 of operation = 0%; Year 2 = 50%; Year 3+ = 100%

* @ 15% compounded on FX and @ 30% compounded on LC

BEST AVAILABLE COPY

Table 24

4 Subterminal Wholesale Distribution Markets (4) Costs

Annual FX and LC Requirements

($ US Rounded)

	AID / FX						GOJ / LC					
	Year 1	Year 2	Year 3	Year 4	Year 5	Total	Year 1	Year 2	Year 3	Year 4	Year 5	Total
Capital Costs												
Land acquisition	--	--	--	--	--	--	--	202,400	--	--	--	202,400
Construction	--	936,100	1,701,700	--	--	2,637,800	--	601,600	300,800	--	--	902,400
Site Development	--	143,200	--	--	--	143,200	--	781,740	2,384,260	--	--	3,166,000
Equipment	--	--	1,145,172	--	--	1,145,172	--	--	--	--	--	--
Trucks, Refrigerated (12)	--	--	897,000	--	--	897,000	--	--	--	--	--	--
1. Total Capital Costs	--	1,079,300	3,743,872	--	--	4,823,172	--	1,585,740	2,685,060	--	--	4,270,800
Operating Expenses												
Utilities, Telephone, miscellaneous	--	--	--	--	--	--	--	--	8,000	33,000	48,000	89,000
Staffing & Labor	--	--	--	--	--	--	--	--	131,000	444,000	478,000	1,053,000
Vehicle Fuel & Maint.	--	--	--	--	--	--	--	--	19,000	60,000	60,000	139,000
Building & Equip. Maint.	--	--	--	--	--	--	--	--	38,000	120,000	120,000	278,000
Gross Operating Expenses	--	--	--	--	--	--	--	--	196,000	657,000	706,000	1,559,000
Revenue*	--	--	--	--	--	--	--	--	--	218,000	654,000	872,000
2. Net Operating Expenses	--	--	--	--	--	--	--	--	196,000	439,000	52,000	687,000
3. A & E Design & Supervision	--	--	--	--	--	--	--	175,118	87,560	--	--	262,678
Net Cost to GOJ	--	--	--	--	--	--	--	1,760,858	2,968,620	439,000	52,000	5,220,478
Contingency (5%)	--	53,965	187,194	--	--	241,159	--	88,043	148,431	21,950	2,600	261,024
Inflation*	--	161,895	1,198,039	--	--	1,359,934	--	299,346	1,098,389	263,400	45,240	1,706,375
Project Element Cost	--	1,295,160	5,129,105	--	--	6,424,265	--	2,148,247	4,215,440	724,350	99,840	7,187,877
					ROUNDED	6,425,000					ROUNDED	7,188,000
Total SMDM Costs (USAID + GOJ)						13,613,000						

* 15% Compounded on FX and 17 % Compounded on LC

1/ 1.25 years of operation: 2 Markets operational Year 3 for 6 months; 1 for 3 months

BEST AVAILABLE COPY

D. SOCIAL SOUNDNESS ANALYSIS*

Overview

The internal marketing system of Jamaica consists of an atomistic traditional retail sector manned by over 20,000 small-scale intermediaries, together with an underdeveloped wholesaling sector which operates almost invisibly mainly from the farm directly to the large consumers. There is a modern sector consisting of supermarkets, green grocers and the Agricultural Marketing Corporation (AMC).

Traditional Sector

This aspect of the system evolved from slavery days when slaves grew and exchanged produce in Sunday markets. Over the years the system has displayed remarkable adaptive capacity under conditions of increased agricultural production, rural-urban population shifts, modernization and competition from the modern sector. The survival of the traditional sector is explained by its organic socio-economic linkage with the small farm sector of the island. The 20,000 "higglers" - food produce traders - are primarily wives or daughters of farmers, who function as the marketing arm of the small farm production unit and the farms in the surrounding community.

In attempting to explain the survival and continued dominance of the traditional sector, this study identified the incentives which it offers those who participate in it.

1. Nationally, the system effects the distribution of a wide assortment of products resulting in lower prices and higher quality produce than the modern sector. A comparison of product assortment and prices in traditional parish markets and modern supermarkets demonstrates this point.

2. It generates considerable employment and employment opportunities, primarily for rural women, but also for the urban under-employed who work as street vendors, handcart men, truckers, etc.

3. It effects the transfer of major cash flows to rural communities from urban centres on a regular basis.

4. It is a major contributor to the highly profitable transport industry.

5. Small farmers perceive the system as convenient, regular, accessible and in the interest of the farmer.

---

* Abridged from 63-page report prepared by local consulting sociologist contractor, Ms. Carleen Gardner in July, 1981. Reference copies on file in USAID/Jamaica and LAC/DR.

6. It confers status and a degree of economic independence to thousands of rural women higglers who are either heads of households or who, by virtue of their occupation, control household expenditures.

Despite these benefits, the system suffers from substantial inefficiencies, in that it cannot cope with increased production nor can it control the glut and shortage syndrome brought about by traditional planting cycles and limited storage of produce. Produce handling and transportation practices result in considerable post-harvest loss and conditions in retail markets are unsanitary.

The Modern Sector

Supermarkets, green grocers, processing operations and the government's Agricultural Marketing Corporation (AMC), comprise the modern sector which serves higher income urban consumers and large institutional consumers. The AMC, established in 1963, has declined in its farm-gate purchasing capacity. It has handled around 5% of domestic production. Its decline is accounted for by: (1) the competitive advantage of "higglers" at the farm-gate, (2) internal management problems, and (3) the expense of trying to meet conflicting objectives. Farmers perceive the AMC as a last resort buyer only suitable in times of a glut.

Agricultural Production

For a long time the production of locally consumed foods has been relegated to small farmers who provided for a market which had to compete with imported foods. Domestic crops are grown in the central uplands and on the dry southern plains. Crops produced are mainly short term cash crops such as vegetables, medium term root crops - yams and semi-permanent tree crops - coffee and bananas. Small farmers make a substantial contribution to many traditional export crops, such as sugar, bananas, coffee and spices.

The agricultural sector is characterized by small lot production on marginal hillside lands. There are 93,961 farmers, occupying 13% of the acreage, who farm plots of 5 acres or less (1968 census). This accounts for 48.6% of total farmers. In the category of farmers who operate farms of 1 - 10 acres, there are 119,198 or 87.9% of the total number of farmers.

Land Tenure

Most farms (90%) are owner-operated; however, many farmers also lease, rent or squat on land as a means of increasing acreage. Consequently, the majority of farms consist of two or more plots at some distance from the farmer's house. Tenural arrangements do not conform to official legal criteria, i.e. titled land, as a system of family land bond, is inherited jointly by all members of the family. The result is a high degree of fragmentation. Traditional tenure patterns tend to inhibit major long-term land development and support the short-term production cycle typical of the small farm sector.

Constraints under which small farmers operate are many, including marginal hillside land; seasonal rainfall; lack of capital; insufficient and expensive labor; pests and diseases; small acreages; uncertain markets; lack of reliable marketing information; competitive imported foods; limited and expensive agricultural inputs; inefficient farming methods and limiting social standing.

Social constraints are that farming is unattractive as an occupation, farmers are of low educational level and high average age at 55 years per the 1968 census. By and large, farmers are at the lowest end of the stratified Jamaican society, without access to scarce resources and influence. As a result, they feel powerless to effect change and perceive solutions as coming from outside, usually from the government.

Technology

Farming is conducted under a traditional system in which land preparation is carried out by hand. Multi-cropping is the usual method practised to guard against market uncertainties. Inter-cropping is an attempt to maximize small acreages and reaping is done on an as-needed basis, rather than at the proper time for best quality, in order to meet immediate cash needs and irregular buying schedules.

Basically, farmers follow a local planting cycle which, to some extent, takes into consideration topography, climate, micro-ecological factors and market demand. The farmer is therefore strongly influenced by his community and will not make changes in his planting cycle and practices unless he receives approval from the community.

As the island is small, and climatic differences are not that large, there is only a small variation in planting cycles and production patterns. As a consequence, crops mature according to seasons, resulting in extreme glut conditions in the market and periodic shortages.

Response to Change

Efforts to introduce change in farm practises have concentrated on chemical inputs and new seed varieties. Adoption of these practices has been successful, providing the farmer can afford to purchase the inputs. More long-term technological changes such as soil conservation measures, new crop husbandry practices and rational farm management techniques have been less successful, due to several factors: low educational level, inadequate research and development, high cost factors and necessary long-term involvement. Farmers tend to view each crop as a single investment to be measured against cash received from sales of the products of that particular crop.

Risk and Uncertainty

By using the traditional planting cycle and the multi-crop approach, the small farmer attempts to reduce his risks. Price variability as a result of gluts and shortages are expected and the innovative farmer will attempt to capture the opportunity for higher prices by planting one or two off-season crops and having an established relationship with two or three regular "higglers" to ensure that his produce goes regularly to market.

Post Harvest Losses

The major portion of crop loss is pre-harvest, resulting from drought, floods, pests, poor seed variety and poor farm management. Post-harvest loss is not readily evident to the farmer as he normally attempts to find some uses for crops which are not sold, and he typically does not get very involved in marketing beyond the farm-gate. Common loss avoidance techniques efforts are: drying and storing using traditional techniques, entering the marketing system as an intermediary and selling at a lower than market price, and adjusting production based on previous experiences of the market conditions. Farmers consume a great deal of produce in the home, convert

produce to animal feed and exchange with neighbors and friends. From the farmer's perspective post harvest crop losses are greatest when artificial stimulation of production is encouraged resulting in larger production volumes than the market can absorb. Alternately, farmers report that there are present increases in post-harvest losses and view this as a direct result of competition from imported foods.

Roads

The USDA/AID Agricultural Sector Assessment of 1978 describes the ratio of miles of roads per square mile of land (1.6 miles) as high by international standards. All the island's regions are accessible and maximum driving time between Kingston and outlying areas is 5½ hours. The road network is dendritic, allowing produce to be bulked in strategic market towns and moved to major population centres which are on the coast. The population centres are also the profit centres for the agricultural marketing system and any attempt at regional segmentation must take this into account. The limited number of profit centres and the relatively short distances between these centres and production areas are facilitators to the highly mobile small-scale intermediaries who now dominate the marketing system.

At the micro-level, access to transportation is a significant constraint to farmers whose holdings are located two to three miles from the roadways. While houses are rarely more than ¼ mile from feeder roads, farms are connected by bridle paths and tracks which are inaccessible to vehicular traffic. The traditional marketing system overcomes this constraint as the small-scale intermediary, with head-loading or animal purchases on the farm, bulks and packages at strategic points along the road way.

The proposed Agricultural Marketing Project does not address this constraint directly and assumes that the traditional system will continue to effect the haulage of produce from farm to roadway. The difficulty faced by farmers in removing produce from the farm is a significant contributor to post harvest loss.

The Farmer's Role in Marketing

By and large, Jamaican farmers do not perceive marketing as part of their role. They depend on the local intermediary higgler, who is most often a part of the farmer's kinship or neighborhood group. The advantages of trading with the local intermediary are: convenience, regularity, accessibility, cash payments, assistance with reaping and a lower produce rejection rate. In many cases, the small intermediary is merely the marketing arm of the small farm unit. Since there is no formal system of effectively disseminating marketing information, farmers are forced to also depend on the small intermediary for information on prices, market conditions and types and amounts of crops to plant.

Problems of the Marketing System

While our analysis clearly indicates that the present marketing system offers incentives both to intermediaries and to farmers, the system exhibits serious problems, many of which are recognized by the participants themselves. It is clear that existing intermediaries are limited in their capacity to handle large volumes and to influence the glut-shortage syndrome. The present system cannot accommodate further increases in production without improved marketing factors, nor can it service proposed developments in agri-business and large farm production. Farmers reported problems with the present marketing system as:

a) low profits and high production costs

b) price fixing and improper grading

c) untimely and inaccurate marketing information

d) higglers' inability to purchase large volumes

e) losses from unpurchased produce.

Intermediaries' problems reported in our study include:

a) high transport costs

b) poor and unsanitary facilities in the parish markets

c) seasonality of production

d) lack of transport

e) poor quality produce.

Post-Harvest Loss to Intermediaries

Damage from poor handling in transit results in approximately 10% reduction of profits to the small intermediary. Wholesalers report lower losses, but have difficulties in obtaining sufficient produce to fill quotas due to seasonality and low volume production.

Given the present awareness by the major marketing participants/beneficiaries, of the problems in the present marketing system, the proposed Agricultural Marketing project will be perceived by them as a positive and acceptable response to negative conditions which they are now experiencing.

The Medium-Sized Farm Sector

Domestic food production on medium-sized farms is relatively new. At present these farms contribute only 20 percent to total production, but have potential for a much larger market share. Our investigation points out that larger farms have greater access to credit and utilize a higher level of technology.

Marketing channels for medium-sized farms are primarily the AMC, direct farm to consumer contracts and contacts with hotels and institutions. Small-scale intermediaries are used only for surplus produce. While these farmers have more marketing options and more leverage in the system, they suffer most as a result of the inefficiencies.

Their problems are:

1) the larger volumes produced result in greater post-harvest loss

2) they have no links with export markets

3) they have poor storage facilities

4) there are no incentives for improving technology or increasing production.

Assessment of Constraints

While there is positive linkage between the perceived needs of farmers and intermediaries and the objectives of the project, the success of the project depends on the following important assumptions regarding willingness to participate in the project.

1) Willingness of farmers to utilize marketing information and extension advise from the Ministry of Agriculture's new Marketing Division. This study concludes that farmers respond favorably to reliable market information and to guaranteed market arrangements.

2) Willingness of the farmers to establish and sustain viable cooperative marketing organizations.

   Producer marketing cooperatives have a high risk of failure in the Jamaican socio-political environment. Our investigation concluded that, since the history of such local organizations is marked by: financial, unequal distribution of benefits, political interference, low mobilization capacity, and elite leadership and control, and since farmer's decisions to participate is based on past experience, these organizations will be critical to attaining project objectives. In this regard, the project is likely to achieve its first measure of success if it concentrates on existing small groups of selected farmers who already show high interest motivation. The design and creation of producer marketing cooperatives will require careful planning and monitoring.

3) Willingness of farmers to sell their produce to assembly and grading stations.

   Bearing in mind the competitive advantage of "higglers" and motorized wholesalers, the operational design for assembly and grading stations must offer adequate incentives to farmers if they are to function successfully. AGS must be:

   a) conveniently located

   b) offer transportation to collect produce

   c) offer better farm-gate prices

   d) offer reliable service

   e) handle larger volumes than existing channels

   f) require less time investment from farmers.

   A carefully designed package of incentives and management system for the operations of the AGS must be developed if the project is to be successful.

4) Willingness of wholesalers to formalize their operations and to utilize the wholesale distribution markets (WDM).

   Existing wholesalers conduct business informally in retail parish markets and through direct farm-to-consumer services and have few incentives to formalize their operations. Without credit and technical assistance, they

will be unwilling to utilize new facilities and will continue to service clients through traditional informal arrangements. A strategy for incorporating existing wholesalers is part of this project.

5) Technology, management skills, credit and inputs must be made available to farmers in order to facilitate increased production. The project goal of increased production will only occur if the several constraints faced by small farmers are addressed. At present, the high costs of production due to inefficient farm management, high cost of inputs, and inappropriate crop husbandry techniques are important factors in the high cost of domestic produce. Farmers' PRIMARY method for increasing production heretofore has been to increase acreages, but with the high cost of labor this strategy will contribute little in the future to improving overall productivity of the farm. Unless the project directly addresses these issues, it will not be able to affect production level significantly, solely by creating new markets. The potential of AGS as service centres and as part of a comprehensive extension service should be fully exploited, aimed at also supplying farm inputs and influencing farm practices.

Project Impacts

Small Scale Intermediaries

Earlier analysis indicated negative impact of the project on small-scale intermediaries in the long term. This projection was based on the view that the AGS concept would be adopted in all geographical areas, providing island-wide coverage and supplanting the traditional marketing arrangements by virtue of its cost effectiveness and efficiency. The implicit assumption was that incentives for participation in the AGS operations would outweigh those presently offered by the traditional system.

More in-depth investigation has verified the dominance of the traditional system and the adaptive capacity of the small-scale operators. Consequently, this analysis focuses more concretely on the feasibility of the project than on project impacts. In other words, given the character of the traditional system, will the proposed project work?

Our view is that small farmers will utilize the AGS only under certain incentive conditions; otherwise, their relationship with existing channels will continue. Even with incentive conditions, the bond between the small-scale intermediary and the small farmer will not be broken, so that both channels will co-exist.

Consequently, no displacement of small-scale intermediaries is anticipated. Furthermore, AGS's will only be established where there are clear indications of inadequate marketing facilities, and where a producer group indicates a need. These conditions are to be verified by a comprehensive socio-economic survey at the micro-level to establish level of "higglering", extent of higgler-farmer bond, employment levels, contribution of "higglering" to local economy, etc. Provided that site selection is in fact based on these findings, the project will not result in displacement of small-scale intermediaries.

In any event, it appears that where an AGS is established, small-scale traders would have more options regarding where they purchase. If the AGS makes sales at the site, small-scale intermediaries are likely to buy produce from the AGS in preference to the farm-gate. The project would conceivably result in reduced travel time and cost to the small operator and permit regular trips to the retail market during the week.

The potential benefit here is increased earnings and full time employment.

The small intermediary may also have the option to function as the transport link between farm-gate and AGS, provided that the profit requirements are met.

In summary, the project, if executed according to existing guidelines, should not disturb the traditional marketing system, but will offer options to small-scale intermediaries to participate at various points in the marketing chain.

Impact on Farmers

In attempting to predict the impact of the project on farmers, the first step is to confront the fact that the farming community is stratified into small farmers (87.9%) on the one hand and medium and, rarely, large sized farms on the other. Since farm size and socio-economic status are correlated, we are looking at two distinct types of farmers. The characteristics of both groups have been described and it is clear that their situations are decidedly different, with the medium-sized farmers living in an advantageous position.

In assessing impact, it is fair to say that both groups are likely to benefit. However, due to constraints inherent in the small farm sector, improved marketing alone will be of less significant benefit to the small farmer than to his better poised counterpart.

Improved marketing facilities will allow the small farmer to market produce which he now disposes of before it enters the marketing system or which now rots in the field. This will bring the farmer from what can be a net loss position, given his investment in production and his low yields, to a break-even point. It is only by combining marketing with technological inputs and credit that significant changes in productive capacity and, therefore, income will result. Anticipated changes in role concept and marketing behaviour resulting from extension and cooperative training may occur, however, over a longer time period than the life of the present project.

Medium and large sized farmers, who already have better access to technology, credit and markets are poised to reap immediate benefits from this project. Large volume production of high quality produce is more readily achievable under the commercialized farming system, where marketing is presently the most significant constraint. These conditions will also make for more successful AGS operations.

Our conclusion is that the general tendency for benefits to be skewed in favour of larger farmers, where socio-economic stratification exists, will become evident in this project unless attention is given to the factors constraining small farmer participating in the project.

Conclusion and Recommendations

After extensive investigation and analysis, which examined primarily the socio-cultural feasibility of the project, but also other possible impacts on farmers and intermediaries, we set out the following conclusions.

The Agricultural Marketing Project is feasible, from a socio-cultural perspective, providing that careful attention is given to development of the following project elements:

a) producer marketing cooperatives

b) management systems for the AGS

c) incentives for wholesalers

d) integration of service and extension functions at the AGS.

Considerable constraints to participation were identified. These emanated from the intrinsic nature of the traditional system, which continues to offer incentives to all participants and which consists of well-developed linkages between producer and intermediary, as well as between intermediary and consumer. While the traditional marketing system contains recognized deficiencies, participants are not likely to change traditional trading patterns unless incentives are strong. The project design recognizes this and will concentrate its resources in geographical areas where marketing needs are clearly articulated by potential participants. The significance of a careful research and monitoring component and a rational site selection procedure for this project is clear.

Our analysis identified the possibility of skewed benefits in favor of medium-sized farmers, who have fewer constraints and are better poised to obtain benefits from improved marketing. This issue can be addressed by a strategy which ensures that improved marketing is accompanied by a technological package which includes credit, in order to permit smaller participating farmers to improve production techniques, increase yields and earning power.

Intermediaries will obtain the benefit of increased options for securing produce and alternative ways of participating in the marketing system. One relatively unexplored potential is the area of providing assistance to intermediaries in packaging and handling produce as a direct method of reducing post-harvest loss and increasing income.

This analysis concludes that the project's objectives are consistent with the perceived needs of farmers and intermediaries, however strong incentives to encourage participation must be incorporated. Careful monitoring of the operational viability of the AGS is required to ensure that benefits accrue to smaller participating farmers.

E. ADMINISTRATIVE ANALYSIS

1. GOJ

The MOA, through its Marketing and Credit Division (MACD), will be the implementing agency of the Project for the GOJ. Cooperating agencies will be the Agricultural Projects Research Unit (ARPU) of the Ministry of Construction and the Ministry of Local Government (MLG). The MLG is responsible for local Parish governments and providing public services (e.g., water, sewer and garbage collection). The MLG owns and operates the retail Parish markets, and they own some of the land in or near the municipalities where Subterminal Wholesale Distribution Markets may be constructed. All three agencies have worked together in the World Bank/ GOJ First Rural Development Project and are cooperating in the project being funded by IDB to reconstruct 16 Parish retail markets.

The GOJ will be responsible for all contracting to be done for the project. Construction contracts will be awarded by MOA upon recommendation of the ARPU, to local contractors on a competitive basis. The MOA will procure all equipment needed for AGSs and SWDMs from U.S. suppliers on a competitive basis, with help from AID. The MOA will also be responsible for SWDM management and operations throughout the life of the project. The MOA will fund AGS operations for the initial two years of operations, with the local farmer/producer organizations picking up the full costs thereafter. The MOA/MACD will also be providing such services as described in Phase I (market news, research, extension, training, quality inspection, etc.) to the AGSs and SWDMs. The MACD will also provide quarterly progress reports to AID, and participate in annual reviews.

The Marketing Division of the Ministry of Agriculture (MACD) will have overall responsibility for the implementation of the project. The Division currently has on board 50 employees; a total of 96 slots exist for the Division. People are currently being interviewed and slots will be filled over time. It is expected that the MOA will be able to hire the necessary personnel. There is an expected reduction of AMC staff, all with some marketing experience, which will form a sufficient pool of human capital resources from which to draw. Most of this new personnel will require in-house, and in some cases, overseas training. This recruitment and training process is in line with the original PP analysis and is an integral part of Phase I's Project design.

The capacity of the MACD to carry out the project has been enhanced by the USDA Technical Assistance team funded under Phase I of this project. This team will provide 29.5 person years of long-term and short-term technical assistance in the main areas of responsibility for the MACD. The team will assist in the preparation of the MOA/MACD training plan.

The MOA/MACD staff will also benefit from support provided by the USAID/GOJ Agricultural Planning Project begun in 1979. As discussed in the Phase I Administrative Analysis, this project will provide support to three units of the MOA that relate directly to the MACD. These units are the Training Division, the Data Bank and Evaluation Division and the Planning and Policy Review Division. Project funds will be provided by the GOJ for training management and staff on such matters.

Overall, the results of the training and technical assistance provided under Phase I of this project will lead to the establishment of a professional organization within the MOA with the capacity to develop and institutionalize an efficiently operating marketing system within Jamaica for food crops, meats and fish.

The organization and management of AGSs will take different forms as determined by the socio-economic analysis to be carried out in the potential site areas. These forms could be cooperatives, limited liability corporations or some other form of producers' associations. Experience exists in Jamaica with several organizational forms.

Wholesale Distribution Markets will be managed by a limited liability company with the GOJ as the only shareholder. This is a familiar institutional arrangement in Jamaica and has a number of advantages. These include more autonomy regarding personnel and financial matters than a government agency. The company would keep its own books, pay its own operating and amortization expense from revenue and return the balance to the shareholder. The company can set and change fee schedules for use of the facilities within reasonable bounds. In addition, if necessary during the early stages of operation, the MOA can cover any deficits of the company out of central treasury funds without loss of autonomy by the company. Although AID endorses this procedure, the MOA may make further study of the possibility of selling off shares in the company to wholesalers/tenants of the SWDMs. This would be in line with present Government policy of returning companies to the private sector. The capacity of the management staff of the SWDMs and AGSs will be improved by training to be provided by the Marketing Division.

Procurement of materials and personnel, by A.R.P.U. and the MACD for the successful implementation of the project will pose no problem. As previously mentioned, A.R.P.U., M.O.A. and M.L.G. have all worked together on other related projects such as the I.D.B. Parish Market Project. The Marketing Division has also had experience in procurement through implementation of Phase I of the Agricultural Marketing Project.

Logistic support will be provided by G.O.J. and A.I.D. Transportation for the Marketing and Credit Division is being financed in Phase I by A.I.D. Transportation, in the form of 3 refrigerated trucks for each SWDM, will be provided by the project with A.I.D. funds. Transportation for AGSs is provided by producer groups, market intermediaries, and by the project with GOJ funds.

2. USAID Capacity

The USAID-Agriculture and Rural Development Office (ARDO) will have primary management responsibility for the Agricultural Marketing Development Project, Phase II as with Phase I of this project. A project manager has been assigned and will devote at least 50% of his time to this project. He will keep track of the project through quarterly reports, site and ministry visits, implementation letters, voucher approvals, contract bid approvals, annual reviews, etc. The project manager will be responsible to assure that all conditions precedent and convenants are met by GOJ. He will also make sure all AID inputs are ordered and delivered on a timely basis, and assist in procurement, if necessary. The project manager will also try to assure that MOA will be able to carry on with the project after Project Activity Completion Date (P.A.C.D.) Staff of the ARDO office has been increased by one U.S. Direct Hire. Management of the Agricultural Marketing Development Project, Phases I and II will be benefitted by this staff increase.

As this project contains a large construction element, the USAID/ Jamaica has adjusted its staffing pattern to accommodate a USDH engineer, and such engineer will be responsible for monitoring engineering aspects of the project. The Agriculture Research Projects Unit of the Ministry of Agriculture will provide engineering support for the project.

The Agriculture and Rural Development Office, with primary responsibility for project management, will still require the same degree of support from the Capital Development, Controller, and Program Offices during implementation as has been provided during project preparation.

Conclusion:

The conclusion of this section is that the necessary policy and organizational framework exists in Jamaica through the MACD of the MOA; the needed personnel can be obtained and trained. The MOA can carry out the organization and management training for the Subterminal Wholesale Distribution Markets and the Assembly and Grading Stations. Finally, the USAID will be able to perform its Project management responsibilities.

V. IMPLEMENTATION PLANNING

A. AGS Facilities

Assuming authorization of the project by end of 1st Quarter in FY-82, and according to the following schedule, it is estimated that ground could be broken for the first AGS as early as 25 August, 1982.

	EVENT	DATE
1.	AID/Washington Project Approval.	31 Dec 81
2.	GOJ/USAID Sign Loan Agreement.	15 Jan 82
3.	MACD completes Socio-Economic Survey and identifies producer organizations for 1st 3 proposed AGS sites.	31 Jan 82
4.	ARPU completes Topographic Survey and Soil Tests.	15 Feb 82
5.	MOA acquires title to 3 AGS sites, prepares equipment specs and PIO/C	1 Apr 82
6.	ARPU/MACD approve Quantity Surveyor and develops Final Design Drawings and Bills of Quantities and pre-bid construction cost estimates for approval by AID Engineer.	15 Apr 82
7.	Local construction contractors and U.S. equipment suppliers short-listed and invitations for Bids (IFB) and advertisements published.[1/]	1 May 82
8.	ARPU and MOA receive and evaluate sealed bids and recommend contract awards.	1 July 82
9.	USAID approves contract awards for construction and equipping initial 3 AGS.	10 July 82
10.	ARPU receives contractors' performance guarantees and recommends mobilization advances.	20 July 82
11.	Contractor starts work on AGS and MOA orders equipment.[2/]	25 Aug 82
12.	Construction completed and MOA accepts possession.	30 Nov 82
13.	Delivered and installed equipment.	20 Dec 82

1/ #7 can take place during steps 5 & 6 above.

2/ AGS equipment requires 3-4 months for delivery.

3/ Mobilization to require 6 months ordering/delivery lead time.

The preconstruction time, after acquisition of site, will average 5 1/2 months for the AGSs. Construction will take about 3 months. The MOA proposes to start construction of 3 AGSs in project year 1 with all three in full operation by the end of that year (30 Sept. 82); 7 more operational by the end of year 2 (30 Sept. 83); 5 more in each of years 3, 4 and 5 for the total of 25 (30 Sept. 86). The AGS facilities, each to be located on a site of approximately two acres, will consist of a grading and packing shed, an office and dry storage block. The minimum size of a grading and packing shed will be 34' x 60' (2040 sq. ft.) which is sufficient to provide shelter for workers, accommodate grading and packing equipment, and stack incoming produce before grading, as well as the packed produce awaiting shipment. The 25 AGSs will be constructed at a total base cost of US$2.4 million.

Equipment to be installed at the various Stations will vary greatly depending upon the anticipated type and volume of crops to be handled at respective stations. The minimum will include a simple grader with cull eliminator, inspection rollers, brushes, sizer and packing tables. Other facilitating equipment will include roller conveyors, scales, and miscellaneous packing aids. The larger facilities, 34' x 80' (2720 sq. ft.) depending upon the crops to be handled, will have a grading line consisting of a cull eliminator, washer, dryer, rinser, wax applicator, sizing units, distribution belts and packing tables. In addition, precooling equipment (i.e., hydro-cooler or air blast) may be provided. Roller conveyors, scales, carts and other packing aids will also be included. In essence, the type of equipment to be provided will be correlated with the type of operations and the target market. Present estimations of AGS equipment base costs are US$1.06 million.

B. SWDM Facilities

Acquisition of SWDM sites will start taking place around April of 1982. It is estimated to take 6 months after MOA's acquisition of the first SWDM site to start construction (Project year 2, Oct. 82) with completion 18 months later. Two SWDMs are proposed for start Oct. 82; one in Jan. 83 and the fourth April 83. Three SWDMs are expected to be operating during part of year 3, and all four will be in operation in year 4.

	EVENT	DATE
1.	ARPU completes Topographic Surveys and Soil Tests at SWDM sites.	Mar 82
2.	MOA acquires title to 4 SWDM sites.	Apr 82
3.	ARPU/MACD develops final design drawings Bills of Quantity and pre-bid construction cost estimates for approval by AID engineer.	May 82
4.	Local construction contractors short-listed and IFB and advertisements published.	June 82
5.	MACD receives letters of intent from wholesale-tenants for 50% of rentable space.	June 82
6.	ARPU/MOA receive and evaluate sealed bids and recommend contract award(s).	Aug 82
7.	USAID approves construction contract award.	Sept 82
8.	ARPU receives contractor's performance guarantees and recommends mobilization advance(s).	Aug 82

9.	Contractor starts work on SWDM.	Oct 82
10.	MACD/ARPU develop equipment specs, cost estimates, PIO/C and IFB advertisements for AID approval and publication.	July 83
11.	MACD/ARPU receive and evaluate sealed bids and recommend contract award(s).	Sept 83
12.	USAID approves contract award and authorizes Letter of Committment for supplier(s).	Oct 83
13.	Comprehensive Project Evaluation.	Nov 83
14.	Construction completed on 4 SWDM facilities and MOA accepts possession.	Apr 84
15.	Equipment delivered and installed.	Apr-May 84
16.	Project Assistance Completion Date.	31 Dec 86
17.	End of Project Evaluation.	Feb 87

The four SWDM facilities, each to be located on 15 acre sites, will be similar in size. Each will consist of market blocks for fruits and vegetables, meat and fish, and general provisions (food grains, beans, lentils, etc.); a general administration block; a gatehouse containing employee facilities; a maintenance block; and a farmers' market. The four markets will be constructed at a total cost of US$7.1 million. Equipment for each includes; 3 refrigerated trucks, storage bins, bath dryer, meat rails and hooks, back-up generators, roller conveyors, carts, scales, and fork lifts (refer to Annex I). The total cost of equipment is about US$2.1 million. Equipment lists and blueprints will be finalized after site selection.

C. Evaluation Plan

Two kinds of evaluations will be carried out: annual reviews of project implementation and special evaluations of progress towards project objectives.

The annual reviews will be conducted towards the end of each calendar year, so as to be most useful to the Ministry in the preparation of its budget request for the following fiscal year. The Ministry's budget request is usually forwarded to the Ministry of Finance in January or February so that the final budget can be agreed upon in Cabinet and in the legislative branch and be ready for implementation at the April 1, start of the GOJ fiscal year. These annual reviews will usually involve Ministry staff and consultants, plus USAID staff. Implementation matters are expected to be the main topic at the beginning, primarily, the provision of inputs and the accomplishment of outputs. (Purpose level considerations will become increasingly more important as the project advances and the effects of the overall effort are taking hold.) Preparations for the first annual review, proposed for Nov. 82, will be concerned with specifically, among other things, the gathering of all data then available that can serve as baseline information for later measurements of progress towards achievement of end-of-project status indicators (as shown in the logical framework or developed in the interim). The importance of this baseline data to subsequent evaluations can not be overemphasized.

BEST AVAILABLE COPY

TABLE 25

SCHEDULE OF CONSTRUCTION AND EQUIPMENT FOR AGS & SWDMS

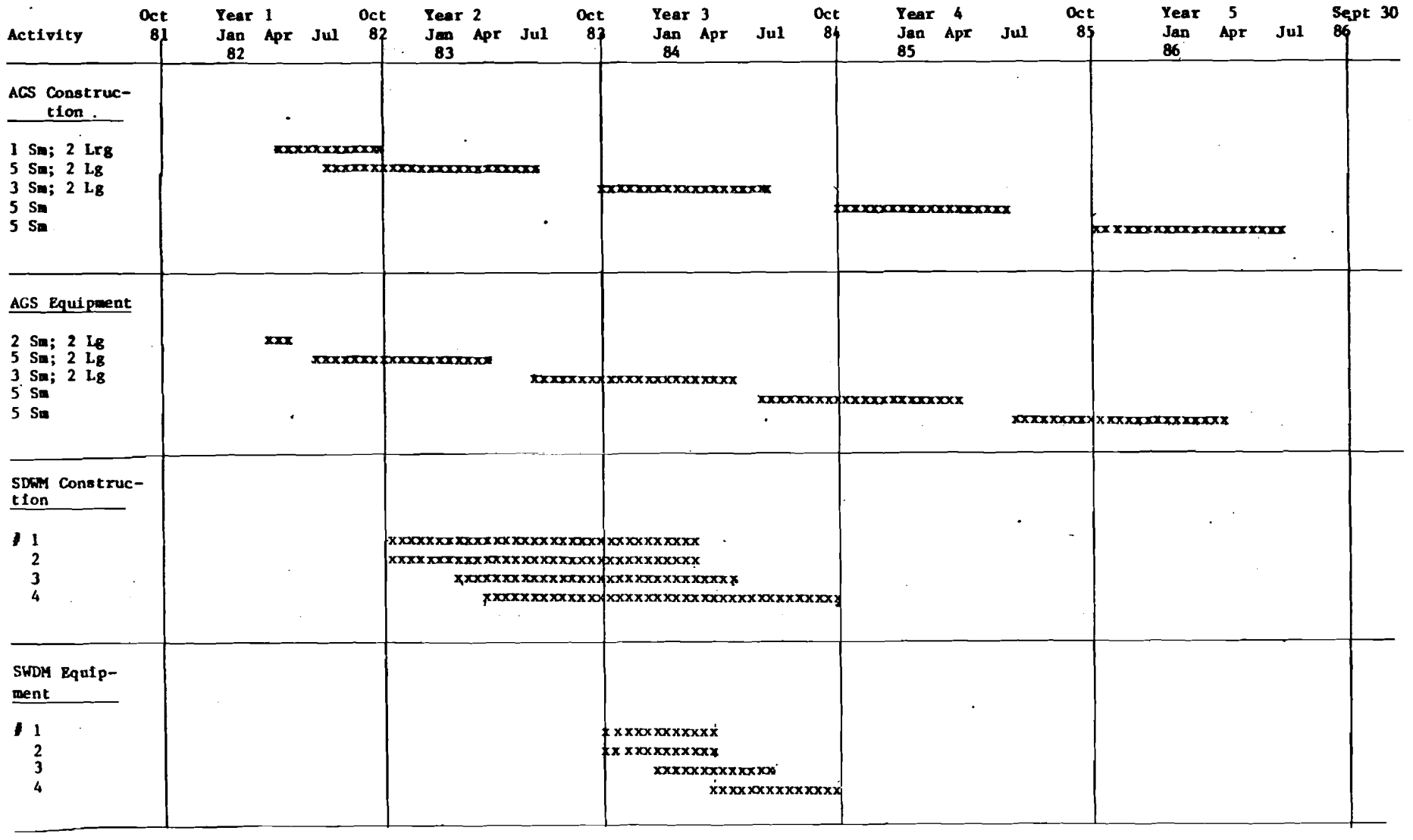

Two special evaluations are also planned. These evaluations are designed to deal with progress towards achieving the project's purpose and goals, and the inter-relationship of project elements with each other, and with events in Jamaica external to the project. As such, they will require assistance from AID/Washington direct-hire or contractor specialists thoroughly familiar with basic national food marketing systems, in addition to Ministry staff and consultants, and USAID staff. These evaluations must await some significant progress at the goal and purpose levels. According to the planned rates of implementation, we expect that enough progress will have taken place to allow special evaluations to be scheduled for the end of 1983 (three years after the formal initiation of Phase I activities and roughly two years after the initiation of Phase II activities) and for 1986-87, the end of the project. While the first special evaluation might possible be timed for completion before the annual review of the project in late 1983, so that it can feed into that review, the second special evaluation would be timed for completion roughly four to six months after the formal Project Assistance Completion Date of December 31, 1986.

Both special evaluations will, by their nature, be complex affairs even though the objectives of such evaluations are straight-forward. Achievement of predicted impacts on such variables as beneficiary incomes and the efficiency of the marketing system will, of course, form only part of the subject matter of these evaluations, as many subjective judgements will also have to be made by the evaluators. Nevertheless, adequate and as accurate as possible baseline data will be necessary to facilitate all aspects of these evaluations. As stated above, these data will be gathered in preparation for the first annual project review and be available for the special evaluations.

D. Conditions Precedent and Covenants

1. Conditions Precedent

In addition to the standard conditions precedent concerning Borrower's opinion of counsel, names and specimen signatures of Borrower's authorized representatives -- the following conditions and covenants will be included in the Loan Agreement for this proposed Phase II:

(a) CP to Disbursement for Construction for Sub-terminal Wholesale Distribution Markets: Prior to disbursement of funds for construction of each sub-terminal Wholesale Distribution Market, the Borrower shall furnish to A.I.D., in form and substance satisfactory to A.I.D.; (I) evidence that clear title is held by the Borrower to the site on which construction is to be erected for project-financed activities, and (II) copies of prospective wholesalers' Letters of Intent to lease space in each of the rentable blocks, the number of prospective leasors and details of the leases to be mutually agreed upon by MACD and A.I.D.

(b) CP to Disbursement for Construction of Assembly and Grading Stations: Prior to disbursement of funds for construction of each Assembly and Grading Station, the Borrower shall furnish to A.I.D., in form and substance satisfactory to A.I.D., evidence that (I) a socio-economic survey has been conducted for the AREAS OF the proposed producer organization and site and that the conclusion of the analysis is such that a socially and economically viable enterprise is feasible; (II) that a farmers group or producers association has been formally established and constituted to oeprate the AGS facility under a

BEST AVAILABLE COPY

purchase or lease agreement, and (III) that a clear title is held by the Borrower or the Operating Producer Organization to the site on which construction is to be erected for project-financed activities. Concerning the form and substance of the ACS socio-economic surveys, the MACD survey questionnaires, methodology and the team composition will be subject to USAID review and approval prior to their use and implementation and such surveys will address financial as well as social and economic feasibility considerations.

2. Covenants

The following covenants were included under Phase I of this Project and remain in effect:

"SECTION 6. 1. Project Evaluation: The Parties agree to establish an evaluation program as part of the Project. Except as the Parties otherwise agree in writing, the program will include, during the implementation of the Project and at one or more points thereafter: (a) evaluation of progress toward attainment of the objectives of the Project; (b) identification and evaluation of problem areas or constraints which may inhibit such attainment; (c) assessment of how such information may be used to help overcome such problems; and (d) evaluation, to the degree feasible, of the overall development impact of the project.

SECTION 6. 2. Additional Covenants:

(a) Implement procedures to ensure the cooperation of the Ministry of Agriculture, as the implementing Agency for the Borrower, the Ministries of Finance, Public Service, Local Government, Construction, Industry and Commerce, the Town Planning Unit and such other Agencies of the Borrower as may be necessary to enable the Project to meet its implementation goals;

(b) Provide adequate budget allocations for project implementation in a timely manner consistent with implementation schedules developed by the Agricultural Marketing Division;

(c) Within three months of the signing of the Project Agreement, provide a time-phased Implementation Schedule for the remainder of the first project year, such schedule to be in form and substance satisfactory to A.I.D.;

(d) For each twelve-month period commencing three months after the signing of the Project Agreement, furnish time-phased Implementation Schedules for each twelve-month period of the Project, each based on the results of the Annual Evaluation and the Annual Audit of the Project during the previous twelve-month period, such schedules to be in form and substance satisfactory to A.I.D."

In addition to retaining the above Section 6.1 and 6.2 covenants, one additional covenant will be added under Phase II:

"(a) The Borrower covenants that, unless A.I.D. otherwise agrees in writing, it will place proceeds from the sale of project-funded equipment to tenants at the Wholesale Distribution Markets into a special fund and that the Marketing Division will propose uses for this special fund in support of project objectives. The uses of the special fund are subject to written concurrency by A.I.D."

The new conditions precedent and the additional covenant has beed discussed with the Ministry of Agriculture. The Mission and the Ministry are in agreement as to the utility of these clauses for successful project implementation.

BEST AVAILABLE COPY

NARRATIVE SUMMARY	OVIS	MEANS AND VERIFICATION	ASSUMPTIONS
Goals			
To improve the well being of farmers, consumers and market intermediaries.	1. Measured change in farmer incomes.	1. MOA Data Bank Surveys.	1. Normal weather patterns.
	2. Measured change in market intermediary incomes.	2. MOA Data Bank Surveys.	2. No shift in consumer preferences regarding domestic vs imported foods.
	3. Differentiated products available at differentiated prices.	3. Observation - MOA Marketing Division.	3. No significant adverse movement in terms of trade for agricultur[illegible] vis-a-vis rest of economy.
Purpose	**End of Project Status**		
To initiate the development and application of improved marketing practices for food crops, meat and fish production for domestic (and export) markets.	1) Decreased post harvest loss 1980 (base) 35% 1986 (EOP) 29% 1988 (final) 25%	1. Baseline Survey plus evaluation survey in 1986.	1. Farmers can adopt technologies that help limit crop losses.
	2) Decreased marketing cost 1980 (base) 68% 1986 (EOP) 62% 1988 (final) 60%	2. "	2. Road/transportation network does not d[illegible]ibrate.
	3) Increased production, annual increments 1980 (Base) - 1987 (Post EOP) 3% 1989 (Final) 5%	3. "	3. No less competitive situation in rural and inter-urban transportation than [illegible] present.
		4. "	4. Consumer food budgets do not decrease in real terms.
		5. "	5. Foreign exchange available for needed production and related marketing inputs.
		6. "	6. Transportation facilities expand as required.
	4) Either farmers are growing for specialty markets (products or off season) or a higher portion of their production is accounted for by fewer crops.	7. "	7. Retail marketing no less competitive than at present.
	5) Spatial distribution of marketed goods improved, as evidenced by inter-market price movements being more closely related than at present.		
	6) Glut/shortage syndrome reduced as measured by reductions in seasonal price fluctuations.		

BEST AVAILABLE COPY

NARRATIVE SUMMARY	OVIS	MEANS OF VERIFICATION	ASSUMPTIONS
Outputs - Phase I			
1. Marketing Division Established	1. 96 personnel (55 technicians and 41 others) working in: a) Program Direction and Support; b) Marketing Development; c) Market Information and Research; (d) Quality Assurance and (e) Regional Marketing Extension to do the following: a) Develop and diffuse marketing information and research results to producers, market intermediaries, retail customers, actual and potential agribusiness investors, and GOJ decision makers and analysts; b) Develop and carry out formal and informal training programs for producers and producer groups, market intermediaries and Marketing Division staff; c) Carry out the formation of, and facilitate financing for 25 producer associations, including at least 10 producers associations successfully operating AGS facilities for at least two years. d) Develop and implement a system of grades and standards for fruits, vegetables and meats, plus provide inspection and enforcement services.	1. Marketing Division Records	1. Continued GOJ budget funds made available for Marketing Division. 2. Adequate staff can be recruited, trained (as needed) and retained. 3. Technical advisory services are of high quality.
Outputs - Phase II			
1. Sub-terminal Wholesale Distribution Markets	1. A. Construction Four markets constructed by end of year 3. Includes storage and farmers market facilities. B. Operation 1) Adequate staff working 2) At least 85 percent of wholesaler space rented two years after completion.	1. A. Marketing Division records. B. (1) Evaluations in 1983 and 1986; (2) Marketing Division records.	1. Wholesalers willing to lease spa early enough to permit completio of construction by end of 1985.

NARRATIVE SUMMARY	OVIS	MEANS AND VERIFICATION	ASSUMPTIONS
2. Assembly and Grading Stations.	2. A. Construction 25 AGSs constructed, including an estimated 19 small (averaging 2040 square feet) plus 6 large (averaging 2720 square feet) with cold storage facilities; 3 completed by year 1, 10 by year 2, 15 by year 3, 20 by year 4 and 25 by year 5. B. Operation 1) Adequate staff working. 2) 10 AGS associations operating successfully for two years by 1986. 3) 15 AGS associations operating their facilities at 25% of theoretical capacity. 4) 15 AGS associations funnelling credit to their members.	2. A. Marketing Division records B. (1), (2), and (3) - Evaluations in 1983 and 1986 and project records, (4) Marketing Division and producer association records.	2. Producer associations can be developed early enough to permit completion of construction by end of 1985. 3. Adequate credit funds available for associations.

Inputs - Phase I (US $ 000)

	Year 1	2	3	4	5
Technical Assistance	660	648	704	642	512
Training	61	198	228	73	32
Commodities	55	64	3	2	2
Marketing Division Operating Expenses	286	530	557	574	590
Contingencies	53	72	75	65	57
SUBTOTAL	1115	1512	1567	1356	1193
Inflation	—	151.2	329.1	447.5	548.78
TOTAL	1115	1663.2	1896.1	1803.5	1741.78

1. AID and Marketing Division records.

Inputs - Phase II (US $ 000)

	Year 1	2	3	4	5
1. Wholesale Distribution					
Site Work	--	924.9	2384.3	--	--
Land	--	202.4	--	--	--
Buildings	--	1537.7	2002.5	--	--
Trucks and Equipment	--	--	1145.2	--	--
Operating expenses (net)	--	--	196	439	52
A&E design	--	175.1	87.6	--	--
SUBTOTAL: WDM	--	2840.1	5815.6	439	52
2. Assembly and Grading Stations					
Land	15.3	35.7	25.5	25.5	25.5
Buildings	334.3	430.3	381.3	120	120
Equipment	454.2	292.1	104	156	52
Operating Expenses	124	410	484	437	460
Site Work	231.7	303.7	267.7	90	90
A&E design	11.1	25.8	18.5	18.5	18.5
SUBTOTAL: AGS	1170.6	1497.6	1281	847	766
3. SUBTOTAL: WDM plus AGS	1170.6	4337.7	7096.6	1286	818
Contingency @ 5%	58	206.8	349.5	63.4	40
Inflation @avg. 16% (compounded)	--	694	2455.4	721.4	663.4
TOTAL	1228.6	5238.5	9901.5	2070.8	1521.4

1. AID and Marketing Division records.

2. AID and Marketing Division records.

1. ARPU supervises construction.

2. Equipment fabricators can deliver on schedule.

3. Inordinate numbers of producer associations do not cease operations (i.e. cost of moving AGS facilities is affordable).

BEST AVAILABLE COPY

5C(2) - PROJECT CHECKLIST

Listed below are statutory criteria applicable generally to projects with FAA funds and project criteria applicable to individual fund sources: Development Assistance (with a subcategory for criteria applicable only to loans); and Economic Support Fund.

CROSS REFERENCES: IS COUNTRY CHECKLIST UP TO DATE? Yes. See AG Planning PP (532-0061)
HAS STANDARD ITEM CHECKLIST BEEN REVIEWED FOR THIS PRODUCT? Yes.

A. GENERAL CRITERIA FOR PROJECT

1. FY 79 App. Act Unnumbered; FAA Sec. 653 (b); Sec. 634A. (a) Describe how Committees on Appropriations of Senate and House have been or will be notified concerning the project; (b) is assistance within (Operational Year Budget) country or international organization allocation reported to Congress (or not more than $1 million over that figure)?	Project included in FY'82 CP.
2. FAA Sec. 611(a)(1). Prior to obligation in excess of $100,000, will there be (a) engineering, financial, and other plans necessary to carry out the assistance and (b) a reasonably firm estimate of the cost to the U.S. of the assistance?	Yes. Included in Sections III. C. and IV. D. of PP Addendum
3. FAA Sec. 611(a)(2). If further legislative action is required within recipient country, what is basis for reasonable expectation that such action will be completed in time to permit orderly accomplishment of purpose of the assistance?	None Required
4. FAA Sec. 611(b); FY 79 App. Act Sec. 101. If for water or water-related land resource construction, has project met the standards and criteria as per the Principles and Standards for Planning Water and Related Land Resources dated October 25, 1973?	NA
5. FAA Sec. 611(e). If project is capital assistance (e.g., construction), and all U.S. assistance for it will exceed $1 million, has Mission Director certified and Regional Assistant Administrator taken into consideration the country's capability effectively to maintain and utilize the project?	Yes. Included as Annex B of PP Addendum
6. FAA Sec. 209. Is project susceptible of execution as part of regional or multilateral project? If so why is project not so executed? Information and conclusion whether assistance will encourage regional development programs.	This project deals strictly with the institutional and capital infrastructure for marketing of locally produced farm products

A.

7. FAA Sec. 601(a). Information and conclusions whether project will encourage efforts of the country to: (a) increase the flow of international trade; (b) foster private initiative and competition; (c) encourage development and use of cooperatives, credit unions, and savings and loan associations; (d) discourage monopolistic practices; (e) improve technical efficiency of industry, agriculture and commerce; and (f) strengthen free labor unions.

The Project will strongly support host country efforts in areas (a) thru (e) as discussed in Sections II and III of PP Addendum. The effect on area (f) will be minimal.

8. FAA Sec. 601(b). Information and conclusion on how project will encourage U.S. private trade and investment abroad and encourage private U.S. participation in foreign assistance programs (including use of private trade channels and the services of U.S. private enterprise).

US private firms will participate in supplying substantial equipment and construction materials.

9. FAA Sec. 612(b); Sec. 636(h). Describe steps taken to assure that, to the maximum extent possible, the country is contributing local currencies to meet the cost of contractual and other services, and foreign currencies owned by the U.S. are utilized to meet the cost of contractual and other services.

The GOJ is contributing over half the total cost and all of the local currency cost of the Project; the US does not own any Jamaican currency.

10. FAA Sec. 612(d). Does the U.S. own excess foreign currency of the country and, if so, what arrangements have been made for its release?

No.

11. FAA Sec. 601(e). Will the project utilize competitive selection procedures for the awarding of contracts, except where applicable procurement rules allow otherwise?

Yes.

12. FY 79 App. Act Sec. 608. If assistance is for the production of any commodity for export, is the commodity likely to be in surplus on world markets at the time the resulting productive capacity becomes operative, and is such assistance likely to cause substantial injury to U.S. producers of the same, similar, or competing commodity?

The Project is primarily to assist in marketing; increase in production will not be of the type or quantity of crops which will cause substantial injury to U.S. producers or be in surplus on the world market.

B. FUNDING CRITERIA FOR PROJECT

1. Development Assistance Project Criteria

a. FAA Sec. 102(b); 111; 113; 281a. Extent to which activity will (a) effectively involve the poor in development, by extending access to economy at local level, increasing labor-intensive production and the use of appropriate technology, spreading investment out from cities to small towns and rural areas, and insuring wide participation of the poor in the benefits of development on a sustained

The Project will: (a) directly involve both the small farmer and the rural poor through improved marketing facilities in rural/small town areas and reduced waste for food and other agricultural products, resulting in better returns for producers and intermediaries and lower prices for consumers.

B.1.a.

basis, using the appropriate U.S. institutions; (b) help develop cooperatives, especially by technical assistance, to assist rural and urban poor to help themselves toward better life, and otherwise encourage democratic private and local governmental institutions; (c) support the self-help efforts of developing countries; (d) promote the participation of women in the national economies of developing countries and the improvement of women's status; and (e) utilize and encourage regional cooperation by developing countries?

(b) encourage cooperatives in carrying out marketing functions; (c) involve major self help measures; (d) substitute some better job opportunities for the drudgery of the present role of women in marketing.
(e) N/A

b. FAA Sec. 103, 103A, 104, 105, 106, 107. Is assistance being made available: (include only applicable paragraph which corresponds to source of funds used. If more than one fund source is used for project, include relevant paragraph for each fund source.)

It will directly assist both the small farmer and the landless rural poor through improved marketing efficiency and reduced waste for food and other small farm agricultural products.

(1) [103] for agriculture, rural development or nutrition; if so, extent to which activity is specifically designed to increase productivity and income of rural poor; [103A] if for agricultural research, is full account taken of needs of small farmers;

(2) [104] for population planning under sec. 104(b) or health under sec. 104(c); if so, extent to which activity emphasizes low-cost, integrated delivery systems for health, nutrition and family planning for the poorest people, with particular attention to the needs of mothers and young children, using paramedical and auxiliary medical personnel, clinics and health posts, commercial distribution systems and other modes of community research.

(3) [105] for education, public administration, or human resources development; if so, extent to which activity strengthens nonformal education, makes formal education more relevant, especially for rural families and urban poor, or strengthens management capability of institutions enabling the poor to participate in development;

(4) [106] for technical assistance, energy, research, reconstruction, and selected development problems; if so, extent activity is:

(i) technical cooperation and development, especially with U.S. private and voluntary, or regional and international development, organizations;

(ii) to help alleviate energy problems;

(iii) research into, and evaluation of, economic development processes and techniques;

(iv) reconstruction after natural or manmade disaster;

B.1.b.(4).

(v) for special development problem, and to enable proper utilization of earlier U.S. infrastructure, etc., assistance; ——

(vi) for programs of urban development, especially small labor-intensive enterprises, marketing systems, and financial or other institutions to help urban poor participate in economic and social development. ——

c. [107] Is appropriate effort placed on use of appropriate technology? ——

d. FAA Sec. 110(a). Will the recipient country provide at least 25% of the costs of the program, project, or activity with respect to which the assistance is to be furnished (or has the latter cost-sharing requirement been waived for a "relatively least-developed" country)? Yes.

e. FAA Sec. 110(b). Will grant capital assistance be disbursed for project over more than 3 years? If so, has justification satisfactory to the Congress been made, and efforts for other financing, or is the recipient country "relatively least developed"? N/A

f. FAA Sec. 281(b). Describe extent to which program recognizes the particular needs, desires, and capacities of the people of the country; utilizes the country's intellectual resources to encourage institutional development; and supports civil education and training in skills required for effective participation in governmental and political processes essential to self-government. The project accomplishes these goals as set forth in Sections II and III of the PP Addendum.

g. FAA Sec. 122(b). Does the activity give reasonable promise of contributing to the development of economic resources, or to the increase or productive capacities and self-sustaining economic growth? Yes.

2. Development Assistance Project Criteria (Loans Only)

a. FAA Sec. 122(b). Information and conclusion on capacity of the country to repay the loan, including reasonableness of repayment prospects. Jamaica's economy is being helped out of recent difficulties by the IMF, IFI's and bi-lateral donors. Jamaica has never defaulted on a government to government loan.

b. FAA Sec. 620(d). If assistance is for any productive enterprise which will compete in the U.S. with U.S. enterprise, is there an agreement by the recipient country to prevent export to the U.S. of more than 20% of the enterprise's annual production during the life of the loan? N/A

B.

3. Project Criteria Solely for Economic Support Fund

a. FAA Sec. 531(a). Will this assistance support promote economic or political stability? To the extent possible, does it reflect the policy directions of section 102? N/A

b. FAA Sec. 533. Will assistance under this chapter be used for military, or paramilitary activities? N/A

Annex C
Page 1 of 1

Certification Pursuant to Section 611 (e) of the Foreign Assistance Act of 1961, as Amended

SUBJECT: Jamaica - Capital Assistance - Agricultural Marketing Development Loan, Amendment (Phase II)

I, Glenn O. Patterson, as Director of the United States A.I.D. Mission to Jamaica, having taken into account inter alia, the maintenance and utilization of projects in Jamaica, previously financed or assisted by the United States, do hereby certify that, in my judgement, Jamaica has both the financial capability and human resources to maintain and utilize effectively the proposed Agricultural Marketing Development Loan Amendment.

This judgement is based primarily on the facts developed in the project paper for the proposed loan/amendment of Nine-Million One Hundred Thousand Dolars ($9,100,000) and A.I.D.'s review of the financial assistance previously provided to Jamaica.

Glenn O. Patterson
Glenn O. Patterson
Director

11/27/81
Date

BEST AVAILABLE COPY

ANNEX D.

Department of State
INCOMING TELEGRAM
American Embassy Kingston

CD

UNCLASSIFIED

R 260049Z SEP 79
FM SECSTATE WASHDC
TO AMEMBASSY KINGSTON 9708
BT
UNCLAS STATE 252917

1/2

ON. NO.: 8928
7149
RECD: 9-26-79

TO	ACT	INF	INT
AMB			
DCM			
POL			
ECON			
ECDA			
DAO			
ADM			
PER			
PF			
GSO			
PC			
RF			
CHRN			

AIDAC

E.O. 12065:N/A

TAGS:

SUBJECT:DAEC REVIEW OF JAMAICA AG MARKETING PP (532-0060)

1. THE DAEC REVIEWED AND APPROVED THE MARKETING COMPONENT OF THE PROJECT ON SEPTEMBER 7, 1979. PRIOR TO APPROVAL OF THE SUBTERMINAL WHOLESALE DISTRIBUTION MARKETS AND ASSEMBLY/GRADING STATIONS COMPONENTS OF THE PROJECT, FURTHER PROJECT DESIGN WORK AS DETAILED BELOW IS REQUIRED. THIS SHOULD BE PRESENTED AS A REVISION OR SUPPLEMENT TO THE CURRENT PROJECT PAPER FOR AID/W REVIEW.

THE PP PRESENTS AN OVERALL MARKETING SYSTEM MODEL. THE MISSION SHOULD TAKE THIS CONCEPTUAL MODEL AND APPLY IT AT THE COUNTRY LEVEL INCORPORATING THE FOLLOWING ANALYSES.

--(A) ENGINEERING ANALYSES. IN APPLYING THE MODEL TO THE COUNTRY LEVEL, THE MISSION SHOULD DETAIL THE SELECTION OF AT LEAST ONE SUBTERMINAL WHOLESALE DISTRIBUTION MARKET AND ASSOCIATED ASSEMBLY/GRADING STATIONS. THIS ANALYSIS SHOULD INVOLVE COMPLETE PRELIMINARY ENGINEERING WORK, INCLUDING SITE LOCATION, DETAILED COST ESTIMATES, EQUIPMENT LISTING, IMPLEMENTATION AND PROCUREMENT PLANS AND SCHEDULES, USAID MONITORING PLANS AND REQUIREMENTS, TRANSPORTATION LINKAGES ETC. THESE DATA SHOULD THEN BE USED AS A BASIS FOR ESTIMATING THE CAPITAL COSTS OF THE OVERALL MARKETING SYSTEM CONTEMPLATED IN THE PP TO DEMONSTRATE THAT PROPOSED PROJECT CONSTRUCTION AND EQUIPMENT ESTIMATES ARE ADEQUATE FOR APPROVAL OF THE CONSTRUCTION COMPONENTS.

--(B) TECHNICAL AND ECONOMIC ANALYSES. ALTHOUGH THE PP PRESENTS A MARKETING MODEL, A FULL DESCRIPTION AND ANALYSIS OF HOW THE MARKETING SYSTEM WILL WORK UNDER THE PROJECT SHOULD BE DEVELOPED, ESPECIALLY:

DATE REC.D: 9/26
ACTION OFFICE: ARDO
INFO. TO:
DOM ✓
EA
PROG
CAP ✓
MGT
CONT ✓
DUE BY:
ACTION TAKEN:

UNCLASSIFIED

UNCLASSIFIED

--(1) A DESCRIPTION AND APPRAISAL OF THE EXISTING MARKETING SYSTEM (AND SUPPORTING ACTIVITIES SUCH AS TRANSPORT AND CREDIT) INCLUDING PRESENT AGRICULTURAL PRODUCTION INCENTIVES, EFFICIENCIES AND INEFFICIENCIES, MAJOR CONSTRAINTS TO INCREASED AGRICULTURAL PRODUCTION, AND THE ROLE AND EFFECTIVENESS OF THE AMC IN THE SYSTEM;

212
P928

--(2) HOW THE NEW SYSTEM WILL BE STRUCTURED AND FUNCTION, INCLUDING THE ANTICIPATED ROLES OF PRODUCERS, FARMER ASSOCIATIONS, HIGGLERS, CONSUMERS, AND PRIVATE SECTOR ORGANIZATIONS. IN ADDITION THE MISSION SHOULD EXPLORE OTHER ALTERNATIVES TO GOJ OPERATION OF THE MARKETING SYSTEM INCLUDING THE JAMAICAN AGRICULTURAL SOCIETY OR OTHER PRIVATE SECTOR GROUPS RELATIVE TO OWNERSHIP, OPERATION, AND MANAGEMENT OF THE PHYSICAL AND INSTITUTIONAL INFRASTRUCTURE TO BE ESTABLISHED UNDER THE PROJECT; AND

--(3) A MICRO LEVEL ANALYSIS OF HOW THE NEW MARKETING SYSTEM WILL IMPROVE UPON THE EXISTING SYSTEM. THIS MAY BE FACILITATED BY TRACING THE FLOW OF AGRICULTURAL PRODUCE THROUGH THE NEW SYSTEM, PLACING PARTICULAR EMPHASIS ON (A) THE IMPACT OF PRICES AND MARKETING COSTS AT THE FARM, WHOLESALE, AND CONSUMER LLEVELS, (B) PRICE DIFFERENTIATION AND SUPPLY/DEMAND ANALYSES FOR THE VARIOUS CROPS EXPECTED TO BE HANDLED IN THE NEW SYSTEM AND (C) ADVANTAGES AND DISADVANTAGES FOR PRODUCERS, HIGGLERS, CONSUMERS, MARKETING AND FARMER ORGANIZATIONS, AND OTHERS EXPECTED TO PARTICIPATE IN THE NEW SYSTEM.

--(C) SOCIAL ANALYSES. A MAJOR ISSUE DISCUSSED EXTENSIVELY AT THE DAEC CONCERNED THE TARGET GROUPS UNDER THE PROJECT. THE MISSION IS REQUESTED TO ANALYZE AND DESCRIBE INTENDED BENEFICIARIES, INCLUDING FARMERS, HIGGLERS AND CONSUMERS. ORDER OF MAGNITUDE ESTIMATES AS TO SHARE OF PROJECT BENEFITS FLOWING TO THESE THREE GROUPS SHOULD BE INDICATED. PARTICULAR ATTENTION SHOULD BE FOCUSED ON THE HIGGLERS AND SMALL PRODUCERS -- THEIR NUMBERS AND LOCATION; SIZE OF THEIR OPERATIONS; RELATIONS BETWEEN HIGGLERS, SMALL PRODUCERS, AND PROVIDERS OF SUPPORTING SERVICES; ATTITUDES TOWARD THE PRESENT AND PROPOSED MARKETING SYSTEMS; THE DEGREE OF HIGGLER DISPLACEMENT ANTICIPATED; AND MEASURES, IF ANY, TO BE TAKEN TO ADDRESS HIGGLER DISPLACEMENT.

Accomplished in Surveys

2. AVAILABILITY OF GRANT FUNDS. IT IS ANTICIPATED THAT ONLY A LIMITED AMOUNT OF GRANT FINANCING WILL BE AVAILABLE FOR FY 80. THE MISSION IS ENCOURAGED TO EXPLORE WITH GOJ WHETHER ALL OR PARTS OF THE ITEMS PROPOSED FOR GRANT FINANCING RELATED TO THE MARKETING DIVISION CAN BE INCLUDED UNDER THE ACCOMPANYING LOAN. CHRISTOPHER
BT
#2917

UNCLASSIFIED

ANNEX E

DRAFT

PROJECT AMENDMENT AUTHORIZATION

Name of Country: Jamaica

Name of Project: Agricultural Marketing Development

Number of Project: 532-0060

Number of Loan: 532-T-013

1. Pursuant of Section 103 of the Foreign Assistance Act of 1961, as amended, I hereby authorize the Agricultural Marketing II Project Amendment for Jamaica, involving additional planned obligations of not to exceed Nine Million, One Hundred Thousand United States Dollars ($9,100,000) in loan funds over a one-year period from the date of authorization, subject to the availability of funds in accordance with the A.I.D. OYB/allotment process, to help in financing foreign exchange and local currency costs for the project.

2. The project Amendment consists of the construction of four Sub-Terminal Wholesale Distribution Markets (SWDM) and twenty-five Assembly and Grading Stations, (AGS), the primary execution agency being the Ministry of Agriculture (the "MOA") to increase the efficiency of Jamaica's agricultural marketing system (the "project").

3. The Project Agreement Amendment, which may be negotiated and executed by the officer to whom such authority is delegated in accordance with A.I.D. regulations and Delegations of Authority, shall be subject to the following essential terms and covenants and major conditions, together with such other terms and conditions as A.I.D. may deem appropriate:

a. Interest Rate and Terms of Repayment:

The Government of Jamaica (the "Borrower") shall repay the Loan Amendment to A.I.D. in U.S. Dollars within twenty (20) years from the date of first disbursement of the Amended Loan, including a grace period of not to exceed ten (10) years. The Borrower shall pay to A.I.D. in U.S. Dollars interest from the date of first disbursement of the Loan Amendment at the rate of (i) two percent (2%) per annum during the first ten (10) years, and (ii) three percent (3%) per annum thereafter, on the outstanding disbursed balance of the Loan Amendment and of any due and unpaid interest accrued thereon.

BEST AVAILABLE COPY

b. Source and Origin of Goods and Services:

Goods and Services, except for ocean shipping, financed by AID under the Project shall have their source and origin in Jamaica or in countries included in AID Geographic Code 941, except as AID may otherwise agree in writing. Ocean shipping financed by AID under the Project shall, except as AID may otherwise agree in writing, be financed only on flag vessels of the United States and Jamaica.

c. Condition Precedent to Disbursement for Construction for Sub-Terminal Wholesale Distribution Markets:

Prior to disbursement of funds for construction of each sub-terminal Wholesale Distribution Market, the Borrower shall furnish to AID in form and substance satisfactory to AID, (i) evidence that clear title is held by the Borrower to the site on which construction is to be erected for project-financed activities, and (ii) copies of prospective wholesalers Letters of Intent to lease space in each of the rentable blocks, the number of prospective leasors and details of the leases to be mutually agreed upon by MACD and AID.

d. Condition Precedent to Disbursement for Construction of Assembly and Grading Stations:

Prior to disbursement of funds for the construction of each Assembly and Grading Station, the Borrower shall furnish to AID, in form and substance satisfactory to AID, evidence that (i) a socio-economic survey has been conducted for the area of the proposed producer organization and site and that the conclusion of the analysis is such that a socially and economically viable enterprise is feasible, and (ii) that a formally established farmers group or producers association has been constituted to operate the AGS facility under a purchase or lease agreement, and (iii) that a clear title is held by the Borrower or the operating producer organization to the site on which construction is to be erected for project-financed activities.

Concerning the survey in item (i) above, the MACD survey questionnaire, methodology and team composition will be subject to USAID review and approval prior to their use and implementation,and such surveys will address the financial as well as social and economic feasibility considerations.

e. Covenants:

The Borrower shall covenant that, unless AID otherwise agrees in writing, it will:

place proceeds from the sale of project-funded equipment to tenants at the Wholesale Distribution Markets into a special fund and that the Marketing Division will propose uses for this special fund in support of project objectives. The uses of the special fund are subject to written concurrence by AID.

The new conditions precedent and the additional covenant have been discussed with the Ministry of Agriculture. The Mission and the Ministry are in agreement as to the utility of these clauses for successful project implementation.

Assistant Administrator Bureau for Latin America and the Caribbean	Date

ANNEX F

Illustrative Equipment List: AGS
($US Rounded)

All Costs Are Foreign Exchange Funded By AID

Type-I (19 Small Sites)	UNIT COST	TOTAL COSTS
19 (1 EA.) Small Grader Assemblies	15,000	285,000
1520' (80' EA.) Skate-Roller Conveyor	$10/Ft.	15,200
38 (2 EA.) Push Carts	350	13,300
38 (2 EA.) Platform Scales	450	17,100
		330,600
Spare Parts @ 15%		49,590
		380,190
Shipping & Insurance @ 30%		114,051
		494,247
	ROUNDED	$ 494,000

Type-II (6 Large Sites)		
6 (1EA.) Large Grader Assemblies	50,000	300,000
6 (1 EA.) Hydro Pre-Cooler	10,000	60,000
780' (130' EA.) Skate-Roller Conveyor	$10/Ft.	7,800
12 (2 EA.) Push Carts	350	4,200
12 (2 EA.) Platform Scales	450	5,400
		377,400
Spare Parts @ 15%		56,610
		434,010
Shipping & Insurance @ 30%		130,203
		564,213
	ROUNDED	$ 564,300

TOTAL COSTS 25 AGS UNITS = $1,058,300

B

ASSY NO & QTY 05	04	03	02	01	ITEM NO	DESCRIPTION	MAT'L SPEC	DWG ASSY OR ITEM NO
						QUANTITIES ARE FOR ONE UNIT		
						A-4		
					1	48" WIDE X 10'-0" LONG DUMP PREGRADER 3/4 H.P. DRIVE		
					2	14'-0" X 25'-0" 8 SPOOL CITRUS SIZER WITH 10 PACKING BINS		
						1 1/2 H.P. DRIVE & 2-3/4 H.P. DRIVES		
						A-5		
					1	8'-0" WIDE X 25'-0" HYDROCOOLER SLAT CONVEYOR		
						ICE TANK 15 H.P. PUMP OVERALL HEIGHT 10'-0"		

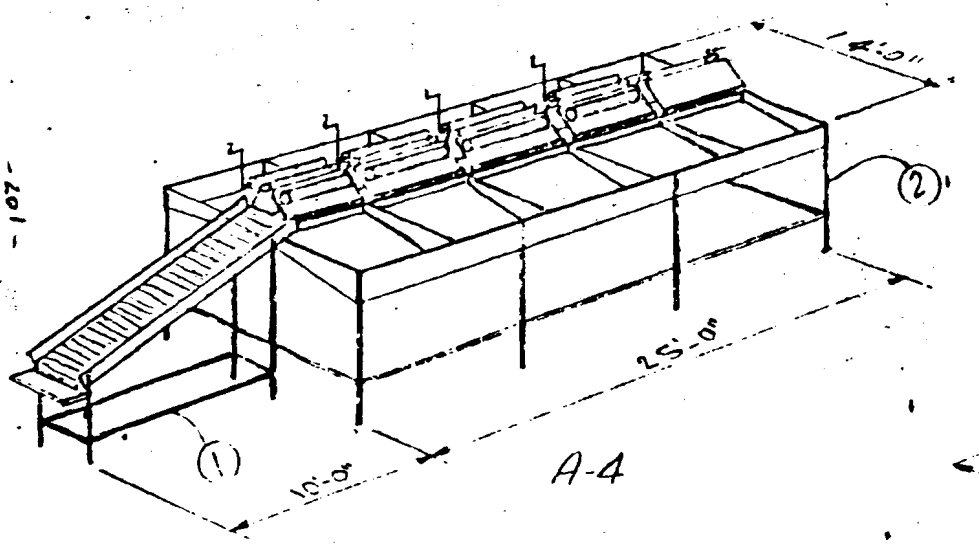

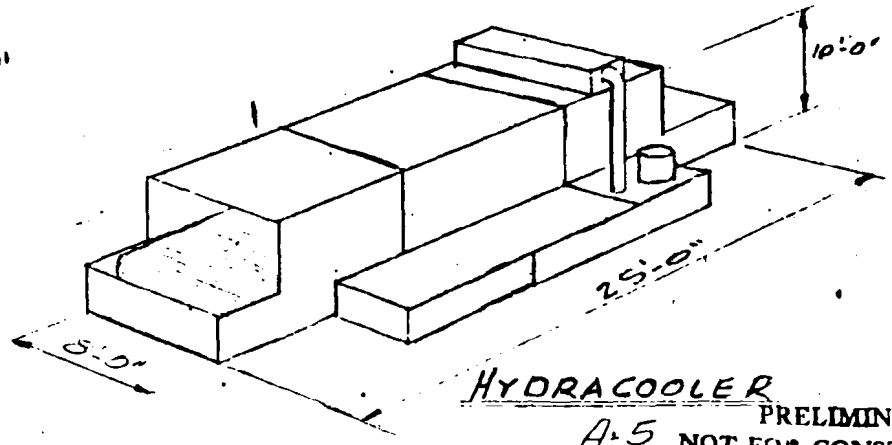

AUG 27 1981

PRELIMINARY
NOT FOR CONSTRUCTION

ALL DIMENSIONS ARE IN INCHES EXCEPT AS NOTED

REV	DESCRIPTION	DATE	BY

TOLERANCES UNLESS NOTED

FRACTION ± DECIMAL ±

SURFACE FINISH NOTE

UNLESS OTHERWISE SPECIFIED ROUGHNESS HEIGHT ON ALL MACHINED SURFACES SHALL NOT EXCEED

√ MICRO-INCHES

Aeroglide® RALEIGH N.C. | PacRite® ORLANDO FLA

TITLE: A-4 CITRUS LINE 6-SIZES

BY	NAME	DATE
DR	RGS	[illegible]
CHECK		
APPRO	[illegible]	8/7/81
SCALE		

P847-881-04 F.L.

DRAWING NUMBER

B

BEST AVAILABLE COPY

B

ASSY NO & QTY 05	04	03	02	01	ITEM NO	DESCRIPTION	MAT'L SPEC	DWG ASSY OR ITEM NO
					1	48" WIDE x 10'-0" LONG DUMP TANK SPRAY HEAD 3/4 H.P. DRIVE		
					2	48" WIDE x 24' ROLL WASHER 4 LINE SPRAY HOOD 5 H.P. DRIVE		
					3	48" WIDE x 8'-0" LONG DOUBLE SIZER 3 H.P. DRIVE		
					4	60" WIDE x 25'-0" LONG HOT AIR DRIER WITH L.P. GAS BURNER		
					5	16" WIDE x 15'-0" LONG COMMERCIALS AND CULL BELT 3/4 H.P. DRIVE		
					6	48" WIDE x 12'-0" GRADING TABLE 1 H.P. DRIVE		
					7	30" WIDE x 15'-0" LONG BAGGING BELT WITH 3 DOUBLE BAGGERS 1 H.P. DRIVE		

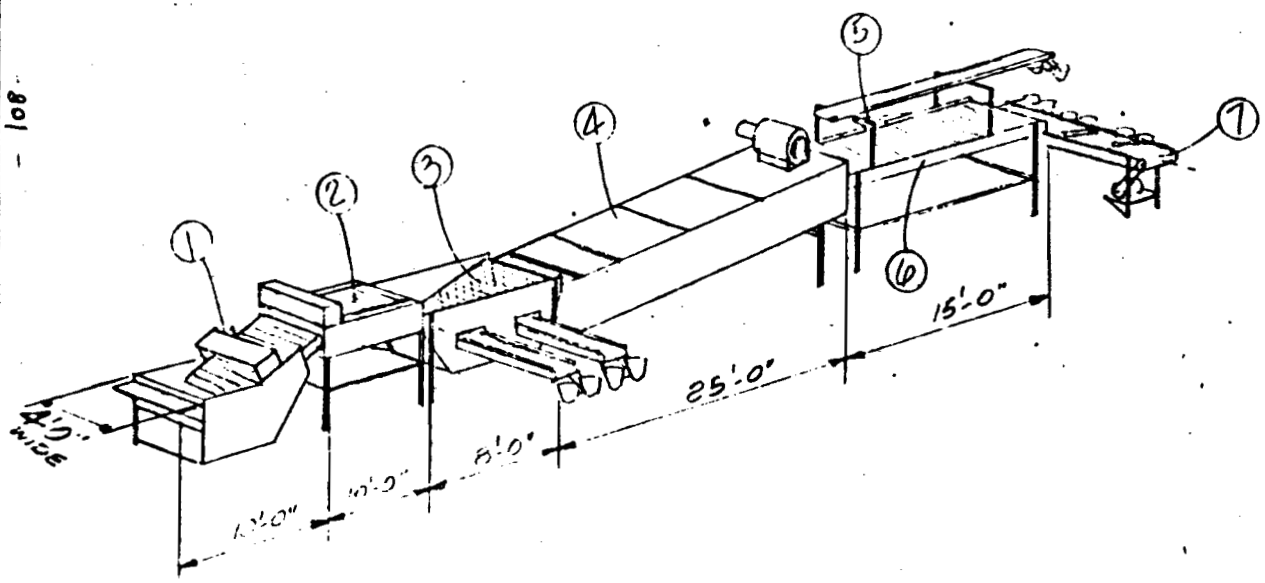

AUG 27 1981

PRELIMINARY
NOT FOR CONSTRUCTION

ALL DIMENSIONS ARE IN INCHES EXCEPT AS NOTED

REV	DESCRIPTION	DATE	BY

TOLERANCES UNLESS NOTED

FRACTION ± DECIMAL ±

SURFACE FINISH NOTE

UNLESS OTHERWISE SPECIFIED, ROUGHNESS HEIGHT ON ALL MACHINED SURFACES SHALL NOT EXCEED

√ MICRO-INCHES

Aeroglide® RALEIGH N.C. | PacRite® ORLANDO FLA

TITLE: A-2 POTATO LAYOUT 10,000 LB. PER HR.

BY	NAME	DATE
DR		
CHECK		
APPRO		7/9/81
SCALE		

5847-81-03

DRAWING NUMBER

B

BEST AVAILABLE COPY

ANNEX G.

Illustrative Equipment List: SWDM
($US Rounded)

All Costs Are Foreign Exchange Funded By AID

SWDM (4 SITES)	UNIT COST	TOTAL COSTS
12 (3 EA.) Ten-Ton Reefer Trucks	$ 50,000	$ 600,000
40 (10 EA.) 10-Ton Storage Bins	$ 3,100	$ 124,000
4 (1 EA.) 45-KW Diesel Generators	$ 12,500	$ 50,000
4,000 L.Ft.(1000 EA) Meat Rails & Hooks	56/L.F.	$ 224,000
4 (1 EA.) 165 BU/HR. Batch Dryer	$ 34,000	$ 136,000
16 (4 EA.) Manual Push-Type Fork Lifts	$ 2,500	$ 40,000
80 (20 EA.) Push Carts	$ 350	$ 28,000
80 (20 EA.) Platform Scales	$ 450	$ 36,000
4 (1 EA.) Misc. Maint. Tools & Office Equip.	$ 32,000	$ 128,000
		$ 1,366,000
Apare Parts @ 15%		$ 204,900
		$ 1,570,900
Shipping And Insurance @ 30%		$ 471,270
		$ 2,042,170
	ROUNDED	$ 2,042,200

B

ASSY NO. & QTY 05	04	03	02	01	ITEM NO.	DESCRIPTION	MAT'L SPEC	DWG ASSY OR ITEM NO
					1	36" PUMP & CYLINDER WASHER WITH 1 H.P. MOTOR AND CONSTANT SPEED DRIVE		
					2	36" CLEATED ELEVATOR W/ WOVEN WIRE 3/4 H.P. M&GSD		
					3	40" x 15'-0" TRIMMING TABLE WOVEN WIRE & GRADING SECTION W/ COMBINATION BAGGING OR BOXING WITH 3/4 H.P. & VARIABLE SPEED DRIVE.		
					4	DIP TANK & SLATTED ELEVATED		

QUANTITIES ARE FOR ONE UNIT

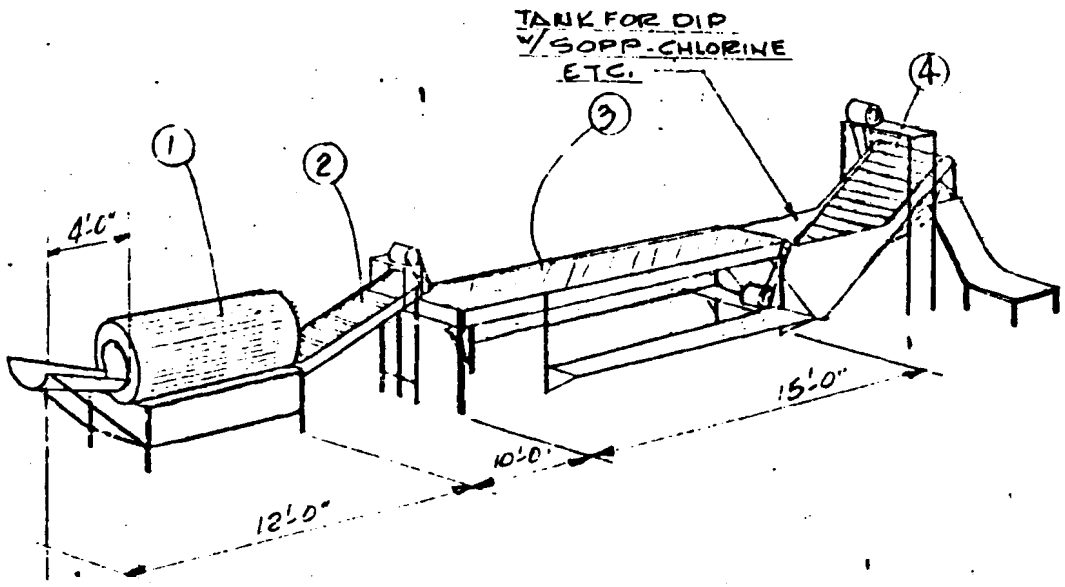

AUG 27 1991

PRELIMINARY
NOT FOR CONSTRUCTION

ALL DIMENSIONS ARE IN INCHES EXCEPT AS NOTED

REV	DESCRIPTION	DATE	BY

TOLERANCES UNLESS NOTED

FRACTION ± DECIMAL ±

SURFACE FINISH NOTE

UNLESS OTHERWISE SPECIFIED, ROUGHNESS HEIGHT ON ALL MACHINED SURFACES SHALL NOT EXCEED

√ MICRO-INCHES

Aeroglide® | PacRite®

RALEIGH N.C. ORLANDO, FLA

TITLE: A-1 YAM ROOT WASHER GRADER & BAGGER

BY	NAME	DATE
DR		
CHECK		
APPRO		9/10/91
SCALE —		

0847-2-9-01

DRAWING NUMBER

B

B

ASSY NO & QTY 05	04	03	02	01	ITEM NO	DESCRIPTION	MAT'L SPEC	DWG ASSY OR ITEM NO
					1	48" WIDE X 10'-0" ELEVATOR 1/4 SPRAY HOOD DUMP LEDGE 3/4 H.P. DRIVE		
					2	48" WIDE X 12'-0" BRUSH WASHER WATER ELIMINATOR 3 H.P. DRIVE		
					3	48" WIDE X 12'-0" BY PASS BELT 3/4 H.P. DRIVE		
					4	48" WIDE X 12'-0" BRUSH WAXER 3 H.P. AND 1/4 H.P. DRIVES		
					5	48" WIDE X 12'-0" BY PASS BELT 3/4 H.P. DRIVE		
					6	24" X 35'-0" LONG PACKING BELT WITH 32'-0" LONG BIN SECTION		1 1/2 H.P.

QUANTITIES ARE FOR ONE UNIT

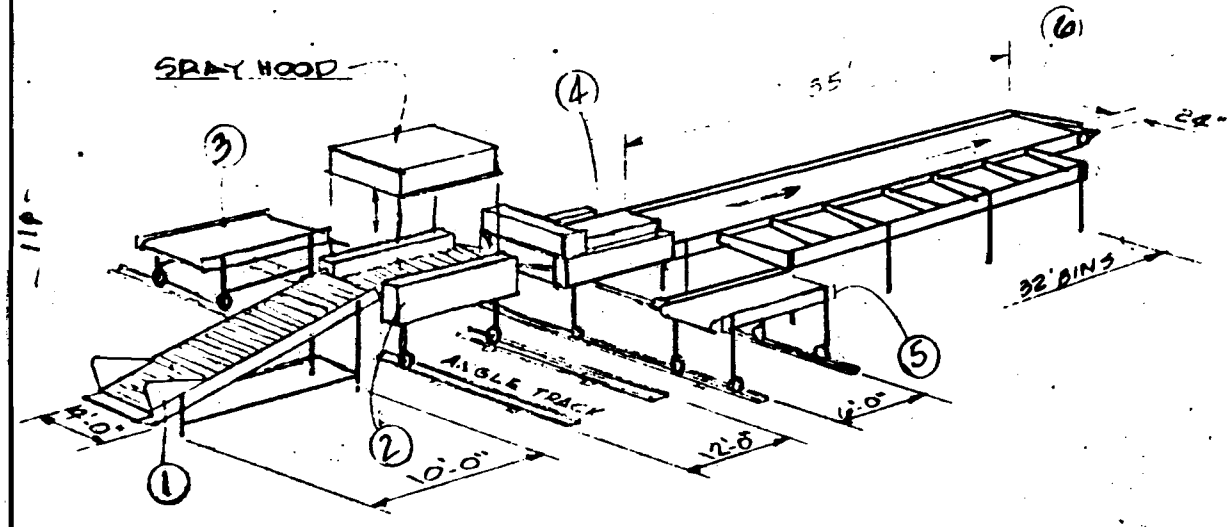

HAND SELECTION OF SIZE, OPTIONAL WAXING, OPTIONAL WASHING, DRY BRUSH

AUG 27 1981

PRELIMINARY
NOT FOR CONSTRUCTION

ALL DIMENSIONS ARE IN INCHES EXCEPT AS NOTED

REV	DESCRIPTION	DATE	BY

TOLERANCES UNLESS NOTED

FRACTION ± DECIMAL ±

SURFACE FINISH NOTE

UNLESS OTHERWISE SPECIFIED ROUGHNESS HEIGHT ON ALL MACHINED SURFACES SHALL NOT EXCEED √ MICRO-INCHES

Aeroglide RALEIGH N.C. | PacRite ORLANDO FLA

TITLE: A-3 CHKE PEPPER, ONION AVOCADO, MANGO, TOMATO ANY ROUND FRUIT OR VEG.

BY	NAME	DATE
DR	LS	7/1/81
CHECK		
APPRO		8/10/81
SCALE		

PB-47-581-03

DRAWING NUMBER

B

ANNEX H

RECOMMENDED SITES FOR

ASSEMBLING & GRADING STATIONS

PARISH	AREAS	NO. OF UNITS
Portland	Fellowship, Comfort Castle	2
St. Thomas	Golden Grove, Trinitiville, Yallahs	3
St. Catherine	Bushy Park, Old Harbour	2
St. Mary	Guy's Hill, Carron Hall, Lucky Hill	3
St. Ann	Douglas Castle, Cave Valley	2
Trelawny	Wait-a-bit	1
Clarendon	May Pen, Halse Hall, Ebony Park, Kellits	4
Manchester	South Manchester	2
St. Elizabeth	Southfield, Spring Ground, Hounslow, Bull Savannah	4
Westmoreland	New Market	1
Hanover	Cacoon Castle, Cascade	2
St. James	Adelphi, Maroon Town	2
	TOTAL NUMBER OF SITES	28

Economic Sensitivity Analysis (Regime I)

(000 Constant 1981 US$)

Year	Project Costs	Project Economic Cost PV at 11% P.A.	Project Economic Benefits	Project Benefits P.V. at 11% P.A.	Net Undiscounted Project Benefits
1981	1957	1957	--	--	(1957)
1982	4163	3750	--	--	(4163)
1983	8286	6725	--	--	(8286)
1984	13444	9830	2432	1778	(11012)
1985	5123	3375	14599	9617	9476
1986	4642	2755	30072	17846	25430
1987	4628	2473	49256	26334	44628
1988	4851	2337	59005	28420	54154
1989	5912	2566	62928	27306	57016
1990	5333	2085	64201	25098	58868
1991	5592	1969	65493	23066	59901
1992	5864	1861	66804	21196	60940
1993	6905	1974	68808	19096	61903
1994	6449	1661	70872	18251	64423
1995	6763	1569	74911	17379	68148

PV Costs 46,887 PV Benefits 235,387

$$B/C = \frac{235,387}{46,887} = 5.00$$

I.R.R. = 64%

ASSUMPTIONS USED IN SENSITIVITY ANALYSES

REGIME I

Year	Project Cost	Value of Projected Production	Cumulative Changes		
			Post Harvest Losses	Production	Distribution Cost
1981	+ 20%	-	-	-	-
1982	+ 20%	-	-	-	-
1983	+ 20%	-	-	-	-
1984	+20%	-	1	-	-
1985	+ 20%	-	3	-	3
1986	+20%	-	6	-	6
1987	+20%	-	8	3	8
1988	+20%	-	10	4	8
1989	+20%	-	10	5	8
1990	+20%	-	10	5	8
1991	+20%	-	10	5	8
1992	+20%	-	10	5	8
1993	+20%	-	10	5	8
1994	+20%	-	10	5	8
1995	+20%	-	10	5	8

Economic Sensitivity Analysis (Regime II)

(000 Constant 1981 US$)

Year	Project Costs	Project Economic Costs PV at 11% P.A.	Project Economics Benefits	Project Benefits PV at 11% P.A.	Net Undiscounted Project Benefits
1981	1957	1957	--	--	(1957)
1982	4163	3750	--	--	(4163)
1983	8286	6725	--	--	(8286)
1984	13444	9830	1702	1244	(11742)
1985	5123	3375	10219	6732	5096
1986	4642	2755	21050	12492	16408
1987	4628	2473	34479	18434	29851
1988	4851	2337	41304	19894	36453
1989	5912	2566	44050	19114	38138
1990	5333	2085	44941	17569	39608
1991	5592	1969	45845	16146	40253
1992	5864	1861	46763	14837	40899
1993	6905	1974	48166	13367	41261
1994	6449	1661	49610	12776	43161
1995	6763	1569	53012	12299	46249

PV Costs 46,887 PV Benefits 164,904

$$B/C = \frac{164,904}{46,887} = 3.5$$

I.R.R. = 36.6%

Assumptions Used in Sensitivity Analysis

Regime II

Year	Project Cost	Estimated Benefits	Cumulative Changes		
			Post Harvest Losses	Production	Distribution Costs
1981	+ 20%	- 30%	--	--	--
1982	+ 20%	- 30%	--	--	--
1983	+ 20%	- 30%	--	--	--
1984	+ 20%	- 30%	1	--	--
1985	+ 20%	- 30%	3	--	3
1986	+ 20%	- 30%	6	--	6
1987	+ 20%	- 30%	8	3	8
1988	+ 20%	- 30%	10	4	8
1989	+ 20%	- 30%	10	5	8
1990	+ 20%	- 30%	10	5	8
1991	+ 20%	- 30%	10	5	8
1992	+ 20%	- 30%	10	5	8
1993	+ 20%	- 30%	10	5	8
1994	+ 20%	- 30%	10	5	8
1995	+ 20%	- 30%	10	5	8

Economic Sensitivity Analysis (Regime III)

(000 Constant 1981 US $)

Year	Project Economic Costs	Project Economic Cost PV at 11% PA	Project Economic Benefits	Project Economic Benefits, Present Value @ 11%	Net Undiscounted Proj. Benefits
1981	1957	1957	--	--	(1957)
1982	4163	3750	--	--	(4163)
1983	8286	6725	--	--	(8286)
1984	13444	9830	2432	1778	(11102)
1985	5123	3375	7360	4848	2237
1986	4642	2755	12603	7480	7961
1987	4628	2473	18138	9697	13501
1988	4851	2337	21419	10317	16658
1989	5912	2566	21862	9487	15950
1990	5333	2085	22106	8642	16773
1991	5592	1969	22560	7945	16968
1992	5864	1861	23237	7373	17373
1993	6905	1974	23843	6712	16938
1994	6449	1661	24651	6348	18202
1995	6763	1569	25389	5890	18626

PV Costs 46,887 PV Benefits 86,517

$$B/C = \frac{86,517}{46,887} = 1.84$$

I.R.R. = 31.0%

Assumptions Used in Sensitivity Analysis

Regime III

Year	Project Cost	Projected Value of Production	Cumulative Changes		
			Post Harvest Losses	Production	Distribution Cost
1981	+ 20%				
1982	+ 20%				
1983	+ 20%				
1984	+ 20%		1		
1985	+ 20%		2		1
1986	+ 20%		3		2
1987	+ 20%		3	1	3
1988	+ 20%		3	2	3
1989	+ 20%		3	2	3
1990	+ 20%		3	2	3
1991	+ 20%		3	2	3
1992	+ 20%		3	2	3
1993	+ 20%		3	2	3
1994	+ 20%		3	2	3
1995	+ 20%		3	2	3

Economic Sensitivity Analysis (Regime IV)

(000 Constant 1981 US$)

Year	Project Economic Costs	Project Economic Costs P.V. at 11% P.A.	Project Economic Benefits	Project Economic Benefits P.V. at 11%	Net Undiscounted Project Benefits
1981	1957	1957	--	--	(1957)
1982	4163	3750	--	--	(4163)
1983	8286	6725	--	--	(8286)
1984	13444	9830	1945	1422	(11499)
1985	5123	3375	5725	3771	602
1986	4642	2755	10082	5983	5440
1987	4628	2471	14511	7758	9883
1988	4851	2337	17134	8253	12283
1989	5912	2566	17488	7589	11576
1990	5333	2085	17850	6978	12517
1991	5592	1969	18217	6416	12625
1992	5864	1861	18589	5898	12725
1993	6905	1974	19147	5473	12242
1994	6449	1661	19720	5078	13271
1995	6763	1569	20312	4712	13549

PV Costs = 46,887 PV Benefits = 69,331

$$B/C = \frac{69,331}{46,887} = 1.47$$

I.R.R. = 23.7%

Assumptions Used in Sensitivity Analysis

Regime IV

Year	Project Cost	Projected Value Of Production	Cumulative Changes		
			Post Harvest Losses	Production	Distribution Cost
1981	+ 20%	- 20%	-		-
1982	+ 20%	- 20%	-		-
1983	+ 20%	- 20%	-		-
1984	+ 20%	- 20%	1	-	-
1985	+ 20%	- 20%	2	-	1
1986	+ 20%	- 20%	3	-	2
1987	+ 20%	- 20%	3	1	3
1988	+ 20%	- 20%	3	2	3
1989	+ 20%	- 20%	3	2	3
1990	+ 20%	- 20%	3	2	3
1991	+ 20%	- 20%	3	2	3
1992	+ 20%	- 20%	3	2	3
1993	+ 20%	- 20%	3	2	3
1994	+ 20%	- 20%	3	2	3
1995	+ 20%	- 20%	3	2	3

Economic Sensitivity Analysis (Regime V)

(000 Constant 1981 US$)

Year	Project Economic Costs	Project Economic Cost PV at 11% PA	Project Economic Benefits	Project Economic Benefits PV at 11% PA	Net Undiscounted Project Benefits
1981	1957	1957	--	--	(1957)
1982	4163	3750	--	--	(4163)
1983	8286	6725	--	--	(8286)
1984	13444	9830	--	--	(13444)
1985	5123	3375	--	--	(5123)
1986	4642	2755	2581	1532	(2061)
1987	4628	2474	15483	8278	10855
1988	4851	2337	31260	15056	26409
1989	5912	2566	51818	22485	45906
1990	5333	2085	61382	23996	56049
1991	5592	1969	65494	23066	59902
1992	5864	1861	66804	21196	60940
1993	6905	1974	68810	19669	61905
1994	6449	1661	70872	18251	64423
1995	6763	1569	72997	16935	66234

PV Costs - 46,887 PV Benefits = 170,464

$$B/C = \frac{170,464}{46,887} = 3.62$$

I.R.R. = 40.0%

Assumptions Used in Sensitivity Analtsis

Regime V

Year	Project Cost	Projected Value of Production	Cumulative Changes		
			Post Harvest Losses	Production	Distribution Cost
1981	+ 20%	-	-	-	-
1982	+ 20%	-	-	-	-
1983	+ 20%	-	-	-	-
1984	+ 20%	-	-	-	-
1985	+ 20%	-	-	-	-
1986	+ 20%	-	1	-	-
1987	+ 20%	-	3	-	3
1988	+ 20%	-	6	-	6
1989	+ 20%	-	8	1	8
1990	+ 20%	-	10	2	8
1991	+ 20%	-	10	2	8
1992	+ 20%	-	10	2	8
1993	+ 20%	-	10	2	8
1994	+ 20%	-	10	2	8
1995	+ 20%	-	10	2	8

Economic Sensitivity Analysis (Regime VI)

(000 Constant 1981 US$)

Year	Project Economic Costs	Project Economic Costs PV at 11% PA	Project Economic Benefits	Project Economic Benefits PV at 11% PA	Net Undiscounted Project Benefits
1981	1957	1957	--	--	(1957)
1982	4163	3750	--	--	(4163)
1983	8286	6725	--	--	(8286)
1984	13444	9830	--	--	(13444)
1985	5123	3375	--	--	(5123)
1986	4642	2753	2063	1224	(2579)
1987	4628	2474	6526	3489	1898
1988	4851	2337	10695	5151	5844
1989	5912	2566	15268	6625	9356
1990	5333	2085	17849	6998	12516
1991	5592	1969	18391	6477	12799
1992	5864	1861	18589	5898	12725
1993	6905	1974	19146	5473	12241
1994	6449	1661	19721	5078	13272
1995	6763	1569	20313	4713	13550

PV Costs = 46,887 PV Benefits = 51,126

$$B/C = \frac{51,126}{46,887} = 1.08$$

I.R.R. = 12.98%

Assumptions Used in Sensitivity Analysis

Regime VI

Year	Project Cost	Projected Value of Production	Cumulative Changes		
			Post Harvest Losses	Production	Distribution Cost
1981	+ 20%	- 20%			
1982	+ 20%	- 20%			
1983	+ 20%	- 20%			
1984	+ 20%	- 20%			
1985	+ 20%	- 20%			
1986	+ 20%	- 20%	1		
1987	+ 20%	- 20%	2		1
1988	+ 20%	- 20%	3		2
1989	+ 20%	- 20%	3	1	2
1990	+ 20%	- 20%	3	2	2
1991	+ 20%	- 20%	3	2	2
1992	+ 20%	- 20%	3	2	2
1993	+ 20%	- 20%	3	2	2
1994	+ 20%	- 20%	3	2	2
1995	+ 20%	- 20%	3	2	2