PD-AAL-267

Project Authorization and Request for Allotment of Funds

Part II

ENTITY: Worldwide

PROJECT: Technical Assistance in Conventional Energy

PROJECT NUMBER: 936-5724

APPROPRIATION ACCOUNT: Selected Development Problems

A.I.D. grant financing is approved in the amount of up to $3,750,000. FY 1980 grant financing of $250,000 is authorized for the planning phase of this project. FY 1981 grant financing of $3,500,000 is authorized for the initial operating phase of this project.

Authorization of funding for the subsequent two years of the project is subject to thorough A.I.D. review of project performance.

SEP 1 6 1980

Sander Levin
Assistant Administrator
Bureau for Development Support

Clearances:

AFR/DR, L. Heilman		Date 9/5/80
ASIA/TECH, T. Arndt		Date 9/4/80
LAC/DR, M. Brown		Date
NE/TECH, E.K. MacManus		Date Sept 2-80
PPC/EY, S. Klein		Date Sept 6 80
DS/PO, B. Chapnick		Date 9/11/80

AGENCY FOR INTERNATIONAL DEVELOPMENT

PROJECT AUTHORIZATION AND REQUEST FOR ALLOTMENT OF FUNDS PART I

1. TRANSACTION CODE: A (A - ADD, C - CHANGE, D - DELETE)

PAF

2. DOCUMENT CODE: 5

3. COUNTRY/ENTITY: Worldwide

4. DOCUMENT REVISION NUMBER:

5. PROJECT NUMBER (7 digits): 936-5724

6. BUREAU/OFFICE: A. SYMBOL: DS/EY; B. CODE:

7. PROJECT TITLE (Maximum 40 characters): Technical Assistance in Conventional Energy

8. PROJECT APPROVAL DECISION — ACTION TAKEN: A (A - APPROVED, D - DISAPPROVED, DE - DEAUTHORIZED)

9. EST. PERIOD OF IMPLEMENTATION: YRS. 04 QTRS.

10. APPROVED BUDGET AID APPROPRIATED FUNDS ($000)

A. APPROPRIATION	B. PRIMARY PURPOSE CODE	PRIMARY TECH. CODE C. GRANT	PRIMARY TECH. CODE D. LOAN	E. 1ST FY ___ F. GRANT	E. 1ST FY ___ G. LOAN	H. 2ND FY ___ I. GRANT	H. 2ND FY ___ J. LOAN	K. 3RD FY ___ L. GRANT	K. 3RD FY ___ M. LOAN
(1) 106				250		3,500		4,500	
(2)									
(3)									
(4)									
TOTALS									

A. APPROPRIATION	N. 4TH FY 83 O. GRANT	N. 4TH FY 83 P. LOAN	Q. 5TH FY ___ R. GRANT	Q. 5TH FY ___ S. LOAN	LIFE OF PROJECT T. GRANT	LIFE OF PROJECT U. LOAN
(1)	5,500				13,750	
(2)						
(3)						
(4)						
TOTALS						

11. PROJECT FUNDING AUTHORIZED (ENTER APPROPRIATE CODE(S)) 1 = LIFE OF PROJECT, 2 = INCREMENTAL, LIFE OF PROJECT

A. GRANT	B. LOAN
2	-

C. PROJECT FUNDING AUTHORIZED THRU FY

12. INITIAL PROJECT FUNDING ALLOTMENT REQUESTED ($000)

B. ALLOTMENT REQUEST NO. ___

A. APPROPRIATION	C. GRANT	D. LOAN
(1) 106	250	
(2)		
(3)		
(4)		
TOTALS		

13. FUNDS RESERVED FOR ALLOTMENT

TYPED NAME (Chief, SER/FM/FSD)

SIGNATURE

DATE

14. SOURCE/ORIGIN OF GOODS AND SERVICES: 000 941 LOCAL OTHER ___

15. FOR AMENDMENTS, NATURE OF CHANGE PROPOSED

FOR PPC/PIAS USE ONLY	16. AUTHORIZING OFFICE SYMBOL	17. ACTION DATE MM DD YY	18. ACTION REFERENCE (Optional)	ACTION REFERENCE DATE MM DD YY

ACTION MEMORANDUM FOR THE ASSISTANT ADMINISTRATOR, DSB

DATE: September 9, 1980

FROM: DS/EY, Alan B. Jacobs

Problem: Your approval of the attached project paper, "Technical Assistance in Conventional Energy Resource Identification", is required. The proposed project would seek to enhance the indigenous conventional energy supplies of AID recipient countries by 1) improving the recipient countries' stock of information about the geological potential for energy resource within their borders, and 2) improving their ability to plan and manage a program for the exploration and development of such resources. The project would have a planning phase to begin in FY 1980, and a three-year operational life, assuming that an evaluation after the first operational year determines that the project should continue for two additional years. At this time, the following specific actions are requested:

1) Authorization to proceed with the project as described in the project paper;

2) Approval of AID grant financing of $250,000 in FY 1980 for the planning phase of the project, and $3,500,000 in FY 1981 for the initial operating phase of the project;

3) Approval to proceed with negotiation of a RSSA/PASA with the U.S. Geological Survey to permit the Survey to manage the planning phase of the project.

Discussion: This project has been developed in response to the increasingly obvious need of developing countries, particularly non-OPEC low-income countries, to enhance their domestic energy supplies in order to foster economic development and reduce dependence on expensive imported sources of supply. The proposed project would implement a Congressional directive, contained in Section 106 of the Foreign Assistance Act, as amended, to "Facilitate geological and geophyscial survey work to locate potential oil, natural gas, and coal reserves and to encourage exploration for potential oil, natural gas, and coal resources in developing countries ...." The project will complement a companion AID project in "Training for

Conventional Energy Development", as well as the assistance activities of the World Bank, the United Nations system and the Inter-American Development Bank. It will also encourage private-sector investment in conventional energy exploration and development in AID recipient countries.

Specific project activities seek to implement three overall project purposes:

a) To expand the quantity and quality of available information about the geological potential for LDC indigenous fuel resources;

b) To help AID recipient countries develop the institutional mechanisms and the technical capability needed to identify and develop their energy resources;

c) To supplement these emerging indigenous capabilities with limited direct applications of U.S. expertise and technology to help plan, organize and implement national programs of conventional energy exploration.

Technical assistance provided under the project will include the following activities:

a) Reviewing, at the country level, what is now known about the conventional energy resources of the country.

b) Filling gaps in the basic elements of geological information, particularly the development of geological maps and satellite images that can be used to identify areas for energy resource exploration.

c) Processing and interpreting existing raw geological/geophysical data that have either not been interpreted previously or have been interpreted under conditions that have failed to provide the country with the maximum amount and best quality of information.

d) Assisting the host country in developing a comprehensive energy resource exploration strategy.

e) Evaluating the country's existing manpower and institutional capabilities in the conventional energy field and making recommendations for strengthening those capabilities.

f) Providing assistance in the organization, management, technical personnel training and operation of government entities involved in energy resource exploration, development and production.

g) Conducting new geophysical field work, such as remote sensing studies, magnetic or gravity studies, and seismic surveys.

The project paper was reviewed on July 29, 1980 by the Energy Coordinating Group. As a result of suggestions made at that meeting, a number of revisions and clarifications have been made in the final version of the paper, dated August 12, 1980, which is attached to this memo. The final project paper differs from the draft in that it:

1) Calls for competitive proposals to obtain a management contractor, beginning with an RFP to be issued in November 1980.

2) Mandates a first-phase study -- to be called the Needs and Targets Study and carried out primarily by the U.S. Geological Survey -- that will carefully examine the AID recipient countries in light of the selection criteria outlined in the paper. The paper spells out in some detail the kinds of information that will be gathered for each country in order to rank candidates for assistance under this project. The study will begin almost immediately after project approval under a PASA arrangement with USGS, and will be completed by April 30, 1981.

3) Limits the operational life of the project to three fiscal years (FY 1981-83) with a total budget of $13.5 million, plus a start-up FY 1980 allocation of $250,000 for the USGS PASA to fund the Needs and Targets Study.

4) Makes clear the fact that the project budget will permit field assistance in resource identification to only a few countries each year. The paper envisions three country-level sub-projects in FY 1981, three more in FY 1982, and four more in FY 1983.

5) Makes explicit the fact that remote sensing will be an important component of exploration activities funded under the project.

6) Clarifies the differences between this project and the fossil fuel program of the World Bank (i.e., AID's project is limited to low-income, non-OPEC AID countries; AID supports only pre-drilling exploration activities; AID includes remote sensing; AID funds are in the form of grants; and AID will consider broad selection criteria in addition to geological promise, thereby taking on higher levels of uncertainty, in order to assist countries that currently lack exploratory data needed to meet IBRD's eligibility requirements).

The revised project paper has been circulated to and cleared by the Regional Bureaus and PPC, with the following conditions:

Asia Bureau requested clarification of a few points and revision of the wording of the project's statement of goals on page 24 of the PP. (See attached memo of September 2 from Robert Ichord to Jerome Bosken.) We have provided the clarifications requested in a September 3rd reply memo (also attached) and have revised the goal statement, as indicated in our memo and on page 24, as revised (attached).

Africa Bureau requested further information on the relationships among DS/EY, USGS and the contractor as they relate to project management. This memo will serve to provide that information.

USGS's involvement with the project will begin as soon as a PASA is signed. The Survey's initial task will be to manage and conduct the Needs and Targets Study, as described in the PP. The Office of International Geology of USGS will designate a project manager who will report directly to the conventional energy specialist within DS/EY, who will serve as project manager here. It is expected that USGS will continue to provide specialized services to the project after completion of the study; possible USGS activities are listed on page 54 of the PP. USGS will continue to report directly to DS/EY's project manager, who will ensure that USGS activities and the activities of the project contractor are properly coordinated and responsive to AID's needs and project goals. The DS/EY project manager will hold regular meetings with USGS and contractor personnel together to monitor their activities and guarantee regular communication among all major project participants.

Latin American Bureau will be looking for a critical examination, during the initial stages of the project, of the merits of technical assistance to improve the organization and management of official entities involved in energy exploration and production, versus other uses of project funds, as contemplated in the PP, which may be of higher priority.

Recommendation: That you signify your approval of the project paper and the RSSA/PASA at the appropriate point on this action memo, and that you approve the PAF (attached) authorizing grant financing of $250,000 in FY 1980 and $3,500,000 in FY 1981.

Approved: _____

Disapproved: _____

Date: SEP 16 1980

Attachments:

1. Project Paper
2. Ichord - Bosken Memo dated 8/2/80
3. Jacobs - Ichord Memo dated 8/3/80
4. Project Goal Statement (PP, page 24)
5. PAF

936572400420 1

AGENCY FOR INTERNATIONAL DEVELOPMENT

PROJECT PAPER FACESHEET

1. TRANSACTION CODE: C (A = ADD, C = CHANGE, D = DELETE)

PP

2. DOCUMENT CODE: 3

3. COUNTRY ENTITY: Worldwide

4. DOCUMENT REVISION NUMBER:

5. PROJECT NUMBER (7 digits): 936-5724

6. BUREAU/OFFICE: A. SYMBOL: DS/EY; B. CODE:

7. PROJECT TITLE (Maximum 40 characters): Technical Assistance in Conventional Energy

8. ESTIMATED FY OF PROJECT COMPLETION: FY 83

9. ESTIMATED DATE OF OBLIGATION: A. INITIAL FY 80; B. QUARTER 4 (Enter 1, 2, 3, or 4); C. FINAL FY 83

10. ESTIMATED COSTS ($000 OR EQUIVALENT $1 =)

A. FUNDING SOURCE	FIRST FY B. FX	FIRST FY C. L/C	FIRST FY D. TOTAL	LIFE OF PROJECT E. FX	LIFE OF PROJECT F. L/C	LIFE OF PROJECT G. TOTAL
AID APPROPRIATED TOTAL						
(GRANT)	(250)	( )	(250)	(13,750)	( )	( )
(LOAN)	( )	( )	( )	( )	( )	( )
OTHER U.S. 1.						
OTHER U.S. 2.						
HOST COUNTRY						
OTHER DONOR(S)						
TOTALS						

11. PROPOSED BUDGET APPROPRIATED FUNDS ($000)

A. APPROPRIATION	B. PRIMARY PURPOSE CODE	PRIMARY TECH. CODE C. GRANT	PRIMARY TECH. CODE D. LOAN	E. 1ST FY 80 F. GRANT	E. 1ST FY 80 G. LOAN	H. 2ND FY 81 I. GRANT	H. 2ND FY 81 J. LOAN	K. 3RD FY 82 L. GRANT	K. 3RD FY 82 M. LOAN
(1)				250		3,500		4,500	
(2)									
(3)									
(4)									
TOTALS									

A. APPROPRIATION	N. 4TH FY 83 O. GRANT	N. 4TH FY 83 P. LOAN	Q. 5TH FY ___ R. GRANT	Q. 5TH FY ___ S. LOAN	LIFE OF PROJECT T. GRANT	LIFE OF PROJECT U. LOAN
(1)	5,500				13,750	
(2)						
(3)						
(4)						
TOTALS						

12. IN-DEPTH EVALUATION SCHEDULED: MM ; YY 84

13. DATA CHANGE INDICATOR. WERE CHANGES MADE IN THE PID FACESHEET DATA, BLOCKS 12, 13, 14, OR 15 OR IN PRP FACESHEET DATA, BLOCK 12? IF YES, ATTACH CHANGED PID FACESHEET.

1 = NO
2 = YES

14. ORIGINATING OFFICE CLEARANCE

SIGNATURE

TITLE

DATE SIGNED: MM DD YY

15. DATE DOCUMENT RECEIVED IN AID/W, OR FOR AID/W DOCUMENTS, DATE OF DISTRIBUTION: MM DD YY

AID 1330-4 (3-76)

PROJECT PAPER

PROJECT 936-5724

TECHNICAL ASSISTANCE IN

CONVENTIONAL ENERGY RESOURCE IDENTIFICATION

Office of Energy
August 12, 1980

PROJECT PAPER

PROJECT 936-5724

TECHNICAL ASSISTANCE IN

CONVENTIONAL ENERGY RESOURCE IDENTIFICATION

CONTENTS

	Page
Part I - SUMMARY	1
A. Recommendation	1
B. Summary Project Description	1
C. Summary Findings	3
1. Technical	3
2. Economic	3
3. Social	3
4. Environmental	3
5. Financial	3
D. Issues	4
PART II - PROJECT BACKGROUND AND DETAILED DESCRIPTION	5
A. Background	5
1. Oil and Natural Gas Potential and Constraints	7
2. Coal Potential and Constraints	11
3. Legislative Mandate	17
4. Needs Unmet by Existing Conventional Fuels Assistance Programs	19
B. Detailed Project Description	23
1. Goal	24
2. Strategy	24
3. Selection of Participating Countries and Activities	25

PART III - PROJECT ANALYSIS 33

A. Technical Analysis 33

B. Economics 37

C. Social Analysis 45

D. Environmental Analysis 46

E. Financial Analysis, Plan and Budget 51

PART IV - IMPLEMENTATION PLANNING 53

A. Administration Arrangements 53

B. Implementation Plan 58

C. Evaluation Plan 60

APPENDIX

Logical Framework Matrix

PART I. SUMMARY

A. Recommendation

DS/EY recommends approval of the Project in Conventional Energy Resource Identification, beginning with a planning phase of $250,000 in FY 1980, moving into the operational phase with a budget of $3.5 million in FY 1981, and extending through FY 1983 with a total life-of-project cost of $13.75 million. We recommend also that a qualified organization be selected through limited competitive bidding to manage the project and that a contract be concluded with the management entity at the earliest possible date. We also recommend that a RSSA/PASA be concluded with the U.S. Geological Survey to enable the Survey to provide AID with limited specialized assistance under the project. Finally, we recommend the establishment of an advisory committee composed of representatives from private industry, government and academia to provide expert advice to this project.

B. Summary Project Description

Like other technical assistance projects, Project 936-5724 -- Technical Assistance in Conventional Energy Resource Identification -- is aimed at helping developing countries help themselves in an area that is extremely important to their overall development progress. As part of the broad energy assistance program, the project will have as its goal the gradual development of indigenous energy resources and energy-related capabilities to enable recipient countries to meet their energy needs and alleviate their heavy dependence on expensive imported sources of energy. More specifically, by improving the recipient countries' stock of information about the geological potential for energy resources within their borders, and by improving their ability to plan and manage a program for the exploration and development of such resources, AID will help these countries mobilize the capital and technical expertise necessary to increase their domestic supplies of conventional energy.

For purposes of this project, the term "conventional energy" is defined to include all geological energy resources except uranium -- that is, fossil fuels (oil, natural gas, coal and peat) that are extractable with proven and widely available technologies, as well as geothermal energy and other resources (such as oil shale and tar sands) that may be extractable with technologies now under development and/or commercialization. The project's major emphasis, however, will be on oil, natural gas and coal.

Technical assistance provided under the project will include the following activities:

a) Reviewing, at the country level, data indicating what is now known about the conventional energy resources of the country.

b) Filling gaps in the basic elements of geological information, particularly the development of geological maps that can be used to identify areas for energy resource exploration.

c) Processing and interpreting existing raw geological/geophysical data (e.g., magnetic tapes, aerial photos, maps, satellite images, etc.) that either have not been interpreted previously or have been interpreted under conditions that have failed to provide the country with the maximum amount and best quality of information.

d) Assisting the host country in developing a comprehensive energy resource exploration strategy.

e) Evaluating the country's existing manpower and institutional capabilities in the conventional energy field and making recommendations for strengthening those capabilities.

f) Providing assistance in the organization, management, technical personnel training and operation of government entities involved in energy resource exploration, development and production.

g) Conducting new geological and geophysical field work, such as magnetic or gravity studies and seismic surveys, and gathering new data through remote sensing techniques such as Landsat satellite photography and aerial photo-geology, and conducting related interpretive analysis.

Upon project approval, AID Missions will be informed about the project and will be asked to assist AID/W in an evaluation of needs and targets for project activities. The core of the evaluation will be a major study to be undertaken by the U.S. Geological Survey under the direction of DS/EY. The study will consider candidate countries in light of the country selection criteria spelled out in this project paper, as well as any additional criteria that appear to be appropriate.

Funding under this project, while generous compared with AID projects in some fields, is severely constrained relative to the cost of doing business in the field of conventional energy resource exploration. This means that activities will be concentrated in only a few countries each year. If these limited activities are to have significant impact and to help achieve the goal of attracting new investment in conventional energy resource exploration and production, the activities and the countries in which they are to be undertaken must be selected with care. It is recognized, however, that this project deals with a field in which high levels of uncertainty and risk exist, due to the low level of exploration that has occurred to date in most AID recipient countries. Our analysis of best opportunities, therefore, may not always point us in the direction of the"surest bet" to find oil, gas and coal. AID's willingness to share the risk of gathering data in heretofore unexplored areas is a distinguishing feature of this project, as opposed to projects undertaken by the World Bank and private sector investors.

C. Summary Findings

1. Technical

Inadequate technical capabilities in manpower, institutions and technologies constrain conventional energy exploration and development in the developing countries. This project will assist AID recipient nations in overcoming those technical constraints. Recent technological advances in conventional energy exploration will be of considerrable benefit to exploratory efforts in LDCs.

2. Economic

Drastic increases in the price of oil in recent years have created new needs and new incentives to explore for indigenous energy resources in developing countries. LDCs may well benefit from development of even small deposits of oil, gas or coal. On the other hand, the economic interests of private oil companies often work at cross purposes with the interests of the countries, and serve as disincentives to exploration. This project will respond to the economic needs and interests of the recipient countres and will seek to advance exploration to a point where private investors can be attracted. AID will, in short, bear some of the economic risk involved in the early phases of exploration.

3. Social

The project will have little or no direct social impact on the recipient countries. If indigenous energy supplies are eventually produced, however, that result will bring important benefits to developing country populations, including women.

4. Environment

Most project activities will involve expert consultancies or remote data-gathering activities which will produce no environmental impacts. Geophysical field studies will produce only very minor and temporary impacts; therefore, no further environmental assessment or environmental impact statement is required. Eventual energy development and production may produce significant environmental impacts, however, and work under this project will include advice and assistance in planning for and managing those impacts.

5. Financial

The project will begin in FY 1980 with a start-up study of Conventional Energy Assistance Needs and Targets, to be carried out by the U.S. Geologiccal Survey and funded under a RSSA/PASA of $250,000. The operational phase of the project is projected to have a three-year life, from FY 1981 through FY 1983, with annual budgets of $3.5 million (FY 1981), $4.5 million (FY 1982) and $5.5 million (FY 1983), for a total life-of-project cost of $13,750,000.

Within those obligations, the RSSA/PASA with the U.S. Geological Survey will be funded at levels that allow for 10% inflation each year. This means that USGS' portion of the project budget will be $275,000 in FY 1981, $302,500 in FY 1982, and $330,250 in FY 1983.

D. Issues

1. Can a highly technical project, involving unusually varied needs for specialized expertise and equipment, as well as potential activity sites throughout the developing world, be managed efficiently by AID and its contractor, in light of current US government constraints on budgets, personnel, travel, and flexibility in contracting and procurement?

2. Can AID personnel, in Washington and in the field missions, work effectively and receptively with the project to integrate it into AID's overall program of energy assistance, which has heretofore emphasized renewable, rural and small-scale energy technologies?

3. Can AID serve as an effective advocate for the energy-related economic needs and interests of the recipient countries, while making use of the technical capabilities of private American companies and consultants in the conventional energy field?

PART II - PROJECT BACKGROUND AND DETAILED DESCRIPTION

A. Background

The consumption of commercial energy in general, and fossil fuels in particular, is low in absolute terms in developing countries. Yet the relative importance of commercial sources of energy to many developing economies has been underscored by their recent energy-related difficulties. Most developing countries experience a high share of oil (mostly imported) in total commercial energy use. This dependence makes many countries susceptible to problems such as high debt ratios and balance-of-payments deficits; slow GDP growth; deferrals of government expenditures on social programs intended to provide for basic needs; under-utilization of capacity in the industrial, transportation and electric power sectors; constraints on agricultural output; increased unemployment; and inadequate allocation of capital to growth-producing savings and investment.

Among the important facts about energy (and oil) in developing countries are figures indicating that non-OPEC developing countries account for:

* 12% of world energy consumption;

* 15% of world oil consumption;

* 19% of gross world oil imports; ... on the demand side

* 8% of current world oil production; and

* 4% of proven world oil reserves ... on the supply side

A recent World Bank report estimates that in 1980 the non-OPEC oil-importing developing countries will produce 1.7 million barrels per day of oil, 0.9 MBDOE of natural gas, and 2.2 MBDOE of coal. To meet projected 1990 demand without increasing import dependence, IBRD reports that these figures must rise to 3.3 MBD (oil), 1.2 MBDOE (gas) and 3.1 MBDOE (coal).

Among the non-OPEC developing countries, oil represents nearly two-thirds (65%) of all commercial energy consumption, compared with just over half (51%) in the industrial countries. Non-OPEC developing countries import 60% of their oil, and excluding the non-OPEC oil exporters raises this percentage to 83%.

The successive rounds of increases in world oil prices have had severe impacts on the developing areas. Impacts of the 1979-80 round of increases on the non-OPEC LDCs are not yet documented, but they can be expected to exacerbate difficulties arising out of the 1973-74 quadrupling of prices. Those difficulties included:

* A near quadrupling in dollar value of mineral fuel imports (from $9.6 U.S. billion in 1973 to $33.3 billion in 1976) and a near-doubling in the share in fuel imports in total imports (from 12.2% in 1973 to 23.1% in 1976).

* A doubling of non-OPEC LDCs' aggregate current account deficit (from $10.9 billion in 1973 to $22.0 billion in 1977).

* A sharp increase in the average national inflation rate (from 22.1% in 1973 to 31.5% in 1977).

* A decline in the average growth of real GDP for non-oil producing LDCs (from 7.3% in 1973 to 4.9% in 1977).

* A doubling in total levels of net external borrowing (from $10.4 billion in 1973 to $21.9 billion in 1977) and an increase of 240% in borrowing from private sources (from $4.8 billion in 1973 to $11.9 billion in 1977).

In 1980, the non-OPEC LDCs are expected to pay $50 billion for oil imports from OPEC countries. Much of this expense will be covered by borrowing from both official and private sources that could otherwise provide that capital for development purposes.

Most developing countries are currently experiencing energy consumption growth rates that outstrip their rates of economic growth. The transition from a predominantly agricultural economy to a structure of mixed output is usually accompanied by high income-elasticities of energy demand and by shifts from traditional to commercial fuels, with the result that commercial energy use grows rapidly, especially in the early phases of economic development.

Future goals and anticipated trends for developing countries include projections for continued economic and population growth; increased industrial activity and rapid urbanization; increased requirements for food production; and environmental limits on supplies of non-commercial energy. These trends indicate that LDCs will require increased quantities of fossil energy in the years to come, perhaps reaching levels of 25% of total world commercial energy demand by 1990 and 30% by 2000, as the 1979 Workshop on Alternative Energy Scenarios (WAES) has projected.

Many countries and international donors are working to alleviate the energy problems of less developed nations. Most experts agree that a comprehensive energy program for developing countries must include at least two major elements:
1) activities to develop indigenous energy resources, including new and renewable as well as conventional resources; and 2) efforts to improve the efficiency of energy use in both traditional (non-commercial) and

commercial resources. Taken together, these two activity categories can do much to meet future energy demands of developing countries and minimize their dependence on expensive foreign sources.

This project encompasses only the conventional side of indigenous resource development; other AID projects address the development of new and renewable sources and the promotion of energy efficiency. A companion AID project will complement the project by providing host country nationals with long-term academic scientific and technological training in fields related to conventional energy development.

In order to assess the prospects for future fossil fuel development in non-OPEC developing countries, and in particular in the countries receiving AID development and economic support assistance, it is necessary to consider current knowledge about geological potential, as well as non-geological constraints on oil, gas and coal exploration and development. Following a discussion of those points, this section will review AID's legislative mandate for conventional fuels assistance, summarize existing non-AID programs in the field, and consider what AID can do through this project to accelerate conventional fuel exploration.

1. Oil and Natural Gas Potential and Constraints

Given the high degree of uncertainty about the world's potential for discovery and development of new supplies of oil and natural gas, it is not surprising that experts' estimates of ultimately recoverable global resources, including already discovered reserves, cover a wide range -- from 1.6 to 6.5 trillion barrels. To estimate future discoveries, the World Energy Conference in 1977 polled 28 experts and arrived at a consensus estimate of 1,000 billion barrels, or about 40 years' supply, on a global basis. The developing countries' share of share of future discoveries is even more speculative, because experts do not even agree on the relative importance of various positive and negative factors relating to LDC fossil fuel potential. Optimists point out that non-OPEC developing countries contain about 40% of the geologically promising sedimentary basins, that these basins have undergone very little exploration compared with basins in OPEC countries and developed areas, and that success rates have been good in those few areas where exploration has taken place. If exploratory efforts can be redirected into these areas, the optimists argue, discoveries in LDCs should be comparable to their share of promising structures, or as much as 40% of new finds. Furthermore, state the optimists, rising international oil prices increase the quantity of resources in small fields that can be recovered economically.

Other experts, taking a more pessimistic view, argue that the most promising areas have already been explored, that all the "giant" and "super-giant" fields have already been discovered, and that currently producing basins can be expected to provide as much as 60% of future discoveries as well. Furthermore, the pessimists argue, the prospective areas in non-OPEC LDCs present problems of high cost, remote locations, lack of infrastructure, harsh environments, advanced technological

requirements (as in deep-water offshore areas), high risk, and political uncertainty -- all of which reduce return on investment. If private investors expect no giant oil fields to be found, these factors will almost certainly inhibit exploratory efforts.

Representing the optimistic extreme, Bernardo Grossling (formerly of the U.S. Geological Survey, now with the Inter-American Development Bank) estimates the undiscovered resources of the non-OPEC countries to be in a range of 628 to 2,318 billion barrels, or approximately one-half of his projection for all future discoveries in the world -- a fraction roughly comparable to the developing world's share of sedimentary basins with indications for possible petroleum resources. Reporting a viewpoint on the opposite extreme, unpublished data prepared by the U.S. Department of Energy puts the pessimistic view of non-OPEC developing countries' oil and gas reserves from future discoveries at only 25 billion barrels, or production of 2.5 million barrels per day for a decade.

A 1975 study commissioned by the World Bank concluded that out of 70 developing countries surveyed, 23 (including 9 current producers) have prospects of finding "high" or "very high" quantities of oil (750 to over 1500 million barrels), and another 15 countries (including two current producers) have prospects of finding "fair" quantities of oil (100-750 million barrels). The World Bank study grouped the countries into four categories:

A) Current oil and gas producers (both net exporters and net importers);

B) Countries with proven oil and gas reserves and announced commercial discoveries, but no production as yet;

C) Countries with no production and no commercial discoveries to date, but with favorable geological prospects for oil and gas deposits;

D) Countries with unfavorable prospects (based on current knowledge) for oil and gas discoveries.

Those countries studied in the IBRD survey that are also AID assistance recipients in FY 1980 or FY 1981 are shown, by category, in Table 1. It must be emphasized, however, that the evaluation of prospects for finding oil or gas is based on very limited exploratory efforts and sketchy data. A country's designation as an "unfavorable prospect" usually reflects a lack of information, rather than the existence of unfavorable information. New exploration can often alter a country's prospects dramatically.

Table 2 shows proven oil and gas reserves and 1979 production levels for those AID recipient countries that have known hydrocarbon deposits.

Table 1

WORLD BANK SURVEY OF

OIL AND GAS PROSPECTS IN NON-OPEC LDCs*

	Group A	Group B	Group C	Group D
AFRICA	Zaire	Burundi Chad Rwanda Tanzania Cameroon	Benin Gambia Ghana Guinea Bissau Guinea Mali Niger Senegal Sierra Leone Somalia Togo	Botswana Kenya Lesotho Upper Volta Mauritius Malawi Zambia
LATIN AMERICA AND CARIBBEAN	Peru Bolivia	Guatemala	Jamaica Guyana Paraguay Dominican Republic Costa Rica Panama El Salvador Honduras Haiti	
ASIA	Bangladesh Burma India	Philippines Thailand	Sri Lanka	Nepal
NEAR EAST	Syria Tunisia Egypt Morocco		Jordan Yemen AR	

*As reported for AID assistance recipient countries

Note: See text for explanation of categories.

Table 2

PROVEN OIL AND GAS RESERVES

AND 1979 OIL PRODUCTION FOR CURRENT PRODUCERS

AMONG AID RECIPIENT COUNTRIES

	Country	Est. Proven Reserves Oil (000 Bbls)	Gas (TCF)	Est. 1979 Production (000 B/D)
AFRICA	Cameroon	140,000	--	32.0
	Ghana	7,000	--	3.5
	Zaire	135,000	--	21.0
ASIA	Bangladesh		8,000	
	Burma	25,000	135	30.0
	India	2,600,000	9,300	240.0
	Indonesia*	9,600,000	24,000	1,600.0
	Philippines	25,000	--	15.0
	Thailand	--	8,000	--
LATIN AMERICA	Bolivia	150,000	5,400	30.0
	Ecuador*	1,100,000	4,000	220.0
	Guatemala	16,000	--	1.6
	Peru	655,000	1,100	195.0
NEAR EAST	Egypt	3,100,000	3,000	500.0
	Morocco	100	25	.5
	Spain	150,000	2,000	15.0
	Syria	2,000,000	1,500	165.0
	Tunisia	2,250,000	6,000	105.0
	Turkey	125,000	500	56.0

* = OPEC Member

Source: Oil and Gas Journal

The constraints that are preventing full exploration of geological structures in non-OPEC LDCs are numerous, only some of them can be addressed through this project. Constraints may be grouped into technical, economic, institutional and political areas. Technical constraints include a lack of knowledge about resource potential and a lack of technical expertise in developing countries. The most notable economic barriers are the high costs of exploration, estimated at four to five times higher in remote areas of developing countries than in North America; the unfavorable economics (from private investors' viewpoints) of small discoveries with little or no export potential; and the U.S. tax treatment of unproductive exploratory efforts. Among the most prominent institutional problems are the mutual mistrust and perceived divergence of interests that increasingly affect negotiations between host country governments or national oil companies on one hand, and international oil companies on the other. In situations of high geological uncertainty, host countries often want only to contract for initial exploratory services and leave royalty arrangements for a time when the resource potential is better known, while international oil companies prefer to set the terms of eventual exploitation in advance. Closely related to these problems is the obstacle of political risk, with private companies fearing expropriation and host governments seeking to retain maximum leverage over their resources by withholding prime acreage. Finally, many promising areas are closed to exploration by offshore boundary disputes, political problems (e.g., offshore Vietnam) and human rights problems.

This project can be of greatest assistance in overcoming the technical constraints -- the lack of good information about resource potential and the lack of technical expertise in the developing countries with geological potential. In addition, it may be possible through institutional support and information-gathering to raise levels of confidence and trust between host countries and private foreign investors, giving both parties more tenable negotiating positions and more incentive to proceed with exploratory efforts. Finally, by assuming some of the financial risk involved in the earliest and most speculative stages of geological exploration, the project may facilitate host country expenditures or foreign investment for further exploratory work, including actual drilling.

2. Coal Potential

Developing countries produced only 6.3% of the world's total coal production in 1977. LDCs account for only 2% of known global geological coal resources and 10% of technically and economically recoverable coal reserves. Furthermore, the known Third World coal deposits are highly concentrated in only a few countries. India, by far the largest current coal producer among the developing countries, possesses about one-quarter of all LDC geological coal resources and just over half of all LDC technically and economically recoverable coal reserves. Botswana, currently only a small producer, has the largest potential for future coal development among the LDCs, with 43% of geological coal resources in the

group. But many more countries have known small-scale deposits; approximately 50 have geological coal resources, and 30 are current producers, although only 11 (and only 3 AID recipient countries) produce more than a million tons per year. Table 3 shows coal resources and reserves for AID recipient countries, and Table 4 gives 1977 production figures for the same countries.

Coal development could alleviate the energy and foreign exchange problems of developing countries in a number of ways. Some countries could substitute indigenous coal directly for imported oil, particularly in electric power generation and in industry. Oil-exporting countries could increase their exports by substituting coal for oil in domestic markets. Some countries may be able to develop coal export markets. Still other could benefit from a diversified (and possible less expensive) supply of imported energy by substituting imported coal for imported oil.

A number of impediments stand in the way of LDC coal development. There has been little systematic exploration for coal in developing countries, and equally little analysis of identified deposits to determine their economic and technical recoverability. Even those countries with substantial known deposits have done little about their extraction because they have focused instead on development of primary metals that -- unlike coal -- have offered a promising export market. Coal exports from LDCs have been limited to metallurgical coal, since developed countries have had ample supplies of steam coal. LDC domestic commercial energy needs have been met for the most part with historically inexpensive imported oil, although recent price increases have obviously changed the economics in favor of coal. Long lead times, expensive infrastructure requirements, small deposits in remote locations with unfavorable economics, insufficient access to coal technology and expertise -- all these factors have constrained coal exploration and development in developing countries. But the most significant constraints of all, according to the World Bank, are the lack of basic geological data about coal resources and the lack of feasibility studies and adequately prepared coal development projects. In a 1979 report, the World Bank noted:

> "At present, the lack of geological data and the lack of a pipeline of coal projects ready for implementation represent the main impediments to a rapid short and medium-term coal production expansion in developing countries. Widespread coal resource endowments appear to exist in LDCs, however, and in the long run this important supply constraint could be overcome if LDC Governments and international mining companies are prepared to accelerate investment in coal exploration and feasibility work."

World Bank, Coal Development Potential and Prospects in the Developing Countries, October 1979, p. 19

TABLE 3

COAL RESOURCES AND RESERVES (MMTCE)

AND EXPLORATION STATUS (LOW, MED, HIGH)

AID RECIPIENT COUNTRIES

Country	Geological Resources	Technically & Economically Recoverable Reserves	Degree of Exploration
Africa			
Benin	--	--	L
Botswana	100,000	3,500	L-M
Burundi	--	--	L
Cameroon	500	--	M
Cape Verde	--	--	L
Chad	--	--	L
Djibouti	--	--	L
Gambia	--	--	L
Ghana	--	--	L
Guinea	--	--	L
Guinea-Bissau	--	--	L
Kenya	--	--	L
Lesotho	--	--	L
Liberia	--	--	L
Malawi	14	--	M
Mali	--	--	L
Mauritania	--	--	L
Mauritius	--	--	L
Mozambique	400	80	M
Niger	--	--	L
Nigeria	180	90	L
Rwanda	--	--	L
Senegal	--	--	L
Seychelles	--	--	L
Sierra Leone	--	--	L
Somalia	--	--	L
Sudan	--	--	L
Swaziland	5,000	1,820	L-M
Tanzania	360	--	M
Togo	--	--	L
Uganda	--	--	L
Upper Volta	--	--	L
Zaire	73	--	L
Zambia	228	5	L-M

TABLE 3 CONT'D

Country	Geological Resources	Technically & Economically Recoverable Reserves	Degree of Exploration
Asia			
Bangladesh	1,649	519	M
Burma	86	--	M
India	56,799	33,700	M-H
Indonesia	3,723	[illegible]	L
Nepal	--	--	L
Philippines	87	--	L-M
Thailand	78	--	M
Latin America			
Bolivia	--	--	M
Costa Rica	--	--	L
Dominican Rep.	--	--	L
Ecuador	22	--	M
El Salvador	--	--	L
Guatemala	--	--	L
Guyana	--	--	L
Haiti	--	--	L
Honduras	--	--	L
Jamaica	--	--	L
Nicaragua	--	--	L
Panama	--	--	L
Paraguay	--	--	L
Peru	1,112	105	M
Near East			
Egypt	80	--	M
Jordan	--	--	L
Lebanon	--	--	L
Morocco	96	--	M
Portugal	--	--	--
Spain	2,298	537	H
Syria	--	--	L
Tunisia	--	--	L
Turkey	3,268	793	M

NOTES: Hyphens indicate that data are unavailable.

Key to degree of exploration

H - well-established reserve estimates, well-defined geology within each coal-bearing region, adequate coal-bearing data;

M - some exploration programs have been documented;

L - no exploratory programs or few programs with very little specific data

SOURCES: World Energy Conference (1977); World Bank (1979).

TABLE 4

1977 Coal Production and

1973-77 Annual Growth in Producti

AID Recipient Countries

Country	000 Tons	Annual Growth Rate (%) 1973-77
Africa		
Benin	--	--
Botswana	200	26.5
Burundi	11	21.8
Cameroon	--	--
Cape Verde	--	--
Chad	--	--
Djibouti	--	--
Gambia	--	--
Ghana	--	--
Guinea	--	--
Guinea-Bissau	--	--
Kenya	--	--
Lesotho	--	--
Liberia	--	--
Malawi	--	--
Mali	--	--
Mauritania	--	--
Mauritius	--	--
Mozambique	390	-0.3
Niger	--	--
Nigeria	290	-3.0
Rwanda	--	--
Senegal	--	--
Seychelles	--	--
Sierra Leone	--	--
Somalia	--	--
Sudan	--	--
Swaziland	129	-2.0
Tanzania	1	-24.0
Togo	--	--
Uganda	--	--
Upper Volta	--	--
Zaire	110	-1.1
Zambia	800	-4.0

TABLE 4 CONT'D

Country	000 Tons	Annual Growth Rate (%), 1973-77
Asia		
Bangladesh	--	--
Burma	15	0.0
India	102,370	6.1
Indonesia	200	7.6
Nepal	--	--
Philippines	275	21.9
Thailand	575	12.0
Latin America		
Bolivia	--	--
Costa Rica	--	--
Dominican Rep.	--	--
Ecuador	--	--
El Salvador	--	--
Guatemala	--	--
Guyana	--	--
Haiti	--	--
Honduras	--	--
Jamaica	--	--
Nicaragua	--	--
Panama	--	--
Paraguay	--	--
Peru	--	--
Near East		
Egypt	--	--
Jordan	--	--
Lebanon	--	--
Morocco	640	3.2
Portugal	--	--
Spain	16,700	5.5
Syria	--	--
Tunisia	--	--
Turkey	13,100	6.7

Sources: UN, World Bank, US Bureau of Mines

The report goes on to emphasize those constraints further and to spell out the role that developed countries and international agencies might play in alleviating them:

> "Assuming a willingness on the part of LDCs to look into their coal resource potential systematically (and such willingness is a prerequisite of any meaningful coal development), the specific measures which should be promoted by developed countries and international agencies are:
>
> (a) provision of funds and technical assistance for geological surveys, exploration and engineering work to determine the technical/financial/economic viability of projects. As noted, the lack of preinvestment data is at present the major obstacle to accelerated coal development in LDCs...."
>
> Ibid., p. 23.

As with oil and gas, this project can assist in gathering and interpreting basic coal-related geological data and in determining the technical and economic viability of proposed coal development activities. The funds available for the project are but a drop in the bucket compared with the need and with the funding levels available through the World Bank for actual coal development, but they represent an important commitment by the U.S. government to assist developing nations with the early phases of this important aspect of indigenous energy development.

3. Legislative Mandate

Given the developing countries' current and projected oil supply problems and the impact of the oil crisis on development prospects, the U.S. has a clear interest in assisting the developing world with fossil fuel exploration and development. The Congress recognized that interest in enacting 1979 Ammendments to Section 106 of the Foreign Assistance Act. That section, as amended states:

> "...there is a compelling need for vigorous efforts to improve the available data on the location, scale and commercial exploitability of potential oil, natural gas and coal reserves in developing countries, especially those which are not members of the Organization of Petroleum Exporting Countries."

Further, the Congress found that:

> "Assistance for the production of energy from indigenous resources....would be of direct benefit to the poor in developing countries because of the overwhelming impact of imported energy costs upon the lives of the poor and their ability to participate in development."

The Act authorizes the President to:

"furnish assistance....for energy programs involving research on and development of suitable energy sources ....(including) the collection and analysis of information concerning the potential of a country for producing energy from indigenous resources. Such assistance may include data collection and analysis, the training of skilled personnel, research on and development of suitable energy sources, and pilot projects to test new methods of energy production."

Specifically, Section 106 authorizes up to $7 million for FY 1980 to:

"facilitate geological and geophysical survey work to locate potential oil, natural gas, and coal reserves and to encourage exploration for potential oil, natural gas, and coal reserves in developing countries...."

Further ammendments to the Foreign Assistance Act currently pending before Congress would lend even greater strength to AID's mandate in the area of conventional energy exploration and development. In reporting out the International Security and Development Cooperation Act of 1980 (H.R. 6942), the House Committee on Foreign Affairs wrote:

"The committee notes with approval the significant increase in total funding requested in fiscal year 1981 for energy-related activities. Similarly, the committee is pleased by initial steps taken by IDCA, AID, the State Department, and the Energy Department to broaden their energy-related programs and projects to include assistance to non-OPEC developing countries for identification and development of indigenous fossil fuel resources. These agencies are encouraged to become more deeply involved in energy programming and projects in non-OPEC developing countries, given the profound impact of the Third World's growing oil debts for the countries involved and for the international financial system. More than ever, the committee is persuaded that increased effort and funding must be devoted to energy programming for fossil fuels as well as renewable and nonconventional energy which non-OPEC developing countries are diverting a growing share of their foreign exchange to pay for imported oil and development plans are being stifled as a result."

Report of the Committee on Foreign Affairs on H.R. 6942, 41.

The pending bill would authorize expenditure of $7 million in FY 1981 for the same purposes as the FY 1980 authorization.

4. Needs Unmet by Existing Conventional Fuels Assistance Programs

A review of conventional fuels programs now underway or being planned by multilateral and bilateral assistance agencies reveals gaps that could be filled, at least in part, by this project.

World Bank. The World Bank's fossil fuel assistance program, initially approved by the Bank's Executive Directors in 1977, emphasizes financial aid to countries with known oil, gas and coal reserves to promote development and production of those reserves. Less than 20% of projected FY 1980-83 spending on the project will be spent for the oil and gas exploration component, and less than 10% of that will go toward pre-exploratory geological and geophysical surveys, and none of it for remote sensing. The bulk of IBRD funds will go for building pipelines and refineries, assisting with enhanced recovery schemes, and other projects designed to bring into production reserves that were known but were not economical to recover before the 1973-74 price increases, or reserves whose development has been inhibited by other technical, institutional, political or economic constraints. Even IBRD's geophysical work is largely limited to countries where discoveries have already been made. The Bank's January 1979 program paper frankly acknowledges the gap in its work:

> "The petroleum projects already identified are largely for the development of proven reserves of gas and oil which had been discovered over a long period of time but which until 1974 were not commercial. The Bank program, and projections of petroleum production, are therefore based largely on knowledge derived from surveys and exploratory work done in the past. Further increases in oil and gas production, and in Bank financing, will depend on new exploration leading to new discoveries. However, the amount of geological and geophysical work, as well as exploratory drilling, since 1973 have not increased in response to the new economic of production but have remained at a very low level in most of the developing countries. This is a matter of serious concern, since such work is a prerequisite to sustained increases in production."
>
> (IBRD, A Program to Accelerate Petroleum Production in the Developing Countries, January 1979, p. 11.)

By assisting countries with geological and geophysical surveys, and by limiting this project for the most part to such surveys, AID can contribute to solving the problem the Bank document describes. As noted above, consultation with the Bank will be involved in the process of country and activity selection, so that surveys funded by AID might enhance the country's prospects for receiving later assistance from the Bank.

In the area of coal exploration and development, the World Bank is again concentrating its funding in countries with the best prospects of beginning (or expanding) significant coal production in the immediate future. The Bank notes that the lack of knowledge of reserves is less a problem with coal than with oil and gas. Consequently, Bank funding for coal is spent primarily on quality testing, mining feasibility studies, engineering work, and appraisal-oriented exploratory drilling. No funds are spent at present in the large number of countries where some exploratory drilling has occurred but the extent, quality and mining characteristics of identified fields have not yet been studied enough even to make rough economic evaluations of the reserves. It is in these areas that AID could make its contribution to coal exploration. Although financial risk is higher for such activities than for the coal work the Bank funds, it is considerably lower than the risks involved in oil and gas exploration.

AID's program will, in short, complement the IBRD program by focusing on pre-exploratory work, including remote sensing. AID will also differ from the Bank by limiting project activities to non-OPEC countries and to low-income countries that are otherwise eligible for AID assistance. Additionally, AID's assistance will be in the form of grants, while IBRD offers only loans.

United Nations. The United Nations system has been involved in varied but largely uncoordinated projects to provide developing countries with assistance in conventional energy exploration and development. It is difficult to estimate expenditure levels -- particularly for exploratory work -- and to determine the effects of UN activities on actual oil, gas and coal development in LDCs. Among the U.N. efforts reported to date are:

1) A study of the hydrocarbon potential of the oceans;

2) A pair of reports on new concepts, approaches and technologies for oil and gas exploration;

3) A UNEP study and meeting of experts on the environmental impacts of oil and gas development and production;

4) ILO studies on labor-related issues, including the safety, health and working conditions of petroleum industry workers, and the availability of training for technicians and workers in national oil industries;

5) UNDP technical cooperation projects and short-term advisory missions relating to oil and gas in five countries;

6) UN Division of Natural Resources and Energy (UNDNRE) activities in oil and gas exploration, including individual country-level assessments now underway or planned in some 20-30 countries, providing one-month reviews of existing data by two experts;

7) Two UNDNRE conferences for LDC petroleum personnel in 1980, including one on petroleum geology in Beijing in March and one on exploration strategies in Oslo in August.

In addition, UNDP is proposing the establishment of a $15 million revolving fund for oil and gas exploration. To date, however, the UN has not financed any actual geological or geophysical exploratory surveys; it is unlikely that even such a revolving fund could meet the need for exploratory work in developing countries.

Asian Development Bank. The ADB does not fund any petroleum exploration, but does finance efforts to develop indigenous coal, lignite, gas and hydro resources for electric power production.

Inter-American Development Bank. The IDB is currently considering the establishment of a $1.1 billion fund to encourage private investment in energy and mineral development in Latin America. The fund would provide political risk insurance and loan guarantees for private investors in fossil fuel development in the region. Opposition by Mexico and Venezuela resulted in tabling of the fund proposal at this year's IDB Board of Governors meeting, but further studies and negotiations are underway and IDB staff expect it to be approved in 1981.

A second IDB initiative may be more immediately important to the furtherance of oil and gas development in the region. Later this year IDB will initiate geophysical surveys involving the entire outer continental shelf of Central and South America (except Mexico) and the shelves around all the Caribbean nations except Cuba. This effort, involving a total investment of approximately $80 million in IDB funds, is intended to advance the state of knowledge about offshore oil and gas resources in the participating countries to the point where private companies will engage in actual exploratory drilling. Twenty-one countries have formally indicated their desire to participate in the program.

U.S. Government. The U.S. Government does not presently provide direct financial assistance for oil, gas or coal exploration in developing countries. The Overseas Private Investment Corporation (OPIC) does provide political risk insurance to U.S. investors in oil and gas exploration in developing countries. Oil industry sources often cite political risk as the most important impediment to investment in oil exploration in developing countries. OPIC has issued seven oil and gas related insurance contracts to U.S. investors in five countries, with a total coverage of approximately $325 million. OPIC is prohibited by law from offering direct loans for oil and gas exploration or development.

The Export-Import Bank provides loans, guarantees and insurance for U.S. exporters of oil and gas drilling equipment. As of mid-FY 1979, Ex-Im Bank had supplied a total of $111 million for such exports to non-OPEC LDCs, concentrated largely (about 75%) in just three countries -- Argentina, Mexico and Brazil, none of which are AID recipients.

The Department of Energy has carried out surveys of fossil fuel potential in a small group of countries as part of the DOE energy assessment program. Formally known as the International Energy Development Program (IEDP), this effort has produced assessments of energy needs, uses and resources in two AID recipient countries (Egypt and Peru) and is currently carrying out or planning additional assessments in four other non-AID developing countries. The resource estimates included in each assessment have been provided by a team from the U.S. Geological Survey that has visited the subject countries and compiled the available data on resources and reserves.

DOE also manages a program aimed at improving U.S. understanding of the extent of oil and gas resources and reserves in various countries, with an emphasis on the well-established oil producers. This program, designated the Foreign Energy Supply Assessment Program (FESAP), purchases geological data from an international petroleum consulting firm and subjects the data to analysis by experts from the U.S. Geological Survey and DOE. Efforts have been undertaken to date to evaluate the extent of known reserves and make rough estimates of undiscovered resources in Nigeria, Venezuela/Trinidad, Indonesia and the Persian Gulf region. The FESAP program is not intended to be an assistance program to the countries involved.

B. Detailed Project Description

Like other technical assistance projects, Project 936-5724 -- Technical Assistance in Conventional Energy Resource Identification -- is aimed at helping developing countries help themselves in an area that is extremely important to their overall development progress. As part of a broad energy assistance program, the project will have as its goal the gradual development of indigenous energy resources and energy-related capabilities to enable recipient countries to meet their energy needs and alleviate their heavy dependence on expensive imported sources of energy. More specifically, by improving the recipient countries' stock of information about the geological potential for energy resources within their borders, and by improving their ability to plan and manage a program for the exploration and development of such resources, AID will help these countries mobilize the capital and technical expertise necessary to increase their domestic supplies of conventional energy.

For purposes of this project, the term "conventional energy" is defined to include all geological energy resources except uranium -- that is, fossil fuels (oil, natural gas, coal and peat) that are extractable with proven and widely available technologies, as well as geothermal energy and other resources (such as oil shale and tar sands) that may be extractable with technologies now under development and/or commercialization. The project's major emphasis, however, will be on oil, natural gas and coal.

It would be well beyond AID's financial capability (and a distortion of its assistance mandate) to undertake the entire process of fossil fuel exploration, development and production in the developing countries, or even in any single country. That process has historically involved a partnership between the public and private sectors, with the private sector providing most of the capital required. Although the relationships between private oil companies and governmental owners of energy resources have undergone dramatic and fundamental changes in recent years, the partnership survives and is likely to do so for the foreseeable future. Developing countries will continue to turn to private corporations for investment capital and technical expertise in order to develop their indigenous energy resources, albeit with host government participation. In addition, multilateral development banks are beginning to lend funds for energy exploration.

AID's role will be to facilitate the public/private partnership in developing countries by helping to overcome some of the barriers to private investment in the energy resource sector that were described in the background section of this paper. It is a limited role, focusing on the early phases of resource assessment and exploration and on enhancing the recipient countries' capabilities to manage the overall process of resource identification, development and production. AID will not function as an intermediary between the countries and the private companies; our clients -- and the project's beneficiaries -- will be the AID recipient developing countries. AID's technical assistance will enhance <u>their</u> ability to form and maintain the public/private partnership.

1. Goal

The overall goal of the project, then, is to enable developing countries to mobilize public and private capital and technology for conventional fuel exploration and development, and to help LDCs plan and manage the process of fuel development in a manner that advances their overall economic development progress and improves the quality of life for their citizens. The means of achieving this goal include the following:

a) Expanding the quantity and quality of available information about the geological potential for LDC indigenous fuel resources;

b) Helping AID recipient countries develop the institutional mechanisms and the technical capability needed to identify and develop their energy resources;

c) Supplementing these emerging indigenous capabilities with limited direct applications of U.S. expertise and technology to help plan, organize and implement national programs of conventional energy exploration.

2. Strategy

Technical assistance provided under the project will include the following activities:

a) Reviewing, at the country level, what is now known about the conventional energy resources of the country. This will involve collection, review, compilation and summarization of all geological and geophysical data related to prospects for finding and developing conventional energy resources.

b) Filling gaps in the basic elements of geological information, particularly the development of geological maps and satellite images that can be used to identify areas for energy resource exploration.

c) Processing and interpreting existing raw geological/geophysical data that have either not been interpreted previously or have been interpreted under conditions that have failed to provide the country with the maximum amount and best quality of information. Recent technological breakthroughs in data processing have made it possible to learn much more about resource prospects from the reinterpretation of existing data. In addition, it may be in the interest of the countries involved to commission an independent interpretation of data previously evaluated by private oil companies, particularly when the companies involved have decided on the basis of the data to cease exploration efforts in the country. A second look, based on new techniques and up-to-date economics, could well lead to renewed interest in exploratory drilling.

d) Assisting the host country in developing a comprehensive energy resource exploration strategy. Using existing geological and geophysical data, the plan would identify promising areas for further geophysical work and for exploratory drilling and would provide timetables, budgets, and implementation strategies.

e) Evaluating the country's existing manpower and institutional capabilities in the conventional energy field and making recommendations for strengthening those capabilities. Particular attention will be paid to identifying training needs that can be met through AID's companion project, Training for Conventional Energy Development. In addition, opportunities for on-the-job training during activities under this project will be identified. The latter category of training might include the development of technicians who can interpret Landsat images or aerial photos, work in the field on geophysical studies, and assist in geophysical data interpretation.

f) Providing assistance in the organization, management, technical personnel training and operation of government entities involved in energy resource exploration, development and production. Such entities might include geological institutes; ministries of energy, mining, planning, economic development, finance, etc; and government oil companies.

g) Conducting new geophysical field work, such as remote sensing studies, magnetic or gravity studies, and seismic surveys. Since seismic surveys tend to be very expensive (see Economic Analysis) and could easily consume all project funds, they are not likely to be undertaken until extensive study reveals that no other private or public sources of funding are available to the requesting country, and that gathering and analyzing new seismic data could significantly advance the country's overall exploration effort and improve its chances of attracting private capital for exploratory drilling.

3. Selection of Participating Countries and Activities

Upon project approval, AID Missions will be informed about the project and will be asked to assist AID/W in an evaluation of needs and targets for project activities. The core of the evaluation will be a major study to be undertaken by the U.S. Geological Survey under the direction of DS/EY. The study, called the Conventional Energy Assistance Needs and Targets Study, will consider candidate countries in light of the country selection criteria described below as well as any additional criteria that appear to be appropriate.

Funding under this project, while generous compared with AID projects in some fields, is severely constrained relative to the cost of doing business in the field of conventional energy resource exploration. This means that activities will be concentrated in only a few countries each year. If these limited activities are to have significant impact and are to help achieve the goal of attracting new investment in conventional energy resource exploration and production, the activities and the

countries in which they are to be undertaken must be selected with care. It is recognized, however, that this project deals with a field in which high levels of uncertainty and risk exist, due to the low level of exploration that has occurred to date in most AID recipient countries. Our analysis of best opportunities, therefore, may not always point us in the direction of the "surest bet" to find oil, gas or coal. AID's willingness to share the risk of gathering data in heretofore unexplored areas is a distinguishing feature of this project, as opposed to projects undertaken by the World Bank and private sector investors.

AID funding under this project will be extended only to countries that are otherwise eligible for development assistance or economic support assistance from AID. Project activities will also be limited normally to non-OPEC countries. It is possible, however, that special circumstances may justify giving consideration to the needs of the few OPEC countries that are in the AID recipient category. Indonesia, for example, may be considered for assistance with coal exploration, and Ecuador, whose oil resources are dwindling, may be considered for assistance with new exploration. The individual merits of country requests and activity proposals will serve as the major determinants of selection.

The criteria to be applied to the process of selecting countries for assistance with this project include the following:

a) Expressions of interest in receiving assistance under this project, as reported to AID/W through field missions;

b) Current knowledge about the geological potential for conventional energy resource development, based on currently available geological data;

c) The degree of energy import dependence of the country, and the severity of financial and developmental strains attributable to the dependence;

d) The potential for reducing import dependence and meeting current and projected energy needs through means other than enhancement of conventional fuel supplies -- i.e., through renewable resources, conservation, and fuel switching;

e) The presence of impediments to conventional energy resource exploration -- such as the absence of an adquate base of geophysical data or adequate expertise in the analysis of such data -- that might be alleviated through this project;

f) The relationship between the proposed conventional energy activity and other U.S. Government (including both AID and DOE) energy projects underway or being planned within the country, including comprehensive energy assessments;

g) The availability on non-AID sources of conventional energy assistance to the country as alternatives to assistance under this project;

h) The outlook for the country's success in acquiring and effectively using the technology, capital and other goods and services necessary to achieve actual development and production of any resources that might be discovered following technical assistance under this project; and

i) The degree of political and economic stability in the country, with particular attention to the climate for public or private investment in energy resource development.

The Needs and Targets Study will begin by establishing a detailed procedure for applying these criteria to candidate countries. Then, in actual application of the criteria to all non-OPEC AID recipient countries, the study will rank candidate countries according to determinations made under each of the criteria. (The study team and AID will determine the relative weight to be assigned to each criterion.)

It is expected that the evaluation procedure will include consideration of the following questions, or questions of similar substance:

1) Has the country expressed interest in receiving assistance from AID under this project?

2) Does the country appear, on the basis of existing data, to have reasonable geological prospects for conventional energy discovery and development?

a) Are there known sedimentary basins of the potentially fuel-bearing type within the country? If so, how many, and how large are they? Are there structures that appear promising for coal reserves?

b) Has any pre-drilling exploration taken place in these basins or structures? Were the results encouraging? What was the year of the most recent studies?

_____Satellite or aerial photo-geology
_____Magnetic and/or gravitometric studies
_____Seismic surveys

c) Has any exploratory drilling occurred? If so, what companies were involved in the drilling program(s)?

_____Total number of wells drilled in the country
_____Total number of drill footage
_____Year in which most recent well was drilled

d) Have any discoveries been made?

_____Some show of hydrocarbons or coal
_____Definite oil, gas or coal discovery (specify which) but extent of reserves not determined
_____Proven commercial reserves (specify fuel and quantity)

e) Is there any current production of conventional energy resources in the country? If so, specify fuel(s) and quantity during most recent year for which data are available, as well as sequential data to indicate trends in growth or decline in production. Any exports? If so, how much?

f) Are any foreign oil companies, coal companies, or exploration companies currently under contract, lease, license or concession in the country to explore for conventional energy resources? If so, describe the arrangements and circumstances in general outline.

3) What percentage of the country's current commercial energy requirements are met through imported oil? Given recent trends in energy and GNP growth and energy prices in the country, as well as the country's current indigenous supply situtation, what percentage of commercial energy requirements are likely to be met through imported oil in 1990? What do current levels of oil imports represent for the country in terms of:

a) Contribution to balance of payments deficit, if it exists;
b) Percentage of total import bill;
c) Ratio of import costs to export earnings;
d) Contribution to external debt and decline in foreign currency reserves, if applicable;
e) Estimated impact on GNP growth rate.

How serious is the overall impact of the country's oil imports on its economic condition at present?

_____Critical
_____Serious
_____Minor
_____No impact

4) In the absence of new indigenous supplies of conventional energy, in what alternative ways does the country expect to reduce its oil import dependence in 1990? (Describe plans and/or programs under each.)

_____Renewable sources
_____Improved efficiency
_____Fuel switching
_____Hydropower
_____Alternative development strategies
_____Other (describe)

5) Wh-t factors, if any, appear to be constraining exploration for conventional energy supplies in the country?

_____Lack of basic geological maps and information
_____Lack of expertise in the conventional energy field
_____Inadequate institutional mechanisms or organizaton
_____Lack of risk capital
_____Absence of interest in the country among foreign companies and investors
_____Governmental or private-sector hesitancy or unwillingness to come to terms on exploration arrangements
_____Unfavorable indications in basic geological data
_____Unfavorable results of earlier exploratory efforts
_____Political turmoil
_____International boundary disputes
_____Other (specify)

6) What other U.S. Government-funded energy projects and activities have been undertaken in the country? Briefly describe projects. Which of them are AID funded? Would the proposed conventional energy activity appear to complement, conflict wth or duplicate the other projects? How?

_____Rural electrification
_____Fuelwood, charcoal, traditional fuels projects
_____New and alternative sources projects
_____Energy assessment, planning, policy development projects
_____Other (specify)

7) Has the country sought and/or received assistance in the conventional energy field from other official lending or aid-giving organizations? Describe the projects funded by these organizations in the country. Is the country now seeking or discussing such aid?

_____IBRD or IDA
_____UN
_____Regional development bank
_____Non-US bilateral assistance

8) Does the country appear to have at its disposal, or to have the ability to obtain, the institutional and manpower capabilities needed to pursue a program of conventional energy development and production if exploration is successful?

a) Institutional

_____geological institute
_____national oil company
_____ministry of energy, minerals, natural resources or similar

b) Manpower

_____trained geologists and other scientists
_____planners, economists and managers
_____specialized technicians

9) Does the country's current political, social and economic condition appear to be sufficiently stable to encourage private sector investment in conventional energy exploration, development and production?

It can be seen that some of these questions involve straightforward factual reporting, while others require a considerable degree of judgement and estimation. USGS and DS/EY will need to work closely with the Regional Bureaus and Field Missions to gather information with which to answer the questions. Additional sources of information are likely to include USG agencies such as the Department of Energy and the CIA, industry and government publications and personnel, the UN and World Bank.

Selection of countries will be closely tied to the selection of specific project activities, and the two will be mutually dependent. AID will select countries where manageable project activities can be identified, and detailed planning of project activities will be undertaken as promising countries are selected. Activities appropriate to each country will be selected from the list under Strategy, above. A hypothetical set of activities for an individual country, encompassing the full range of activities, might look like this:

Phase I: Preliminary Resource Assessment (Four months)

a) Review of current geological/geophysical information and preparation of summary report;

b) Evaluation of manpower and institutional resources and needs;

c) Assistance/collaboration on development of comprehensive national exploration strategy.

Phase II: Technical Consulting Services to Advance Exploration (Eight to 24 months)

a) Technical services to improve basic geological data base;

b) Organizational/managerial and technical training assitance to relevant government entities.

Phase III: Geophysical Data Services (12 to 24 months)

a) Interpretation or re-interpretation of existing raw geophysical data;

b) Acquisition of new data through remote sensing studies and/or field studies using magnetic, gravity or seismic techniques; and, in the case of coal, appraisal drilling and sample analysis;

c) Interpretation of newly-acquired data.

Phase IV: Preparation for Work with Other Funding Sources (Six months)

a) Economic analysis leading to preliminary determination of economic feasibility of exploratory drilling, field development, producton and marketing;

b) Assistance with project preparation and preliminary proposal development for submission to multilateral lending institutions for exploration financing, if appropriate.

MISSING PAGE

NO. 32

PART III - PROJECT ANALYSIS

A. Technical Analysis

This project will employ a variety of sophisticated technologies in conventional energy exploration. These will include both remote and field-based data-gathering techniques, as well as data-interpretation technologies. These technologies will be transferred through short-term practical training, collaborative application by U.S. and host country specialists, and some provision of hardware.

The United States leads in the development and application of the technologies used in the pre-drilling phase of fossil fuel exploration. U.S. technology in remote sensing has only recently come into use as a petroleum exploration technique, and existing programs of assistance to developing countries in this field, such as the World Bank fossil fuel program, have not employed remote sensing. Thus, the AID project can play a pioneering role in applying remote sensing to LDC fossil fuel exploration.

A recent study looked at enhanced satellite images (produced by the U.S. Landsat satellite) of 15 already-discovered giant oil fields, in order to determine in retrospect whether Landsat imagery would have been a useful tool for the discovery of those fields if that technology had been available prior to ground-based exploration of the fields. The images revealed anomalous geological structures that the study's author concluded would have been very helpful in pinpointing the best locations for seismic and other geophysical surveys. Extrapolating from that finding to a broader assessment of Landsat imagery's usefulness for oil exploration, the study said:

> "The obvious conclusion is that there are large explored and unexplored areas of the world which should be thoroughly and repeatedly studied with Landsat images. By doing so, anomalous areas could be outlined and pinpointed for intensive geologic and geophysical investigation. Such a program would drastically cut exploration costs and, in turn, surely result in the discovery of more giants."
>
> Michel T. Halbouty, "Geologic Significance of Landsat Data for 15 Giant Oil and Gas Fields", American Association of Petroleum Geologists Bulletin, January, 1980, p. 36.

Landsat images exist and are available for purchase from the U.S. Geological Survey for most, if not all, the developing countries eligible for assistance under this project. AID will assist selected countries in producing mosaics of such images, in interpreting their significance for conventional energy prospects (especially oil and gas), and in training nationals in their use and interpretation.

FIGURE 1

SCHEMATIC PLAN OF PROJECT ACTIVITIES

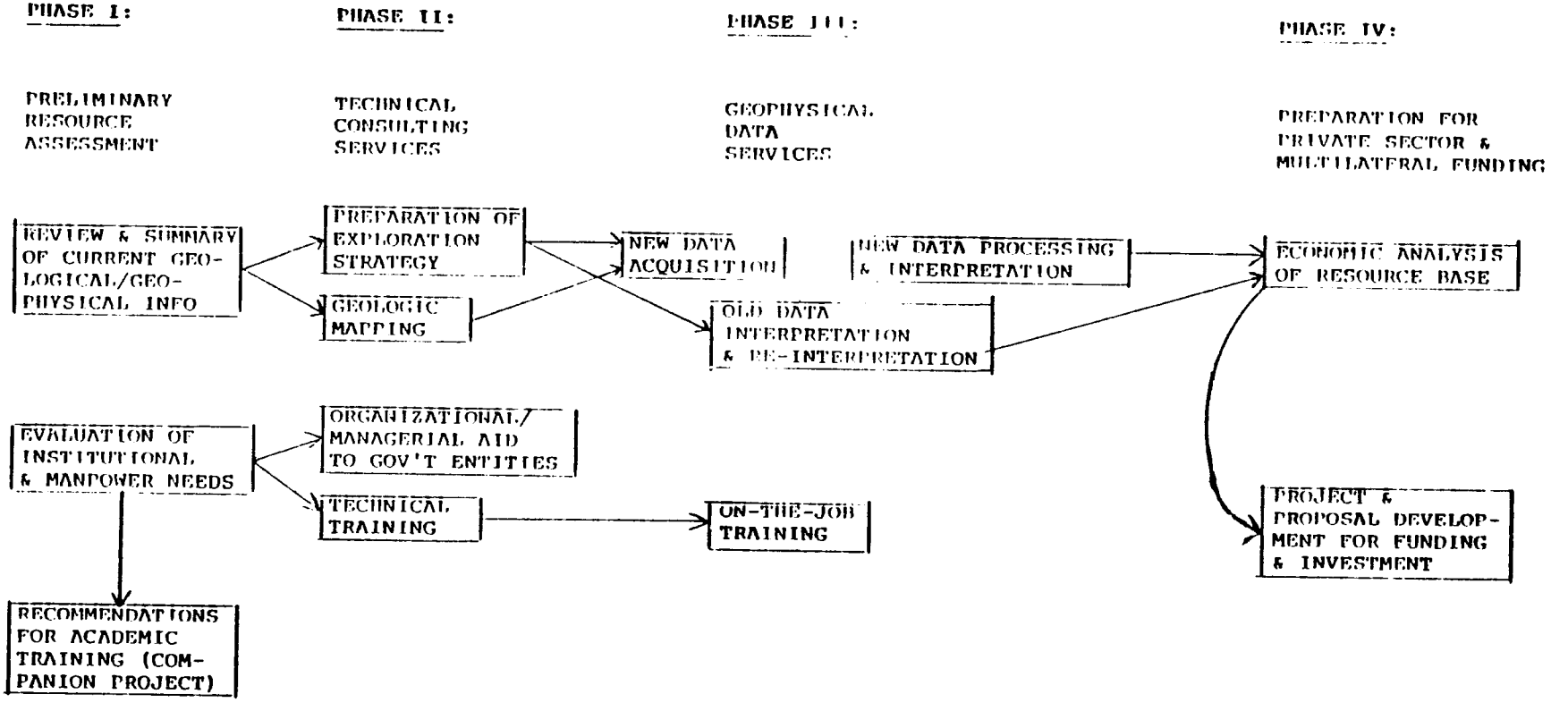

The technologies involved in ground-based and marine exploration for oil, gas and coal are well-established in the fossil fuel industries, but they are highly sophisticated and capital-intensive. Very few persons from developing countries outside OPEC are trained in the use of these technologies. Typically, exploration contractors employ a highly mobile work force and pay high wages in order to attract workers to jobs requiring long periods away from home, and long work shifts in remote locations and harsh environments. Such work crews tend to be international in their composition, but their members usually come from countries with well-established energy industries. Support industries that grow up around the energy industries include equipment manufacturers (i.e., builders of seismic ships, drilling rigs, etc.) and service companies (i.e., suppliers of drilling mud, casing, food and other essentials to the crews in the field). Other firms specialize in processing raw seismic data, performing geochemical laboratory analysis of drill core samples, etc. This last category of expertise is found almost exclusively in the oil-producing developed countries.

The energy exploration industries and related support industries have demonstrated their capacity in recent years to operate in remote locations under extreme environmental conditions. Technological advances made in the North Sea and the North Slope are likely to be useful for operations in many developing countries. While central Africa and Latin America will pose problems of heat and drought rather than cold, they will be similar to northern Alaska in their remoteness and lack of infrastructure. Offshore conditions near Africa, Asia and Latin America may actually be less harsh than North Sea conditions, but many prospective offshore areas present problems of deep water and, above all, remoteness from infrastructure.

On the North Slope of Alaska and in the deserts of the Middle East, these industries have operated under conditions requiring extensive airlifts of equipment and people and self-sufficient work camps to provide tolerable living conditions for large groups of workers. In the development of oil fields in the North Sea, these industries have operated in the world's most severe marine environment and in waters far deeper than the Gulf of Mexico, where the offshore oil industry came of age. North Sea crews are ferried by helicopter, and equipment is shuttled by workboat from the coasts of Scotland and Norway. Drilling rigs and production platforms of advanced design have been accommodated to the conditions of the North Sea environment.

Recent improvements in the technology of geophysical exploration are also likely to be of considerable benefit to developing countries. Seismic field work has been facilitated and made less environmentally damaging (see Environmental Analysis) by the introduction of modern energy sources (vibrators, air guns, etc.) to replace dynamite in the generation of sound waves. Other improvements have involved the use of satellites for navigation purposes in offshore surveys and -- perhaps most importantly -- the development of three-dimensional surveying techniques that can delineate subterranean geological structures in minute detail.

Although somewhat more expensive than earlier survey methods, the 3-D technique is becoming widely used because it remains far less costly than exploratory drilling. By using the best available seismic techniques to identify precisely the best location for a drill hole, exploration companies can minimize the risk of drilling a dry hole. Combined with significant improvements in the computerized analysis of seismic data -- improvements that have led oil companies to engage in widespread re-evaluation of existing data -- the 3-D technique is reportedly a major step toward the day when oil and gas can be definitely identified through geophysical techniques alone, eliminating the costly drilling phase. According to a recent article in International Petroleum Times (January 15, 1980), that day may arrive by the turn of the century.

The greatest potential technical constraint to conventional energy exploration in developing areas is likely to be competition for the limited amount of equipment and expertise available on a global basis. Since the experts, the exploration equipment, and the decision-makers all come from developed countries (and more specifically from the U.S. in the case of AID-funded activities,) the geophysical contractors may have higher priorities for the use of that equipment and expertise. It is not possible at this stage to determine just how severe this constraint might be. Only when bids are requested for field surveys will it become clear whether or not the necessary technologies can be obtained. It is clear, however, that the necessary technologies do exist and are amply proven.

Increasing the developing countries' supply of such technologies -- particularly the technical skills involved -- is a central objective of this project and of the companion project in Training for Conventional Energy Development. Wherever possible, contracts for field surveys will include provision for on-the-job training of host country nationals.

Technical constraints on oil, gas and coal development are likely to be more severe at the production stage than in exploration. Infrastructure requirements include pipelines (for oil and gas), railroads (for coal), and processing facilities. The economics involved in each case will depend on the size of the reserves being developed, the distance of the deposits from existing transportation networks and markets, and many other factors. The project will provide expertise to assist host countries in evaluating the downstream technical requirements involved in the development of their resources.

It is difficult to make a clear distinction between technical and economic factors. As the price of oil and other energy resources rises, the economic viability of technically difficult development projects increases. (Again, the examples of the North Slope and the North Sea are pertinent.) Given the precarious balance-of-payments and external-debt conditions faced by many developing countries, and the projections for continued increases in the price of oil, it is probable that the technical constraints on LDC fossil fuel development will be less formidable than they might appear on initial appraisal.

B. Economic Analysis

The Risk Factor. The economics of fossil fuel exploration and development are inherently volatile and risky. It is not possible to calculate the balance of costs and benefits in advance, since the possibilities in each instance of oil exploration range from finding no oil at all to finding a major field capable of supplying a country's own needs and providng export earnings as well. For coal, uncertainty surrounding the resource itself is slightly lessened, but as with oil and gas, the economic viability of a particular deposit depends on variables such as infrastructure costs, market demand, and prices, all of which can change quickly.

New Economic Incentives. Recent changes in international energy economics have, however, enhanced the attractiveness of fossil fuel exploration in some developing countries. Small sedimentary basins that are unlikely to yield export-level finds were not attractive when oil sold for $3.00 per barrel, but at $35 many small structures may be feasible to explore and develop. The necessary pipelines, refineries, transport terminals, supply bases and other infrastructure requirements are still very expensive in "virgin" areas of developing countries, but the prospect of a domestic energy supply to replace foreign imports offers a substantial incentive to explore.

Conflicting Economic Interests. Private investors, notably international oil companies, make exploration investment decisions on the basis of their own projected return on investment; this means, of course, that corporate interests predominate over and sometimes conflict with the national interests of countries where exploration may (or may not, if the return looks unfavorable) take place. Logically, oil companies first explore the most promising geological prospects and the locations with the lowest projected development costs. Developing nations with sedimentary basins suggesting only small hydrocarbon deposits and high infrastructure costs may not be explored at all by private firms, or they may be explored only on terms that are economically unfavorable to the countries involved. Petroleum companies may be interested solely in developing a major exporting field, while the LDCs may realize important benefits from finding even a small field capable only of replacing a fraction oil imports. Furthermore, private companies typically recoup the costs incurred in unsuccessful exploratory efforts by spreading them over the firm's entire exploration program. This means that host governments may receive less favorable terms than they otherwise would, in effect subsidizing exploration outside their borders.

Host country governments have become increasingly wary of the terms offered them by oil companies in advance of exploration. In the past, those terms were likely to be far more favorable to the private companies than to the national governments of countries where exploration took place. When large finds resulted, the host governments either lost out on revenues or, in recent years, they simply nullified the existing agreements and took over the oil fields, demanding full participation in the production operation and a majority share of the revenues. Fear of expropriation has led to

reluctance on the part of private investors to undertake new exploration in developing countries. Now, however, according to the International Petroleum Times, state takeover and participation have come to be accepted by the companies as a fact of life, and relations between oil companies and host governments appear to be improving. As a result, geophysical exploration is expanding in LDCs.

LDC governments must also calculate their investment costs in terms of foreign exchange, since virtually all such costs must be paid in foreign currency. With only a limited reserve of hard currency available for development-related investments of competing priorities, governments must calculate the opportunity costs of fossil fuel exploration and of the alternative activities that must be foregone as a result of an investment decision in the fuel sector.

Economic Factors in AID Involvement. AID's decisions to enter into the conventional fuel exploration process represents a willingness to relieve a portion of the recipient nations' economic risk by sharing the costs of early exploratory work at modest levels, and a recognition that LDCs' national interests require financial and institutional support in order to negotiate successfully with spokesmen for the corporate interests of multinational oil companies. In designing this project, it is necessary to devise a means of ensuring that AID dollars are spent where the economic payoff is greatest in tangible assistance to the recipient countries. In addition, of course, the limited financial resources available for the project must be spent wisely and efficiently from the standpoint of the U.S. interest.

Investigation of the literature and interviews with professionals in the fossil fuel development field carried out during project development suggest that the most promising areas for AID assistance are likely to be:

1) reinterpretation of existing geophysical data, using state-of-the art techniques;

2) assistance in the preparation of comprehensive exploration plans for participating countries;

3) evaluation of participating countries' manpower requirements, and development of a program to provide any necessary training (in collaboration with the AID Training for Conventional Energy project);

4) institutional development and support for government ministries, geological institutes, or governmental fuels corporations;

5) new data acquisition through remote sensing and geophysical studies.

Items 2-4 above essentially involve the consulting services of specialists in oil and gas exploration. Using figures developed in other AID projects and in the World Bank's fossil fuel lending program, it is estimated that such services would cost $10,000 per man month.

Institutional support might also involve purchase of computer systems, software and terminals, and support for managerial or technical training activities in the participating institutions. It is not possible to estimate the cost of such assistance without knowing the precise nature of the assistance, but the institutional support component of a typical country project might cost anywhere from $50,000 to $500,000.

Since the Inter-American Development Bank is embarking on an offshore seismic survey encompassing the entire continental shelf of Central and South America (except Mexico) and the shelves surrounding nearly all the Caribbean nations (except Cuba), AID is unlikely to be involved in any offshore seismic surveys in Latin America. If AID-funded seismic work appears warranted in onshore areas of Latin America or in Asia or Africa (onshore or offshore), economies of scale will require that such surveys be undertaken in clusters. By surveying contigious or at least relatively nearby offshore regions, the costs of deploying seismic ships, trucks or crews can be spread over all the countries involved. The sharply lower unit cost of offshore surveys ($420 per line mile, globally) compared with onshore surveys (averaging $3,185 per line mile worldwide) suggests that AID might more economically focus on offshore areas. Supporting three months worth of offshore seismic surveys each year would cost approximately $1 million and would yield approximately 2200 line miles of raw data (magnetic tape). Data processing for this level of effort would cost another $1.1 million.

AID's participation in seismic surveys is likely to be very limited, since this area is expensive, is available in the multi-lateral lending programs, and is unlikely to be the area where AID can make its most significant contribution. To the extent that AID does fund seismic surveys, AID's support need not be on a full-cost basis. In many if not most instances, it may be possible for seismic survey costs to be borne jointly by AID and the host country. The possibility of a joint venture involving AID, the host country and a private sector company or consortium should also be explored.

Project Cost Analysis. The earliest stages of the exploratory process -- that is, the kinds of activities to be funded under this project -- involve the highest degree of uncertainty, but lower investment costs than exploratory drilling. The costs of remote and ground-based pre-drilling exploration include amortized costs of airplanes, ships, trucks, computers and other capital equipment; operating costs for the same equipment; labor costs; and costs of transporting equipment and materials to the exploratory site. Many of these costs increase with the distance of deployment, and for most developing countries this means much higher costs than for similar operations in the United States or other countries where equipment is manufactured and commonly used, and where the necessary expertise can be found nearby in ample supply.

Costs associated with remote sensing for fossil fuel exploration include the purchase of satellite images and aerial photographs, the enhancement of images through digital computers and other techniques to emphasize the geological structures that are indicative of possible

hydrocarbon deposits, and the interpretation of enhanced images and photographs by experts. Satellite images are readily available from the EROS Data Center of the U.S. Geological Survey in Sioux Falls, South Dakota; costs range from $8.00 (for black and white film) to $400 (for computer-compatible tapes) per image. Each image covers an area of 13,225 square miles, and the number of images required to create a mosaic of a specific sedimentary basin depends, of course, on the size of the basin. For a hypothetical basin of 10,000 square miles, the required imagery (average cost $200 per image) would cost $200, digital enhancement would cost $1,000, and image interpretation would cost $5,000.

The Society of Exploration Geophysicists (SEG) publishes annual statistics on the costs and levels of activity in petroleum-related geophysical exploration throughout the world. Activities are reported in two general categories -- data acquisition (field surveys using seismic, magnetic or gravity techniques) and data processing and evaluation (office and laboratory work involving computers and other analytical tools). Costs for both categories are expressed in terms of the cost per line mile of data acquired and/or analyzed; for data acquisition, costs are also expressed in terms of monthly expenditures. Acquisition costs are also reported separately for land and marine seismic surveys, as shown in Table B-1. It can be seen that a month's worth of marine seismic surveys is considerably more expensive than a land survey over the same period, but because marine surveys can cover over ten times more miles per month than land surveys, the cost per mile is very much lower for marine surveys. Table B-1 shows the costs of land and marine surveys in the major developing regions and, for comparison, in the U.S. and the world as a whole.

Unit costs for reconaissance surveys using gravity or magnetic techniques are, not surprisingly, somewhat lower than those for seismic surveys. Tables B-2 and B-3 show SEG statistics for gravity and magnetic studies.

The SEG's information on data processing and evaluation costs is only estimated and is not broken down for each region. Its annual report for 1978 estimated these costs to be $400 per line mile in the western hemisphere and $500 per line mile in the eastern hemisphere. A recent article in the International Petroleum Times (January 15, 1980) reports that recent dramatic advances in the technology of geophysical data processing and evaluation have resulted in sharply increased costs, but also in quantum improvements in the quality and reliability of information that can be obtained prior to exploratory drilling. (See Technical Analysis.) New techniques are both capital- and labor-intensive, involving sophisticated computer capability and a substantial number of highly trained operators, programmers and program analysts. Furthermore, according to International Petroleum Times, the current worldwide boom in geophysical exploration -- stimulated largely by soaring oil prices -- also contributed to the rapid increases in the costs of both acquisition and evaluation of data. The demand for exploration services outstrips the available supply of equipment and expertise, the article states, with the result that geophysical contract prices are soaring. A seismic ship in use for offshore surveys now reportedly costs as much as $20-30,000 per day, and travel time to position the ship for a survey may cost as much as $500,000.

TABLE B-1

Average Regional Costs (US $) for

Land and Marine Seismic

Petroleum Surveys, 1978

		Miles/Month	Cost/Month	Cost/Mile
South America	Land	60	184,502	3,060
	Marine	755	306,654	405
Africa	Land	74	220,255	2,962
	Marine	661	336,304	508
Mid East	Land	63	192,713	3,045
	Marine	708	380,379	537
Far East	Land	56	122,276	2,181
	Marine	660	286,190	433
U.S.	Land	34	118,730	3,393
	Marine	662	291,767	440
Worldwide	Land	48	153,637	3,185
	Marine	732	308,090	420

Source: M.G. Whitmire, "Geophysical Activity in 1978", Geophysics, October 1979, pp. 1740-1754.

TABLE B-2

Average Regional Costs (US $) for

Gravity Reconnaissance

Petroleum Surveys, 1978

		Miles/Month	Cost/Month	Cost/Mile
South America	Land	112	12,224	108
	Marine	392	10,933	27
	Airborne	*	*	*
Africa	Land	*	*	*
	Marine	1,516	39,434	26
	Airborne	*	*	*
Middle East	Land	275	21,916	79
	Marine	1,067	29,041	27
	Airborne	*	*	*
Far East	Land	*	*	*
	Marine	*	*	*
	Airborne	*	*	*
U.S.	Land	219	18,174	82
	Marine	*	*	*
	Airborne	*	*	*
Worldwide	Land	200	19,331	96
	Marine	643	17,420	27
	Airborne	775	170,000	219

Source: Same as Table B-1

TABLE B-3

Average Costs (US $) for

Magnetic Reconnaissance

Petroleum Surveys, 1978

		Miles/Month	Cost/Month	Cost/Mile
South America	Land	*	*	*
	Marine	258	3,118	12
	Airborne	12,300	365,000	29
Africa	Land	*	*	*
	Marine	1,516	17,291	11
	Airborne	7,500	162,500	21
Middle East	Land	*	*	*
	Marine	1,067	11,958	11
	Airborne	55,093	100,000	1
Far East	Land	*	*	*
	Marine	*	*	*
	Airborne	*	*	*
U.S.	Land	200	10,000	50
	Marine	*	*	*
	Airborne	7,439	76,463	10
Worldwide	Land	235	10,294	43
	Marine	564	6,625	11
	Airborne	7,422	99,923	13

One approach to coping with these rising costs is the increasing prevalence of "group shoots", in which consortia of companies (sometimes in collaboration with participating governments) jointly purchase the exploration services and resulting data. Most companies still prefer to process the data individually, but on occasion they also purchase the processing and evaluation on a collaborative basis. This means that each company loses a certain competitive advantage, but in return, it receives a substantial amount of low-cost non-proprietary analyzed data.

It is also possible to purchase geophysical data gathered by others, and there are firms that specialize in marketing such data. The data may be in the form of raw magnetic tapes, or it may include (for a price) interpretive information. In some instances, developing countries have commissioned exploration consultants to develop and analyze data, with the country acquiring ownership of the resulting reports. In the case of Jamaica, for example, a consultant prepared a report on the country's geological potential for oil and gas; the national government sells copies of the report to interested companies for $8,000 apiece.

C. Social Analysis

The activities that will be undertaken in the course of this project will have little direct or immediate impact on the social or cultural environments of the countries involved. The process of identifying and evaluating indigenous conventional energy resources consists of a series of actions that take place, for the most part, in isolated field, laboratory or office environments and involve only a small cadre of specialists.

Achievements of the project's ultimate goal -- to increase the supply of indigenous sources of energy -- could appreciably improve social conditions for the people of countries where new supplies are found. Increased availability of energy can accelerate the development process, increase per capita GNP, generate employment, and enlarge government revenues that can be used for social programs. Making commercial fuels available to urban users at reasonable cost can also reduce pressures on the price and supply of traditional, non-commercial fuels in rural areas. Having petroleum resources available for use in the transport sector can improve poor people's access to markets for their agricultural produce and can facilitate their purchase of supplies and services. The project cannot, by itself, achieve such an increase in energy supply, but it can advance the process of exploration which is a necessary antecedent to such an increase.

Observations of rural life in developing countries demonstrate that women there spend much of their time engaged in tasks that employ traditional sources of energy -- fuelwood (of which they and their children are the primary gatherers) for cooking, and their own labor for grinding meal, drawing water, washing clothes, etc. Development of new energy sources for some of these tasks, such as grinding and pumping, can therefore have a substantial impact on women's lives. Additionally, the availability of mechanical energy can make possible the development of small industries employing both men and women in rural areas. Refrigeration for medicines, electricity to operate medical equipment, and telecommunications for educational purposes could also improve conditions for women. And once again, providing new energy sources for the urban market and thereby protecting rural supplies of firewood -- whose disappearance has already vastly increased the distances that women must walk to gather it -- can release women's time and energy for more productive purposes.

D. Environmental Analysis

Description of Project

The project will provide developing countries with technical assistance in exploring and evaluating their indigenous conventional energy resources and facilitating their access to technologies, services and capital that will ultimately permit the development and exploitation of those resources. AID will fund three general categories of activity:

1) Country-level preliminary resource assessments which will consist of a) review and analysis of existing geological data including geologic maps to determine what is known of the country's oil, gas and coal reserves and resources; b) survey of past, current and planned exploration work; c) survey of institutional and manpower capabilities in the area of conventional fuel exploraion; and d) identification of the appropriate next steps for further delineation of energy resources and reserves.

2) New field studies using geological and geophysical techniques to determine probable presence of hydrocarbons under land and sea, and -- in the case of coal -- to begin to determine the extent and value of the resources. In the case of oil and gas, exploratory activities will be limited to the pre-drilling stage; sediment sampling and shallow structural coring may take place in some instances, but deep drilling on geological structure for actual discovery of oil and gas will not be included.

3) Advisory services, in-country technical training, and institutional support for government entities involved in exploration and development of conventional energy resources.

Identification and Discussion of Impacts

Impacts have been identified in connection with only one of the three major categories of Project activities described under Section A above -- field studies using geological and geophyscial techniques -- and these impacts are minor. It should be recognized, of course, that countries assisted under the Project may be encouraged by favorable results of geological studies to continue with exploration and development of fossil fuels, and that the later (non-AID funded) phases of exploration and development involve the potential for environmental impacts of a much greater magnitude. These impacts include catastrophic accidents such as offshore oil well blowouts and oil spills, pollution of fragile marine ecosystems by drilling chemicals, desecration of large land areas through surface mining for coal, human safety and health hazards involved in deep coal mining, and land subsidence caused by onshore development of oil and gas, to name the most common. Since AID-funded activities under the Project cannot by themselves cause such impacts, they are not analyzed in any detail here. Nonetheless, AID will encourage host countries to consider the potential for such impacts in planning for further fossil fuel exploration and development, and will assist through the Project's technical advisory services and field studies in identifying localities where risks of such impacts appear especially high.

1. Oil and Gas

Pre-drilling geological and geophysical studies are basically environmentally benign. The activities involved in the early phases of oil and gas exploration usually proceed as follows:

Reconnaissance Surveys. These initial studies are usually carried out by air or, for some offshore areas, by ship. They involve measurements of changes in the earth's magnetic field and local variations in the earth's gravity. They may also involve visual inspection of the ocean surface to detect any natural oil seeps. Recently, satellite photography and infrared measurements (remote sensing) have also been employed. Reconnaissance surveys are used to determine the location of sedimentary basins that might contain hydrocarbons. Because remote techniques are used, reconnaissance surveys have no direct effect on the environment of the surveyed area other than to cause a temporary and minor increase in air or marine traffic in the area.

Seismic Surveys. Seismic surveys provide more detailed information about the configuration of geological structures under the earth's surface, giving oil companies and/or owners of the land areas involved enough data to decide whether or not to invest in exploratory drilling. Geophysical exploration experts bounce a series of sound waves off the geological strata and record the echoes on magnetic tape. By varying the frequency of the sound, they can record echoes at different subsurface depths. Later computers are used to combine the results into a cross-section of the geological structure, and several cross-sections are combined to create a three-dimensional image of the area. With the resulting "pictures", analysts can determine the types of sediment and rock that make up the structure and the location of the potential "traps" for oil or gas.

Until fairly recently, seismic surveyors generated sound waves by means of controlled dynamite blasts, and such blasts did cause environmental impacts, particularly in the marine environment. Ocean-bottom turbidity was caused, and some damage to marine life often occurred. Today, other methods are more often used. The most common is the generation of a continuous series of sound waves by an electronic vibrator connected by lines to a power source. In offshore areas, seismic survey ships drag lines carrying electronic vibrators and additional lines carrying hydrophones to pick up echoes. These recent technological advances have virtually eliminated the environmental impacts of seismic surveys.

The most significant technological break-throughs have come, however, in the computer analysis of seismic data. In some cases, trained analysts can be almost certain of the presence of hydrocarbons after examining the structural images. Oil companies can make reasonable judgements about the financial costs and benefits of further exploration, and can use the seismic data as the basis for a proposed monetary agreement with the owners of the resources. In some cases, however, additional studies may be required before a final decision is made to drill for oil or gas.

Stratigraphic Drilling and Coring. When actual examination of physical material is necessary to lend additional evidence of favorable prospects, stratigraphic drilling and coring may take place. This kind of drilling is not to be confused with exploratory drilling aimed at actual discovery of oil or gas. The purpose here is simply to determine the precise nature of the geological structure, including the location and depth at which so-called "source rocks" and "reservoir rocks" occur, if at all. Physical sampling of this sort is usually restricted to relatively shallow depths and to the edges of structures, in order to avoid an unintended discovery in advance of detailed financial calculations and negotiations of terms between explorers and owners. Taken together with seismic data the results of these tests are used to pinpoint the most promising locations for later exploratory drilling.

The environmental impacts of stratigraphic drilling and core sampling include local disturbance of the terrestrial or marine environment from noise, traffic, and -- in offshore areas -- potential pollution from drilling mud and disturbance of life at the ocean floor. But since only one or two holes are typically drilled on each major structure, these impacts remain minor and temporary.

AID's involvement in oil and gas exploration will not include actual exploratory drilling. The information gained from pre-drilling studies should be sufficient to enable host countries and exploration firms to determine whether or not a large commitment of investment capital is justified at that point.

A further note about the exploration environment in many developing countries is necessary here, however. Harsh environmental conditions and remote locations -- the central African desert and the Amazon basin, for example -- are among the major constraints on exploration of promising sedimentary basins in the developing world. Even seismic surveys in such locations cost several times the figures that are typical in Texas, or even in the North Sea and the Middle East. Lack of infrastructure necessitates bringing in all supplies, usually by air. Temporary work camps may be established. These activities also involve environmental impacts, but again the impacts only become major and long-term upon actual discovery of oil or gas.

2. Coal

Coal exploration involves techniques that are similar to those used in some phases of oil and gas exploration, but the seismic phase is usually omitted. Geological maps indicate the location of geological structures that appear favorable for coal resources. Field studies of these structures can often confirm the presence of coal -- but not its extent or quality -- through detection of visible outcroppings of coal on the ground surface. In other cases, trial boreholes in geologically favorable locations can confirm the presence of coal. By drilling a number of boreholes on the structure, coal exploration experts can infer the extent of a coal seam within the structure and make a rough calculation of "indicated" reserves. If,

however, the structure appears to have faults and discontinuities, it may not be possible to determine in the initial drilling program whether or not the coal seam covers the entire area; in this case, the reserves are classified as "potential" rather than "indicated".

Core samples from borehole drilling are analyzed in a laboratory to determine the "rank" and quality of a coal seam. "Rank" is the term used to describe the fixed carbon content of coal, with the highest rank (highest fixed carbon) given to anthrocite, descending through bituminous, sub-bituminous, lignite and peat. The sample is also studied to determine its moisture content (which affects its potential to produce heat), its mineral content (which determines the amount of ash) and in particular its sulfur content (which determines the level of air pollution that will result from burning coal, as well as the cost of controllling the sulfur emissions).

The final stage of coal exploration is the delineation of the coal seam with sufficient precision to make economic investment decisions. The reserves are "proven" by means of an extensive drilling program producing a grid of boreholes close enough together to confirm the seam's continuity. The depth of the seam is also determined. Resource economists can then assess market potential (which depends on the rank and quality of the coal and the uses for which it is appropriate), transportation costs, infrastructure requirements, pollution control costs, and other investment-related information.

The adverse environmental impacts of coal exploration are similar to those resulting from the early phases of oil and gas exploration, and are similarly temporary and minor. Field studies, including drilling programs, do involve the intrusion of people and heavy equipment, the generation of noise, and limited physical disturbance of the ground (possibly including wildlife habitat). The extent of these impacts depends very much on the local environment in which the exploration activities are undertaken. They are likely to be most severe in remote locations and fragile ecosystems such as tropical forests. Social and cultural environments of the local population may be disturbed by the sudden arrival of an outside work force. All these impacts are temporary, however, and connot compare in their significance with the impacts of actual mining and burning of coal. Once again, AID's role will include the provision of information and counsel on the potential impacts of these downstream activities, even though AID will not fund the extractive phase of coal development.

Conclusion

Review of the activities expected to be undertaken reveals evidence of only minor and insignificant negative impacts on the natural and human environment. Such impacts are not expected to be irrevocable, long-lasting or highly controversial. Activities undertaken within this Project may, however, lead to additional work in fossil fuels exploration, development, production and distribution which could involve significant adverse effects on the environment. That additional work is not expected to be supported by funds of the United States Government.

Recommended Environmental Action

In light of the insignificant and temporary nature of environmental impacts that may result from activities under this Project, no further environmental analysis appears necessary or warranted. It is recommended, therefore, that a negative determination be issued in accordance with Section 102 (C) (3) of the National Environmental Policy Act of 1969 (NEPA). It is recommended, however, that field studies and advisory services under this Project include the gathering and dissemination to host governments of information regarding the environmental hazards that may be posed by later stages of conventional energy exploration and development, particularly where local conditions indicate a potential for environmental impacts significantly affecting the quality of the human environment.

E. Financial Analysis, Plan and Budget

Total project cost, over the period FY 1980 - 1983 will be $13,750,000. The operational phase of the project will not begin until FY 1981, with FY 1980 costs allocated solely to the RSSA/PASA with the U.S. Geological Survey so that the Survey can begin work on the Needs and Targets Study immediately following project approval. Costs will be divided among the following categories: USGS PASA for special assistance services; project management; project advisory committee; and country-level projects. The last category will, of course, account for the major share of project costs.

Annual budgets are indicated below.

FY 1980

RSSA/PASA with USGS	$ 250,000	
ANNUAL TOTAL	250,000	

FY 1981

RSSA/PASA with USGS	275,000	(10% inflation)
Project Management (primary contractor)	250,000	
Advisory Committee	50,000	
Country-level sub-projects 3 sub-projects @ average cost of $975,000	2,925,000	
ANNUAL TOTAL	$3,500,000	

FY 1982

RSSA/PASA with USGS	$ 302,500	(10% inflation)
Project Management (primary contractor)	275,000	(10% inflation)
Advisory Committee	55,000	(10% inflation)
Country-level sub-projects 3 sub-projects @ average cost of $1,289,167	3,867,500	
ANNUAL TOTAL	$4,500,000	

FY 1983

RSSA/PASA with USGS	330,250	(10% inflation)
Project Management (primary contractor)	302,500	(10% inflation)
Advisory Committee	60,500	(10% inflation)
Country-level sub-projects 4 sub-projects @ average cost of $1,201,687	4,806,750	
ANNUAL TOTAL	$5,500,000	

PART IV: IMPLEMENTATION PLANNING

A. Administration Arrangements

The small staff and broad mandate of the Office of Energy preclude in-house management of the project on a day-to-day basis. In addition to the administrative functions that must be performed in connection with any AID project, this project requires the participation of persons with a high degree of specialized knowledge in a field not normally represented in AID, namely fossil fuel exploration and development. Consequently, day-to-day project management will be carried out by means of a contractual arrangement between DS/EY and an outside organization.

The management contractor will be selected through AID's normal contracting processes, including competitive bidding in response to a Request for Proposal (RFP). DS/EY staff will, however, maintain a close supervisory relationship with the project management entity. In addition, the Office of Energy will receive advice and evaluation assistance from a project advisory committee to be formed for assistance to this project. Members are expected to include representatives of private industry, academia, and government.

The duties and responsibilities of the project management entity will include the following:

1) In close consultation with DS/EY, the contractor will review AID recipient countries' requests for assistance under the project. The contractor will make recommendations to AID to approve or deny the request for assistance, based on the criteria listed in the detailed descriptive section of this paper. In addition, the contractor will prepare a brief report for AID review describing the host country's stated needs and interests and providing a preliminary asssistance plan, including cost estimates.

2) Upon a decision by AID to undertake a country-level activity, contractor will locate and, with approval of AID and the host country, obtain the services of appropriate experts to develop in detail and to implement the assistance activities for participating countries. Contractor will also:

3) Administer and monitor the assistance activities while in progress.

4) Receive any products of the assistance activities (such as written reports) and forward them to DS/EY along with any appropriate evaluative comments or conclusions, including recommendations for further assistance, if appropriate.

5) Prepare and forward to DS/EY periodic summary reports, policy statements and in-house evaluations to assist DS/EY in determining the success of the project in meeting the stated goals.

6) Cooperate with the project's advisory committee and with any outside evaluation team for the project as requested to do so by DS/EY.

In order to carry out its responsibilities successfully, the project management contractor must possess the following qualifications:

1) Administrative. Contractor must have adequate staff and organizational structure to provide the necessary administrative services, including but not limited to keeping within project budgets and schedules; keeping complete and accurate records; hiring, processing and compensating subcontractors efficiently and quickly.

2) Managerial. Contractor must have clear understanding of overall project goals and objectives and of the relationship of individual project activities to them -- i.e., a sense of where the project is and should be going, and how to get there.

3) Substantive. Contractor must have within its organization, or have access to through a well-established network of contacts, experts of high quality and sufficient quantity in such areas as remote sensing, geophysics, petroleum geology, computer science, petroleum and mining engineering, economics, and management (particularly project management and organizational development). Contractor must also have extensive experience (and access to additional expertise) in the energy and economic issues affecting developing countries, preferably including field experience in LDCs.

AID will also enter into a PASA with the U.S. Geological Survey, so that the Survey can provide certain specialized service to the project. Such services may include (but not be limited to):

1) Carrying out the Needs and Targets Study, as described earlier;

2) Assisting with country-level preliminary resource assessments by ascertaining in detail and reporting on the present status of the subject country's basic geologic data, including geologic maps;

3) Evaluating the country's institutional and manpower capabilities

4) Undertaking selected technical activities such as geologic mapping, including mapping based on Landsat images;

5) Helping to strengthen recipient countries' resource assessment capabilities through application of and training in remote sensing. This function is expected to include USGS training of LDC nationals through regularly scheduled international workshops at the Survey's Earth Resource Observation System (EROS) Data Center.

USGS is the leading US government agency in the geological and geophysical aspects of fossil fuel exploration. It is the repository for large quantities of geological data related to conventional fuel resources in the United States and abroad. Among the specific strengths in experience and expertise that USGS brings to the project are the following:

1) A large cadre of mineral and energy resource experts in a wide range of disciplines required by the project such as geologic mapping, remote sensing, laboratory analysis of geochemical data, energy and mineral resource exploration, seismology, geologic and geophysical institution building, and mineral extraction engineering.

2) Thirty-five years of experience in international activities carried out in support of programs of other federal agencies, including technical assistance projects in more than 70 countries on behalf of, or authorized by AID or its predecessor agencies. USGS has provided technical assistance in energy studies to proejects funded by AID in the following countries:

Argentina - Evaluation of coal resources.

Bangladesh - Reconnaisance of peat deposits, and evaluation of quality of deep coal, as part of Pakistan Cooperative Project.

Brazil - Evaluation of resources, and exploration methods for uranium, and for coal.

CENTO Countries - Participation in various seminars, symposia and resource compilations for coal.

El Salvador - Identification and evaluation of geothermal target areas.

Greece - Evaluation of coal resources.

India - Geologic studies of Cuddapah Basin, relating to its potential as a source of petroleum.

Indonesia - Identification of areas to be tested for their geothermal energy potential on Java and establishment of drilling program to test them.

Jordon - Assessment of quantity and quality of oil shale.

Kenya - Applications of remote sensing in identifying sources of geothermal energy.

Korea - Geologic studies to estimate coal resources.

Liberia - Geophysical studies of Continental margins of Liberia, leading to petroleum exploration.

Mexico - Evaluation of quantity and quality of coal resources.

Nicaragua - Evaluation of geothermal potential.

Pakistan - Broad geological studies leading to assessment of coal and uranium resources.

Philippines - Evaluation of coal resources.

Peru - Evaluation of quantity and quality of coal resources.

Thailand - Evaluation of the Mae Lao lignite deposits.

3) Field studies, provision of resource data, and analysis of it, in Department of Energy cooperative studies in:

Argentina
Egypt
Korea
Mexico
Peru
Portugal

and desk studies of energy resources in:

Pakistan
Turkey

The U.S. Geological Survey's assistance to the project will be coordinated by the Office of International Geology within the Geological Division. That office will draw on additional expertise in the Office of Energy Resources within the same division, and on the Conservation Division, which has responsibility for overseeing and regulating offshore oil and gas development in the U.S. outer continental shelf.

Other Participating Organizations

The actual field work to be carried out under the project will require the services of a wide variety of individual consulting specialists and sub-contracting firms. Selection of such sub-contractors will be made by the contractor, with approval of AID. The contractor will need to maintain a broad network of contacts with such experts. The project advisory committee is also expected to be helpful in this regard. In addition, DS/EY and the contractor have informal contacts with a number of professional societies representing experts in this field, such as the American Association of Petroleum Geologists, the American Institute of Mining Engineers, the GEOSAT Committee and the Society of Exploration Geophysicists. The two last-mentioned deserve more detailed description here.

The GEOSAT Committee is a non-profit organization comprised of spokesmen for approximately 100 private companies interested in applications of satellite technologies to civilian scientific and business purposes. A number of major and independent oil companies, as well as drilling companies, petroleum consulting firms, engineering firms and mining corporations are members of GEOSAT. DS/EY has held discussions with GEOSAT and has concluded that the committee can be helpful in the remote sensing components of the project in an advisory capacity.

The Society of Exploration Geophysicists is a private, non-profit professional scientific society whose 14,000 members represent a broad cross-section of the science of geophysics in both industry and academia. Over 100 countries are represented in the membership, including 30 of the 63 countries currently receiving development and economic support assistance from AID. While most members are individuals, the Society also has 250 corporate members, and informal ties with approximately 450 colleges and universities offering degrees in various branches of the earth sciences, and particularly in geophysics. Students in such programs begin their association with the Society as student members; 1,100 student members are currently enrolled. SEG sponsors scholarships for students in the geophysical field, including some for scholars from foreign countries.

The SEG membership encompasses most of the working geophysicists in the United States, and of these by far the majority are engaged in some aspect of petroleum exploration. A smaller share are involved in geophysical work related to coal or to geothermal exploration. Other than the academic members, most are employed by firms such as seismic exploration contractors, data analysts, equipment suppliers, research and development firms, and consulting firms. Approximately 300-400 are retired, but still active as independent consultants. A number of these consultants have been employed by developing countries in activities such as designing fossil fuel exploration plans.

B. Implementation Plan

DS/EY's initial tasks on project approval will be to conclude a RSSA/PASA with the U.S. Geological Survey and to assist USGS in getting the Needs and Targets Study underway. That study is expected to be concluded by April 1981. During the study period, DS/EY will proceed with formation of an advisory committee and with solicitation of competitive bids for the project management contractor. In-country sub-projects are expected to begin late in FY 1981, with three sub-projects undertaken in FY 1981, three additional sub-projects in FY 1982, and four additional in FY 1983.

The major steps to be undertaken in project implementation are listed below.

Action	Responsibility*	Completion Date
PP Approved, AID Missions Notified	AID/W	8/80
PASA with USGS Signed	AID/W	9/80
Advisory Committee Selected	AID/W	10/80
RFP Issued for Project Management Contractor	AID/W	10/80
Proposals Reviewed & Contractor Selected	AID/W	1/81
Management Contract Signed	AID/Contractor	3/81
Needs and Target Study Report Due	USGS	4/81
Detailed Discussions with Missions & Host Governments to Develop Three Country-Level Sub-Projects for FY 1981	Contractor/AID	4/81 to 7/81
Advisory Committee Meets	AID/Contractor	5/81
Sub-Project Designs Completed	Contractor/AID	6/81 to 8/81
Subcontractors Selected Sub-Projects Underway	Contractor/AID	9/81
First Year In-House Evaluation	AID/Contractor	10/81
Advisory Committee Meets	AID/Contractor	11/81
Sub-Project Monitoring	Contractor/AID	Ongoing from 10/81

Action	Responsibility	Completion Date
Detailed Discussions with Missions & Host Governments to Develop Three Country-Level Sub-Projects for FY 1982	Contractor/AID	12/81 to 4/82
Advisory Committee Meets	AID/Contractor	4/82
Sub-Project Designs Completed	Contractor/AID	3/82 to 6/82
Subcontractors Selected, Sub-Projects Underway	Contractor/AID	6/82 to 8/82
Second Year In-House Evaluation	AID/Contractor	10/82
Advisory Committee Meets	AID/Contractor	11/82
Detailed Discussions with Missions & Host Governments to Develop Four Sub-Projects for FY 1983	Contractor/AID	12/82 to 4/83
Advisory Committee Meets	AID/Contractor	4/83
Sub-Project Designs Completed	Contractor/AID	3/83 to 6/83
Subcontractors Selected, Sub-Projects Underway	Contractor/AID	6/83 to 8/83
Third Year In-House Evaluation	AID/Contractor	10/83
All Sub-Projects Completed	Contractor/AID	8/84
Final Project Evaluation	Evaluation Team	8/84

*Where more than one organization is mentioned, primary responsibility rests with the first-mentioned.

C. Evaluation Plan

The unusual nature of this project will require especially careful ongoing evaluation of project activities. Responsibility for ongoing evaluation will rest primarily with DS/EY, but the contractor will also be required to provide certain evaluative reports. In addition, the project advisory council will assist by reviewing and commenting on sub-contract designs and evaluation reports. A full-scale project evaluation, carried out by an independent team, will take place at the end of the final year of the project.

1. DS/EY Responsibility

DS/EY will prepare an annual in-house evaluation report for the project. The report will include:

- review of the project goals;
- review of the project activities undertaken during the preceding year, as they relate to the project goals;
- recommendations for change in project activities, emphasis, procedures, etc. for the coming year.

Material provided by the contractor (see below) will comprise a major input for the DS/EY evaluation.

2. Contractor Responsibility

The contractor will review and evaluate country-level sub-project activities, including the work of all subcontractors, each year and as each grant activity is completed. At the end of each fiscal year, the contractor will provide DS/EY with a summary report of project activities for the year, organized as follows:

- by country;
- by function (e.g., geophysical data acquisition; data processing and interpretation; advisory/consultative services; project management; etc.)

3. AID Mission Responsibility

The AID Missions will assist DS/EY in its evaluation by providing periodic communications regarding in-country activities and host government response.

4. Advisory Council Responsibility

The advisory council's role will be strictly advisory and not determinative of policy. The advisory council will however, provide valuable assistance to the evaluation process by offering to the project staff and contractor a cross section of independent opinions and by reviewing and commenting on DS/EY's evaluation report each year.