4970204 (10)

PD-AAD-777

Loan No. 497-H-024

38p.

LOAN AGREEMENT

(Indonesia: Semarang Steam Power Station)

BETWEEN THE

GOVERNMENT OF INDONESIA

AND

PERUSAHAAN LISTRIK NEGARA

AND THE

UNITED STATES OF AMERICA

Dated: November 3, 1971

TABLE OF CONTENTS

Section Number		Page
ARTICLE I	The Loan	1
SECTION 1.1	The Loan	1
SECTION 1.2	Project	1
ARTICLE II	Borrower Repayment Terms and Interest	2
SECTION 2.1	Interest	2
SECTION 2.2	Principal	2
SECTION 2.3	Application and Place of Payment	3
SECTION 2.4	Prepayment	3
ARTICLE III	Conditions Precedent	3
SECTION 3.1	Conditions Precedent to Initial Financing	3
SECTION 3.2	Conditions Precedent to Financing Construction Services	5
SECTION 3.3	Terminal Dates for Fulfillment of Conditions Precedent	6
SECTION 3.4	Notification of Meeting of Conditions Precedent	7
ARTICLE IV	Disbursements	7
SECTION 4.1	Requests for Letters of Commitment	7
SECTION 4.2	Other Forms of Disbursement	7
SECTION 4.3	Terminal Date for Requests for Commitment Documents and for Disbursements	7
ARTICLE V	Particular Covenants and Warranties Concerning the Project	8
SECTION 5.1	Borrower's Covenants	8
SECTION 5.2	Beneficiary's Covenants	9
ARTICLE VI	General Covenants, Warranties and Agreements	13
SECTION 6.1	Utilization of Eligible Items	13
SECTION 6.2	Information and Marking	13
SECTION 6.3	Notice of Material Developments	13
SECTION 6.4	Inspections	14
SECTION 6.5	Taxes and Duties	14
SECTION 6.6	Commissions, Fees and Other Payments	15
SECTION 6.7	Renegotiation of Terms	15
SECTION 6.8	Insurance	16
SECTION 6.9	Maintenance and Audit of Records	16
SECTION 6.10	Reports	17
SECTION 6.11	Investment Guaranty Project Approval by Borrower	17

Section Number		Page
ARTICLE VII	Covenants Concerning Procurement	17
SECTION 7.1	Procurement Source and Origin	17
SECTION 7.2	Date of Procurement	18
SECTION 7.3	Port Charges	19
SECTION 7.4	Small Business Notification	19
SECTION 7.5	Ocean Shipment	20
SECTION 7.6	Marine Insurance	20
SECTION 7.7	Employment of Contract Personnel	21
ARTICLE VIII	Remedies of A.I.D.	22
SECTION 8.1	Events of Default; Acceleration	22
SECTION 8.2	Termination of Disbursements; Transfer of Goods to A.I.D.	24
SECTION 8.3	Refunds	26
SECTION 8.4	Waivers	26
SECTION 8.5	Expenses of Collection	27
ARTICLE IX	Borrower Contribution to Beneficiary	27
SECTION 9.1	Terms of Contribution	27
SECTION 9.2	Rate of Exchange	28
ARTICLE X	Miscellaneous	31
SECTION 10.1	Designation of Representatives	31
SECTION 10.2	Implementation Letters	31
SECTION 10.3	Communications	31

LOAN AGREEMENT

AGREEMENT, dated the 3rd day of November, 1971 between the GOVERNMENT OF INDONESIA (hereinafter called the "Borrower"), PERUSAHAAN LISTRIK NEGARA (hereinafter called the "Beneficiary"), and the UNITED STATES OF AMERICA, acting through the AGENCY FOR INTERNATIONAL DEVELOPMENT (hereinafter called "A. I. D.").

ARTICLE I.

The Loan

SECTION 1.1. The Loan. A. I. D. hereby agrees to lend to the Borrower, for the use of and, under Section 9.1 hereunder, to be reloaned to the Beneficiary pursuant to the Foreign Assistance Act of 1961, as amended, up to nineteen million seven hundred thousand United States dollars ($19,700,000) to assist in financing the reasonable foreign exchange dollar costs of certain goods and services required for the Project as defined in Section 1.2 hereof. Goods and services financed hereunder are hereinafter referred to as "Eligible Items," and the aggregate amount disbursed hereunder is hereinafter referred to as "Principal."

SECTION 1.2. Project. As used in this Agreement, the "Project" shall mean the construction of a 100 megawatt (MW) steam power plant consisting of two 50-MW generating units and related facilities in the harbor area of Semarang, Central Java Province, Indonesia. Said Project shall also include technical assistance to

Beneficiary rela ed to the operation and maintenance of said steam power plant. A more detailed description of the Project is set forth in Annex "A" of this Agreement.

ARTICLE II.

Borrower Repayment Terms and Interest

SECTION 2.1. Interest. The Borrower shall pay semi-annually to A.I.D. in United States dollars on the unpaid Principal, interest which shall accrue from the dates of the respective disbursements hereunder, the first such interest payment to be due and payable no later than six (6) months after the first such disbursement on a date to be specified by A.I.D. Principal and interest due but not paid shall accrue interest at the maximum rate hereunder until fully paid. Interest shall accrue at the rate of two percent (2%) per annum for ten (10) years after the first disbursement hereunder and at a rate of three percent (3%) per annum thereafter, computed on the basis of a three hundred sixty-five (365) day year. Disbursements hereunder shall be deemed to occur on the date on which payment by A.I.D. is made either directly to the Borrower or its designee or to a banking institution pursuant to a commitment document.

SECTION 2.2. Principal. Borrower shall repay the Principal to A.I.D. in United States dollars within forty (40) years from the date of first disbursement hereunder in sixty-one (61) level semiannual installments of principal and interest, the first installment to be due and payable nine and one-half (9-1/2) years after the first interest payment is due.

SECTION 2.3. Application and Place of Payment. All payments shall be applied first to the payment of any interest due and unpaid and then to the repayment of Principal. All payments shall be made to the Controller, United States Agency for International Development (hereinafter called "USAID"), Djakarta, Indonesia, or to such other payee or at such other address as A.I.D. may designate, and shall be deemed to have been paid when there received.

SECTION 2.4. Prepayment. The Borrower shall have the right to prepay, without penalty, on any date on which interest is due, all or any part of the Principal. Any prepayment shall be applied first to the payment or any accrued and unpaid interest and then to the remaining installments of Principal in the inverse order of their maturity.

ARTICLE III.

Conditions Precedent

SECTION 3.1. Conditions Precedent to Initial Financing. Unless A.I.D. otherwise agrees in writing, prior to the issuance of the first letter of commitment or other commitment document for engineering services the Borrower or the Beneficiary, as appropriate, shall furnish A.I.D., in form and substance satisfactory to A.I.D.:

(a) An opinion of the Minister of Justice of the Borrower that this Loan Agreement has been duly authorized or ratified by, and executed on behalf of, the Borrower and is a valid and legally binding obligation of the Borrower in accordance with its terms;

(b) An opinion of the principal legal officer of the Beneficiary, or of other legal counsel satisfactory to A. I. D., that this Loan Agreement has been duly authorized or ratified by, and executed on behalf of, the Beneficiary and is a valid and legally binding obligation of the Beneficiary in accordance with its terms;

(c) The names of the persons who will act as the representatives of the Borrower and the Beneficiary pursuant to Section 10. 1 hereof, together with evidence of their authority and a specimen signature of each such person, certified as to its authenticity by either the persons rendering the legal opinions pursuant to Sections 3. 1(a) and 3. 1(b) or the persons executing this Loan Agreement;

(d) A draft contract between Beneficiary and a consulting engineering firm. The selection of said firm and the terms of said contract shall be in accordance with A. I. D. Capital Projects Guidelines for Engineering Services;

(e) Evidence that any rights of way, rights of entry, real property leases or acquisitions necessary for project implementation, plant operation and future plant expansion have been obtained or plans made and financing provided therefor.

SECTION 3.2. Conditions Precedent to Financing Construction Services. Unless A.I.D. otherwise agrees in writing, prior to the issuance of letters of commitment or other commitment documents for construction services, the Borrower or Beneficiary, as appropriate, shall have met the conditions precedent in Section 3.1, and in addition Beneficiary shall furnish to A.I.D. in form and substance satisfactory to A.I.D.:

(a) Evidence of the establishment by Beneficiary of a reserve fund in Indonesian currency equal to the total Indonesian currency costs of the Project for the upcoming 6 months as estimated by the consulting engineer, said funds to be replenished to the appropriate level quarterly, or more often in the event actual Indonesian currency expenditures substantially exceed said estimates, or such lesser amount as A.I.D. shall agree to in writing, which shall be used for the execution of the Project;

(b) A final design for the Project and bidding documents for construction services, including a refined cost estimate divided into U.S. dollars and Indonesian currency expenditures;

(c) A draft contract between Beneficiary and a construction firm. The selection of said firm and the terms of said contract, shall be in accordance with A.I.D. Capital Projects Guidelines for Construction Services;

(d) A plan for implementation of the Project, including provision for the training of personnel and a specific schedule of site preparation;

(e) Procurement contracts for equipment and materials between Beneficiary and firms. The terms of said contracts and the selection of said firms shall be subject to A.I.D. approval prior to the execution of the contracts and selection of the firms, where appropriate, and in accordance with A.I.D. Capital Projects Guidelines for the Procurement of Equipment and Materials.

SECTION 3.3. Terminal Dates for Fulfillment of Conditions Precedent. Except as A.I.D. may otherwise agree in writing, if the conditions required by Section 3.1 have not been satisfied within four months after the date of execution of this Loan Agreement, or if the conditions required by Section 3.2 have not been satisfied with twenty-three months after the date of execution of this Loan Agreement, A.I.D. may at any time thereafter terminate this Agreement by giving notice to the Borrower and to the Beneficiary. Upon such termination, and notwithstanding any other provisions of this Loan Agreement, the Borrower shall repay to A.I.D. the unpaid Principal, if any, and any accrued interest. Upon full payment in accordance with the foregoing, all other obligations of the Borrower and A.I.D. under this Agreement shall cease.

BEST AVAILABLE COPY

SECTION 3.4. Notification of Meeting of Conditions Precedent. A.I.D. shall notify the Borrower and Beneficiary upon its determination that the conditions precedent specified in Sections 3.1 and 3.2 have been met.

ARTICLE IV.

Disbursements

SECTION 4.1. Requests for Letters of Commitment. To obtain disbursements, the Beneficiary may from time to time request A.I.D. to issue, and subject to the provisions of this Loan Agreement A.I.D. shall issue, letters of commitment to one or more banks in the United States designated by the Beneficiary and satisfactory to A.I.D., committing A.I.D. to reimburse such bank or banks for payments made, through letters of credit or otherwise, to the Beneficiary or any designee of the Beneficiary, pursuant to such documentation or requirements as A.I.D. may specify.

SECTION 4.2. Other Forms of Disbursement. Disbursements may also be made through such other means as the Borrower, the Beneficiary and A.I.D. may agree in writing.

SECTION 4.3. Terminal Date for Requests for Commitment Documents and for Disbursements. Except as A.I.D. may otherwise agree in writing, no letters of commitment or other commitment documents shall be issued in response to requests received by A.I.D. after forty-eight months, and no disbursements shall be made against documentation received after seventy-two months, from the date of execution of this Loan Agreement.

BEST AVAILABLE COPY

ARTICLE V.

Particular Covenants and Warranties Concerning the Project

SECTION 5.1. Borrower's Covenants. The Borrower covenants and agrees that it shall:

(a) take all necessary actions to permit the Beneficiary to perform its obligations under Article II of the Project Agreement between the Beneficiary and the International Development Association (Credit Number 165 IND) within the time limits prescribed in said Project Agreement or such other time limits to which IDA may agree, taking into account Borrower's specific undertakings in this regard in the development Credit Agreement between Borrower and the International Development Association and the objectives stated in Section 5.2(a) hereof;

(b) take all necessary action for accomplishment of the general objectives stated in Section 5.2(a) hereof;

(c) make available foreign exchange to Beneficiary from sources other than the proceeds of this Loan to purchase third country equipment necessary to complete site preparation and earthwork for the Project;

BEST AVAILABLE COPY

(d) make available to Beneficiary any Indonesian currency necessary for the completion of the steam power plant described in Section 1.2 above;

(e) from completion of the steam power plant described in Section 1.2 above until such time as Beneficiary may become an autonomous, non-budget supported corporation, assist the Beneficiary in obtaining funds sufficient to meet the operating and maintenance expenses necessary for the effective utilization of said plant;

(f) assist the Beneficiary to carry out the Project, or cause the Project to be carried out, with due diligence and efficiency, and in conformity with sound engineering, construction, financial, administrative, and management practices, and any plans, specifications, contracts, schedules and other arrangements, together with all modifications therein, approved by A.I.D. pursuant to this agreement.

SECTION 5.2. Beneficiary's Covenants. The Beneficiary covenants and agrees that it shall:

(a) Perform its obligations as prescribed in Article II of the Project Agreement with the International Development Association (Credit Number 165 IND) and implement said undertakings within the time limits prescribed in said

Project Agreement, or as A.I.D. may agree otherwise with respect to application of this covenant. In carrying out the recommendations of the management consultants under Section 2.02(b) of the Project Agreement with the International Development Association, Beneficiary agrees to the following general objectives that should govern Beneficiary's organization, structure, authority and operations and further agrees that Beneficiary's program to implement the recommendations of the management consultants as required by Section 2.02(b) of that agreement shall be in accordance with the objectives hereafter set forth and that said program shall be as Borrower, Beneficiary and A.I.D. shall consider appropriate;

(i) A revised schedule of electricity tariffs and charges fixed at such levels as should provide Beneficiary with revenue sufficient (a) to cover all its operating expenses, including administration and overhead expenses, maintenance, depreciation, and taxes, and interest on, and to the extent it exceeds depreciation, amortization of debt, and (b) to provide a reasonable return on its assets and to finance a reasonable portion of its capital expenditures.

(ii) A revaluation of Beneficiary's fixed assets in accordance with sound public utility practice;

(iii) Full and exclusive responsibility vested in Beneficiary for the public electric power sector of the Borrower, including planning, procurement, construction, operation, maintenance and ownership of all facilities therein;

(iv) Management organization and employment practices including staffing patterns, salary structure and employee qualifications, in accordance with sound public utility practice;

(v) Operating practices, including records, accounting system, billing and collection procedures, financial planning and administration, insurance, repair and maintenance procedures, and procedures for systems operations, all in accordance with sound public utility practice;

(vi) Standards for the electric power system including standards for equipment, materials, construction, and operation and maintenance in accordance with sound public utility practice.

(b) Replenish the Indonesian currency reserve fund required in Section 3.2(a) hereof whenever necessary to maintain said fund at the level set forth in Section 3.2(a) hereof;

(c) Carry out the Project, or cause the Project to be carried out, with due diligence and efficiency, and in conformity with sound engineering, construction, financial, administrative and management practices, and any plans, specifications, contracts, schedules and other arrangements, and with all modifications therein, approved by A.I.D. pursuant to this Agreement.

(d) Except as A.I.D. may otherwise agree in writing, furnish to A.I.D. for its approval:

(1) All plans, specifications and construction schedules related to the Project, and any modifications thereof, prior to their implementation;

(2) All bid documents and documents concerning the solicitation of proposals relating to the goods and services financed under the Loan, and any modifications thereof, prior to their issuance;

(3) All contracts financed under the Loan, and any modifications thereof, prior to their execution.

(e) Adequately maintain, repair, and operate, in accordance with sound public utility practice, all Eligible Items, and any facilities constructed in connection with their use.

BEST AVAILABLE COPY

ARTICLE VI.

General Covenants, Warranties and Agreements

SECTION 6.1. Utilization of Eligible Items. All Eligible Items shall be used exclusively in carrying out and operating the Project. This restriction shall apply only until such time as such goods can no longer be usefully employed for the Project, provided that no goods financed hereunder shall be exported from the Republic of Indonesia without the prior written approval of A.I.D., and provided further that no Eligible Items shall at any time be used to promote or assist any project or activity associated with or financed by any country not included in Code 935 of the A.I.D. Geographic Code Book as in effect at the time of such projected use except with the prior written consent of A.I.D.

SECTION 6.2. Information and Marking. The Beneficiary shall give publicity to the Loan provided for herein and the Project as a program of United States aid, identify the Project site, and mark goods financed under such Loan as prescribed in Implementation Letters.

SECTION 6.3. Notice of Material Developments. The Borrower and the Beneficiary have disclosed to A.I.D. all circumstances which may materially affect the Project or the discharge of their obligations under this Loan Agreement, and shall inform A.I.D. of any conditions which may constitute a default hereunder or which interfere, or which it is reasonable to believe may interfere, with the Project or the discharge of any of their obligations hereunder.

SECTION 6.4. Inspections. The authorized representatives of A.I.D. shall have the right at all reasonable times, whether prior to completion of the Project or subsequent thereto, to inspect the Project, the utilization of all Eligible Items, the books and records referred to in Section 6.10 and any other documents, correspondence, memoranda, or records relating to the Loan provided for herein or to the Project. The Borrower and the Beneficiary shall cooperate with A.I.D. to facilitate such inspections and shall afford a reasonable opportunity for authorized representatives of A.I.D. to visit any part of the Republic of Indonesia for any purpose related to the Loan provided for herein.

SECTION 6.5. Taxes and Duties. The Borrower covenants and agrees that this Loan Agreement and the Loan provided for herein shall be free from, and the Principal and interest shall be paid to A.I.D. without deduction for and free from, any taxation or fees imposed under any laws or decrees in effect within the Republic of Indonesia or any such taxes or fees so imposed or payable shall be reimbursed by the Borrower. To the extent that (a) any contractor, including any consulting firm, any personnel of such contractor financed hereunder, and any property or transactions relating to such contracts and (b) any commodity procurement transaction financed hereunder, are not exempt from identifiable taxes, tariffs, duties and other levies imposed under laws in effect in the country of the Borrower, the Borrower shall pay or reimburse the same under Section 5.1(d) of this Agreement with funds other than those provided under the loan.

SECTION 6.6. Commissions, Fees and Other Payments. The Borrower and the Beneficiary warrant and covenant that in connection with obtaining the Loan Agreement they have not paid and will not pay or agree to pay nor to the best of their knowledge has there been paid or will there be paid or agreed to be paid by any other person or entity, commissions, fees or other payments of any kind, except as regular compensation to the Borrower's or the Beneficiary's full-time officers and employees or as compensation for bona fide professional, technical or other comparable services. The Borrower and the Beneficiary shall promptly report to A.I.D. any payment or agreement to pay for such bona fide professional, technical or comparable services to which it is a party or of which it has knowledge (indicating whether such payment has been made or is to be made on a contingent basis), and if the amount of any such payment is deemed unreasonable by A.I.D., the party concerned shall cause a reduction satisfactory to A.I.D. to be made therein.

SECTION 6.7. Renegotiation of Terms. The Borrower agrees that at any time or times when it is required to do so by A.I.D., but not sooner than six (6) months prior to the date the first repayment of Principal is due, it will negotiate with A.I.D. with respect to acceleration of the repayment of Principal by the Borrower. It is agreed that the Borrower and A.I.D. shall mutually determine to what extent repayment of such Principal should be accelerated on the basis on one or more of the following criteria:

(a) significant improvement in the internal economic and financial situation of the Republic of Indonesia;

(b) favorable trends in the balance of payments and foreign exchange holdings of the Republic of Indonesia;

(c) ability of the Republic of Indonesia to make future repayment of A.I.D. loans without interfering with the service of debts owing to any United States Government agency or any international organization of which the United States is a member.

SECTION 6.8. Insurance. Beneficiary covenants that it will maintain prudent insurance coverage issued by responsible underwriters in such amounts and against such risks as is considered to be in accordance with good commercial practice.

SECTION 6.9. Maintenance and Audit of Records. The Beneficiary shall maintain, or cause to be maintained, in accordance with sound accounting principles and practices consistently applied, books and records relating both to the Project and to this Loan Agreement. Such books and records shall, without limitation, be adequate to show:

(a) the receipt and use made of Eligible Items;

(b) the progress of the Project;

(c) current data covering operation; and

(d) financial condition of the Beneficiary.

Such books and records shall be regularly audited by independent public accountants acceptable to A. I. D., in accordance with sound auditing standards, on an annual basis or for such period and at such intervals as A. I. D. may require, and shall be maintained for five years after the date of the last disbursement by A. I. D. or until all sums due A. I. D. under this Loan Agreement have been paid, whichever date shall first occur.

SECTION 6.10. Reports. The Borrower and the Beneficiary will furnish A. I. D. with such information and reports relating to the Project, Eligible Items, and the Loan provided for herein as A. I. D. may reasonably request.

SECTION 6.11. Investment Guaranty Project Approval by Borrower. The Borrower agrees that the construction work to be financed under this Agreement is a project approved by the Borrower pursuant to the Agreement between the Government of Indonesia and the Government of the United States of America, dated January 7, 1967, on the subject of investment guaranties, and no further approval by the Borrower shall be required to permit the Government of the United States of America under that agreement to issue investment guaranties covering a contractor's investment in that project.

ARTICLE VII.

BEST AVAILABLE COPY

Covenants Concerning Procurement

SECTION 7.1. Procurement source and Origin. (a) Except as A. I. D. may otherwise agree in writing and except as provided in

Section 7.6 herein for marine insurance, all Eligible Items, including transportation services, shall have both their source and origin in those countries noted as eligible under Code 941 of the A.I.D. Geographic Code Book as in effect at the time orders are placed or contracts are entered into for such Eligible Items. Transportation services shall be deemed to have their source and origin in such countries if procured from a flag carrier registered in any of such countries.

(b) All other goods and services obtained for the Project but not financed by A.I.D., except transportation services, shall have their source and origin in countries included in Code 935 of the A.I.D. Geographic Code Book as in effect at the time such goods or services are procured. In addition to the ocean shipment requirement of Section 7.5 hereunder, all Eligible Items shall be transported to Indonesia on carriers of countries included in the said Code 935 as in effect at the time such transportation is procured. This covenant shall be construed in accordance with A.I.D. regulations as from time to time amended.

SECTION 7.2. Date of Procurement. Except as A.I.D. may otherwise agree in writing, no goods or services may be financed hereunder which arise out of orders or contracts firmly

placed or entered into prior to the date of this Loan Agreement.

SECTION 7.3. Port Charges. With respect to transportation services that constitute Eligible Items, A.I.D. will finance under the Loan ninety percent (90%) of all ocean freight costs of each shipment, and ninety-eight percent (98%) of such costs on any shipment under free-out terms. The remaining ten percent (10%), or two percent (2%) of free-out shipments, represent port charges in Indonesia, and Borrower covenants that it shall make available foreign exchange to finance said port charges in accordance with such rules and procedures as A.I.D. may prescribe in Implementation Letters.

SECTION 7.4. Small Business Notification. In order that American small business shall have the opportunity to participate in furnishing Eligible Items, Beneficiary or Borrower, as appropriate, shall, at such time prior to ordering or contracting for any Eligible Item estimated to cost more than the equivalent of Five Thousand, United States dollars ($5,000) as A.I.D. may specify, cause to be received by A.I.D. such information concerning Eligible Items as A.I.D. may require.

SECTION 7.5. Ocean Shipment. At least fifty percent (50%) of the gross tonnage of all Eligible Items (computed separately for dry bulk carriers, dry cargo liners, and tankers) which shall be transported on ocean vessels shall be transported on privately owned United States flag commercial vessels. No goods may be financed hereunder which are transported on any ocean vessel or aircraft (a) which A.I.D. in a notice to the Borrower and the Beneficiary has designated as ineligible to carry A.I.D. - financed commodities or (b) which has been chartered for the carriage of A.I.D. - financed commodities unless such charter has been approved in advance by A.I.D.

SECTION 7.6. Marine Insurance. (a) Marine insurance may be financed under the Loan provided (i) such insurance is placed at the lowest available competitive rate in the Republic of Indonesia or any country noted as eligible under Code 941 of the A.I.D. Geographic Code Book as in effect at the time of placement, and (ii) claims thereunder are payable in dollars or other freely convertible currency.

(b) If in connection with the placement of marine insurance on shipments financed under United States legislation authorizing assistance to other nations, the Republic of Indonesia, by statute, decree, rule or regulation, favors any insurance company authorized

to do business in any state of the United States, goods financed hereunder shall during the continuance of such discrimination be so insured in the United States with a company or companies authorized to do a marine insurance business in any state of the United States of America.

SECTION 7.7. Employment of Contract Personnel. The employment of personnel to perform services under contracts financed hereunder, in whole or in part, will be subject to all applicable United States legislation and such regulations as A.I.D. may from time to time promulgate or specify, including security clearances and limitations on the employment of nationals of countries other than the Republic of Indonesia and countries noted as eligible under Code 941 of the A.I.D. Geographic Code Book, as in effect at the time orders are placed or contracts are entered into for such personnel; and, except as A.I.D. may otherwise direct, all such contracts shall include provisions necessary to implement such legislation and regulations.

ARTICLE VIII

Remedies of A.I.D.

SECTION 8.1. Events of Default; Acceleration. If any one or more of the following events ("Events of Default") shall occur:

(a) the Borrower or the Beneficiary shall fail to pay in full any interest payment or installment of principal required under this Agreement or any other agreements related to the Loan when the same shall become payable by it;

(b) the Borrower or the Beneficiary shall fail to comply with any other provision contained herein applicable to it;

(c) any representation or warranty made by or on behalf of the Borrower or the Beneficiary with respect to obtaining the Loan provided for herein or made or required to be made hereunder is incorrect in any material respect;

(d) any indebtedness or obligation of the Beneficiary for the payment of borrowed money shall have become due and payable and not been paid;

(e) all or any substantial part of the Beneficiary's assets, business or operations (whether now or hereafter existing) shall be condemned, seized or appropriated,

or any action by any governmental authority shall be instituted to dissolve or disestablish the Beneficiary or to suspend its operations, or a substantial part thereof;

(f) any franchise, license, right, privilege, or charter, granted pursuant to or existing by virtue of law or other legal authority and necessary for the conduct of the Beneficiary's business, for the completion of the Project, or for carrying out of the terms of this Loan Agreement is revoked, cancelled, or denied in such manner as to make it improbable that the Beneficiary will be able to perform its obligations under this Loan Agreement or that the Loan provided for herein will substantially fulfill the purposes for which it has been established;

(g) the Beneficiary shall voluntarily enter into or be subjected involuntarily to any procedure under the laws in effect within the Republic of Indonesia for the relief of a financially distressed debtor which is substantially equivalent to a petition in bankruptcy or the appointment of a receiver for the benefit of creditors; or

(h) a material default shall have occurred after the date hereof, and not been remedied after notice, under any

other loan agreement between the Borrower and AID; then A.I.D., at its option, may declare all or any part of the unrepaid principal under the Loan provided for herein or, if the Beneficiary is in default, any part of the unrepaid principal under the loan from the Borrower to the Beneficiary pursuant to Section 9.1 hereof, to be due and payable immediately, and upon any such declaration, unless the default may be cured and is cured within sixty (60) days thereafter, such principal and all interest accrued thereon shall become immediately due and payable.

The Borrower, if the Beneficiary is in default, at its option, may declare all or any part of the unrepaid principal under the loan from the Borrower to the Beneficiary pursuant to Section 9.1 hereof to be due and payable immediately, and upon any such declaration, unless the default may be cured and is cured within sixty (60) days thereafter, such principal and all interest accrued thereon shall become due and payable immediately. The Borrower shall not exercise the right set forth in the preceding sentence hereunder without the prior written concurrence of A.I.D.

SECTION 8.2. Termination of Disbursements; Transfer of Goods to A.I.D. In the event that at any time:

(a) an Event of Default has occurred and has not been remedied as provided above;

(b) an event occurs that A.I.D. determines to be an extraordinary situation which makes it improbable that the purposes of the Loan provided for herein will be attained or that the Borrower or the Beneficiary will be able to or will perform its obligations hereunder; or

(c) any disbursement would be in violation of the legislation governing A.I.D.;

then A.I.D. at its option, after notice to the Borrower and the Beneficiary, may (i) decline to issue further letters of commitment or other commitment documents, (ii) suspend or cancel outstanding letters of commitment or other commitment documents to the extent that they have not been utilized through the issuance of irrevocable letters of credit or through bank payments made other than under irrevocable letters of credit, giving notice to the Borrower and the Beneficiary thereof, (iii) decline to make disbursements other than under letters of commitment; and (iv) at A.I.D.'s expense, direct that title to goods financed under disbursements hereunder shall be transferred to A.I.D. at cost to the Beneficiary, provided the goods are from a source outside the Republic of Indonesia, are in a deliverable state and have not been off-loaded in ports of entry of the Republic of Indonesia. To the extent that any costs connected with the purchase and transportation of these goods have been financed hereunder, these amounts shall be deducted from Principal.

SECTION 8.3. Refunds. If A.I.D. determines that any disbursement is not supported by valid documentation in accordance with the terms of this Loan Agreement, or is not made or used in accordance with the terms of this Loan Agreement, or was at the time of disbursement in violation of the legislation governing A.I.D., A.I.D., at its option, may, notwithstanding the availability of any other remedy provided for under this Loan Agreement or the exercise of the remedy provided for in Section 8.1, require the Borrower to pay to A.I.D. in United States dollars within thirty (30) days after receipt of a request therefor, an amount not to exceed the amount of such disbursement, and the Beneficiary, if it is responsible for the improper documentation or use of the disbursement, shall pay the Borrower in Indonesian currency the equivalent, as computed in accordance with Section 9.2 hereunder, of the amount to be paid to A.I.D. under this Section; provided that such request by A.I.D. shall be made not later than five (5) years after the date of the final disbursement hereunder. Any such refund received by A.I.D. shall be applied first to any accrued interest, and then to installments of Principal in inverse order of their maturity.

SECTION 8.4. Waivers. No delay in exercising or omission to exercise any right, power or remedy accruing to A.I.D. under this Loan Agreement shall be construed as a waiver of any such right, power or remedy.

SECTION 8.3. Refunds. If A.I.D. determines that any disbursement is not supported by valid documentation in accordance with the terms of this Loan Agreement, or is not made or used in accordance with the terms of this Loan Agreement, or was at the time of disbursement in violation of the legislation governing A.I.D., A.I.D., at its option, may, notwithstanding the availability of any other remedy provided for under this Loan Agreement or the exercise of the remedy provided for in Section 8.1, require the Borrower to pay to A.I.D. in United States dollars within thirty (30) days after receipt of a request therefor, an amount not to exceed the amount of such disbursement, and the Beneficiary, if it is responsible for the improper documentation or use of the disbursement, shall pay the Borrower in Indonesian currency the equivalent, as computed in accordance with Section 9.2 hereunder, of the amount to be paid to A.I.D. under this Section; provided that such request by A.I.D. shall be made not later than five (5) years after the date of the final disbursement hereunder. Any such refund received by A.I.D. shall be applied first to any accrued interest, and then to installments of Principal in inverse order of their maturity.

SECTION 8.4. Waivers. No delay in exercising or omission to exercise any right, power or remedy accruing to A.I.D. under this Loan Agreement shall be construed as a waiver of any such right, power or remedy.

on any date on which Beneficiary's interest payments are due and payable. Any such payment will be applied first to payment of any accrued interest and then to the remaining installments of principal in the inverse order of maturity.

(b) A "maintenance of value" section, in the form of Section 9.2 below, will be included.

(c) All repayments made by Beneficiary to Borrower shall be used for the development budget of the Borrower or for such other economic development purposes as A.I.D. may agree.

SECTION 9.2. Rate of Exchange. With respect to principal repayments and interest payments made to the Borrower by the Beneficiary pursuant to Section 9.1 of this Loan Agreement:

(a) The amount of Indonesian currency equivalent to the United States dollar amount for which payment is due shall be computed on the basis of the rate of exchange prescribed in subsection (c) of this Section applicable to such payment; provided that in any case where payment is made after the due date for that payment A.I.D. may require that it be computed on the basis of the prescribed rate of exchange existing on the date of payment.

(b) In the event there is no prescribed rate of exchange on the due date for a payment, the amount of Indonesian currency equivalent to the United States dollar amount of the obligation for which payment is due shall be computed and paid on the basis of the prescribed rate of exchange existing on the date nearest preceding the due date for the payment on which such a rate can be ascertained. Within sixty (60) days after the first date after such due date on which a current prescribed rate of exchange can be ascertained, the Beneficiary shall, upon the request of A.I.D., make prompt payment to the Borrower, or the Borrower, upon the request of A.I.D., shall make prompt reimbursement to the Beneficiary of the amount of Indonesian currency required to make the total payment of Indonesian currency equivalent in value to the United States dollar amount of the obligation against which the payment was made, computed on the basis of the prescribed rate of exchange existing on the first date following such due date on which such a rate can be ascertained.

(c) For purposes of this Section, the prescribed rate of exchange between Indonesian currency and United States dollars on any particular date shall be the effective

rate of exchange at which United States dollars are sold or offered for sale on that date in exchange for Indonesian currency to residents of the Republic of Indonesia, exclusive of Government entities, for effecting: (1) the payment of interest and repayment of principal on loans; (2) the transfer of dividends and other forms of earnings on capital investments in the Republic of Indonesia; and (3) the transfer of investment capital; provided that there is only one such rate in the Republic of Indonesia for such transactions; provided that A.I.D. and the Republic of Indonesia may agree in writing on a rate of exchange applicable to this agreement. If there is no written agreement between A.I.D. and the Republic of Indonesia on the rate of exchange applicable to this agreement, and if there is no such single rate of exchange applicable to all of the three categories of transactions referred to in the preceding sentence the applicable rate of exchange on any particular date shall be the highest (i.e., the largest number of units of Indonesian currency per United States dollar) effective rate of exchange at which United States dollars are sold or offered for sale on that date

to residents of the Republic of Indonesia, exclusive of Government entities, to effect transactions within any of the three categories referred to in the preceding sentence.

ARTICLE X.

Miscellaneous

SECTION 10.1 Designation of Representatives.

(a) All actions required or permitted to be performed or taken under this Loan Agreement by the Borrower, the Beneficiary or A.I.D. may be performed by their respective duly authorized representatives.

(b) The Borrower hereby designates Prof. Widjojo Nitisastro, State Minister for National Development and Planning, Chairman of the National Planning Board ("Bappenas") and the Beneficiary hereby designates Ir. Abdul Kadir, First Director, Perusahaan Listrik Negara (PLN) as their respective representatives with authority to designate in writing other representatives in their dealings with A.I.D. The representatives designated in or pursuant to the preceding sentence, unless A.I.D. is given notice otherwise, shall have authority to agree, on behalf of the Borrower and the Beneficiary respectively,

to any modification of this Loan Agreement which does not substantially increase their obligations hereunder. Until receipt by A.I.D. of written notice of revocation of the authority of any such representative, A.I.D. may accept the signature of such representative on any instrument as conclusive evidence that any action effected by such instrument is authorized by the party on whose behalf such representative purports to act.

SECTION 10.2. Implementation Letters. A.I.D. shall from time to time issue Implementation Letters that will prescribe the procedures applicable hereunder in connection with the implementation of this Loan Agreement.

SECTION 10.3. Communications. Any communication or document given, made or sent by the Borrower, the Beneficiary or A.I.D. pursuant to this Loan Agreement shall be in writing and shall be deemed to have been duly given, made or sent to the party to which it is addressed when it shall be delivered by hand or by mail, telegram, cable or radiogram to such party at its following address:

To the Borrower:

Mail Address:

Departemen Luar Negeri
Djalan Singamangaradja 2
Djakarta, Indonesia

Cable Address:

Deplu Djakarta

To the Beneficiary:

Mail Address:

Perusahaan Listrik Negara (PLN)
Djl. Trunodjojo Blok MI/135
Kebajoran Baru, Djakarta

Cable Address:

PLN PST, Djakarta

To A.I.D.:

Mail Address:

United States Agency for International Development
American Embassy
Djakarta, Indonesia

USAID AMEMB DJAKARTA

Other addresses may be substituted for the above upon giving of notice as provided herein.

All communications and documents submitted to A.I.D. hereunder shall be in English, and all technical and engineering specifications therein shall be in English and in terms of United States standards except as A.I.D. may other wise agree in writing.

Executed at Djakarta, Indonesia, on the date first above written.

UNITED STATES OF AMERICA

/S/

By: Francis J. Galbraith

Title: Ambassador

THE REPUBLIC OF INDONESIA

/S/

By: Oemar Senoadji

Title: Minister for Foreign Affairs ad-interim

PERUSAHAAN LISTRIK NEGARA

/S/

By: Abdul Kadir

Title: First Director

ANNEX "A"

As used in this Agreement the "Project" shall mean the construction of a 100 megawatt (MW) steam power station at Semarang Central Java Province, Republic of Indonesia, consisting of two 50 MW generating units and related facilities. Major components of the power plant are boilers, turbine generators, condensing equipment, feed water heaters, boiler feed pumps, cooling water systems, and electrical equipment (including but not limited to 150 Kv. stepup transformers and high voltage switchyard). Provision will be made in construction of the steam station for future installation of 4 additional 50 MW generating units (which will not be financed by the proceeds of this Loan). The Project includes plant related engineering and construction services and also provides for technical assistance to the Beneficiary related to the operation and maintenance of the plant.

4970204 (11)
PD-AAD-777

79p.

REPUBLIC OF INDONESIA
SEMARANG POWER PLANT

TECHNICAL PROPOSAL
JANUARY 1972

GIBBS & HILL, Inc.
Engineers, Designers, Constructors
New York

Gibbs & Hill, Inc.
ENGINEERS DESIGNERS CONSTRUCTORS

January 21, 1972

Ir. Abdul Kadir, President-Director
Perusahaan Listrik Negara (PLN)
Djl. Trunodjojo Block M-1 No. 135
Kebajoran Baru
Djarkarta, Indonesia

Gentlemen:

In accordance with your letter of November 30, 1971, we are pleased to submit our Technical Proposal for providing engineering services in connection with the design, construction and initial operation of the Semarang Steam Power Plant. Our Technical Proposal covers the entire work contained in the scope of work document dated October 27, 1971, attached to your above referenced letter. Please consider our "Qualification Statement", submitted July 21, 1971, as a part of this Technical Proposal as we have avoided duplicating much of the information contained therein.

For this important assignment, the Gibbs & Hill Organization will utilize the combined talents of our subsidiary, Gibbs, Hill, Durham & Richardson, Omaha, Nebraska, as well as our Headquarters staff in New York. Project management, engineering, and design would be performed in Omaha. Conceptual engineering, quality assurance, purchasing, expediting, construction management, planning, training and other services would be performed by New York. The resumes in Section 5 reflect the care we have exercised in selecting experienced personnel from both offices who will perform as a cohesive team in the execution of your project.

This integrated approach by Gibbs & Hill and its subsidiary has been successful on several projects including the two recently completed AID sponsored 66 MW oil-fired units in Saigon for the Viet Nam Power Company and the 470 MW Fort Calhoun nuclear plant for Omaha Public Power District, Nebraska, presently under construction.

We enclose as a separate document a brochure describing our Omaha subsidiary.

We believe that our Organization is particularly well qualified to perform the engineering services on this important project because of our

393 SEVENTH AVENUE NEW YORK, N.Y. 10001 PHONE: 212-565-4300 CABLE: GIBBSHILL, NEW YORK

many years of world-wide experience in the engineering, design and construction of steam-electric generating stations. In addition, we have participated in a number of studies in Indonesia since 1960, and have personnel on our staff who are acquainted with geographic, climatic, topographic, water supply and other factors that will play an important part in the design, development and completion of the Semarang Steam Power Plant.

We sincerely appreciate the confidence you have placed in our firm in selecting us as one of those to be given final consideration for these engineering services. We thank you for this opportunity of submitting our Technical Proposal and look forward to further discussions on the Semarang Steam Power Plant project.

Very truly yours,

GIBBS & HILL, Inc.

A. Matiuk

A. Matiuk
Senior Vice President

AM:ei
Enclosure

cc: USAID/Engineering
Embassy of the USA
Attention: Mr. John Glaws
APO San Francisco 96356

Gibbs & Hill, Inc.
ENGINEERS DESIGNERS CONSTRUCTORS

January 24, 1972

Department of State
Agency for International Development
Bureau for East Asia
Office of Engineering
Washington, D. C. 20523

Attention: Mr. Earl F. Clark
Room 3320A

Gentlemen:

Our Proposal for Semarang was sent air mail on January 22nd in accordance with instructions. In addition to the copies on the distribution list, we are enclosing one copy with this letter for your files.

We appreciate the reference material which you sent to us. These documents will be held in our files until you need them.

Many thanks for your assistance.

Sincerely,

A. C. Holland

A. C. Holland
Planning & Development Engineer

ACH:pmb
Enclosure

RECEIVED
JAN 26 3 52 PM '72
ENGINEERING OFFICE

393 SEVENTH AVENUE NEW YORK, N. Y. 10001 PHONE: 212-565-4300 CABLE: GIBBSHILL, NEW YORK

CONTENTS

1. General Information

2. Project Organization

3. Engineering Services Manpower Estimate

4. Logistic Support

5. Personnel Resumes

Section 1

GENERAL INFORMATION

A. INTRODUCTION

This Technical Proposal has been prepared after careful review of Perusahaan Listrik Negara (PLN) document, dated October 27, 1971, "Scope of Work and Related Provisions for Engineering Services Semarang Steam Power Plant" and is intended to fully reflect the entire scope of services outlined in the aforementioned document.

Gibbs & Hill has performed similar services for other AID-sponsored projects in many parts of the world. Our most recent power plant project is in Saigon for the Viet Nam Power Company and is in the final stages of construction. The two 66 MW oil fired units, an addition to the Thu Duc Power Station scheduled to go into operation this year, were designed in our Omaha office. Gibbs & Hill also furnished the engineering services for the first unit in the same plant which was completed in 1966.

In 1968 Gibbs & Hill was involved in the original Semarang Project in which a survey and study of the expansion needs to the electric power system in the Central Java area was performed.

Gibbs & Hill has also furnished construction supervision, operator training and startup services for a number of steam generating stations throughout the world. At the present time Gibbs & Hill is providing complete operator training, startup and initial operation services for two 162.4 oil fired steam-electric generating units in Korea.

We have had extensive experience in designing plants for tropical and subtropical areas. For plants we have engineered in remote and developing areas we emphasize in our design certain features

which recognize the unavailability of experienced operators. We have continually recognized the importance of designing plants to maximize the use of indigenous materials and local labor.

We would plan to conduct our engineering services as generally outlined in the PLN scope of work and will develop a detailed work plan during the preparation of the project design report. We would plan to use many of the key personnel who have worked on the above projects for the design, engineering, construction supervision, training and startup services on the PLN project as noted on the project organizational information included in Section 2.

B. ENGINEERING DESIGN APPROACH

The Gibbs & Hill approach to the engineering of this project will be to provide PLN with a reliable, long-life, easy to operate and economical to maintain, generating facility. To this end, we will exercise conservatism in our engineering decisions and at the same time, take advantage of methods for reducing costs wherever they are supported by proven experience. The ability to easily extend the facilities for meeting future power demands will be a major consideration.

We will design a plant layout that under normal load and during load changes will minimize the operators' activities. We will provide automatic controls recognizing their value in operation but not over complicating the plant. We will fully consider the needs of the operator and for maintenance requirements. We will provide good access to all areas of the plant and furnish good platform layouts for complete access to all operating and maintenance areas.

Based on our previous studies for similar generating facilities in the same geographical area of Indonesia, we would keep in mind the following general concepts in developing the detailed design for this project:

1. Foundations - Thorough subsurface and seismic investigations would be made in the selection of the foundation system. Precast concrete piles would be considered where conditions dictate the use of piles.

2. Power Plant Structures - We would consider the maximum use of reinforced concrete in order to save on imported structural steel. Walls and roofs would be of precast concrete panels or other locally fabricated materials. Maximum use would be made of indigenous materials throughout.

3. Steam Cycle Equipment and Systems - Our preliminary engineering approach is that the major equipment would have the following basic characteristics:

   a. Turbine-Generator - 1250 psi, 950 F, steam turbine and hydrogen cooled generator, 13.8 KV, 50 HZ

   b. Boilers - Two drum self-supporting, outdoor, oil fired, pressurized furnace with rain protection over the boiler and firing aisle.

   c. Condensers - Single pass, divided waterbox, 2.5" Hg backpressure, 86 F cooling water, tube material subject to investigation

   d. Feedwater Heaters - Four horizontal closed "U" tube type heaters and one deaerator with a gravity drain cascading system under all load conditions thereby eliminating heater drain pumps

e. Boiler Feed Pumps - Two full capacity motor driven pumps for each unit

f. Circulating Water Pumps - Two motor driven half capacity pumps for each unit

g. Condensate Pumps - Two full capacity motor driven pumps for each unit

h. Combustion Controls - Pneumatic, with oil free air supply system with emergency back-up

i. Makeup Water System - Design will depend on available water analysis

j. Fuel Storage - Forty-five days of operation in three bulk storage tanks

k. Auxiliary Power - 2400 and 380 volt 3 phase supplies

l. Ventilation - We would provide supply and exhaust fans to control ventilation of enclosed areas. Air filters would be considered where dusty atmosphere might be encountered

m. Environmental Protection - Careful consideration will be give to the project's effect on the environment, particularly air and water quality

Section 2

PROJECT ORGANIZATION

A. INTRODUCTION

Gibbs & Hill will utilize a total project management team concept for the engineering, design, procurement, construction supervision, operator training and initial startup for the Semarang Steam Power Plant. Gibbs & Hill has had considerable success in this total management concept on many fossil fuel and nuclear projects, both in the United States and throughout the world. This experience has developed a special Gibbs & Hill capability for managing projects under widely varying conditions. We pride ourselves on our integrity, specialized knowledge, years of experience and management responsibility which assures our clients of a job professionally done.

We have included organizational charts to show the overall project organization. Figure 1 shows the project management control and responsibility to PLN. Figure 2 shows the proposed project organization with the major functions to be fulfilled and names of key technical personnel who would be assigned to do the work. They will be supplemented by additional engineers, designers, draftsmen, purchasers, inspectors, etc., as required to perform the engineering services and maintain the project schedule. Resumes of key personnel are included in Section 5.

B. DESCRIPTION OF PROJECT ORGANIZATION

1. Project Management

The project will be directed by the Project Manager who will have sole responsibility to PLN for the satisfactory comple-

tion of the project on schedule and within the budget. Although he will have sole responsibility for the entire project, he may obtain advice and guidance from Company management, department heads and other specialists as required.

The Project Manager will maintain close supervision of all aspects of the project from the conceptual design and planning stages through selection and procurement of major equipment, the coordination and production of design, scheduling, procurement, expediting, shipping, construction, operator training, and finally startup, testing and operation of the completed facility. He will see that the staff is sufficient at all times to perform the engineering services efficiently, on schedule, and with full consideration to quality control and compliance with the project requirements.

The Project Manager will participate in all policy decisions and major technical decisions affecting the project. He will approve all recommendations before they are forwarded to PLN, including preliminary studies, reports, specifications, and drawings.

2. Engineering and Design

Each engineering and design group will report through a job engineer directly to the Project Manager. The Job Engineer from each technical descipline will direct engineers and designers who will perform all engineering and design work for the project. The Job Engineers will receive technical guidance from Supervising Engineers and technical assistance from in-house consultants as required.

3. Procurement

The procurement functions will be under the direct charge of the Purchasing Manager reporting to the Project Manager. Gibbs

& Hill has established procurement policies and procedures for placing, expediting, inspecting and delivery of material and equipment requirements which have been developed and have proved successful on many overseas projects. The procurement services will include purchasing, expediting, shop inspection and traffic control.

4. Estimating

The estimating function will be under the overall control of the Project Manager. Estimates will be prepared during the course of the project from initial comparative estimates for site evaluation purposes, through preliminary project estimates and detailed estimates for major equipment purchases, to the final project cost estimate. These estimates will be used for the control of costs and will be periodically updated during the engineering and construction phases of the project.

5. Planning and Scheduling

The planning and scheduling function will be under the overall control of the Project Manager, assisted by our Planning and Scheduling Department.

During the initial phase of the project, a time scale master control network will be developed to graphically display the overall planned sequence of activities from start of engineering to the project's completion. It will include critical milestones to be met in engineering, procurement and construction to ensure that equipment and material arrives on site as needed to suit the construction program. Following preparation and development of the master control network computer assistance in processing the data into meaningful reports will be employed. As a result of the network analysis, a revised network will be prepared to minimize the number of restraints and restrictions imposed on the overall program. Initially, studies and evaluation will be made to produce a project network which will ensure an economic

and controlled progression through engineering and construction but at the same time permitting maximum possible flexibility.

The construction contract will include provisions for the Contractor to produce sub networks of his activities to support the master network. The Contractor will be assisted by the Gibbs & Hill Planning Engineer in establishing the format for the sub network. As the construction work progresses the Contractor will develop, under Gibbs & Hill supervision and approval, detailed sub networks to allow for closer scrutiny of critical or potentially critical situations.

The master control network and supporting sub networks will be updated regularly so that overall control of the project will be maintained by direct use of revised networks and supporting report documents. Visual aids, such as barcharts, will be generated by computer or developed manually from the resulting analysis of revised and current status of the various activities in the network. These barcharts will have the added feature of having embodied the restraints and interrelationships existing within the logic of the network. These documents will highlight areas of concern in sufficient time for corrective action to be taken. Vendor's performance, redesign, construction problems, adverse weather or any other possible combination of setbacks will be analyzed and dealt with expeditiously so that possible effects on the overall project schedule can be minimized.

The Project Manager and the Resident Construction Engineer will use the master network to direct the engineering, procurement and construction activities to assure timely completion of the various phases of work in an orderly manner so that the overall project completion schedule will be realized.

6. Training and Operations

A comprehensive operator training program will be developed and implemented for the training of key operating personnel in startup, testing, operation and maintenance of the power plant and will be under the direction of our Manager of Plant Test and Operations. Experienced operating supervisors will instruct Owner's personnel in all aspects of the plant operation and conduct tests to demonstrate the overall plant performance for compliance with established project design criteria.

7. Quality Assurance Program

Gibbs & Hill recognizes the quality control of engineering, design, procurement, construction, training and operation activities for steam-electric generating plants is necessary in order to provide assurance to the client that it will have a highly reliable plant with an acceptable level of maintenance and operating costs. It should be noted that the Quality Assurance Program is carried out independently of the engineering and design group.

Following established practice, the quality assurance of engineering and design work will commence at the start of the project with a continuous review by our senior engineers and specialized consultants to ensure that the design of the plant is in accordance with good engineering practice. To the maximum extent possible, equipment will be specified and selected that has demonstrated a record of satisfactory operation in the electric utility industry. Personnel experienced in operation will assist in these reviews and bring to bear their first-hand experience to ensure a safe and reliable operating plant. Our staff construction people will be consulted in any areas where peculiar construction problems might arise.

In our design and drafting room activities, long established procedures for checking will be followed. The checking routines will be applied to designs developed by Gibbs & Hill and a[illegible] to Vendors' equipment drawings.

8. Construction Supervision and Inspection

The Gibbs & Hill Construction Manager will have the responsibility for staffing, administration and direction of the resident engineering supervision and inspection group. At the site, direction of all activities will be the responsibility of the Resident Construction Engineer. He will be responsible for the coordination of the work at the site and will assure the orderly development of project construction. He will maintain close liaison with the Project Manager in matters pertaining to interpretation of specifications and design drawings issued for the construction of the project.

The field organization will be staffed with qualified personnel who will perform the functions required for engineering supervision and inspection of the construction work as outlined in subsection II-E, "Engineering Supervision and Inspection", of PLN document "Scope of Work and Related Provisions for Engineering Services Semarange Steam Power Plant". Particular attention will be paid to PLN requests and our professional appraisal of local conditions.

PROJECT MANAGEMENT CHART
PERUSAHAAN LISTRIK NEGARA
SEMARANG STEAM POWER PLANT

Gibbs & Hill, Inc.
ENGINEERS, DESIGNERS, CONSTRUCTORS
NEW YORK

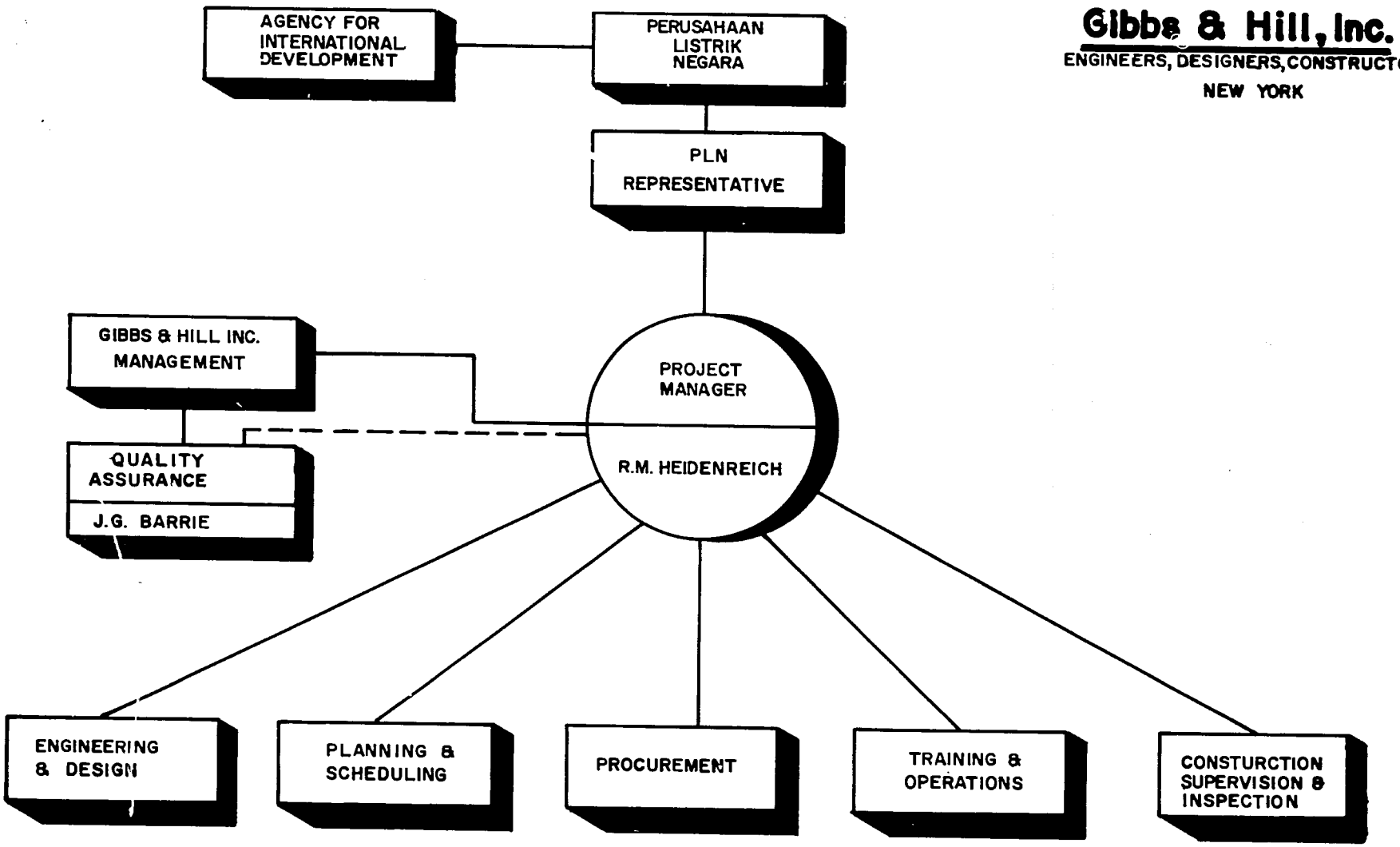

FIGURE I

PROJECT ORGANIZATION CHART
PERUSAHAAN LISTRIK NEGARA
SEMARANG STEAM POWER PLANT

Gibbs & Hill, Inc.
ENGINEERS, DESIGNERS, CONSTRUCTORS
NEW YORK

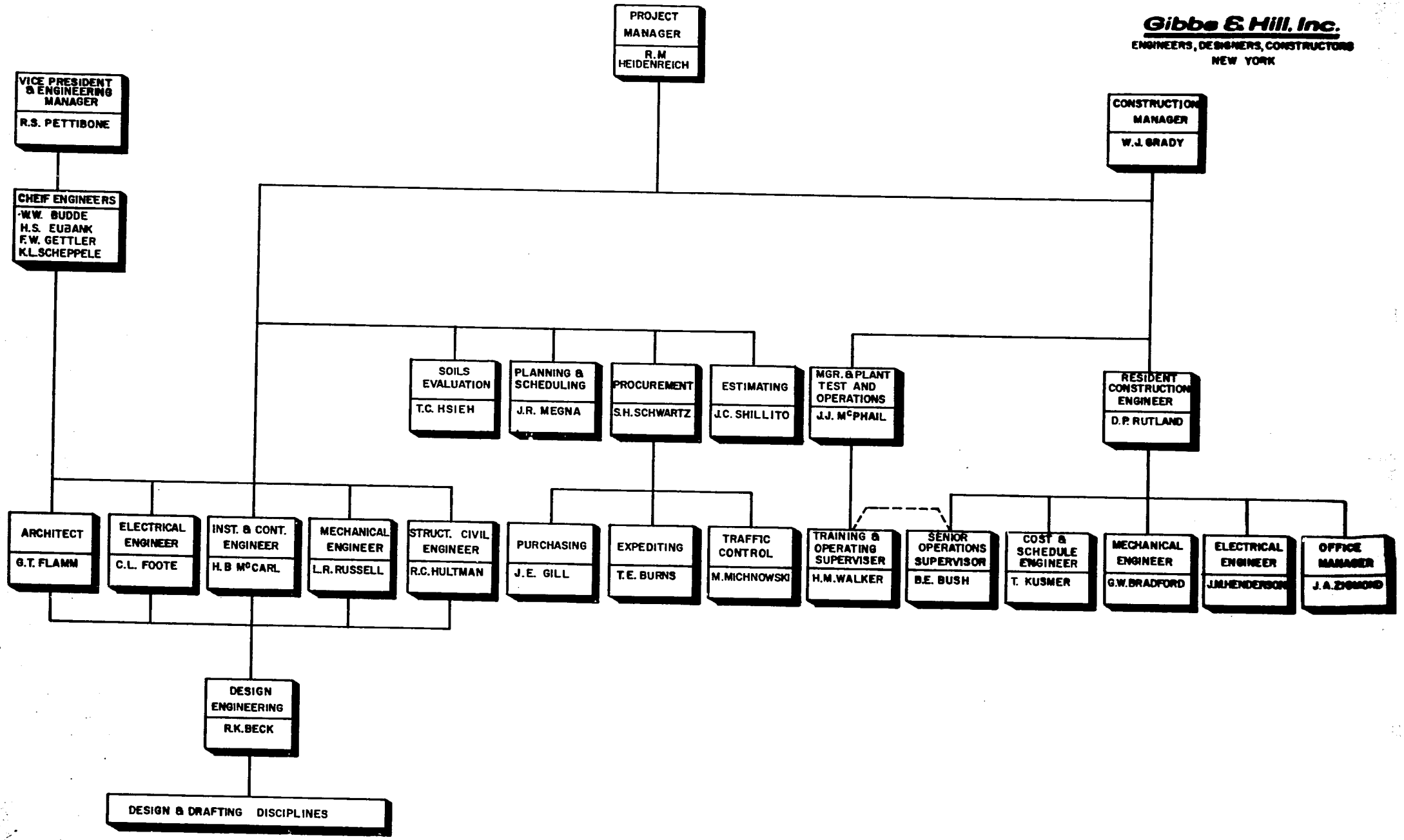

FIGURE 2

Section 3

ENGINEERING SERVICES MANPOWER ESTIMATE

A. GENERAL

Gibbs & Hill has carefully reviewed and evaluated the engineering services defined in the "Scope of Work and Related Provisions" attached to the PLN letter of November 30, requesting our detailed Technical Proposal. We have made an estimate of the Gibbs & Hill man-months required to perform all of the engineering services enumerated under Section II, "Scope of Services by the Engineer", of the above subject document, including time to prepare necessary documentation and perform services to support PLN commitments to AID.

B. ESTIMATED MAN-MONTHS FOR ENGINEERING SERVICES

Gibbs & Hill has prepared their estimates for performing the engineering services described under the major subheadings of Section II, "Scope of Services by the Engineer" of the PLN document. We have tabulated the estimated man-months for Gibbs & Hill services to be performed in Indonesia and in the United States as follows:

		Estimated Man-Months	
		Indonesia	United States
A.	General	(Included in B)	
B.	Engineering and Design	10	485
C.	Procurement	-	89
D.	Construction	2	36
E.	Engineering Supervision and Inspection of Construction	138	25
F.	Plant Startup and Operation	10	24
G.	Training	30	21
H.	Operational Personnel	65	2
	Total Estimated Man-Months 684	255	682
	B & V →	341	47
		Σ = 937	

471
348
819

Section 4

LOGISTIC SUPPORT

A. GENERAL

We have reviewed subsection V-C, "Logistic Support", of the PLN document, "Scope of Work and Related Provisions for Engineering Services". Although PLN has requested this Technical Proposal include a specific listing of our requirements for logistic support (including time, cost, etc.) in the form of an actual Contract provision, we find it difficult to estimate the Indonesian costs for this support without additional information. We suggest that this contractual provision be developed at the same time a Contract is negotiated for all of the Engineering Services. We are including a list of logistic support items required and the estimated time our personnel will be assigned to Indonesia. From this information we believe PLN can estimate the cost for logistic support.

B. SUPPORT ITEMS

PLN shall provide the following items of logistic support for all of our construction supervisory, training, startup and operating personnel who would be assigned to the project for periods exceeding six months.

1. Field office at the project site including office furniture, equipment and supplies, telephone service and all utilities.

2. Sufficient secretarial, translation and clerical personnel to handle all correspondence, reports, filing and routine clerical functions.

3. Fully furnished and air conditioned dwellings for all of our field personnel who are accompanied by their families and similar bachelor accommodations for our single personnel.

4. Suitable automobile transportation with drivers for our site personnel to transport them from their living accommodations to and from the site and from their living accommodations to Semarang. "personal"

5. First class rail and air transportation in Indonesia.

6. Local hospital facilities and medical services.

7. Subsistance allowance.

C. TENURE OF FIELD PERSONNEL

We estimate that the Gibbs & Hill construction supervisory, training, startup and operating personnel will be resident in Indonesia for the following number of months:

Position	Months
Resident Construction Engineer	30
Mechanical Engineer	24
Electrical Engineer	24
Cost and Schedule Engineer	30
Office Manager	30
Supervisor Training and Operations	25
Startup and Operations Coordinator	25
Results Supervisor and Operating Engineer	25
Two Operating Engineers	15 each
	15
	243

Section 5

PERSONNEL RESUMES

This section includes resumes of key personnel who would participate either directly or indirectly in the engineering services for the various phases of the project. This staff would be supplemented by additional technical personnel as the project progresses in accordance with the project needs and would be supported by additional senior technical personnel and specialists as shown under Section 4 of Gibbs & Hill's Qualification Statement of July, 1971.

A. PROJECT ORGANIZATION

The following would be the key personnel assigned to perform the engineering services for the Semarang Steam Power Plant Project.

Name	Title
Robert M. Heidenreich	Project Manager
Cyrus L. Foote	Supervising Electrical Engineer
Laurie L. Russell	Supervising Mechanical Engineer
George T. Flamm	Supervising Architect Engineer
Raymond C. Hultman	Structural Engineer
Harry B. McCarl	Instrument and Control Engineer
Richard K. Beck	Design Engineer - Mechanical
Tai C. Hsieh	Structural Engineer
Joseph R. Megna	Supervising Planning and Scheduling Engineer
Sherwood H. Schwartz	Purchasing Manager
James C. Shillito	Chief Estimating Engineer
John J. McPhail	Manager - Plant Test and Operations
Michael Michnowski	Traffic Coordinator
John E. Gill	Purchaser
Thomas E. Burns	Expediter
Herbert M. Walker	Superintendent of Training and Operations
Byron E. Bush, Sr.	Plant Operations Supervisor
Donald P. Rutland	General Construction Superintendent
Guy W. Bradford, Jr.	Mechanical Engineer
John M. Henderson, Jr.	Electrical Engineer
Theodore Kusmer	Construction Cost Engineer
John A. Zigmond	Office Manager

ROBERT M. HEIDENREICH, P.E.

Vice President & General Manager
Gibbs, Hill, Durham & Richardson

Education	- Bachelor of Science in Civil Engineering, University of California.
Registration	- Professional Engineer--Arizona, California, Indiana, Iowa, Nebraska, Nevada, New York and Ohio.
1965 to Present	- Gibbs, Hill, Durham & Richardson, Inc., Omaha, Vice President and General Manager. In charge of all company operations.
1962 to 1965	- Gibbs and Hill, Inc., New York. Assistant Vice President. In charge of all foreign and domestic construction activities of the company.
1958 to 1961	- Gibbs and Hill, Inc. Supervising Project Engineer and Construction Manager. In general charge of power generation projects for Indianapolis Power and Light Company, Toledo Edison Company, Taiwan Power Company and Atlantic City Electric Company, and sanitary engineering projects of the company. In charge of construction activities of the company.
1955 to 1957	- Gibbs and Hill, Inc., Los Angeles, California. Project Engineer. In charge of El Centro Steam Station, Unit No. 3, Imperial Irrigation District.
1953 to 1955	- AEC Engineering and Construction Company. Los Angeles, California, General Manager. Mechanical engineering contractor specializing in power and industrial projects.
1952 to 1953	- Gibbs and Hill, Inc., Los Angeles, California. Project Engineer. Design of offsite facilities for ammonia plant for Shell Chemical Corporation, Ventura, California.
1946 to 1952	- Ofoco Construction Company, Inc., Long Beach, California. Vice President and Chief Engineer. Supervision and coordination of design, estimating and engineering of steam electric generating plants, compressor plants, process piping, fire protection, refinery installations and similar mechanical work.
1943 to 1946	- Civil Engineer Corps, U.S. Naval Reserve. Ensign to Lieutenant. Construction of roads, airports and buildings, in the Solomon and Philippine Islands, 93rd U.S. N.C.B.
1941 to 1943	- TideWater Associated Oil Company, Wilmington, California. Office Engineer. Design, estimating, preparation of specifications and contracts and coordinating field work for pipelines, pumping stations and boiler plant facilities.

CYRUS L. FOOTE, P.E.

Supervising Electrical Engineer
Gibbs, Hill, Durham & Richardson

Education	-	Bachelor of Science in Electrical Engineering, Notre Dame University.
1966 to Present	-	Gibbs, Hill, Durham & Richardson, Inc., Omaha, Nebraska. Supervising Electrical Engineer. In charge of electrical engineering and design of steam electric generating stations, substations and transmission facilities, including 457,000kw Nuclear Unit No. 1, Fort Calhoun Station, Omaha Public Power District and two 66,000kw units, Thu Duc Power Station, Saigon, South Vietnam.
1960 to 1966	-	Gibbs & Hill, Inc., New York, New York. Supervising Electrical Engineer. In charge of electrical engineering and design for hydro-electric projects, including Colima River Project for Corporacion Autonoma Regional del Cauca, Cali, Columbia; Four 30,000kw generators and four turbines rated at 55,000 hp at 676 foot head. In charge of electrical engineering and design: 745,000 lb/hr boiler Nuevo Puerto Station, Compania Ipalo-Argentina de Electrcidad, Buenos Aires, Combustion Engineering Company; 289,000kw Unit No. 4 Escombreras Station, Cartenga, Spain, Hidroelectricia Espanolasa, International General Electric Company.
1949 to 1959	-	Gibbs & Hill, Inc., Los Angeles, California. Supervising Electrical Engineer, in charge of electrical engineering and design for the following 44,000kw, Unit No. 3 and 33,000kw, Unit No. 2, at El Central Steam Plant, 33,000kw Pilot Knob Hydro-electric plant and 9,600kw Drop No. 2, hydro-electric plant for Imperial Irrigation District, Imperial, California; 138kv transmission line and substations for reactor testing station of Atomic Energy Commission, Arco, Idaho; transmission lines and electrical facilities for U.S. Navy, Camp Pendleton, Oceanside, California; dry ice and liquid seal tube tank for Cardox Corporation, Ventura, California; monorail feasibility study for Los Angeles Metropolitan Transit Authority; technical and economic aspects of feasibility study for electrification portion of proposed rapid transit system for San Francisco; off-side facilities of ammonia plant for Shell Chemical Corporation, Ventura, California.
1945 to 1949	-	Gibbs & Hill, Inc., New York, New York. Assistant Electrical Engineer, engineering study, design and preparation of specifications for installation of 100,000kw steam-turbine generator unit at Gennevilliers Power Station of Union d'Electricite, Paris, France; 20,000kw steam turbine-generator Unit No. 1 at El Central Steam Plant of Imperial Irrigation District, Imperial, California; three 6,000kw steam turbine-generators at Sidon Refinery Plant Mediterranean Refining Company at Sidon, Lebanon; preliminary design studies for installation of electrical equipment at Nangal I and Nangal II Hydro Plants of Nangal Power Project for Government of East Punjab, India.

LAURIE R. RUSSELL, P.E.

Supervising Mechanical Engineer
Gibbs, Hill, Durham & Richardson

Education	-	Bachelor of Science in Mechanical Engineering, University of Kansas.
Registration	-	Professional Engineer--Missouri, Kansas, Nebraska, Iowa.
1968 to Present	-	Gibbs, Hill, Durham & Richardson, Inc., Omaha, Nebraska. Supervising Mechanical Engineer. Design responsibilities for control system modernization for 100,000kw Unit, Canaday Station, Central Nebraska Power and Irrigation District; 20,000kw Gas Turbine Unit No. 1, City of Ames, Iowa; two 66,000kw Units, Thu Duc Station, Saigon Power Co., South Vietnam; new Heating Plant, University of Northern Iowa, Cedar Falls, Iowa; 457,000kw Nuclear Unit No. 1, Fort Calhoun Station, Omaha Public Power District, Nebraska; Power Source Study and Report, City of Ames, Iowa.
1965 to 1968	-	Gibbs, Hill, Durham & Richardson, Inc., Omaha, Nebraska. Project Engineer responsible for overall project management for steam electric generating stations including 33,000kw coal and gas fired additions to the municipal power plant City of Ames, Iowa, and three plant modernization projects for Des Moines Power Station No. 2 of the Iowa Power & Light Company, Des Moines, Iowa. The Ames project included completely new coal storage handling and ash disposal facilities. Power source study and report for the City of Lincoln, Nebraska.
1963 to 1965	-	Gibbs, Hill, Durham & Richardson, Inc., Omaha, Nebraska. Mechanical Engineer responsible for mechanical design for several modernization projects for the Des Moines Power Station No. 2 of the Iowa Power & Light Company, Des Moines, Iowa. These projects included a comprehensive rebuilding and centralizing of controls for five turbine-generators and four boilers and major revisions to the condensate removal systems of the five turbine-generators to simplify plant operating labor.
1961 to 1963	-	Bucher & Willis Consulting Engineers, Kansas City, Missouri. Branch Office Manager responsible for design of projects and management of office engaged in field surveys, aerial photography and preparation of plans and specifications for a variety of projects including cable routing and plans for 300 miles of transcontinental telephone cable for American Telephone and Telegraph Company, highway bridges for Johnson County, Kansas, and Jackson County, Missouri.
1954 to 1961	-	Black and Veatch Consulting Engineers, Kansas City, Missouri. Specification Group coordinator and specifically responsible for preparation of specifications for equipment and construction of 25 steam power plant projects.

GEORGE T. FLAMM, R.A.

Supervising Architect

GIBBS & HILL, Inc.

1941-1942	•	College of the City of New York - Engineering
1950	•	Cooper Union - Diploma in Architecture
1967-Date	•	Supervising Architect, Gibbs & Hill, Inc., New York, New York. Architecture and supervision of architectural design, projects of the Company.
1961-1967	•	Division Architect, New York Division, R.H. Macy Co., New York, New York. Liaison and coordination of interior and building design of large department stores by architectural firms. Program and design criteria development.
1958-1961	•	Chief Architect, Schofield & Weed, New York, New York. In charge of design and drafting in architectural firm handling restaurants, stores and industrial buildings.
1955-1958	•	Architect, The M.W. Kellogg Co., New York, New York. Chief designer and project manager for office buildings, laboratories, and industrial buildings, including an award-winning refinery building for Kennecott Copper Co.
1954-1955	•	Architect, Ketchum, Gina and Sharp, New York, New York. Design and working drawings for schools, a department store and a nursing home.
1951-1954	•	Architect, Isadore Rosenfield, New York, New York. Design and field supervision of hospital projects.
1946-1951	•	Designer, Amos Parrish, New York, New York. Design of commercial buildings and interiors.
1942-1946	•	Service in U.S. Army.

RAYMOND C. HULTMAN, P.E.

Structural Engineer
Gibbs, Hill, Durham & Richardson

Education	-	Bachelor of Science in Civil Engineering, University of Omaha. Master of Science in Civil Engineering (Structural Major), University of Nebraska at Omaha.
Registration	-	Professional Engineer--Colorado.
1967 to Present	-	Gibbs, Hill, Durham & Richardson. Structural Engineer. Design two 66,000kw units, Thu Duc Station, Saigon Power Co., South Vietnam; 20,000kw Gas Turbine Unit No. 1, City of Ames, Iowa; Pile Supported Raw Water Intake Structure, Site Facilities and Access Bridge, City of Texarkana, Texas; 457,000kw Nuclear Unit No. 1, Fort Calhoun Station, Omaha Public Power District, Nebraska.
1965 to 1967	-	U.S. Army Corps of Engineers, Omaha District. Bridge Designer. Highway and service bridges.
1966 to 1970	-	Civil Engineering Department, University of Omaha. Part time instructor.

HARRY B. MCCARL, P.E.

Instrument and Control Engineer
Gibbs, Hill, Durham & Richardson

Education	-	Bachelor of Science in Chemical Engineering, Iowa State University. Master of Science in Chemical Engineering, Case Institute of Technology.
Registration	-	Professional Engineer--Nebraska.
1965 to Present	-	Gibbs, Hill, Durham & Richardson. Mechanical Engineer. Design, Instrumentation and Controls on Modernization System for 100,000kw Unit, Canaday Station, Central Nebraska Power & Irrigation District; 20,000kw Gas Turbine Unit No. 1, City of Ames, Iowa; Two 66,000kw Units, Thu Duc Station, Saigon Power Co., South Vietnam; New Heating Plant, University of Northern Iowa, Cedar Falls, Iowa; 457,000kw Nuclear Unit No. 1 Fort Calhoun Station, Omaha Public Power District, Nebraska; Preparation of Power Plant Pollution Study Report, Western Electric Co., Omaha, Nebraska; Chilled Water System, University of Nebraska, Lincoln, Nebraska; 216,000kw Unit No. 5, North Omaha Station, Omaha Public Power District, Nebraska; 33,000kw Unit No. 7, City of Ames, Iowa; Modernization of Power Station No. 2, Iowa Power and Light Co., Des Moines, Iowa.
1954 to 1965	-	Bailey Meter Company, Kansas City, Missouri. Service Engineer, Service Manager, Sales Engineer. Start up and Control Systems, Pneumatic and Electric, for Power and Process Utilities in a five state area. Utility Units ranged from 12,500kw to 200,000kw capacity.
1948 to 1954	-	Bailey Meter Company, Cleveland, Ohio. Contract Engineer. Responsible for processing equipment and control systems through manufacturing production, involving direct liaison with all company facilities and client representatives.

RICHARD K. BECK

Design Engineer - Mechanical
Gibbs, Hill, Durham & Richardson

Education - Manhattan Technical Institute.

1965 to Present - Gibbs, Hill, Durham & Richardson, Inc., Omaha, Nebraska. Design Engineer - Mechanical. Supervision of drafting room, mechanical design, instrumentation. 20,000kw Gas Turbine Unit No. 1, City of Ames, Iowa; two 66,000kw Units, Thu Duc Station, Saigon Power Co., South Vietnam; 457,000kw Nuclear Unit No. 1, Fort Calhoun Station, Omaha Public Power District, Nebraska; 216,000kw Unit No. 5, North Omaha Station, Omaha Public Power District, Nebraska.

1951 to 1965 - Gibbs & Hill, Inc., New York. Assistant Design Engineer-Mechanical, Instrumentation. Steam-electric generating plants, water treatment plants, sewage disposal plants, gas turbine and diesel plants and pumping stations, including Leon Creek Unit No. 4, 100,000kw; W.B. Tuttle Plant Units No. 2 and 3, 100,000kw each; W.B. Tuttle Plant Unit No. 4, 175,000kw and Mission Road Unit No. 3, 100,000kw, for the City Public Service Board, San Antonio, Texas; Lada Power Plant 50,000kw in Spain for Westinghouse Electric International Co.; Kosovo Unit No. 1, 62,500kw, Belgrade, Yugoslavia; Bari Italy Power Plant, three Units 62,500kw each for Ansaldo S.A.; two 12,500kw barge mounted power plants and 8000 HP seawater pumping station supplying a 36" pipe line from Port Brega to Zelten including a water pumping and injection field at Zelten, Libya for ESSO Standard (Libya), Inc and a General Electric Company Pilot Plastic Plant for Crawford and Russell, Inc. Projects on the Savannah River Plant for the E. I. duPont Company included steam-electric and diesel power plants, water treatment plants, sewage disposal plants, and river pumping stations.

1949 to 1951 - Byrne Associates, New York. Design draftsman. Steam-electric generating plants and industrial facilities including field testing for New York City Smoke Control Commissioner.

TAI C. HSIEH, Ph.D.

Engineer - Structural

(Soil Mechanics and Foundations)

GIBBS & HILL, Inc.

1959	• Taiwan University - B.S., Hydraulic Engineering
1964	• Virginia Polytechnic Institute - M.S., Soil Mechanics
1967	• Virginia Polytechnic Institute - Ph.D., Civil Engineering
1970-Date	• Engineer-Structural, Gibbs & Hill, Inc., New York, New York. Engineering and consultation in the Structural Engineering Department, on special assignments in engineering geology, soil mechanics and foundations. Design of earth dam and subsurface investigation for highway relocation for Harrison Power Station, Allegheny Power System. Investigation of waterfront structures, Wards Island Pollution Control Extension, City of New York.
1969-1970	• Assistant Engineer-Structural, Gibbs & Hill, Inc. Subsurface investigations: substations for Long Island Rail Road modernization, Metropolitan Transportation Authority; three 650-Mw units, Harrison Power Station, Allegheny Power System; large nickel mining and process complex, Guatemala, International Nickel Co. of Canada, Ltd.
1967-1969	• Soils Engineer, Madigan-Hyland, Inc., Long Island City, New York. Subsurface investigations; selection of foundation types for highway bridges; analysis of settlement and stability problems.
1965-1967	• Soils Engineer, Hayes, Seay, Mattern & Mattern, Roanoke, Virginia. Design of individual spread footings, continuous footings and pile foundations for multistory buildings and highway bridges. Design of retaining wall for highway embankment.

JOSEPH R. MEGNA

Supervising Planning and Scheduling Engineer

GIBBS & HILL, Inc.

1970-Date • Supervising Planning and Scheduling Engineer, Gibbs & Hill, Inc., New York, New York. Supervisor of Planning and Scheduling Division. Production, monitoring, up-dating and computer processing of CPM and PERT schedules, for control of engineering, procurement and construction activities of the Company.

1970 • Assistant Manager, Planning and Scheduling, Parsons-Jurden Corporation, New York, New York. Senior Planning and Scheduling Engineer on iron ore benification plant at CopperHill, Tennessee, for Cities Service Company.

1968-1970 • Senior Consultant, Mauchly Associates, Inc., Montgomeryville, Pennsylvania. Assistance to Manager of Planning and Scheduling for Westinghouse Electric Corporation during construction of Units No. 2 and No. 3, Indian Point Nuclear Generating Station.

1967-1968 • Manager of Planning and Scheduling, Builders Estimating Services, Inc., New York, New York. Planning and scheduling of projects, including industrial complex for Clairol, Inc. and U.S. Post Office.

1966-1967 • Senior Planning and Scheduling Engineer, Parsons-Jurden Corporation, New York, New York. Planning, scheduling and control functions relating to engineering, purchasing and construction. Projects included Chilean 11,000-TPD Underground Copper Concentrator and 9,000-TPD Canadian Ore Beneficiation Plant.

1960-1965 • Administrative Engineer, Burns and Roe, Inc., New York, New York. Job site planning, scheduling administrative control, progress and financial reporting. Projects included heavy water plant, experimental lithium - cooled reactor and generating stations.

1956-1960 • Scheduling Department Head, Vitro Engineering Company. Preparation and coordination of design and construction schedules, progress reports and man hour budgets and controls. Projects included Indian Point Atomic Generating Station, Cornell University Research Reactor, Indian Fertilizer Plant, Radiological Laboratory, The Texas Company and Lockheed Nuclear Aircraft: Development Center.

1955-1956 • Construction Superintendent, Safeway Stores, Inc., New York, New York. Supervision of design and construction of shopping centers.

1954-1955 • Field Engineer, American Gas and Electric Company, New York, New York. Supervision of mechanical work on 200-Mw Power Plant for Indiana and Michigan Electric Co.

1948-1954 • Lieutenant, Senior Grade, U.S. Navy. Engineering activities including marine, salvage, deep-sea diving and naval architecture.

SHERWOOD H. SCHWARTZ

Purchasing Manager

GIBBS & HILL, Inc.

1938-1940	-	Brooklyn College - Liberal Arts
1943	-	U.S. Merchant Marine Academy - B.S.
1947-1949	-	College of the City of New York - Foreign Trade.
1968-Date	-	Purchasing Manager, Gibbs & Hill, Inc., New York, New York. In charge of purchasing activities of the Company including purchasing for clients, as below, and internal requirements.
1966-1968	-	Chief Purchaser, Gibbs & Hill, Inc. Assistance to Purchasing Manager. In charge of purchasing activities on behalf of clients: preparation of contracts, expediting equipment, arranging export shipping space and export clearance with freight forwarder, financial control of foreign projects, scheduling and control of field inspection and expediting.
1960-1966	-	Purchaser - Expediter, Foreign Industrial Equipment Corp. (affiliate of Gibbs & Hill), New York, New York. Preparation of contracts, expediting, shipping and banking operations; correspondence with clients and suppliers.
1955-1959	-	Operations Manager, Sagus Marine Corporation, New York, New York. Management of chartered vessel fleet engaged in worldwide tramp shipping. Supervision of grain loading, inspection of vessel holds and condition. Agent for foreign vessels visiting New York.
1950-1955	-	Expediter, Foreign Industrial Equipment Corp. Expediting; preparation of financial and shipping reports.
1946-1950	-	Shipping-Freight Clerk, Association Technique de l'Importation Charbonniere, New York, New York. Supervision of freight payment section; examination and payment of freight invoices for chartered vessels under ECA Program. Review of stevedore damage claims and damage surveys.
1943-1946	-	Chief Mate, Weyerhaeuser Steamship Company, Tacoma, Washington. In charge of Deck Department of ten 12000-ton vessels; loading and storage of cargo for worldwide shipping; navigation supervision of deck personnel; and maintenance of gear and equipment.
1941-1942	-	Material Clerk, Picatinny Arsenal, U.S. Army Ordnance Department. Duties included reading construction blueprints and ordering necessary equipment.

JAMES C. SHILLITO, P.E.

Chief Estimating Engineer

GIBBS & HILL, Inc.

1943	• The Cooper Union - Bachelor of Civil Engineering
1971-Date	• Chief Estimating Engineer, Gibbs & Hill, Inc., New York, New York. In charge of construction cost estimates for all projects.
1956-1971	• Chief Estimator, Burns and Roe, Inc., Oradell, New Jersey. Estimating on world-wide projects: Project Sage, Project Mercury, BOMARC, ABM Facilities, desalination plants; nuclear power plants at Shippinport, Pennsylvania, Oyster Creek, New Jersey, Hanford, Washington, Cooper Nuclear, Nebraska, and Three Mile Island, Pennsylvania; and fossil-fueled power plants.
1955-1956	• Chief Estimator, Radory Construction Corp., West Hempstead, New York. Estimating and design of temporary construction facilities and road and sewer design and construction for housing developments.
1952-1955	• Chief Estimator, Merritt-Chapman & Scott Corp., New York, New York. Estimating for all types of construction, world-wide.
1950-1952	• Project Manager and Estimator, Hendrickson Bros., Valley Stream, New York. Design of sheeting and bracing for sewer trenches, cofferdams for intake structures, falsework for concrete bridges and reinforcing. Project management for cost control and coordination of field and office.
1947-1950	• Job Engineer, Superintendent and Estimator, Merritt-Chapman & Scott Corp., New York, New York. Engineering and design for tunnels, paper mills, etc.
1946-1947	• Office Engineer, Starrett Bros & Eken, New York, New York. Footing redesign, surveying calculations, subcontractor payments and as-built drawings.
1943-1946	• T/5, U.S. Army Corps of Engineers, photomapping battalion duties including assignment as a Geodetic Computer.
1942-1943	• Party Chief and Office Engineer, Floyd Bennett Naval Air Station, Brooklyn, New York. Party chief on layout of roads, runways, sewers and soundings for dredging. Surveying calculations and topographic mapping.

JOHN J. McPHAIL

Manager of Plant Test and Operations

GIBBS & HILL, Inc.

1938 • Columbia University - B.S., Mechanical Engineering

1969-Date • Manager of Plant Test and Operations, Gibbs & Hill, Inc., New York, New York. Power plant operations, initial startup and equipment functional testing. Evaluation of plant equipment performance and acceptance tests. Preparation of technical operations manuals and associated technical publications.

1968-1969 • Assistant Manager, Plant Test and Operations, Burns and Roe, Inc., Oradell, New Jersey. Supervision of power plant operations, initial startup, equipment functional testing and performance of ASME acceptance tests. Preparation of technical operations manuals, plant personnel instructional material and associated technical publications.

1966-1968 • Task Manager, Burns and Roe, Inc., Sacramento Office, Sacramento, California. Supervision of technical writing staff and field engineers in developing plant operations and maintenance procedures for the California State Water Project hydroelectric generating stations and pumped storage plants.

1963-1966 • Power Plant Manager, Burns and Roe, Inc., Oradell, New Jersey. In charge of operations and maintenance of steam-electric power plant supporting defense activities associated with the Ballistic Missile Early Warning System (BMEWS) in Thule, Greenland for the American Defense Command (ADC). Coordinating Engineer in charge of startup and activation of the Leland Olds 200-Mw generating station in Stanton, North Dakota and the combined electric generation and desalination plant at the U.S. Naval Base in Guantanamo, Cuba.

1959-1962 • Project Engineer, Pope, Evans & Robbins, New York, New York. Consulting engineering services for power plant operations. Evaluation and application of power plant equipment for plant modernization and plant betterment projects.

1955-1959 • Senior Mechanical Engineer, Ebasco International Corporation, New York, New York. Consultation, investigations and studies related to operation of power plants in Latin America; supervision of mechanical equipment installation and training of power plant personnel.

1952-1955 • Engineering Instructor, U.S. Maritime Commission Training Station, Brooklyn, New York. Preparation of curricula for engineering training courses; instruction of licensed marine engineers in the operation and maintenance of high pressure steam turbines, boilers, generators, motors and pumping equipment. Development of training manuals covering maintenance and operations of power plants, fire-fighting techniques and safety subjects.

1946-1952 • Chief Marine Engineer, Gulf Oil Corporation; New York, New York. Chief Engineer on ocean-going tankers. Supervision of engineering personnel, direction of operation and maintenance of steam turbine-electric propulsion units, boilers and related auxiliary equipment.

1940-1946 • Chief Engineering Officer (Commander), U.S. Maritime Commission, New York, New York. Supervision of operating personnel, steam propulsion equipment, boilers and auxiliaries on tankers, troopships and cargo vessels operated in conjunction with U.S. Navy task forces.

MICHAEL MICHNOWSKI

Traffic Coordinator
Gibbs & Hill, Inc.

Related Education - 1970 - 1971. Completed an advanced course in Export-Import at the Academy of Advanced Traffic, New York City. Attending Baruch College City of New York University, New York City. Majoring International Trade & Traffic Management.

1969 to Present - Gibbs & Hill, Inc., New York, Traffic Coordinator. Coordinate on behalf of Clients the movement of material and equipment being exported or imported. Arrange for services of forwarder, steamship companies and air carriers. Arrange routing and trace movement of shipments. Assist the Purchasers, Estimating Department, Accounting, and Expediters by furnishing rates, status of shipment, shipping procedures, and advise most economical and best methods for all export and import movements.

1960 to 1969 - Dyson Shipping Company, Inc. (Int'l Freight Forwarder), New York, Department Head, Projects. Supervisor of personnel assigned to the Export function of the department. Arranged Bookings and preparation of export, insurance and banking documentation, routing and transportation services for Clients, (Kaiser Engineers - Chemtex, Inc., India Supply Mission, Celanese Corp., H. J. Heinz).

JOHN E. GILL

Purchaser
Gibbs & Hill, Inc.

1970 to Present - Gibbs & Hill, Inc., New York, Purchaser. Engaged in purchasing and preparation of contracts for Power Stations and Air Pollution Control Projects.

1967 to 1970 - Grove International Corporation, Purchasing Agent. Solicit invitations to bid, make awards and prepare contracts for all types of equipment and materials required for construction of missile bases and military cantonments located in Saudi Arabia.

1966 to 1967 - Walter Kidde Constructors, Inc., Purchasing Agent. Responsible for purchasing of all equipment and materials required for construction of Air Force Base in South Vietnam.

1964 to 1966 - Kaiser Engineers & Constructors, Inc., Senior Buyer. Responsible for purchasing equipment and materials for construction of Hydroelectric Dam Project in Venezuela, South America.

1951 to 1964 - Dougherty Overseas, Inc., Purchasing Agent. Responsible for purchasing equipment and materials for following construction projects:

Air Force Base - Newfoundland
Bomber Apron and P.O.L. Facilities - Azores
Khmer Highway - Phnom Penh, Cambodia
Kandahar-Spin Baldak Highway - Afghanistan

1940 to 1951 - Magnus Metal Division, National Lead Company, Assistant Purchasing Agent. Assist Purchasing Agent in all phases of procurement and expediting.

THOMAS E. BURNS

Expediter
Gibbs & Hill, Inc.

1971 to Present	-	Gibbs & Hill, Inc., New York, Expediter. Expedite materials and equipment for three units each 650 MW Harrison Power Station.
1970	-	Cosmopolitan Shipping Company, Inc., Assistant Purchasing Agent. Buying Deck, Engine and Steward stores for fleet of fourteen vessels engaged in world-wide trade. Expediting all equipment and supplies purchased to the vessels.
1945 to 1970	-	American Trading and Production Corporation, New York, Purchasing Agent. Buying Deck, Engine and Steward stores, also food for fleet of nine vessels engaged in coastal, inter-coastal and world-wide trade. Expediting all equipment and supplies purchased to the vessels.

HERBERT M. WALKER

Superintendent of Training and Operations
Gibbs & Hill, Inc.

Education	- California State Polytechnic College - 1948, Bachelor of Science.
1970 to Present	- Gibbs & Hill, Inc., New York, Superintendent of Training and Operations. On field assignments direction and coordination of plant personnel training activities and station startup and operations. Preparation and development of technical operations manuals, plant operating procedures and instructional material for plant personnel and trainees. Assignment to field site: Yul-Do Thermal Power Plant, Inchon, Korea.
1969 to 1970	- Wisconsin Power & Light Company, Sheboygan, Wisconsin, Shift Supervisor. Startup, firing and loading on four units of the Edgewater Station. Training operating personnel.
1965 to 1969	- Basin Electric Cooperative, Stanton, North Dakota, Shift Supervisor. Coordination of startup operations between construction and the cooperative for 215 MW lignite-fired unit. Assistance in the selection and training of personnel.
1954 to 1965	- Tennessee Valley Authority, Drakesboro, Kentucky, Trainee to Control Room Operator. Startup and operation of Widow's Creek Steam Plant (six 125 MW units), Shawnee Plant (ten 135 MW units). Five units of the Colbert Steam Plant and the Paradise Steam Plant (two 650 MW units). Training of new operators and students.
1954	- Tennessee Valley Authority, Wilson Dam, Alabama, Chemical Aide. Sampling and analysis of chemical processes.
1949 to 1953	- Agriculture Instructor for Boards of Education in Illinois, Alabama and California.
1941 to 1943	- U.S. Army Air Force, Staff Sergeant. Maintenance and Operation of Aircraft Armament.

BYRON E. BUSH, SR.

Operations Supervisor
Gibbs & Hill, Inc.

Education	--	St. Bernard College - 1938-1939.
1970 to Present	-	Gibbs & Hill, Inc., New York, Operations Supervisor. On field assignments direction and coordination of plant startup and operations. Assistance in plant personnel training activities. In the New York office assistance in preparation and development of technical operations manuals, plant operating procedures and instructional material for plant personnel and trainees. Assigned to field site: Yul-Do Thermal Power Plant, Inchon, Korea.
1969 to 1970	-	Burns and Roe, Inc., Oradell, New Jersey, Senior Plant Test and Operations Engineer. Start-up of two 216 MW units, Palo Seco Steam-Electric Station, Puerto Rico.
1966 to 1969	-	Commonwealth Associates, Inc., Jackson, Michigan, Senior Operating Engineer to Project Engineer. Resident project representative at Lyallpur Thermal Power Station, two 66-MW units, West Pakistan. Senior Plant Operating Engineer and Senior Consultant at Multan Natural Gas Power Station, four 66-MW units, Water and Power Development Authority of West Pakistan.
1966	-	Kuljian Corporation, Philadelphia, Pennsylvania, Operating Supervisor. Supervision of operation of two 66-MW units, Korangi Thermal Power Station, Karachi, West Pakistan.
1951 to 1966	-	Tennessee Valley Authority, Chattancoga, Tennessee, Power Plant Operator. Plant operation assignments: four steam-electric generating stations comprising 18 units; hydroelectric stations at Wilson Dam, Alabama, and Watts Bar Dam, Tennessee comprising 25 units.

DONALD P. RUTLAND

General Field Superintendent

GIBBS & HILL, Inc.

1926 • New York University - B.S., Electrical Engineering.

1955-Date • General Field Superintendent, Gibbs & Hill, Inc., New York, New York. In charge of construction at first hand, Deepwater station, Atlantic City Electric Co.; one 23,000-kw steam-electric generating unit; one 79,000-kw steam-electric generating unit; coal handling facilities; reservoir and dam regulating water supply to 1950-Mw Harrison Station, West Virginia, Allegheny Power System. Supervision of construction, Elmer W. Stout station 100,000-kw Unit No. 6, Indianapolis Power & Light Co.: North Omaha Generating Station, 140,000-kw Unit No. 4, Omaha Public Power District.; substations and third rail, Lindenwold, rapid transit line, PATCO, Delaware River Port Authority.

1945-1955 • Construction Superintendent, Gibbs & Hill, Inc. In charge of construction: one 60,000-kw steam-electric generating unit, Deepwater station, Atlantic City Electric Co.; electric power, steam and air facilities, Fairless Works, U.S. Steel Corp., Morrisville, Pennsylvania; two 160,000-lb per hr boilers, Perry 'W' plant, Indianapolis Power & Light Co.; two 50,000-lb per hr boilers, Utica Knitting Co., Utica, New York; one 60,000-lb per hr boiler, Columbia Mills, Inc., Minetto, New York. Supervision of construction: four 320,000-lb per hr boilers and two 50,000-kw turbo-generators, Genoa Power Plant, Edisonvolta, Milan, Italy.

1944-1945 • Assistant Construction Superintendent, Gibbs & Hill, Inc. Additions to Indianapolis Power & Light Company's Perry 'K' and Elmer W. Stout power plants; addition to Mission Road steam-electric generating station, City Public Service Board, San Antonio, Texas.

1936-1944 • Field Engineer, Gibbs & Hill, Inc. Power plant for Koppers Co., Kobuta, Pennsylvania. High-voltage transmission line, Bridgeport to New Haven, Connecticut, United Iluminating Co.; addition to steam-electric generating station, Derby Gas & Electric Co., Derby, Connecticut. Job Engineer on design of boiler and generating equipment and plant modernization, Detroit Sulphite Pulp & Paper Co. Draftsman and field checker, Paoli to Harrisburg electrification, Pennsylvania Railroad Co.

1935-1936 • Engineer Mechanic Serviceman, Public Service Engineering Co., New York, New York. Surveys, installation and servicing of heating requirements for domestic and commercial establishment.

1934-1935 • Draftsman, New York, New Haven & Hartford Railroad Co. Design and inspection of multiple-unit control doors.

1930-1934 • Draftsman, Gibbs & Hill, Inc. Design of catenary system and structures for electrification, Pennsylvania Railroad Co.

1927-1930 • Special Apprentice and Assistant Engineer, New York, New Haven & Hartford Railroad Co. Study of power contracts and design; catenary systems and structures; inspection of power and substation installations, etc.

GUY W. BRADFORD, Jr.

Mechanical Engineer

GIBBS & HILL, Inc.

1949 - United States Merchant Marine Academy - Bachelor of Science

1964-Date - Mechanical Engineer, Gibbs & Hill, Inc., New York, New York. Mechanical engineer during construction, start-up and supervision of performance tests: Units Nos. 1 and 2, each 140,000 kw, Chandrapura Steam-Electric Station, Damodar Valley Corporation, India; 200-Mw Unit No. 5, North Omaha Station, Omaha Public Power District; 470-Mw Fort Calhoun Nuclear Power Station, Omaha Public Power District. Preparation of plant operating instructions, CHEVAP Station, two 80,000-kw units, Rio de Janeiro, Brazil. Preparation of mechanical erection contract documents, 360-Mwe NOK nuclear power project, Switzerland. Design of circulating water and other systems, 300-Mw ACECA Station, Hidroelectrica Espanola, S.A. and Union Electrica Madrilena, Spain.

1962-1964 - Self employed, Tucson, Arizona.

1954-1962 - Senior Service Engineer, Foster Wheeler Corp., New York, New York. Construction Engineering and start-up duties in connection with the following projects: Martins Creek Station, Units Nos. 1 and 2, each 160,000 kw, and Holtwood Station, Unit No. 1, 109,000 kw, Pennsylvania Power & Light Co.; Meramec Station, Unit No. 3, 250,000 kw, Union Electric Co.; East River Station, Unit No. 7, 180,000 kw, Consolidated Edison Company of New York, Inc.; Black Dog Station, Unit No 3, 100,000 kw, Northern States Power Co.; Cane Run Station, three units, 100,000 kw to 130,000 kw, Louisville Gas & Electric Co. Personnel training. Operational service for steam generators, condensers, pumps, heaters and other equipment, numerous projects. Preparation of maintenance instructions. Equipment development. Supervision of technical writing section.

1949-1954 - First Assistant Marine Engineer, North American Shipping and Trading Co., New York, New York. Operation of power plants and supervision and training of engine room crews on ships.

1943-1945 - Lithographic Draftsman, Army Map Service, Washington, D.C. Drafting on metal plates.

JOHN M. HENDERSON, JR.

Electrical Engineer

GIBBS & HILL, Inc.

1956 • Tri-State College - B.S., Electrical Engineering

1969-Date • Electrical Engineer, Gibbs & Hill, Inc., New York, New York. In charge of electrical engineering during the construction and start-up of 470-Mw Fort Calhoun power station. Assistance to Resident Construction Manager in direction, coordination and inspection of all electric and instrumentation work. Supervision of start-up and testing of electrical installations.

1968-1969 • Chief Electrical Engineer, Howard S. Wright & Associates, Idaho Falls, Idaho. Supervision of electrical and instrument engineering departments for the construction of two nuclear reactor projects, National Reactor Testing Station, Idaho Falls, Idaho. Supervision of engineering department, project estimating and resolution of electrical and instrument systems.

1965-1968 • Electrical Engineer, Burns and Roe, Inc., Oradell, New Jersey. Construction supervision of two 400-Mw steam-electric turbine generators, two 200,000 pound-per-hr package boilers and addition of sixth cell to heat dissipation system and 500-kv bundled conductor transmission line, Hanford Reactor Complex, Washington.

1956-1965 • Cadet Engineer to Senior Field Engineer, Bailey Meter Company, Wickliffe, Ohio. Construction supervision and initial start-up: analog and digital control system for 120-Mw steam-electric generating station with automatic pulverizer and burner control system; analog control system, Hanford Reactor Complex heat dissipation system; electric analog control and digital data system including computer for heat cycle analysis of two 220-Mw steam turbine generators and boilers; and two digital data systems in hydroelectric plants, Chelan County PUD, Wenatchee, Washington. Automation of conventional Naval propulsion systems aboard four U.S. Navy Destroyers.

THEODORE KUSMER

Construction Cost Engineer - Staff

GIBBS & HILL, Inc.

1949 • Dyke Spencerian College - B.A., Accounting.

1969-Date • Construction Cost Engineer - Staff, Gibbs & Hill, Inc., New York, New York. Preparation and/or analysis of cost reports and budgets. Liaison with Estimating Department and field construction personnel in matters pertaining to cost control and reporting. Preparation and control of charts of project accounts.

1965-1969 • Cost Engineer, Parsons-Jurden Corp., New York, New York. Cost engineering: alumina/aluminum reduction complex and a copper concentrator; and a copper, lead zinc concentrator, Texas Gulf Sulphur Company. Establishment and maintenance of budget and cost records. Evaluation of drawing completions and forecasting completion costs. Worked with the computer group setting up programs for construction cost reports. Chief Cost Engineer (1965-1967) in the field during construction of an extension to a taconite iron ore benefication plant for Erie Mining Company.

1963-1965 • Chief Accountant and Office Manager, Morse Boulger Inc., Corona, New York. Supervision of postings in books of original entry and in the general ledger; assistance in the preparation of financial statements; maintenance of costs by jobs; checking estimated costs against actual costs; forecasting completed costs; and preparation of schedules by divisions, for the design, manufacture and building of municipal, industrial and commercial incinerators.

1961-1963 • Chief Accountant and Field Office Manager, Elmhurst Contracting Company, Corona, New York. Maintenance of accounting records: levee project, State of Pennsylvania; and earth fill dam, State of New Jersey.

1958-1960 • Office Manager. Twinburg Silica Sand and Gravel Company, Twinburg, Ohio. Accounting functions, receipt and disbursement of funds and issuance of financial reports. Cost determination and reports on processing and delivery of sand and gravel.

1955-1958 • Chief Field Accountant and Office Manager, H.K. Ferguson Company, Cleveland, Ohio. Supervision of accounting and office functions for a stamping plant for the Chrysler Corporation, including monthly pay estimates, weekly labor cost reports and monthly job cost statements. Chief Paymaster and Job Cost Accountant (1955-1956), preparation and disbursement of weekly payrolls for a parts plant for the Ford Motor Company.

1952-1955 • Chief Field Accountant and Office Manager, E. J. Etkin Construction Company, Detroit, Michigan, and Collings & Catlin, Port Huron, Michigan (joint venture). Accounting and office functions, preparation, receipt and disbursement of monthly pay estimates, field purchasing and expedition: military tank test cell, U.S. Corps of Engineers; and County-City building, jail and garage for the St. Clair County, Michigan, Board of Aurhority.

1949-1952 • Chief Accountant and Office Manager, Austin Company, Cleveland, Ohio. Maintenance of financial records, preparation of statements, weekly labor cost reports and quarterly job condition statements: department store for Federated Department Stores; dormitory complex for Simmons College, and factory addition for the Wilber Driver Corp.

JOHN A. ZIGMOND

Field Office Manager
Gibbs & Hill, Inc.

1971 to Present - Gibbs & Hill, Inc., New York, Field Office Manager. In charge of Accounting, Costs, Warehousing, Progress Payments, hiring of local office personnel, property accountability during the construction of two air pollution control systems for the Elrama and Phillips Power Plants, Duquesne Light Company, Pittsburgh, Pa.

1963 to 1971 - Eichleay Corporation, Pittsburgh, Pa., Construction Office Manager. Responsible for all job-site accounting and bookkeeping at the following job-sites:

Witco Chemical Corporation, Petrolia, Pa.

Wheeling Pgh Steel, Monessen, Pa. - Blast furnace reline

Allegheny Lughum, Dunkirk, N.Y. - Installation of the bar mill

Allegheny Lughum, Leechbung, Pa. - Installation of electric furnace

Penn. Dixle Cement, W. Winfield, Pa. - Modifications to cement plant

Wheeling Pgh, Monessen, Pa. - Installation of sinter plant and soaking pits

P. H. Gladfeltel, Spring Grove, Pa. - Addition to paper mill

D. M. Baek, Roaring Springs, Pa. - Addition to paper mill

Meade Paper, Chillicothe, Ohio - Paper machine rebuild

U.S. Steel Corporation, McKeesport-Duquesne-Braddock and Irwin Works - New mills and/or additions

Cleveland Electric Illuminating, Avon Lake, Ohio - Power House, Toronto, Canada - Anaconda American Bros. additions

1961 to 1963 - Power Piping Company, Field Accountant. Accounting and bookkeeping for various steel mill projects in the greater Pittsburgh area.

1956 to 1961 - Eichleay Corporation Westinghouse Atomic Energy, West Mifflin, Pa., U.S. Steel Corp., Construction Office Manager. Various steel mill additions in the greater Pittsburgh area.

B. QUALITY ASSURANCE

The following management personnel are directly responsible for the quality assurance of the engineering services performed for the Semarang Steam Power Plant Project:

Name	Title
Robert S. Pettibone	Vice President & Engineering Manager
John G. Barrie	Assistant to the Vice President, Operations
Haskins S. Eubank	Chief Electrical Engineer
Frederick W. Gettler, Jr.	Chief Mechanical Engineer
Kenneth L. Scheppele	Chief Structural Engineer
William W. Budde	Chief Architect Engineer
William J. Grady	Construction Manager

ROBERT S. PETTIBONE, P.E.

Vice President and Engineering Manager

GIBBS & HILL, Inc.

1947 - Purdue University - B.S., Metallurgical Engineering

1970-Date - Vice President and Engineering Manager, Gibbs & Hill, Inc., New York, New York. Responsible for technical and administrative activities of the Architectural and Structural, Mechanical, Electrical, Systems, Hydraulic and Sanitary Engineering Departments.

1969-1970 - Engineering Manager, Gibbs & Hill, Inc. Duties as above.

1966-1969 - Chief Mechanical Engineer, Gibbs & Hill, Inc. In charge of all mechanical engineering: nuclear power plants to 500 Mwe; conventional fossil-fueled power plant units to 650 Mw; gas-turbine power units to 10,000 kw; nuclear research facilities; industrial facilities; water treatment; desalination.

1965-1966 - Consulting Engineer - Mechanical, Gibbs & Hill, Inc. Consultation to clients and principals of the firm on special problems in mechanical engineering, pertaining to the planning, design and operation of large thermal electric generating units, including nuclear. Participation in supervision of work of the Mechanical Engineering Department. Studies for proposed nuclear power projects, including a 350-450-Mw range project for Central Vermont Public Service Corporation and a 400-Mw range project for Omaha Public Power District.

1957-1965 - Senior Mechanical Engineer, Hydro-Electric Power Commission of Ontario, Toronto, Ontario. In charge of Mechanical Engineering Section. Responsible for conceptual design and layout of all thermal stations, specification and purchase of mechanical equipment and systems for new generating units, heat balance, and cycle analysis, performance testing, and advisory functions during start-up. Projects as follows: Lakeview Generating Station, Toronto, comprising eight 300,000-kw coal-fired subcritical units; Lambton Station, Sarnia, comprising four 500,000-kw coal-fired subcritical units; conventional portion of 20,000-kwe nuclear demonstration unit at Rolphton, utilizing a pressurized heavy water reactor; conventional portion of Douglas Point, a 200,000-kwe nuclear power station at Kincardine, utilizing a pressurized heavy water reactor; Pickering Nuclear Power Station, Toronto, comprising two 540,000-kwe units. Also hydroelectric power projects.

1952-1957 - Staff Engineer, Boddy, Benjamin & Woodhouse, Inc., Detroit, Michigan. Engineering, design, estimating, bid analysis and construction supervision, steam power plants for automotive, chemical and pulp and paper industries.

1948-1952 - Project Engineer, W. Hawley & Co., Detroit, Michigan. Estimating and project liaison for constructor of utility and industrial steam plants.

1947-1948 - Engineer-in-Training, Union Iron Works, Erie, Pennsylvania. Boiler and process equipment manufacturer: assistance in preparation of estimates and performance computations.

1942-1945 - Aviation Cadet to Lieutenant, U.S. Naval Reserve. World War II service as Naval Aviator.

JOHN G. BARRIE, P.E.

Assistant To The Vice President - Operations

GIBBS & HILL, Inc.

1930 - New York University - B. S., Mechanical Engineering
1939 - University of Michigan - M. S., Mechanical Engineering

1969-Date - Assistant to the Vice President - Operations, New York, New York. Project Director, International Nickel Company. Projects and miscellaneous special assignments.

1966-1968 - Assistant to the Vice President-Engineering, Gibbs & Hill, Inc. Special assignments, and consultation on planning and design for power plant projects.

1954-1966 - Chief Mechanical Engineer, Gibbs & Hill, Inc. In charge of all mechanical engineering: nuclear power plants, to 300,000 kwe; conventional steam power-plant units to 320,000 kw; hydroelectric power units to 30,000 kw; gas-turbine power units 5,000 kw; nuclear research facilities; steam distribution facilities; industrial facilities; water and waste-treatment facilities; desalination facilities.

1953-1954 - Assistant Chief Mechanical Engineer, Gibbs & Hill, Inc. Supervision of mechanical engineering and design.

1950-1953 - Supervising Mechanical Engineer, Gibbs & Hill, Inc. In charge of mechanical design of Genoa and Piacenza steam-electric generating stations, Societa Edison, Milan, Italy. Supervised mechanical design of 60,000-kw reheat turbine generator unit for Deepwater Station, Atlantic City Electric Co.

1943-1950 - Engineer, Gibbs & Hill, Inc. Mechanical design and specifications: power plant and utility systems to service refinery at Sidon, Lebanon, of Mediterranean Refining Co., New York; electrostatic precipitators in Kips Bay Plant, New York Steam Corp.; addition to East Chicago Refinery power plant of Sinclair Refining Co.; Gennevilliers Power Station for French Supply Council, Washington, D.C.; Denver City Power Plant of Southwestern Public Service Co., Amarillo, Texas.

1940-1943 - Assistant Engineer (summers and part-time), Gibbs & Hill, Inc. Assisted with mechanical designs on steam power plants.

1931-1944 - Assistant Professor of Mechanical Engineering, New York University College of Engineering, New York, New York.

1930-1937 - Underground Plant Engineering, New York Telephone Company, New York, New York.

HASKINS S. EUBANK, P.E.

Chief Electrical Engineer

GIBBS & HILL, Inc.

1925-1927 - Virginia Polytechnic Institute - Electrical Engineering
1945 - New York University - Bachelor of Electrical Engineering

1963-Date - Chief Electrical Engineer, Gibbs & Hill, Inc., New York, New York. In charge of all electrical engineering of the company. Deputy Director (1965-1967) - Canambra Engineering Company - power and transmission study - South Central Brazil.

1960-1962 Assistant Chief Electrical Engineer, Gibbs & Hill, Inc. In general charge of electrical engineering and design: power plant projects, including fossil-fuel-fired thermal, gas-turbine and hydroelectric plants; substations; transmission and distribution; waste treatment plants; industrial and commercial facilities. Electric power surveys and reports. Electric systems studies and reports.

1953-1960 - Supervising Engineer - Electrical, Gibbs & Hill, Inc. Studies and reports: Transmission requirements, Cauca Valley Project, Colombia; complete electric power systems for United Kingdom of Libya (City of Tripoli and vicinity); U.S. Navy (Marine Corps Recruit Depot, Parris Island, South Carolina); Hernandez y Hermanos (electric utility), Pinar Del Río, Cuba; General Electric Co., Erie, Pa. Industrial Plant; Port of New York Authority (Idlewild Airport); Housatonic Public Service Corp., Derby, Conn., and Indonesian Ministry of Public Works and Power (City of Semarag and vicinity). Supervised electrical design: Ten Substation's to 345 kv, Consolidated Edison Co.; power plant additions, Deepwater Station, Atlantic City Electric Co.; facilities for prototype nuclear submarine power plant, Knolls Atomic Laboratory; Rehabilitation of electric system, Carapito Power Plant, Venezuela, Creole Petroleum Corp.; additions to electric distribution system, Brookhaven National Laboratory. Electrical engineering studies and estimates: Army Package Power Reactor; Puerto Cabello Power Plant, Venezuela; generating stations, Arabian-American Oil Co.

1950-1953 - Engineer - Electrical, Gibbs & Hill, Inc. In charge, electrical design: Power plant, Fairless Works, U.S. Steel Corp. (including coordination of plants for electric utilities); addition to pumping station, Atlantic City Electric Co. Studies for: Electrical rehabilitation, Pittsburgh Station power house and office building, Pennsylvania Railroad; electric requirements and power costs for shopping center, Garden State Plaza Corp.-R. H. Macy.

1942-1950 - Assistant Engineer - Electrical, Gibbs & Hill, Inc. Electrical design: additions to power plants at San Antonio, Texas and Indianapolis, Indiana; Harnes Power Plant, French Supply Council; Genova Power Plant, Societa Edison, Milan, Italy; power plant additions, Harborside Warehouse Co.; distribution systems, Koppers Co., Kobuta, Pennsylvania, and Sidon Refinery, Mediterranean Refining Co., Lebanon. Assisted in railway electrification studies.

1929-1942 - Division Engineer, Engineering Assistant, Yonkers and Westchester companies of Consolidated Edison Company of New York. In charge, distribution engineering office. Electrical design, all phases of distribution systems, including transmission. Engineering supervision, installation, maintenance and operation of gas and oil-filled cable systems.

1928-1929 - Survey Tracer, Brooklyn Edison Company, Brooklyn, New York. Layout and estimating of low-voltage distribution systems.

1927-1928 - Lineman, The Carolina Power & Light Co., Goldsboro, North Carolina. Installation and maintenance, distribution systems.

FREDERICK W. GETTLER, JR., P.E.

Chief Mechanical Engineer

GIBBS & HILL, Inc.

1950 - Cooper Union - Bachelor of Mechanical Engineering

1958 - International School of Nuclear Science & Engineering (Pennsylvania State University and Argonne National Laboratory) - Certificate.

1969-Date - Chief Mechanical Engineer, Gibbs & Hill, Inc., New York, New York. In charge of all mechanical engineering: nuclear power plants to 500 Mwe; conventional fossil-fueled power plant units to 650 Mw; gas-turbine power units to 10,000 kw; nuclear research facilities; industrial facilities; water treatment; desalination.

1969 - Assistant Chief Mechanical Engineer - Staff Engineering, Gibbs & Hill, Inc. Responsible to the department chief for the staff mechanical engineering function, whose purpose is to assure consistent development and adherence to latest technology in the work product, such as conceptual design, specifications, system and component design analysis, computation techniques, engineering and design standards and report preparation.

1965-1969 - Assistant Chief Mechanical Engineer - Nuclear, Gibbs & Hill, Inc. In charge of mechanical engineering for nuclear power projects of the Company. Site studies and hazards reports.

1962-1965 - Supervising Engineer - Mechanical (Nuclear), Gibbs & Hill, Inc. Supervision of mechanical engineering, location and arrangement, design and equipment selection, nuclear power projects of the Company, to 300,000 kwe.

1955-1962 - Engineer - Mechanical (Nuclear), Gibbs & Hill, Inc. Mechanical engineering: 266,000-kwe SENA underground nuclear power plant, Groupement Nucleaire Franco-Belge, Paris, France; Project EF, 272,000-kwe nuclear power plant, Societa Elettronucleare Italiana, Milan, Italy; Project BR 3, 11,500-kwe capacity Belgian nuclear power project, Westinghouse Electric International Co.; Escombreras thermal power plant, Units Nos. 1 and 2 (70,000 kw each) and Unit No. 3 (140,000 kw), Cartagena, Spain, Hidroelectrica Espanola, S.A. for International General Electric Co.; Bari power plant, three units of 62,500 kw each, Societa Meridionale di Elettricita, for Ansaldo, S.A., Genoa, Italy; Project A, Edisonvolta, Milan, Italy; Leon Creek 100,000-kw Unit No. 4, City Public Service Board, San Antonio, Texas.

1951-1955 - Assistant Engineer, Gibbs & Hill, Inc. Assistance in specifications, bid analysis, and recommendations for purchase for steam power plants, Savannah River Project, U.S. Atomic Energy Commission.

1949-1951 - Mechanical Designer, Gibbs & Hill, Inc. Assistance in specifications, bid analysis and control-system design, and in charge of design drawings, control systems and instrumentation, Genoa power plant, Societa Edison, Milan, Italy.

1949 - Mechanical Designer, Sanderson & Porter, Inc., New York, New York. Design of brine purifications and evaporation processes for the production of salt in the Ashtabula, Ohio sodium manufacturing plant, National Distillers Chemical Corp.

1947-1949 - Mechanical Designer, Gibbs & Hill, Inc. Mechanical arrangement and design of piping: Narrows power plant, The Virginian Railway Co.; and Harnes power plant, French Supply Council.

1939-1947 - Senior Marine Draftsman, Gibbs & Cox, Inc., New York, New York. Design and calculations for ventilating system, rudders, steering gear and hoisting equipment for U.S. Navy vessels and for the "United States" of the U.S. Lines. (1944-1946-U.S. Navy.)

KENNETH L. SCHEPPELE, P.E.

Chief Structural Engineer

GIBBS & HILL, Inc.

1949	•	Carnegie Institute of Technology - B.S., Civil Engineering.
1954	•	Polytechnic Institute of Brooklyn - M.S. Civil Engineering.
1963-1964	•	Stevens Institute of Technology - Mathematics.
1968-Date	•	Chief Structural Engineer, Gibbs & Hill, Inc., New York, New York. In charge of all structural engineering of the Company.
1967	•	Assistant Chief Structural Engineer, Gibbs & Hill, Inc. Assistance to the Chief Structural Engineer on studies, engineering and design projects of the Company.
1965-1967	•	Supervising Engineer - Structural, Gibbs & Hill, Inc. Supervision of structural engineering and design, nuclear power plant projects of the Company: Zorita Station, 160,000-kwe, Spain; 450,000-kwe nuclear power station, Ft. Calhoun, Nebraska, Omaha Public Power District.
1962-1965	•	Engineer - Structural, Gibbs & Hill, Inc. Supervision of structural design: Project EF, 272,000-ekw nuclear project EF, Societa Elettronucleare Italiana Unit No. 3, 200,000 kw, Shen Ao Station, Taiwan Power Co. Preparation of structural requirements, 300,000-kwe nuclear power plant, Santa Maria de Garona, Spain, Nuclenor. Economic study, total containment vs pressure suppression, for a hypothetical 70,000-kwe nuclear power plant, Westinghouse Electric Co. Preliminary design, estimates and proposal documents, nuclear power plants including 160,000-kwe Zorita Station, Spain, and three others.
1960-1961	•	Assistant Engineer - Structural, Gibbs & Hill, Inc. Supervision of structural design: Project EF, SELNI; Phase III, Princeton-Pennsylvania Accelerator, Princeton, New Jersey; Chandrapura 140,000-kw thermal power plant, Damodar Valley Corp., Calcutta, India.
1956-1959	-	Assistant Design Engineer - Structural, Gibbs & Hill, Inc., Supervision of structural design: Phase I and II, Princeton-Pennsylvania Accelerator; Escombreras Units Nos. 1 and 2 (70,000 kw each) and Unit No. 3 (140,000 kw), Cartagena, Spain, International General Electric Co. Assisted in structural review of City Waterfront Development, Panama City, Florida, B.O. Vannort Co. Structural estimate of proposed greater Buenos Aires Generating station, Buenos Aires, Argentina, for Westinghouse Electric International Co. Assisted Supervision of structural design: waterfront structures, E.W. Stout 100,000-kw Unit No. 5, Indianapolis Power & Light Co., Indianapolis, Indiana; facilities for testing atomic submarine reactors, Knolls Atomic Power Laboratory, West Milton, New York.
1951-1956	-	Structural Designer, Gibbs & Hill, Inc. Assisted structural design: Escombreras plant, Cartagena, Spain, H.T. Pritchard Station, Indianapolis Power & Light Co.; monorail project, San Francisco, California; Deepwater plant, Atlantic City Electric Co.; Savannah River power plant, U.S. Atomic Energy Commission; Fairless Works power plant, United States Steel Corp.
1949-1951	-	Structural Designer, Ebasco Services, Inc., New York, New York. Assisted with the structural design of steam electric power plants for Mid-South Utilities, Inc.
1948	-	Draftsman, Pittsburgh Limestone Co., New Castle, Pennsylvania (Summer).
1947	-	Highway Construction Inspector, Pennsylvania Department of Highways, Franklin, Pennsylvania (Summer).
1944-1946	-	Private to First Lieutenant, Corps of Engineers, United States Army. Supervised air field and road construction in South Pacific.

WILLIAM W. BUDDE, R. A.

Chief Architect

GIBBS & HILL, Inc.

1926-1929	-	Columbia University evening school - Architecture.
1930-1931	-	New York University evening school - Architecture.
1938-1939	-	Pratt Institute evening school - received certificate.
1958-Date	-	Chief Architect, Gibbs & Hill, Inc., New York, New York. In charge of architectural services on all domestic and foreign projects, including power plants, industrial and commercial buildings, banks, nuclear plants and facilities associated with the housing and operation of accelerators.
1956-1957	-	Supervising Architect, Gibbs & Hill, Inc. Supervision, designs and working drawings for power plants, industrial buildings, and waste treatment plants.
1945-1956	-	Architect, Gibbs & Hill, Inc. Preparation of designs and working drawings for power plants, industrial buildings, sewage treatment plants.
1943-1945	-	Architect-Engineer, Kellex Corp., New York, New York. Oak Ridge, Tenessee, project.
1942-1943	-	Assistant Architect, Gibbs & Hill, Inc. Preparation of designs and working drawings for power plants.
1941-1942	-	Designer, Caribbean Architect-Engineer, New York, New York. Design and working drawings for U. S. Army bases, Trinidad.
1939-1941	-	Assistant Architect, Board of Education, Bureau of Construction, Brooklyn, New York. Preparation of designs and working drawings for New York City Public Schools.
1937-1939	-	Designer, Walter Dorwing Teague, New York, New York. Preparation, designing and sketches for exhibit buildings and exhibits, New York World's Fair and San Francisco Exposition.
1936-1937	-	Assistant Architect, Procurement Division, U. S. Treasury Department, Washington, D. C. Public buildings.
1935-1936	-	National Broadcasting Company, New York, New York.
1932-1935	-	Private practice and associated with Charles Johnson.
1929-1932	-	Senior Draftsman, LeRoy P. Ward, Inc., New York, New York.
1928-1929	-	Senior Draftsman, Henry V. Murphy, Brooklyn, New York.

WILLIAM J. GRADY, P.E.

Construction Manager

GIBBS & HILL, Inc.

1930	• Manhattan College - B.S., Engineering
1931	• Manhattan College - Civil Engineer
1968-Date	• Construction Manager, Gibbs & Hill, Inc., New York, New York. In charge of first-hand construction activities of the Company and of resident engineering forces.
1968	• Construction Manager, Batelle Engineering, Richland, Washington. In charge of construction activities of the company at Hanford Works, U.S. Atomic Energy Commission.
1963-1968	• Vice President, Burns and Roe Construction Corporation, and Resident Manager of Construction, Burns and Roe, Inc., Oradell, New Jersey. Resident manager during construction of the Hanford nuclear generating station, Washington Public Power System.
1961-1963	• Construction Manager, Burns and Roe Construction Corporation. Construction management: communications project in Spain, U.S. Navy; several construction projects in the United States.
1959-1961	• Project Manager, Burns and Roe, Inc. Planning, design, construction and technical administration, 17 tracking stations around the world for Project Mercury.
1958-1959	• Manager of Construction, Burns and Roe, Inc. In charge of construction activities: home office administration and field construction and resident engineering forces.
1955-1957	• Project Manager, Burns and Roe, Inc. Planning and coordination of construction and installation, including direction of subcontract negotiations, project security, safety of plant and personnel and labor relations, Shippingport nuclear power plant.
1948-1955	• Assistant Manager of Construction, Burns and Roe, Inc. Home office-field liaison, construction and resident engineering activities of the company.
1946-1948	• Construction Engineer, Burns and Roe, Inc. Field and office engineering, construction and resident engineering activities of the company.
1944-1946	• Lieutenant, U.S. Navy. In charge of the Ship Salvage Division, Okinawa and Tokyo.
1941-1944	• Construction Engineer, Burns and Roe, Inc. Field and office engineering, construction and resident engineering activities of the company.

PERUSAHAAN UMUM LISTRIK NEGARA

SEMARANG STEAM POWER PLANT

SPECIFICATIONS AND DOCUMENTS
FOR
CONTROL AND INSTRUMENT EQUIPMENT

SPECIFICATION 6104 - K-2A

ADDENDUM 1
November 14, 1973

Each bidder shall note these revisions to the specifications and documents and incorporate these revisions in his proposal. Each bidder shall attach a signed acknowledged copy of this entire addendum in the front of the specifications and documents submitted with his proposal.

This addendum consists of eight pages and revised Pages C-2, C-3, CV-17, 1EM-4, and 2EM-4.

1. Page A-1. In the third line of the fifth paragraph, change the last word from "disqualification" to "rejection".

2. Page A-1. Add the words "and documents" following the word "specifications" in the first line of the last paragraph.

3. Page A-2. Delete the first paragraph and insert in its place the following revised paragraph:

   "Copies of the specifications and documents obtained in the United States require a deposit of $10.00; those obtained in Indonesia require a deposit of Rp 4,000. Deposits will not be refunded."

4. Page A-2. Add the words "and documents" following the word "specifications" in the second paragraph.

   Add the words "and documents" following the word "specifications" in the second sentence of the fourth paragraph.

5. Page A-2. In the second line of the fifth paragraph, delete the word "within" and substitute the phrase "for a period of".

6. Page A-2. Revise the first sentence of the last paragraph to read:

"The Perusahaan Umum Listrik Negara reserves the right to accept the proposal which, in its judgment, is the lowest responsive proposal submitted by a qualified bidder."

7. Page B-3, Article B.4.1. Revise the second paragraph to read as follows:

"The bidder shall not alter any part of these specifications and documents in any way."

8. Page B-4, Article B.4.3. Change the spelling of the name of the Owner's Director of Construction to read:

"Ir. Bagoes Moedijantoro"

9. Page B-5, Article B.4.4. Delete the second paragraph and insert the following:

"Unless otherwise specified, proposals shall be for the complete scope of the work specified in these specifications and documents. Proposals for individual components of the work will be considered only to the extent such partial scope of supply is specifically stipulated in the INVITATION TO BIDDERS and the PROPOSAL sections included as a part of these specifications and documents."

10. Page B-5, Article B.4.5. In the last line of this article, change the phrase "within 150 days" to read "for a period of 100 days".

11. Page B-5, Article B.6. In the third paragraph, sixth line, change "150 days" to read "100 days".

12. Page B-7, Article B.13. Revise the first sentence in the first paragraph to read:

"The Owner reserves the right to accept the proposal which, in its judgment, is the lowest responsive proposal submitted by a qualified bidder."

13. Page B-8, Article B.15. Delete this article in its entirety and insert the following:

"B.15 EVALUATION. Proposals will be evaluated on the basis of the fas lump sum price bid of equipment and materials as specified.

The delivery dates stipulated in Article 1A.6 must be met by the successful bidder and must be acknowledged in the proposal submitted."

14. Page C-2. Delete entire page and replace with revised Page C-2 attached to this addendum.

15. Page C-3. Delete entire page and replace with revised Page C-3 attached to this addendum.

16. Page GC-3, Article GC.2. Delete Subarticle 15 at top of page in its entirety.

17. Page GC-4, Article GC.7. Delete entire article and replace with the following revised article:

"GC.7 ASSIGNMENT AND SUBCONTRACTING. The Contractor shall not assign or subcontract the work, or any part thereof, without the previous written consent of the Owner, Engineer, and AID, nor shall he assign, by power of attorney or otherwise, any of the money payable under this Contract unless written consent of the Owner has been obtained. No right under this Contract, nor claim for any money due or to become due hereunder shall be asserted against the Owner, or persons acting for the Owner, by reason of any so-called assignment of this Contract or any part thereof, unless such assignment has been authorized by the written consent of the Owner and AID. In case the Contractor is permitted to assign moneys due or to become due under this Contract, the instrument of assignment shall contain a clause subordinating the claim of the assignee to all prior liens for services rendered or materials supplied for the performance of the work.

Should any subcontractor fail to perform in a satisfactory manner the work undertaken by him, his subcontract shall be immediately terminated by the Contractor upon notice from the Owner. The Contractor shall be as fully responsible and accountable to the Owner for the acts and omissions of his subcontractors, and of persons either directly or indirectly employed by them, as he is for the acts and omissions of persons directly employed by him. Nothing contained in this Contract shall create any contractual relation between any subcontractor and the Owner."

18. Page GC-5, Article GC.8. Delete this article in its entirety and substitute the following:

"GC.8 ORAL AND WRITTEN STATEMENTS. It is understood and agreed that the written terms and provisions of this Contract shall supersede all oral and written statements made by either party to this Contract prior to entering into contract. Written statements made by either party prior to entering into contract and oral statements shall not be effective or be construed as being a part of this Contract."

19. Page GC-6, Article GC.11. Delete the first paragraph at the top of this page.

20. Page GC-6, Article GC.12. In the third paragraph, second line, delete the word "perfor" and substitute the word "perform".

21. Page GC-6, Article GC.13. Revise the sixth and seventh lines of this article to read:

"Contractor or any of his property; or if at any time the work under this Contract"

22. Page GC-7, Article GC.16. Delete this article in its entirety and substitute the following revised article

"GC.16 FORCE MAJEURE. The term force majeure, as used in these contract documents shall mean any cause beyond the control of the Contractor, and which the Contractor could not foresee and/or reasonably provide against and which prevents the Contractor from wholly or partly performing any duties under the contract.

Force majeure shall include, but is not limited to, any of the following:

a. War, revolution, insurrection or hostilities (whether declared or not)

b. Riot, civil commotion or civil uprising (other than among the Contractor's employees)

c. Earthquake, flood, tempest, hurricane, lightning or other natural disaster

d. Any fire of major proportions, or explosion

e. Epidemic

f. Strike, lockout or other industrial disturbance

If there occurs an event constituting force majeure, the Contractor shall give written notice of the occurrence to the Owner within 15 days of the occurrence or as soon thereafter as is practicable, including a statement describing the effect of such occurrence upon the performance of this agreement.

In the event of a force majeure, the Contractor unless otherwise directed by the Owner in writing shall continue to undertake and perform the duties included in this Contract as far as is reasonably practicable. If prevented from so performing by such cause, the performance may be suspended during the continuance of such inability but for no longer period and such inability shall be removed if practicable with all reasonable dispatch.

In the event of a force majeure resulting in a suspension of work this Contract shall be extended by a period equal to that for which the Contractor was prevented from performing.

If such event lasts for more than 45 days after notice has been given to the Owner in writing, either party to this Contract may terminate this Contract and the Contractor shall thereupon be entitled to any sums which would be payable pursuant to the termination provision of this Contract."

23. Page GC-8, Article GC.17. In the sixth line of this article, delete the phrase "interest on investment".

24. Page GC-9, Article GC.19.1. In the third line of the second paragraph, delete the word "either".

In the fourth line of the second paragraph, delete the words "an action in court".

In the second and third paragraphs, wherever the phrase "Owner or Engineer" appears, change the phrase to "Owner and Engineer". (5 places)

25. Page GC-12, Article GC.23. Delete the last sentence of the first paragraph.

26. Page GC-13, Article GC.25. Add the following sentence to the first paragraph:

"Labor costs involved in carrying out such work shall be borne by the Contractor."

27. Page GC-22, Article GC.32.3. In the first paragraph, delete the phrase "except as provided for under the AID Capital Projects Guidelines M.O. 1442.2 and M.O. 1442.3".

Delete the third paragraph in this article.

28. Page GC-24, Article GC.33. Revise the first sentence in this article to read:

"Unless otherwise specified the Contractor shall begin the work under this Contract within 10 days after receipt of a notice to proceed from the Owner to be followed by the establishment of an irrevocable Letter of Credit in a mutually acceptable USA bank for the USA Dollar value of this Contract."

29. Page GC-30, Article GC.44. In the next to last paragraph on this page, insert the words "Contractor and the" between the words "The expatriate" in the first line.

In the ninth line of the next to last paragraph on this page, insert the words "Contractor and its" between the words "The expatriate".

30. Page GC-31, Article GC.49.1. Revise "South Yemen" to read "Yemen (Adan)".

31. Page 1A-2, Article 1A.6. Change the second line of the first paragraph to read:

"of the equipment and materials to assure delivery at the end of ships tackle at the Port of Semarang"

32. Page 1B-5, Article 1B.15. Revise the last line of this article to read as follows:

"paragraphs and at a range of ambient temperatures up to 50 C."

33. Page 1B-8, Article 1B.25. Delete the second paragraph on this page and insert the following revised paragraph:

"Unless otherwise specified, all pressure and temperature instruments shall have metric scales. Scales shall be in kilograms per square centimeter for pressure instruments and in degrees centigrade for temperature instruments."

34. Page 1C-3, Article 1C.4.2. Under item "a. Preliminary issue within 60 days and certified issue within 120 days:", add the following item:

"Instrument data sheets for all panel mounted devices, local transmitters, control drives, analyzers, control valves, flow elements, and temperature detectors"

35. Page 2B-1, Article 2B.3.2. In the first paragraph delete the second sentence which begins: "Selector stations shall be..".

36. Page 2C-8, Article 2C.4.4. Change last sentence to read: "Integrators shall be Foxboro, or acceptable equal."

37. Page 2C-9, Article 2C.5. Change first paragraph to read:

"The recorder shall be provided with all required plug-in type cables and input relay racks. A total length of twenty-five feet of cable shall be furnished to interconnect the monitor and its associated input relay racks."

38. Page 2C-9, Article 2C.5. Change next to last paragraph to read:

"24 - Alarm modules for continuous monitoring and alarm of preselected temperatures. The alarm modules shall be as specified in Article 1B.25.3. The alarm modules shall be located adjacent to the temperature monitor input relay racks."

39. Page 2C-12, Article 2C.9. Add to the end of the last sentence "..all mounted and piped within the Main Control Panel."

40. Page 2D-4, Article 2D.5. Delete the phrase "current ratio will be furnished later." in the last two lines and add the following: "Watthour meter shall be primary reading with 5 dial registers. Current transformer ratios, potential transformer ratios, and dial multipliers will be furnished later."

41. Page 1EM-4. Delete entire page and replace with revised Page 1EM-4 attached to this addendum. (NOTE: the new items shall be mounted and wired on the rear of the panel.)

42. Page 2EM-4. Delete entire page and replace with revised Page 2EM-4 attached to this addendum. (NOTE: the new items shall be mounted and wired on the rear of the panel.)

43. Page CV-17. Delete entire page and replace with revised Page CV-17 attached to this addendum.

44. Page CV-24. On the specification sheet for control valves CRV-123 and 223, under Accessories, Positioner change "YES" to "NO" and under REMARKS, add the statement:

    "Level controllers shall be differential gap type with a 12 inch permissible gap adjustment."

45. Page CV-25. On the specification sheet for control valves CRV-124 and CRV-224, under Valve Construction, Body Ends delete "BW SCH 40" and substitute "150# FLGD".

46. Page CV-26. On the specification sheet for control valves CRV-125 and CRV-225, under Valve Construction, Body Ends delete "BW SCH 40" and substitute "150# FLGD".

BLACK & VEATCH INTERNATIONAL
Consulting Engineers

* * * * * * * * * * * * * *

ACKNOWLEDGMENT

The undersigned bidder hereby certifies that the revisions set forth in this addendum have been incorporated in his bid and are a part of the specifications and documents.

Signed _____

_____

Date _____

C.2 **FREIGHT**

Estimated lump sum price of ocean freight including port charges for handling, loading, and unloading onto barge; insurance; and port surcharge for shipping all equipment and materials furnished under C.1 above from USA port to Port of Semarang, Indonesia:

_____

_____ Dollars ($ USA)
(Price in Words)

C.3 MANUFACTURER'S FIELD SERVICES

If required by the Owner, manufacturer's technical field services specified in Section 1A will be furnished at the following rates.

C.3.1 Representative's Daily Service Rate

Service rate for each technical field representative exclusive of living costs, expenses and transportation, and on the basis of six 8-hour days per week on the site:

_____

_____ Dollars ($ USA)
(Price in Words)

C.3.2 Overtime Rate

Service representative's time in excess of 48 hours per week will be provided at the following hourly rate:

_____ _____

_____ Dollars ($ USA)
(Price in Words)

C.3.3 Expenses

Living costs and other expenses incurred in Indonesia will be invoiced at cost but will not exceed the following per diem:

_____

_____ Rupiahs (Rp IND)
(Price in Words)

C.3.4 Transportation

Estimated cost per round trip from the bidder's office to Semarang, Central Java, Indonesia and return, including living costs and other expenses incidental to travel, but excluding per diem salary cost:

_____

_____ Dollars($ USA)
(Price in Words)

and

_____

_____ Rupiahs(Rp IND)
(Price in Words)

The rupiah to dollars conversion rate is 415 Indonesian Rupiahs per USA Dollar.

The undersigned hereby declares that only the persons or firms interested in the Proposal as principal or principals are named herein, and that no other person or firms than herein mentioned have any interest in this Proposal or in the contract to be entered into; that this Proposal is made without connection with any other person, company, or parties likewise submitting a proposal; and that it is in all respects for and in good faith, without collusion or fraud.

If this Proposal is accepted, the undersigned bidder agrees to submit engineering data, provide services, and complete delivery of the equipment and materials in accordance with the schedules stipulated in the specifications. The undersigned fully understands that adherence to the schedules stipulated is of the essence of the contract.

If this Proposal is accepted, the undersigned hereby agrees to enter into a contract on the attached forms within 45 calendar days from the date of notice by the Owner of award of contract and to furnish a Performance Bond satisfactory to the Owner.

Dated at _____ this ____ day of _____, 19__.

Bidder _____

By _____

Title _____

Business Address of Bidder _____

_____

State of Incorporation _____

Address of Principal Office _____

_____

VALVE DESCRIPTION 2FD-5

Flow Diagram 1FD-5 Number Required 4 Valve Tag CRV-113, CRV-212, CRV-112, CRV-213

Service BOILER FEEDWATER REGULATOR

Fluid CONDENSATE Sp Gr ____ Viscosity ____ ssu @ ____ F

VALVE DESIGN

	Design	Low
Flow Rate	525,000 #/HR	110,000 #/HR
Inlet Pressure	1680 PSI	2010 PSI
Inlet Temperature	329 F	230 F
Outlet Pressure	1620 PSI	1280 PSI
Percent Travel		
Preferred	90%	
Predicted		

Inner Valve Type SINGLE PORT BALANCED - EQUAL PERCENTAGE

Maximum Differential Pressure 2225 Maximum Temperature 340 F

VALVE CONSTRUCTION

Body Type GLOBE
Body Pressure Class 1500 LB
Body Material STEEL
Body Ends BW SCH 120
Preferred Body Size 6" (SEE REMARKS)
Guide Location CAGED
Cooling Fins NO

Materials:

Plug STELLITE
Seat Ring STELLITE
Guide Posts STELLITE
Bushings
Stem STAINLESS STEEL
Packing TFE - CHEVRON RINGS

VALVE OPERATOR

Type PISTON OR DIAPHRAGM
Signal Range AS REQ'D
Valve Action:
Flow OPENS
Spring CLOSES
Signal Increase

Accessories:

Positioner YES
Limit Switch NO
Handjack YES
Stops NO
Air Lock NO

PRESSURE CONTROLLER

Type
Adjustable Range
Maximum Pressure
Mounting
Signal Range
Reset or Rate

TEMPERATURE CONTROLLER

Type
Adjustable Range
Maximum Press. and Temp.
Mounting
Capillary Length
Pipe Connection
Reset or Rate

LEVEL CONTROLLER

Type
Adjustable Range
Cage Connections
Pressure Class
Signal Range
Cooling Fins
Gauge Glasses
Reset or Rate

REMARKS RECEIVES SIGNAL FROM FEEDWATER CONTROL SYSTEM.
VALVE ENDS SHALL BE 6 INCH TO MATE WITH 6 INCH SCH 120 PIPE.

P-GN-009-8

BLACK & VEATCH INTERNATIONAL
CONSULTING ENGINEERS
KANSAS CITY, MO.

PERUSAHAAN UMUM LISTRIK NEGARA
AGENCY OF MINISTRY OF PUBLIC WORKS AND POWER
GOVERNMENT OF REPUBLIC OF INDONESIA
SEMARANG STEAM POWER PLANT
100 (2X50) MW UNITS 1 & 2

CONTROL VALVE
SPECIFICATION SHEET

PROJECT 6104

SHEET CV-17

REVISION 1

ITEM NO. 1CP-	DESCRIPTION	NAME PLATE	MANUFACTURER TYPE MODEL	INPUT SIGNAL RANGE / SCALE RANGE	SIGNAL CONVERTER TAG NO.	REMARKS	PURCHASE SPEC NUMBER
71	PRINTING DEMAND METER	YES	GE PD-57F	LATER			K-2A
72	TOTALIZER	YES	GE SST-3	LATER			K-2A
73	CONDENSATE PUMP 1A	YES		LATER			K-2A
74	CONDENSATE PUMP 1B	YES		LATER			K-2A
75	4160 VOLT SWGR WATTS (MAIN)	YES		LATER			K-2A
76	4160 VOLT SWGR WATTS (RES)	YES		LATER			K-2A
77	4160 VOLT SWGR WATTHOURS (MAIN)	YES		LATER			K-2A

DATE	REVISION OR ISSUE	NO.	BY
11/12/73	ADDENDUM 1	1	[illegible]

BLACK & VEATCH INTERNATIONAL
CONSULTING ENGINEERS
KANSAS CITY, MO.

PERUSAHAAN UMUM LISTRIK NEGARA
AGENCY OF MINISTRY OF PUBLIC WORKS AND POWER
GOVERNMENT OF REPUBLIC OF INDONESIA
SEMARANG STEAM POWER PLANT
100 (2X50) MW UNITS 1 & 2

INSTRUMENT LIST
ELECTRIC METERS

PROJECT 6104

SHEET 1EM-4

P-01-024B

ITEM NO. 2CP-	DESCRIPTION	NAME PLATE	MANUFACTURER TYPE MODEL	INPUT SIGNAL RANGE / SCALE RANGE	SIGNAL CONVERTER TAG NO.	REMARKS	PURCHASE SPEC NUMBER
71	NOT USED						
72	NOT USED						
73	CONDENSATE PUMP 2A	YES		LATER			K-2A
74	CONDENSATE PUMP 2B	YES		LATER			K-2A
75	4160 VOLT SWGR WATTS (MAIN)	YES		LATER			K-2A
76	4160 VOLT SWGR WATTS (RES)	YES		LATER			K-2A
77	4160 VOLT SWGR WATTHOURS (MAIN)	YES		LATER			K-2A

DATE	REVISION OR ISSUE	NO.	BY
4/12/83	ADDENDUM 1	1	JMM

BLACK & VEATCH INTERNATIONAL
CONSULTING ENGINEERS
KANSAS CITY, MO.

PERUSAHAAN UMUM LISTRIK NEGARA
AGENCY OF MINISTRY OF PUBLIC WORKS AND POWER
GOVERNMENT OF REPUBLIC OF INDONESIA
SEMARANG STEAM POWER PLANT
100 (2X50) MW UNITS 1 & 2

INSTRUMENT LIST
ELECTRIC METERS

PROJECT 6104

SHEET 2EM-4

PERUSAHAAN UMUM LISTRIK NEGARA

SEMARANG STEAM POWER PLANT

SPECIFICATIONS AND DOCUMENTS
FOR
HEAT EXCHANGERS

SPECIFICATION 6104 - M-12B

ADDENDUM 1
November 14, 1973

Each bidder shall note these revisions to the specifications and documents and incorporate these revisions in his proposal. Each bidder shall attach a signed acknowledged copy of this entire addendum in the front of the specifications and documents submitted with his proposal.

This addendum consists of nine pages and revised Pages C-1, C-2, C-3, D-18, and D-21.

1. Page A-1. In the third line of the fifth paragraph, change the last word from "disqualification" to "rejection".

2. Page A-1. Add the words "and documents" following the word "specifications" in the first line of the last paragraph.

3. Page A-2. Delete the first paragraph and insert in its place the following revised paragraph:

   "Copies of the specifications and documents obtained in the United States require a deposit of $5.00; those obtained in Indonesia require a deposit of Rp 2,000. Deposits will not be refunded."

4. Page A-2. Add the words "and documents" following the word "specifications" in the second paragraph.

   Add the words "and documents" following the word "specifications" in the second sentence of the fourth paragraph.

5. Page A-2. In the second line of the fifth paragraph, delete the word "within" and substitute the phrase "for a period of".

6. Page A-2. Revise the first sentence of the last paragraph to read:

"The Perusahaan Umum Listrik Negara reserves the right to accept the proposal which, in its judgment, is the lowest responsive proposal submitted by a qualified bidder."

7. Page B-3, Article B.4.1. Revise the second paragraph to read as follows:

"The bidder shall not alter any part of these specifications and documents in any way."

8. Page B-4, Article B.4.3. Change the spelling of the name of the Owner's Director of Construction to read:

"Ir. Bagoes Moedijantoro"

9. Page B-5, Article B.4.4. Delete the second paragraph and insert the following:

"Unless otherwise specified, proposals shall be for the complete scope of the work specified in these specifications and documents. Proposals for individual components of the work will be considered only to the extent such partial scope of supply is specifically stipulated in the INVITATION TO BIDDERS and the PROPOSAL sections included as a part of these specifications and documents."

10. Page B-5, Article B.4.5. In the last line of this article, change the phrase "within 150 days" to read "for a period of 100 days".

11. Page B-5, Article B.6. In the third paragraph, sixth line, change "150 days" to read "100 days".

12. Page B-7, Article B.13. Revise the first sentence in the first paragraph to read:

"The Owner reserves the right to accept the proposal which, in its judgment, is the lowest responsive proposal submitted by a qualified bidder."

13. Page B-8, Article B.15. Delete this article in its entirety and insert the following:

"B.15 EVALUATION. Proposals will be evaluated on the basis of the fas lump sum price bid for each of the two categories of equipment and materials independently as specified.

The delivery date stipulated in Article 1A.6 must be met by the successful bidder and must be acknowledged in the proposal submitted."

14. Page C-1. Delete entire page and replace with revised Page C-1 attached to this addendum.

15. Page C-2. Delete entire page and replace with revised Page C-2 attached to this addendum.

16. Page C-3. Delete entire page and replace with revised Page C-3 attached to this addendum.

17. Page D-5, Article D.4. Add the following paragraph at the end of the article:

"The bidder shall submit a list of recommended spare parts needed for a three year period of operation and estimated total FAS cost, plus estimated freight charges. The successful bidder only will be required to submit a complete listing with individual prices."

18. Pages D-18 and D-21. Delete these pages in their entirety and replace with revised Pages D-18 and D-21 attached to this addendum.

19. Page GC-3, Article GC.2. Delete Subarticle 15 at top of page in its entirety.

20. Page GC-4, Article GC.7. Delete entire article and replace with the following revised article:

"GC.7 ASSIGNMENT AND SUBCONTRACTING. The Contractor shall not assign or subcontract the work, or any part thereof, without the previous written consent of the Owner, Engineer, and AID, nor shall he assign, by power of attorney or otherwise, any of the money payable under this Contract unless written consent of the Owner has been obtained. No right under this Contract, nor claim for any money due or to become due hereunder shall be asserted against the Owner, or persons acting for the Owner, by reason of any so-called assignment of this Contract or any part thereof, unless such assignment has been authorized by the written consent of the Owner and AID. In case the Contractor is permitted to assign moneys due or to become due under this Contract, the instrument of assignment shall contain a clause subordinating the claim of the assignee to all prior liens for services rendered or materials supplied for the performance of the work.

Should any subcontractor fail to perform in a satisfactory manner the work undertaken by him, his subcontract shall be immediately terminated by the Contractor upon notice from the Owner. The Contractor shall be as fully responsible and accountable to the Owner for the acts and omissions of his subcontractors, and of persons either directly or indirectly employed by them, as he is for the acts and omissions of persons directly employed by him. Nothing contained in this Contract shall create any contractual relation between any subcontractor and the Owner."

21. Page GC-5, Article GC.8. Delete this article in its entirety and substitute the following:

"GC.8 ORAL AND WRITTEN STATEMENTS. It is understood and agreed that the written terms and provisions of this Contract shall supersede all oral and written statements made by either party to this Contract prior to entering into contract. Written statements made by either party prior to entering into contract and oral statements shall not be effective or be construed as being a part of this Contract."

22. Page GC-6, Article GC.11. Delete the first paragraph at the top of this page.

23. Page GC-6, Article GC.12. In the third paragraph, second line, delete the word "perfor" and substitute the word "perform".

24. Page GC-6, Article GC.13. Revise the sixth and seventh lines of this article to read:

"Contractor or any of his property; or if at any time the work under this Contract"

25. Page GC-7, Article GC.16. Delete this article in its entirety and substitute the following revised article:

"GC.16 FORCE MAJEURE. The term force majeure, as used in these contract documents shall mean any cause beyond the control of the Contractor, and which the Contractor could not foresee and/or reasonably provide against and which prevents the Contractor from wholly or partly performing any duties under the contract.

Force majeure shall include, but is not limited to, any of the following:

a. War, revolution, insurrection or hostilities (whether declared or not)

b. Riot, civil commotion or civil uprising (other than among the Contractor's employees)

c. Earthquake, flood, tempest, hurricane, lightning or other natural disaster

d. Any fire of major proportions, or explosion

e. Epidemic

f. Strike, lockout or other industrial disturbance

If there occurs an event constituting force majeure, the Contractor shall give written notice of the occurrence to the Owner within 15 days of the occurrence or as soon thereafter as is practicable, including a statement describing the effect of such occurrence upon the performance of this agreement.

In the event of a force majeure, the Contractor unless otherwise directed by the Owner in writing shall continue to undertake and perform the duties included in this Contract as far as is reasonably practicable. If prevented from so performing by such cause, the performance may be suspended during the continuance of such inability but for no longer period and such inability shall be removed if practicable with all reasonable dispatch.

In the event of a force majeure resulting in a suspension of work this Contract shall be extended by a period equal to that for which the Contractor was prevented from performing.

If such event lasts for more than 45 days after notice has been given to the Owner in writing, either party to this Contract may terminate this Contract and the Contractor shall thereupon be entitled to any sums which would be payable pursuant to the termination provision of this Contract."

26. Page GC-8, Article GC.17. In the sixth line of this article, delete the phrase "interest on investment".

27. Page GC-9, Article GC.19.1. In the third line of the second paragraph, delete the word "either".

In the fourth line of the second paragraph, delete the words "an action in court".

In the second and third paragraphs, wherever the phrase "Owner or Engineer" appears, change the phrase to "Owner and Engineer". (5 places)

28. Page GC-12, Article GC.23. Delete the last sentence of the first paragraph.

29. Page GC-13, Article GC.25. Add the following sentence to the first paragraph:

> "Labor costs involved in carrying out such work shall be borne by the Contractor."

30. Page GC-22, Article GC.32.3. In the first paragraph, delete the phrase "except as provided for under the AID Capital Projects Guidelines M.O. 1442.2 and M.O. 1442.3".

Delete the third paragraph in this article.

31. Page GC-24, Article GC.33. Revise the first sentence in this article to read:

> "Unless otherwise specified the Contractor shall begin the work under this Contract within 10 days after receipt of a notice to proceed from the Owner to be followed by the establishment of an irrevocable Letter of Credit in a mutually acceptable USA bank for the USA Dollar value of this Contract."

32. Page GC-30, Article GC.44. In the next to last paragraph on this page, insert the words "Contractor and the" between the words "The expatriate" in the first line.

In the ninth line of the next to last paragraph on this page, insert the words "Contractor and its" between the words "The expatriate".

33. Page GC-31, Article GC.49.1. Revise "South Yemen" to read "Yemen (Adan)".

34. Page 1A-3, Article 1A.6. Change the second line of the first paragraph to read:

"of the equipment and materials to assure delivery at the end of ships tackle at the Port of Semarang,"

35. Page 1B-5, Article 1B.15. Revise the last line of this article to read as follows:

"paragraphs and at a range of ambient temperatures up to 50 C."

36. Page 1B-8, Article 1B.25. Delete the second paragraph on this page and insert the following revised paragraph:

"Unless otherwise specified, all pressure and temperature instruments shall have metric scales. Scales shall be in kilograms per square centimeter for pressure instruments and in degrees centigrade for temperature instruments."

37. Page 1D1-3, Article 1D1.5.8. Change the last sentence to read:

"The ground lug size shall be in accordance with the following tabulation:

Full Load Motor Amperes	Minimum Ground Lug Range - AWG
0 thru 21	12 thru 10
22 thru 40	10 thru 8
41 thru 65	8 thru 6
66 thru 156	6 thru 4
157 thru 240	4 thru 2
241 thru 400	2 thru 1/0 "

38. Page 2A-10. Under DESIGN REQUIREMENTS, change the tube side design pressure from "1800" psi to read "2400" psi and change the tube side test pressure from "2700" psi to read "3600" psi.

39. Page 2A-11. Under DESIGN REQUIREMENTS, change the tube side design pressure from "1800" psi to read "2400" psi and change the tube side test pressure from "2700" psi to read "3600" psi.

40. Page 2D-4, Article 2D.8.1. After the second item in the design pressure listing, add the following:

"Brine heater shell side 135 psi"

41. Page 2D-5, Article 2D.8.2. Change the second item from the top of the page to read:

"Deaerator

If tray type	Type 304 stainless steel
If packed type	Polypropylene or acceptable equal"

42. Page 2D-6, Article 2D.9. Change the last line of the last paragraph to read:

"evaporator shell, but will be required for all tube bundles."

43. Page 2D-6, Article 2D.12. In the last line of the second paragraph, change the word "alloy" to read "material".

44. Page 2D-7, Article 2D.13.2. In the last line of this article, change the word "butt" to read "socket".

45. Page 2D-8, Article 2D.14. Change the first sentence of the first paragraph to read:

"All interior carbon steel surfaces, including baffles and supports shall be blast cleaned using steel grit."

46. Page 2E1-2, Article 2E1.2. Delete the first indented item at the top of the page which reads "Inlet feedwater.....".

Change the second line of the first paragraph after the listing to read "Subsection 2E4" instead of "Subsection 2G4".

In the second line of the next to the last paragraph, change the words "battery and 240 volt" to read "battery or 240 volt".

47. Pages 2E2-3 and 2E2-4, Article 2E2.8. Delete both paragraphs under this article and substitute the following:

"All interior carbon steel surfaces, including the baffles and supports shall be blast cleaned using steel grit. The blast cleaning shall be done prior to any interior drilling or fabrication. The protective coating shall be continually touched up during fabrication to provide the required protection. The protective coating shall be a water soluble rust preventive material that is acceptable to the Engineer.

After fabrication is completed and before shipment, the interior shall be cleaned and thoroughly dried, after which all connections and openings shall be adequately covered and sealed to prevent the entrance of dirt or moisture during ocean shipment and prior to erection."

BLACK & VEATCH INTERNATIONAL
Consulting Engineers

* * * * * * * * * * * * * *

ACKNOWLEDGMENT

The undersigned bidder hereby certifies that the revisions set forth in this addendum have been incorporated in his bid and are a part of the specifications and documents.

Signed _____

_____

Date _____

(PLN - 6104)
(HEAT EXCHANGERS - M-12B)
(ADDENDUM 1)
111473

PROPOSAL

To: Ir. Bagoes Moedijantoro, Director of Construction
PERUSAHAAN UMUM LISTRIK NEGARA
Jalan Sunan Ngampel 1
Kebajoran Baru, Jakarta, Indonesia

PROPOSAL FOR HEAT EXCHANGERS

Gentlemen:

The undersigned bidder having read and examined the specifications and associated contract documents for the above designated equipment which will be incorporated in the new Semarang Steam Power Plant does hereby propose to furnish the equipment and provide the services set forth in this Proposal.

All prices stated herein are firm and shall not be subject to escalation provided this Proposal is accepted within 100 days after the date of opening of the proposals.

The prices stated in USA Dollars include all USA taxes which might lawfully be assessed against the undersigned. All Indonesian taxes which might lawfully be assessed against the undersigned shall be for the account of the Owner in accordance with the provisions of Article GC.22.2 of the GENERAL CONDITIONS.

LUMP SUM PRICES

The undersigned bidder hereby proposes to furnish the feedwater heaters, deaerating heaters, and auxiliary cooling water heaters; and/or the flash evaporator, desalination plant, and package steam generator in accordance with the specifications and associated contract documents as defined in Article GC.1 of the GENERAL CONDITIONS for the following firm lump sum prices.

C.1 EQUIPMENT AND MATERIALS

Item 1. Lump sum price for furnishing eight feedwater heaters, two deaerating heaters, and four auxiliary cooling water heat exchangers fas USA port of shipment complete as specified:

_____

_____ Dollars ($ USA)
(Price in Words)

Item 2. Lump sum price for furnishing one flash evaporator, one desalination plant, and one package steam generator fas USA port of shipment complete as specified:

_____

_____ Dollars ($ USA)
(Price in Words)

C.2 FREIGHT

Item 1. Estimated lump sum price of ocean freight including port charges for handling, loading, and unloading onto barge; insurance; and port surcharge for shipping all equipment and materials furnished under C.1, Item 1 above from USA port to Port of Semarang, Indonesia:

_____

_____ Dollars ($ USA)
(Price in Words)

Item 2. Estimated lump sum price of ocean freight including port charges for handling, loading, and unloading onto barge; insurance; and port surcharge for shipping all equipment and materials furnished under C.1, Item 2, above from USA port to Port of Semarang, Indonesia:

_____

_____ Dollars ($ USA)
(Price in Words)

C.3 MANUFACTURER'S FIELD SERVICES

If required by the Owner, manufacturer's technical field services specified in Section 1A will be furnished at the following rates.

C.3.1 Representative's Daily Service Rate

Service rate for each technical field representative exclusive of living costs, expenses and transportation, and on the basis of six 8-hour days per week on the site:

_____

_____ Dollars ($ USA)
(Price in Words)

C.3.2 Overtime Rate

Service representative's time in excess of 48 hours per week will be provided at the following hourly rate:

_____

_____ Dollars ($ USA)
(Price in Words)

C.3.3 Expenses

Living costs and other expenses incurred in Indonesia will be invoiced at cost but will not exceed the following per diem:

_____

_____ Rupiahs (Rp IND)
(Price in Words)

C.3.4 Transportation

Estimated cost per round trip from the bidder's office to Semarang, Central Java, Indonesia and return, including living costs and other expenses incidental to travel, but excluding per diem salary cost:

_____

_____ Dollars ($ USA)
(Price in Words)

and

_____

_____ Rupiahs (Rp IND)
(Price in Words)

The rupiahs to dollar conversion rate is 415 Rupiahs per USA Dollar.

The undersigned hereby declares that only the persons or firms interested in the Proposal as principal or principals are named herein, and that no other persons or firms than herein mentioned have any interest in this Proposal or in the contract to be entered into; that this Proposal is made without connection with any other person, company, or parties likewise submitting a proposal; and that it is in all respects for and in good faith, without collusion or fraud.

Section 2D - FLASH EVAPORATOR

(Bidder's Name) _____

	Brine Heater	Vapor Condenser
Manufacturer and model number		
Effective tube surface, sq ft		
Ineffective tube surface, sq ft		
Total tube surface, sq ft		
Tubes		
Material		
Gage		
Active length, ft		
Number of tube passes		
Number of tubes		
Design heat transfer coefficient Btu/hr/sq ft/F		
Shell		
Material, ASTM number		
Thickness, in.		
Degasifier material		
Mist eliminator material, ASTM number		
Brine pump requirements (pump furnished under separate specifications)		
Flow, gpm		
TDH, excluding friction in Owner's brine piping, ft		
Available NPSH above Owner's supporting steel, ft		

(Trim Line)

(Bidder's Name)

	Brine Heater Tubes	Vapor Condenser Tubes	Brine Heater Shell
Model number			

Field assembly

Describe the amount of field assembly welding, bolting, accessory installation, piping, wiring and other field work to be done

(Trim Line)

4970204 (12)
PD-AAD-777

PERUSAHAAN UMUM LISTRIK NEGARA
AGENCY OF MINISTRY OF PUBLIC WORKS AND POWER
GOVERNMENT OF REPUBLIC OF INDONESIA
SEMARANG STEAM POWER PLANT UNITS 1 AND 2

LISTRIK NEGARA

257p.

AID LOAN 497-H-024

SPECIFICATIONS AND DOCUMENTS

CONTROL AND INSTRUMENT EQUIPMENT
SPECIFICATION 6104-K-2A

CONTRACT ISSUE

BAILEY METER COMPANY

29801 Euclid Avenue

Wickliffe, Ohio

BLACK & VEATCH INTERNATIONAL
consulting engineers
KANSAS CITY, MISSOURI, USA JAKARTA, INDONESIA

PERUSAHAAN UMUM LISTRIK NEGARA

SEMARANG STEAM POWER PLANT

SPECIFICATIONS AND DOCUMENTS
FOR
CONTROL AND INSTRUMENT EQUIPMENT

Specification K-2A

TABLE OF CONTENTS

		Page	through Page
I.	BIDDING REQUIREMENTS		
	Invitation to Bidders	A-1	A-2
	Instructions to Bidders	B-1	B-8
	Proposal	C-1	C-3
	Proposal Data	D-1	D-14
	Contractor's Proposal F54199		
	Equipment Description	3 pages	
	Outline Drawing	3 pages	
	Equipment List	24 pages	
	Contractor's Telex Dated 21 December 1973	1 page	
	Contractor's Letter Dated 17 January 1974	1 page	
	Contractor's Letter Dated 19 April 1974	1 page	
	Contractor's Letter Dated 6 May 1974	1 page	
	Bid Bond	E-1	E-2
II.	CONTRACT FORMS		
	Owner's Letter of Intent Dated 13 April 1974	1 page	
	Contract Agreement	CA-1	CA-3
	Basis of Contract Award	BA-1	
	Performance Bond	PB-1	PB-2
III.	CONTRACT REGULATIONS		
	General Conditions	GC-1	GC-32
IV.	SPECIFICATIONS		
	Part 1 - GENERAL REQUIREMENTS		
	Section		
	1A - General Description and Scope of the Work	1A-1	1A-4
	1B - General Equipment Specifications	1B-1	1B-17
	1C - Engineering Data	1C-1	1C-6

	Page	through Page
Part 2 - TECHNICAL REQUIREMENTS		
Section		
2A - Technical Requirements Applying to all System Equipment	2A-1	2A-2
2B - Control Systems	2B-1	2B-5
2C - Instruments	2C-1	2C-12
2D - Electrical Instruments and Accessories	2D-1	2D-4
2E - Panels and Enclosures	2E-1	2E-8
2F - Control Valves	2F-1	2F-8
INSTRUMENT LIST		
CONTROL VALVE LIST		
DRAWINGS		
APPENDIX		
Addendum 1 dated November 14, 1973	13 pages	
Addendum 2 dated November 26, 1973	5 pages	
Addendum 3 dated December 18, 1973	1 page	

INVITATION TO BIDDERS

CONTROL AND INSTRUMENT EQUIPMENT
FOR
SEMARANG STEAM POWER PLANT
PERUSAHAAN UMUM LISTRIK NEGARA

Sealed proposals will be received by Perusahaan Umum Listrik Negara (an agency of the Ministry of Public Works and Power of the Government of the Republic of Indonesia), at the office of the Director of Construction, Perusahaan Umum Listrik Negara, Jalan Sunan Ngampel 1, Kebajoran Baru,
X Jakarta, Indonesia until 11:00 a.m. Western Indonesia Time on ~~December 6, 1973~~ *January 5, 1974*
and then publicly opened for furnishing:

CONTROL AND INSTRUMENT EQUIPMENT

to be incorporated in the new 100 MW (2-50 MW units) Semarang Steam Power Plant, located in the port area of the City of Semarang, Java, Indonesia.

United States funds for the project will be furnished under United States Agency for International Development (AID) Loan 497-H-024.

It will be a condition of the proposal that all proposed equipment and materials shall have their source and origin in countries designated as eligible in United States AID Geographic Code 941.

Proposals will be considered only from qualified manufacturers, or authorized representatives of qualified manufacturers, who regularly manufacture equipment and materials of the type specified and who have built three or more units with similar design requirements, each with not less than three years of successful operating experience.

Bidders must submit data with their proposals to establish their qualifications for performing the work. Proposals not accompanied by this data
XX may be classified as nonresponsive and subject to ~~disqualification~~ *rejection*.

XXX Prospective bidders may examine and obtain copies of the specifications *and documents* at the following offices:

1. Black & Veatch International
   Jalan Sunan Ngampel 1
   Kebajoran Baru
   Jakarta, Indonesia

X Revised in accordance with Addendum 3.

XX Revised in accordance with Item 1 of Addendum 1.

XXX Revised in accordance with Item 2 of Addendum 1.

(PLN - 6104)
(CONTROL AND INSTRUMENT EQUIPMENT - K-2A)
101773

2. Black & Veatch International
1500 Meadow Lake Parkway
Kansas City, Missouri 64114 USA

X Each copy of the specifications delivered to prospective bidders will require a deposit. Deposits for the specifications will not be refunded.

All proposals must be made on the printed forms included in the specification.
XX and documents.

Seven duplicate copies of each proposal will be required, each copy being bound with a copy of the specifications and documents.

Each bidder will be required to furnish a bid bond in the amount of not less than 10 per cent of the total value of the bid. The bid bond shall be as stipulated in the Instructions to Bidders included with the speci-
XX fications/ and documents.

All proposals shall be firm and cannot be altered, withdrawn, or resubmitted
XXX within 100 days after the date set for opening of bids. All proposals shall be on a lump sum basis, and for all work specified. Bids on individual portions of the work will not be considered.

XXXX The Perusahaan Umum Listrik Negara reserves the right to accept the proposal which, in its judgment, is the lowest responsive proposal by a qualified bidder; to reject any and all proposals; and to waive minor irregularities in any proposal that is submitted. Any award, waiver of irregularities, or rejection of proposals shall be subject to AID approval. Proposals received after the specified time of closing will be returned unopened.

MINISTRY OF PUBLIC WORKS AND POWER
represented by
PERUSAHAAN UMUM LISTRIK NEGARA
Ir. Bagoes Moedijantoro,
Director of Construction

X Refer to Item 3 of Addendum 1.

XX Revised in accordance with Item 4 of Addendum 1.

XXX Refer to Item 5 of Addendum 1.

XXXX Refer to Item 6 of Addendum 1.

INSTRUCTIONS TO BIDDERS

B.1 GENERAL. Proposals are requested by the Perusahaan Umum Listrik Negara, an agency of the Ministry of Public Works and Power of the Government of the Republic of Indonesia, hereinafter referred to as the "Owner" for equipment, materials, and related work set forth in the attached specifications. All proposals shall be prepared and submitted in accordance with these instructions.

B.2 GENERAL PROJECT DESCRIPTION. The specified equipment and materials will be incorporated in the Owner's new Semarang Steam Power Plant. The plant will be located in the port area of the city of Semarang, Central Java, Indonesia. Initial plant construction will consist of two 50 MW oil fired steam electric generating units.

The dollar portion of the project will be financed by the United States Agency for International Development (AID) under Loan 497-H-024. The rupiah portion of the project will be financed by the Government of Indonesia.

B.3 BIDDER QUALIFICATIONS. In order for his proposal to be considered, the bidder must submit written evidence, satisfactory to the Owner, of his qualifications to satisfactorily perform the specified work. Qualification data shall be submitted with the proposal in a separate envelope clearly marked as follows:

QUALIFYING DATA

For _____
(Title of Work Proposed)

By _____
(Bidder's Name)

For

PERUSAHAAN UMUM LISTRIK NEGARA BID OPENING
FOR SEMARANG STEAM POWER PLANT

_____
(Date of Bid Opening)

The envelope of qualifying data shall be placed inside the envelope containing the proposal.

The bidder shall certify his qualifications by submitting evidence that he:

Is a qualified manufacturer, or authorized representative of a qualified manufacturer, who regularly manufactures equipment and materials of the type specified

Does not anticipate change in ownership or major policy during the period of the proposed work. If such change is anticipated the scope and effect thereof shall be defined.

Has adequate plant and manufacturing capacity available to do the work properly and expeditiously within the time period specified

Has, or can arrange for, adequate field service organization to provide technical services in Indonesia such as erection advisors or servicemen if such services are required by the specifications and associated documents

Has adequate financial status to meet the financial obligations incident to the work

Has no claims pending against him regarding the quality of performance of his work

Is a well established manufacturer having adequate technical knowledge and practical experience

Has designed and manufactured three or more units having similar design requirements, each of which has been in successful commercial operation for a period of not less than three years. The evidence shall consist of a selected listing of the units, indicating for each unit the owner's name, location, date of initial operation, and rating. The listing shall be specially prepared for this particular bidding and shall list only those units falling under the above requirements.

Has designed and manufactured equipment of the type proposed during the preceding two years

The bidder is advised that the above stated requirements are a minimum and that the Owner reserves the right to request the submittal of additional information.

The Owner reserves the right to reject the proposal of any bidder if, in the opinion of the Owner, the qualification data is incomplete or the bidder is not qualified to satisfactorily perform the work.

B.4 PROPOSALS. Seven copies of each proposal shall be prepared and submitted, each copy containing a complete bound copy of these contract documents. Proposals which are not prepared and submitted in accordance with these instructions may be rejected.

B.4.1 Preparation. Each proposal shall be carefully prepared using the proposal and data forms bound herewith. Entries on the proposal and data forms shall be typed, using dark black ribbon, or legibly written in black ink. All prices shall be stated in words and figures except where the forms provide for figures only. All proposals shall be in English.

X The bidder shall not alter any part of these specifications in any way.

The bidder shall staple or otherwise bind, with each bound copy of contract documents submitted, a signed copy of each addendum issued for these specifications during the bidding period. The bidder shall assemble all drawings, catalog data, and other supplementary information necessary to thoroughly describe materials and equipment covered by the proposal, and shall attach such supplemental information to the bound copy of these specifications submitted with the proposal. No such descriptive data will in any way be construed to be a part of or to modify in any way the bidder's proposal.

B.4.2 Signatures. Each bidder shall sign the proposal with his usual signature and shall give his full business address. The names of all persons signing should also be typed or printed below the signature.

Bids by partnerships shall be signed with the partnership name followed by the signature and designation of one of the partners or other authorized representative. A complete list of the partners shall be included with the proposal.

Bids by a corporation shall be signed in the official corporate name of the corporation, followed by the signature and designation of the president, secretary, or other person authorized to bind the corporation.

A bid by a person who affixes to his signature the word "president", "secretary", "agent", or other designation, without disclosing his principal, will be rejected. Satisfactory evidence of the authority of the officer signing in behalf of the corporation shall be furnished. Bidding corporations shall designate the state in which they are incorporated and the address of their principal office.

The bidder's name stated on the proposal shall be the exact legal name of the firm.

X Refer to Item 7 of Addendum 1.

B.4.3 Submittal. Proposals shall be submitted in sealed envelopes endorsed on the outside with the bidder's name and address and marked on the outside as follows:

PROPOSAL FOR _____ (Name of equipment)
SEMARANG STEAM POWER PLANT
TO BE OPENED 11:00 A.M. WESTERN INDONESIA
TIME IN JAKARTA, INDONESIA on
_____, 197_.
(Date of Opening)

The proposal along with supplementary information and qualification data shall be transmitted to the following:

The original and four copies to:

Perusahaan Umum Listrik Negara
Jalan Sunan Ngampel 1
Kebajoran Baru
Jakarta, Indonesia

X Attention: Ir. Bagoes Moedijantoro
Director of Construction

Two copies to:

Black & Veatch International
1500 Meadow Lake Parkway
Kansas City, Missouri USA 64114

Attention: Mr. L. J. Svoboda

Proposals may be submitted either by authorized local representatives or directly by qualified manufacturers. A single proprietary interest shall not submit multiple proposals for the same work even though the individual proposals are submitted under different names. The Owner reserves the right to reject proposals so submitted.

Proposals will be received up to the date and time specified in the INVITATION TO BIDDERS. Proposals received after that time will be returned to the sender unopened. It is the responsibility of the bidder to assure that his proposal is received by Perusahaan Umum Listrik Negara at their office prior to the time set for opening. Bidders shall send a cablegram to the Owner at the time their proposal is dispatched indicating that the proposal has been dispatched. The cablegram should be addressed to Ir. Bagoes Moedijantoro, Director of Construction, PLNPST, Jakarta, Indonesia.

X Revised in accordance with Item 8 of Addendum 1.

B.4.4 Firm and Complete Proposals. All prices stated in the Proposal of the successful bidder shall be firm throughout the duration of the contract without escalation.

X Proposals shall be for the complete scope of the work specified in these contract documents. Proposals for individual components of the work will not be considered.

B.4.5 Withdrawal. Proposals may be withdrawn, altered, and resubmitted at any time before the time set for opening the bids. Proposals may not be
XX withdrawn, altered, or resubmitted within 150 days thereafter.

B.5 INFORMATION TO BE SUBMITTED WITH PROPOSAL. Each bidder shall submit with his proposal the name of manufacturer and the type or model of each principal item of equipment or material he proposes to furnish. He shall also submit drawings and descriptive matter indicating general dimensions, principle of operation, and the materials from which the parts are made. Any bid not having sufficient descriptive matter to describe accurately the equipment or materials bid upon may be rejected as irregular. The drawings and descriptive matter submitted by the successful bidder will be retained by the Owner. Any material departure from these drawings and descriptive matter as submitted will not be permitted without written permission from the Owner.

Verbal statements made by the bidder at any time regarding quality, quantity or arrangement of equipment will not be considered.

If alternate equipment or materials are indicated in these specifications, the Bidder shall have the option of selecting any one of the alternates so indicated.

B.6 PROPOSAL GUARANTEE. Each proposal shall be accompanied by a proposal guarantee in an amount not less than 10 per cent of the total bid.

The proposal guarantee shall be made payable without condition, in USA Dollars to Perusahaan Umum Listrik Negara, and the amount thereof may be retained by said Perusahaan Umum Listrik Negara as liquidated damages if the bidder's proposal is accepted and the bidder fails to enter into contract in the form prescribed, with legally responsible surety, within 45 calendar days after the date he is awarded the contract.

The proposal guarantee of each unsuccessful bidder will be returned after award of contract or when his proposal is rejected. The proposal guarantee of the bidder to whom the contract is awarded will be returned when said bidder executes the contract and files a satisfactory Performance Bond. The proposal guarantee of the second lowest responsive bidder may be re-
XXX tained for a period not to exceed 150 days pending the execution of the contract and Performance Bond by the successful bidder.

X *Refer to Item 9 of Addendum 1.*

XX *Revised in accordance with Item 10 of Addendum 1.*

XXX *Refer to Item 11 of Addendum 1.*

The proposal guarantee shall be in the form of a bank draft, an irrevocable bank guarantee or an acceptable bidder's bond in the form included herein. The surety must be approved by the Owner and AID. Bank drafts or guarantees must be issued by a solvent USA bank meeting the criteria established by the USA Controller of Currency for guarantees issued by USA national banks. Bidder's bonds must be issued by companies authorized to do business in the bidder's state of incorporation and must meet the criteria established by the USA Treasury Department for acceptable sureties on U.S. Government bonds.

B.7 TAXES, PERMITS, AND LICENSES. The bidder's attention is directed to the provisions set forth in the GENERAL CONDITIONS under the article TAXES, PERMITS, AND LICENSES. Each bidder shall be responsible for determining the applicable taxes, permits, and licenses.

B.8 TIME SCHEDULE. The time schedule for performing the specified work will be a basic consideration of the Contract. The proposal shall be based upon submittal of drawings and engineering data in accordance with the requirements of Section 1C and performance of the work in accordance with the schedule specified in Section 1A. It will be necessary that the bidder satisfy the Owner of his ability to complete the work within the stipulated time. In this connection, attention is called to the provisions of the attached GENERAL CONDITIONS relative to delays and extensions of time.

B.9 LOCAL CONDITIONS. Each bidder is urged to thoroughly inform himself of all conditions and factors which would affect the prosecution and completion of the work.

It must be understood and agreed that such factors have been properly investigated and considered in the preparation of the proposal submitted. No claims for financial adjustment to any contract awarded for the work under these specifications and documents will be permitted by the Owner which are based on the lack of such prior information or its effect on the cost of the work.

B.10 INTERPRETATION OF SPECIFICATIONS. If any prospective bidder is in doubt as to the true meaning of any part of the proposed contract documents, he may submit to the Engineer a written request for an interpretation. The person submitting the request will be responsible for its prompt delivery. Any interpretation of the proposed documents will be made only by addendum mailed or delivered to each person receiving a set of such documents. The Owner will not be responsible for any other explanations or interpretations of the proposed documents.

B.11 BOND. The Contractor to whom the work is awarded will be required to furnish a performance bond to the Owner prior to signing of the contract. The bond shall be equal to 30 per cent of the dollar value of the contract and shall be payable in USA Dollars.

The bond shall cover the performance of the work included in these specifications. The bond shall be executed on the form provided a copy of which is attached hereto. The bond shall be signed by a surety authorized to do business in the state in which the Contractor is incorporated or has his principal office; acceptable as surety to the Owner and AID; and acceptable as surety under the criteria established by the USA Treasury Department for acceptable sureties on U.S. Government bonds.

B.12 INELIGIBILITY. No firm included by AID on its list of suspended, debarred, or ineligible bidders will be permitted to bid either individually or in a joint venture, nor shall any firm so listed qualify for performing the work as a subcontractor or otherwise.

No USA firm, or any firm owned more than 50 per cent by a USA firm shall be eligible for bidding or financing if the USA firm is not in compliance with Executive Order 11246, as amended, and regulations and orders issued thereunder.

X B.13 ACCEPTANCE AND REJECTION OF PROPOSALS. The Owner reserves the right to accept the proposal which, in its judgment, is the lowest responsive proposal by a qualified bidder and to reject any and all proposals and to waive minor irregularities in any proposal that is submitted. Any award, waiver of irregularities, or rejection of proposals shall be subject to AID approval.

A responsive proposal is one which accepts all of the terms and conditions of these specifications and documents without material modification. A material modification is one which affects in any way the price, quantity, quality, or delivery or installation date of equipment or materials; or the price, quality, scope, delivery date, or completion date of equipment and materials, or other services to be supplied or performed; or, which limits in any way any responsibilities, duties, or liabilities of the bidder or any rights of the Owner or of AID, as any of the foregoing have been specified or defined in these specifications and documents.

B.14 CURRENCIES. Proposal pricing shall be stated in USA Dollars and Indonesian Rupiahs as shown in the Proposal. It is intended that the Contractor be paid in the currencies expended by him. Costs incurred outside Indonesia shall be shown as USA Dollars. Pricing shall be in Indonesian Rupiahs for that portion of the work performed in Indonesia, except wage payment to expatriate employees and other allowable dollar costs.

X Refer to Item 12 of Addendum 1.

X 8.13 EVALUATION. Proposals will be [illegible] on the basis of the two prime [illegible] of equipment and generating capacities, [illegible] spare parts, freight, and [illegible] [illegible] evaluation.

For purposes of evaluation, the capital [illegible] and the [illegible] will be converted to dollars at the rate of [illegible] per dollar.

X *Refer to Item 13 of Addendum 1.*

PROPOSAL

To: Ir. Bagoes Moedijantoro, Director of Construction
PERUSAHAAN UMUM LISTRIK NEGARA
Jalan Sunan Ngampel 1
Kebajoran Baru, Jakarta, Indonesia

PROPOSAL FOR CONTROL AND INSTRUMENT EQUIPMENT

Gentlemen:

The undersigned bidder having read and examined the specifications and associated contract documents for the above designated equipment which will be incorporated in the new Semarang Steam Power Plant does hereby propose to furnish the equipment and provide the services set forth in this Proposal.

All prices stated herein are firm and shall not be subject to escalation provided this Proposal is accepted within 100 days after the date of opening of the proposals.

The prices stated in USA Dollars include all USA taxes which might lawfully be assessed against the undersigned. All Indonesian taxes which might lawfully be assessed against the undersigned shall be for the account of the Owner in accordance with the provisions of Article GC.22.2 of the GENERAL CONDITIONS.

LUMP SUM PRICES

The undersigned bidder hereby proposes to furnish control and instrument equipment complete in accordance with the specifications and associated contract documents as defined in Article GC.1 of the GENERAL CONDITIONS for the following firm lump sum prices.

C.1 EQUIPMENT AND MATERIALS

Lump sum price for furnishing fas USA port of shipment complete as specified:

Four Hundred ninety-five thousand nine hundred forty

_____ Dollars ($ 495,940.00 USA)
(Price in Words)

C.2 FREIGHT

Estimated lump sum price of ocean freight including port charges for handling, loading, and unloading onto barge; insurance; and port surcharge for shipping all equipment and materials furnished under C.1 above from USA port to Port of Semarang, Indonesia:

Forty-four thousand nine hundred

_____ Dollars($ 44,900.00 USA)
(Price in Words)

C.3 MANUFACTURER'S FIELD SERVICES

If required by the Owner, manufacturer's technical field services specified in Section 1A will be furnished at the following rates.

C.3.1 Representative's Daily Service Rate

Service rate for each technical field representative exclusive of living costs, expenses and transportation, and on the basis of six 8-hour days per week on the site:

One hundred ninety-five

_____ Dollars($ 195.00 USA)
(Price in Words)

C.3.2 Overtime Rate

Service representative's time in excess of 48 hours per week will be provided at the following hourly rate:

Thirty-nine

_____ Dollars($ 39.00 USA)
(Price in Words)

C.3.3 Expenses

Living costs and other expenses incurred in Indonesia will be invoiced at cost but will not exceed the following per diem:

Ten thousand four hundred

_____ Rupiahs(Rp 10,400. IND)
(Price in Words)

C.3.4 Transportation

Estimated cost per round trip from the bidder's office to Semarang, Central Java, Indonesia and return, including living costs and other expenses incidental to travel, but excluding per diem salary cost:

One thousand eight hundred fifty

Dollars($ 1,850.00 USA)

(Price in Words)

and

Seven hundred sixty-seven thousand

seven hundred fifty Rupiahs(Rp 767,750 IND)

(Price in Words)

The rupiah to dollars conversion rate is 415 Indonesian Rupiahs per USA Dollar.

The undersigned hereby declares that only the persons or firms interested in the Proposal as principal or principals are named herein, and that no other person or firms than herein mentioned have any interest in this Proposal or in the contract to be entered into; that this Proposal is made without connection with any other person, company, or parties likewise submitting a proposal; and that it is in all respects for and in good faith, without collusion or fraud.

If this Proposal is accepted, the undersigned bidder agrees to submit engineering data, provide services, and complete delivery of the equipment and materials in accordance with the schedules stipulated in the specifications. The undersigned fully understands that adherence to the schedules stipulated is of the essence of the contract.

If this Proposal is accepted, the undersigned hereby agrees to enter into a contract on the attached forms within 45 calendar days from the date of notice by the Owner of award of contract and to furnish a Performance Bond satisfactory to the Owner.

Dated at Wickliffe, Ohio this 7th day of December, 1973.

Bidder Bailey Meter Company

By A G Dubelow

Title National Sales Manager

Business Address of Bidder 29801 Euclid Avenue

Wickliffe, Ohio 44092

State of Incorporation Delaware

Address of Principal Office 29801 Euclid Avenue

Wickliffe, Ohio 44092

PROPOSAL DATA

D.1 GENERAL. Each bidder shall submit complete and definitive information on his offering in sufficient detail to permit a complete analysis of the bid. The requirements stated in the INSTRUCTIONS TO BIDDERS relative to information submittal shall be followed.

The requirements for information contained in this section are basic requirements. Additional information shall be provided as requested by the Engineer.

D.2 DRAWINGS. Outline drawings shall be submitted indicating the following information:

Control panel layout drawings indicating proposed arrangement of the bidders particular hardware

All drawings shall be in sufficient detail to permit preliminary plant arrangement studies to be made.

D.3 SUPPLEMENTARY INFORMATION. The following supplementary information shall be submitted:

A complete description of all proposed equipment

Functional one-line schematic drawings and description of all proposed control systems

A list of process control installations comparable to the one specified herein which the bidder has supplied to other power generation customers

Information, if available, on system maintenance and service contracts

List of recommended spare parts needed for a three year period of operation and estimated total cost, CIF. The successful bidder only will be required to submit a complete listing with individual prices.

D.4 EQUIPMENT DATA. The information required on the following pages is to assist the Engineer in analyzing the Proposal and in making an accurate estimate of the work required to install and erect the equipment and materials.

The data listed herein is stated for definitive purposes and for the convenience of the Owner.

The data listed herein shall not relieve the Contractor of his responsibility for meeting the requirements of the detailed specifications.

Note: Write entries boldly with black ink or type entries using carbon black ribbon. Do not use ball point pens. The completed pages will be reproduced by blue line printing.

Bailey Meter Company
(Bidder's Name)

Control Systems

Manufacturer and model number	
Selector stations	BMCo - Type AJ and AL
Controller devices	BMCo - Type AD and AH
Pneumatic control drives	BMCo - Type AC
Panel mounted selector stations required in addition to those specified in Instrument List	None

Instruments

Manufacturer and model number	
Multipoint recorders	L&N - Speedomax W and H
Strip chart recorders	BMCo - Type KL
Flow transmitters	BMCo - Type BK, CE
Area type flow transmitters	BMCo - Type JR
Level transmitters	Fisher - Type 2500T-249B BMCo - Type BK
Level switches	Barton - Type 289
Pressure transmitters	BMCo - Type KP
Differential pressure transmitters	BMCo - Type BK
Vertical indicators	BMCo - Type PY and PG
Conductivity indicator	None

(Trim Line)

	Bailey Meter Company (Bidder's Name)
Drum level indicator transmitter	Clark-Reliance Type Eye-Hye
Drum level control transmitter	BMCo - Type LH
Flue gas analyzer	BMCO - Type OC1530A
Flue gas sample system	BMCo
Thermocouples	BMCo
Thermowells	BMCo
Flow nozzles and orifices	BMCo
Indicating lights	Honeywell PTW
Pressure switches	Dwyer
Control switches	GE Type SB-1 and SB-10
Push-buttons	Honeywell PT
Toggle switches	Honeywell TL
Solenoid valves	ASCo
Annunciators	Scam - Panastat Series 70
Ammeters	GE Type AB40
Voltmeters	GE Type PB40
Wattmeters	GE Type AB40
Var meters	GE Type AB40
Watthour meters	GE Type DS63
Frequency meters	GE Type AB40
Totalizer	GE Type SST-3
Printing demand meter	GE Type PD-57F
Totalizing relay	GE Type S-3

(Trim Line)

	Bailey Meter Company (Bidder's Name)
Maximum depth behind face of control panel for any instrument	
Front face	18"
Rear face	18"
Panels	
Name of panel fabricator	BMCo
Length, weight, & height of panels	
Control Panel 1	15'2" L; 8' H; 11,170 lbs.
Pneumatic Systems Rack 1	8' L; 5' H; 2,100 lbs.
Control Panel 2	15' 2" L; 8' H; 11,170 lbs.
Pneumatic Systems Rack 2	8' L; 5' H; 2,100 lbs.
Thermocouple averaging enclosures	
Synchonizing panel	3' L; 1' 3"; 100 lbs.
Flash Evaporator Panel 1	1' 11" L; 7' 6" H; 1,640 lbs.
Flue Gas Analyzer Cabinet 1	2' 6" L; 7" H; 1,100 lbs.
Flue Gas Analyzer Cabinet 2	2' 6" L; 7' H; 1,100 lbs.
Accessory Equipment	
Manufacturer and model number	
Filter regulator units	Fisher 67FR
Instrument valves	Edward 2952
Shutoff and blowdown valves	Edward 2952

(Trim Line)

	Bailey Meter Company
	(Bidder's Name)
Purge sets	Fisher Porter Type 10A3135N
Terminal blocks	GE Type EB-5
Mimic bus	Bailey Meter Company
Fuse blocks	U.S.D. Co.

Tools

List of tools which shall be furnished with the equipment	None

(Trim Line)

Air Requirements

Total air required, scfm	Est. 60

Power Requirements

Total 240 volt ac power required, VA	Est. 2500

Bailey Meter Company
(Bidder's Name)

Control Valves

Valve tag number	CRV-001	CRV-003	CRV-004	
Manufacturer's name	Fisher	Fisher	Fisher	
Manufacturer's model number	4160R-667DBQ	4160R 667ES	4160R-667ED	
Body size, in.	1	3	6	
End-to-end dimension, in.	10	18.12	30.35	
Port area, % of maximum	85	61	79	
Travel, % predicted at design flow	88	83	80	
Inner valve type	Micro-Form	Equal %	Equal %	
Valve sizing coefficient				
Maximum	13.8	116	695	
Design requirement	11.9	72	550	
Stem thrust at max diff press., lb	Later	Later	Later	
Operator thrust at min supply press., lb	1380	1680	1200	
Stem diameter, in.	1/2	1/2	3/4	
Guide diameter, in.	Later	Later	Later	
Materials				
Trim	Alloy#6	Trim #1	Trim #1	
Trim facing	Alloy#6	Trim #1	Trim #1	
Body	WCB Stl.	WCB Stl.	WCB Stl.	
Stem	Alloy#6	Trim #1	Trim #1	

(Trim Line)

Bailey Meter Company
(bidder's Name)

Control Valves

Valve tag number	CRV-008	CRV-013	CRV-014	CRV-201 CRV-101
Manufacturer's name	Fisher	Fisher	Fisher	Fisher
Manufacturer's model number	98HH	667ES	667ES	416OR-667DBQ
Body size, in.	1	1 1/2	1	1
End-to-end dimension, in.	Later	9.88	8.25	10
Port area, % of maximum	Later	46	40	58
Travel, % predicted at design flow	Later	67	62	72
Inner valve type	Quick Open	Equal%	Equal%	Micro-Form
Valve sizing coefficient				
Maximum	Later	33.4	17.4	13.8
Design requirement	Later	15.5	7.0	8.0
Stem thrust at max diff press., lb	Later	800	480	1000
Operator thrust at min supply press., lb	Later	1100	740	1710
Stem diameter, in.	Later	3/8	3/8	1/2
Guide diameter, in.	Later	Later	Later	Later
Materials				
Trim	Std.	Trim #1	Trim #1	Alloy #6
Trim facing	Std.	Trim #1	Trim #1	Alloy #6
Body	WCB Stl	WCB Stl	WCB Stl	WCB Stl.
Stem	Std.	Trim #1	Trim #1	Trim #1

(Trim Line)

(PLN - 6104
(CONTROL AND INSTRUMENT EQUIPMENT - K-2A)
090473

Bailey Meter Company
(Bidder's Name)

Control Valves

Valve tag number	CRV-203 CRV-103	CRV-204 CRV-104	CRV-205 CRV-105	CRV-206 CRV-106
Manufacturer's name	Fisher	Fisher	Fisher	Fisher
Manufacturer's model number	416OR-667ED	667ES	667ES	667ES
Body size, in.	4	1 1/2	1 1/2	2
End-to-end dimension, in.	15.50	9.88	9.88	11.25
Port area, % of maximum	90	75	75	65
Travel, % predicted at design flow	92	48	48	85
Inner valve type	Equal %	Micro-Form	Micro-Form	Equal %
Valve sizing coefficient				
Maximum	379	11.5	11.5	20.8
Design requirement	350	5.5	5.5	13.7
Stem thrust at max diff press., lb	Later	415	415	650
Operator thrust at min supply press., lb	1200	1100	1100	1100
Stem diameter, in.	1/2	3/8	3/8	1/2
Guide diameter, in.	Later	Later	Later	Later
Materials				
Trim	Trim#1	Trim #1	Trim #1	Trim #1
Trim facing	Trim#1	Trim #1	Trim #1	Trim #1
Body	WCB Stl.	C5	C5	C5
Stem	Trim #1	Trim #1	Trim #1	Trim #1

(Trim Line)

Bailey Meter Company
(Bidder's Name)

Control Valves

Valve tag number	CRV-207 CRV-107	CRV-208 CRV-108	CRV-209 CRV-109	CRV-210 CRV-110
Manufacturer's name	Fisher	Fisher	Fisher	Fisher
Manufacturer's model number	667ES	667ES	667ES	667ES
Body size, in.	2 1/2	1 1/2	1 1/2	4
End-to-end dimension, in.	12.25	9.88	9.88	15.50
Port area, % of maximum	42	51	44	69
Travel, % predicted at design flow	70	70	65	79
Inner valve type	Equal %	Equal %	Equal %	Equal %
Valve sizing coefficient				
Maximum	40.3	33.4	33.4	203
Design requirement	17.2	17.1	14.8	141
Stem thrust at max diff press., lb	910	710	680	Later
Operator thrust at min supply press., lb	1380	1100	1100	1200
Stem diameter, in.	1/2	3/8	3/8	1/2
Guide diameter, in.	Later	Later	Later	Later
Materials				
Trim	Trim#1	Trim #1	Trim #1	Trim #1
Trim facing	Trim #1	Trim #1	Trim #1	Trim #1
Body	C5	C5	C5	C5
Stem	Trim #1	Trim #1	Trim #1	Trim #1

(Trim Line)

Bailey Meter Company
(Bidder's Name)

Control Valves

Valve tag number	CRV-211 CRV-111	CRV-213 CRV-212 CRV-113 CRV-112	CRV-216 CRV-116	CRV-217 CRV-117
Manufacturer's name	Fisher	Fisher	Fisher	Fisher
Manufacturer's model number	667ES	667ET	657YD	667EWT
Body size, in.	3	4	2	8
End-to-end dimension, in.	13.25	15.50	11.25	24.00
Port area, % of maximum	54	97	82	91
Travel, % predicted at design flow	78	75	Later	90
Inner valve type	Equal %	Equal %	Linear	Cavitrol
Valve sizing coefficient				
Maximum	115	145	74.2	386
Design requirement	63	142	61	355
Stem thrust at max diff press., lb	Later	Later	Later	Later
Operator thrust at min supply press., lb	570	3760	Later	3760
Stem diameter, in.	1/2	3/4	1/2	3/4
Guide diameter, in.	Later	Later	Later	Later
Materials				
Trim	Trim #1	Trim #3	Std.	Std.
Trim facing	Trim #1	Trim #3	Std.	Std.
Body	C5	WCB Stl	WCB Stl	WCB Stl
Stem	Trim #1	Trim #3	Std.	Std.

(Trim Line)

Bailey Meter Company
(Bidder's Name)

Control Valves

Valve tag number	CRV-218 CRV-118	CRV-219 CRV-119	CRV-220 CRV-120	CRV-222 CRV-122
Manufacturer's name	Fisher	Fisher	Fisher	Fisher
Manufacturer's model number	657ET	667ET	667ES	667ES
Body size, in.	2	6	2	1 1/2
End-to-end dimension, in.	11.25	20.00	11.25	9.88
Port area, % of maximum	79	68	71	53
Travel, % predicted at design flow	95	71	83	71
Inner valve type	Cavitrol	I Equal%	Equal%	Equal %
Valve sizing coefficient				
Maximum	28	394	56.2	33.4
Design requirement	22	245	40	18
Stem thrust at max diff press., lb	Later	Later	Later	Later
Operator thrust at min supply press., lb	1380	1200	1117	1380
Stem diameter, in.	1/2	3/4	1/2	3/8
Guide diameter, in.	Later	Later	Later	Later
Materials				
Trim	Std.	Std.	Trim #1	Trim #1
Trim facing	Std.	Std.	Trim #1	Trim #1
Body	WCB Stl	WCB Stl	WCB Stl	WCB Stl
Stem	Std	Std	Trim #1	Trim #1

(Trim Line)

Bailey Meter Company
(Bidder's Name)

Control Valves				
Valve tag number	CRV-223 CRV-123	CRV-224 CRV-124	CRV-225 CRV-125	CRV-227 CRV-226 CRV-127 CRV-126
Manufacturer's name	Fisher	Fisher	Fisher	Fisher
Manufacturer's model number	667EC	7611	7611	667EC
Body size, in.	1	4	6	1
End-to-end dimension, in.	8.25	2.50	2.50	8.25
Port area, % of maximum	41	79	58	67
Travel, % predicted at design flow	75	55	50	82
Inner valve type	Micro-Flute	Disc	Disc	Micro-Flute
Valve sizing coefficient				
Maximum	3.13	261	768	5.63
Design requirement	1.5	207	450	3.8
Stem thrust at max diff press., lb	Later	Later	Later	Later
Operator thrust at min supply press., lb	895	Later	Later	895
Stem diameter, in.	3/8	Later	Later	3/8
Guide diameter, in.	Later	Later	Later	Later
Materials				
Trim	Trim#37	316SS	316SS	Trim #37
Trim facing	Trim#37	316SS	316SS	Trim #37
Body	WCB Stl	Stl	Stl.	WCB Stl
Stem	Trim #37	316SS	316SS	Trim #37

(Trim Line)

Bailey Meter Company
(Bidder's Name)

Control Valves

Valve tag number	CRV-230 CRV-130	SSV-202 SSV-102	SSV-201 SSV-101	
Manufacturer's name	Fisher	Fisher	Fisher	
Manufacturer's model number	667ES	667EB	667ES	
Body size, in.	1 1/2	1 1/2	1	
End-to-end dimension, in.	9.88	9.88	8.25	
Port area, % of maximum	54	91	97	
Travel, % predicted at design flow	72	90	50	
Inner valve type	Equal %	Equal %	Quick Open	
Valve sizing coefficient				
Maximum	33.4	32.8	21.4	
Design requirement	18.2	30	20.8	
Stem thrust at max diff press., lb	Later	Later	Later	
Operator thrust at min supply press., lb	1380	895	3750	
Stem diameter, in.	3/8	3/4	3/8	
Guide diameter, in.	Later	Later	Later	
Materials				
Trim	Trim #1	Trim B	Trim #1	
Trim facing	Trim #1	Trim B	Trim #1	
Body	WCB Stl	WCB Stl	WCB Stl	
Stem	Trim #1	Trim B	Trim #1	

(Trim Line)

CONTROL SYSTEMS DESCRIPTION

COMBUSTION CONTROLS

Refer to Drawing No. D560061

The combustion control system is a two-element, flow tie-back, cross-limited type which utilizes a feedforward signal from steam flow (first stage pressure) with correction from turbine throttle pressure error to establish the required Btu input to the furnace and the required air flow for good combustion.

The required Btu input signal is cross-limited by the actual metered air flow in a low select auctioneer to insure that the Btu demand does not exceed that permitted by the available air. This signal is then compared to the actual Btu input, which is derived from the total net oil flow. The resulting error signal is acted by a two mode controller to establish the position demand of the fuel oil return values.

The air flow demand signal will be the output of a high select comparison of the master load signal, the total net oil flow, and a preset minimum air flow demand. The air flow demand will be compared to the actual metered air flow and the resulting error signal used in a two-mode controller to modulate the forced draft fan inlet vane and forced draft fan discharge damper control drives.

STEAM TEMPERATURE CONTROL

Refer to Drawing No. C560063

The steam temperature control system is designed to utilize the correcting ability of spray injection to maintian the steam temperature at set point. A two-mode controller acting on the main steam temperature error will develop the desuperheater outlet temperature set point necessary to make main steam temperature equal to its set point. Since the value of this set point will vary with load, an anticipation signal that is a function of the total air flow is summed with the desuperheater outlet temperature set point developed by the two-mode controller. To prevent unwanted spray action from taking place due to the anticipation signal at low loads and prior to making desired main steam temperature, a sliding limiter is used to null out the anticipation signal until the two-mode controller acting on main steam temperature error begins to respond.

The desuperheater outlet temperature set point is compared with the measured temperature to produce an error. A two-mode controller will provide the necessary spray flow to maintain the desuperheater inlet temperature at set point. Rapid and accurate control of spray injection is obtained by using the desuperheater outlet temperature as a feedback because of the short response time of this temperature to changes in spray injection.

FEEDWATER CONTROL

Refer to Drawing No. C560062

The feedwater control system is of the three-element type utilizing measurements of steam flow (first stage pressure), total feedwater flow, and drum level to position the feedwater regulating valves.

Steam flow is an inferrential measurement using first stage pressure as an index of boiler load. Feedwater flow and desuperheater spray water flow are totalized and the result becomes total feedwater flow.

Drum level (mechanically pressure compensated) is compared to its operated adjustable set point. The resultant error signal is used to bias the steam flow, the combination of which becomes the demand for feedwater flow. This demand is compared to the total feedwater flow. A two-mode controller acts on the resultant error signal to position the feedwater regulating valves and maintains drum level at its set point.

CONDENSATE CONTROL

Refer to Drawing No. C560062

This control system is a three-element type utilizing measurements of feedwater flow, condensate flow, and deaerator level to control condensate flow and deaerator level. Deaerator level is measured and compared to its set point. The resultant error signal is used to correct the total feedwater flow signal in order to arrive at the demand for condensate flow. This demand is compared to the actual measured flow. The resultant error signal is acted upon by a two-mode controller to position the condensate control valve.

AIR PREHEAT TEMPERATURE CONTROL

Refer to Drawing No. C560063

This control system is designed to maintain the average cold end temperature of the air heater by modulating the air preheat water control valve. Measurements of air heater air inlet and gas outlet temperature are averaged to determine cold end average temperature. This signal is compared against set point and any resultant error signal is acted upon by a two-mode controller to position the air preheat water control valve.

FLASH EVAPORATOR CONTROL

Refer to Drawing No. C560063

This control system utilizes the measurements of blowdown flow and make-up flow to control the ratio of blowdown flow to make-up flow by positioning the control valve in the blowdown line. The value of the ratio is determined by the operator by a seperate adjustable control knob on the panel selector station. Blowdown flow is subtracted from make-up flow for recording net distillate flow.

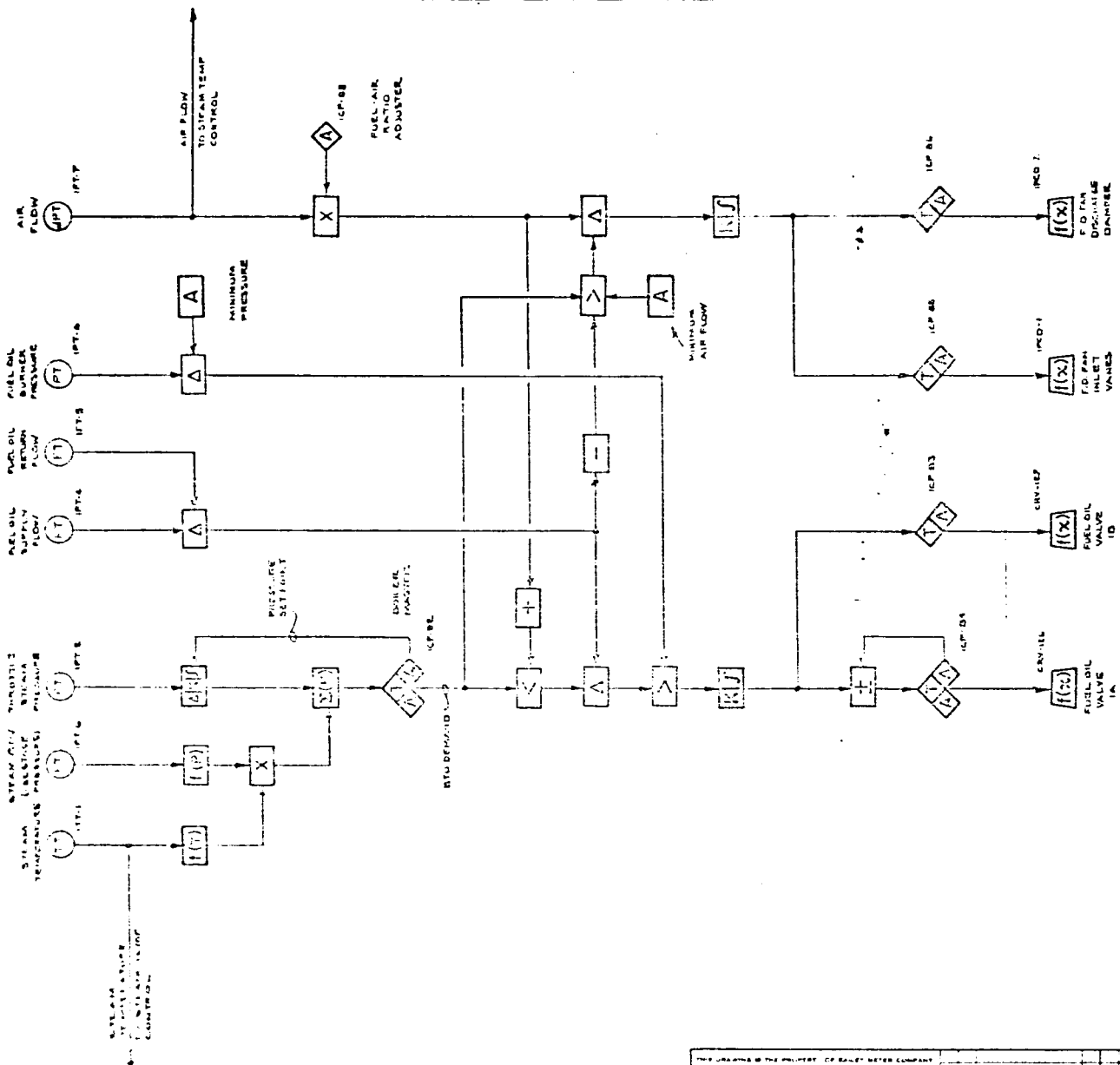

COMBUSTION CONTROL

CUSTOMER PERUSAHAAN UMUM LISTRIK NEGARA
PLANT: TEMBALANG STEAM POWER PLANT UNITS 1 & 2
CONTRACTING ENGINEER & MAKER: STEINMUELLER
BAILEY CO. JOB NO. CUST ORDER NO

Babcock & Wilcox U.S.A.
BAILEY METER COMPANY

D56336-A

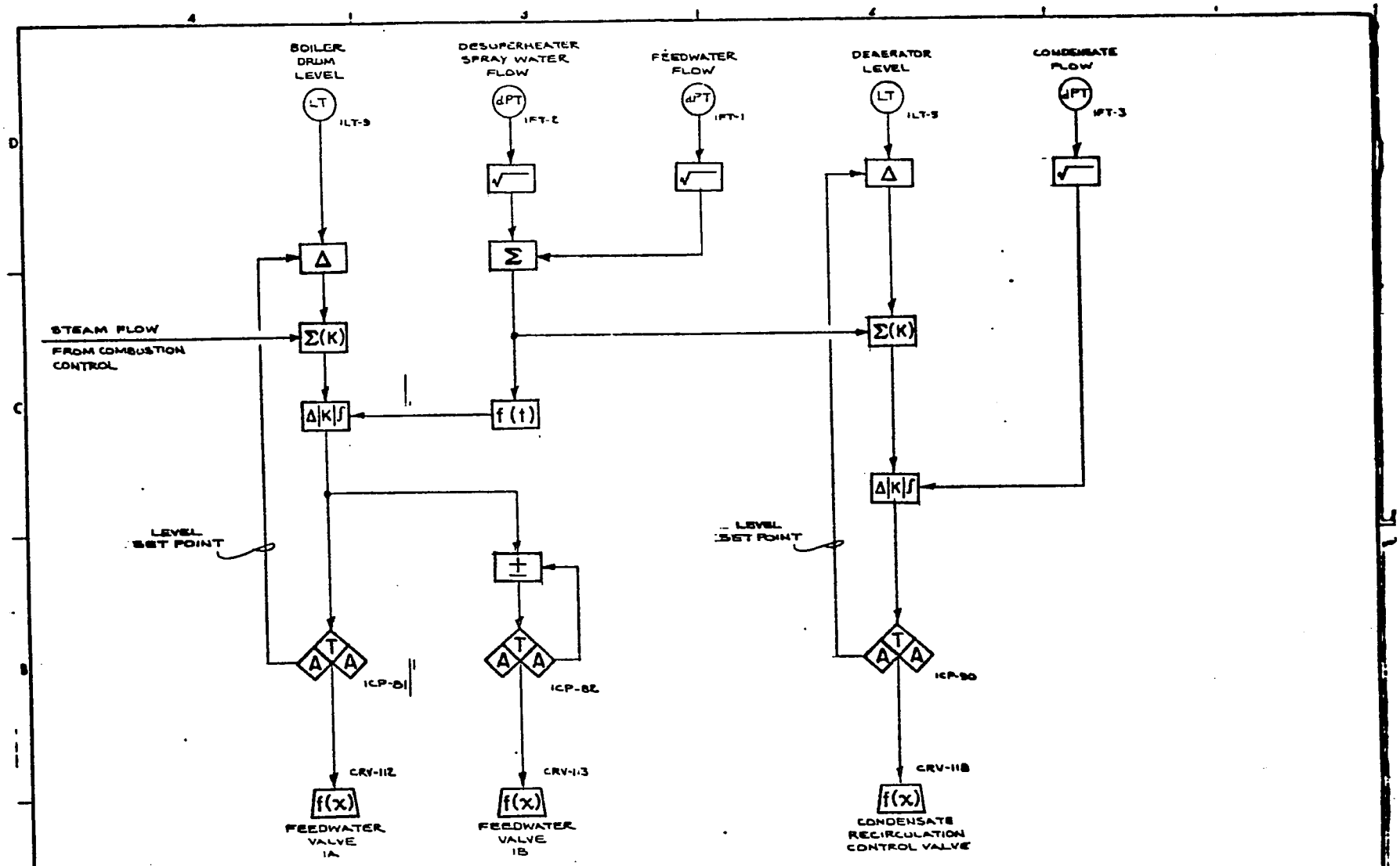

FEEDWATER AND CONDENSATE CONTROLS

CUSTOMER: PERUSAHAAN UMUM LISTRIK NEGARA
PLANT: LEMARANG STEAM POWER PLANT UNITS 1 & 2
CONTRACTING ENG.: BLACK & VEATCH INTERNATIONAL
B.M.CO. JOB NO.: CUST. ORDER NO.

THIS DRAWING IS THE PROPERTY OF BAILEY METER COMPANY. NEITHER THE DRAWING, NOR REPRODUCTIONS OF IT, NOR INFORMATION DERIVED FROM IT IS TO BE GIVEN TO OTHERS NO USE IS TO BE MADE OF IT WHICH IS OR MAY BE INJURIOUS TO BAILEY METER COMPANY.

REV	DATE	CHANGE	APVD

Bailey Babcock & Wilcox
BAILEY METER COMPANY

DRAWN BY: DESIGNED BY:
C7500-2-A

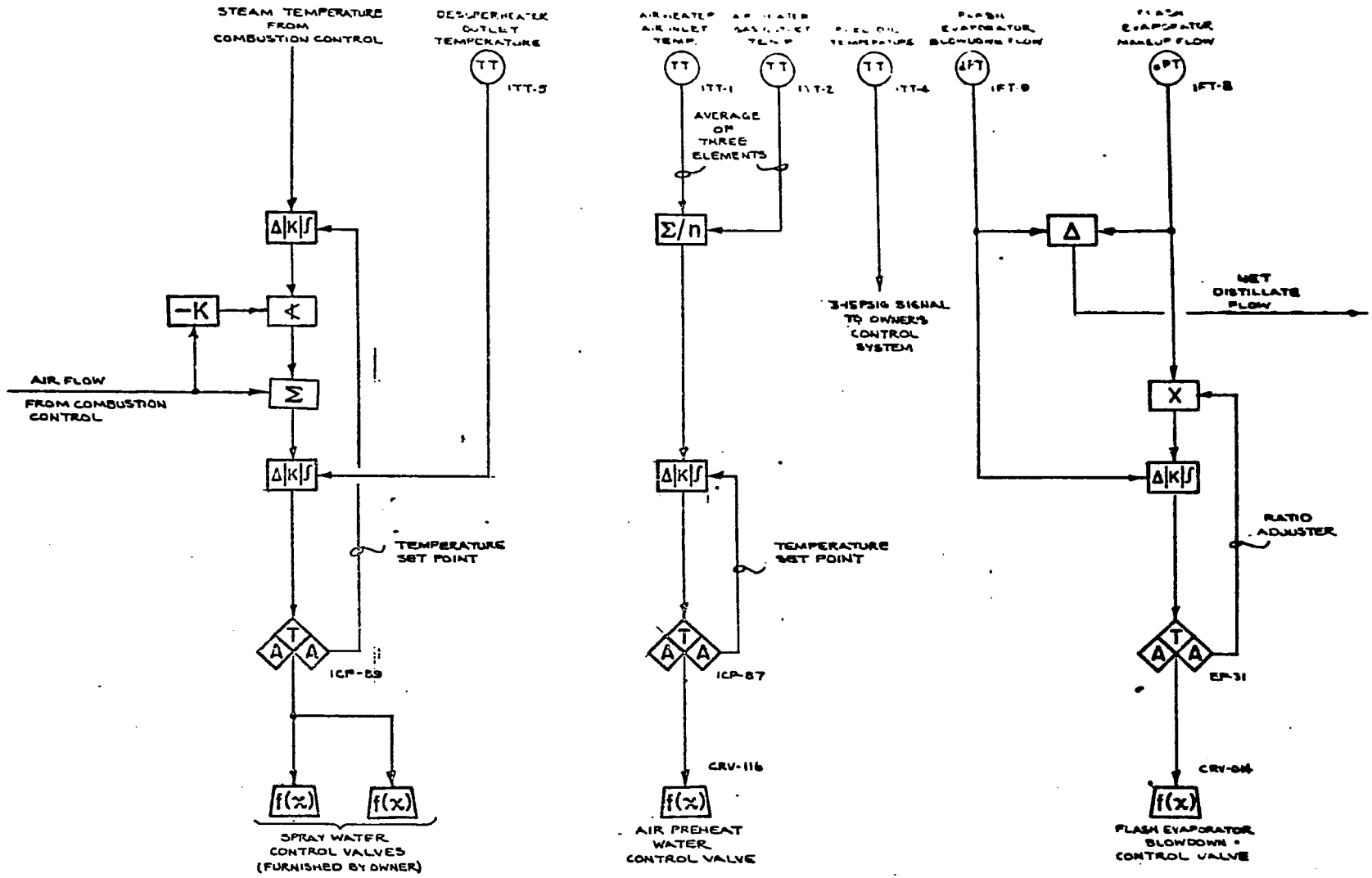

MISCELLANEOUS CONTROLS

CUSTOMER: PERUSAHAAN UMUM LISTRICK NEGARA
PLANT: SEMARANG STEAM POWER PLANT UNITS 1&2
CONTRACTING ENG.: BLACK & VEATCH INTERNATIONAL
B.M.CO. JOB NO.: CUST. ORDER NO.

THIS DRAWING IS THE PROPERTY OF BAILEY METER COMPANY. NEITHER THE DRAWING, NOR REPRODUCTIONS OF IT, NOR INFORMATION DERIVED FROM IT IS TO BE GIVEN TO OTHERS. NO USE IS TO BE MADE OF IT WHICH IS OR MAY BE INJURIOUS TO BAILEY METER COMPANY.

REV	DATE	CHANGE	APPD

Bailey Babcock & Wilcox
BAILEY METER COMPANY

DATE

C-60063-A

Item No.	Quan.	Type and Description	Service	Reference
		RECORDERS		
	12	MINI-LINE 500 Type KL5210A Model R10 Class 888 3-Pen Strip Chart Recorder each to inc.: 3 Yr. Supply Charts & Ink		P12-3
		Item No. 1CP & 2CP - 1	Fuel Oil Flow Air Flow Throttle Press	
		- 2	Feedwater Flow Steam Flow Drum Level	
		- 3	Steam Temp Desup Out Temp Desup Spray Flow	
		- 4	Hotwell Level Cond Abs Press Cond Flow	
		- 5	Air In Temp Gas Out Temp Cold End Av Temp	
		- 6	Fuel Oil Hdr Pres Fuel Oil Temp Fuel Oil Vis	
	2	MINI-LINE 500 Type KL5210A Model R10 Class 880 2-Pen Strip Chart Recorder each to inc.: 3 Yr. Supply Charts & Ink		P12-3
		Item No. 1CP & 2CP - 7	Oxygen Comb	
	2	L&N Speedomax H 12-Point, 6-1/2" Strip Chart Recorder		
		Item No. 1CP & 2CP - 10	Turb 1 & 2 Temp	
	2	L&N Speedomax W, 12 Point, 9-7/8" Strip Chart Recorder		
		Item No. 1CP & 2CP - 11	Gen 1 & 2 Stat Wind Temp	
	2	L&N Speedomax W and Programmer 12 Point, Multi-bank Recorder		
		Item No. 1CP & 2CP - 12	Temp Monitor 1 & 2	

Item No.	Quan.	Type and Description	Service	Reference
	2	L&N Speedomax H, 3-Point, 6-1/2" Strip Chart Recorder		
		Item No. 1CP & 2CP - 13	Conductivity	
	1	L&N Speedomax H, 2-Point, 6-1/2" Strip Chart Recorder		
		Item No. 1CP - 14	Dissolved Oxygen	
	1	MINI-LINE 500 Type KL5210A Model R10 Class 800 1-Pen Strip Chart Recorder each to inc.: 3 Yr. Supply Charts & Ink		P12-3
		Item No. EP-1	Net Distill Flow	
	1	L&N Speedomax H, 3-Point 6-1/2" Strip Chart Recorder		
		Item No. EP-2	Conductivity: 1. Distillate 2. Brine 3. Cycle Makeup	
		INDICATORS		
	2	Clark-Reliance Eye-Hye Miniature 10-Light Indicator		
		Item No. 1CP & 2CP - 21	Blr Drum Level	
	34	Type PY110 Pneumatic Edgewise Indicator		P12-6
		Item No. 1CP & 2CP - 22	FW Press Econ In Press Blr Drum Press Sup Out Press	
		- 24	Cond Pump Disch Press Hotwell Level Makeup Level Service Wtr Lvl	
		- 26	Ign Oil Press Fuel Oil Hdr Press Fuel Oil Burner Press	

Item No.	Quan.	Type and Description	Service	Reference
		- 27	LP Htr 1A Level LP Htr 1B Level HP Htr 1C Level HP Htr 1D Level Deaer 1E Level Deaer Press	
	2	Type PG Edgewise Multi-Pointer Gage each to inc.:		M42-2
	1	PG200FA Case		
	2	Model B1 Receiver		
		Item No. 1CP & 2CP - 23	Control Air Press Plant Air Press	
	2	Type PG Edgewise Multi-Pointer Gage each to inc.:		M42-2
	3	PG200FA Case		
	2	Model DB Receiver		
	4	Model DA Receiver		
	6	4-Way Blowdown Valve		
	6	Purge Meter		
		Item No. 1CP & 2CP - 28	Boiler Draft	
	1	Type 14A Pneumatic Integrator		
		Item No. EP-11	Net Distill Flow	
	6	Type 14A Pneumatic Integrators		
		Item No. 1CP & 2CP - 29 - 30 - 31	Fuel Oil Feedwater Desup Spray	
	2	Meriam Model 31EG10FF Barometer		
		Item No. 1CP & 2CP - 32	Barometer	
	2	Meriam Model 30EG25FF Condenser Vacuum Gage		
		Item No. 1CP & 2CP - 33	Condenser Vacuum	

Item No.	Quan.	Type and Description	Service	Reference
		ELECTRIC METERS		
	35	G.E. Type AB40 Ammeter		
		Item No. 1CP & 2CP - 41	Per Spec. 6104-K-2A	
		- 42		
		- 43		
		- 44		
		1CP - 45		
		- 46		
		- 47		
		1CP & 2CP - 48		
		- 49		
		- 50		
		- 61		
		- 64		
		- 65		
		- 66		
		- 67		
		- 69		
		- 70		
		- 73		
		- 74		
	4	G.E. Type DB40 Voltmeter		
		Item No. 1CP & 2CP - 54	Gen Volts	
		- 62	4160 Volt Swgr Volts	
	2	G.E. Type AB-40 Frequency Meter		
		Item No. 1CP & 2CP - 57	Gen Freq	
	2	G.E. Type AB-40 VARS Meter	Gen VARS	
		Item No. 1CP & 2CP - 58		
	4	G.E. Type AB-40 Watts Meter		
		Item No. 1CP & 2CP - 75	4160 V Swgr Watts	(Main)
		- 76	4160 V Swgr Watts	(Res)
	6	G.E. Type DS-63 Watthour Meter		
		Item No. 1CP & 2CP - 60	Gen Watt Hours	
		- 63	4160 V Swgr Watthours	
		- 77	4160 V Swgr Watt Hours (Main)	

Item No.	Quan.	Type and Description	Service	Reference
	1	G.E. Type PG-57F Printing Demand Meter Item No. 1CP - 72		
	1	G.E. Type SST-3 Totalizer with G.E. Type S-3, Cat. #731X2G1 Relay Item No. 1CP - 72		
		PANEL STATIONS		
		MINI-LINE 500 H/A Stations to inc.:		
	10	Type AJ51A50 Setpoint Station		P91-2
		Item No. 1CP & 2CP - 81	FW Vlv 1A & 2A	
		- 87	Air Prehtr Temp	
		- 89	Stm Temp	
		- 90	Cond Valve	
		- 92	Blr Master	
	4	Type AJ51C10 Bias Station		P91-2
		Item No. 1CP & 2CP - 82	FW Vlv 1B & 2B	
		- 84	Fuel Oil Vlv 1B & 2B	
	6	Type AJ51B50 Transfer Station		P91-2
		Item No. 1CP & 2CP - 83	Fuel Oil Vlv 1A & 2A	
		- 85	FD Fan In Vanes	
		- 86	FD Fan Disch Dampers	
	2	Type AL51A50 Setpoint Manual Station		P91-1
		Item No. 1CP & 2CP - 88	Fuel Air Ratio	
	1	Type AJ51A50 Setpoint Station		P91-2
		Item No. EP-31	Makeup-Blowdown Ratio	

Item No.	Quan.	Type and Description	Service	Reference
		SWITCHES AND LIGHTS		
	92	G.E. Type SB-1, 5-Stage Control Switches		
		Item No. 1CP & 2CP - 101		
		- 103		
		- 104		
		- 107		
		- 108		
		- 111		
		- 112		
		- 113		
		- 114		
		- 115		
		- 116		
		- 117		
		- 118		
		- 119		
		- 120		
		- 121		
		- 122		
		- 123		
		- 125		
		- 126		
		- 127		
		- 128		
		- 129		
		- 130		
		- 134		
		- 135		
		1CP - 142		
		1CP & 2CP - 143		
		- 144		
		- 149		
		- 150		
		- 151		
		- 152		
		- 153		
		- 154		
		- 156		
		- 157		
		- 158		
		- 159		
		- 161		
		- 162		
		- 163		
		- 164		
		- 174		
		- 176		
		EP-26		

Item No.	Quan.	Type and Description	Service	Reference
	6	G.E. Type SB-10, 5-Stage Control Switch		
		Item No. 1CP - 136		
		- 138		
		- 140		
		- 180		
		EP - 21		
		- 22		
	2	Honeywell Type PT Selector Switch		
		Item No. 1CP & 2CP - 110	Air Htr 1 & 2 Air Motor	
	16	Honeywell Type PT Pushbutton		
		Item No. 1CP & 2CP - 145	Ann Ackn	
		- 146	Ann Reset	
		- 147	Ann Test	
		- 148	Ann First-Out Reset	
		- 177	Ann Ackn	
		- 178	Ann Reset	
		- 179	Ann Test	
		EP - 23	Ann Ackn	
		- 24	Ann Test	
	317	Honeywell Type PTW Indicating Lights		
		Item No. 1CP & 2CP - 101-105		
		- 107-128		
		- 130		
		- 133-142		
		- 150-154		
		- 156		
		- 157		
		- 159		
		- 163		
		- 164		
		- 173-176		
		- 180		
		EP - 21		
		- 22		
		- 26		

Item No.	Quan.	Type and Description	Service	Reference
		SUBPANELS		
	4	5 High by 10 Wide Panastat Solid State Series 70 Annunciator System each to inc.:		Bulletin A-868
	1	Model 75510 Cabinet		
	50	Model 70-AM1 Plug-in Modules		
	1	Model 70-FP1 Flasher		
	1	Model 70-PCS-101 Power Supply		
	1	Model 70-X1 Auxiliary Relay with WB-2 Wire Box		
		Item No. 1CP & 2CP - 201 - 203	Boiler Turb-Gen	
	2	2High by 10 Wide Panastat Solid State Series 70 Annunciator System each to inc.:		Bulletin A-868
	1	Model 7554 Cabinet		
	20	Model 70-TFS1 Plug-in Modules		
	1	Model 70-FP2 Flasher		
	1	Model 70-PCD-101 Power Supply		
	1	Model 70-X1 Auxiliary Relay with WB-2 Wire Box		
		Item No. 1CP & 2CP - 202	Boiler Trip	
	2	2High by 10 Wide Panastat Solid State Series 70 Annunciator System each to inc.:		Bulletin A-868
	1	Model 7554 Cabinet		
	20	Model 70-AM1 Plug-in Modules		
	1	Model 70-FP1 Flasher		
	1	Model 70-PCD-101 Power Supply		
	1	Model 70-X1 Auxiliary Relay with WB-2 Wire Box		
		Item No. 1CP & 2CP - 204	Switchgear	
	2	Turbine Protection Subpanels per Dwg. K1003 & K1004		
		Item No. 1CP & 2CP - 207		

Item No.	Quan.	Type and Description	Service	Reference
	1	4 High by 6 Wide Panastat Solid State Series 70 Annunciator System to inc.:		Bulletin A-868
	1	Model 7555 Cabinet		
	24	Model 70-A7 Plug-in Modules		
	1	Model 70-FP1 Flasher		
	1	Model 70-PCD-101 Power Supply		
	1	Model 70-X1 Auxiliary Relay with WB-2 Wire Box		
	1	Model 70-X9 Auxiliary Relay with WB-2 Wire Box		
	1	Time Delay Device		
		Item No. EP-41	Flash Evap Annun	
	2	Boiler Emergency Trip Subpanel per Dwg. K1005 & K1006		
		Item No. 1CP & 2 CP - 208		
	2	Turbine Emergency Trip Subpanel per Dwg. K1005 & K1006		
		Item No. 1CP & 2CP - 209		
		INTERNAL ITEMS		
	1	Annunciator Horn, 250 Volt DC		
		Item No. 1CP & 2CP - 231		
	1	Temperature Monitor Multi-Bank Inputs		
		Item No. 1CP & 2CP - 232		
	48	Moore Series TCA Dual Alarm Trip Module		
		Item No. 1CP & 2CP - 233		
	1	G.E. Type S-#, Cat. #731X2G1 Totalizer Relay		
		Item No. 1CP - 234		

Item No.	Quan.	Type and Description	Service	Reference
	2	Clark-Reliance Relay Control Unit		
		Item No. 1CP & 2CP - 235		
	2	Transformers in Parallel Alarm Buzzer		
		Item No. 1CP & 2CP - 236		
	1	West. CVE-1 Synchronism Check Relay		
		Item No. 1CP - 237		
		PNEUMATIC CONTROL DRIVES		
	2	Type AC1016PB Model 304N-S2 Pneumatic Control Drive each to inc.:	FD Fan In Vanes	P81-1
	1	Heater		
	2	Limit Switches		
	1	67FR-38 PRV w/Filter & Gage		
	1	Set Conn. Linkage		
	1	Linkage Drawing		G81-5
		Item No. 1PCD - 1 2PCD - 1		
	2	Type AC1016PB Model 304N-S2 Pneumatic Control Drive each to inc.:	FD Fan Disch Damper	
	1	Heater		
	2	Limit Switches		
	1	67FR-38 PRV w/Filter & Gage		
	1	Set Conn. Linkage		
	1	Linkage Drawing		G81-5
		Item No. 1 PCD - 2 2 PCD - 2		
		TRANSMITTER EQUIPMENT		
	2	Dynatrol Type CL-10DV Viscosity Detector each to inc.:	Fuel Oil Vis	
	1	Flushing Flo-Guard		
	1	Signal Converter		
		Item No. 1AT - 1 2AT - 1		

Item No.	Quan.	Type and Description	Service	Reference
	2	Flue Gas Analysis Systems each to inc.:	Flue Gas Oxygen & Combustibles	
	1	Type OC1530A Model B57 Analyzer to inc.: Sample Filter w/Heater Air Supply Filter w/Regulator Sample and/or Air Supply Failure Alarm Mtg. Bracket		E65-1
	1	#669570A1 Water Aspirated Gas Sample System		D65-8
	1	#662166J6X 6 ft. SS Dry Sample Tube		
	1	#195756A1 Hydrogen Regulator		
	1	Type WM53A Model N101 Indicator Transmitter to inc.: Model N101 Case		E12-3
		Class GE210 Receiver	% Oxygen	
		Class GE310 Receiver	% Combustibles	
		Class PB1AD Pneumatic Transmitter	% Oxygen	
		Class PB1BC Pneumatic Transmitter	% Combustibles	
	2	Cylinders of Calibrating Gases		
		Item No. 1AT - 2 2AT - 2		
	2	Type BK8110S Differential Pressure Transmitter each to inc.:	Feedwater Flow	P21-19
	1	3-Valve Manifold		
	2	Valves		
	1	Type KC1610A Square Root Converter		P22-5
	2	67FR Air Sets		
		Item No. 1FT - 1 2FT - 1		
	2	Type BK8110S Differential Pressure Transmitter each to inc.:	Desup Spray Water Flow	P21-19
	1	3-Valve Manifold		
	2	Valves		
	1	Type KC1610A Square Root Converter		P22-5
	2	67FR Air Sets		
		Item No. 1FT - 2 2FT - 2		

Item No.	Quan.	Type and Description	Service	Reference
	2	Type BK8110S Differential Pressure Transmitter each to inc.:	Condensate Flow	
	1	3-Valve Manifold		
	2	Valves		
	1	Type KC1610A Square Root Converter		P22-5
	2	67FR Air Sets		
		Item No. 1FT - 3 2FT - 3		
	2	Type JR1342A Style FS46 Area Meter Transmitter each to inc.:	Fuel Oil Supply Flow	P22-8 G22-4
	1	67FR Air Set		
		Item No. 1FT - 4 2FT - 4		
	2	Type JR1342A Style FS46 Area Meter Transmitter each to inc.:	Fuel Oil Return Flow	P22-8 G22-4
	1	67FR Air Set		
		Item No. 1FT - 5 2FT - 5		
	2	Type KP1320 Model B Pressure Transmitter each to inc.:	Steam Flow	P41-4
	1	67FR Air Set		
	2	Valves		
	2	Type CE3331 Model N100 Class P11 Flow Meter each to inc.:	Air Flow	M22-2
	1	Model N100 Case		
	1	Class P11 Pneumatic Transmitter		
	1	67FR Air Set		
		Item No. 1FT - 7 2FT - 7		
	1	Type BK8110S Differential Pressure Transmitter to inc.:	Flash Evap Makeup Flow	P21-19
	1	3-Valve Manifold		
	2	Valves		
	1	Type KC1610A Square Root Converter		P22-5
	2	67FR Air Sets		
		Item No. 1FT - 8		

Bailey Babcock & Wilcox

PROPOSAL

EQUIPMENT LIST

Proposal No. F54199
Rev. No. 0
Date Dec. 7, 1973
Page 2.13 of

Item No.	Quan.	Type and Description	Service	Reference
	1	Type BK8110S Differential Pressure Transmitter to inc.:	Flash Evap Blowdown Fl.	P21-19
	1	3-Valve Manifold		
	2	Valves		
	1	Type KC1610A Square Root Converter		
	2	67FR Air Sets		P22-5
		Item No. 1FT - 9		
	1	Type BK8110S Differential Pressure Transmitter to inc.:	Flash Evap Clg Water Flow	P21-19
	1	6" Receiver Gage		
	1	67FR Air Set		
	2	Valves		
	1	3-Valve Manifold		
		Item No. 1FT - 10		
	1	Type BK8110S Differential Pressure Transmitter to inc.:	Desalination FW Flow	P21-19
	1	6" Receiver Gage		
	1	67FR Air Set		
	2	Valves		
	1	3-Valve Manifold		
		Item No. 1FT - 11		
	2	Fisher 2500T-249B Level-Trol with 2516 Controller	HP Htr 1E Level	
		Item No. 1LT - 1 2LT - 1		
	2	Fisher 2500T-249B Level-Trol with 2516 Controller	HP Htr 1D Level	
		Item No. 1LT - 2 2LT - 2		
	2	Fisher 2500T-249b Level-Trol with 2516 Controller	LP Htr 1B Level	
		Item No. 1LT - 3 2LT - 3		

Item No.	Quan.	Type and Description	Service	Reference
	2	Fisher 2500T-249B Level-Trol with 2516 Controller Item No. 1LT - 4 2LT - 4	LP Htr 1A Level	
	2	Fisher 2500T-249B Level-Trol with 2516 Controller Item No. 1LT - 5 2LT - 5	Deaer 1C Level	
	2	Fisher 2500T-249B Level-Trol with 2516 Controller Item No. 1LT - 6 2LT - 6	Hotwell Level	
	1	Type BK8111S Level Transmitter to inc.: 1 Reservoir 1 3-Valve Manifold 2 Valves 1 67FR Air Set Item No. 1LT - 7	Makeup Water Storage Level	P31-19
	1	Type BK8111S Level Transmitter to inc.: 1 Reservoir 1 3-Valve Manifold 2 Valves 1 67FR Air Set Item No. 1LT - 8	Service Water Storage Level	P31-19
	2	Type BK8111S Level Transmitter each to inc.: 1 Reservoir 1 3-Valve Manifold 2 Valves 1 67FR Air Set Item No. 2LT - 7 2LT - 8	Condensate Tank Level	P31-19

Item No.	Quan.	Type and Description	Service	Reference
	2	Type LH3385 Model N100W Class M-P Differential Level Indicator Transmitter each to inc.:	Boiler Drum Level	M31-2
	1	Model N100W Case		
	1	Class M Press. Comp.		
	1	Class P Pneumatic Transmitter		
	1	Reservoir		
	5	Valves		
		Item No. 1LT - 9 2LT - 9		
	2	Clark-Reliance Electro Eye-Hye Level Indicator Transmitter each to inc.:	Boiler Drum Level	
	1	Model EL-1800 Electro Level 10-Probe Chamber		
	1	Control Unit		
		Item No. 1LT - 10 2LT - 10		
	2	Type KP1320A Model B Pressure Transmitter each to inc.:	SH Out Press	P41-4
	1	67FR Air Set		
	2	Valves		
		Item No. 1PT - 1 2PT - 1		
	2	Type KP1320A Model B Pressure Transmitter each to inc.:	Throttle Steam Press	P41-4
	1	67FR Air Set		
	2	Valves		
		Item No. 1PT - 2 2PT - 2		
	2	Type KP1320A Model B Pressure Transmitter each to inc.:	Deaerator Press	P41-4
	1	67FR Air Set		
	2	Valves		
		Item No. 1PT - 3 2PT - 3		
	2	Type KP1320A Model B Pressure Transmitter each to inc.:	Feedwater Press	P41-4
	1	67FR Air Set		
	2	Valves		
		Item No. 1PT - 4 2PT - 4		

Item No.	Quan.	Type and Description	Service	Reference
	2 1 2	Type KP1320A Model B Pressure Transmitter each to inc.: 67FR Air Set Valves Item No. 1PT - 5 2PT - 5	Fuel Oil Hdr Press	P41-4
	2 1 2	Type KP1320A Model B Pressure Transmitter each to inc.: 67FR Air Set Valves Item No. 1PT - 6 2PT - 6	Fuel Oil Bnr Press	P41-4
	2 1 2	Type KP1320A Model B Pressure Transmitter each to inc.: 67FR Air Set Valves Item No. 1PT - 7 2PT - 7	Blr Drum Press	P41-4
	2 1 2	Type KP1320A Model B Pressure Transmitter each to inc.: 67FR Air Set Valves Item No. 1PT - 8 2PT - 8	Cond Abs Press	P41-4
	2 1 2	Type KP1320A Model B Pressure Transmitter each to inc.: 67FR Air Set Valves Item No. 1PT - 9 2PT - 9	Econ Inlet Press	P41-4
	2 1 2	Type KP1320A Model B Pressure Transmitter each to inc.: 67FR Air Set Valves Item No. 1PT - 10 2PT - 10	Cond Pump Disch Press	P41-4

Item No.	Quan.	Type and Description	Service	Reference
	2	Type KP1320A Model B Pressure Transmitter each to inc.:	Ign Oil Press	P41-4
	1	67FR Air Set		
	2	Valves		
		Item No. 1PT - 11 2PT - 11		
	2	Type WM53A Model N100 Class E-PB Indicator Transmitter each to inc.: Model N100 Case Class E Receiver Class PB Pneumatic Transmitter Mtg. Bracket 67FR Air Set	Stm Temp	E12-3
	1	Type K Thermocouple Assembly P/N 6620946A18 with Protecting Well P/N 6618038A4		E51-7
		Item No. 1TT - 1 2TT - 1		
	2	Type WM53A Model N100 Class E-PB Indicator Transmitter each to inc.: Model N100 Case Class E Receiver Class PB Pneumatic Transmitter Mtg. Bracket 67FR Air Set	Air Htr Air In Temp	E12-3
	3	Type K Thermocouple Assembly P/N 669399J13 with Protecting Well P/N 6616567A1		E51-7
	1	L&N Swamping Box		
		Item No. 1TT - 2 2TT - 2		
	2	Type WM53A Model N100 Class E-PB Indicator Transmitter each to inc.: Model N100 Case Class E Receiver Class PB Pneumatic Transmitter Mtg. Bracket 67FR Air Set	Air Htr Gas Out Temp	E12-3

Item No.	Quan.	Type and Description	Service	Reference
	3	Type K Thermocouple Assembly P.N 669399J13 with Protecting Well P/N 6616567A1		E51-7
	1	L&N Swamping Box Item No. 1TT - 3 2TT - 3		
	2	Type WM53A Model N100 Class E-PB Indicator Transmitter each to inc.: Model N100 Case Class E Receiver Class PB Pneumatic Transmitter Mtg. Bracket 67FR Air Set	Fuel Oil Temp	E12-3
	1	Type K Thermocouple Assembly P/N 669832A24 with Protecting Well P/N 669808A1 Item No. 1TT - 4 2TT - 4		
	2	Type WM53A Model N100 Class E-PB Indicator Transmitter each to inc.: Model N100 Case Class E Receiver Class PB Pneumatic Transmitter Mtg. Bracket 67FR Air Set	Desup Out Temp	E12-3
	1	Type K Thermocouple Assembly P/N 6620946A18 Item No. 1TT - 5 2TT - 5		
	2	4" Type 316 SS Weld-in Flow Nozzle each to inc.:	Feedwater Flow	
	1	Set Pri. Element Auxiliary Item No. 1PE - 1 2PE - 1		G18-1
	2	2" Type 316 SS Weld-in Flow Nozzle Pipe Assy. each to inc.:	Desup Spray Water Flow	
	1	Set Pri. Element Auxiliary Item No. 1PE - 2 2PE - 2		G18-1

Item No.	Quan.	Type and Description	Service	Reference
	2	6" Type 316 SS Orifice Plate Each to include:	Condensate Flow	
	1	Set Pri. Element Auxiliary		G18-1
		Item No. 1PE - 3 2PE - 3		
	1	2" Type 316 SS Weld-in Flow Nozzle Pipe Assy to inc.:	Flash Evap Makeup Flow	
	1	Set Pri. Element Auxiliary		G18-1
		Item No. 1PE - 8		
	1	2" Type 316 SS Weld-in Flow Nozzle Pipe Assy to inc.:	Flash Evap Blowdown Flow	
	1	Set Pri. Element Auxiliary		G18-1
		Item No. 1PE - 9		
	1	6" Type 752 Annubar Flow Element Model Material, with 1/2" Weld Coupling and 1/2" NPT Fittings	Flash Evap Clg Water Flow	Bulletin E-100
		Item No. 1PE - 10		
	1	6" Type 752 Annubar Flow Element Monel Material, with 1/2" Weld Coupling and NPT Fittings	Deslination FW Flow	Bulletin E-100
		Item No. 1PE - 11		
		PNEUMATIC CONTROL COMPONENTS		
	1	Set MINI-LINE 500 Controllers to inc.:	Control Systems:	
	20	Type AD51001 Prop.	Combustion	
	21	Type AD51002 P & I	Stm Temp	P92-2
	11	Type AN55002 P & I	Feedwater	P92-1
	5	Type AF51001 Prop.	Condensate	P92-7
	6	Select	Air Preheat Temp	
	2	Volume Chamber	Flash Evap	
	10	PRV & Gage		

Item No.	Quan.	Type and Description	Service	Reference
		PANELS AND ENCLOSURES		
	2	Control Panels 1 & 2 per B&W Dwg. No. K1001 & K1002, each fabricated in two sections, complete factory wired & tubed		
	2	Pneumatic Systems Racks 1 & 2 Open Type, Free Standing, complete factory tubed & wired		
	2	Flue Gas Analyzer Cabinets 1 & 2 Type OS32-X11-10, complete factory wired & tubed		
	1	Synchronized Panel per B&W Dwg. No. K1007, complete factory wired		
	1	Flash Evaporator Panel per B&W Dwg. No. K1008, complete factory wired and tubed		
		CONTROL VALVES		
	1	1" Type 667DBQ Control Valve with 4160R Controller Item No. CRV-001		
	1	3" Type 667DBQ Control Valve with 4160R Controller Item No. CRV-003		
	1	6" Type 667ED Control Valve with 4160R Controller Item No. CRV-004		
	1	1" Type 98HH Control Valve with Self-Contained Regulator Item No. CRV-008		
	1	1-1/2" Type 667ES Control Valve Item No. CRV-013		

Item No.	Quan.	Type and Description	Service	Reference
	1	1" Type 667ES Control Valve Item No. CRV-014		
	2	1" Type 667DBQ Control Valve with 4160R Controller Item No. CRV-101 CRV-201		
	2	4" Type 667ED Contron Valve with 4160R Controller Item No. CRV-103 CRV-203		
	2	1-1/2" Type 667ES Control Valve Item No. CRV-104 CRV-204		
	2	1-1/2" Type 667ES Control Valve Item No. CRV-105 CRV-205		
	2	2" Type 667ES Control Valve Item No. CRV-106 CRV-206		
	2	2-1/2" Type 667ES Control Valve Item No. CRV-107 CRV-207		
	2	1-1/2" Type 667ES Control Valve Item No. CRV-108 CRV-208		
	2	1-1/2" Type 667ES Control Valve Item No. CRV-109 CRV-209		
	2	4" Type 667ES Control Valve Item No. CRV-110 CRV-210		

Item No.	Quan.	Type and Description	Service	Reference
	2	3" Type 667ES Control Valve Item No. CRV-111 CRV-211		
	4	4" Type 667ET Control Valve Item No. CRV-112 CRV-212 CRV-113 CRV-213		
	2	2" Type 657YD Control Valve Item No. CRV-116 CRV-216		
	2	8" Type 667EWT Control Valve Item No. CRV-117 CRV-217		
	2	2" Type 657ET Control Valve Item No. CRV-118 CRV-218		
	2	6" Type 667ET Control Valve Item No. CRV-119 CRV-219		
	2	2" Type 667ES Control Valve Item No. CRV-120 CRV-220		
	2	1-1/2" Type 667ES Control Valve Item No. CRV-122 CRV-222		
	2	1" Type 667EC Control Valve Item No. CRV-123 CRV-223		
	2	4" Type 7611 Control Valve Item No. CRV-124 CRV-224		

Item No.	Quan.	Type and Description	Service	Reference
	2	6" Type 7611 Control Valve		
		Item No. CRV-125 CRV-223		
	4	1" Type 667EC Control Valve		
		Item No. CRV-126 CRV-226 CRV-127 CRV-227		
	2	1-1/2" Type 667ES Control Valve		
		Item No. CRV-130 CRV-230		
	2	1" Type 667ES Control Valve		
		Item No. SSV-101 SSV-201		
	2	1-1/2" Type 667EB Control Valve		
		Item No. SSV-102 SSV-202		
		LEVEL CONTROLLERS		
	1	Type 2500-249B Level Controller		
		Item No. LC-CRV-013		
	2	Type 2502-249B Level Controller		
		Item No. LC-CRV-105 LC-CRV-205		
	2	Type 2502-249B Level Controller		
		Item No. LC-CRV-107 LC-CRV-207		
	2	Type 2502-249B Level Controller		
		Item No. LC-CRV-109 LC-CRV-209		

Item No.	Quan.	Type and Description	Service	Reference
	2	Type 2502-249B Level Controller Item No. LC-CRV-111 LC-CRV-211		
	2	Type 2502-249B Level Controller Item No. LC-CRV-117 LC-CRV-217		
	2	Type 2502-249B Level Controller Item No. LC-CRV-119 LC-CRV-219		
	2	Type 2502-249B Level Controller Item No. LC-CRV-120 LC-CRV-220		
	2	Type 2503-249B Level Controller Item No. LC-CRV-123 LC-CRV-223		
	2	Type 2500-249B Level Controller Item No. LC-CRV-130 LC-CRV-230		
		MISCELLANEOUS		
	10	Instruction Manuals per each unit		
	2	Barton Model 289A Ind. Diff. Press Switches each to inc.:	Drum Level Trip	
	1	Reservoir		
	78	Pressure Switches	Alarm Contacts	

BLAKVINI SWMS

BAILYMTR WICK

DECEMBER 21 1973 225P

ATTN L J SVOBODA, PROJECT MANAGER

6104 A12 D
THN 15
Copy to K-2 GFP2

RE FMCO PROPOSAL F5A199 FOR INSTRUMENT AND CONTROL EQUIPMENT FOR SEMARANG POWER PLANT. PRICE FOR ITEM C.2 FREIGHT ON BID FORM PAGE C-2 OF PROPOSAL IS REDUCED BY DOLLARS 10,460 DUE TO PRICING ERROR. NEW TOTAL ADJUSTED PRICE FOR ITEM C.2 FREIGHT IS NOW DOLLARS 34,560.

11 30 pm

D F POKAGOVICH
BAILEY METER COMPANY
WICKLIFFE OHIO

BLAKVINI SWMS

BAILYMTR WICK
LM

RECEIVED
DEC 21 1973
BLACK & VEATCH INTERNATIONAL

BEST AVAILABLE COPY

Bailey
a subsidiary of
Babcock & Wilcox, U.S.A.

Bailey Meter Company
P.O. Box 8009
Prairie Village, Kansas 66208
Telephone: (913) 362-6093

January 17, 1974

Perusahaan Umum Listrik Negara
Jalan Sunan Ngampel 1
Kebajoran Baru
Jakarta, Indonesia

Attention: Ir. Bajoes Moedijantors
Director of Construction

Subject: Control and Instrument Equipment
Semarang Steam Power Plant
Black and Veatch Specification 6104-K-2A

Gentlemen:

Please refer to transportation section of the subject bid. It has been brought to our attention that the intent of this section was to have estimates given in USA Dollars for air travel costs and estimates of Rupiahs for miscellaneous expense, such as entrance fees and local costs.

The figures for this would then be Seventeen hundred dollars ($1700.00 USA), and Sixty-two thousand two hundred and fifty Rupiahs (Rp 62,250 IND).

Very truly yours,
BAILEY METER COMPANY

E. H. Blackwell
Manager
Kansas City District

EHB:k
C:(2) Black and Veatch International
1500 Meadow Lake Parkway
Kansas City, Missouri 64114
Attention: Mr. L. J. Svoboda

Bailey
a subsidiary of
Babcock & Wilcox, U.S.A.

Bailey Meter Company
Wickliffe, Ohio 44092
Telephone: (216) 943-5500
Telex 98-421 — Cable: Bailymeter

April 19, 1974

Black & Veatch International
P.O. Box 8405
Kansas City, Missouri 64114

Attn: L. J. Svoboda, Project Manager

Ref: Perusahaan Unum Listirk Negara
Semarang Steam Plant
BVI Project 6104

Subject: Letter Of Intent

Gentlemen:

We accept the PLN Letter of Intent attached to your 15 April 1974 letter. A signed copy of the letter is enclosed.

We will enter the order as of 15 April 1974, but no processing will take place until a contract is consummated.

We thank you for favoring us with this business, and are looking forward to working with you.

Very truly yours,
BAILEY METER COMPANY

R. D. Ragle
Manager, International Marketing

RDR:gs

Bailey
a subsidiary of
Babcock & Wilcox, U.S.A.

Bailey Meter Company
P.O. Box 8009
Prairie Village, Kansas 66208
Telephone: (913) 362-6093

May 6, 1974

Black and Veatch International
1500 Meadow Lake Parkway
P. O. Box 8405
Kansas City, Missouri 64114

Attention Mr. L. G. Svoboda
Project Manager

Subject: Perusahaan Umum Listrik Negara
Semarang Steam Power Plant Units 1 & 2
USAID Loan 497-H-024
Control and Instrument Equipment

Reference: BVI Project 6104
BVI File K-2A
Bailey Proposal No. F54199
Dated 12-7-73

Gentlemen:

The purpose of this letter is to restate and supersede page No. C-4 "Contract Document Variations" included in our Proposal F54199.

To the GENERAL CONDITIONS add the following clause:

GC.50 LIMITATION OF LIABILITY

Seller shall not be liable for consequential damages, such as, but not limited to, losses of profits or losses by reason of plant shutdown. This provision shall not alter nor relieve the seller from his obligations under this contract.

Trust the above helps clarify our proposal.

Very truly yours,
BAILEY METER COMPANY

J. J. Sadauskas
Manager
Kansas City District

BEST AVAILABLE COPY

JJS:k

Executed in 7 (seven) counterparts Federal Insurance Company -Bond # 8059 45 82-E

BID BOND

December 20, 1973

PRINCIPAL

Bailey Meter Company
29801 Euclid Avenue
Wickliffe, Ohio 44092

X CORPORATION

STATE OF INCORPORATION: Delaware

SURETY(IES)

Federal Insurance Company
100 William Street
New York, N. Y. 10038

PERCENT OF BID PRICE	AMOUNT NOT TO EXCEED (DOLLARS)	(THOUSANDS)	(HUNDREDS)	(CENTS)	BID DATE	INVITATION NO.
10%	60	000	00		12-20-73	

FOR (Construction, Supplies or Services): Bailey Control & Instrument Equipment, per Black &Veatch, Int'l. Spec. 6104-K-2A

KNOW ALL MEN BY THESE PRESENTS, That we, the Principal and Surety(ies) hereto, are firmly bound to Pennsylvania Power District Negate (hereinafter called PLN) in the above penal sum for the payment of which we bind ourselves, our heirs, executors, administrators, and successors, jointly and severally. *Provided* That, where the Sureties are corporations acting as co-sureties, we, the Sureties, bind ourselves in such sum "jointly and severally as well as severally" only for the purpose of allowing a joint action or actions against any or all of us, and for all other purposes each Surety binds itself, jointly and severally with the Principal, for the payment of such sum only as is set forth opposite the name of such Surety, but if no limit of liability is indicated, the limit of liability shall be the full amount of the penal sum.

THE CONDITION OF THIS OBLIGATION IS SUCH, that whereas the Principal has submitted the bid identified above.

NOW, THEREFORE, if the Principal, upon acceptance by PLN of his bid identified above, within the period specified therein for acceptance (sixty (60) days if no period is specified), shall execute such further contractual documents, if any, and give such bond(s) as may be required by the terms of the bid as accepted within the time specified (ten (10) days if no period is specified) after receipt of the forms by him, or in the event of failure so to execute such further contractual documents and give such bonds, if the Principal shall pay PLN for any cost of procuring the work which exceeds the amount of his bid, then the above obligation shall be void and of no effect.

Each Surety executing this instrument hereby agrees that its obligation shall not be impaired by any extension or of the time for acceptance of the bid that the Principal may grant to PLN notice of which extension(s) to the Surety(ies) being hereby waived; provided that such waiver of notice shall apply only with respect to extensions aggregating not more than sixty (60) calendar days in addition to the period originally allowed for acceptance of the bid.

IN WITNESS WHEREOF, the Principal and Surety(ies) have executed this bid bond and have affixed their seals on the date set forth above.

PRINCIPAL

	1	2	
Signature(s)	T J Weigand (Seal)	S G Dukelow (Seal)	Corporate Seal
Name(s) & Title(s) (Typed)	T. J. Weigand Controller	S. G. Dukelow National Sales Manager	

INDIVIDUAL SURETIES

	1	2
Signature(s)	(Seal)	(Seal)
Name(s) (Typed)		

CORPORATE SURETY(IES)

Name & Address	Federal Insurance Company 100 William St., New York, N. Y.	STATE OF INC.	LIABILITY LIMIT New Jersey
Signature(s)	Helen Holzmann		Corporate Seal
Name(s) & Title(s) (Typed)	Helen Holzmann Attorney-in-fact		

E-1

BEST AVAILABLE COPY

CORPORATE SURETY(IES) (Continued)				
SURETY B	Name & Address	STATE OF INC	LIABILITY LIMIT	Corporate Seal
	Signature(s) 1	2		
	Name(s) & Title(s) (Typed) 1	2		
SURETY C	Name & Address	STATE OF INC	LIABILITY LIMIT	Corporate Seal
	Signature(s) 1	2		
	Name(s) & Title(s) (Typed) 1	2		
SURETY D	Name & Address	STATE OF INC	LIABILITY LIMIT	Corporate Seal
	Signature(s) 1	2		
	Name(s) & Title(s) (Typed) 1	2		
SURETY E	Name & Address	STATE OF INC.	LIABILITY LIMIT	Corporate Seal
	Signature(s) 1	2		
	Name(s) & Title(s) (Typed) 1	2		
SURETY F	Name & Address	STATE OF INC.	LIABILITY LIMIT	Corporate Seal
	Signature(s) 1	2		
	Name(s) & Title(s) (Typed) 1	2		
SURETY G	Name & Address	STATE OF INC.	LIABILITY LIMIT	Corporate Seal
	Signature(s) 1	2.		
	Name(s) & Title(s) (Typed) 1	2.		

INSTRUCTIONS

1. This form is authorized for use whenever a bid guaranty is required in connection with construction work or the furnishing of supplies or services. There shall be no deviation from this form without approval by PLN.

2. The full legal name and business address of the Principal shall be inserted in the space designated "Principal" on the face of this form. The bond shall be signed by an authorized person. Where such person is signing in a representative capacity (e.g., an attorney-in-fact), but is not a member of the firm, partnership, or joint venture, or an officer of the corporation involved, evidence of his authority must be furnished.

3. The penal sum of the bond may be expressed as a percentage of the bid price if desired. In such cases, a maximum dollar limitation may be stipulated (e.g., 20% of the bid price but the amount not to exceed dollars).

4. (a) Where more than a single corporation surety is involved, their names and addresses (city and State) shall be inserted in the spaces (Surety A, Surety B, etc.) headed "CORPORATE SURETY (IES)", and in the space designated "SURETY (IES)" on the face of this form only the letter identification of the Sureties shall be inserted.

(b) Where individual sureties execute the bond, they shall be two or more responsible persons. A completed Affidavit of Individual Surety, for each individual surety, shall accompany the bond. Such sureties may be required to furnish additional substantiating information concerning their assets and financial capacity as PLN may require.

5. Corporations executing the bond shall affix their corporate seals. Individuals shall execute the bond opposite the word "Seal".

6. The name of each person signing this bid bond should be typed in the space provided.

Certified Copy of

POWER OF ATTORNEY

Know all Men by these Presents, That the FEDERAL INSURANCE COMPANY, 90 John Street, New York, New York, a New Jersey Corporation, has constituted and appointed, and does hereby constitute and appoint

T. V. Lenihan
R. E. McErlean
A. R. Dreyer
W. P. Gorton
Helen Holzmann
of
Cleveland, Ohio

each its true and lawful Attorney-in-Fact to execute under such designation in its name and to affix its corporate seal to and deliver for and on its behalf as surety thereon or otherwise, bonds of any of the following classes, to-wit:

1. Bonds and Undertakings (other than Fiduciary Bonds) filed in any suit, matter or proceeding in any Court, or filed with any Sheriff or Magistrate, for the doing or not doing of anything specified in such Bond or Undertaking, in which the penalty of the bond or undertaking does not exceed the sum of One Hundred Thousand Dollars ($100,000.00).
2. Surety Bonds to the United States of America or any agency thereof, including those required or permitted under the laws or regulations relating to Customs or Internal Revenue; License and Permit Bonds or other indemnity bonds under the laws, ordinances or regulations of any State, City, Town, Village, Board or other body or organization, public or private; bonds to Transportation Companies, Lost Instrument bonds, Lease bonds, Workmen's Compensation bonds, Miscellaneous Surety bonds and bonds on behalf of Notaries Public, Sheriffs, Deputy Sheriffs and similar public officials.
3. Bonds on behalf of contractors in connection with bids, proposals or contracts.

In Witness Whereof, the said FEDERAL INSURANCE COMPANY has, pursuant to its By-Laws, caused these presents to be signed by its Assistant Vice President and Assistant Secretary and its corporate seal to be hereto affixed this 1st day of January 19 73.

FEDERAL INSURANCE COMPANY

By

George McClellan
Assistant Vice-President

John MacGregor
Assistant Secretary

STATE OF NEW YORK }
County of New York } ss.:

On this 1st day of January 1973, before me personally came John MacGregor, to me known and by me known to be Assistant Secretary of the FEDERAL INSURANCE COMPANY, the Corporation described in and which executed the foregoing Power of Attorney and the said John MacGregor being by me duly sworn, did depose and say that he resides in the City of Short Hills, in the State of New Jersey; that he is Assistant Secretary of the FEDERAL INSURANCE COMPANY and knows the corporate seal thereof; that the seal affixed to the foregoing Power of Attorney is such corporate seal and was thereto affixed by authority of the By-Laws of said Company and that he signed said Power of Attorney as Assistant Secretary of said Company by like authority; that he is acquainted with George McClellan and knows him to be Assistant Vice-President of said Company, and that the signature of said George McClellan subscribed to said Power of Attorney is in the genuine handwriting of said George McClellan and was thereto subscribed by authority of said By-Laws and in deponent's presence.

Acknowledged and Sworn to before me on the date above written

Notary Public

MARY K. BENDICK
Notary Public, State of New York
No. 24-0237960
Qualified in Kings County
Certificate filed in New York County
Commission Expires March 30, 1973

CITY AND COUNTY OF NEW YORK: ss

I, the undersigned, Assistant Secretary of the FEDERAL INSURANCE COMPANY, do hereby certify that the following is a true excerpt from the By-Laws of the said Company as adopted by its Board of Directors on March 11, 1963 and amended May 27, 1971 and that this By-Law is in full force and effect.

"ARTICLE XVIII.

Section 2. All bonds, undertakings, contracts and other instruments other than as above for and on behalf of the Company which it is authorized by law or its charter to execute, may and shall be executed in the name and on behalf of the Company either by the Chairman or the Vice Chairman or the President or a Vice-President, jointly with the Secretary or an Assistant Secretary, under their respective designations, except that any one or more officers or attorneys-in-fact designated in any resolution of the Board of Directors or the Executive Committee, or in any power of attorney executed as provided for in Section 3 below, may execute any such bond, undertaking or other obligation as provided in such resolution or power of attorney.

Section 3. All powers of attorney for and on behalf of the Company may and shall be executed in the name and on behalf of the Company, either by the Chairman or the Vice-Chairman or the President or a Vice-President or an assistant Vice-President, jointly with the Secretary or an Assistant Secretary, under their respective designations."

And I further certify that I have compared the foregoing copy of the POWER OF ATTORNEY with the original thereof and the same is a correct and true copy of the whole of said original Power of Attorney and that said Power of Attorney has not been revoked.

And I further certify that said FEDERAL INSURANCE COMPANY is duly licensed to transact fidelity and surety business in each of the States of the United States of America, District of Columbia, Puerto Rico, and each of the Provinces of Canada with the exception of Prince Edward Island; and is also duly licensed to become sole surety on bonds, undertakings, etc., permitted or required by law.

Given under my hand and the seal of said Company at New York, N. Y., this 20th day of December, 1973

Assistant Secretary

[illegible] PLN [illegible]
[illegible]
[illegible]
[illegible] Lawar PLNPST
Post Box : 2 KBB
Tel : [illegible] Cabang Kebayoran Baru
[illegible] Cabang Kebayoran Baru

Map. No.

No. : 1. 1752/DIR/74

Jakarta, April 13, 19 74.

Sural Ldr. No.

Location

Period

Kepada :

PERUSAHAN & PERDIMPAAN

Semarang Steam Plant
Letter of Intent for
Spec. 610-K-2 A.

M/S. BAILEY METER CO.

29801 Euclid Avenue
Wickliffe, Ohio 44092

U. S. A.

Dear Sirs,

We wish to advise you that it is the intent of PLN to purchase the control and instrument equipment, specification 610-K-2A to be installed at the Semarang Steam Power Plant from Bailey Meter Company using the Bailey Meter Company proposal number F5h199 dated 7 December 1973, which was opened in Jakarta, Indonesia on 5 January 1974 as the basis for contract discussions, negotiations and with subsequent agreement within 45 days.

Upon consummation of a contract between PLN and Bailey Meter Company this Letter of Intent will become part of the said contract. If no contract is consummated or if AID does not approve the contract, either partyway cancel this Letter of Intent with neither party being under any financial or other obligation to the other party.

Please acknowledge receipt of this Letter of Intent and indicate your agreement by returning the second copy of this Letter of Intent after the signing for proper acceptance at your earliest convenience.

BEST AVAILABLE COPY

BEST AVAILABLE COPY

Sincerely yours,
PERUSAHAN UMUM LISTRIK NEGARA
The Board of Directors,

DIREKSI

Ir. ABDUL KADIR
First Director

We hereby agree to the foregoing:

Date : _____

BASIS OF CONTRACT AWARD

10 May 1974

The Basis of Contract Award shall be in accordance with the Specifications and Documents for Control and Instrument Equipment 6104-K-2A Issued 24 October 1973; Addendum 1 dated 14 November 1973; Addendum 2 dated 26 November 1973; Addendum 3 dated 18 December 1973; Bailey Meter Company Proposal F54199 dated 7 December 1973; Bailey Meter Company Telex dated 21 December 1973; Bailey Meter Company supplemental letters dated 17 January 1974, 19 April 1974, and 6 May 1974; and PLN Letter of Intent M.1752/DIR/74 dated 13 April 1974.

The total contract price shall be established as follows:

C.1 Equipment and Materials (Refer to Bailey Meter Company Proposal F54199)	$495,940	
Spare Parts, add	20,000	
Subtotal	$515,940	
Ocean freight, handling and insurance	34,500	
Service Representative	35,000	Rp 1,560,000
Contractor Administrative expense	-	244,762
TOTAL CONTRACT PRICE	$585,440	Rp 1,804,762

(PLN 6104)
(CONTROL AND INSTRUMENTS K-2A)
051074-1

CONTRACT NO. PJ. 094/202/74

CONTRACT AGREEMENT

THIS CONTRACT AGREEMENT, made and entered into this [redacted] of JUN 1974, by and between the PERUSAHAAN UMUM LISTRIK NEGARA, Party of the First Part and hereinafter called "Owner", and BAILEY METER COMPANY, a Delaware corporation with its principal office in Wickliffe, Ohio, Party of the Second Part and hereinafter called "Contractor".

WITNESSETH:

THAT WHEREAS, the Owner has caused to be prepared specifications, plans and other contract documents for the work as herein specified; and

WHEREAS, the said Contractor has submitted to the Owner a tender in accordance with the terms of this Contract Agreement; and

WHEREAS, the Owner has determined and declared the aforesaid Contractor has submitted the lowest evaluated proposal for the said work and has duly awarded to the said Contractor a contract therefor, for the sum or sums named in the Contractor's Proposal, a copy thereof being attached to and made a part of this Contract Agreement;

NOW, THEREFORE, in consideration of the compensation to be paid to the Contractor and of the mutual agreements herein contained, the parties to these presents have agreed and hereby agree, the Owner for itself and its successors, and the Contractor for itself, himself, or themselves, or its, his or their successors and assigns, or its, his or their executors and administrators, as follows:

ARTICLE I. That the Contractor shall furnish fas U.S.A. port of shipment; furnish ocean freight (including port charges for handling, loading and unloading) insurance and surcharges; and deliver to the Port of Semarang, Indonesia, control and instrument equipment all in accordance with the provisions of the contract documents as defined in Article GC.1 of the General Conditions, which are attached and made a part hereof, and shall execute and complete all work included in and covered by the Owner's official award of this Contract Agreement to the said Contractor.

ARTICLE II. That the Owner shall pay to the Contractor for furnishing fas U.S.A. port of shipment equipment and materials designated in the foregoing Article I as embraced in this Contract Agreement, and the Contractor will accept as full compensation therefor, the sum (subject to adjustments as provided by the contract) of FIVE HUNDRED FIFTEEN THOUSAND NINE HUNDRED FORTY DOLLARS ($515,940.00); payment to be made in United States currency in the manner provided in the contract documents attached hereto.

That the Owner shall pay to the Contractor for Administrative expenses the sum of TWO HUNDRED FORTY-FOUR THOUSAND SEVEN HUNDRED SIXTY-TWO RUPIAHS (Rp 244,762 IND). *Administrative expenses shall be paid by the Owner to the Contractor from the budget of Proyek Survey dan Perencanaan Umum Kelistrikan (S.P.U.K.) immediately upon signing of the Contract.*

(PLN 6104)
(CONTROL AND INSTRUMENTS K-2A)
051074-1

ARTICLE III. That the Owner shall pay to the Contractor for furnishing the actual cost of ocean freight (including port charges for handling, loading, and unloading), insurance and surcharge on equipment and materials designated in the foregoing Article I from the U.S.A. port of shipment to the Port of Semarang, Indonesia, and the Contractor will accept as full compensation therefor the estimated sum of THIRTY-FOUR THOUSAND FIVE HUNDRED DOLLARS ($34,500.00); subject to final adjustment to actual cost at the conclusion of the shipment of all required materials and equipment; payment to be made in United States currency in the manner provided in the contract documents attached hereto.

ARTICLE IV. That the Contractor shall furnish technical field services upon request by the Owner and that the Owner shall pay to the Contractor for furnishing such services, and the Contractor will accept as full compensation therefor, payment in accordance with the following schedule:

Per diem rate for each technical field representative:

ONE HUNDRED NINETY-FIVE DOLLARS ($195.00 USA)

Living costs and other expenses in Indonesia for each technical field representative at actual cost but not to exceed the following per diem:

TEN THOUSAND FOUR HUNDRED RUPIAHS (Rp 10,400 IND)

Round trip economy transportation including living expenses, and expenses incidental to travel, to and from Semarang, Indonesia, at actual cost.

The total costs for the service representative is estimated to be

THIRTY-FIVE THOUSAND DOLLARS ($35,000.00 USA)
and ONE MILLION FIVE HUNDRED SIXTY THOUSAND RUPIAHS (Rp 1,560,000 IND)

ARTICLE V. That time of delivery is of the essence of this Contract Agreement, and that the Contractor shall proceed with the specified work and shall conform to the schedule specified in Section IA of the specifications.

ARTICLE VI. That in the event the Contractor shall fail to deliver the specified equipment and materials within the time period stipulated in the foregoing Article V, the Contractor shall be liable to the Owner for the amount of TWO HUNDRED THIRTY-FIVE DOLLARS ($235.00), as liquidated damages and not as a penalty, for each calendar day of delay in delivery of the equipment which causes a delay in achieving commercial operation of said unit or causes the Construction Contractor to mobilize in addition to his normal construction to achieve commercial operation of said unit in accordance with the provisions of Article GC.34 of the General Conditions; that said liquidated damages shall

wu.

DEPARTEMEN KEUANGAN REPUBLIK INDONESIA
DIREKTORAT JENDERAL PAJAK
INSPEKSI PAJAK JAKARTA SELATAN DUA.-

Inspeksi Pajak Jakarta Sel.Dua.
Nomor N.652.041. V/74.

SURAT KUASA UNTUK MENYETOR BEA DAN DENDA BEA METERAI

Nama, jabatan dan tempat tinggal wajib bea atau pemohon.	G.P. COCKVELL.- Representative Bailey Motor Company Jl.Nuri No.11 - Kebayoran Lama JAKARTA - SELATAN.-	Jumlah bea dan denda meterai yang terhutang
Keterangan mengenai tanda yang harus dikenakan bea meterai dengan menyebutkan dasar pengenaannya dan besarnya tarip.	Surat perjanjian pemborongan No. ... Tgl. ..... antara sub I dengan Ir.Pagoes Moenjantono Direktur Pembangunan P.L.N. Jl.Trunojoyo Blok M.I / 135 Keb. Baru, mengenai pembelian peralatan Luar Negeri dengan harga sebesar Rp.244.762.362.-- Bea Meterai cfm.ps.56 ABM 1921 ditetapkan 1 o/oo = Tindasan lainnya dibuat rangkap 13 a Rp.25.-- =	 Rp.244.775.-- " 325.--
Keterangan mengenai denda dengan menyebutkan dasar pengenaannya.		
HARUS DIBAYAR : 19 - J u n i - 1974.	Jumlah: Jakarta, 12 - J u n i - 1974. A.n. Kepala Inspeksi Pajak Jakarta Sel.Dua. Kasie P.T.L. (Nn. Ny. Sri Subiati).-	Rp.245.100.-- (Dua ratus empat puluh lima ribu seratus r[illegible]).-

TINDASAN PEMBAYARAN

Pentak KP.BM.3

apply individually to the equipment and materials Units 1 and 2; provided however, that the total amount of said liquidated damages shall not exceed ten per cent of that portion of the contract price for equipment and materials stated in Article II of this Contract Agreement which comprises the contract price for all of the equipment and materials for that Unit.

IN WITNESS WHEREOF, the parties hereto have executed this Contract Agreement as of the day and year first above written.

OWNER

PERUSAHAAN UMUM LISTRIK NEGARA

(Seal)

Attest _____ By: _____

Director for Construction.

CONTRACTOR

BAILEY METER COMPANY

(Seal)

Attest _____ By: _____

(PLN 6104)
(CONTROL AND INSTRUMENTS K-2A)
051074-1

E ECUTED I (7) COUNTERPARTS

BOND NO: 8064 81 84

PERFORMANCE BOND

(See Instructions on reverse)

PRINCIPAL (Legal name and business address) (Contractor)

BAILEY METER COMPANY
29801 Euclid Avenue
Wickliffe, Ohio 44092

TYPE OF ORGANIZATION ("X" one)

☐ INDIVIDUAL ☐ PARTNERSHIP
☐ JOINT VENTURE ☒ CORPORATION

STATE OF INCORPORATION: Delaware

SURETY(IES) (Name(s) and business address(es))

FEDERAL INSURANCE COMPANY
100 William Street
New York, N. Y. 10038

PENAL SUM OF BOND			
MILLION(S)	THOUSAND(S)	HUNDRED(S)	CENT(S)
	165	000	00

CONTRACT DATE	CONTRACT NO
If Known	

KNOW ALL MEN BY THESE PRESENTS, That we, the Principal and Surety(ies) hereto, are firmly bound to Perusahaan Umum Listrik Negara (hereinafter called PLN) in the above penal sum for the payment of which we bind ourselves, our heirs, executors, administrators, and successors, jointly and severally: *Provided* That, where the Sureties are corporations acting as co-sureties, we, the Sureties, bind ourselves in such sum "jointly and severally" as well as "severally" only for the purpose of allowing a joint action or actions against any or all of us, and for all other purposes each Surety binds itself, jointly and severally with the Principal, for the payment of such sum only as is set forth opposite the name of such Surety, but if no limit of liability is indicated, the limit of liability shall be the full amount of the penal sum.

THE CONDITION OF THIS OBLIGATION IS SUCH, that whereas the Principal entered into the contract identified above;

NOW, THEREFORE, if the Principal shall:

Perform and fulfill all the undertakings, covenants, terms, conditions, and agreements of said contract during the original term of said contract and any extensions thereof that may be granted by PLN, with or without notice to the Surety (ies), and during the life of any guaranty required under the contract, and shall also perform and fulfill all the undertakings, covenants, terms, conditions, and agreements of any and all duly authorized modifications of said contract that may hereafter be made, notice of which modifications to the Surety (ies) being hereby waived.

IN WITNESS WHEREOF, the Principal and Surety (ies) have executed this performance bond and have affixed their seals on the date set forth above.

PRINCIPAL			
Signature(s)	1. BAILEY METER COMPANY BY: T J Weigand (Seal)	2. (Seal)	Corporate Seal
Name(s) & Title(s) (Typed)	1. T. J. Weigand Controller	2.	

INDIVIDUAL SURETY(IES)		
Signature(s)	1. (Seal)	2. (Seal)
Name(s) (Typed)	1.	2.

CORPORATE SURETY(IES)					
SURETY A	Name & Address	Federal Insurance Co. 100 Wm. Street, New York, N. Y.	STATE OF INC. N. Jersey	LIABILITY LIMIT	Corporate Seal
	Signature(s)	1.	2.		
	Name(s) & Title(s) (Typed)	1. A. R. Dreyer Attorney-in-Fact	2.		

25-105

CORPORATE SURETY(IES) (Continued)					
SURETY B	Name & Address		STATE OF INC.	LIABILITY LIMIT	Corporate Seal
	Signature(s)	1	2		
	Name(s) & Title(s) (Typed)	1	2.		
SURETY C	Name & Address		STATE OF INC.	LIABILITY LIMIT	
	Signature(s)	1	2.		
	Name(s) & Title(s) (Typed)	1	2.		
SURETY D	Name & Address		STATE OF INC.	LIABILITY LIMIT	Corporate Seal
	Signature(s)	1	2		
	Name(s) & Title(s) (Typed)	1	2.		
SURETY E	Name & Address		STATE OF INC.	LIABILITY LIMIT	Corporate Seal
	Signature(s)	1.	2.		
	Name(s) & Title(s) (Typed)	1	2		
SURETY F	Name & Address		STATE OF INC.	LIABILITY LIMIT	Corporate Seal
	Signature(s)	1	2		
	Name(s) & Title(s) (Typed)	1	2		
SURETY G	Name & Address		STATE OF INC.	LIABILITY LIMIT	Corporate Seal
	Signature(s)	1	2.		
	Name(s) & Title(s) (Typed)	1	2.		

BOND PREMIUM	RATE PER THOUSAND	TOTAL
	$ 1.25	$ 206.00

INSTRUCTIONS

1. This form is authorized for use in connection with contracts for construction work or the furnishing of supplies or services. There shall be no deviation from this form without approval by PLN.

2. The full legal name and business address of the Principal shall be inserted in the space designated "Principal" on the face of this form. The bond shall be signed by an authorized person. Where such person is signing in a representative capacity (e.g., an attorney-in-fact), but is not a member of the firm, partnership, or joint venture, or an officer of the corporation involved, evidence of his authority must be furnished.

3. (a) Corporations executing the bond as sureties must be authorized to act as sureties. Where more than a single corporate surety is involved, their names and addresses (city and state) shall be inserted in the spaces (Surety A, Surety B, etc.) headed "CORPORATE SURETY (IES)", and in the space designated "SURETY (IES)" on the face of this form only the letter identification of the Sureties shall be inserted.

(b) Where individual sureties execute the bond, they shall be two or more responsible persons. A completed Affidavit of Individual Surety, for each individual surety, shall accompany the bond. Such sureties may be required to furnish additional substantiating information concerning their assets and financial capacility as PLN may require.

4. Corporations executing the bond shall affix their corporate seals. Individuals shall execute the bond opposite the word "Seal".

5. The name of each person signing this performance bond should be typed in the space provided.

Certified Copy of

POWER OF ATTORNEY

Know all Men by these Presents. That the FEDERAL INSURANCE COMPANY, 90 John Street, New York, New York, a New Jersey Corporation, has constituted and appointed, and does hereby constitute and appoint

T. V. Lenihan
R. E. McErlean
A. R. Dreyer
H. D. Gorton
M. E. Rosenbalm
Doreen Tardio
of
Cleveland, Ohio

each its true and lawful Attorney-in-Fact to execute under such designation in its name and to affix its corporate seal to and deliver for and on its behalf as surety thereon or otherwise, bonds of any of the following classes, to-wit:

1. Bonds and Undertakings (other than Fiduciary Bonds) filed in any suit, matter or proceeding in any Court, or filed with any Sheriff or Magistrate, for the doing or not doing of anything specified in such Bond or Undertaking, in which the penalty of the bond or undertaking does not exceed the sum of One Hundred Thousand Dollars ($100,000.00).
2. Surety Bonds to the United States of America or any agency thereof, including those required or permitted under the laws or regulations relating to Customs or Internal Revenue; License and Permit Bonds or other indemnity bonds under the laws, ordinances or regulations of any State, City, Town, Village, Board or other body or organization, public or private; bonds to Transportation Companies, Lost Instrument bonds, Lease bonds, Workmen's Compensation bonds, Miscellaneous Surety bonds and bonds on behalf of Notaries Public, Sheriffs, Deputy Sheriffs and similar public officials.
3. Bonds on behalf of contractors in connection with bids, proposals or contracts.

In Witness Whereof, the said FEDERAL INSURANCE COMPANY, has, pursuant to its By-Laws, caused these presents to be signed by its Assistant Vice-President and Assistant Secretary and its corporate seal to be hereto affixed this 1st day of January 19 73.

FEDERAL INSURANCE COMPANY

By

George McClellan
Assistant Vice President

John MacGregor
Assistant Secretary

STATE OF NEW YORK
County of New York } ss:

On this 1st day of January 1973, before me personally came John MacGregor, to me known and by me known to be Assistant Secretary of the FEDERAL INSURANCE COMPANY, the Corporation described in and which executed the foregoing Power of Attorney and the said John MacGregor being by me duly sworn, did depose and say that he resides in the City of Short Hills, in the State of New Jersey; that he is Assistant Secretary of the FEDERAL INSURANCE COMPANY and knows the corporate seal thereof; that the seal affixed to the foregoing Power of Attorney is such corporate seal and was thereto affixed by authority of the By-Laws of said Company and that he signed said Power of Attorney as Assistant Secretary of said Company by like authority; that he is acquainted with George McClellan and knows him to be Assistant Vice-President of said Company, and that the signature of said George McClellan subscribed to said Power of Attorney is in the genuine handwriting of said George McClellan and was thereto subscribed by authority of said By-Laws and in deponent's presence.

Acknowledged and Sworn to before me on the date above written

Notary Public
MARY K. BENDICK
NOTARY Public, State of New York
No. 24-0237960
Qualified in Kings County
Certificate filed in New York County
Commission Expires March 30, 1973

FORM 12474F (REV. 1-73)

L-3074 (16M)

CITY AND COUNTY OF NEW YORK: ss

I, the undersigned, Assistant Secretary of the FEDERAL INSURANCE COMPANY, do hereby certify that the following is a true excerpt from the By-Laws of the said Company as adopted by its Board of Directors on March 11, 1953 and amended May 27, 1971 and that this By-Law is in full force and effect.

"ARTICLE XVIII.

Section 2. All bonds, undertakings, contracts and other instruments other than as above for and on behalf of the Company which it is authorized by law or its charter to execute, may and shall be executed in the name and on behalf of the Company either by the Chairman or the Vice Chairman or the President or a Vice-President, jointly with the Secretary or an Assistant Secretary, under their respective designations, except that any one or more officers or attorneys-in-fact designated in any resolution of the Board of Directors or the Executive Committee, or in any power of attorney executed as provided for in Section 3 below, may execute any such bond, undertaking or other obligation as provided in such resolution or power of attorney.

Section 3. All powers of attorney for and on behalf of the Company may and shall be executed in the name and on behalf of the Company, either by the Chairman or the Vice-Chairman or the President or a Vice-President or an assistant Vice-President, jointly with the Secretary or an Assistant Secretary, under their respective designations."

And I further certify that I have compared the foregoing copy of the POWER OF ATTORNEY with the original thereof and the same is a correct and true copy of the whole of said original Power of Attorney and that said Power of Attorney has not been revoked.

And I further certify that said FEDERAL INSURANCE COMPANY is duly licensed to transact fidelity and surety business in each of the States of the United States of America, District of Columbia, Puerto Rico, and each of the Provinces of Canada with the exception of Prince Edward Island; and is also duly licensed to become sole surety on bonds, undertakings, etc., permitted or required by law.

Given under my hand and the seal of said Company at New York, N. Y., this 14th day of June, 19 74

C. Davis

Assistant Secretary

PERFORMANCE BOND

(See Instructions on reverse)

DATE BOND EXECUTED *(Must be same or later than date of contract)*

PRINCIPAL *(Legal name and business address)* (Contractor)

TYPE OF ORGANIZATION *("X" one)*

☐ INDIVIDUAL ☐ PARTNERSHIP

☐ JOINT VENTURE ☐ CORPORATION

STATE OF INCORPORATION

SURETY(IES) *(Name(s) and business address(es))*

PENAL SUM OF BOND

MILLION(S)	THOUSAND(S)	HUNDRED(S)	CENT(S)

CONTRACT DATE	CONTRACT NO.

KNOW ALL MEN BY THESE PRESENTS, That we, the Principal and Surety(ies) hereto, are firmly bound to Perusahaan Umum Listrik Negara (hereinafter called PLN) in the above penal sum for the payment of which we bind ourselves, our heirs, executors, administrators, and successors, jointly and severally: *Provided*, That, where the Sureties are corporations acting as co-sureties, we, the Sureties, bind ourselves in such sum "jointly and severally" as well as "severally" only for the purpose of allowing a joint action or actions against any or all of us, and for all other purposes each Surety binds itself, jointly and severally with the Principal, for the payment of such sum only as is set forth opposite the name of such Surety, but if no limit of liability is indicated, the limit of liability shall be the full amount of the penal sum.

THE CONDITION OF THIS OBLIGATION IS SUCH, that whereas the Principal entered into the contract identified above;

NOW, THEREFORE, if the Principal shall:

Perform and fulfill all the undertakings, covenants, terms, conditions, and agreements of said contract during the original term of said contract and any extensions thereof that may be granted by PLN, with or without notice to the Surety (ies), and during the life of any guaranty required under the contract, and shall also perform and fulfill all the undertakings, covenants, terms, conditions, and agreements of any and all duly authorized modifications of said contract that may hereafter be made, notice of which modifications to the Surety (ies) being hereby waived.

IN WITNESS WHEREOF, the Principal and Surety (ies) have executed this performance bond and have affixed their seals on the date set forth above.

PRINCIPAL

Signature(s)	1. *(Seal)*	2. *(Seal)*	*Corporate Seal*
Name(s) & Title(s) *(Typed)*	1.	2.	

INDIVIDUAL SURETY(IES)

Signature(s)	1. *(Seal)*	2. *(Seal)*
Name(s) *(Typed)*	1.	2.

CORPORATE SURETY(IES)

SURETY A	Name & Address		STATE OF INC.	LIABILITY LIMIT	*Corporate Seal*
	Signature(s)	1.	2.		
	Name(s) & Title(s) *(Typed)*	1.	2.		

25-105

CORPORATE SURETY(IES) (Continued)					
SURETY B	Name & Address		STATE OF INC	LIABILITY LIMIT	Corporate Seal
	Signature(s)	1	2		
	Name(s) & Title(s) (Typed)	1	2.		
SURETY C	Name & Address		STATE OF INC.	LIABILITY LIMIT	Corporate Seal
	Signature(s)	1	2.		
	Name(s) & Title(s) (Typed)	1	2		
SURETY D	Name & Address		STATE OF INC.	LIABILITY LIMIT	Corporate Seal
	Signature(s)	1	2.		
	Name(s) & Title(s) (Typed)	1	2.		
SURETY E	Name & Address		STATE OF INC.	LIABILITY LIMIT	Corporate Seal
	Signature(s)	1	2.		
	Name(s) & Title(s) (Typed)	1	2.		
SURETY F	Name & Address		STATE OF INC.	LIABILITY LIMIT	Corporate Seal
	Signature(s)	1	2.		
	Name(s) & Title(s) (Typed)	1	2.		
SURETY G	Name & Address		STATE OF INC.	LIABILITY LIMIT	Corporate Seal
	Signature(s)	1	2.		
	Name(s) & Title(s) (Typed)	1	2.		

BOND PREMIUM ▶	RATE PER THOUSAND $	TOTAL $

INSTRUCTIONS

1. This form is authorized for use in connection with contracts for construction work or the furnishing of supplies or services. There shall be no deviation from this form without approval by PLN.

2. The full legal name and business address of the Principal shall be inserted in the space designated "Principal" on the face of this form. The bond shall be signed by an authorized person. Where such person is signing in a representative capacity (e.g., an attorney-in-fact), but is not a member of the firm, partnership, or joint venture, or an officer of the corporation involved, evidence of his authority must be furnished.

3. (a) Corporations executing the bond as sureties must be authorized to act as sureties. Where more than a single corporate surety is involved, their names and addresses (city and state) shall be inserted in the spaces (Surety A, Surety B, etc.) headed "CORPORATE SURETY (IES)", and in the space designated "SURETY (IES)" on the face of this form only the letter identification of the Sureties shall be inserted.

(b) Where individual sureties execute the bond, they shall be two or more responsible persons. A completed Affidavit of Individual Surety, for each individual surety, shall accompany the bond. Such sureties may be required to furnish additional substantiating information concerning their assets and financial capacility as PLN may require.

4. Corporations executing the bond shall affix their corporate seals. Individuals shall execute the bond opposite the word "Seal".

5. The name of each person signing this performance bond should be typed in the space provided.

GENERAL CONDITIONS

Basis of Contract Award

X GC.1 CONTRACT DOCUMENTS. It is understood and agreed that the Invitation for Bids, Instructions to Bidders, Proposal, Proposal Data, Contract Agree-
XX ment, Performance Bond, ~~Payment Bond~~, General Conditions, Specifications, Drawings, Addenda, and Change Orders issued by the Owner or the Engineer, and specifications and engineering data furnished by the Contractor and accepted by the Owner, are each included in this Contract and the work shall be done in accordance therewith.

GC.2 DEFINITIONS. Words, phrases, or other expressions used in these contract documents shall have meanings as follows:

1. "Contract" or "contract documents" shall include the items enumerated above under CONTRACT DOCUMENTS.

2. "Owner" or "PLN" shall mean the Perusahaan Umum Listrik Negara, an Agency of the Ministry of Public Works and Power of the Government of the Republic of Indonesia named and designated in the Contract Agreement as "Party of the First Part", acting through its duly authorized agents. All notices, letters, and other communication directed to the Owner shall be addressed and delivered to:

   Director of Construction
   Perusahaan Umum Listrik Negara
   Jalan Sunan Ngampel 1
   Kebajoran Baru
   Jakarta, Indonesia
   Cable address: PLNPST Jakarta Indonesia

3. "Contractor", "Manufacturer", or "Supplier" shall mean the corporation, company, partnership, firm, or individual named and designated in the Contract Agreement as the "Party of the Second Part", who has entered into this Contract for the performance of the work covered thereby, and its, his, or their duly authorized representatives.

4. "Subcontractor" shall mean and refer only to a corporation, partnership, or individual having a direct contract with the Contractor for performing work covered by these contract documents.

5. "Engineer" shall mean the firm of Black & Veatch International, Consulting Engineers, 1500 Meadow Lake Parkway, (mailing address P.O. Box 8405), Kansas City, Missouri 64114, (or P.O. Box 3149 Jakarta, Indonesia) or its duly authorized agents.

X Added for Contract

XX Not included in contract

6. "USA" shall mean the United States of America.

7. "AID" shall mean the United States Government, Department of State, Agency for International Development or any successor agency of the United States Government.

8. "Date of contract", or equivalent words, shall mean the date written in the first paragraph of the Contract Agreement; that is, the date of final signature by PLN.

9. "Contract effective date" shall mean the date when an irrevocable letter of credit is established in a United States of America bank.

10. "Day" or "days", unless herein otherwise expressly defined, shall mean a calendar day or days of 24 hours each.

11. "The work" shall mean the equipment, supplies, materials, labor, and services to be furnished under the contract and the carrying out of all obligations imposed by the contract documents.

12. "Drawings" or "plans" shall mean all (a) drawings furnished by the Owner as a basis for proposals, (b) supplementary drawings furnished by the Owner to clarify and to define in greater detail the intent of the contract drawings and specifications, (c) drawings submitted by the successful bidder with his proposal, provided such drawings are acceptable to the Owner, (d) drawings furnished by the Owner to the Contractor during the progress of the work, and (e) engineering data and drawings submitted by the Contractor during the progress of the work, provided such drawings are acceptable to the Engineer.

13. Whenever in these contract documents the words "as ordered", "as directed", "as required", "as permitted", "as allowed", or words or phrases of like import are used, it shall be understood that the order, direction, requirement, permission, or allowance of the Owner or Engineer is intended only to the extent of judging compliance with the terms of the contract; none of these terms shall imply the Owner or the Engineer has any authority or responsibility for supervision of the Contractor's forces, such supervision and the sole responsibility therefor being strictly reserved for the Contractor.

14. Similarly the words "approved", "reasonable", "suitable", "acceptable", "proper", "satisfactory", or words of like effect and import, unless otherwise particularly specified herein, shall mean approved, reasonable, suitable, acceptable, proper, or satisfactory in the judgment of the Owner or Engineer, to the extent provided in "12" above.

X [redacted]

16. "Startup" shall mean the time period required to bring the steam-electric generating unit from an inactive condition, when construction is essentially complete, to the state ready for commercial operation. The startup period shall include preliminary inspection and check-out of equipment and supporting subsystems; trial operation of supporting equipment and subsystems; initial operation of the complete steam-electric generating unit; operation of the complete unit to obtain data, perform calibration and corrective work; shutdown, inspection and adjustment prior to obtaining commercial operating status.

17. "Initial operation" shall mean the first integral operation of the complete steam-electric generating unit with subsystems and supporting equipment in service or available for service.

18. "Commercial operation" shall mean the condition of operation in which the complete steam-electric generating unit is officially declared by the Owner to be available for continuous operation at variable loads up to and including rated capacity.

19. "Official acceptance" shall mean the Owner's written acceptance of all work performed under this Contract.

GC.3 EXECUTION OF CONTRACT. After appropriate AID approval, copies of the contract documents will be prepared by the Engineer. All copies will be submitted to the Contractor and the Contractor shall execute the Contract Agreement, insert executed copies of the required bonds and power of attorney, and submit all copies to the Owner. The date of contract on the contract forms shall be left blank for filling in by the Owner. The certification date on the power of attorney shall also be left blank for filling in by the Owner.

Copies of engineering data, special forms, or other documents furnished by the Contractor, which are required to be incorporated in the contract shall be supplied to the Engineer.

The Owner will execute all copies, and make distribution of one copy each to the Owner, Engineer, Contractor, and Surety.

X Deleted in accordance with Item 16 of Addendum 1

After receipt of the executed contract documents, the Engineer will prepare 17 additional copies of the documents for distribution to the Owner, Engineer, Contractor and AID.

GC.4 LEGAL ADDRESSES. The business address of the Contractor given in the Proposal is hereby designated as the place to which all notices, letters, and other communictions to the Contractor may be mailed or delivered. The address of the Owner appearing in Article GC.2 is hereby designated as the place to which all notices, letters, and other communications to the Owner may be mailed or delivered. The delivery by one party to the other party at an address so designated, or the depositing in any mail box regularly maintained by the post office, of any notice, letter, or other communication addressed to such address, postage prepaid, registered or certified mail, with return receipt requested, shall be deemed sufficient service thereof, and the date of said service shall be the date of such delivery or mailing. Either party may change the said address or addresses at any time by an instrument in writing delivered to the Engineer and to the other party. Nothing herein contained shall be deemed to preclude or render inoperative the service of any notice, letter, or communication upon either party personally.

GC.5 SCOPE AND INTENT OF CONTRACT DOCUMENTS. The specifications and drawings are intended to supplement but not necessarily duplicate each other. Any work exhibited in the one and not in the other shall be executed as if it had been set forth in both, so that the work will be constructed according to the complete design as determined by the Engineer.

Should anything necessary for a clear understanding of the work be omitted from the specifications and drawings, or should the requirements appear to be in conflict, the Contractor shall secure written instructions from the Engineer before proceeding with the work affected thereby. It is understood and agreed that the work shall be performed according to the contract documents.

GC.6 INDEPENDENT CONTRACTOR. The relationship of the Contractor to the Owner shall be that of an independent contractor.

X GC.7 ASSIGNMENT. The Contractor shall not assign the work, or any part thereof, without the previous written consent of the Owner, Engineer, and AID, nor shall he assign, by power of attorney or otherwise, any of the moneys payable under this Contract unless written consent of the Owner has been obtained. No right under this Contract nor claim for any money due or to become due hereunder shall be asserted against the Owner, or persons acting for the Owner, by reason of any so-called assignment of this Contract or any part thereof, unless such assignment has been authorized by the written consent of the Owner and AID. In case the Contractor is permitted to assign moneys due or to become due under this Contract, the instrument of assignment shall contain a clause subordinating the claim of the assignee to all prior liens for services rendered or materials supplied for the performance of the work.

X Refer to Item 17 of Addendum 1

X [illegible]

GC.9 REFERENCE STANDARDS. Reference to the standards of any technical society, organization, or association, or to codes of local or state authorities, shall mean the latest standard, code, specification, or tentative standard adopted and published at the date of taking bids, unless specifically stated otherwise.

GC.10 NO WAIVER OF RIGHTS. Neither the inspection by the Owner or Engineer or any of their officials, employees, or agents, nor any order by the Owner or Engineer for payment of money, or any payment for, or acceptance of, the whole or any part of the work by the Owner or Engineer, nor any extension of time, nor any possession taken by the Owner or its employees shall operate as a waiver of any provision of this Contract, or of any power herein reserved to the Owner, or any right to damages herein provided, nor shall any waiver of any breach in this Contract be held to be a waiver of any other or subsequent breach.

GC.11 AUTHORITY OF THE ENGINEER. To prevent delays and disputes, and to discourage litigation, it is agreed by the parties to this Contract that the Engineer shall determine all questions in relation to the work.

Duties of the Engineer with respect to the work performed under this Contract include, but are not necessarily limited to, the following: interpretation of the specifications and documents; review of engineering data submitted by the Contractor; witnessing tests of equipment and material prior to shipment as required; certification of the delivery of equipment and materials to the plant site; inspection and acceptance or rejection of equipment and materials delivered to the plant site; inspection and acceptance or rejection of equipment and materials during and upon completion of construction at the plant site; assisting the Owner in preparation and issuance of change orders; review of acceptance test procedures, schedules, and results; and final inspection of the completely installed equipment and materials.

If in the opinion of the Contractor a decision made by the Engineer is not in accordance with the meaning and intent of the contract, the Contractor may file with the Engineer, within 30 days after receipt of the decision, a written objection to the decision. Failure to file an objection within the allotted time will be considered acceptance of the Engineer's decision and the decision shall become final and conclusive.

The Engineer's decision and the filing of the written objection thereto shall be a condition precedent to the right to request arbitration or to start action in court.

X *Refer to Item 18 of Addendum 1.*

X [redacted]

GC.12 ENGINEERING INSPECTION. The Owner may appoint such inspectors as the Owner deems proper to inspect the materials furnished and the work performed for compliance with the drawings and specifications. The Contractor shall furnish all reasonable assistance required by the Engineer, or inspectors, for the proper inspection of the work.

The Contractor shall obey the directions and instructions of the Engineer or inspector when they are consistent with the obligations of this Contract. Should the Contractor object to any order given by any inspector, the Contractor may make written appeal to the Engineer for a decision.

Inspectors and other authorized representatives of the Owner or Engineer
XX shall be free at all times to perfor their duties. Any attempted interference of one of them by the Contractor or his employees shall be sufficient reason, if the Owner so decides, to terminate the contract.

Inspection of the work by the Engineer, or inspectors, will be performed at the factory of the manufacturer prior to shipment of the equipment and materials and at the Owner's plant site following delivery thereto. Procedures whereby the Contractor shall notify the Engineer a reasonable time in advance that the work or any part thereof is ready for inspection shall be established by agreement between the Engineer and the Contractor.

Inspection shall not relieve the Contractor from any obligation to perform the work strictly in accordance with the drawings and specifications. Work not so performed shall be removed and replaced by the Contractor at his own expense.

GC.13 RIGHT OF OWNER TO TERMINATE CONTRACT FOR CAUSE. If the work to be done under this Contract is abandoned by the Contractor; or if this Contract is assigned by him without the written consent of the Owner; or if the Contractor is adjudged bankrupt; or if a general assignment of his assets is made for the benefit of his creditors; or if a receiver is appointed for the
XXX Contractor or any of his property; or if at any time the ~~Engineer certifies in writing to the Owner that the performance of the~~ work under this Contract is being unnecessarily delayed, that the Contractor is violating any of the conditions of this Contract, or that he is executing the same in bad faith or otherwise not in accordance with the terms of said contract; or if the work is not substantially completed within the time named for its completion or within the time to which such completion date may be extended; then the Owner may serve written notice upon the Contractor and his surety of the Owner's intention to terminate this Contract. Unless within 30 days after the serving of such notice, a satisfactory arrangement is made for continuance, this Contract shall terminate. In the event of such termination, the surety shall have the right to take over and complete the work, provided

X *Deleted in accordance with Item 19 of Addendum 1.*

XX *Refer to Item 20 of Addendum 1.*

XXX *Revised in accordance with Item 21 of Addendum 1.*

that if the surety does not commence performance within 60 days, the Owner may take over and prosecute the work to completion, by contract or otherwise. The Contractor and his surety shall be liable to the Owner for all excess cost sustained by the Owner by reason of such prosecution and completion.

GC.14 HINDRANCES AND DELAYS. The Contractor expressly agrees that the period of time named in the Contract Agreement to complete all work includes allowance for all hindrances and delays incident to the work. No claim shall be made by the Contractor for hindrances, or delays from any cause during the progress of the work, except as provided under SUSPENSION OF WORK and FORCE MAJEURE.

GC.15 SUSPENSION OF WORK. The Owner reserves the right to suspend and reinstate execution of the whole or any part of the work without invalidating the provisions of the contract. Orders for suspension or reinstatement of work will be issued by the Owner to the Contractor in writing. The time for completion of the work will be extended for a period equal to the time lost by reason of the suspension.

Changes in Contractor's price or delivery schedules which occur during a period of suspension ordered by the Owner shall not affect this Contract except as agreed by the Owner and the Contractor. If the Contractor proposes to apply such changes to this Contract, he shall present his proposal to the Owner in writing. During the 60 day period from and after the receipt by the Owner of such written proposal, the Owner shall be permitted to reinstate the work without change. If the work is not reinstated during this 60 day period, the Owner and the Contractor shall agree upon reasonable and proper changes or the Owner may cancel the unshipped portion of the work.

Changes in delivery schedule shall mean extension of the scheduled time of delivery beyond the number of days of the suspension period.

Any necessary and demonstrable costs incurred by the Contractor as a result of suspension of work will be paid by the Owner, provided such costs are substantiated to the satisfaction of the Owner.

X GC.16 FORCE MAJEURE. Should the Contractor be delayed in the final completion of the work by any cause or causes outside of and beyond the control of the Contractor, such as but not limited to acts of a public enemy, war, blockages, insurrections, riots, epidemics, civil disturbances, strikes, fire, and other causes not within the control of the Contractor, which makes the performance of the contract unfeasible and which by the exercise of due diligence the Contractor in performance of the contract is unable to overcome, then an extension of time sufficient to compensate for the delay, as determined by the Engineer, shall be granted by the Owner, and the Contractor shall not be charged for liquidated damages for such delay; provided, however, that the Contractor shall give the Owner and the Engineer prompt notice in writing of the cause of delay in each case and shall demonstrate that he has used all reasonable means to minimize the delay.

X *Refer to Item 22 of Addendum 1.*

[illegible]

GC.17 DELAYED SHIPMENT. The Owner reserves the right to order (by written notice) the Contractor to delay shipment of equipment and materials herein contracted. In the event such a delay is ordered by the Owner the Owner will pay the Contractor reasonable and proper extra charges incurred by the Contractor as a result of the delay. Such extra charges shall include X storage charges, handling charges, insurance, ~~interest on investment~~, transportation charges to the storage facility, and preservation during storage. In the event storage is necessary, the Contractor shall be guided by the Owner's instructions in respect to the removal from storage and the arrangements for export shipment in accordance with the terms of the Contract.

GC.18 TERMINATION FOR THE CONVENIENCE OF THE OWNER. The Owner reserves the right to terminate and cancel this Contract in whole or in part at any time by written notice to the Contractor. In the event of such termination, the Contractor agrees to waive any claims for damages including loss of anticipated profits on account thereof. The Owner will pay to the Contractor reasonable and proper cancellation charges which are demonstrable to the satisfaction of the Owner. In the event of such termination, provisions of these contract documents relating to specific warranties and guarantees and to agreements to hold harmless or indemnify the other party to the Contract shall remain in full force and effect to the extent provided therein.

Upon receipt of notice of termination, the Contractor shall discontinue the work on the date and to the extent specified in the notice, make every reasonable effort to procure cancellation of all orders and subcontracts to the extent of their relationship to the work terminated and upon terms satisfactory to the Owner; halt all further purchasing or subcontracting activity applicable to the work terminated; and assist the Owner in maintenance, protection, and disposition of work already acquired by the Owner under this Contract.

GC.19 MODIFICATIONS. The Contractor shall modify the work whenever so ordered by the Owner and such modifications shall not affect the validity of the contract. Modifications may involve increases or decreases in the amount of the work for which appropriate contract price adjustment will be made.

X *Revised in accordance with Item 23 of Addendum 1.*

All modifications shall be made under the authority of duly executed change orders issued and signed by the Owner, approved by AID, and accepted and signed by the Contractor.

If modifications affect the delivery and completion schedule of the work, appropriate adjustments to the schedules will be made as provided for in the article FORCE MAJEURE and this article in these GENERAL CONDITIONS.

GC.19.1 Extra Work. Modifications which increase the amount of the work shall be paid for according to the amount actually done.

X Claims for extra work will not be paid unless the work covered by such claims was authorized in writing by the Owner or Engineer. The Contractor shall not have the right to prosecute or maintain either an arbitration proceeding or an action in court to recover for extra work unless the claim is based upon a written order from the Owner or Engineer. Payments for extra work will be based on lump sums plus a percentage allowance as agreed to by the Owner or Engineer and the Contractor before the extra work is started. The percentage allowance shall include the Contractor's extra profit and extra overhead and, unless otherwise agreed by the Contractor and the Owner or Engineer, the percentage allowance shall be 15 per cent of the total direct cost.

X For the purpose of determining whether proposed extra work will be authorized, the Contractor shall submit to the Engineer, for approval, a detailed fixed cost proposal for proposed extra work. The proposal shall show itemized quantities and charges for all elements of direct cost and a percentage allowance to cover extra profit and extra overhead. Unless otherwise agreed upon by the Contractor and the Owner or Engineer, the percentage allowance shall be 15 per cent of the total direct cost.

GC.19.2 Decreased Work. If a modification decreases the amount of work to be done, such decrease shall not constitute the basis for a claim for damages or anticipated profits on work affected by such decrease. The Engineer shall determine on an equitable basis the amount of (a) credit due the Owner for contract work not done as a result of an authorized change, (b) allowance to the Contractor for any actual loss incurred in connection with the purchase, delivery, and subsequent disposal of materials or equipment required for use on the work as planned and which could not be used in any part of the work as actually built, and (c) any other adjustment of the contract amount where the method to be used in making such adjustment is not clearly defined in the contract documents.

GC.20 ARBITRATION. Except as may otherwise be provided in this Contract, any dispute or difference arising under this Contract which cannot be settled by agreement between the parties to the dispute shall be submitted to arbitration in the manner specified herein.

X Refer to Item 24 of Addendum 1.

within 30 days from the date of failure to reach agreement as established by written notice by either party to the dispute to the other, each party to the dispute shall appoint an arbitrator. If the two arbitrators thus appointed fail to agree upon a decision and award within 30 days of the date of appointment of the second arbitrator, they shall select a third arbitrator by agreement. If either party to the dispute fails to appoint an arbitrator within the allotted time, or if the two arbitrators cannot agree upon a third arbitrator within 10 days, then the parties to the dispute, or either of them, shall apply to the Court of Arbitration of the International Chamber of Commerce, 38 Cour Albert Ier, Paris VIII for the appointments which have not been made as stated.

The arbitration proceedings shall be conducted in accordance with the Rules of Conciliation and Arbitration of the International Chamber of Commerce. The decision shall be by majority vote of the arbitrators and shall be final, conclusive, and binding upon the parties thereto. Each party shall bear the cost of its appointed arbitrator. The cost of the third arbitrator if one be appointed, shall be borne by the parties as the arbitrators may determine.

All arbitration proceedings shall be conducted in a location acceptable to both parties to the dispute.

Decision of the arbitrators shall be final and binding on the parties and an action to enforce the decision of the arbitrators may be instituted in any court of competent jurisdiction.

The Contractor shall not cause a delay of the work during any arbitration proceedings, except by agreement with the Owner. It is understood and agreed by the parties to the contract that no requirement or statement herein shall be interpreted as curtailing the power of the Engineer to determine the amount, quality, and acceptability of work and materials.

GC.21 LAWS AND REGULATIONS.

GC.21.1 Non-Indonesian Laws and Regulations. The Contractor shall observe and comply with all applicable ordinances, laws, and regulations in the locality where equipment may be manufactured. The Contractor shall protect and indemnify the Owner and the Owner's officers and agents against any claim or liability arising from or based on violation of such ordinances, regulations, or laws.

GC.21.2 Indonesian Laws and Regulations. If Contractor's personnel are required in Indonesia, the following stipulations shall apply.

The Contractor shall observe, comply with and respect Indonesian laws, rules and regulations and shall not interfere with Indonesian political or religious affairs either directly or indirectly. The Contractor shall comply with such other rules and regulations as the Owner and Engineer may establish from time to time with respect to the construction work and personnel employed by the Contractor.

The Contractor shall, in all dealings with labor in his employ, have due regard to all recognized festival days of rest and religious or other customs.

The Contractor shall not give or barter, or otherwise dispose of, to any person or persons, any arms or ammunition of any kind, or permit or suffer the same as aforesaid.

In the event of any outbreak of illness of an epidemic nature, the Contractor shall comply with and carry out such regulations, orders and requirements as may be made by the Government of Indonesia or the local medical or sanitary authorities, for the purpose of dealing with and overcoming the same.

GC.22 TAXES, PERMITS AND LICENSES.

GC.22.1 Non-Indonesian Taxes, Permits, and Licenses. The Contractor shall pay all sales, use, income and other taxes and duties, tariffs, and imports lawfully assessed against the Owner or the Contractor (excluding the Republic of Indonesia or any political subdivision thereof) in connection with the work included in this Contract. The Contractor shall obtain and pay for all USA or other non-Indonesian licenses, permits, and inspections required for the work including the cost of securing all export licenses and permits for materials, equipment, supplies and personnel exported from the USA or other country to Indonesia.

GC.22.2 Indonesian Taxes, Permits, and Licenses. The Contractor will be exempt from any import duties and charges levied by Indonesian law on the equipment and materials by virtue of the Owner's relevant exemption privileges. The exemption shall also include stamp duties imposed on the Contract. Any Indonesian taxes which the Contractor pays in order to perform the work under this Contract will be for the account of the Owner; however the Contractor shall not pay such taxes without the prior written approval of the Owner.

The Contractor and his non-Indonesian field personnel will be exempt from the payment of Indonesian income taxes on payments received under this Contract and from custom duties, harbor dues and other charges for importation of personal effects.

instruments, tools, machinery, and vehicles required for the performance of the work in Indonesia and imported on the condition that they will be exported at the completion of the work will be exempted from customs duties and other such charges.

GC.23 PATENTS. Royalties and fees for patents covering materials, articles, apparatus, devices, equipment, or processes used in the work, shall be included in the contract amount. The Contractor shall satisfy all demands that may be made at any time for such royalties or fees and he shall be liable for any damages or claims for patent infringements. The Contractor shall, at his own cost and expense, defend all suits or proceedings that may be instituted against the Owner for alleged infringement of any patents involved in the work and, in case of an award of damages, the Contractor shall pay such award. Final payment to the Contractor by the Owner will not be made while any such suit or claim
X remains unsettled. ~~The Contractor's liability for patent infringement is limited to patents held in the country in which the equipment is manufactured.~~

In the event any apparatus or equipment, or any part thereof furnished by the Contractor, is in such suit or proceedings held to constitute infringement, and its use is enjoined, the Contractor shall, at his option, and at his own expense, either: procure for the Owner the right to continue use of said apparatus, equipment, or part thereof; replace it with noninfringing apparatus or equipment; or modify it so it becomes noninfringing.

GC.24 MATERIALS AND EQUIPMENT. Unless specifically provided otherwise in each case, all materials and equipment furnished for permanent installation in the work shall conform to applicable standard specifications and shall be new, unused, and undamaged when installed or otherwise incorporated in the work. No such material or equipment shall be used by the Contractor for any purpose other than that intended or specified, unless such use is specifically authorized by the Owner in each case.

GC.24.1 Equivalent Materials and Equipment. Whenever a material or article is specified or described by using the name of a proprietary product or the name of a particular manufacturer or vendor, the specific item mentioned shall be understood as establishing the type, function, and quality desired. Other manufacturers' products will be considered provided sufficient information is submitted to allow the Engineer to determine that the products proposed are equivalent to those named.

GC.25 GUARANTEE. The Contractor guarantees that the work herein contracted will be as specified and will be free from defects in design, workmanship, and materials. If within the guarantee period the work fails to meet the

X *Deleted in accordance with Item 25 of Addendum 1.*

provisions of this guarantee, the Contractor shall promptly correct any defects, including nonconformance with the specifications, by adjustment,
X repair, or replacement of all defective parts or materials.

The guarantee period shall begin on the date of official acceptance, and shall end 12 months later.

If manufacturer's field representatives are included in the Contract, such supervision shall be furnished by the Contractor without cost for the correction of any defects.

The cost of all materials, parts, labor, transportation, supervision, special tools, and supplies required for replacement or repair of parts and for correction of defects shall be paid by the Contractor or by the surety.

This guarantee shall be extended to cover all repairs and replacements furnished under the guarantee and the period of the guarantee for each such repair or replacement shall be one year from the date of installation thereof.

If within 20 days after the Owner gives the Contractor notice of a defect, the Contractor neglects to make or undertake with due diligence to make the necessary corrections, the Owner is hereby authorized to make the corrections himself or order the work to be done by a third party, and the cost of the corrections shall be paid by the Contractor. The Owner will be permitted to make repairs or replacements on equipment without affecting the guarantee or without prior notice to the Contractor so long as the repairs or replacements involve the correct installation of replacement parts. The Owner shall also be permitted to adjust or test equipment as outlined in instruction manuals provided by the Contractor or as directed by the Contractor's erection or operating superintendent.

In the event of an emergency where, in the judgment of the Owner, delay would cause serious loss or damage, repairs or adjustments may be made by the Owner or a third party chosen by the Owner without advance notice to

X *Refer to Item 26 of Addendum 1.*

the Contractor and the cost of the work shall be paid by the Contractor, or by the surety. In the event such action is taken by the Owner, the Contractor will be notified promptly and shall assist wherever possible in making the necessary corrections.

GC.26 INSURANCE. The Contractor shall secure and maintain insurance of such types and in such amounts as may be necessary to protect himself and the interests of the Owner against all hazards or risks of loss as hereinafter specified. The form and limits of such insurance, together with the underwriter thereof in each case, shall be acceptable to the Owner but regardless of such acceptance it shall be the responsibility of the Contractor to maintain adequate insurance coverage at all times. Failure of the Contractor to maintain adequate coverage shall not relieve him of any contractual responsibility or obligation.

In the event of loss or damage to equipment and materials furnished under this Contract, the Contractor shall file all damage claims and shall be responsible for the replacement or repair of the work insured hereunder. Passage of title shall not relieve the Contractor of responsibility for loss or damage to the work.

The Contractor shall file with the Owner satisfactory certificates, or copies, of the policies providing the specified insurance. Certificates of insurance covering physical loss or damage to equipment and materials shall be submitted at least 60 days before the first shipment of the equipment and materials. A certificate for each of the other insurance policies shall be submitted at least 60 days prior to the arrival of the Contractor's personnel in Indonesia. Each certificate shall state that the Owner will be given 60 days written notice before the change, cancellation, or expiration of the included policies.

The workmen's compensation, automobile liability, and general liability insurance specified shall apply only to field services such as manufacturer's technical direction, field testing, and similar work not included as part of the normal manufacturing process.

GC.26.1 Workmen's Compensation and Employer's Liability. This insurance shall protect the Contractor against all claims under applicable workmen's compensation laws. The Contractor shall also be protected against claims for injury, disease, or death of employees which, for any reason, may not fall within the provisions of a workmen's compensation law. The policy covering workmen within the USA shall include an "all states" endorsement.

The liability limits shall not be less than the following:

Workmen's Compensation

Employees within the USA	Statutory
Personnel outside the USA who are US citizens, residents of the USA, or hired in the USA	Payments comparable to those provided by the Longshoremen's and Harbor Worker's Act (33 USC 901 et seq)
Other employees	Payments meeting at least the minimum legal requirements applicable by reason of the point of hiring and the site of the work
Employer's Liability (for all employees)	$100,000 each person

GC.26.2 Comprehensive Automobile Liability. This insurance shall be written in comprehensive form and shall protect the Contractor against all claims for injuries to members of the public and damage to property of others arising from the use of motor vehicles, and shall cover operation on or off the site of all motor vehicles licensed for highway use, whether they are owned, nonowned, or hired.

The liability limits per vehicle shall not be less than:

Bodily injury	$50,000 each person $100,000 each occurrence
Property damage	$100,000 each occurrence

GC.26.3 Comprehensive General Liability. This insurance shall be written in comprehensive form and shall protect the Contractor against all claims arising from injuries to members of the public or damage to property of others arising out of any act or omission of the Contractor or his agents, employees, or subcontractors or from strikes, riots, and civil commotions. In addition, this policy shall specifically insure the contractual liability assumed by the Contractor under the article entitled DEFENSE OF SUITS. The Contractor shall notify the Owner of any contractual liability assumed hereunder that is not insurable.

The policy shall insure all of the hazards incident to the work including, but not limited to, the hazards enumerated below whenever such hazards are involved in the Contractor's work:

(1) Premises - Operations

(2) Elevators and hoists

(3) Independent contractors (Contractor's protective liability insurance for protection against suits arising out of negligence of subcontractors.)

(4) Products including completed operations to be in force for one year after official acceptance of the work.

(5) Contractual liability

To the extent that any contractor's work calls for blasting, explosive or underground work, his comprehensive general liability insurance shall be written to eliminate explosion, collapse, and underground damage (XCU) exclusions.

The liability limits shall not be less than:

Bodily injury	$250,000 each person $500,000 each occurrence
Property damage	$500,000 each occurrence $500,000 aggregate

GC.26.4 Installation Floater. This insurance shall protect the Contractor, the Owner, and the Engineer from all insurable risks of physical loss or damage to materials and equipment while the materials and equipment are in transit from the Contractor's factory to the USA port of shipment; during storage and loading for ocean shipment; during unloading and storage at the receiving port; during loading and transit from the receiving port to the construction site; and until the equipment and materials are unloaded at the plant site, inspected, and received into custody of the Owner or his designated installation contractor or until 60 days from unloading at the port of Semarang, whichever shall first occur. It shall be of the "all risks" type, with coverages designed for the circumstances which may occur in the particular work included in this Contract. The coverage shall be for an amount not less than the insurable value of the equipment and materials CI&F at the site.

Installation floater insurance shall provide for losses to be payable to the Contractor, the Owner, and the Engineer as their interests may appear and shall contain a waiver of subrogation rights against the insured parties.

Installation floater insurance shall be coordinated with the ocean cargo insurance specified hereinafter to provide complete coverage of equipment and materials at all times until termination of the coverage as specified above.

Certificates of insurance covering installation floater insurance shall quote the insuring agreement and all exclusions as they appear in the policy; or in lieu of certificates, copies of the complete policy may be submitted.

GC.26.5 Ocean Cargo Insurance. This insurance shall insure and protect the insurable interests of the Contractor and the Owner against all insurable risks of physical loss or damage to equipment and materials while aboard an ocean going vessel in transit to the Owner. This insurance shall be written for all risks including but not limited to war, riot, strike, and civil commotion. Coverage shall be for an amount not less than the cost, insurance, and freight (CI&F) value of the equipment and materials.

In the event the Contractor elects, or is directed by the Owner, to ship equipment and materials by aircraft, insurance providing coverage equivalent to that specified above for ocean cargo shall be provided.

GC.26.6 Other Insurance. The Contractor shall secure and maintain such other insurance coverage as may be required to protect against perils and legal liabilities not covered under the foregoing coverages.

GC.27 TRANSFER OF TITLE. The title of ownership for equipment and material furnished fob port of shipment under this Contract shall be passed to the Owner at the time the equipment and material are actually loaded free on board cargo vessels at the port of shipment. This transfer of title shall not be construed to mean an acceptance of the equipment and materials; the Contractor shall continue to be responsible for the quality and performance of such equipment and materials, and for their compliance with the specifications, until final acceptance of the work and the fulfillment of the guarantee provisions of this Contract.

Transfer of title shall not relieve the Contractor from responsibility for all risk of loss or damage to the equipment and materials as specified under the article INSURANCE in these GENERAL CONDITIONS.

GC.28 DEFENSE OF SUITS. In case any action in court is brought against the Owner or Engineer, or any officer or agent of either of them, for the failure, omission, or neglect of the Contractor to perform any of the covenants, acts, matters, or things by this Contract undertaken; or for injury or damage caused by the alleged negligence of the Contractor or his subcontractors or his or their agents, or in connection with any claim based on lawful demands of subcontractors, workmen, material men, or suppliers; the Contractor shall indemnify and save harmless the Owner and the Engineer and their officers and agents, from all losses, damages, costs, expenses, judgments, or decrees arising out of such action.

GC.29 RELEASE OF LIABILITY. Acceptance by the Contractor of the last payment shall be a release to the Owner and every officer and agent thereof, from all claims and liability hereunder for anything done or furnished for, or relating to the work, or for any act or neglect of the Owner or of any person relating to or affecting the work.

The last payment by the Owner to the Contractor shall constitute final acceptance of all work performed under this Contract and shall be a release to the Contractor and his surety from all contractual liabilities and responsibilities to the Owner except those liabilities and responsibilities assumed under the article entitled GUARANTEE in these GENERAL CONDITIONS.

GC.30 CLAIMS FOR LABOR AND MATERIALS. The Contractor shall indemnify and save harmless the Owner from all claims for labor and materials furnished under this Contract. When requested by the Owner, the Contractor shall submit satisfactory evidence that all persons, firms, or corporations who have done work or furnished materials under this Contract, for which the Owner may become legally liable, have been fully paid or satisfactorily secured. In case such evidence is not furnished or is not satisfactory, an amount will be retained from money due the Contractor which in addition to any other sums that may be retained will be sufficient, in the opinion of the Owner, to liquidate all such claims. Such sum will be retained until the claims as aforesaid are fully settled or satisfactorily secured.

GC.31 CONTRACTOR'S PRICE BREAKDOWN. The Contractor shall prepare and submit to the Engineer for approval a breakdown of the contract price according to the system of accounts provided by the Owner. The Contractor's price breakdown shall be submitted to and approved by the Engineer before any payments are made under this Contract. Each invoice submitted for payment shall be prepared in accordance with the price breakdown approved by the Engineer.

The sum of the items listed in the Contractor's price breakdown shall equal the contract lump sum price or prices. Overhead and profit shall not be listed as separate items.

An unbalanced breakdown estimate providing for overpayment of the Contractor on items of work which would be performed first will not be accepted.

GC.32 PAYMENTS. Payment for the work included in this Contract will be made in accordance with the requirements stated herein and the payment rules in Section 6.3 of AID Capital Projects Guidelines "Borrower Procurement of Equipment and Materials" M.O. 1442.3.

GC.32.1 Dollar Payments. The Owner will establish, in favor of the Contractor, an irrevocable Letter of Credit in a USA bank covering the total dollar price of the equipment and materials plus export shipping expenses plus the dollar portion of the services provided by the Contractor in Indonesia if such services are required by this Contract.

In accordance with AID regulations, the Contractor may designate the USA bank to issue the Letter of Credit in his favor, provided that this designation is made prior to approval of the Contract by AID and provided that the contract amount is $25,000 or more. If the Contractor designates a bank other than the bank which the Owner has selected to receive the AID Letter of Commitment, the Contractor shall pay the additional bank charges incurred.

GC.32.1.1 Dollar Payments for Equipment, Materials, Freight, and Insurance. All requests for dollar payment for equipment, materials, freight and insurance, excepting final payment, shall be submitted to the bank holding the Letter of Credit and shall include the following documentation:

a. Completed General Accounting Office Standard Form 1034, "Public Voucher for Purchase and Services Other Than Personal".

b. The Contractor's commercial invoice. Each invoice shall be marked "paid" by the Contractor except for equipment and materials of USA source and origin in which case the bank will certify by endorsement on or attached to the invoice that payment has been made.

c. AID Form 1440-3, Contractor's Certificate and Agreement with the Agency for International Development, Contractor's Invoice and Contract Abstract, executed in accordance with the instructions thereon. The insurer or carrier is not required to execute a copy of this form.

d. The following certification, signed and dated by the Contractor:

> The undersigned certifies that (1) the sales value of the equipment covered by this invoice; plus the value of equipment already delivered; plus the sales value of engineering services, labor, and purchased material for which expenditures have been made; plus the amount expended on account of commitments for equipment remaining to be supplied under the subject contract, are not less than the total payment already received or claimed against this Contract, including payments claimed under this invoice; and (2) it is complying with the terms and conditions of the subject contract.

e. Shipping documentation consisting of:

> Bill of lading or substitute commercially acceptable document such as copy of ocean or charter party bill of lading, arriving bill, or parcel post receipt. The bill of lading must indicate the carrier's statement of charges.
>
> If shipment is from free port or bonded warehouse in Indonesia, a copy of the bill of lading covering shipment from the source to the free port or bonded warehouse and a delivery receipt evidencing release from the free port or bonded warehouse shall be submitted. The date of the delivery receipt will be considered as the shipment date.
>
> If the equipment and materials are procured from sources within AID Geographic Code 941, excluding the USA, and shipment is made on a liner vessel bearing the flag of a country within AID Geographic Code 941, excluding the USA, the bill of lading submitted must contain a certification signed by the carrier that a copy of the carriers applicable freight rate tariff has been filed with the Resources Transportation Division, AID.

The number of copies required of the above documentation will be determined later. The AID Loan Number 497-H-024 shall appear on all documents.

GC.32.1.2 Dollar Payments for Field Services. All requests for payment of the dollar portion of the Contractor's field services in Indonesia shall be submitted to the bank holding the Letter of Credit and shall include the following documentation:

a. Contractor's invoice describing the services performed, identifying the covering contract and the sections thereof which provide for such payment and the terms of payment. The invoice must be accompanied by written approval of the Engineer and Owner consenting to the payment of the invoice.

b. The following certification attached to, or endorsed on, the Contractor's invoice:

> "The undersigned certifies that the costs reimbursable to the Contractor and the amount payable to the Contractor in accordance with the terms of the contract, up to the date of this certificate, are not less than the total payments received or claimed by the Contractor under the contract (including the payment claimed under this invoice), and that the Contractor has fully complied with the terms and conditions of the contract, including the plans and specifications."

c. AID Form 1440-3, Contractor's Certificate and Agreement with the Agency for International Development, Contractor's Invoice and Contract Abstract, executed in accordance with the instructions thereon.

The number of copies required of the above documentation will be determined later. The AID Loan Number 497-H-024 shall appear on all documents.

GC.32.2 Rupiah Payments. If payments in rupiahs for a portion of the work is included in this Contract, requests for payments under the rupiah portion of this Contract shall include the following documentation:

a. The Contractor's invoice. The invoice shall show the
X value of the rupiah portion of the work. *The Contractor shall submit an invoice showing the rupiah cost for administrative expenses*

b. The following certification, signed and dated by the Contractor:

> I (we) hereby certify that the equipment and materials invoiced herein or covered by the attached invoice were mined, grown, or produced in _____(eligible source country) and that any produced equipment and materials were manufactured, processed, or assembled into

X *Added for contract.*

equipment and materials substantially different in basic characteristics or in purpose or utility from any imported components.

I (we) further certify that to the best of my (our) information and belief none of such equipment and materials contain components imported from other than free world (A.I.D. Geographic Code 935) countries.

The number of copies required of the above documentation will be determined later. The AID Loan Number 497-H-024 shall appear on all documents.

X

GC.32.3 Local Currency Needs. It is a requirement of AID that all local rupiah costs of the contract be paid in Indonesian Rupiahs. Dollar payments will not be made from the AID loan for that portion of the contract except

XX ~~as provided for under the AID Capital Projects Guidelines M.O. 1442.2 and M.O. 1442.3.~~

Whenever it is necessary for the Contractor, or personnel employed by him, to convert USA Dollars to Indonesian Rupiahs arrangements for such conversion shall be made through the US Disbursing Officer or the AID Jakarta Mission Controller as appropriate or as otherwise directed by the US Disbursing Officer.

~~Payments for any Indonesian tax or contribution will not be made from the AID loan.~~

GC.32.4 Equipment and Materials Payment Schedule. Payment for the equipment and materials portion of this Contract will be made in accordance with the following schedule:

75% pro rata per shipment due fob ocean vessel. If shipment cannot be made due to force majeure conditions, payment will be made against Contractor's invoice and warehouse receipt.

15% Pro rata per shipment due upon Engineer's and Owner's certification of receipt of shipment at the Owner's plant site, but in no event later than six months after shipment from the factory or storage of the equipment

10% as provided hereinafter under Final Payment

100% of expenses incidental to export of the equipment including insurance, freight, and storage charges will be paid against Contractor's invoice and evidence of export or storage.

XX Deleted in accordance with Item 27 of Addendum 1.

X Insert the following for contract:

GC.32.2.1 Administrative Expenses . One hundred per cent (100%) of administrative expenses shall be paid immediately upon signing of the Contract.

GC.32.5 Field Services Payment Schedule. The Contractor shall prepare and submit requests for payment for the dollar and rupiah portions of the Contract relating to the Contractor's field technical advisers, service and training personnel in Indonesia each month to the Engineer. Upon approval of the request for payment by the Engineer and the Owner, the Owner will pay the rupiah value of the work performed during the preceding month not later than 60 days after receipt of the approved invoice; the invoices for the dollar portion of the work will be returned to the Contractor with the Engineer's and Owner's approval for presentation by the Contractor to the bank holding the Letter of Credit.

Separate requests for payment shall be submitted for the dollar and rupiah portions of the erection work. Payment in dollars will be made against the Letter of Credit. Payment in rupiahs will be made in Indonesia by the Owner.

GC.32.6 Final Payment. Upon official approval and acceptance of the work by the Owner, the Contractor shall prepare and submit to the Engineer, final invoices.

The invoices shall include the 10 per cent retainage of the contract prices for equipment and materials adjusted according to the provisions of this Contract. Subject to the Engineer's approval and certification, such final invoices will be submitted to the Owner within 60 days of the Engineer's receipt thereof; and the Owner will within 60 days after said final invoices are certified forward the final invoices and all other required documentation to the bank holding the Letter of Credit for payment to the Contractor.

Official acceptance will not be made until all work specified in the contract documents has been completed, all required inspections have been made, an acceptable performance test has been completed and the unit has attained commercial operation; however, at the option of the Owner, official acceptance may be made upon the satisfactory completion of an acceptance test performed after initial operation. Final payment will not be made until official acceptance is made by the Owner and all required certifications have been received, and a release of all claims against the Owner has been submitted.

In the event the Owner does not give official approval and acceptance of the work within 36 months after the date the shipment of equipment and materials from the factory was complete because of any cause which is beyond the Contractor's control, the final payment will be made in the manner as stipulated above providing the equipment and materials are in accordance with the specifications as far as can be determined.

X GC.33 BEGINNING, PROGRESS, AND TIME OF COMPLETION OF WORK. Unless otherwise specified the Contractor shall begin work under this Contract within 10 days after receipt of a Letter of Intent from the Owner to be followed by the establishment of an irrevocable Letter of Credit in a mutually acceptable USA bank for the USA Dollar value of this Contract. The rate of progress shall be such that the work will be completed in accordance with the schedule named in the Contract Agreement. The Contractor shall furnish the Engineer a detailed schedule setting forth the procedure he proposes to follow and giving the dates he expects to start and to complete separate portions of the work. If in the opinion of the Engineer proper progress is not being maintained, changes shall be made in the Contractor's operations to assure proper progress.

GC.34 LIQUIDATED DAMAGES. The term "Unit" used hereinafter and in the Contract Agreement shall be understood to mean either Unit 1 or 2 including the specified accessories of either unit of the Semarang Steam Power Plant as applicable; it shall not be construed to mean the individual items of equipment which are furnished under this Contract.

Liquidated damages as specified herein and in the Contract Agreement shall apply to each unit individually, not collectively to both units. The term contract price used in the limitation of the maximum amount of liquidated damages shall be understood to mean the contract price of the equipment for the designated unit, not the aggregate contract price of equipment for both Units 1 and 2, except if an item of equipment is common to both units.

Liquidated damages to certain categories of equipment and materials are not specified in the Contract Agreement on a generating unit basis in which case the liquidated damages will be assessed on the basis specified in the Contract Agreement.

It is understood and agreed that time is of the essence of the contract. Should the Contractor fail to complete delivery of the equipment and materials included in this Contract within the time period or periods stipulated in the Contract Agreement after due allowance for any extensions of time which may be granted under the provisions of these contract documents, the Contractor shall pay to the Owner, as stipulated liquidated damages and not as a penalty, the amount of liquidated damages stated in the Contract Agreement for each day of default. The total amount of liquidated damages assessed for failure to comply with the specified delivery schedule shall not exceed 10 per cent of the contract price for the equipment and materials excluding ocean freight, insurance, and port surcharges.

The Owner shall have the right to deduct the liquidated damages from any moneys in its hands or otherwise due, or to become due, to the Contractor, or to sue for and recover compensation for such liquidated damages.

X *Refer to Item 28 of Addendum 1.*

If the Engineer certifies that the failure to complete the delivery within the time herein agreed upon is directly due, in whole or in part, to inability of the Contractor to clear equipment and materials through Indonesian customs as a result of decision of the Owner in accordance with Article GC.22.2 not to permit the Contractor to pay Indonesian taxes, the Contractor will not be liable for liquidated damages to the extent that such damages are due to such inability to clear customs.

GC.35 AID PROCUREMENT SOURCE AND ORIGIN REQUIREMENTS. The Contractor shall comply with the following AID requirements.

GC.35.1 Geographic Source Provisions. All equipment, materials, and other commodities furnished under this Contract shall have their source and origin from countries designated as eligible in AID Geographic Code 941.

"Origin" shall mean the country in which such equipment or material was mined, grown, or produced through manufacturing, processing, or assembly. "Source" shall mean the country or territory from which such equipment or material is shipped to Indonesia; except that when the equipment or materials are shipped to Indonesia from a free port or bonded warehouse in the form in which received therein, "source" shall mean the country or territory from which the equipment or material was shipped to such free port or bonded warehouse.

A produced commodity shall be deemed of country origin if as a result of manufacturing, processing, or assembly in such country, a commercially recognized new commodity is produced that is substantially different in basic characteristics or in purpose or utility from any of its imported components.

Equipment and materials which are normally imported into Indonesia and stocked therein in the form in which imported to meet a general demand in Indonesia for the item, shall be deemed as being of Indonesian source and origin.

No produced commodity shall be eligible for AID financing if it contains components from a Communist Bloc country. (A country not specified in AID Geographic Code 935).

No produced commodity shall be eligible for AID financing if such commodity contains any components which were imported into the producing country and such components were acquired by the producer in the form in which they were imported; and the total cost of such components (delivered at the point of production) amounts to more than 50 per cent of the lowest price (excluding the cost of ocean transportation and marine insurance) at which the supplier makes the commodity available for export sale, whether or not financed by AID. Indonesian source goods and services are ineligible for AID financing with the exception of insurance and certain commissions as set forth in the AID Guidelines.

No produced commodity shall be eligible for AID financing if such commodity has been transported to Indonesia by: a transportation medium owned, operated, or under the control of any Communist Bloc country; a vessel which AID, by written notice to the Owner, has designated as ineligible; or under any ocean or air charter which has not received prior approval by AID.

GC.36 BOOKS AND RECORDS. The Contractor shall maintain adequate books and records covering all transactions under or in connections with this Contract. The books and records shall be maintained for a period of not less than 3 years after the date of final payment under this Contract. The books and records shall be available for inspection and audit by the Owner and/or AID to insure compliance with the requirements of this Contract. If the Contract is for a fixed price, an audit as to cost will not be performed except for cost reimbursable items; however, they will be subject to audit for compliance with source and origin, transportation, and comparable requirements.

GC.37 LEGAL EFFECT OF CERTAIN AID APPROVALS AND DECISIONS. The parties hereto understand that AID has reserved certain approval rights including but not limited to, the right to approve the terms of this Contract, the Contractor, and any or all plans, reports, specifications, subcontracts, bid documents, drawings, or other documents related to this Contract and the project of which it is part. The parties hereto further understand and agree that AID, in reserving any or all of the foregoing approval rights, has acted solely as a lender to assure the proper use of United States Government funds, and that any decision by AID to exercise or refrain from exercising these approval rights shall be made as a lender in the course of financing the project and shall not be construed as making AID a party to the contract. The parties hereto understand and agree that

AID may, from time to time, exercise the foregoing approval rights, or discuss matters related to these rights and the project of which this Contract is part, with the parties jointly or separately, without thereby incurring any responsibility or liability to the parties jointly or to any of them.

Any approval or failure to disapprove by AID of any plan, report, specification, contract, bid document, drawing or other documents shall not bar the Owner or AID from asserting any right or relieve Contractor of any liability which Contractor might otherwise have to the Owner or AID, because of such plan, specification, contract, bid document, drawing or other document, or any performance or failure of performance thereunder, or under any AID Contractor's or supplier's certificate.

GC.38 INELIGIBLE FIRMS. No equipment, material, or service shall be furnished under this Contract by any firm on the list of suspended, debarred, or ineligible firms maintained by AID. No USA firm or any other firm which is more than 50 per cent beneficially owned by a USA firm shall furnish equipment, materials, or services under this Contract if the USA firm is not in compliance with its equal employment opportunity obligations under Executive Order 11246, as amended and orders issued thereunder.

GC.39 COMMUNIST BLOC MATERIALS. No equipment, materials, or services, except ocean freight in connection with equipment and materials which are not AID financed, shall be furnished under this Contract if the source and origin thereof is a Communist Bloc country. A Communist Bloc country is defined as a country excluded from the Free World as specified in AID Geographic Code 935.

GC.40 SHIPPING. Not less than 50 per cent of the gross tonnage of equipment and materials furnished under this Contract shall be transported by privately owned USA flag commercial vessels to the extent that such vessels are available at fair and reasonable rates for USA flag vessels. The Contractor shall furnish documentation regarding the nationality of the vessels used to transport the equipment and materials.

The costs of ocean transportation and related delivery services will not be eligible for AID financing if the shipment is made:

a. On a carrier under the flag of a country not included in AID Geographic Code 941, unless shipment on such carrier has been approved by AID prior to shipment.

b. On a carrier under the flag of the Republic of Indonesia

c. On any carrier designated by written notice to the Owner as ineligible by AID

d. Under any charter covering full or part cargo which has not received prior approval by AID.

e. On any carrier owned, operated, or under the control of any Communist Bloc country.

GC.41 DIVERSION RIGHTS. AID reserves certain diversion and vesting rights to the extent and as provided under the Loan Agreement, Letters of Implementation, and other related documents. These rights may be exercised at the option of AID in the event of default by the Owner of agreements with AID which are not remedied, if an extraordinary situation shall arise which makes it improbable that the purposes of the loan will be attained or that the Owner will be able or willing to perform its obligations under AID agreements, or if disbursement by AID would be unlawful. The diversion and vesting rights include, among others, the provision that AID may direct the transfer of title to AID of goods financed by AID, provided the goods are from a source outside Indonesia, are in deliverable condition, and have not been off-loaded in Indonesia. In the event of exercise of these rights, the Contractor shall abide by the instructions of AID relative thereto.

GC.42 GOVERNMENTAL AUTHORIZATIONS. The Owner will assist the Contractor in obtaining any required authorizations for re-exporting tools, equipment, test equipment, unused materials, and the like, all of which are and remain the property of the Contractor, from Indonesia at the conclusion of the work. The Contractor will be required to re-export all of his equipment from Indonesia at the conclusion of his technical services. Any such materials which are to be retained or sold in Indonesia shall be disposed of in accordance with the regulations of the Government of Indonesia.

The Contractor, pursuant to its agreement to arrange for the USA export shipment on behalf of the Owner, will apply for any required export license. Whoever is the proper party under the applicable regulations shall make prompt application for any preference rating or other USA governmental authorizations which may be required to permit the manufacture of the equipment. The parties shall assist each other in every manner reasonably possible in securing such authorizations as may be required.

GC.43 CUSTOMS CLEARANCE. The Owner will be responsible for Indonesian customs clearance of all equipment and materials furnished under this Contract. Customs clearance will take place at the Port of Semarang, at the

international airport at Jakarta, or other appropriate port. All customs duties, taxes, and license fees necessary for such clearance will be for the account of the Owner.

It is contemplated that large amounts of equipment, materials, supplies, tools, etc. will be loaded overside ship directly onto barges. The Contractor shall furnish to the Owner and Engineer, necessary documentation so that prior arrangements can be made with customs officials for expeditious off loading from ocean going vessels into barges. Where necessary the Owner will arrange for unloading under customs bond to barges in order to facilitate ocean vessel unloading.

Documentation for customs clearance shall be submitted at least three weeks prior to the anticipated arrival of equipment and materials in Indonesia. Ten copies of the following documents shall be submitted to the Owner and two copies shall be submitted to the Engineer:

Bill of Lading
Packing List
Insurance Certificate
Invoice

The above documents shall be prepared in accordance with the applicable requirements of Article GC.32.1.1.

After customs clearance by the Owner and release of the goods by customs officials, the Owner will be responsible for transport from Semarang Harbor by barge, rail or truck to the site.

Tools and equipment for use during construction supervision but which are to remain the property of the Contractor and which are to be re-exported by the Contractor from Indonesia at the conclusion of the work shall be carefully documented and specially listed to facilitate both import and export. The Contractor shall determine prior to shipment the customs regulations applicable to this special case as well as normal import rules and regulations applicable.

GC.44 IMPORTED PERSONNEL. The Contractor shall submit to the Owner data on all personnel he intends to bring into Indonesia for the performance of the work. These data shall include the name and present address of each person, his intended assignment and responsibility in connection with the work, and a concise resume of his experience in the type of work to which he will be assigned. These data shall be submitted not later than 60 days prior to their expected arrival in Indonesia.

The Owner will review the information submitted and advise the Contractor of the suitability of the personnel listed. Any personnel found to be unsatisfactory to the Owner shall be replaced with personnel satisfactory to the Owner. The Owner's approval must be secured prior to withdrawal of any non-Indonesian personnel assigned to the work. Requests for withdrawal shall include the reasons for withdrawal, the duration of the withdrawal, or alternatively, data on the replacement personnel to be imported by the Contractor. If at any time after arrival of non-Indonesian personnel, the Owner shall notify the Contractor that any of them are in the Owner's opinion unsatisfactory, such persons shall be withdrawn and replacements satisfactory to the Owner shall be provided at the Contractor's expense.

Any expenses associated with illness of the Contractor's personnel, including replacement thereof, shall be at the Contractor's expense.

Costs of passports, visas, travel documents, inoculations and other incidental expenses incurred by the Contractor s non-Indonesian employees and their dependents occasioned by travel to and from Indonesia shall be borne by the Contractor.

The Owner will not furnish living quarters for the Contractor's personnel and families. The Contractor's employees may import for their personal use a reasonable quantity of household goods and personal effects. These goods will be exempt from import duties and taxes provided those not consumed are re-exported. The Owner will be the sole judge as to what constitutes a reasonable quantity based upon the rules and regulations of the Government of Indonesia. The non-Indonesian employees may import one automobile per family for their personal use exempt from import duties and taxes provided it is re-exported.

X The expatriate personnel of the Contractor shall respect all Indonesian laws, rules, and regulations and shall not interfere with Indonesian political or religious affairs either directly or indirectly and shall comply with such other rules and regulations as the Contractor, Owner or Engineer may establish from time to time with respect to the expatriate personnel employed by the Contractor. The expatriate personnel of the Contractor shall work and live in harmony with their co-workers (both expatriate and Indonesian) employed on the work and at all times conduct themselves in an orderly manner. The expatriate personnel shall not engage, directly or indirectly, in any other employment, service, or business whatever, including dealings in real estate, nor shall they take part in local politics.

All expatriate personnel of the Contractor under this Contract shall be citizens or residents of a non-Indonesian Code 941 country, shall remain employees of the Contractor, and shall receive their salaries and allowances

X Refer to Item 29 of Addendum 1.

directly from the Contractor. With regard to citizens or residents of the USA, the Contractor agrees not to discriminate against any employee or applicant for employment by reason of race, color, creed, sex or national origin in carrying out this Contract.

GC.45 REPORTING, SHIPPING, AND CLEARING DOCUMENTS. The Contractor shall provide all official forms and documentary information as shall be needed to satisfy the AID Loan.

GC.46 AID APPROVAL. This Contract and any amendment, modification, or assignment thereof shall not be effective unless and until approved by AID. Modifications not approved by AID will not be financed by AID.

GC.47 TERMINATION. Unless otherwise terminated under the provisions of the articles entitled RIGHT OF OWNER TO TERMINATE CONTRACT and TERMINATION FOR THE CONVENIENCE OF THE OWNER, this Contract shall be deemed terminated at the expiration of the guarantee period as provided for under the article entitled GUARANTEE.

GC.48 RELEASE OF INFORMATION. The Contractor shall not communicate or use in advertising, publicity, or sales releases, photographs or other reproductions of the work under this Contract, or descriptions of the size, dimensions, quantity, quality, or other information concerning the work unless prior written permission has been obtained from the Owner.

GC.49 AID GEOGRAPHIC CODES.

GC.49.1 AID Geographic Code 941 - Selected Free World. The United States (001 and 002), and any other independent country in the Free World*, excluding the cooperating country itself and the following:

Algeria	Greece	Netherlands
Andorra	Hong Kong	New Zealand
Australia	Iceland	Norway
Austria	Iraq	Portugal
Belgium	Ireland	Qatar
West Berlin	Israel	San Marino
Canada	Italy	Somali Republic
Cyprus	Japan	South Africa, Rep. of
Denmark	Kuwait	XX ~~South~~ Yemen *(Adan)*
United Arab Republic (formerly Egypt)	Libya	Southern Rhodesia
	Liechtenstein	Spain
Finland	Luxembourg	Syria
France	Malta	Sweden
Germany, Fed. Rep.	Monaco	Switzerland

* "Free World" excludes communist countries or countries under communist domination, i.e., Union of Soviet Socialist Republics, Eastern Europe, Poland, North Viet Nam, North Korea, Mainland China, and other Chinese Communist-controlled areas, Outer Mongolia and Cuba.

XX Revised in accordance with Item 30 of Addendum 1.

United Arab Emirates
United Kingdom
Vatican City
Yugoslavia

GC.49.2 AID Geographic Code 935 Special Free World. Any area or country in the Free World, including the cooperating country itself.

Countries excluded from the Free World are as follows:

- Cuba
- China (Mainland) and Other Chinese Communist-Controlled Areas, including
  - Manchuria
  - Inner Mongolia
  - Tsinghai Province
  - Sikang Province
  - Sinkiang
  - Tibet
  - The former Kwantung Leased Territory
  - The present Port Arthur Naval Base area
  - Liaoning Province
- Eastern Europe
  - Albania
  - Bulgaria
  - Czechoslovakia
  - East Germany (Soviet Zone of Germany and Soviet Sector of Berlin)
  - Estonia
  - Hungary
  - Latvia
  - Lithuania
  - Romania
- Korea, North
- Outer Mongolia
- Poland
- Union of Soviet Socialist Republics (USSR)
- Viet-Nam (North)

X *GC-50 LIMITATION OF LIABILITY. Seller shall not be liable for consequential damages, such as, but not limited to, losses of profits or losses by reason of plant shut down. This provision shall not alter nor relieve the seller from his obligations under this contract.*

X *Added for Contract.*

PART 1 - GENERAL REQUIREMENTS

TABLE OF CONTENTS

		Page
Section 1A - GENERAL DESCRIPTION AND SCOPE OF THE WORK		1A-1 through 1A-4
1A.1	General	1A-1
1A.2	Work Included Under These Specifications	1A-1
1A.3	Performance Guarantees	1A-1
1A.4	Miscellaneous Materials and Services	1A-2
1A.5	Work Not Included Under These Specifications	1A-2
1A.6	Schedule	1A-2
1A.7	Contractor's Services	1A-3
1A.8	Training Program	1A-4
Section 1B - GENERAL EQUIPMENT SPECIFICATIONS		1B-1 through 1B-17
1B.1	General	1B-1
1B.2	Referenced Specifications and Standards	1B-1
1B.3	Quality Assurance	1B-1
1B.4	Factory Assembly	1B-1
1B.5	Packaging	1B-2
1B.6	Protection	1B-2
1B.7	AID Emblem	1B-3
1B.8	Weatherproofing	1B-3
1B.9	Source of Materials and Repair Parts	1B-3
1B.10	Design Coordination	1B-3
1B.11	Correction of Manufacturing Errors	1B-3
1B.12	Equivalent Materials and Equipment	1B-3
1B.13	Tools	1B-4
1B.14	Compressed Air	1B-4
1B.15	Control Power	1B-4
1B.16	Auxiliary Power	1B-5
1B.17	Welding	1B-5
1B.18	Shop Coating	1B-5
1B.19	Alignment and Balance	1B-6
1B.20	Lubrication	1B-6
1B.21	Drive Units	1B-6
1B.22	Shaft Couplings	1B-7
1B.23	Safety Guards	1B-7
1B.24	Equipment Bases	1B-7
1B.25	Instrumentation	1B-7
1B.26	Electrical Accessory Devices	1B-10
1B.27	Nameplates	1B-11
1B.28	Factory Prewired Electronics Systems Cabinets	1B-12
1B.29	AC Motor Starters	1B-12
1B.30	Raceway	1B-12
1B.31	Wiring	1B-13

	Page
1B.32 Cable Termination Provisions	1B-15
Motor Control Center Specification and Data Sheet	1B-16
Shipping Container Identification	1B-17
Section 1C - ENGINEERING DATA	1C-1 through 1C-6
1C.1 General	1C-1
1C.2 Correspondence	1C-1
1C.3 Design Data	1C-1
1C.4 Drawings	1C-1
1C.5 Wiring Diagrams	1C-4
1C.6 Instruction Manuals	1C-5
Typical Equipment Instruction Book Cover	A6104-030273

Section 1A - GENERAL DESCRIPTION AND SCOPE OF THE WORK

1A.1 GENERAL. This section covers the general description, scope of work, and supplementary requirements for equipment, materials, and services included under these specifications.

The equipment furnished under these specifications will be incorporated into a new steam power plant to be constructed on a site near the harbor at Semarang, Indonesia. The plant will have two oil fired steam electric generating units of approximately 50 megawatts capacity each.

1A.2 WORK INCLUDED UNDER THESE SPECIFICATIONS. The work under these specifications shall include furnishing control and instrument equipment delivery of same to Port of Semarang, Indonesia and unloading from transport; providing services and miscellaneous materials; all complete as specified herein and in accordance with the contract documents defined in Article GC.1 of the GENERAL CONDITIONS.

The equipment and materials furnished under these specifications for each of the new generating units shall include the following major items:

Control systems as described in Section 2B

Instruments as described in Section 2C

Electrical instruments as described in Section 2D

Panels and enclosures as described in Section 2E

Control valves as described in Section 2F

Equipment, materials, and accessories furnished shall be delivered to the Port of Semarang, Indonesia and unloaded from the transport, under these specifications. They will be received, transported to the plant site, unloaded, stored, and erected under separate specifications. Unloading from ships and storing at the site will not constitute acceptance.

The Contractor shall provide drawings and engineering data, manufacturer's field services, tools, instruction manuals, miscellaneous materials and services, and shall participate in design conferences, all as specified herein.

1A.3 PERFORMANCE GUARANTEES. The equipment furnished under these specifications will be tested by the Owner after installation to demonstrate its ability to operate satisfactorily under the conditions specified and to fulfill the warranties and guarantees set forth herein.

Specific performance guarantees are specified in the detailed specifications. Should the tests indicate that the equipment fails to meet guaranteed performance, the Contractor shall take immediate steps to correct the deficiencies in accordance with the requirements specified under GUARANTEE in the GENERAL CONDITIONS.

1A.4 MISCELLANEOUS MATERIALS AND SERVICES. Miscellaneous materials and services not otherwise specifically called for shall be furnished by the Contractor in accordance with the following:

All nuts, bolts, and gaskets between components and equipment furnished under these specifications

All piping integral to or between any equipment furnished under these specifications, except as otherwise specified

All necessary instrument and power and control wiring and raceways integral to any equipment furnished under these specifications. This shall include terminal blocks and internal wiring to these terminal blocks for equipment requiring external connection.

Erection drawings, prints, information, instructions, and other data for use by the erection contractor

1A.5 WORK NOT INCLUDED UNDER THESE SPECIFICATIONS. The following items of work will be furnished by the Owner:

Transporting from the Port of Semarang, unloading and storing at the plant site, and field erecting all equipment

Foundations, foundation bolts, and sleeves

Field office furnishings, supplies, telephone service, and equipment for the manufacturer's field representatives

Grouting materials and placing thereof

Permanent electric wiring to connect equipment terminal boxes to the plant electrical system

Operating personnel for startup and tests

X 1A.6 SCHEDULE. The Contractor shall schedule production and shipment of the equipment and materials to assure delivery at the Port of Semarang, Indonesia during September 1975.

X *Refer to Item 31 of Addendum 1.*

Within 30 days after the contract award, a shipping schedule for major components shall be submitted by the Contractor for joint acceptance of the Owner and the Engineer.

1A.7 CONTRACTOR'S SERVICES. The services called for in WORK INCLUDED UNDER THESE SPECIFICATIONS shall be in accordance with the following.

1A.7.1 Submittal of Engineering Data. Drawings and other engineering data for the specified equipment and materials are essential to the design and subsequent construction of the entire generating unit. Time is of the essence in completing each phase of the work so that both units can be in commercial operation on the scheduled dates.

The Contractor will be required to submit drawings and engineering data in accordance with the schedule and requirements specified under Section 1C - ENGINEERING DATA, to assure compliance with the overall construction and operating schedule.

1A.7.2 Manufacturer's Technical Field Services. Upon request by the Owner, the Contractor shall provide the services of one or more technical field representatives to advise and assist the Owner in the erection of the equipment and materials furnished under these specifications, to inspect the equipment after erection, and to advise the Owner's personnel on proper operation of the equipment.

The Contractor shall state in his Proposal the costs to the Owner for providing such services. A per diem service cost for each representative, exclusive of living and travel expenses shall be stated based on an 8 hour per day 6 day work week. The hourly rate for overtime work in excess of 48 hours per week shall also be stated. The per diem rate for service shall apply only during working days at the site and not during the seventh day of the week unless actually engaged in work at the site. The per diem rate will apply while the person is in transit to Indonesia.

The number of days of transportation time for which the per diem service rate will be paid shall be as agreed upon by the Contractor and the Owner based on actual travel time, but shall not exceed three days each way for travel to and from the United States.

Living and transportation expenses within Indonesia will be reimbursed by the Owner in rupiahs at actual cost, but not to exceed the per diem expense rate stated in the Proposal.

Transportation costs to and from Indonesia will be reimbursed at actual cost. Transportation fare shall not exceed economy jet fare by the shortest practical route. Transportation costs shall include passport and visa costs, inoculations required, and living expenses incidental to travel.

1A.7.3 Design Conference. Within 30 days after award of contract the Contractor's design engineer shall attend a design conference at a time and place in the USA mutually agreed upon to discuss matters relative to the execution of this Contract. Additional design conferences shall be held as required thereafter to expedite the work.

1A.7.4 Tools. The Contractor shall furnish and ship with the equipment one set of all special tools required for the erection, dismantling, or maintenance of the equipment as specified in Section 1B of these specifications.

1A.7.5 Instruction Manuals. Instruction manuals shall be furnished in accordance with the requirements stated in Section 1C of these specifications.

1A.8 TRAINING PROGRAM. The Engineer will conduct a training program in the United States for training Owner's supervisory operating personnel for the Semarang Steam Power Plant. If requested by the Engineer, the Contractor, and his manufacturers, shall make their manufacturing facilities available for inspection trips by the Owner's trainees and shall assist in discussing the equipment and its design, operation, and maintenance.

Section 1B - GENERAL EQUIPMENT SPECIFICATIONS

1B.1 GENERAL. These General Equipment Specifications apply in general to all equipment and materials. Certain requirements specified herein will obviously not apply to the particular equipment and materials furnished under these specifications; however, where applicable to a particular item of equipment or material, these requirements shall apply.

These General Equipment Specifications are supplementary to the detailed specifications; if requirements in conflict with the requirements specified herein are specified in the detailed specifications, the detailed specifications shall govern to the extent of such conflict.

1B.2 REFERENCED SPECIFICATIONS AND STANDARDS. The specifications, codes, and standards referenced in these specifications (including addenda, amendments, and errata) shall govern in all cases where references thereto are made. In case of conflict between the referenced specifications, codes, or standards and these specifications, the latter shall govern to the extent of such difference.

The specification, code or standard applied in each case shall be the latest revision adopted and published at the date of taking bids. Any conflict between standards shall be referred to the Engineer who will determine which standard shall govern.

1B.3 QUALITY ASSURANCE. The Contractor shall maintain a quality program that provides that equipment, materials, and services under these specifications whether manufactured or performed within the Contractor's plant or at any other source shall be controlled at all points necessary to assure conformance to contractual requirements. The program shall provide for the prevention and ready detection of discrepancies and for timely and positive corrective action. The Contractor shall make objective evidence of quality conformance readily available to the Owner and the Engineer. Instructions and records for quality assurance shall be controlled.

1B.4 FACTORY ASSEMBLY. Equipment shall be shipped completely factory assembled, except when the physical size, arrangement or configuration of the equipment, or shipping and handling limitations make the shipment of completely assembled equipment impracticable, in which case the equipment shall be assembled and shipped as stated in the Contractor's proposal.

When proposals are submitted without statements describing sectional shipments, it will be understood that no field assembly of the equipment will be required and the Contractor shall be responsible for all cost encountered in the field for assembly of sections, accessories or appurtenances not listed in the Proposal as requiring field assembly.

1B.5 PACKAGING. All equipment and materials shall be suitably coated, wrapped, or covered and boxed or crated for export shipment and to prevent damage or deterioration during handling and storage at the site.

All accessory items shall be shipped with the equipment. Boxes and crates containing accessory items shall be marked so that they are identified with the main equipment. The contents of each box and crate shall be indicated by markings on the exterior.

An itemized list of contents shall be attached to the outside of each box or crate in a weather-resistant envelope. An identical list shall be included inside each box or crate. The lists shall be plainly marked and placed in an accessible location to facilitate receipt and inspection.

Each package or shipping unit shall be clearly marked as indicated on the sheet entitled "SHIPPING CONTAINER IDENTIFICATION" included at the end of this section.

Packaging or shipping units shall be designed within the limitations of the unloading facilities of the receiving ports and the ship which will be used for transport. Ships with special heavy capacity unloading rigging may be required for large units of equipment. It shall be the Contractor's responsibility to investigate these limitations and to provide suitable packaging and shipping to permit unloading at Jakarta or the Port of Semarang. "On deck" shipment will not be permitted unless prior approval has been obtained from the Engineer.

Electrical equipment, controls and insulations shall be protected against moisture and water damage. All external gasket surfaces and flange faces, couplings, motor pump shafts, bearings and like items shall be thoroughly cleaned, and coated with rust preventive compound as specified above, and protected with suitable wood, metal or other substantial type covering to insure their full protection.

1B.6 PROTECTION. Coated surfaces shall be protected against impact, abrasion, discoloration, and other damage. Surfaces which are damaged shall be repaired.

All exposed threaded parts shall be greased and protected with metallic or other substantial type protectors. All female threaded openings shall be closed with forged steel plugs. All piping, tubing, and conduit equipment connections shall be sealed with metallic or other rough usage covers and taped to seal the interior of the equipment piping, tubing, or conduit.

Provisions shall be made to ensure that water does not enter any equipment during shipment or in storage at the plant site.

Returnable containers and special shipping devices shall be returned by the manufacturer's field representative at the Contractor's expense.

1B.7 AID EMBLEM. All shipping containers shall carry the official AID clasped hands emblem. The emblem affixed to each shipping container shall be affixed in such a manner which assures that the emblem will remain legible until the shipment reaches the consignee. Size of the emblem in every case shall be large enough to be clearly visible at a reasonable distance. A list of emblem suppliers is available from AID.

The official AID clasped hands emblem shall be prominently displayed on all ships during loading and unloading when their cargo consists entirely of AID financed goods. Ship charterers shall include instructions relative to display of the emblem in the charter party agreements.

1B.8 WEATHERPROOFING. All outdoor equipment and all appurtenances shall be designed for satisfactory operation during 60 mile per hour wind and driving rain. All exposed unpainted parts shall be fabricated of corrosion resisting metal. All ventilating openings shall be louvered on outdoor equipment to prevent entrance of rain under weather conditions described above. All ventilating openings on outdoor equipment shall be equipped with fine mesh monel filters and stainless steel bug screens.

1B.9 SOURCE OF MATERIALS AND REPAIR PARTS. Equipment and accessories furnished shall be from a reputable manufacturer currently engaged in production of such materials.

Individual parts shall be manufactured to standard sizes and gages so that repair parts, furnished at any time, can be installed in the field.

1B.10 DESIGN COORDINATION. The Contractor shall be responsible for the selection and design of equipment and materials which will provide the best coordinated performance of the entire system. Components of rotating equipment shall be selected so that the natural frequency of the complete unit is not at or critically near the operating range of the unit.

1B.11 CORRECTION OF MANUFACTURING ERRORS. Equipment and materials shall be complete in all respects within the limits herein outlined. All manufacturing errors or omissions required to be corrected in the field shall be done by the manufacturer or his duly authorized representative at the Contractor's expense.

1B.12 EQUIVALENT MATERIALS AND EQUIPMENT. Whenever a material or article is specified or described by using the name of a proprietary product or the name of a particular manufacturer or vendor, the specific item mentioned shall be understood as establishing the type, function, and quality desired.

Other manufacturers' products will be considered provided sufficient information is submitted to allow the Engineer to determine that the products proposed are equivalent to those named.

1B.13 TOOLS. The Contractor shall furnish and ship with the equipment one set of all special tools required for the erection, dismantling, or maintenance of the equipment. The tools shall be shipped in separate heavily constructed wooden boxes provided with hinged covers and padlock hasps.

Maintenance tools shall be boxed separately and the boxes shall be marked as indicated on the sheet entitled "SHIPPING CONTAINER IDENTIFICATION".

Whenever possible, boxes containing tools shall be packed into larger containers with the equipment.

A weatherproofed itemized list of the contents shall also be indicated on the outside of each box.

The maintenance tools shall include all special handling rigs, bars, slings, and cable. All tools shall be in new and unused condition.

1B.14 COMPRESSED AIR. Filtered, dried, oil-free compressed air will be supplied for operation of pneumatic instruments and control valves. Normal house service air will be supplied for operation of other pneumatic devices. The compressed air will be supplied at receiver pressure varying from 70 to 100 psi.

Pressure regulators shall be provided for pneumatic devices which operate at pressure levels other than receiver pressure. Pressure regulators shall be Fisher Controls Co. Model 67 FR with pressure gage, or acceptable equal.

1B.15 CONTROL POWER. Electrical power for control and instrumentation will be a nominal 240 volt, single phase, 50 hertz, alternating current, or a nominal 250 volt direct current. The Contractor shall provide any devices required for proper operation and protection of the equipment during electrical power supply fluctuations described in the following paragraphs.

All dc electrical control and instrumentation devices shall be designed for continuous operation on an ungrounded station battery which will float on trickle charge at 258 volts. The Contractor shall guarantee satisfactory operation when the equipment is continuously energized at any voltage from 200 to 280 volts dc, with ambient temperatures as specified. Electrical devices served from this supply shall not impose any ground connections on it.

All alternating current control and instrumentation devices shall, unless otherwise specified, be designed for operation on a nominal 240 volt, 50 hertz, single phase, alternating current system. The Contractor shall guarantee satisfactory operation when the equipment is continuously energized at any voltage from 190 to 250 volts alternating current. Equipment required for operation at other nominal voltages shall be guaranteed to operate satisfactorily over proportional voltage variations. The dropout voltage shall be less than 140 volts for relays and 175 volts for contactors and starters.

All alternating current and direct current devices shall be guaranteed to operate satisfactorily under voltage conditions specified in the above
X paragraphs and at a range of ambient temperatures from 50 C to -30 C.

1B.16 AUXILIARY POWER. Auxiliary equipment, such as motors, transformers, and rectifiers, requiring electrical power shall be designed to operate from one of the nominal electrical power sources as follows:

Volts	Phase	Hertz
4160	3	50
416	3	50
240	1	50
250	DC	--

Preferred ac motor ratings shall be in accordance with the following schedule:

Horsepower	Volts	Phase
Below 3/4	220	1
3/4 to 250	380	3
250 and above	4000	3

Emergency motors shall be designed to operate on nominal 250 volts dc with voltage variations as described for dc control power.

Variations from preferred motor design voltages must be acceptable to the Engineer.

1B.17 WELDING. If the manufacturer has special requirements relating to the welding procedures for welds at the terminals of the equipment to be performed under separate specifications, the requirements shall be submitted to the Engineer in advance of all erection work.

1B.18 SHOP COATING. All metallic surfaces subject to corrosion shall be protected by suitable coatings applied in the shop. Surfaces which will be inaccessible after assembly shall be protected for the life of the equipment. The surfaces shall be cleaned and prepared in the shop. All mill scale, oxides, and other coatings shall be removed. Sand or grit blasting of internal areas which will be exposed to steam or treated feedwater will not be allowed. Exposed surfaces shall be finished smooth, thoroughly cleaned, and filled as necessary to provide a smooth uniform base for painting. Surfaces to be finish painted after installation, or requiring paint for corrosion protection until installation, shall be shop painted with one or more coats of primer as hereinafter specified.

1B.18.1 Painting. Transformers, switchgear, and other electrical equipment shall be shop finished with one or more coats of primer and two coats of high grade oil resistant enamel. The finish colors shall be manufac-

X *Refer to Item 32 of Addendum 1.*

turer's standards, to be selected specifically by the Owner at a later date. The interior of all panels and switchgear shall be finished with gloss white enamel. A sufficient quantity of paint in each color shall be furnished to provide one complete coat for touchup.

Shop primer for steel and iron surfaces shall be Koppers "622 Rust Penetrating Primer", Mobil "13-R-50 Chromox QD Primer", or Tnemec "77 Chem-Prime" unless otherwise specified.

1B.18.2 Preservative Coatings. Ferrous surfaces which should not be painted shall be coated with rust preventive compound, Houghton "Rust Veto 334" or Rust-Oleum "R-9".

1B.18.3 Galvanizing. When so specified in the detailed specifications, structural steel members and bolts shall be galvanized. After all cutting, punching, reaming, drilling, and capping have been completed, structural steel members shall be "pickled" in accordance with the latest accepted practice, to remove all scale, rust, grease, and other impurities and then hot-dip galvanized in accordance with ASTM A123.

When specified to be galvanized in the detailed specifications, erection and structural bolts shall be galvanized in accordance with ASTM A394 for galvanized steel transmission tower bolts.

1B.19 ALIGNMENT AND BALANCE. All rotating parts shall be true and dynamically balanced. Excessive noise or vibration will be sufficient cause for rejection of the equipment. All rotating equipment shall be balanced at the factory.

1B.20 LUBRICATION. Equipment shall be lubricated by systems designed for continuous operation. Lubrication systems shall not waste lubricants and shall not require attention during startup and shutdown, or more frequently than once weekly. If pressure greasing of the equipment is required, the Contractor shall furnish grease guns for the Owner's use in maintenance.

Oil lubricant level indicators shall be furnished and marked to indicate proper levels under both standstill and operating conditions.

1B.21 DRIVE UNITS. Speed changing equipment furnished as a part of the equipment specified shall conform to the requirements herein.

The nominal horsepower rating of each drive unit shall be at least equal to the theoretical brake horsepower required to drive the equipment under full load, including all losses in speed reducers and power transmission.

The nominal input horsepower rating of each gear or speed reducer shall be at least equal to the nominal output horsepower of the drive motor or to the maximum power requirement for the driven equipment under the design conditions specified, whichever is greater.

Drive units shall be designed for continous service and shall include provisions which will prevent oil leakage around shafts.

1B.22 SHAFT COUPLINGS. Shaft couplings shall be used between all drives and driven equipment. Couplings shall be attached to driver and driven shafts by press fits and keys.

Shaft couplings shall be sized to transmit the maximum brake horsepower requirements of the driven equipment with a service factor of not less than 2.

Couplings shall be of the all metal lubricated gear flexible type, Koppers "Fast" or acceptable equal.

On applications where the motor is furnished under separate specifications, the motor half coupling shall be machined to the motor shaft dimensions on the motor drawing reviewed by the Engineer, and shipped to the motor supplier for shop mounting. The responsibility for proper fit of the coupling halves shall rest with the Contractor.

1B.23 SAFETY GUARDS. Guards shall be provided for protection of personnel from all exposed moving and/or rotating machine elements.

Each guard shall be fabricated from ASTM A36 steel plate having a minimum thickness of 3/16 inch and designed for easy installation and removal. Necessary supports and accessories shall be furnished with each guard.

Guards for outdoor installation shall be galvanized.

1B.23.1 Horizontal Shaft Equipment. Safety guards for horizontal shafts, shaft couplings, belt sheaves, etc. shall be of the inverted "U" design with sides extending to the equipment base or base plate.

1B.23.2 Vertical Shaft Equipment. Safety guards for vertical shafts, shaft couplings, etc. shall be of 360 degree construction with bolted vertical joints. Hinged sections shall be provided for inspection of couplings and glands.

1B.24 EQUIPMENT BASES. A cast iron or welded steel base plate shall be provided for all rotating equipment which is to be installed on a concrete base. Each base plate shall support the unit and its drive assembly, shall be of a neat design with pads for anchoring the units, shall have a raised lip all around, and shall have a threaded drain connection.

1B.25 INSTRUMENTATION. Accessory instrumentation components furnished with the equipment shall be in accordance with the requirements stated herein unless otherwise specified in the detail specifications. The devices specified shall be of the manufacture and model number herein specified, or an acceptable equal.

These devices shall be constructed in accordance with the latest applicable requirements of ANSI, ISA, and NEMA.

Permanently affixed, stainless steel tags stamped with the Engineer's tag number and a description of its use shall be furnished on all pressure switches, level switches, temperature switches, temperature elements, and solenoid valves.

X [redacted]

1B.25.1 Limit Switches. Limit switches, except those integrally mounted on motor operated valves, shall be selected from the following alternates:

(a) National Acme Company "Snaplock" Series SL. Switches shall have not less than two dpdt switch elements.

(b) Honeywell "Microswitch" DTF2-2RN, or variation thereof, with two dpdt switch elements

Limit switches shall be constructed to withstand the temperatures encountered in the actual service. Explosionproof construction shall be furnished where required by applicable code or the detailed specifications.

1B.25.2 Pressure Switches. Pressure switches shall be selected as follows:

(a) Static switches shall be Static "O" Ring.

(b) Differential pressure switches for low range application shall be manufactured by FW Dwyer.

(c) Differential pressure applications requiring both indication and pressure switch contacts shall be implemented with equipment manufactured by Barton Instrument Corporation regardless of the range.

Pressure switches shall be furnished in explosionproof construction where required by applicable code or the detailed specifications. Each pressure switch shall be specifically selected for the service in which it is used. The acceptability of each switch with respect to range, overpressure capability, capability, repeatability, and deadband shall be demonstrated to the Engineer.

1B.25.3 Temperature Switches. Temperature switches shall each consist of a thermocouple as described under "Temperature Detectors" and an electronic instrument. Electronic instruments shall be Rochester Instrument Systems, Inc., Series ET-205, complete with dual, double-pole, double-throw relays wired to terminals. Each of the two electronic instrument

X *Refer to Item 33 of Addendum 1.*

relays in a temperature switch shall operate from an independent, calibrated set point. Electronic instruments shall be suitable for use with ISA Type K thermocouples.

1B.25.4 Level Switches. Level switches shall be Magnetrol having float and body construction appropriate to the service conditions of the systems to which they are connected. Switch elements shall be of the mercury bottle type magnetically coupled to the float. Two switch elements shall be available at each level point monitored. Switches shall be reversible for NC or NO operation or shall be double throw construction. Switch element leads shall be of high temperature construction and terminated on terminal blocks within the switch housing. Switch housings shall be splashproof construction, unless otherwise specified.

1B.25.5 Solenoid Valves. Solenoid valves shall be manufactured by Automatic Switch Company. Valves shall be selected to incorporate body construction, trim materials, and internal arrangements suitable to the application and shall be acceptable to the Engineer. Solenoid enclosures shall be NEMA 4 unless otherwise specified. Solenoid coils shall be Class H high temperature construction and shall be suitable for continuous duty.

1B.25.6 Pressure Gages. Gages for control air supply and signal pressures integral to the instrument shall be in accordance with the control manufacturer's standards. All other gages shall be 4-1/2 inch Ashcroft "Duragauge". Dials shall be engraved with service legends, or separate nameplates of engraved laminated phenolic shall be attached to the gage faces to identify the service. Legends shall be as directed by the Engineer. All gages, except on control air service, shall have stainless steel movements and nylon bearings. Gages for panel mounting shall be Type 1377. Gages for separate mountings shall be Type 1379 with 1/2 inch NPT bottom connections. Pulsation dampeners shall be furnished with all gages except control air gages.

1B.25.7 Thermometers. Thermometers for local mounting shall be Ashcroft 5 inch dial AHT 6060 "Every Angle" bimetallic thermometers. Thermometers for panel mounting shall be Ashcroft 4-1/2 inch dial 6135 mercury actuated with Type 1377 case and stainless steel armored capillary tubing of length required for the installation. The dials shall be engraved with service legends, or separate nameplates of engraved laminated phenolic shall be furnished attached to the dial faces to identify the service. Legends shall be as directed by the Engineer. Thermowells shall be furnished for all thermometers and shall be extra heavy solid bored Type 316 stainless steel construction. They shall be threaded and designed to allow seal welding.

1B.25.8 Temperature Detectors. All detectors shall be of the dual element type. Detectors shall be ISA Type K (chromel-alumel) thermocouples with Type KX extension wire. Temperature detectors shall be of the stainless

steel sheathed, compacted magnesium oxide insulated type, and shall be ungrounded unless otherwise specified. Thermocouples and extension wire shall comply to the special limits of error contained in ANSI C96.1-1964.

Thermocouple assemblies shall be complete with cast iron weatherproof connection heads and nipples. Extension nipples, insulating bushings, and compression fittings shall be furnished if required for the application. Heads shall be designed for positive connection and for a terminal temperature differential of not more than 0.1 F. The thermocouple shall be spring loaded for positive contact with the wall. The lead wire for all related detectors shall be brought to common junction boxes.

Fluid system temperature detectors shall be equipped with extra heavy solid bored Type 316 stainless steel thermowells and extension nipples. The thermocouple, extension nipple, and head shall be arranged to permit removal and replacement of the thermocouple with the equipment in operation.

1B.26 ELECTRICAL ACCESSORY DEVICES. Electrical accessory devices shall be furnished in accordance with the requirements stated herein unless otherwise specified in the detailed specification sections.

1B.26.1 Electrical Instruments. All electrical indicating instruments shall be of the switchboard type with one per cent accuracy classification, shall be designed for semiflush mounting and, unless otherwise specified, shall be approximately 4 inches square. All instrument scales shall consist of black markings on a white background. Any instrument which is checked in the field and found to be inaccurate in excess of 2 per cent shall be returned to the Contractor for calibration or replacement without cost to the Owner. All ac instruments shall be designed for operation through 5 ampere current transformers secondaries and 120 volt potential transformer secondaries. Instruments shall be General Electric Type AB-40, Westinghouse Type 241, or acceptable equal.

1B.26.2 Control Relays. General service auxiliary relays shall be I-T-E Type J10A, J11A, J12A, J13P, or acceptable equal. Where current carrying requirements exceed the capacity of the J10A, auxiliary relays shall be General Electric Types HFA or HGA, Westinghouse Type MG-6 or acceptable equal.

Timing relays where the delay period may exceed 3 minutes shall be Agastat Series 7000 or acceptable equal.

1B.26.3 Control Switches. Control switches shall be 600 volt, 20 ampere, multistage, rotary type with a minimum of ten contacts. Switches shall have black, fixed, modern, pistol grip type handles and engraved black plastic escutcheon plates. Switches shall be Westinghouse Type W, General Electric Type SB-1, or acceptable equal.

1B.26.4 Push-buttons and Selector Switches. Push-buttons and selector switches shall be Square D, Class 9001, Type T or TS oiltight, Honeywell-Microswitch Type PT, or acceptable equal.

1B.26.5 Indicating Lights. Indicating lights shall be Honeywell-Micro Switch Type PTW with 387 lamps, transparent glass lenses, and appropriately sized resistors. Alternate equal indicating lights must be acceptable to the Engineer.

1B.26.6 Alarm Contacts. Alarm contacts for remote annunciation shall be suitable for operation at 250 volts dc.

1B.26.7 Molded Case Circuit Breakers. Molded case circuit breakers used in equipment covered under these specifications shall have 5000 amperes interrupting capacity at 250 volts dc and 10,000 amperes symmetrical interrupting capacity at 240 volts ac.

1B.26.8 Terminal Blocks. Terminal blocks shall be provided with white marking strips and, where permitted by the safety codes and standards, shall be without covers. Extra terminals in a quantity of not less than 25 per cent of the intraconnected terminals shall be provided on each terminal block for circuit modifications and for termination of all conductors in a multiconductor cable.

Fuses shall not be mounted on terminal blocks. Neither step type terminal blocks nor angle mounting of terminal blocks will be acceptable.

All terminal blocks, except internal terminal blocks in factory prewired electronic systems cabinets, shall be rated 600 volts and shall have strap screw terminals. Standard terminal blocks for 10 AWG and smaller conductors shall be General Electric Company Type EB-5 or acceptable equal. Terminal blocks shall be appropriately sized for larger incoming conductors. Shorting type terminal blocks shall be six point General Electric Company Type EB-5 or acceptable equal.

1B.26.9 Fuse Blocks. Where fuse blocks rated 30 amperes, 250 volts are required by the specifications or the manufacturer's design, they shall be modular type with bakelite frame and reinforced retaining clips. Blocks shall be Class H, Model No. 15530-R screw terminal fuse blocks and manufactured by Underwriters' Safety Device Co., 4332 North Kedzie Avenue, Chicago, Illinois 60618. Blocks for other current and voltage ratings shall be similar in construction and by the same manufacturer.

Article 1B.27 for Electrical equipment:

1B.27 NAMEPLATES. The nameplates for the power transformers shall be lettered in both English and Indonesian. Nameplates for other equipment shall be in English.

Nameplates shall be provided for switches and other devices and shall be lettered in English with legends and nameplates acceptable to the Engineer.

Panel mounted instruments shall have nameplates made of laminated black phenolic engraving stock with white core. The lettering shall be not less than 1/4 inch square, bold engraved through the black outside layers so that the letters appear white.

Nameplates for locally mounted instruments shall be attached to the faces of the instruments in a manner acceptable to the Engineer.

1B.28 FACTORY PREWIRED ELECTRONIC SYSTEMS CABINETS. Internal wiring in factory prewired electronic systems cabinets may be installed according to the Contractor's standard as to wire size insulation and method of termination on internal equipment. Identification of conductors may be done by insulation color coding identified on drawings or by printed wiring lists. Terminal blocks for connection of external circuits into factory prewired electronic systems cabinets shall meet all the requirements specified above under Terminal Blocks.

1B.29 AC MOTOR STARTERS. The Motor Control Center Specification and Data Sheet, following this section, shows the wiring of the ac motor starters which will be furnished by the Owner. The Contractor shall assure that the control wiring, including terminal designations, is compatible with the starter wiring as shown.

1B.30 RACEWAY. Unless specified otherwise, all raceway interconnections between devices, panels, boxes, and fittings shall conform to ANSI C80.1 and UL 6. All conduit connections shall be of the threaded type. Unless specified otherwise, all conduit shall be hot-dip galvanized rigid steel. All conduit entering outdoor enclosures shall enter through "Meyers Scru-Tite" hubs or threaded openings.

Double locknuts and bushings shall be provided at the termination of all conduit not terminated in hubs. Locknuts shall be designed to securely bond the conduit to the box or cabinet when tightened.

Insulating bushings with insulating inserts in metal housings shall be provided on conduit 1-1/4 inches and larger. Insulating bushings shall be grounding type. Standard bushings shall be galvanized.

Conduit fittings used on outdoor equipment shall be of heavy cast construction and shall be sealed and gasketed.

All conduit shall be installed in exposed runs parallel or perpendicular to dominant surfaces with right angle turns made of symmetrical bends or fittings. A run of conduit shall not contain more than the equivalent of four quarter bends, including those immediately at outlets and fittings. Bends in conduit shall be made without reducing the internal diameter of the conduit.

Conduit shall be supported at intervals not to exceed 5 feet by means of conduit clamps and clamp-backs.

Moisture pockets shall be eliminated from conduit installed on outdoor equipment. If water cannot drain to the natural opening in the conduit system, a hole shall be drilled in the bottom of a pull box or a "C-type" conduit fitting provided in the low point of the conduit run.

Conduit shall be securely fastened to all boxes and cabinets. Threads on metallic conduit shall project through the wall of the box to allow the bushing to butt against the end of the conduit. The locknuts both inside and outside shall then be tightened sufficiently to bond the conduit securely to the box.

The raceway system provided for all interconnecting wiring shall be acceptable to the Engineer.

1B.31 WIRING. In general, all devices furnished under these specifications and requiring electrical connnections shall be designed for wiring into junction boxes or cubicles with terminal blocks. Terminal blocks shall be provided for conductors requiring connection to circuits external to the specified equipment, for internal circuits crossing shipping splits, and where equipment parts replacement and maintenance will be facilitated.

All spare contacts on relays, control switches, limit switches or similar devices shall be wired to accessible terminal blocks for the Owner's future connections. All wiring leaving an enclosure shall leave from terminal blocks and not from other devices in the enclosure.

Auxiliary equipment such as terminal blocks, auxiliary relays or contactors shall be readily accessible. Auxiliary equipment shall be arranged in compartments, cubicles, or junction boxes that a serviceman will have direct access to the equipment without removal of barriers, cover plates, or wiring. Grouped terminal blocks for all external connections shall be provided.

Terminal blocks shall be grouped in instrument and control compartments for easy accessiblity unrestricted by interference form structural members and instruments. Sufficient space shall be provided on each side of each terminal block to allow an orderly arrangement of all leads to be terminated on the block.

A shorting type terminal block shall be installed at an accessible location for each current transformer. The shorting terminal block shall be the one nearest the current transformer.

Terminal blocks shall not be mounted in compartments containing cables or buses operating at voltages above 600 volts.

All wiring shall be conservatively selected for the electrical and environmental conditions of the installations. Unless otherwise specified or required otherwise to perform satisfactorily in a particular service, all

electrical conductor shall be Class B, stranded copper, 14 AWG or larger. Oil resistant and proper temperature application wiring shall be used throughout. MI cable is not acceptable. Control panel and cabinet wiring shall be stranded copper conductor with NEC Type SIS, cross-linked polyethylene insulation rated at 600 volts, designed for a maximum conductor temperature of 90 C, and shall meet the vertical flame test requirements per IPCEA S-19-81, Paragraph 6.19.6. Conductor insulation for other general service wiring shall be flame retardant polyethylene according to IPCEA S-19-81, Part 3.18. NEC Type SF-2 silicone rubber insulated cable with braided glass jacket shall be used where ambient conditions cause conductor operating temperatures to exceed 90 C.

Preinsulated ring-type terminals with crimp guides or preinsulated slotted spring spade terminals shall be provided on all control conductor terminals, except, noninsulated terminals shall be provided on devices equiped with individual fitted covers. Typical devices upon which control conductors shall be terminated with noninsulated terminals are General Electric Type SB-1 and Westinghouse Type W control switches and General Electric HEA and Westinghouse Type WL lockout relays.

Each terminal block, conductor, relay, breaker, fuse block, other auxiliary device, and terminal shall be permanently labeled to coincide with identification indicated on the drawings. All terminals provided for termination of external circuits shall be identified by inscribing circuit designations acceptable to the Engineer on the terminal block marking strips with black paint. All other wiring terminations shall be identified either by legible markings on the device terminals or by printing on wire sleeves. Terminal and conductor identification shall be by a permanent method unaffected by heat, solvents, or steam, and not easily dislodged, preferably by means of printing on plastic sleeves. Identification of conductors shall be by the method described hereafter or acceptable equal. Conductor identification shall be with slip-on sleeves not less than 1/2 inch long. The sleeves shall be as manufactured by the Dura Mark Company, Port Washington, New York. Conductor identification shall be printed on the sleeve with a Thomas and Betts Company Catalog No. WT163M-1 marking pen, Panduit Corp. Part No. PX marking pen, or acceptable equal. After inscription of the conductor identification, the marking sleeve shall be coated with clear acrylic spray coating, Krylon No. 1303 as manufactured by Borden, Inc., or acceptable equal. Adhesive labels are not acceptable.

The arrangement of connections on terminal blocks shall be acceptable to the Engineer.

All connections requiring disconnect plug type devices shall be provided with factory terminated conductors on both sides of each plug. Sufficient multiconductor cable shall be provided to connect the plugs into junction boxes containing terminal blocks for the Owner's external connections. All conductors on the disconnect portion of plugs shall be in a common jacket.

All temporary wiring installed in the factory for equipment testing shall be removed prior to shipment of the equipment.

1B.32 CABLE TERMINATION PROVISIONS. Electrical conductors supplying the equipment provided under these specifications will be sized for installation in covered electrical cable tray to a 4 inch loading depth and with 40 per cent random fill. Sizing will be in accordance with the requirements of the following standards:

IPCEA - NEMA Standard of Ampacities of Cables in Trays, 1972

AIEE - IPCEA Power Cable Ampacities Handbook, 1962 (IPCEA P-46-426 & IEEE Publication No. S-135)

IPCEA Short Circuit Characteristics of Insulated Cable, Publication P-32-382, 1969

Capacity of conduit entrances, terminal enclosures, and conductor terminals shall be as required to accommodate either copper or aluminum conductors which are sized as described in the previous paragraph.

ITEM
SPEC
PROJECT

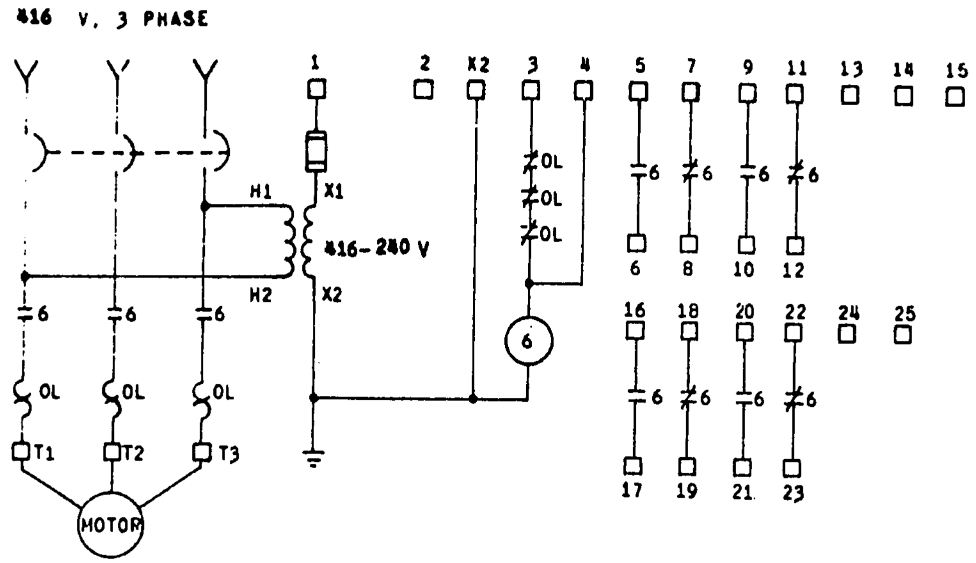

WIRING DIAGRAM COMBINATION FULL VOLTAGE NON-REVERSING STARTER

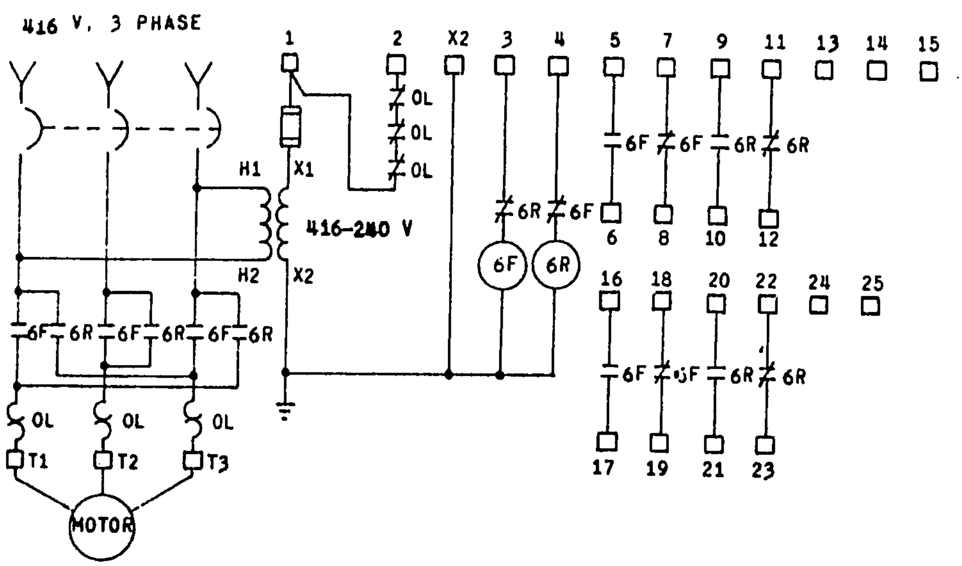

WIRING DIAGRAM COMBINATION FULL VOLTAGE REVERSING STARTER

BLACK & VEATCH INTERNATIONAL CONSULTING ENGINEERS KANSAS CITY, MO.	MOTOR CONTROL CENTER SPECIFICATION AND DATA SHEET	1B-16

YELLOW

PROJECT AID
BARANG PEMERINTAH
PROYEK PELITA

RED
BLUE

PERUSAHAAN UMUM LISTRIK NEGARA
PROYEK PLTU SEMARANG
JL. SILIWANGI 379 SEMARANG

L/C NO.:
I.R. NO.:

SEMARANG
INDONESIA

CASE NO.:

GROSS WEIGHT:
NET WEIGHT:
DIMENSION:

NOTES:
1. THE ABOVE MARKINGS ARE TO BE PLACED ON TWO OPPOSITE STANDING SIDES.
2. TAGS ARE TO BE MARKED AS SHOWN ABOVE EXCEPT THAT CORNER MARKINGS ARE NOT REQUIRED.
3. TAGS ARE TO BE PROTECTED FROM FADING.
4. AID "CLASPED HANDS" EMBLEM SHALL ALSO BE APPLIED TO ALL SHIPPING CONTAINERS.

BLACK & VEATCH INTERNATIONAL CONSULTING ENGINEERS KANSAS CITY MISSOURI USA	SHIPPING CONTAINER IDENTIFICATION	PROJECT 6104
	PERUSAHAAN UMUM LISTRIK NEGARA SEMARANG STEAM POWER PLANT UNITS 1&2	PAGE 1B-17

Section 1C - ENGINEERING DATA

1C.1 GENERAL. This section covers engineering data, instruction manuals, and manufacturer's drawings which the Contractor shall submit to the Engineer for design information or review. As stipulated in Section 1A, compliance with the specified schedule for drawing and data submittal is essential to the scheduled progress and completion of Units 1 and 2 and is of the essence of this Contract.

1C.2 CORRESPONDENCE. Correspondence forwarding drawings, instruction manuals, and other engineering data shall be addressed as follows:

Black & Veatch International
P.O. Box 8405
Kansas City, Missouri 64114

Attention: Mr. L. J. Svoboda

1C.3 DESIGN DATA. Within 60 days after award of contract 12 copies of the following design data shall be submitted:

Outline dimensions and weights of all freestanding panels and cabinets

Data sheets for all panel mounted instruments, local transmitters, control drives, analyzers, flow elements, temperature detectors, and control valves

Electric power requirements for system and panel ventilation

Revised drawings, if required, of the functional one-line schematic diagrams included in the Proposal

1C.4 DRAWINGS. Drawings shall be submitted for the Engineer's review in accordance with the following procedures and schedules.

1C.4.1 Procedures. Drawings shall be in sufficient detail to indicate the kind, size, arrangement, weights of each component, breakdown for shipment, and operation of component materials and devices; the external connections, anchorages and supports requir , the dimensions needed for installation and correlation with other materials and equipment; and the information specifically requested in this section under "Schedules".

Six copies of each drawing, preliminary or certified, shall be submitted to the Engineer. Each drawing submitted, shall be clearly marked with the name of the project, the specification number, the Engineer's assigned number, the Contractor's name, and references to applicable specification paragraphs. When catalog pages are submitted, the applicable items shall be indicated.

"Preliminary" drawings shall be reasonably complete and suitable for the Engineer's use in establishing basic plant arrangement and design requirements. Preliminary drawings will not be reviewed by the Engineer; however, the Engineer will refer to the Contractor conflicts or discrepancies which he may discover in his reference to the drawings.

"Certified" drawings will be reviewed by the Engineer and returned to the Contractor marked RETURNED FOR CORRECTION, EXCEPTIONS NOTED, NO EXCEPTIONS NOTED, or RECEIVED FOR DISTRIBUTION.

When the drawings are returned marked NO EXCEPTIONS NOTED or RECEIVED FOR DISTRIBUTION, additional copies shall be submitted to the Engineer for distribution. The number of additional copies will be determined by the Engineer, but will not exceed six.

When the drawings are returned marked EXCEPTIONS NOTED the changes shall be made as noted thereon and corrected copies shall be submitted to the Engineer for final review and distribution. The number of corrected copies will be determined by the Engineer, but will not exceed twelve.

When the drawings and data are returned marked RETURNED FOR CORRECTION the corrections shall be made as noted thereon and as instructed by the Engineer and six corrected copies shall be resubmitted for review.

The Engineer's review of drawings and data will cover only general conformity to the specifications and the external connections and dimensions which affect the plant arrangement. The Engineer's review of drawings returned marked NO EXCEPTIONS NOTED, or EXCEPTIONS NOTED does not indicate a thorough review of all dimensions, quantities, and details of the material, equipment, device, or item indicated and does not relieve the Contractor from any responsibility for errors or deviations from the specification requirements.

No work shall be performed in connection with the fabrication or manufacture of equipment and materials until the drawings and data therefor have been reviewed by the Engineer. Work may proceed on equipment and materials when the drawings and data therefor have been returned marked NO EXCEPTIONS NOTED or RECEIVED FOR DISTRIBUTION and when drawings have been marked EXCEPTIONS NOTED provided the work is performed in accordance with the Engineer's notations.

All drawings, after final processing by the Engineer, shall become a part of the specification documents and the work indicated or described thereby shall be performed in conformity therewith unless otherwise required by the Owner or the Engineer.

When changes in the wiring and equipment are made in the field to correct shop construction errors or to adapt the requirements to the Owner's requirements, the Contractor shall prepare and submit 12 copies of record drawings to the Engineer to indicate the equipment as finally installed.

Upon receipt from the Engineer of drawings marked NO EXCEPTIONS NOTED or RECEIVED FOR DISTRIBUTION, the Contractor shall transmit two full size reproducible prints of each drawing to the Engineer. The reproducible shall be right reading, on 0.003 inch thick Du Pont wash-off mylar and shall not exceed 34 inches by 44 inches in size. Diazo sepias, black line mylar, or auto-positive reproducibles will not be acceptable.

Three microfilm aperture cards of each final drawing shall be submitted. Microfilming and aperture card mounting shall be in accordance with the applicable requirements of Military Specifications MIL-M-9868, and MIL-M-38761.

1C.4.2 Schedules. Drawings shall be submitted in accordance with the following schedules. The number of days specified shall be from and after the date of contract award.

X a. Preliminary issue within 60 days and certified issue within 120 days:

Panel and enclosure layout drawings and dimensional drawings indicating the location of terminations for field wiring and piping

Outline dimensions of transmitter equipment

Outline dimensions of temperature detector wells

Outline dimensions of control valves

Flow element fabrication drawings

Typical system component schematic drawings

b. Preliminary issue within 90 days and certified issue within 180 days:

System detailed cabling wiring diagram

Schematic wiring diagrams for all field mounted devices

X Refer to Item 34 of Addendum 1.

c. Certified drawings 90 days following receipt of Engineer's information:

Panel and enclosure wiring diagrams

Panel and enclosure piping diagrams

Wiring termination drawings

Piping termination drawings

d. With instruction manuals:

Special tools list

Equipment reference drawings

Instrumentation data sheets

Calibration data

Installation and maintenance instructions

Narrative description of the operation of each control system

1C.5 WIRING DIAGRAMS. Connection and interconnection wiring diagrams furnished by the Contractor shall meet the requirements of ANSI Y 14.15a-1971, Section 15-11, Article 15-11.3.2.1, BRANCHED HIGHWAY. The wiring drawings shall be drawn with all devices indicated in their relative physical locations. Wiring diagrams shall be rear view. Each device connection shall have near each termination, indicated in separate breaks, the opposite end destination.

Wiring diagrams shall be prepared on sheets approximately 34 inches by 44 inches. Where interconnecting wiring from different items of equipment or sectional wiring diagrams of the same item of equipment appear on different wiring diagram sheets, all interconnections shall be clearly identified. Where sectional wiring diagrams are required for a single item of equipment such as relay panel or control panel, that section of the panel which is represented by each individual wiring diagram sheet shall be keyed on that sheet in a manner acceptable to the Engineer.

Information indicated on the Contractor's drawings shall include wiring of the individual panel items as they actually will appear in the panel, contact arrangements of switches, and internal wiring of relays and instruments.

Elementary diagrams shall be cross-referenced to terminal markings on the connection and interconnection diagrams, but need not indicate complete details of circuits external to the panels. Each item of panel mounted equipment indicated on the diagrams shall be identified by item number and name.

Sufficient space shall be left on the Owner's side of outgoing terminal blocks for adding cable color codes and circuit numbers.

1C.6 INSTRUCTION MANUALS. The Contractor shall furnish ten complete and final copies of instruction manuals for the equipment not later than 30 days prior to the shipment of the equipment.

Nine final copies of the instruction manuals shall be sent to the Owner and one final copy shall be sent to the Engineer.

Manuals shall be assembled and bound in Buchan Type ORL (old style) binders covered with pyroxylin impregnated black buckram covers, manufactured by Buchan Loose Leaf Records Co., Clifton Heights, Pennsylvania. Binders shall not be greater than 3-1/2 inches thick and shall be adjustable to permit secure compact binding. Each binder shall be stamped with the proper identification as indicated on Drawing A6104-030273 bound at the end of this section. Binders shall be black with gold lettering.

A complete proofed copy of the proposed manual, including cover lettering, shall be submitted to the Engineer for acceptance. After acceptance, the remaining copies shall be submitted as directed by the Engineer.

The manuals shall include the following:

Table of Contents and index tabs

Specifications, test data, and curves

Description of the equipment

Operating instructions

Instructions in methods of receiving, inspection, storage, and handling

Complete installation and maintenance instructions

Assembly drawings

Parts lists

Schedule of required lubricants

Nameplate information and shop order numbers for each item of equipment and component part thereof

List of recommended spare parts and prices

List of maintenance tools furnished with the equipment

NAME
OF
EQUIPMENT

PERUSAHAAN
UMUM LISTRIK
NEGARA

SEMARANG
STEAM POWER
PLANT

UNITS
1 & 2

VOLUME
NUMBER*

(Backbone)

PERUSAHAAN UMUM LISTRIK NEGARA
AGENCY OF MINISTRY OF PUBLIC WORKS AND POWER
GOVERNMENT OF REPUBLIC OF INDONESIA
JAKARTA, INDONESIA

SEMARANG STEAM POWER PLANT
100 MW (2 x 50 MW) UNITS 1 & 2

INSTRUCTION BOOK

FOR

NAME OF EQUIPMENT

VOLUME NUMBER*

MANUFACTURER'S NAME
MANUFACTURER'S ADDRESS

AID LOAN 497-H-024

BLACK & VEATCH INTERNATIONAL
CONSULTING ENGINEERS
KANSAS CITY, MISSOURI, U.S.A.

(Cover)

NOTE:

Cover Type: Large - 36 point Alternate Gothic #2
Medium - 16 point Futura Medium
Small - 12 point Futura Medium

Backbone Type: All same point size of Alternate Gothic #2 (Either 10 point, 12 point or 14 point) as backbone width allows.

* Stamp cover with volume number if instructions are contained in more than one volume

TYPICAL EQUIPMENT INSTRUCTION BOOK COVER

BLACK & VEATCH INTERNATIONAL CONSULTING ENGINEERS KANSAS CITY, MO., U.S.A.	PERUSAHAAN UMUM LISTRIK NEGARA SEMARANG STEAM POWER PLANT UNITS 1 & 2	A6104-030273

PART 2 - TECHNICAL REQUIREMENTS

		Page
Section 2A - TECHNICAL REQUIREMENTS APPLYING TO ALL SYSTEM EQUIPMENT		2A-1 through 2A-2
2A.1	General	2A-1
2A.2	Generating Unit Description	2A-1
2A.3	Ambient Conditions	2A-2
2A.4	Nomenclature	2A-2
2A.5	Equipment Identification	2A-2
2A.6	Instrument Scales	2A-2
Section 2B - CONTROL SYSTEMS		2B-1 through 2B-5
2B.1	General	2B-1
2B.2	Factory Tests	2B-1
2B.3	Components	2B-1
2B.4	Performance Requirements	2B-3
2B.5	Combustion Control	2B-3
2B.6	Steam Temperature Control	2B-4
2B.7	Feedwater Control	2B-4
2B.8	Condensate Control	2B-4
2B.9	Hotwell Level Control	2B-4
2B.10	Heater Level Control	2B-4
2B.11	Air Preheat Temperature Control	2B-4
2B.12	Fuel Oil Temperature Control	2B-5
2B.13	Flash Evaporator Control	2B-5
2B.14	Miscellaneous Systems	2B-5
Section 2C - INSTRUMENTS		2C-1 through 2C-12
2C.1	General Instrumentation Requirements	2C-1
2C.2	Accuracy	2C-1
2C.3	Transmitters	2C-2
2C.4	Receiver Instruments	2C-7
2C.5	Temperature Monitor	2C-8
2C.6	Analytical Instruments	2C-10
2C.7	Alarm Contacts	2C-11
2C.8	Fuel Oil Viscosity Transmitter	2C-12
2C.9	Draft Gages	2C-12

		Page
Section 2D - ELECTRICAL INSTRUMENTS AND ACCESSORIES		2D-1 through 2D-4
2D.1	General	2D-1
2D.2	Annunciators	2D-1
2D.3	Electrical Accessory Devices	2D-3
2D.4	Toggle Switches	2D-3
2D.5	Watthour Meters	2D-4
2D.6	Printing Demand Meter	2D-4
2D.7	Totalizer	2D-4
2D.8	Buzzers	2D-4
Section 2E - PANELS AND ENCLOSURES		2E-1 through 2E-8
2E.1	General	2E-1
2E.2	Construction	2E-1
2E.3	Wiring	2E-1
2E.4	Tubing	2E-3
2E.5	Control Air	2E-3
2E.6	Nameplates	2E-4
2E.7	Control Panels 1 and 2	2E-4
2E.8	Pneumatic Systems Racks 1 and 2	2E-6
2E.9	Flue Gas Analyzer Cabinets 1 and 2	2E-7
2E.10	Synchronizing Panel	2E-7
2E.11	Flash Evaporator Panel 1	2E-8
Section 2F - CONTROL VALVES		2F-1 through 2F-8
2F.1	General	2F-1
2F.2	Code Requirements	2F-1
2F.3	Control Valve Specification Sheets	2F-1
2F.4	Valve Construction	2F-1
2F.5	Valve Operators	2F-4
2F.6	Control Valve Accessories	2F-4
2F.7	Controllers	2F-5
2F.8	Solenoid Valves	2F-7
2F.9	Tubing and Air Sets	2F-7
2F.10	Identification	2F-7
Safety Shutoff Valve		2F-8
Butt Weld End Preparation		M-526.01

Section 2A - TECHNICAL REQUIREMENTS APPLYING TO ALL SYSTEM EQUIPMENT

2A.1 GENERAL. These technical requirements apply to the control and instrument equipment furnished under these specifications.

Except as specifically specified otherwise in these specifications, the equipment and materials for both Units 1 and 2 shall be duplicates.

2A.2 GENERATING UNIT DESCRIPTION. The major items of plant equipment to be controlled by systems furnished under these specifications are described in this article.

2A.2.1 Turbine Generator. The turbine generator is a 50,000 kW, 3000 rpm single flow nonreheat steam turbine direct connected to a hydrogen cooled synchronous generator. The turbine generator is rated for a throttle steam flow of approximately 452,000 pounds per hour at 1250 psig, 950 F. The maximum expected steam flow is approximately 500,000 pounds per hour at 1313 psig, 950 F, giving a generator output of approximately 56,000 kW.

2A.2.2 Steam Generator. The steam generator is a natural circulation drum type unit with a pressurized furnace. The unit is fired with No. 6 fuel oil.

Light oil (No. 2) is available for firing during warmup operations.

Fuel is introduced into the furnace by six wide range return-flow mechanical atomizing fuel oil burners equipped with light oil igniters. The burners are operated by a burner control and supervisory system. The burners are equipped with air registers, and retract mechanisms.

Combustion air flow is delivered to the burners by one constant speed forced draft fan.

Steam temperature is maintained by a superheat desuperheater. Flow of spray water to the desuperheater is controlled by duplicate full capacity spray water control valves.

Feedwater is delivered to the steam generator by either of two full capacity boiler feed pumps and is regulated by duplicate full capacity throttling valves in a common line at the discharge of the pumps.

Condensate is delivered to the deaerator by either of two full capacity condensate pumps and is regulated by a throttling valve in a common line at the discharge of the pumps.

2A.3 AMBIENT CONDITIONS. The control panel and the pneumatic systems rack will be installed in a space which is normally heated or cooled for personnel comfort. All equipment on and in these enclosures shall operate satisfactorily under conditions imposed by an air conditioning system failure, for which ambient temperature may be as high as 120 F. Except as otherwise specified, equipment not on or in these enclosures will be installed either out-of-doors or in building spaces which are neither heated nor cooled. Temperature ranges expected are as follows:

Boiler areas - indoors	25 to 60 C
Other indoor areas	25 to 50 C
Outdoor areas	25 to 40 C

2A.4 NOMENCLATURE. The equipment item numbers used in these specifications shall be utilized by the Contractor in designating equipment. The Contractor may assign a temporary number where one has not previously been assigned. Numbers so assigned by the Contractor may be reassigned at the option of the Engineer. All electrical and tubing drawings shall utilize terminal designations as directed by the Engineer. Terminology in these specifications conforms to the definitions as given in applicable standards of the ASME, IEEE, ISA, and SAMA.

2A.5 EQUIPMENT IDENTIFICATION. Each item of equipment shall be equipped with a laminated phenolic plastic tag, permanently affixed, giving the identifying number and description assigned in these specifications. Items furnished under these specifications but not identified herein shall have tags inscribed as directed by the Engineer.

Except as otherwise specified, all tags shall be engraved in English and Indonesian as accepted by the Engineer.

2A.6 INSTRUMENT SCALES. Except as otherwise specified, all pressure instruments shall have metric and English scales and all temperature instruments shall have metric scales. Pressure instruments shall have scales in kilograms per square centimeter and in pounds per square inch. Temperature instruments shall have scales in degrees centigrade. Level instruments shall have scales in millimeters.

Section 2B - CONTROL SYSTEMS

2B.1 GENERAL. System requirements are established on a functional basis and the Contractor shall be responsible for selection and connection of components to form systems whose performance is in accord with specification requirements. The control systems shall include all necessary primary measuring equipment, panel selector stations, control relays, and control drives as described. System designs shall be submitted to the appropriate major equipment contractors and their recommendations considered in the design of control systems. Control systems shall be pneumatic unless specifically stated otherwise.

2B.2 FACTORY TESTS. All control systems shall be factory tested for continuity and direction of response. The components to be tested shall include selector stations, control relays and alarm contactors.

2B.3 COMPONENTS. Except as otherwise specified, control system components shall be of the pneumatic type.

All primary measuring and controlling devices shall conform to the applicable requirements given under INSTRUMENTS. Additional features shall be provided as needed to meet the functional requirements or descriptive requirements set out in the individual specifications.

2B.3.1 Pneumatic Control Components. Pneumatic logic modules shall be installed on a separate rack, except for those modules which may be attached to and installed with panel mounted selector stations. Control logic modules installed with selector stations shall not consume panel front space in addition to the requirements of the selector stations alone.

Control logic shall be of modular construction of standard interchangeable assemblies. Sufficient ventilation shall be provided to assure ambient temperatures around equipment which will assure long life and reliable operation. Control system constants such as gain, reset, and rate shall be adjustable without removing modules from service and shall have calibrated scales.

2B.3.2 Panel Mounted Selector Stations. Panel mounted selector stations shall be furnished as required by the detailed description of the control X system and by the Instrument List. ~~Selector stations shall be the automatic balance type which permits bidirectional bumpless transfer between automatic and manual without manual rukk adjustment~~ A transfer lever shall be provided to shift between manual and automatic control.

Selector stations which include logic modules shall have the same front panel dimensions and the same design and general appearance as selector

X *Deleted in accordance with Item 35 of Addendum 1.*

stations which do not include logic modules. Each selector station assembly shall be designed for single hole mounting in the control panel. Each selector station shall be provided with a service legend plate engraved as accepted by the Engineer.

Selector stations which include auxiliary set point or bias functions shall be equipped with appropriate adjustment knobs and with indicating scales graduated directly in the measured units. The adjustment knobs shall be identified by separate service legends.

Manual control from selector stations shall be independent of the operation of control system logic modules including signal followers.

The bidder's proposal shall specifically list any selector stations or manual loaders additional to those described in the Instrument List.

2B.3.3 Pneumatic Control Drives. Pneumatic control drives shall be furnished in accordance with the information given in the Instrument List. Operating torques shall be not less than those tabulated. Signal range shall be 3-15 psi.

Drives of the modulating type shall be equipped with Bailey Meter Company or acceptable equal positioners having cams which can be field cut to suit the equipment characteristics. Drive speeds shall be field adjustable.

Each drive shall be provided with a dust-tight enclosure which shall be designed for convenient removal of covers to permit access to equipment. Each drive shall be equipped with an internal heater.

Solenoid valve and limit switches shall conform to the applicable requirements of Articles 1B.25.1 and 1B.25.5. Wiring for all electrical equipment shall terminate at a single terminal block conveniently located for connection of the field wiring. All limit switch contacts and solenoid valve leads shall be wired to the terminal block.

Position transmitters shall produce signals which are linear with respect to control drive position and shall be of the slide wire, MCT, or pneumatic type as tabulated.

Manual operators shall consist of handwheels and hand operated brakes for drives of over 400 lb-ft torque capacity. Manual operators for smaller drives shall consist of levers on the output shafts with hand operated locking devices.

Linkage for control drives shall be furnished and shall consist of driving and driven levers and ball-and-socket type connecting links. Simple linkage shall be furnished unless otherwise tabulated.

Control drive installations shall be such that pleasing appearance and satisfactory access to equipment are maintained. Control drives shall be complete with all required accessory equipment including air supply filter regulators, signal conversion equipment, and other devices.

2B.4 PERFORMANCE REQUIREMENTS. The boiler control systems shall provide a unit operating turndown of not less than ten-to-one when firing No. 6 fuel oil. This requirement is based upon the unit maximum load resulting in readings for steam flow, feedwater flow, air flow, and fuel flow that are at a minimum of 90 per cent of the range span. If the readings are less than 90 per cent, the turndown requirement will be adjusted for each system affected.

The boiler control systems shall be capable of performing the following dynamic load changes while maintaining safe furnace conditions and without endangering other equipment:

Instantaneously drop 50 per cent of the maximum load capability from approximately full load.

Instantaneously pick up 50 per cent of the maximum load capability from approximately 50 per cent load.

Instantaneously drop the load from approximately 50 per cent of load to 10 per cent load with all burners in service.

Instantaneously drop the load from approximately full load to plant auxiliary load.

2B.5 COMBUSTION CONTROL. The combustion control system shall utilize a feedforward signal derived from steam flow with a corrective signal from turbine throttle pressure to establish the required Btu input to the furnace and the required air flow for good combustion. The required Btu signal shall be compared to the actual metered air flow through a low selector so that the resulting output is the Btu input permitted by the available air. This signal shall then be compared to the actual Btu input, which is derived from the total net oil flow. The resulting signal shall be used to establish the position of the fuel oil return valves. Two pneumatic diaphragm operated full capacity regulating valves shall be furnished.

The air flow demand signal shall be the output of a high select comparison of the master load signal; the total metered fuel flow; and a preset minimum air flow demand. The air flow demand shall be compared to the actual metered air flow, and the resulting error signal shall be used in a two-mode flow controller to modulate the forced draft fan inlet vane and forced draft fan discharge damper control drives.

2B.6 STEAM TEMPERATURE CONTROL. The steam generating unit will be provided with one superheat spray system. The steam temperature control system shall maintain temperatures within 10 degrees of set point under all conditions of swinging load which are normally experienced. The temperature control system shall utilize a measurement of final steam temperature, desuperheater outlet temperature, boiler air flow, and such additional anticipating measurements as are required to achieve sensitive and stable control. Two pneumatic diaphragm operated full capacity valves will be furnished by the Owner.

2B.7 FEEDWATER CONTROL. Feedwater will be supplied to the boiler by two full capacity motor driven centrifugal feedwater pumps operating at constant speed. Control of the feedwater supply shall be by means of regulating valves in the feedwater line to the boiler. The control system shall operate by measurement cf steam flow, desuperheater spray water flow, feedwater flow, and drum level. Two full capacity regulating valves shall be furnished.

2B.8 CONDENSATE CONTROL. A control system shall be furnished to maintain the deaerator storage tank level at an operator set value. The system shall utilize measurements of feedwater flow, condensate flow, and deaerator storage tank level. The system shall modulate a pneumatic control valve in the condensate line.

The condensate control system shall establish a minimum flow rate of condensate through the condensate pumps and air ejector. The system shall modulate a pneumatic control valve in the condensate recirculation line to the condenser hotwell.

2B.9 HOTWELL LEVEL CONTROL. A local pneumatic system shall be furnished to control hotwell level by modulating control valves in the condensate makeup line and the condensate drain line. The system shall establish a deadband of hotwell levels in which neither valve is open. If the hotwell level falls below the deadband, the makeup valve shall open proportionally. If the hotwell level rises above the deadband, the discharge valve shall open proportionally. The system shall include a displacer type pneumatic level transmitter, and all required pneumatic control componenets to allow adjustment of the deadband and the proportional response of both valves.

2B.10 HEATER LEVEL CONTROL. A system of heater level controls shall be furnished in accordance with the control valve specification sheets included with these specifications.

2B.11 AIR PREHEAT TEMPERATURE CONTROL. A control system shall be provided to regulate the average cold end temperature of the air heater by

modulating a three-way valve at the preheat coil discharge. The air is preheated by water pumped from the deaerator through the preheat coils. The discharge of the coil can be either returned to the deaerator or passed directly to the pump suction for recirculation through the coils. The system shall calculate the average cold end air heater temperature as an average of the air heater air inlet and gas outlet temperatures. Each temperature measurement shall be the average of three temperature elements installed in the respective duct. The system shall include a panel mounted manual-automatic station with a set point adjuster. Two E/P converters shall be furnished to convert the thermocouple millivolt output to a pneumatic signal.

2B.12 FUEL OIL TEMPERATURE CONTROL. A local control system will be furnished by the Owner to regulate the fuel oil header temperature. The Contractor shall furnish a thermocouple and E/P converter for measuring the fuel oil temperature for the control system. The output signal range shall be 3-15 psi.

2B.13 FLASH EVAPORATOR CONTROL. One control system shall be furnished for the flash evaporator serving both units.

The ratio of blowdown flow to makeup flow shall be measured and controlled by positioning the control valve in the blowdown line. The value of the ratio shall be adjustable by the operator by a separate knob on a manual-automatic selector station. The system shall subtract the blowdown flow from the makeup flow for recording net distillate flow.

2B.14 MISCELLANEOUS SYSTEMS. Miscellaneous pressure and level transmitters, indicators, and recorders shall be furnished as specified elsewhere herein and in the Instrument List.

Section 2C - INSTRUMENTS

2C.1 GENERAL INSTRUMENTATION REQUIREMENTS. Instruments shall be furnished in accordance with the Instrument List included with these specifications and as specified herein. Electronic or pneumatic transmission type instruments shall be used for all measurements, except where specifically noted to be direct connected. All instruments listed for purchase under Specification K-2A shall be furnished.

All instruments shall be constructed to perform normally and meet all guarantees when subjected to the vibration and the range of ambient temperatures normally experienced in power plant building structures.

Instrument cases located on the control panel shall be in colors selected by the Engineer.

All required auxiliary equipment for instruments including thermocouples and wells, resistance elements and wells, flow nozzles, orifices, transmitters, special wiring and piping materials, air filters and pressure regulators, and all special devices required for installation in the instrument piping or wiring system shall be furnished complete as required for each individual element or instrument, unless specifically stated otherwise. Each pneumatic device requiring air supply and intended for field mounting shall include an air set with gage, Fisher Type 67 FR.

2C.2 ACCURACY. Flowmeter primary elements of the head class shall be so constructed that their performance will be in accordance with the requirements of Section 9, "Tolerances", of ASME PTC 19.5; 4-1959.

Flowmeter secondary devices shall produce transmitted signals which are linear with respect to flow within plus or minus one per cent of the full scale flow value when operating between 25 and 100 per cent of full scale value. The accuracy guarantee shall include the effect of errors in the differential head measuring device, square root converter, and signal generator, but not the primary device.

Transmitters for pressure shall transmit a signal which is linear with respect to the measured pressure within plus or minus one-half of one per cent of the measured range span.

Transmitters for level shall transmit a signal which is linear with respect to the measured level within plus or minus one per cent of the metered level range span, based on a specific gravity of 1.00.

Filled system temperature transmitters shall transmit a signal which is linear with respect to the measured temperature within plus or minus one per cent of the scale range at a reference ambient temperature of 60 F.

Electronic receivers for thermocouples, resistance temperature detectors, recorders, and other similar primary elements shall have an accuracy of plus or minus three-tenths of one per cent of the scale span. Electronic receivers for movable core transformer systems shall have an accuracy of plus or minus one-half of one per cent of the scale span.

All transmitters shall have less than one-half of one per cent shift in output with a 100 F change in ambient temperature.

Receiver-indicators and direct connected pressure instruments shall indicate the measured value within one per cent of the maximum scale value.

Receiver-recorders shall provide a chart record which is linear with respect to the transmitted signal within plus or minus one-half of one per cent of the scale span.

2C.3 TRANSMITTERS. Transmitters of the pneumatic or electronic type shall be furnished as required by the Instrument List and as required by the design of the control and instrument systems furnished. Transmitters noted to be locally mounted shall be equipped with mounting brackets suitable for attachment to faces of walls or columns by bolting or welding. Transmitters of the motion balance type shall be provided with indicating scales. Enclosures shall be suitable for indoor or outdoor installation. Transmitters to be located in hazardous atmospheres will be identified in the Instrument List. They shall be equipped with explosionproof enclosures suitable for the hazardous atmosphere as described in National Electric Code Article 500. Transmitters shall be designed for system maximum condition as indicated in the Instrument List.

All transmitters will be connected to their systems by use of piping, and any flexible connectors required by the transmitter design shall be furnished. All connections for primary piping and pneumatic tubing shall be provided with NPT female threaded connections not smaller than 1/4 inch. All connections for electric wiring shall be provided with holes or knockouts for electrical conduit connections not smaller than 1/2 inch nominal size. Electrical connections to locally mounted transmitters will normally use a short length of flexible conduit. Electronic transmitters shall transmit a 4 to 20 mAdc signal, linear with the measured variable.

Pneumatic transmitters shall transmit a signal linear with the measured variable.

2C.3.1 Flowmeters. Unless otherwise specified, all flowmeters shall be rate meters of the head or area class. Square root extracting mechanisms shall be provided, preferably as a part of the flowmeter secondary device, and the movement of all final indicating and recording mechansims shall be linear with respect to flow rate.

Primary devices for flowmeters shall be furnished in accordance with the primary element data sheets included with these specifications.

Primary devices for flowmeters shall be provided with all required accessories, including reservoirs, meter connections and reheat nipples. All reservoirs shall have one inch socket weld inlet and one inch socket weld outlet connections. All nipples and welding adapters shall be one inch and for socket weld connection. Primary element beta ratio shall be not greater than 0.70.

All flow nozzles shall be constructed of Type 304 or Type 316 stainless steel. Flow nozzles shall be designed in accordance with the ASME standards for long radius flow nozzles. Flow nozzles shall be of the weld-in type, and shall have the essential data stamped on the nozzle so that it can be read and transferred to the exterior of the pipe in which it is mounted by the piping fabricator. As an alternative to this procedure, the serial number only of the nozzle may be stamped on it, and all essential data relating to its installation given on a supplementary data sheet for transfer by the fabricator to the pipe exterior. The Contractor shall inspect this installation work at the piping fabricator's plant. This work will be in addition to the startup service. A report on each nozzle inspected shall be submitted to the Engineer.

Orifice plates shall be constructed of Type 316 stainless steel. Orifice plates shall be not less than 1/8 inch thick for nominal pipe diameters up to and including 12 inches and not less than 1/4 inch thick above this value. Plates shall be constructed in accordance with ASME-AGA standards. Each orifice plate shall be provided with a handle on which the orifice diameter, pipe diameter, and pressure tap distances are stamped. This information shall be so located that it can be read without removing the orifice plate from the pipeline.

Annular primary flow elements shall be constructed of Monel. Annular elements shall be of the self-averaging insert type, and shall have the essential data stamped on a permanent rustproof stainless steel tags chained to the element. Annular elements shall be Annular Type 752 as manufactured by the Ellison Instrument Division of Dieterich Standard Corporation. A flow calculation report shall be furnished for each annular element.

Combustion air flow shall be measured using either a flat duct venturi or an airfoil which will be provided by the Owner in the air heater air outlet duct. It is expected that the differential across the venturi or airfoil at full load will be approximately 2.0 inches of water. Mechanisms shall be of the diaphragm type with integral square root extracting devices. The meter shall be provided with an indicating scale and transmitter mechanism.

Flowmeter secondary devices may be of the d/p cell or motion balance mercury U-tube, Ledoux bell, or radial torque type. Indicating scales, if furnished, shall be graduated in terms of flow rate of the fluid measured. All secondary devices shall be provided with pneumatic transmitter devices unless specifically noted in the Instrument List as not requiring them.

The term "d/p cell" refers to those secondary devices which impose the differential pressure generated by the primary device on the opposite sides of a diaphragm or bellows device and measure the resulting force or electrical quantity change.

Measurement of main steam flow shall be by inferential means, using temperature compensated turbine first stage pressure as a flow index. The meter secondary element shall be a pressure transmitter, designed for field adjustment for acceptable readings. Data on anticipated pressures at different steam temperatures will be supplied by the Engineer.

The flow nozzle for the superheater spray shall be furnished completely installed in a section of piping. Each piping section shall have ends beveled for welding in accordance with details to be furnished by the Engineer, and the nozzle and pressure taps shall be mounted in it.

The oil flowmeters shall be inline Bailey Meter Company Type JR12 area meters.

The following measurements shall be compensated over the minimum ranges indicated below.

Measurement	Temperature Range-C
Fuel oil	0 to 150
Air flow	0 to 425
Steam flow (1st stage press.)	100 to 550

2C.3.2 Pressure Transmitters. Pressure transmitters shall utilize bourdon tubes, bellows, or force balance diaphragms as measuring device.

Transmitters sensing combustion product pressures shall be furnished complete with purge rotameters and flow regulators. When the transmitter is enclosure mounted, the associated purge equipment shall be furnished mounted and tubed as a complete installation.

2C.3.3 Level Transmitters. Level transmitters shall be furnished as described in the Instrument List and in the following paragraphs.

Level transmitters of the displacement float type shall be complete with float chambers of cast or fabricated steel construction, with upper side and lower side socket weld connections unless otherwise specified in the Instrument List. Displacement float chambers shall be designed for internal access without breaking the level connection primary piping. A gage glass shall be provided on each transmitter float chamber.

Differential pressure instruments utilized for level measurement shall be furnished with constant level reservoirs.

The boiler drum level indicator transmitter shall be a Clark-Reliance Electro Eye-Hye electric transmitter. It shall consist of a 10-probe "Electrolev" chamber, Model EL-1800 with one inch socket weld connections and a control unit with plug-in relays and variable voltage transformer with voltmeter. Each relay shall have two electrically isolated spdt contacts for the Owner's use. Fifteen feet of high temperature interconnecting cable between the Electrolev column and the Owner's junction box shall be furnished. Two alarm contacts shall be wired to terminal blocks in the control unit, in addition to the contacts wired to terminal blocks for remote light actuation. The control unit shall be mounted and wired inside the control panel.

Two indicating type drum level trip switches shall be furnished. The switches shall be Barton Model 289 or Bailey Meter Type LH differential pressure switches each containing two single pole double throw contacts for high and low drum level. The switches shall be suitable for a drum pressure design of 1670 psi and designed for a maximum differential head of 30 inches. The switches shall be furnished complete with reservoirs constructed of carbon steel with one inch socket weld connections. The drum level trip switches will be locally mounted.

A drum level transmitter complete with constant level reservoir shall be furnished. The equipment will also be used as part of the feedwater regulating equipment. Level range shall be 24 inch total. The instrument shall be designed for a drum design pressure of 1500 psi. The reservoir shall be constructed of carbon steel with socket weld connections. The

transmitter shall be mechanically compensated for variations in drum pressure.

2C.3.4 Temperature Transmitters. Temperature transmitters shall employ thermocouples or resistance elements as the temperature sensing devices, whichever is specified.

Thermocouples shall be ISA Type K standard accuracy class. Thermocouples shall be ungrounded, spring loaded for a minimum response time and shall be magnesium oxide packed with stainless steel sheathing.

Resistance temperature detectors shall be aluminum oxide packed, stainless steel sheathed, spring loaded, and designed for insertion in wells.

Thermocouples or resistance elements installed in boiler pressure parts within the boiler casing shall be provided with stainless steel sheathed extension leads of the required length to terminate in a cast iron weatherproof head located outside the casing. Exact length of leads will be supplied later.

Five thermocouple junction boxes with three thermocouples each shall be furnished for averaging boiler air and gas temperatures. Each thermocouple assembly shall have a 24" immersion length and shall be furnished with 1/2" stainless steel pipe protection tube. The junction boxes shall be NEMA 4 construction with all averaging devices mounted and prewired to terminals. A minimum of three sets of input terminals and one set of output terminals shall be provided. Terminals and terminal screws shall be copper. The junction boxes shall be suitable for wall mounting. The following temperatures shall be averaged:

FD fan air outlet temperature

Air heater air inlet temperature

Air heater air outlet temperature

Air heater gas inlet temperature

Air heater gas outlet temperature

Thermowells shall be provided for all thermocouples, resistance detectors, and filled system bulbs intended to measure fluid system temperatures. Wells shall be one-piece construction, made from stainless steel, and equipped with stainless steel extension nipples and cast iron connection heads. Wells shall be designed for screwed connections to the piping or equipment, and shall be suitable for seal welding. Wells installed in the main steam and high pressure feedwater lines shall have a thread diameter of 1-1/4 inches. Wells furnished for installation in boiler air or gas

ducts shall have a thread diameter of one inch. All other wells shall have a thread diameter of 3/4 inch. Lengths of wells and extension nipples will be furnished later by the Engineer.

2C.4 RECEIVER INSTRUMENTS. Receiver instruments of the pneumatic or electronic type shall be furnished as required by the Instrument List and as required by the design of the control and instrument systems furnished. Receiver instruments shall be panel mounted and arranged as indicated on the panel drawings included with these specifications, except as otherwise specified under Section 2E of this specification.

2C.4.1 Indicators. Vertical strip scale receiver instruments shall be used where specified, and shall be designed for the range of control signals used. The vertical indicators shall be Republic V5A or Bailey Type PY, as indicated in the Instrument List, or acceptable equal. Indicators shall be furnished with internal illumination.

A precision mercury column gage shall be furnished for indication of condenser vacuum. The gage shall be a Meriam Model 30EG25FF, complete with adjustable vernier scale, overrange protection, and designed for flush panel mounting. The overrange protection shall be a return well mounted inside the panel. The scale shall read in centimeters and millimeters of mercury.

A precision mercury barometer shall be furnished. The barometer shall be a Meriam Model 31EG10FF, complete with adjustable vernier scale and designed for flush panel mounting. The scale shall read in centimeters and millimeters of mercury. The barometer shall be furnished with an internal thermometer. The thermometers shall be -18 to 105 C.

2C.4.2 Recording Meters. Recorders for mounting on the control panel shall be furnished as indicated in the Instrument List. Miniature strip chart recorders shall be Foxboro Series 120 4 inch strip chart recorders. Bailey Mini-Line 500, or acceptable equal. The miniature recorders shall use roll type charts, and shall be provided with internal illumination. Leeds & Northrup Speedomax H or Speedomax W recorders shall be furnished as indicated in the Instrument List. Indicating scales, graduated in terms of the measured variable, shall be furnished. Chart tear-off devices shall be furnished. Chart speed shall be one inch per hour unless otherwise specified, and the charts shall be driven by ac synchronous clock motors. Each recorder shall be provided with a phenolic nameplate mounted in the window, which states the quantities measured, color of records, ranges of measured values, and chart multipliers.

Chart and scale ranges for all recorders shall be as selected by the Engineer, and any extra charges for special ranges shall be included in the lump sum contract price. All recorder charts shall have graduations which are essentially linear. The use of square root charts for flow measurements will not be accepted. Each recorder shall be provided with three years supply of charts and ink.

No recorder shall extend more than 23 inches behind the control panel face.

2C.4.3 Signal Converters. The Contractor shall furnish all signal converters required to condition signals for the recorders furnished. The signal converters shall be mounted in the pneumatic systems rack.

2C.4.4 Integrators. Integrators for mounting on the control panel shall be furnished as indicated in the Instrument List. Integrators shall be
X Foxboro ~~IAA~~, or acceptable equal.

2C.5 TEMPERATURE MONITOR. A temperature monitoring system shall be furnished. The system shall be designed for a maximum of 66 inputs, which will be ISA Type K (chromel alumel) thermocouples.

The system shall consist of the following equipment, which shall be furnished and installed in the control panel by the Contractor:

1 - Leeds & Northrup Speedomax W 12 point multipoint multibank recorder equipped with six banks of 11 points each. The recorder shall be furnished with fluorescent internal illumination, and nonglare glass. The recorder shall have dual speed chart drive with 2 inches per hour slow speed and 120 inches per hour fast speed. Scan speed shall be approximately 3 seconds per point. The recorder shall have one alarm switch and lock in relay per bank, and manual alarm reset buttons on the recorder door. The recorder shall be equipped to utilize the following modes of operation, which shall be operator selectable:

Continuous log (slow or fast speed)

Log on alarms only

Log on demand

Scan, indicate, and monitor

Pulse log by banks

X *Revised in accordance with Item 36 of Addendum 1.*

X The recorder shall be provided with all required plug-in type cables. A total length of twenty-five feet of cable shall be furnished for the monitor and its associated input banks.

The recorder shall provide capability to delete points by banks or to select any point for continuous display if required.

The recorder shall be furnished with an engraved nameplate which shall identify inputs by number and bank. Engraving shall be in the Indonesian language.

XX 24 - Alarm modules for continuous monitoring and alarm of preselected temperatures. The modules shall be Moore Series TCA dual alarm trips as manufactured by Moore Industries, Van Nuys, California, or acceptable equal. Alarm modules shall be equipped with downscale open input drive. The modules shall be located adjacent to the temperature monitors input racks.

The inputs shall be wired in parallel to the recorder and the alarm modules where applicable.

2C.5.1 Thermocouples. A total of 27 thermocouple assemblies shall be provided for inputs to each temperature monitor. The thermocouples and thermowells shall comply with Paragraph 1B.25.8. The remaining thermocouples for inputs to the temperature monitor will be provided by the Owner. The following tabulation of the lengths and sizes of the thermocouple assemblies is for bidding purposes. The exact lengths will be furnished later by the Engineer.

Quantity	Description	Connection Size	Immersion	Extension Nipple
1	FD fan air out	1" NPT	24"	5"
1	Air heater air out	1" NPT	24"	5"
1	Air heater gas in	1" NPT	24"	5"

NOTE: The above are three element averaging assemblies and are the same elements described in Paragraph 2C.3.4.

2	Main steam lines	1-1/4" NPT	6"	5"
5	Extraction steam lines	1-1/4" NPT	6"	5"
4	Heater drain lines	3/4" NPT	6"	5"

X Refer to Item 37 of Addendum 1.
XX Refer to Item 38 of Addendum 1.

Quantity	Description	Connection Size	Immersion	Extension Nipple
3	Feedwater lines	1-1/4" NPT	6"	5"
4	Condensate lines	3/4" NPT	6"	5"
2	Condenser hotwell	1-1/4" NPT	12"	5"
2	Circulating water lines	1-1/4" NPT	12"	1"
2	Auxiliary cool water lines	3/4" NPT	6"	1"

2C.6 ANALYTICAL INSTRUMENTS. Complete analysis systems shall be provided as specified in the following articles.

2C.6.1 Flue Gas Analysis. Two complete Bailey Meter Company systems for analysis of flue gas oxygen and combustibles shall be furnished. Each system shall consist of a continuous sampling type analyzer of the hydrogen burning type, gas sampling system, and enclosure mounted indicator-transmitter. The sampling system shall be of the recirculating water jet aspirated type complete with stainless steel dry type sample tube not less than 5 feet long with suitable supports and fitted with special 2 inch pipe cap suitable for mounting on 2 inch NPT nipples on a pressurized furnace. The water jet systems shall be complete with inductor, gas pump, regulating valves, filters, separators, traps, and all required accessories. Hydrogen regulating equipment shall be furnished. Each system shall be provided with an enclosure for the sampling equipment, analyzer and transmitters. Enclosure shall be freestanding and fully enclosed with hinged access doors. All interconnecting piping required between equipment mounted in the cabinet shall be furnished. Each enclosure shall be equipped with two hydrogen bottle racks and all required hydrogen piping, regulating equipment and all required special fittings. The hydrogen bottles will be provided by the Owner. One bottle each of span and zero calibrating gases, and calibrating gas regulators shall be furnished for both systems. Each enclosure mounted indicator-transmitter shall indicate oxygen and combustibles and shall be equipped with alarm contacts for low oxygen, high combustibles, and sample failure. The oxygen and combustibles measurements shall be transmitted by pneumatic signals to a recorder on the main control panel. The flue gas analyzer with its secondary instruments and accessories shall be suitable for 240 volt, 50 hertz operation.

2C.6.2 Water Chemistry Instruments. Recorders shall be furnished mounted on the Control Panel 1, Control Panel 2, and Flash Evaporator Panel 1 for conductivity and dissolved oxygen measurements.

Nine conductivity cells will be furnished by the Owner for direct connection to the conductivity recorders. The cells will be Leeds & Northrup Type 4804 flow-through temperature compensated electrolytic conductivity cell assemblies.

The range of conductivity will be furnished later by the Engineer, and the temperature compensation range shall be zero to 100 C.

The points to be monitored shall be as listed in the Instrument List.

The recorder for dissolved oxygen shall be compatible with the signal provided from the Owner's dissolved oxygen analyzer. Sample points and ranges shall be as listed in the Instrument List. The signal transmission range will be a linear 4 to 20 mA dc.

Each water chemistry recorder shall be furnished with six independently adjustable alarm switches.

2C.7 ALARM CONTACTS. Alarm units operating on pneumatic or electronic signals generated by the Contractor's instrumentation shall be furnished in accordance with the following table. The contacts specified below are in addition to those required by the Contractor's systems. Receiver contacts in lieu of alarm units will not be acceptable for the alarms listed in the table. All alarm contacts shall have spdt contacts rated at 0.5 amperes, 250 volts dc. Alarm units shall be mounted in the pneumatic systems rack.

Function	Application
Boiler air flow greater than 25% (2 contacts)	Boiler Protection System
Boiler air flow greater than 25%	Burner Control System
Boiler air flow less than 30%	Annunciation
Boiler air flow greater than 50%	Burner Control System
Low flue gas oxygen	Annunciation
High flue gas combustibles	Annunciation
High heater level (25 contacts)	Turbine Protection System
10 additional contacts - function to be determined at a later date	—

2C.8 FUEL OIL VISCOSITY TRANSMITTER. A fuel oil viscosity transmitter shall be furnished as described in the Instrument List. The transmitter shall be a Dynatrol Type CL-10DV viscosity detector, as manufactured by Automation Products Inc., Houston, Texas, or acceptable equal.

The viscosity transmitter shall transmit actual viscosity at process temperature, and shall not be temperature compensated. The transmitter shall be complete with all required accessories including a Flushing Flo-Gard and a signal converter. The signal converter shall be mounted in the pneumatic systems rack, and shall produce a pneumatic output signal suitable for recording.

The viscosity index shall be Saybolt Seconds Universal, and the transmission range shall be 0-500 SSU.

2C.9 DRAFT GAGES. Boiler drafts shall be measured by means of slack diaphragm mechanisms in cases designed for vertical scale multipointer panel mounted instruments. The indicators shall be internally illuminated and shall be Republic V5A or acceptable equal. All draft lines sensing combustion products shall be furnished with purge rotameters, flow regulators,
X and a 4-way back blowdown valve*x all mounted and piped within the main control panel.*

X Revised in accordance with Item 39 of Addendum 1.

Section 2D - ELECTRICAL INSTRUMENTS AND ACCESSORIES

2D.1 GENERAL. Electrical instruments shall be furnished in accordance with the Instrument List, the applicable requirements of Articles 1B.25 and 1B.26 and these additional requirements.

Instrument cases located on the control panel shall be in colors selected by the Engineer.

2D.2 ANNUNCIATORS. The following annunciation equipment shall be furnished:

Annunciator	Location	No. of Points
Boiler	Control Panel 1	50
Boiler Trip	Control Panel 1	20
Turbine Generator	Control Panel 1	50
Switchgear	Control Panel 1	20
Boiler	Control Panel 2	50
Boiler Trip	Control Panel 2	20
Turbine Generator	Control Panel 2	50
Switchgear	Control Panel 2	20
Flash Evaporator	Flash Evaporator Panel 1	24

The annunciation equipment shall be Scam Instrument Corporation Panastat Series 70, Rochester Instrument Systems Model AN-100, or acceptable equal. Annunciation equipment shall be installed on control panels as indicated on Drawings K1001, K1002 and K1008 included with these specifications. The annunciator units shall be the illuminated nameplate type, with the illuminated plates measuring approximately 2 inches by 3 inches. Plates shall be engraved in Indonesian with suitable legends as directed by the Engineer.

Annunciators shall employ solid state plug-in type input and alarm flasher modules and shall be furnished complete with power supply. Each annunciator cabinet shall have a separately fused power supply. A separately fused 250 volt dc adjustable audible alarm horn and pushbuttons shall be provided for each control panel. The adjustable alarm horns shall be located in their respective panels.

The boiler trip annunciators shall be "first-out" sequence. The first alarm in each group of ten shall actuate an intermittently fast flashing light and the audible alarm. The annunciation ACKNOWLEDGE push-button will permit silencing the audible alarm manually. After acknowledgment, the intermittently flashing light shall flash at a slower rate. Succeeding annunciations in a group shall be by a steady light and audible alarm operation. Acknowledging these succeeding annunciations shall result in silencing the audible alarm and steady-burning lights. When conditions for the "first-out" alarm have returned to normal, the slowly flashing light shall go out when the FIRST-OUT RESET push-button is operated. The subsequent alarms, which burn steadily after acknowledgment, shall go out automatically upon return to normal. The FIRST-OUT RESET push-button shall be utilized for the groups of "first-out" annunciators only. All sequence lamps shall be furnished with red color boots.

The flash evaporator annunciator shall be of the following sequence. An off normal condition shall actuate a flashing light and audible alarm. After acknowledgment the audible alarm shall be silenced and the white light shall burn steadily. Upon return to normal the white light shall go out, leaving the window ready to accept a new alarm.

The remaining annunciators shall be of the following sequence. An off normal alarm shall actuate a fast flashing white light and audible alarm. After acknowledgment the audible alarm shall be silenced and the white light shall burn steadily. Upon return to normal the white light shall remain on until manually reset. When the RESET push-button is operated, the white light shall go out, leaving the window ready to accept a new alarm.

Two sets of annunciator ACKNOWLEDGE, RESET, and TEST push-buttons and one FIRST-OUT RESET push-button shall be furnished on Control Panels 1 and 2. The FIRST-OUT RESET push-button shall be equipped with a transparent swing-up cover to prevent inadvertent operation. Each annunciator shall be suitable for operation from a 250 volt dc power supply, with not less than 100 volts dc applied to trouble contacts. Each annunciator shall be equipped with an isolating power supply unit which chops, transforms, and rectifies the dc supply into ac and then back to dc. The annunciator shall include filters on input circuits to prevent false operation from induced or transient voltages. Alarm contacts will not be shared by other equipment.

Each annunciator unit shall be mounted in a prewired cabinet. Design of the cabinets shall permit lamp and input module replacement without use of tools. If a separate module cabinet is furnished, all connecting wiring between the annunciator and module cabinet shall also be furnished.

Alarm contacts to actuate the annunciator will be provided by the Owner except as otherwise specifically required in these specifications. Alarm contacts will be either open-to-alarm or closed-to-alarm. Selection of open-to-alarm or closed-to-alarm shall be by selector switch or by use of screw terminal jumpers. Contact mechanisms employed will include control switch contacts, auxiliary switches in motor starters, microswitches, and mercury switches. Alarm contact wiring will be installed in raceways which also are used for motor starter and circuit breaker control. Circuit lengths will range from 5 to 1200 feet. Equipment furnished under this Contract shall operate reliably and shall be free of false operations due to proximity of input circuits to other wiring.

The flash evaporator annunciator shall be furnished with one auxiliary output contact operated by any one of the annunciator windows to actuate the control panel annunciator. The flash evaporator annunciator shall be furnished with a time delay relay to silence the horn. Annunciator ACKNOWLEDGE and TEST push-buttons shall be furnished on the flash evaporator panel.

2D.3 ELECTRICAL ACCESSORY DEVICES. All electrical accessory equipment shall conform to the applicable requirements of Article 1B.26 and to these additional requirements.

Rotary control switch construction features will be specifically described in the electrical schematics which will be furnished by the Engineer later. In general, spring return-to-normal switches will turn clockwise to "start", which produces a red target, and counterclockwise to "stop" which produces a green target. For proposal purposes, SB-1 Switches shall have five stages wired and SB-10 Switches shall have five rotary stages and four lateral stages furnished and wired.

Indicating lights and subpanels shall be Dialco Datalight Series No. 250-7558 or Dialco Data Twin with colors as indicated on subpanel drawings, or acceptable equal. Lens colors shall be as indicated on the subpanel drawings included with these specifications.

2D.4 TOGGLE SWITCHES. Toggle switches shall be furnished, mounted, and wired as indicated in the Instrument List and on the subpanel drawings included with these specifications. Toggle switches shall be Honeywell Micro Switch Catalog Series TL pull-to-unlock.

X 2D.5 WATTHOUR METERS. Watthour meters shall be furnished and installed as indicated in the Instrument List. Meters shall be 3 phase, 3 wire, for use with current transformers and potential transformers. Meters shall be General Electric Company Type DS-63 or acceptable equal. Current transformers will have 5 ampere secondaries, current ratio will be furnished later.

2D.6 PRINTING DEMAND METER. A printing demand meter shall be furnished and installed as indicated in the Instrument List. The meter shall have a 60 minute interval with a self-contained interval timer. A five year supply of 60 minute time interval record rolls shall be furnished with the meter. The meter shall be General Electric Type PD-57F or acceptable equal.

2D.7 TOTALIZER. A totalizer shall be furnished and installed as indicated in the Instrument List. The totalizer shall be solid state with 16 input channels. The totalizer shall have 16 input counters, one output counter and one Form C, 3-wire, isolated, mercury-wetted output relay. The totalizer shall be General Electric Type SST-3 or acceptable equal.

One General Electric Type S-3, Catalog Number 731X2G1 relay shall be furnished with the totalizer.

2D.8 BUZZERS. Two separately fused 250 volt dc adjustable audible buzzers shall be furnished, mounted, and wired as indicated in the Instrument List.

X *Refer to Item 40 of Addendum 1.*

Section 2E - PANELS AND ENCLOSURES

2E.1 GENERAL. The Contractor shall furnish panels and enclosures for all controls and instruments, pressure gages, temperature instruments, and other devices as specified herein, except where devices are specified to be mounted locally.

The requirements specified under CONSTRUCTION, WIRING, TUBING, CONTROL AIR, and NAMEPLATES apply in general to all panels and enclosures. Specific requirements for each panel and enclosure are included later in this section.

The following panels and enclosures shall be furnished:

Control Panels 1 and 2
Pneumatic Systems Racks 1 and 2
Flue Gas Analyzer Cabinets 1 and 2
Synchronizing Panel
Flash Evaporator Panel 1

2E.2 CONSTRUCTION. All panels and enclosures shall be constructed of steel plate of thickness described in the individual panel specifications, and reinforced as required to insure true surfaces and adequate support for the instruments mounted thereon. Unless otherwise specified, the panels and enclosures shall be of one-piece construction. All instrument cutouts, mounting studs, and support brackets shall be located accurately. All welds on the exposed surfaces shall be ground smooth. Finished surfaces shall be free from waves, bellies, or other imperfections. Unless specified otherwise, doors shall be hinged and shall have turned-back edges and additional bracing where required to assure rigidity. Hinges shall be of the piano or concealed type. Door latches shall be of the three-point type to assure tight closing. Exterior surfaces shall be sandblasted, ground smooth, filled, primed, sanded, and finished.

2E.2.1 Painting. Painting shall conform to the applicable requirements of Article 1B.18 and to these additional requirements.

The exterior finish shall be lacquer.

Paint films which show sags, check, blisters, teardrops, or fat edges will not be acceptable and if any such defects appear, they shall be repaired by and at the expense of the Contractor.

2E.3 WIRING. Wiring for the panels shall conform to the applicable requirements of Article 1B.31 and to these additional requirements.

All control and instrument wiring used within the panels shall be installed and tested at the factory. Thermocouple and other special circuits will be field wired direct to instrument terminal blocks without the use of panel wiring.

Wiring to each subpanel and to each rotary control switch shall be individually bundled and shall be installed with a "drop loop" of sufficient length to allow the item to be removed from the panel for maintenance without disconnecting the wiring. Rotary switches will be removed to the internal panel walkway. Subpanels will be removed to the front of the panel bench section.

Wire sizes shall be as tabulated below:

Service	AWG
Control switch wiring	16
Ammeter circuits	12
Honeywell PTW indicating lights	16
Subpanel indicating lights	18
Annunciation	16
Boiler interlocking	16
Power supplies	As required
Control systems	As required
All other	12

2E.3.1 Terminal Blocks. Terminal blocks for the panels shall conform to the applicable requirements of Article 1B.26.8.

2E.3.2 Fuses. Fuses shall conform to the applicable requirements of Article 1B.26.10 and to these additional requirements.

Power supplies for miscellaneous devices shall be provided with fuses located within the panels and enclosures. Fuse ratings will be given on the electrical schematic diagrams.

2E.3.3 Power Sources. A system of convenience 240 volt ac outlets shall be provided in each panel and enclosure for use with power tools, portable

lamps, and other similar equipment. Catalog numbers to be furnished later. The Owner will furnish to each enclosure and the control panel a 240 volt ac circuit to feed the interior lighting, the convenience outlets, and the illuminated indicators.

The control power for circuit breaker and motor control will be provided from supplies external to the panel.

A plug-in bus fed from a separate source shall be provided in the control panel for use with the recorders and temperature monitor.

2E.3.4 Wiring Diagrams. Wiring diagrams shall conform to the applicable requirements of Article 1C.5.

2E.4 TUBING. All pneumatic instrument and control tubing connections between devices within the same panel or enclosure shall be provided, and connections to devices not in the same panel shall be terminated on tubing terminal plates. Tubing shall be installed neatly and mounted securely. Tubing shall be 1/4 inch OD fully annealed copper. Tubing fittings shall be Crawford "Swagelok", Parker "Intru-lok", or Imperial Eastman "Hi-Seal" bite type brass fittings. Terminal plates shall be coded and individual connections marked in accordance with the coding system established by the Engineer. Arrangement of tubing connections on the terminal plates shall facilitate use of multitube assemblies, and shall be acceptable to the Engineer. All terminal plates shall be mounted and arranged for maximum ease in connection of field and panel tubing. Special terminal drawings shall be furnished. The air supplied to the pneumatic devices shall be individually valved.

2E.4.1 Tubing Diagrams. Schematic, connection, and interconnection diagrams shall be furnished by the Contractor.

2E.5 CONTROL AIR. Control air shall conform to the applicable requirements of Article 1B.14 and these additional requirements. A control air supply header shall be furnished in each panel or enclosure, except the synchronizing panel, regardless of the number of pneumatic devices. A dual filter-regulator shall be supplied in each control panel and each pneumatic systems rack to serve all of the pneumatic devices mounted within.

A valve with tubing fittings shall be installed in each hole. Not less than 20 per cent spare connections shall be furnished. In any case not less than ten connections shall be provided in each panel or enclosure. The air header shall originate at a bulkhead fitting located in one of the bulkhead plates.

A 1/2 inch control air header shall be furnished in each panel or enclosure housing draft instruments. The header shall be furnished complete with a pressure regulating valve, pressure gage, and valved quick disconnect connections. A hose for connecting the header to the draft instrument line 4-way valves shall be furnished when required. The service air header shall originate at a bulkhead fitting located in one of the bulkhead plates.

2E.6 NAMEPLATES. Nameplates for the panels shall conform to the applicable requirements of Article 1B.27 and these additional requirements. Phenolic nameplates shall be attached to the panels with stainless steel pan head screws and shall be lettered in Indonesian.

Embossed plastic tape name tags of a design acceptable to the Engineer shall be provided inside panels or enclosures for all devices located there including on the rear of all devices projecting through the panel. Tags shall be embossed with legends as directed by the Engineer.

2E.7 CONTROL PANELS 1 AND 2. Drawings K1001 and K1002 bound within these specifications indicate the outline dimensions of the control panels and the arrangement of controls and instruments on each panel.

The front of each bench shall have four removable sections. Each shall have two chromium plated American Hardware Corporation Corbin flush catches, Catalog No. 2562 or acceptable equal. The removable access panels shall be fabricated from 1/8 inch thick plate, shall have turned-back edges, and shall be designed to be flush with the panel surface. Each control panel shall be fabricated in two sections as indicated on the drawings.

The end and front of the control panels shall have a 10 gage stainless steel kick plate and the benchboard edges shall have 16 gage stainless steel wear strips as indicated on the drawings.

The front, bench, end and back of each panel shall be 3/16 inch plate. The top of the panels shall be open. The right end of Control Panel 1 will be bolted to Control Panel 2. The left end of Control Panel 1 and the right end of Control Panel 2 shall be fitted with industrial hollow metal access doors with chrome latches, striker plates and handles.

The front face of each panel shall be of a graphic design illustrating the plant cycle. Graphic elements shall be engraved 3/16 inch thick brass or aluminum templates fastened to the face of each panel with hidden studs. Symbols of all equipment shall conform to actual outline rather than standard symbols. The symbols shall be painted in colors selected by the Owner.

Mimic bus and symbols shaped, colored, and located as indicated on drawings K1001 and K1002 included with these specifications shall be 1/8 inch thick extruded aluminum with baked enamel finish, attached to the panels by a method that is not apparent when viewed from the front of the panels.

The mimic bus shall be primed and finished with baked enamel after cutting and forming is complete. Mimic bus shall be provided in 5/8 inch width

for the 150 kV, 22 kV, 11.5 kV and 4160 volt main buses. The 416 volt mimic bus shall be 3/8 inch width. Mimic bus colors shall be as follows:

The paint color numbers below are Pittsburg Paint and Glass Company:

Voltage	Bus Color
150 kV	Sunset Orange No. 54-124
22 kV	Jade Green No. 54-130
11.5 kV	Royal Blue No. 54-120
4.16 kV	Autumn Brown No. 54-126
416 V	Fiesta Red No. 54-123
Generator neutral	Silver

All piping, tubing, and electrical connections will enter the panel bottom. The panels shall be designed without bottom cross braces.

Equipment to be installed on or in the control panels is described in Instrument List included with this specification. The bidder's proposal shall include all charges for mounting, tubing, and wiring of all listed equipment, whether the equipment is furnished under these specifications or not. Equipment furnished under other specifications will be shipped to the Contractor's factory. The Contractor shall receive and store the equipment.

Panel cutouts, mounting, wiring and wireways shall be provided to accommodate the following equipment which will be furnished by the Owner for each control panel:

Turbine speed, valve position, and eccentricity recorder (1CP-8 and 2CP-8)

Turbine vibration recorder (1CP-9 and 2CP-9)

Three turbine power units (1CP-211, 1CP-212, 1CP-213, 2CP-211, 2CP-212, and 2CP-213)

Purge and Prelight subpanel (Prefabricated cable connected) (1CP-205 and 2CP-205)

Burner control subpanel (Prefabricated cable connected) (1CP-206 and 2CP-206)

Soot blower subpanel (1CP-214 and 2CP-214)

Turbogenerator tachometer (1CP-56 and 2CP-56)

Turbine control switches (1CP-129, 1CP-131, 1CP-132, 2CP-129, 2CP-131, and 2CP-132)

Turbogenerator load meter (1CP-59 and 2CP-59)

Hydrogen purity meter (1CP-25A and 2CP-25A)

Hydrogen pressure meter (1CP-25B and 2CP-25B)

Generator control and voltage switches (1CP-169, 1CP-170, 1CP-171, 1CP-172, 2CP-169, 2CP-170, 2CP-171, and 2CP-172)

Transfer voltmeters (1CP-53 and 2CP-53)

Generator field voltmeters (1CP-52 and 2CP-52)

Generator field ammeters (1CP-51 and 2CP-51)

The above listed equipment will be shipped to the Contractor complete. The Contractor shall mount the equipment and provide wiring between the equipment and panel terminal strips or devices as required. Wiring of the equipment shall be as indicated on the schematics and wiring diagrams provided by the Engineer.

2E.7.1 Subpanels. Subpanels shall be furnished as listed in the Instrument List and indicated on subpanel drawings included in these specifications. Subpanels shall be fabricated from 1/8 inch thick sheet steel with chamfered edges. They shall attach to the panel with hidden studs. Subpanels shall be painted with the same paint as the panel. Lights and switches shall be wired to panel terminals with No. 20 teflon insulated wire which is bundled with Thomas & Betts nylon tie wraps at intervals no greater than one foot. The nylon tie wraps shall have sufficient surface area to prevent cold flowing of the teflon insulation. A sufficient wiring loop shall be provided to permit removal of the subpanel to the front of the bench section for maintenance. Terminals as described in Article 2E.3 shall be provided for the connection of field wiring.

Indicating lights and switches mounted on subpanels shall be as specified in Section 2D. Nameplates shall be as specified in Article 2E.7.

2E.8 PNEUMATIC SYSTEMS RACKS 1 AND 2. Two open type pneumatic systems racks suitable for mounting pressure switches, solenoid operated valves, and all pneumatic control relays shall be furnished. Each systems rack will be mounted in an air conditioned room beneath the control room. Each systems rack shall be furnished with all components completely mounted, wired, and tubed. Wiring and tubing will enter at the top of each rack. Each rack shall be constructed of structural angles or special punched rack material, with bases suitable for floor mounting. All electrical devices,

including all solenoid valve leads and all pressure switch contacts, shall be wired to terminal blocks in a common NEMA 1 junction box on each pneumatic systems rack. The junction box shall be Hoffman Engineering Company furnished with locks and terminal blocks. The terminal blocks shall be as described in Section 1B.26.8.

2E.9 FLUE GAS ANALYZER CABINETS 1 AND 2. Flue gas analyzer cabinets shall be furnished as described in Article 2C.6.1.

2E.10 SYNCHRONIZING PANEL. A synchronizing panel shall be furnished to mount and house instrument equipment in accordance with the drawing bound with these specifications and the following paragraphs.

The synchronizing panel shall be fabricated from 1/8 inch leveled sheet steel and shall be approximately 36 inches wide, 15 inches high and 12 inches deep. The front face of the panel shall be sloped approximately 15 degrees from the vertical. The rear cover of the panel shall be removable for easy access to the instruments and wiring in the panel. The panel shall be designed for ceiling mounting as indicated on Drawing K1007. Mounting hardware shall be furnished with the panel.

The following material shall be furnished and mounted on the synchronizing panel with arrangement as indicated on Drawing K1007:

1 - Indicating voltmeter 0-150 volt scale, 150 volt coil, approximately 9 inch square face, Westinghouse Electric Corporation Type KA-26. This voltmeter shall be switched to the running bus potential and the face of the scale shall be marked "RUNNING".

1 - Indicating voltmeter 0-150 volt scale, 150 volt coil, approximately 9 inch square face, Westinghouse Electric Corporation Type KA-26. This voltmeter shall be switched to the incoming bus potential and the face of the scale shall be marked "INCOMING".

1 - Synchroscope. This instrument shall have an approximately 9 inch square face and shall be Westinghouse Electric Corporation Type KI-26.

2 - Synchronizing lamps, Dialco No. 19901-537 with No. 6S6-125 lamp, to be connected to indicate synchronism.

The following shall be furnished inside the panel:

One set of terminal blocks for termination of field wiring to the panel and wiring to the above mentioned panel mounted devices.

2E.11 FLASH EVAPORATOR PANEL 1. Drawing K1008 bound within these specifications indicates the outline dimensions of the panel and the arrangement of controls and instrument equipment on the panel.

The panel shall be a Bailey Meter Company Style QAD331, or acceptable equal, 90 inches high by 23 inches wide by 24 inches deep, totally enclosed with access door on the back.

All piping, tubing, and electrical connections will enter the panel bottom. The panel shall be designed without bottom cross bracing.

Equipment to be installed on the panel is described in the Instrument List included with these specifications. The bidder's proposal shall include all charges for mounting, tubing and wiring of all listed equipment.

All control relays required for the flash evaporator system and the annunciator horn shall be mounted inside the panel.

Section 2F - CONTROL VALVES

2F.1 GENERAL. This section covers the design and construction requirements for control valves. Unless otherwise specified all diaphragm control valves shall be manufactured by Fisher Governor Company.

2F.2 CODE REQUIREMENTS. Except as otherwise specified herein, the control valves and accessory equipment shall be designed and constructed in accordance with the latest applicable requirements of the ANSI B31.1 Code for Pressure Piping, the ASME Boiler and Pressure Vessel Code, and other standards referenced herein.

2F.3 CONTROL VALVE SPECIFICATION SHEETS. The Control Valve Specification Sheets included in these specifications list the design and construction parameters for each valve, and the accessory equipment to be provided.

2F.3.1 Valve Sizing. The flow capacity of each valve shall be as indicated on the Control Valve Specification Sheet when operating at the inlet pressure, outlet pressure, and approximate valve travel specified for each set of valve operating conditions. It shall be the Contractor's responsibility to furnish valve port and body sizes adequate to meet the design conditions.

Special consideration shall be given to those valves passing flashing condensate to assure adequate port and body flow area.

2F.3.2 Valve Characteristics. The number of ports on globe valve bodies and the plug types shall be as specified on the Control Valve Specification Sheets.

2F.4 VALVE CONSTRUCTION. Valve construction shall be in accordance with the requirements specified herein and on the Control Valve Specification Sheets.

The design of all valve bodies shall conform to the requirements of ANSI for dimensions, material thickness, and material specifications, in their respective pressure classes.

2F.4.1 Globe Valves. Globe valves shall be straightaway pattern either single or double ported as specified. Double ported valves shall have high lift top and bottom guided plugs unless otherwise specified. Single ported valves shall have high lift top and bottom guided plugs, or top and cylinder guided plugs where valve size does not permit top and bottom guiding. Cage guided valves are acceptable in lieu of top and bottom

guided valves. These valves shall not exceed the leakage rates specified on the Control Valve Specification Sheets. Restricted trim shall be used if necessary to match valve capacity with the minimum preferred body size. The direction of flow through single ported valves shall be flow opening unless otherwise specified.

Where specified on the Control Valve Specification Sheets, valves with cage guided plugs and quick change trim shall be supplied. The quick change trim shall consist of a cage and seat ring clamped in the valve body by the valve bonnet and sealed with a spiral wound stainless steel-asbestos gasket.

The trim shall be removable through the top after bonnet removal without any cutting or welding of the valve. Flow direction shall be flow opening unless otherwise specified.

Direct acting and self-contained pilot type valves may have low lift plugs.

Bonnet joints for all control valves shall be of the flanged and bolted type or other construction acceptable to the Engineer. Bonnet joints shall be designed for easy disassembly and for assurance of correct valve stem alignment. Bonnet joints of the internal threaded or union type will not be acceptable.

Plugs shall be of one-piece construction either cast, forged, or machined from solid bar stock. Plugs shall be screwed and pinned to valve stems or shall be integral with the valve stems.

When teflon packing is used, the lower valve stem which passes through the stuffing box shall be polished to at least 4 microinches rms.

All valves shall be arranged so that the plugs may be removed from the valve bodies from the bonnet side.

2F.4.2 Butterfly Valves. Butterfly type control valves shall be of the flanged or flangeless wafer type and shall have either Type 18-8 stainless steel discs or carbon steel discs with Type 18-8 stainless steel or chrome edges, all as specified on the Control Valve Specification Sheets. Butterfly valves shall have rubber seats in the valve body and Type 18-8 stainless steel shafts, and shall be equipped with position indicators. Seating surfaces on the discs shall be polished. Rubber seats shall be a synthetic rubber that does not contain polyisoprene. The body material shall be as specified on the Control Valve Specification Sheets.

2F.4.3 Ball Valves. Valves specified as "Vee Ball" on the Control Valve Specification Sheets shall be ball valves having a characterized V-notch ball as manufactured by Fisher Governor Company.

2F.4.4 Materials. Valve materials shall be as specified on the Control Valve Specification Sheets. The following table defines the abbreviations used:

Abbreviation	Description
CS	Carbon steel Forged - ASTM A181 Grade 1 or ASTM A105 Cast - ASTM A216 Grade WCB
1-1/4 CR	1-1/4 per cent chromium alloy steel Forged - ASTM A182 Grade F11 Cast - ASTM A217 Grade WC6
2-1/4 CR	2-1/4 per cent chromium alloy steel Forged - ASTM A182 Grade F22 Cast - ASTM A217 Grade WC9
5 CR	5 per cent chromium alloy steel Forged - ASTM A182 Grade F5 Cast - ASTM A217 Grade C5
SS	Stainless steel, AISI Type 316, ASTM A351 Grade CF8M

Unless otherwise specified, all control valves shall have stems, guide bushings, plugs, seat rings, stem lock pins, stuffing box parts including bolts and nuts, and other trim, all made of stainless steel. Valve guide posts and bushings shall be stellite faced for valves where specified. Stellite faced guide posts and bushings shall be differential hardened.

Where stellite facing is not specified, hardened stainless steel shall be furnished for all surfaces subject to wear.

For cage guided valves, the manufacturer's recommended materials may be substituted for the materials specified provided the materials are suitable for the service conditions specified. The manufacturer shall guarantee that the performance of any substituted materials will be equal to or exceed the performance of the specified materials.

2F.4.5 End Preparation. Valve body ends shall be flanged, screwed, socket welding or butt welding type as specified on the Control Valve Specification Sheets. Butt welding ends shall be in accordance with Butt Weld End Preparation Drawing M-526.01 included as part of these specifications.

Screwed, flanged, and socket welding ends shall be in accordance with ANSI standards. Flanged ends shall be of a pressure class equal or greater in pressure-temperature rating to the body design pressure and temperature indicated on the Control Valve Specification Sheets. Unless otherwise specified, steel flanges shall be raised face type and cast iron flanges shall be the flat face type.

2F.5 VALVE OPERATORS. All control valves shall be furnished with pneumatic spring opposed diaphragm, springless diaphragm, or piston operators as specified on the Control Valve Specification Sheets.

Valve operators and stems shall be adequate to handle the unbalanced forces occurring under the specified flow conditions or the maximum differential pressure specified. An adequate allowance of stem force, at least 50 psi per lineal inch of seating surface, shall be provided in the selection of the operator to assure tight seating unless otherwise specified. The operators shall be designed to produce the required stem force with supply air pressure of 60 psi unless otherwise specified.

Diaphragms shall be molded rubber and diaphragm housings shall be of pressed steel construction.

Piston operators may be substituted for diaphragm operators specified on the Control Valve Specification Sheets where stem forces dictate their use. Piston operators shall use cast pistons and cylinders with O-ring seals. O-ring material shall be Viton "A" in high temperature areas. Operators shall be supplied with nameplates which indicate the diaphragm air pressures at full open and full closed positions. For single seated valves the pressures shall be listed for maximum differential and for zero differential across the valve.

2F.6 CONTROL VALVE ACCESSORIES. The following accessory equipment shall be provided as specified on the Control Valve Specification Sheets.

2F.6.1 Air Locks. Air locks shall be designed to shut off the diaphragm loading air line if the supply air pressure to the associated pilot or positioner fails. Air locks shall be of the automatic reset type and shall be furnished with alarms when specified.

2F.6.2 Hand Jacks. Hand jacks shall be provided when specified on the Control Valve Specification Sheets. Hand jacks shall be top mounted unless specified to be side mounted.

2F.6.3 Positioners. Valve positioners shall be provided as specified on the Control Valve Specification Sheets. Valve positioners shall be equipped with bypasses except where the diaphragm operating pressure range differs from the controller loading pressure range. Pressure gages shall be provided for indicating the air supply and diaphragm pressures, and a pressure gage provided to indicate the value of the control signal. Positioners shall be equipped with filter regulator air supply sets and shall be mounted on the valve yokes.

2F.6.4 Cooling Fins. Cooling fin sections shall be used on all valves when the maximum temperature of the flowing fluid is 450 F or greater, or when specifically indicated on the Control Valve Specification Sheets. Pneumatic level controllers connected to pressure vessels operating at saturation temperatures higher than 400 F shall be equipped with cooling fins and/or other means capable of reducing the temperature of all controller parts to less than 125 F. Electronic level controllers shall be equipped with cooling fins if the saturation temperature exceeds 250 F.

2F.6.5 Stem Travel Indicators. Stem travel indicators shall be provided on all valves.

2F.6.6 Limit Switches. Limit switches shall conform to the applicable requirements of Article 1B.25.1, unless otherwise indicated on Control Valve Specification Sheets.

2F.7 CONTROLLERS. Valve controllers shall be provided as indicated on the Control Valve Specification Sheets. Controllers shall be mounted in dust-tight and weatherproof cases having windows for observation of pressure gages. Pneumatic controllers shall be equipped with gages to indicate the values of the supply and control pressures. Controllers shall have adjustable set point and proportional band. Reset action shall be provided as called for on the Control Valve Specification Sheets, and all required equipment shall be mounted inside the controller case. Reset action shall be adjustable. Ranges of controller adjustments shall be not less than the following:

Set point	0-100 per cent of range
Proportional band	10-100 per cent of range on controllers with proportional band and reset 6-50 per cent of range on controllers with proportional band only
Reset	0.05-25 repeats per minute

In special circumstances other ranges of adjustment may be required and will be listed on the Control Valve Specification Sheets. All pneumatic controllers shall be equipped with booster relays, mounted within the controller cases. All pneumatic controllers shall be equipped with reducing valves and filters for their air supplies. If the controller is yoke mounted on the valve, the air supply reducing valve and filter shall also be mounted on the valve, and may be used to supply all of the control air requirements of the controller and valve positioner.

2F.7.1 Liquid Level Controllers. Each liquid level controller shall consist of a pneumatic controller mechanism integrally mounted within an external type float cage. The float shall be of the displacement type approximately 14 inches long and shall be constructed of stainless steel. The float movement shall be transmitted to the pilot mechanism by a torque device incorporating a positive seal between the float cage interior and the controller mechanism without the use of stuffing boxes.

All float cages shall be of fabricated steel construction, 150 psi design pressure unless otherwise specified. Float cages shall have side mounted connections unless otherwise specified. Orifices to prevent surging should be provided in the lower float cage or for the lower float cage connection.

Gage glasses and gage shutoff valves shall be provided for installation directly on the float cages of the level controllers of the control valves as specified on the Control Valve Specification Sheets. Gage glasses and gage valves shall be as follows:

Float Cage Design Pressure	Gage Glasses	Gage Valves
150 psi	3/4 inch OD red backed pyrex tubular type	600 pound forged carbon steel ball check type
300 or 600 psi	Flat glass reflex type with union end connections	600 pound forged carbon steel ball check type

2F.7.2 Pressure Controllers. Each pressure controller shall consist of a pneumatic mechanism containing a bellows or bourdon tube type pressure sensing element built as an integral part of the assembly. Unless otherwise specified, pressure sensing elements shall be as follows:

Maximum Controlled Pressure	Pressure Element Construction
30 inches Hg vac to 15 psi	Ni-Span C bellows
16 psi to 500 psi	Bronze bourdon tube
501 psi and greater	Chromium alloy steel bourdon tube

Overpressure protection for pressure regulating elements shall be provided where the system maximum pressure listed on the Control Valve Specification Sheets would damage the element.

2F.7.3 Temperature Controllers. Each temperature controller shall consist of a pneumatic controller mechanism containing a temperature sensing element built as an integral part of the assembly. The temperature element shall be of either the mercury actuated or gas filled type and provided with a temperature bulb and a stainless steel separable socket for installation in the controlled temperature pipeline. A length of temperature compensated armored capillary tubing shall be furnished interconnecting the temperature bulb and the pilot. Twelve feet of capillary tubing shall be furnished unless otherwise specified.

All temperature controllers shall include reset action and a temperature indicator unless otherwise specified. Temperature indicators shall have pointers indicating set temperature and controlled temperature.

2F.8 SOLENOID VALVES. Solenoid valves shall conform to the applicable requirements of Article 1B.25.5.

2F.9 TUBING AND AIR SETS. All pneumatic tubing required to interconnect devices assembled together shall be furnished complete.

The tubing shall be fully annealed soft temper copper tubing conforming to ASTM B68 or B75. Crawford "Swagelok", Parker "Intru-lok" or Imperial Eastman "Hi-Seal" flareless tubing fittings shall be used for tubing connections.

Each device requiring an air supply shall conform to the applicable requirements of Article 1B.14 and to these additional requirements. Devices mounted together on a valve yoke may be served by a single regulator, providing the single supply pressure is satisfactory and the regulator capacity is not exceeded. Filter regulators shall be mounted on the device served.

2F.10 IDENTIFICATION. Each valve shall have a permanent stamped stainless steel tag bearing a "Valve Number" securely riveted to the valve. "Valve Numbers" shall be as listed in the Control Valve Specification Sheets. Each accessory item furnished with the valve, but not securely attached to the valve, shall be provided with an identical identification tag. Shop drawings and all correspondence shall be identified by the "Valve Number".

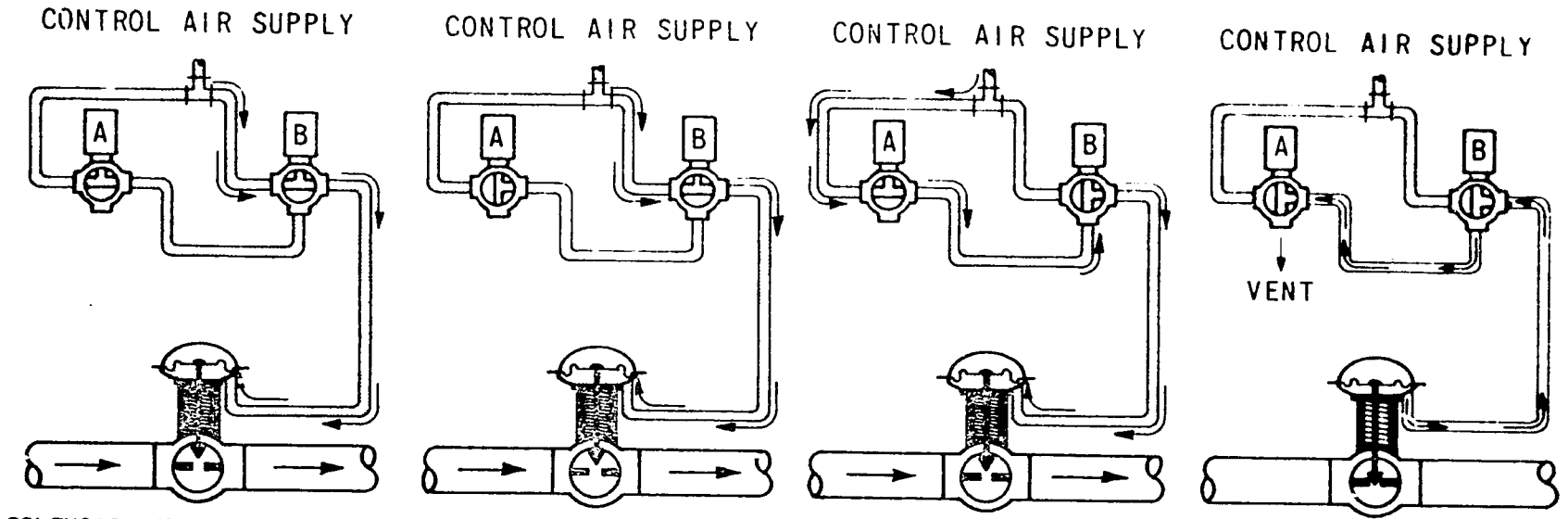

SOLENOID VALVES "A" AND "B"
ENERGIZED
VALVE DIAPHRAGM
AIR LOADED
VALVE OPEN

SOLENOID VALVE "A"
DE-ENERGIZED
VALVE DIAPHRAGM
AIR LOADED
VALVE OPEN

SOLENOID VALVE "B"
DE-ENERGIZED
VALVE DIAPHRAGM
AIR LOADED
VALVE OPEN

SOLENOID VALVES "A" AND "B"
DE-ENERGIZED
VALVE DIAPHRAGM
VENTED
VALVE CLOSED

VALVE TAGS						
	VALVE		SSV-101	SSV-102	SSV-201	SSV-202
	SOLENOID VALVES	A	SV-1020	SV-1022	SV-2020	SV-2022
		B	SV-1021	SV-1023	SV-2021	SV-2023

DATE	REVISION OR ISSUE	NO.	BY

BLACK & VEATCH INTERNATIONAL
CONSULTING ENGINEERS
KANSAS CITY, MO.

PERUSAHAAN UMUM LISTRIK NEGARA
AGENCY OF MINISTRY OF PUBLIC WORKS AND POWER
GOVERNMENT OF REPUBLIC OF INDONESIA
SEMARANG STEAM POWER PLANT
100 (2X50) MW UNITS 1 & 2

SAFETY SHUTOFF VALVE

PROJECT 6104

SHEET 2F-3

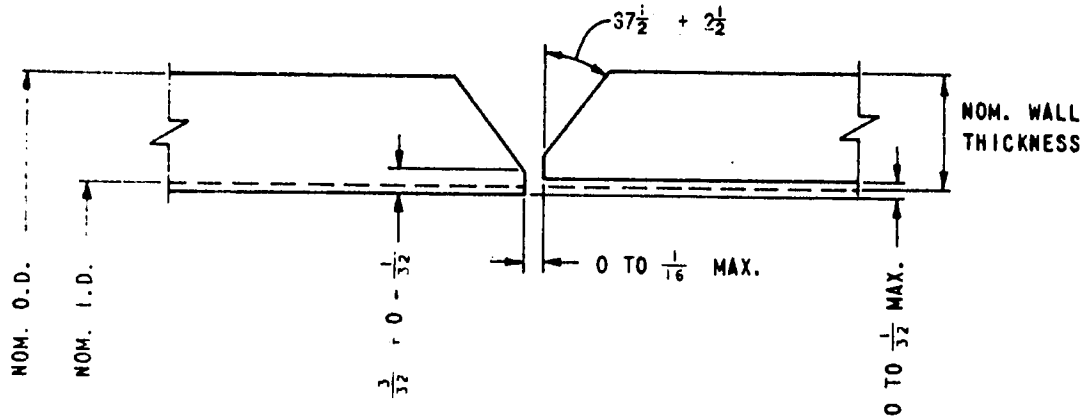

NOMINAL PIPE SIZE	SCH. NO.	NOMINAL PIPE SIZE	SCH. NO.	NOMINAL PIPE SIZE	SCH. NO.	NOMINAL PIPE SIZE	SCH. NO.
2½	40	10	20	18	10	28	10
	80		30		20		STD
	160		40		STD		20
	XXS		60		30		30
3	40		80		XS	30	10
	80		100		40		STD
	160	12	20		60		20
	XXS		30	20	10		30
4	40		STD		20	32	10
	80		40		30		STD
	120		XS		40		20
	160		60	22	10		30
	XXS		80		20		40
5	40	14	10		30	34	10
	80		20	24	10		STD
	120		30		20		20
	160		40		XS		30
	XXS		XS		30		40
6	40		60		40	36	10
	80		80	26	10		STD
	120	16	10		STD		20
	160		20		20		30
8	20		30				40
	30		40				
	40		60				
	60						
	80						
	100						
	120						

BLACK & VEATCH INTERNATIONAL
CONSULTING ENGINEERS
KANSAS CITY, MO.

BUTT WELD END PREPARATION

NO INTERNAL MACHINING

INERT-GAS TUNGSTEN-ARC FIRST PASS WELD

WALL THICKNESS ¾" AND LESS

M-526.01

SHEET 1

REV. A

INSTRUMENT LIST

	Page	through Page
CONTROL PANEL 1		
Recorders	1REC-1	1REC-16
Indicators	1IND-1	1IND-6
Electric Meters	1EM-1	1EM-4
Panel Stations	1PNL-1	1PNL-2
Switches and Lights	1SW-1	1SW-8
Subpanels	1SP-1	1SP-2
Internal Items	1INT-1	
PNEUMATIC CONTROL DRIVES	1PCD-1	
TRANSMITTER EQUIPMENT	1TR-1	1TR-6
PRIMARY ELEMENT DATA SHEETS	1PE-1	1PE-7
CONTROL PANEL 2		
Recorders	2REC-1	2REC-16
Indicators	2IND-1	2IND-6
Electric Meters	2EM-1	2EM-4
Panel Stations	2PNL-1	2PNL-2
Switches and Lights	2SW-1	2SW-8
Subpanels	2SP-1	2SP-2
Internal Items	2INT-1	
PNEUMATIC CONTROL DRIVES	2PCD-1	
TRANSMITTER EQUIPMENT	2TR-1	2TR-6
PRIMARY ELEMENT DATA SHEETS	2PE-1	2PE-3
FLASH EVAPORATOR PANEL 1		
Recorders	EP-1	
Indicators	EP-2	
Switches and Lights	EP-3	
Panel Stations	EP-4	
Subpanels	EP-5	

ITEM NO. 1CP-	DESCRIPTION	NAME PLATE	CHART TYPE		RANGE	TRANSMITTER			REMARKS	PURCHASE SPEC NUMBER
			CIRCULAR	STRIP		DIRECT	PNEUMATIC	ELECTRONIC		
1.	BOILER 1 RECORDER	YES		4"						K-2A
	1. FUEL OIL FLOW				0 TO 6000 GPH		1FT-4 1FT-5			
	2. AIR FLOW				0 TO 100%		1FT-7			
	3. THROTTLE PRESSURE				0 TO 2000 PSIG		1PT-2			
2.	BOILER 1 RECORDER	YES		4"						K-2A
	1. FEEDWATER FLOW				0 TO 750,000 LBS/HR		1FT-1			
	2. STEAM FLOW				0 TO 750,000 LBS/HR		1FT-6			
	3. DRUM LEVEL				-15 TO +15 INCHES WC		1LT-9			

DATE	REVISION OR ISSUE	NO.	BY

BLACK & VEATCH INTERNATIONAL
CONSULTING ENGINEERS
KANSAS CITY, MO.

PERUSAHAAN UMUM LISTRIK NEGARA
AGENCY OF MINISTRY OF PUBLIC WORKS AND POWER
GOVERNMENT OF REPUBLIC OF INDONESIA
SEMARANG STEAM POWER PLANT
100 (2X50) MW UNITS 1 & 2

INSTRUMENT LIST
RECORDERS

PROJECT 6104

SHEET 1REC-1

P C1-C 58A

ITEM NO. 1CP-	DESCRIPTION	NAME PLATE	CHART TYPE		RANGE	TRANSMITTER			REMARKS	PURCHASE SPEC NUMBER
			CIRCULAR	STRIP		DIRECT	PNEUMATIC	ELECTRONIC		
3.	BOILER 1 RECORDER			4"						K-2A
	1. STEAM TEMP				0 TO 650 C		1TT-1			
	DESUPERHEATER 2. OUTLET TEMP				0 TO 500 C		1TT-5			
	DESUPERHEATER 3. SPRAY FLOW				0 TO 75,000 LBS/HR		1FT-2			
4.	TURBINE 1 RECORDER			4"						K-2A
	1. HOTWELL LEVEL				LATER		1LT-6			
	CONDENSER 2. ABSOLUTE PRESS				0 TO 30 IN Hg VAC		1PT-8			
	3. CONDENSATE FLOW				0 TO 500,000 LBS/HR		1FT-3			

DATE	REVISION OR ISSUE	NO.	BY

BLACK & VEATCH INTERNATIONAL
CONSULTING ENGINEERS
KANSAS CITY, MO.

PERUSAHAAN UMUM LISTRIK NEGARA
AGENCY OF MINISTRY OF PUBLIC WORKS AND POWER
GOVERNMENT OF REPUBLIC OF INDONESIA
SEMARANG STEAM POWER PLANT
100 (2X50) MW UNITS 1 & 2

INSTRUMENT LIST
RECORDERS

PROJECT 6104

SHEET 1REC-2

P-C / 0354

ITEM NO. 1CP-	DESCRIPTION	NAME PLATE	CHART TYPE		RANGE	TRANSMITTER			REMARKS	PURCHASE SPEC NUMBER
			CIRCULAR	STRIP		DIRECT	PNEUMATIC	ELECTRONIC		
5.	AIR HEATER 1 RECORDER	YES		4"						K-2A
	1. AIR IN TEMP				0 TO 200 C		1TT-2			
	2. GAS OUT TEMP				0 TO 200 C		1TT-3			
	3. COLD END AVERAGE TEMP				0 TO 200 C		CONTROL			
6.	BOILER 1 RECORDER	YES		4"						K-2A
	FUEL OIL HEADER 1. PRESSURE				0 TO 1500 PSIG		1PT-5			
	2. FUEL OIL TEMP				0 TO 150 C		1TT-4			
	3. FUEL OIL VICOSITY				0 TO 500 SSU		1AT-1			

DATE	REVISION OR ISSUE	NO.	BY

BLACK & VEATCH INTERNATIONAL
CONSULTING ENGINEERS
KANSAS CITY, MO.

PERUSAHAAN UMUM LISTRIK NEGARA
AGENCY OF MINISTRY OF PUBLIC WORKS AND POWER
GOVERNMENT OF REPUBLIC OF INDONESIA
SEMARANG STEAM POWER PLANT
100 (2X50) MW UNITS 1 & 2

INSTRUMENT LIST
RECORDERS

PROJECT 6104

SHEET 1REC-3

C1 036A

ITEM NO. 1CP-	DESCRIPTION	NAME PLATE	CHART TYPE		RANGE	TRANSMITTER			REMARKS	PURCHASE SPEC NUMBER
			CIRCULAR	STRIP		DIRECT	PNEUMATIC	ELECTRONIC		
7.	BOILER 1 RECORDER	YES		4"						K-2A
	1. OXYGEN				0 TO 10%			1AT-2	LOW ALARM CONTACT	
	2. COMBUSTIBLES				0 TO 10%			1AT-2	HIGH ALARM CONTACT	
8.	TURBINE 1 SUPERVISORY	YES							PROVIDE CUTOUT, MOUNT & WIRE	M-10A
	1. SPEED/VALVE POSITION							BY OWNER		
	2. ECCENTRICITY							BY OWNER		

DATE	REVISION OR ISSUE	NO.	BY

BLACK & VEATCH INTERNATIONAL
CONSULTING ENGINEERS
KANSAS CITY, MO.

PERUSAHAAN UMUM LISTRIK NEGARA
AGENCY OF MINISTRY OF PUBLIC WORKS AND POWER
GOVERNMENT OF REPUBLIC OF INDONESIA
SEMARANG STEAM POWER PLANT
100 (2X50) MW UNITS 1 & 2

INSTRUMENT LIST
RECORDERS

PROJECT 6104

SHEET 1REC-4

ITEM NO. 1CP-	DESCRIPTION	NAME PLATE	CHART TYPE		RANGE	TRANSMITTER			REMARKS	PURCHASE SPEC NUMBER
			CIRCULAR	STRIP		DIRECT	PNEUMATIC	ELECTRONIC		
9.	TURBINE 1 SUPERVISORY	YES							PROVIDE CUTOUT, MOUNT & WIRE	M-10A
	1. VIBRATION							BY OWNER		
	SHELL AND 2. DIFF EXPANSION							BY OWNER		
10.	TURBINE 1 TEMP RECORDER			6-1/2"					L&N SPEED-O-MAX H	K-2A
	1. LATER				LATER			TC TYPE K	TC BY OWNER	
	2. LATER				LATER			TC TYPE K	TC BY OWNER	
	3. LATER				LATER			TC TYPE K	TC BY OWNER	
	4. LATER				LATER			TC TYPE K	TC BY OWNER	
	5. LATER				LATER			TC TYPE K	TC BY OWNER	

DATE	REVISION OR ISSUE	NO.	BY

BLACK & VEATCH INTERNATIONAL
CONSULTING ENGINEERS
KANSAS CITY, MO.

PERUSAHAAN UMUM LISTRIK NEGARA
AGENCY OF MINISTRY OF PUBLIC WORKS AND POWER
GOVERNMENT OF REPUBLIC OF INDONESIA
SEMARANG STEAM POWER PLANT
100 (2X50) MW UNITS 1 & 2

INSTRUMENT LIST
RECORDERS

PROJECT 6104

SHEET 1REC-5

ITEM NO.	DESCRIPTION	NAME PLATE	CHART TYPE		RANGE	TRANSMITTER			REMARKS	PURCHASE SPEC NUMBER
			CIRCULAR	STRIP		DIRECT	PNEUMATIC	ELECTRONIC		
10 CONT	6. LATER				LATER			TC TYPE K	TC BY OWNER	
	7. LATER				LATER			TC TYPE K	TC BY OWNER	
	8. LATER				LATER			TC TYPE K	TC BY OWNER	
	9. LATER				LATER			TC TYPE K	TC BY OWNER	
	10. LATER				LATER			TC TYPE K	TC BY OWNER	
	11. LATER				LATER			TC TYPE K	TC BY OWNER	
	12. LATER				LATER			TC TYPE K	TC BY OWNER	

DATE	REVISION OR ISSUE	NO.	BY

BLACK & VEATCH INTERNATIONAL
CONSULTING ENGINEERS
KANSAS CITY, MO.

PERUSAHAAN UMUM LISTRIK NEGARA
AGENCY OF MINISTRY OF PUBLIC WORKS AND POWER
GOVERNMENT OF REPUBLIC OF INDONESIA
SEMARANG STEAM POWER PLANT
100 (2X50) MW UNITS 1 & 2

INSTRUMENT LIST
RECORDERS

PROJECT 6104

SHEET 1REC-6

F C7 C36A

ITEM NO. 1CP-	DESCRIPTION	NAME PLATE	CHART TYPE		RANGE	TRANSMITTER			REMARKS	PURCHASE SPEC NUMBER
			CIRCULAR	STRIP		DIRECT	PNEUMATIC	ELECTRONIC		
11.	GENERATOR 1 STATOR WINDING TEMP RECORDER	YES		9-7/8					L&N SPEED-O-MAX W	K-2A
	1. LATER				LATER			10 OHM RTD	RTD BY OWNER	
	2. LATER				LATER			10 OHM RTD	RTD BY OWNER	
	3. LATER				LATER			10 OHM RTD	RTD BY OWNER	
	4. LATER				LATER			10 OHM RTD	RTD BY OWNER	
	5. LATER				LATER			10 OHM RTD	RTD BY OWNER	
	6. LATER				LATER			10 OHM RTD	RTD BY OWNER	
	7. LATER				LATER			10 OHM RTD	RTD BY OWNER	
	8. LATER				LATER			10 OHM RTD	RTD BY OWNER	
	9. LATER				LATER			10 OHM RTD	RTD BY OWNER	

DATE	REVISION OR ISSUE	NO.	BY

BLACK & VEATCH INTERNATIONAL
CONSULTING ENGINEERS
KANSAS CITY, MO.

PERUSAHAAN UMUM LISTRIK NEGARA
AGENCY OF MINISTRY OF PUBLIC WORKS AND POWER
GOVERNMENT OF REPUBLIC OF INDONESIA
SEMARANG STEAM POWER PLANT
100 (2X50) MW UNITS 1 & 2

INSTRUMENT LIST
RECORDERS

PROJECT 6104

SHEET 1REC-7

P-C1-036A

ITEM NO. 1CP-	DESCRIPTION	NAME PLATE	CHART TYPE		RANGE	TRANSMITTER			REMARKS	PURCHASE SPEC NUMBER
			CIRCULAR	STRIP		DIRECT	PNEUMATIC	ELECTRONIC		
11.CONT.	10. LATER				LATER			10 OHM RTD	RTD BY OWNER	
	11. LATER				LATER			10 OHM RTD	RTD BY OWNER	
	12. LATER				LATER			10 OHM RTD	RTD BY OWNER	
12.	TEMPERATURE MONITOR 1	YES		9-7/8'					L&N SPEED-O-MAX W AND PROGRAMMER	K-2A
	BANK 1									
	1. BANK 1 IDENTIFICATION									
	2. LATER				LATER			TC TYPE K		
	3. LATER				LATER			TC TYPE K		
	4. LATER				LATER			TC TYPE K		

DATE	REVISION OR ISSUE	NO.	BY

BLACK & VEATCH INTERNATIONAL
CONSULTING ENGINEERS
KANSAS CITY, MO.

PERUSAHAAN UMUM LISTRIK NEGARA
AGENCY OF MINISTRY OF PUBLIC WORKS AND POWER
GOVERNMENT OF REPUBLIC OF INDONESIA
SEMARANG STEAM POWER PLANT
100 (2X50) MW UNITS 1 & 2

INSTRUMENT LIST
RECORDERS

PROJECT 6104

SHEET 1REC-8

P C I C36A

ITEM NO. 1CP-	DESCRIPTION	NAME PLATE	CHART TYPE		RANGE	TRANSMITTER			REMARKS	PURCHASE SPEC NUMBER
			CIRCULAR	STRIP		DIRECT	PNEUMATIC	ELECTRONIC		
12.CONT.	5. LATER				LATER			TC TYPE K		
	6. LATER				LATER			TC TYPE K		
	7. LATER				LATER			TC TYPE K		
	8. LATER				LATER			TC TYPE K		
	9. LATER				LATER			TC TYPE K		
	10. LATER				LATER			TC TYPE K		
	11. LATER				LATER			TC TYPE K		
	12. LATER				LATER			TC TYPE K		
	BANK 2									
	1. LATER				LATER			TC TYPE K		

DATE	REVISION OR ISSUE	NO.	BY

BLACK & VEATCH INTERNATIONAL
CONSULTING ENGINEERS
KANSAS CITY, MO.

PERUSAHAAN UMUM LISTRIK NEGARA
AGENCY OF MINISTRY OF PUBLIC WORKS AND POWER
GOVERNMENT OF REPUBLIC OF INDONESIA
SEMARANG STEAM POWER PLANT
100 (2X50) MW UNITS 1 & 2

INSTRUMENT LIST
RECORDERS

PROJECT 6104

SHEET 1REC-9

P-C1 C36A

ITEM NO. ICP-	DESCRIPTION	NAME PLATE	CHART TYPE		RANGE	TRANSMITTER			REMARKS	PURCHASE SPEC NUMBER
			CIRCULAR	STRIP		DIRECT	PNEUMATIC	ELECTRONIC		
12.CONT.	2. BANK 2 IDENTIFICATION									
	3. LATER				LATER			TC TYPE K		
	4. LATER				LATER			TC TYPE K		
	5. LATER				LATER			TC TYPE K		
	6. LATER				LATER			TC TYPE K		
	7. LATER				LATER			TC TYPE K		
	8. LATER				LATER			TC TYPE K		
	9. LATER				LATER			TC TYPE K		
	10. LATER				LATER			TC TYPE K		
	11. LATER				LATER			TC TYPE K		

DATE	REVISION OR ISSUE	NO.	BY

BLACK & VEATCH INTERNATIONAL
CONSULTING ENGINEERS
KANSAS CITY, MO.

PERUSAHAAN UMUM LISTRIK NEGARA
AGENCY OF MINISTRY OF PUBLIC WORKS AND POWER
GOVERNMENT OF REPUBLIC OF INDONESIA
SEMARANG STEAM POWER PLANT
100 (2X50) MW UNITS 1 & 2

INSTRUMENT LIST
RECORDERS

PROJECT 6104

SHEET 1REC-10

ITEM NO. 1CP-	DESCRIPTION	NAME PLATE	CHART TYPE		RANGE	TRANSMITTER			REMARKS	PURCHASE SPEC NUMBER
			CIRCULAR	STRIP		DIRECT	PNEUMATIC	ELECTRONIC		
12.CONT	12. LATER				LATER			TC TYPE K		
	BANK 3									
	1. LATER				LATER			TC TYPE K		
	2. LATER				LATER			TC TYPE K		
	3. BANK 3 IDENTIFICATION									
	4. LATER				LATER			TC TYPE K		
	5. LATER				LATER			TC TYPE K		
	6. LATER				LATER			TC TYPE K		
	7. LATER				LATER			TC TYPE K	TC BY OWNER	
	8. LATER				LATER			TC TYPE K	TC BY OWNER	

DATE	REVISION OR ISSUE	NO.	BY

BLACK & VEATCH INTERNATIONAL
CONSULTING ENGINEERS
KANSAS CITY, MO.

PERUSAHAAN UMUM LISTRIK NEGARA
AGENCY OF MINISTRY OF PUBLIC WORKS AND POWER
GOVERNMENT OF REPUBLIC OF INDONESIA
SEMARANG STEAM POWER PLANT
100 (2X50) MW UNITS 1 & 2

INSTRUMENT LIST
RECORDERS

PROJECT 6104

SHEET 1REC-11

P C / 0364

ITEM NO. 1CP-	DESCRIPTION	NAME PLATE	CHART TYPE		RANGE	TRANSMITTER			REMARKS	PURCHASE SPEC NUMBER
			CIRCULAR	STRIP		DIRECT	PNEUMATIC	ELECTRONIC		
12.CONT.	9. LATER				LATER			TC TYPE K	TC BY OWNER	
	10. LATER				LATER			TC TYPE K	TC BY OWNER	
	11. LATER				LATER			TC TYPE K	TC BY OWNER	
	12. LATER				LATER			TC TYPE K	TC BY OWNER	
	BANK 4									
	1. LATER				LATER			TC TYPE K	TC BY OWNER	
	2. LATER				LATER			TC TYPE K	TC BY OWNER	
	3. LATER				LATER			TC TYPE K	TC BY OWNER	
	4. BANK 4 IDENTIFICATION									
	5. LATER				LATER			TC TYPE K	TC BY OWNER	

DATE	REVISION OR ISSUE	NO.	BY

BLACK & VEATCH INTERNATIONAL
CONSULTING ENGINEERS
KANSAS CITY, MO.

PERUSAHAAN UMUM LISTRIK NEGARA
AGENCY OF MINISTRY OF PUBLIC WORKS AND POWER
GOVERNMENT OF REPUBLIC OF INDONESIA
SEMARANG STEAM POWER PLANT
100 (2X50) MW UNITS 1 & 2

INSTRUMENT LIST
RECORDERS

PROJECT 6104

SHEET 1REC-12

ITEM NO. 1CP-	DESCRIPTION	NAME PLATE	CHART TYPE		RANGE	TRANSMITTER			REMARKS	PURCHASE SPEC NUMBER
			CIRCULAR	STRIP		DIRECT	PNEUMATIC	ELECTRONIC		
12.CONT.	6. LATER				LATER			TC TYPE K	TC BY OWNER	
	7. LATER				LATER			TC TYPE K	TC BY OWNER	
	8. LATER				LATER			TC TYPE K	TC BY OWNER	
	9. LATER				LATER			TC TYPE K	TC BY OWNER	
	10. LATER				LATER			TC TYPE K	TC BY OWNER	
	11. LATER				LATER			TC TYPE K	TC BY OWNER	
	12. LATER				LATER			TC TYPE K	TC BY OWNER	
	BANK 5									
	1. LATER				LATER			TC TYPE K	TC BY OWNER	
	2. LATER				LATER			TC TYPE K	TC BY OWNER	

DATE	REVISION OR ISSUE	NO.	BY

BLACK & VEATCH INTERNATIONAL
CONSULTING ENGINEERS
KANSAS CITY, MO.

PERUSAHAAN UMUM LISTRIK NEGARA
AGENCY OF MINISTRY OF PUBLIC WORKS AND POWER
GOVERNMENT OF REPUBLIC OF INDONESIA
SEMARANG STEAM POWER PLANT
100 (2X50) MW UNITS 1 & 2

INSTRUMENT LIST
RECORDERS

PROJECT 6104

SHEET 1REC-13

ITEM NO. 1CP-	DESCRIPTION	NAME PLATE	CHART TYPE		RANGE	TRANSMITTER			REMARKS	PURCHASE SPEC NUMBER
			CIRCULAR	STRIP		DIRECT	PNEUMATIC	ELECTRONIC		
12.CONT.	3. LATER				LATER			TC TYPE K	TC BY OWNER	
	4. LATER				LATER			TC TYPE K	TC BY OWNER	
	5. BANK 5 IDENTIFICATION									
	6. LATER				LATER			TC TYPE K	TC BY OWNER	
	7. LATER				LATER			TC TYPE K	TC BY OWNER	
	8. LATER				LATER			TC TYPE K	TC BY OWNER	
	9. LATER				LATER			TC TYPE K	TC BY OWNER	
	10.LATER				LATER			TC TYPE K	TC BY OWNER	
	11.LATER				LATER			TC TYPE K	TC BY OWNER	
	12.LATER				LATER			TC TYPE K	TC BY OWNER	

DATE	REVISION OR ISSUE	NO.	BY

BLACK & VEATCH INTERNATIONAL
CONSULTING ENGINEERS
KANSAS CITY, MO.

PERUSAHAAN UMUM LISTRIK NEGARA
AGENCY OF MINISTRY OF PUBLIC WORKS AND POWER
GOVERNMENT OF REPUBLIC OF INDONESIA
SEMARANG STEAM POWER PLANT
100 (2X50) MW UNITS 1 & 2

INSTRUMENT LIST
RECORDERS

PROJECT 6104

SHEET 1REC-14

P.C. 0904

ITEM NO. 1CP-	DESCRIPTION	NAME PLATE	CHART TYPE		RANGE	TRANSMITTER			REMARKS	PURCHASE SPEC NUMBER
			CIRCULAR	STRIP		DIRECT	PNEUMATIC	ELECTRONIC		
12.CONT	BANK 6									
	1. LATER				LATER			TC TYPE K	TC BY OWNER	
	2. LATER				LATER			TC TYPE K	TC BY OWNER	
	3. LATER				LATER			TC TYPE K	TC BY OWNER	
	4. LATER				LATER			TC TYPE K	TC BY OWNER	
	5. LATER				LATER			TC TYPE K	TC BY OWNER	
	6. BANK 6 IDENTIFICATION									
	7. LATER				LATER			TC TYPE K	TC BY OWNER	
	8. LATER				LATER			TC TYPE K	TC BY OWNER	
	9. LATER				LATER			TC TYPE K	TC BY OWNER	

DATE	REVISION OR ISSUE	NO.	BY

BLACK & VEATCH INTERNATIONAL
CONSULTING ENGINEERS
KANSAS CITY, MO.

PERUSAHAAN UMUM LISTRIK NEGARA
AGENCY OF MINISTRY OF PUBLIC WORKS AND POWER
GOVERNMENT OF REPUBLIC OF INDONESIA
SEMARANG STEAM POWER PLANT
100 (2X50) MW UNITS 1 & 2

INSTRUMENT LIST
RECORDERS

PROJECT 6104

SHEET 1REC-15

ITEM NO. 1CP-	DESCRIPTION	NAME PLATE	CHART TYPE		RANGE	TRANSMITTER			REMARKS	PURCHASE SPEC NUMBER
			CIRCULAR	STRIP		DIRECT	PNEUMATIC	ELECTRONIC		
12.CONT	10. LATER				LATER			TC TYPE K	TC BY OWNER	
	11. LATER				LATER			TC TYPE K	TC BY OWNER	
	12. LATER				LATER			TC TYPE K	TC BY OWNER	
13.	CONDUCTIVITY RECORDER	YES		6-1/2'					L&N SPEED-O-MAX H	K-2A
	1. CONDENSATE				LATER			1AT-6		
	2. BFP SUCTION				LATER			1AT-7		
	3. STEAM				LATER			1AT-8		
14.	DISSOLVED OXYGEN RECORDER	YES		6-1/2'					L&N SPEED-O-MAX H	K-2A
	1. UNIT 1 STEAM				LATER			BY OWNER		
	2. UNIT 2 STEAM				LATER			BY OWNER		

DATE	REVISION OR ISSUE	NO.	BY

BLACK & VEATCH INTERNATIONAL
CONSULTING ENGINEERS
KANSAS CITY, MO.

PERUSAHAAN UMUM LISTRIK NEGARA
AGENCY OF MINISTRY OF PUBLIC WORKS AND POWER
GOVERNMENT OF REPUBLIC OF INDONESIA
SEMARANG STEAM POWER PLANT
100 (2X50) MW UNITS 1 & 2

INSTRUMENT LIST
RECORDERS

PROJECT 6104

SHEET 1REC-16

ITEM NO. 1CP-	DESCRIPTION	NAME PLATE	INPUT SIGNAL RANGE / SCALE RANGE	MANUFACTURER AND TYPE	TRANSMITTER SIGNAL E	TRANSMITTER SIGNAL P	TRANSMITTER TAG NUMBER	REMARKS	PURCHASE SPEC NUMBER
21.	BOILER DRUM LEVEL	YES	-12" TO +12"WC	RELIANCE EYE-HYE	X		1LT-10	MINIATURE 10-LIGHT INDICATOR	K-2A
22.	BOILER SYSTEM	YES							K-2A
	A. FEEDWATER PRESSURE		0 TO 2500 PSIG			X	1PT-4		
	ECONOMIZER B. INLET PRESSURE		0 TO 2500 PSIG			X	1PT-9		
	C. BOILER DRUM PRESSURE		0 TO 2500 PSIG			X	1PT-7		
	SUPERHEATER D. OUTLET PRESSURE		0 TO 2000 PSIG			X	1PT-1		
23.	AIR SYSTEM	YES							K-2A
	A. CONTROL AIR PRESSURE		0 TO 150 PSIG	REPUBLIC V-5		X	DIRECT		

DATE	REVISION OR ISSUE	NO.	BY

BLACK & VEATCH INTERNATIONAL
CONSULTING ENGINEERS
KANSAS CITY, MO.

PERUSAHAAN UMUM LISTRIK NEGARA
AGENCY OF MINISTRY OF PUBLIC WORKS AND POWER
GOVERNMENT OF REPUBLIC OF INDONESIA
SEMARANG STEAM POWER PLANT
100 (2X50) MW UNITS 1 & 2

INSTRUMENT LIST
INDICATORS

PROJECT 6104

SHEET 1IND-1

ITEM NO. 1CP-	DESCRIPTION	NAME PLATE	INPUT SIGNAL RANGE / SCALE RANGE	MANUFACTURER AND TYPE	TRANSMITTER SIGNAL E	TRANSMITTER SIGNAL P	TRANSMITTER TAG NUMBER	REMARKS	PURCHASE SPEC NUMBER
23.CONT.	B. PLANT AIR PRESSURE		0 TO 150 PSIG	REPUBLIC V-5		X	DIRECT		
24.	CONDENSATE SYSTEM	YES				X			K-2A
	CONDENSATE PUMP A. DISCH PRESS		0 TO 300 PSIG			X	1PT-10		
	B. HOTWELL LEVEL		LATER			X	1LT-6		
	MAKEUP WATER C. STORAGE LEVEL		LATER			X	1LT-7		
	SERVICE WATER D. STORAGE LEVEL		LATER			X	1LT-8		
25.	GENERATOR HYDROGEN SYSTEM	YES						PROVIDE CUTOUT, MOUNT AND WIRE (OR TUBE)	M-10A
	A. PURITY								

DATE	REVISION OR ISSUE	NO.	BY

BLACK & VEATCH INTERNATIONAL
CONSULTING ENGINEERS
KANSAS CITY, MO.

PERUSAHAAN UMUM LISTRIK NEGARA
AGENCY OF MINISTRY OF PUBLIC WORKS AND POWER
GOVERNMENT OF REPUBLIC OF INDONESIA
SEMARANG STEAM POWER PLANT
100 (2X50) MW UNITS 1 & 2

INSTRUMENT LIST
INDICATORS

PROJECT 6104

SHEET 1IND-2

ITEM NO. LCP-	DESCRIPTION	NAME PLATE	INPUT SIGNAL RANGE / SCALE RANGE	MANUFACTURER AND TYPE	TRANSMITTER SIGNAL E	TRANSMITTER SIGNAL P	TRANSMITTER TAG NUMBER	REMARKS	PURCHASE SPEC NUMBER
25. CONT.	B. PRESSURE								
26.	FUEL OIL SYSTEM	YES							K-2A
	A. IGNITER OIL PRESSURE		0 TO 150 PSIG			X	1PT-11		
	B. FUEL OIL HEADER PRESS		0 TO 1500 PSIG			X	1PT-5		
	C. FUEL OIL BURNER PRESS		0 TO 1500 PSIG			X	1PT-6		
27.	HEATER SYSTEM	YES							K-2A
	A. LP HEATER 1A LEVEL		LATER			X	1LT-4		
	B. LP HEATER 1B LEVEL		LATER			X	1LT-3		

DATE	REVISION OR ISSUE	NO.	BY

BLACK & VEATCH INTERNATIONAL
CONSULTING ENGINEERS
KANSAS CITY, MO.

PERUSAHAAN UMUM LISTRIK NEGARA
AGENCY OF MINISTRY OF PUBLIC WORKS AND POWER
GOVERNMENT OF REPUBLIC OF INDONESIA
SEMARANG STEAM POWER PLANT
100 (2X50) MW UNITS 1 & 2

INSTRUMENT LIST
INDICATORS

PROJECT 6104

SHEET 1IND-3

ITEM NO. 1CP-	DESCRIPTION	NAME PLATE	INPUT SIGNAL RANGE / SCALE RANGE	MANUFACTURER AND TYPE	TRANSMITTER SIGNAL E	TRANSMITTER SIGNAL P	TRANSMITTER TAG NUMBER	REMARKS	PURCHASE SPEC NUMBER
27.CONT.	C. HP HEATER 1C LEVEL		LATER			X	1LT-2		
	D. HP HEATER 1D LEVEL		LATER			X	1LT-1		
	E. DEAERATOR 1E LEVEL		LATER			X	1LT-5		
	F. DEAERATOR PRESSURE		0 TO 125 PSIG			X	1PT-3		
28.	BOILER DRAFT	YES							K-2A
	A. FD FAN DISCH PRESS		0 TO 25"WC	REPUBLIC V-5		X	DIRECT	FURNISH PURGE ROTAMETER AND 4-WAY BACK-BLOWDOWN VALVE	
	B. WINDBOX PRESSURE		0 TO 20"WC	REPUBLIC V-5		X	DIRECT	FURNISH PURGE ROTAMETER AND 4-WAY BACK-BLOWDOWN VALVE	
	C. FURNACE PRESSURE		0 TO 15"WC	REPUBLIC V-5		X	DIRECT	FURNISH PURGE ROTAMETER AND 4-WAY BACK-BLOWDOWN VALVE	
	AIR HEATER D. GAS IN PRESS		0 TO 10"WC	REPUBLIC V-5		X	DIRECT	FURNISH PURGE ROTAMETER AND 4-WAY BACK-BLOWDOWN VALVE	

DATE	REVISION OR ISSUE	NO.	BY

BLACK & VEATCH INTERNATIONAL
CONSULTING ENGINEERS
KANSAS CITY, MO.

PERUSAHAAN UMUM LISTRIK NEGARA
AGENCY OF MINISTRY OF PUBLIC WORKS AND POWER
GOVERNMENT OF REPUBLIC OF INDONESIA
SEMARANG STEAM POWER PLANT
100 (2X50) MW
UNITS 1 & 2

INSTRUMENT LIST
INDICATORS

PROJECT 6104

SHEET 1IND-4

F-1 026 B

ITEM NO. 1CP-	DESCRIPTION	NAME PLATE	INPUT SIGNAL RANGE / SCALE RANGE	MANUFACTURER AND TYPE	TRANSMITTER SIGNAL E	TRANSMITTER SIGNAL P	TRANSMITTER TAG NUMBER	REMARKS	PURCHASE SPEC NUMBER
28.CONT.	AIR HEATER E. GAS OUT PRESS		-2 TO +2"WC	REPUBLIC V-5		X	DIRECT	FURNISH PURGE ROTAMETER AND 4-WAY BACK-BLOWDOWN VALVE	
	WINDBOX-FURNACE F. DIFF PRESS		0 TO 10"WC	REPUBLIC V-5		X	DIRECT	FURNISH PURGE ROTAMETER AND 4-WAY BACK-BLOWDOWN VALVE	
29.	FUEL OIL FLOW INTEGRATOR	YES	X10	FOXBORO 14A		X	CONTROL	FURNISH BRAKE ASSEMBLY	K-2A
30.	FEEDWATER WATER FLOW INTEGRATOR	YES	X1000	FOXBORO 14A		X	CONTROL	FURNISH BRAKE ASSEMBLY	K-2A
31.	DESUPERHEATER SPRAY FLOW INTEGRATOR	YES	X100	FOXBORO 14A		X	CONTROL	FURNISH BRAKE ASSEMBLY	K-2A
32.	BAROMETER	YES	0 TO 35"Hg	MERIAM 31EG10FF		X	DIRECT		K-2A

DATE	REVISION OR ISSUE	NO.	BY

BLACK & VEATCH INTERNATIONAL
CONSULTING ENGINEERS
KANSAS CITY, MO.

PERUSAHAAN UMUM LISTRIK NEGARA
AGENCY OF MINISTRY OF PUBLIC WORKS AND POWER
GOVERNMENT OF REPUBLIC OF INDONESIA
SEMARANG STEAM POWER PLANT
100 (2X50) MW UNITS 1 & 2

INSTRUMENT LIST
INDICATORS

PROJECT 6104

SHEET 1IND-5

ITEM NO. 1CP-	DESCRIPTION	NAME PLATE	INPUT SIGNAL RANGE / SCALE RANGE	MANUFACTURER AND TYPE	TRANSMITTER SIGNAL E	TRANSMITTER SIGNAL P	TRANSMITTER TAG NUMBER	REMARKS	PURCHASE SPEC NUMBER
33.	CONDENSER VACUUM	YES	0 TO 35"Hg	MERIAM 30EG25FF		X	DIRECT		K-2A

DATE	REVISION OR ISSUE	NO.	BY

BLACK & VEATCH INTERNATIONAL
CONSULTING ENGINEERS
KANSAS CITY, MO.

PERUSAHAAN UMUM LISTRIK NEGARA
AGENCY OF MINISTRY OF PUBLIC WORKS AND POWER
GOVERNMENT OF REPUBLIC OF INDONESIA
SEMARANG STEAM POWER PLANT
100 (2X50) MW UNITS 1 & 2

INSTRUMENT LIST
INDICATORS

PROJECT 6104

SHEET 1IND-6

ITEM NO. 1CP-	DESCRIPTION	NAME PLATE	MANUFACTURER TYPE MODEL	INPUT SIGNAL RANGE SCALE RANGE	SIGNAL CONVERTER TAG NO.	REMARKS	PURCHASE SPEC NUMBER
41	BFP 1A AMPS	YES		LATER			K-2A
42	BFP 1B AMPS	YES		LATER			K-2A
43	FD FAN 1 AMPS	YES		LATER			K-2A
44	AIR HEATER 1 AMPS	YES		LATER			K-2A
45	CIRCULATING WATER PUMP 1 AMPS	YES		LATER			K-2A
46	CIRCULATING WATER PUMP 2 AMPS	YES		LATER			K-2A
47	CIRCULATING WATER PUMP 3 AMPS	YES		LATER			K-2A
48	GENERATOR PHASE A AMPS	YES		LATER			K-2A
49	GENERATOR PHASE B AMPS	YES		LATER			K-2A
50	GENERATOR PHASE C AMPS	YES		LATER			K-2A

DATE	REVISION OR ISSUE	NO.	BY

BLACK & VEATCH INTERNATIONAL
CONSULTING ENGINEERS
KANSAS CITY, MO.

PERUSAHAAN UMUM LISTRIK NEGARA
AGENCY OF MINISTRY OF PUBLIC WORKS AND POWER
GOVERNMENT OF REPUBLIC OF INDONESIA
SEMARANG STEAM POWER PLANT
100 (2X50) MW UNITS 1 & 2

INSTRUMENT LIST
ELECTRIC METERS

PROJECT 6104

SHEET 1EM-1

ITEM NO. 1CP-	DESCRIPTION	NAME PLATE	MANUFACTURER TYPE MODEL	INPUT SIGNAL RANGE SCALE RANGE	SIGNAL CONVERTER TAG NO.	REMARKS	PURCHASE SPEC NUMBER
51	GENERATOR FIELD AMPS	YES				PROVIDE CUTOUT, MOUNT AND WIRE	
52	GENERATOR FIELD VOLTS	YES				PROVIDE CUTOUT, MOUNT AND WIRE	
53	TRANSFER VOLTMETER	YES				PROVIDE CUTOUT, MOUNT AND WIRE	
54	GENERATOR VOLTS	YES		LATER			K-2A
55	NOT USED						
56	GENERATOR TACHOMETER	YES		LATER		PROVIDE CUTOUT, MOUNT AND WIRE	M-10A
57	GENERATOR FREQUENCY	YES		LATER			K-2A
58	GENERATOR VARS	YES		LATER			K-2A
59	GENERATOR WATTS	YES		LATER		PROVIDE CUTOUT, MOUNT AND WIRE	M-10A
60	GENERATOR WATTHOURS	YES		LATER			K-2A

DATE	REVISION OR ISSUE	NO.	BY

BLACK & VEATCH INTERNATIONAL
CONSULTING ENGINEERS
KANSAS CITY, MO.

PERUSAHAAN UMUM LISTRIK NEGARA
AGENCY OF MINISTRY OF PUBLIC WORKS AND POWER
GOVERNMENT OF REPUBLIC OF INDONESIA
SEMARANG STEAM POWER PLANT
100 (2X50) MW UNITS 1 & 2

INSTRUMENT LIST
ELECTRIC METERS

PROJECT 6104

SHEET 1EM-2

ITEM NO. 1CP-	DESCRIPTION	NAME PLATE	MANUFACTURER TYPE MODEL	INPUT SIGNAL RANGE / SCALE RANGE	SIGNAL CONVERTER TAG NO.	REMARKS	PURCHASE SPEC NUMBER
61	4160 VOLT SWGR AMPS	YES		LATER			K-2A
62	4160 VOLT SWGR VOLTS	YES		LATER			K-2A
63	4160 VOLT SWGR WATTHOURS	YES		LATER			K-2A
64	RESERVE AUXILIARY TRANSFORMER AMPS	YES		LATER			K-2A
65	MAIN AUXILIARY TRANSFORMER AMPS	YES		LATER			K-2A
66	SUS FEEDER 1 AMPS	YES		LATER			K-2A
67	SUS FEEDER 2 AMPS	YES		LATER			K-2A
68	NOT USED						
69	FUEL OIL SUS FEEDER AMPS	YES		LATER			K-2A
70	TIE AMPS	YES		LATER			K-2A

DATE	REVISION OR ISSUE	NO.	BY

BLACK & VEATCH INTERNATIONAL
CONSULTING ENGINEERS
KANSAS CITY, MO.

PERUSAHAAN UMUM LISTRIK NEGARA
AGENCY OF MINISTRY OF PUBLIC WORKS AND POWER
GOVERNMENT OF REPUBLIC OF INDONESIA
SEMARANG STEAM POWER PLANT
100 (2X50) MW UNITS 1 & 2

INSTRUMENT LIST
ELECTRIC METERS

PROJECT 6104

SHEET 1EM-3

ITEM NO. LCP-	DESCRIPTION	NAME PLATE	MANUFACTURER TYPE MODEL	INPUT SIGNAL RANGE / SCALE RANGE	SIGNAL CONVERTER TAG NO.	REMARKS	PURCHASE SPEC NUMBER
71	PRINTING DEMAND METER	YES	GE PD-57F	LATER			K-2A
72	TOTALIZER	YES	GE SST-3	LATER			K-2A
73	CONDENSATE PUMP 1A	YES		LATER			K-2A
74	CONDENSATE PUMP 1B	YES		LATER			K-2A
75	4160 VOLT SWGR WATTS (MAIN)	YES		LATER			K-2A
76	4160 VOLT SWGR WATTS (RES)	YES		LATER			K-2A
77	4160 VOLT SWGR WATTHOURS (MAIN)	YES		LATER			K-2A

DATE	REVISION OR ISSUE	NO.	BY
11/12/73	ADDENDUM 1	1	[illegible]

BLACK & VEATCH INTERNATIONAL
CONSULTING ENGINEERS
KANSAS CITY, MO.

PERUSAHAAN UMUM LISTRIK NEGARA
AGENCY OF MINISTRY OF PUBLIC WORKS AND POWER
GOVERNMENT OF REPUBLIC OF INDONESIA
SEMARANG STEAM POWER PLANT
100 (2X50) MW UNITS 1 & 2

INSTRUMENT LIST
ELECTRIC METERS

PROJECT 6104

SHEET 1EM-4

ITEM NO. 1CP-	DESCRIPTION	FUNCTION			SIGNAL		AUXILIARY FUNCTION	INDICATOR DATA		REMARKS	PURCHASE SPEC NUMBER
		[illegible]	[illegible]	T	E	P		INPUT SIGNAL	SCALE RANGE		
81	FEEDWATER VALVE 1A	X				X	DRUM LEVEL SET POINT				K-2A
82	FEEDWATER VALVE 1B	X				X	BIAS				K-2A
83	FUEL OIL VALVE 1A	X				X					K-2A
84	FUEL OIL VALVE 1B	X				X	BIAS				K-2A
85	FD FAN INLET VANES	X				X					K-2A
86	FD FAN DISCHARGE DAMPER	X				X					K-2A
87	AIR PREHEAT TEMP	X				X	TEMP SET POINT				K-2A
88	FUEL AIR RATIO		X			X					K-2A
89	STEAM TEMP	X				X	TEMP SET POINT				K-2A
90	CONDENSATE VALVE	X				X	DEAERATOR LEVEL SET POINT			PROVIDE OUTPUT FOR OWNER'S HYDRAZINE CONTROL SYSTEM	K-2A

DATE	REVISION OR ISSUE	NO.	BY

BLACK & VEATCH INTERNATIONAL
CONSULTING ENGINEERS
KANSAS CITY, MO.

PERUSAHAAN UMUM LISTRIK NEGARA
AGENCY OF MINISTRY OF PUBLIC WORKS AND POWER
GOVERNMENT OF REPUBLIC OF INDONESIA
SEMARANG STEAM POWER PLANT
100 (2X50) MW UNITS 1 & 2

INSTRUMENT LIST
PANEL STATIONS

PROJECT 6104

SHEET 1PNL-1

ITEM NO. 1CP-	DESCRIPTION	FUNCTION			SIGNAL		AUXILIARY FUNCTION	INDICATOR DATA		REMARKS	PURCHASE SPEC NUMBER
		H/A	H	T	E	P		INPUT SIGNAL	SCALE RANGE		
91	NOT USED										
92	BOILER MASTER	X				X	PRESS SET POINT				K-2A

DATE	REVISION OR ISSUE	NO.	BY

BLACK & VEATCH INTERNATIONAL
CONSULTING ENGINEERS
KANSAS CITY, MO.

PERUSAHAAN UMUM LISTRIK NEGARA
AGENCY OF MINISTRY OF PUBLIC WORKS AND POWER
GOVERNMENT OF REPUBLIC OF INDONESIA
SEMARANG STEAM POWER PLANT
100 (2X50) MW UNITS 1 & 2

INSTRUMENT LIST
PANEL STATIONS

PROJECT 6104

SHEET 1PNL-2

ITEM NO. 1CP-	DESCRIPTION	NAME PLATE	SWITCH MANUFACTURER MODEL TYPE	LIGHTS MANUFACTURER MODEL TYPE	COLOR RED	WHITE	GREEN	BLUE	AMBER		VOLTAGE	REMARKS	PURCHASE SPEC NUMBER
101	BOILER FEED PUMP 1A	YES	GE SB-1	HONEYWELL PTW	1	1	1						K-2A
102	BFP 1A LUBE OIL PUMP	YES		HONEYWELL PTW	1		1						K-2A
103	MAIN STEAM LINE MOV-101	YES	GE SB-1	HONEYWELL PTW	1		1						K-2A
104	BOILER FEED PUMP 1B	YES	GE SB-1	HONEYWELL PTW	1	1	1						K-2A
105	BFP 1B LUBE OIL PUMP	YES		HONEYWELL PTW	1		1						K-2A
106	NOT USED												
107	FD FAN 1	YES	GE SB-1	HONEYWELL PTW	1	1	1						K-2A
108	AIR HEATER 1	YES	GE SB-1	HONEYWELL PTW	1	1	1						K-2A
109	AIR HEATER 1 LUBE OIL PUMP	YES		HONEYWELL PTW	1		1						K-2A
110	AIR HEATER 1 AIR MOTOR	YES	MICRO-SWITCH PT	HONEYWELL PTW	1		1					SELECTOR SWITCH	K-2A

DATE	REVISION OR ISSUE	NO.	BY

BLACK & VEATCH INTERNATIONAL
CONSULTING ENGINEERS
KANSAS CITY, MO.

PERUSAHAAN UMUM LISTRIK NEGARA
AGENCY OF MINISTRY OF PUBLIC WORKS AND POWER
GOVERNMENT OF REPUBLIC OF INDONESIA
SEMARANG STEAM POWER PLANT
100 (2X50) MW UNITS 1 & 2

INSTRUMENT LIST
SWITCHES AND LIGHTS

PROJECT 6104

SHEET 1SW-1

ITEM NO.	DESCRIPTION	NAME PLATE	SWITCH MANUFACTURER MODEL TYPE	LIGHTS MANUFACTURER MODEL TYPE	COLOR RED	WHITE	GREEN	BLUE	AMBER		VOLTAGE	REMARKS	PURCHASE SPEC NUMBER
111	LIGHT OIL SUPPLY PUMP 1	YES	GE SB-1	HONEYWELL PTW	1	1	1						K-2A
112	FUEL OIL PUMP 1A	YES	GE SB-1	HONEYWELL PTW	1	1	1						K-2A
113	FUEL OIL PUMP 1B	YES	GE SB-1	HONEYWELL PTW	1	1	1						K-2A
114	FLAME DETECTOR AIR BLOWER 1A	YES	GE SB-1	HONEYWELL PTW	1	1	1						K-2A
115	FLAME DETECTOR AIR BLOWER 1B	YES	GE SB-1	HONEYWELL PTW	1	1	1						K-2A
116	CONDENSATE PUMP 1A	YES	GE SB-1	HONEYWELL PTW	1	1	1						K-2A
117	CONDENSATE PUMP 1B	YES	GE SB-1	HONEYWELL PTW	1	1	1						K-2A
118	AUXILIARY COOLING WATER PUMP 1A	YES	GE SB-1	HONEYWELL PTW	1	1	1						K-2A
119	AUXILIARY COOLING WATER PUMP 1B	YES	GE SB-1	HONEYWELL PTW	1	1	1						K-2A
120	TURBINE AUXILIARY OIL PUMP 1	YES	GE SB-1	HONEYWELL PTW	1	1	1						K-2A

DATE	REVISION OR ISSUE	NO.	BY

BLACK & VEATCH INTERNATIONAL
CONSULTING ENGINEERS
KANSAS CITY, MO.

PERUSAHAAN UMUM LISTRIK NEGARA
AGENCY OF MINISTRY OF PUBLIC WORKS AND POWER
GOVERNMENT OF REPUBLIC OF INDONESIA
SEMARANG STEAM POWER PLANT
100 (2X50) MW UNITS 1 & 2

INSTRUMENT LIST
SWITCHES AND LIGHTS

PROJECT 6104

SHEET 1SW-2

ITEM NO. 1CP-	DESCRIPTION	NAME PLATE	SWITCH MANUFACTURER MODEL TYPE	LIGHTS MANUFACTURER MODEL TYPE	COLOR RED	WHITE	GREEN	BLUE	AMBER		VOLTAGE	REMARKS	PURCHASE SPEC NUMBER
121	AC TURBINE BEARING AND SEAL OIL PUMP 1	YES	GE SB-1	HONEYWELL PTW	1	1	1						K-2A
122	DC TURBINE BEARING AND SEAL OIL PUMP 1	YES	GE SB-1	HONEYWELL PTW	1	1	1						K-2A
123	TURNING GEAR 1	YES	GE SB-1	HONEYWELL PTW	1	1	1						K-2A
124	TURNING GEAR 1 CLUTCH	YES		HONEYWELL PTW	1		1						K-2A
125	GLAND EXHAUSTER 1	YES	GE SB-1	HONEYWELL PTW	1	1	1						K-2A
126	LUBE OIL RESERVOIR EXHAUSTER 1	YES	GE SB-1	HONEYWELL PTW	1	1	1						K-2A
127	BEARING DRAIN ENLARGEMENT BLOWER 1	YES	GE SB-1	HONEYWELL PTW	1	1	1						K-2A
128	LUBE OIL CONDITIONER 1	YES	GE SB-1	HONEYWELL PTW	1	1	1						K-2A
129	TURBINE GOVERNOR CONTROL 1	YES	GE SB-1	HONEYWELL PTW	1	1	1					PROVIDE CUTOUT, MOUNT AND WIRE	M-10A
130	ELECTROMATIC RELIEF VALVE	YES	GE SB-1	HONEYWELL PTW	1		1	1					K-2A

DATE	REVISION OR ISSUE	NO.	BY

BLACK & VEATCH INTERNATIONAL
CONSULTING ENGINEERS
KANSAS CITY, MO.

PERUSAHAAN UMUM LISTRIK NEGARA
AGENCY OF MINISTRY OF PUBLIC WORKS AND POWER
GOVERNMENT OF REPUBLIC OF INDONESIA
SEMARANG STEAM POWER PLANT
100 (2X50) MW UNITS 1 & 2

INSTRUMENT LIST
SWITCHES AND LIGHTS

PROJECT 6104

SHEET 1SW-3

ITEM NO. 1CP-	DESCRIPTION	NAME PLATE	SWITCH MANUFACTURER MODEL TYPE	LIGHTS MANUFACTURER MODEL TYPE	COLOR RED	WHITE	GREEN	BLUE	AMBER		VOLTAGE	REMARKS	PURCHASE SPEC NUMBER
131	TURBINE 1 STOP VALVE TEST	YES	PUSHBUTTON	HONEYWELL PTW	1	1	1					PROVIDE CUTOUT, MOUNT AND WIRE, FURNISH INDICATING LIGHTS	M-10A
132	TURBINE 1 TRIP SOLENOID RESET	YES	PUSHBUTTON		1		1					PROVIDE CUTOUT, MOUNT AND WIRE, FURNISH INDICATING LIGHTS	M-10A
133	TURBINE 1 OIL PUMP NOT IN AUTO	YES		HONEYWELL PTW				3					K-2A
134	AIR PREHEATING COIL PUMP 1A	YES	GE SB-1	HONEYWELL PTW	1	1	1						K-2A
135	AIR PREHEATING COIL PUMP 1B	YES	GE SB-1	HONEYWELL PTW	1	1	1						K-2A
136	CIRCULATING WATER PUMP 1	YES	GE SB-10	HONEYWELL PTW	1	1	1						K-2A
137	CIRCULATING WATER PUMP 1 DISCH VALVE	YES		HONEYWELL PTW	1		1						K-2A
138	CIRCULATING WATER PUMP 2	YES	GE SB-10	HONEYWELL PTW	1	1	1						K-2A
139	CIRCULATING WATER PUMP 2 DISCH VALVE	YES		HONEYWELL PTW	1		1						K-2A
140	CIRCULATING WATER PUMP 3	YES	GE SB-10	HONEYWELL PTW	1	1	1						K-2A

DATE	REVISION OR ISSUE	NO.	BY

BLACK & VEATCH INTERNATIONAL
CONSULTING ENGINEERS
KANSAS CITY, MO.

PERUSAHAAN UMUM LISTRIK NEGARA
AGENCY OF MINISTRY OF PUBLIC WORKS AND POWER
GOVERNMENT OF REPUBLIC OF INDONESIA
SEMARANG STEAM POWER PLANT
100 (2X50) MW UNITS 1 & 2

INSTRUMENT LIST
SWITCHES AND LIGHTS

PROJECT 6104

SHEET 1SW-4

ITEM NO. 1CP-	DESCRIPTION	NAME PLATE	SWITCH	LIGHTS									PURCHASE SPEC NUMBER
			MANUFACTURER MODEL TYPE	MANUFACTURER MODEL TYPE	COLOR						VOLTAGE	REMARKS	
					RED	WHITE	GREEN	BLUE	AMBER				
141	CIRCULATING WATER PUMP 3 DISCH VALVE	YES		HONEYWELL PTW	1		1						K-2A
142	FIRE PUMP 1	YES	GE SB-1	HONEYWELL PTW	1	1	1						K-2A
143	GENERATOR VOLTS	YES	GE SB-1									TRANSFER SWITCH FOR 1CP-54	K-2A
144	4160 V SWGR BUS VOLTS	YES	GE SB-1									TRANSFER SWITCH FOR 1CP-62	K-2A
145	ANNUNCIATOR ACKNOWLEDGE	YES	PUSHBUTTON										K-2A
146	ANNUNCIATOR RESET	YES	PUSHBUTTON										K-2A
147	ANNUNCIATOR TEST	YES	PUSHBUTTON										K-2A
148	ANNUNCIATOR FIRST-OUT RESET	YES	PUSHBUTTON									GUARDED	K-2A
149	OCB NO. 3 SYNCH	YES	GE SB-1										K-2A
150	OCB NO. 3	YES	GE SB-1	HONEYWELL PTW	1	1	1						K-2A

DATE	REVISION OR ISSUE	NO.	BY

BLACK & VEATCH INTERNATIONAL
CONSULTING ENGINEERS
KANSAS CITY, MO.

PERUSAHAAN UMUM LISTRIK NEGARA
AGENCY OF MINISTRY OF PUBLIC WORKS AND POWER
GOVERNMENT OF REPUBLIC OF INDONESIA
SEMARANG STEAM POWER PLANT
100 (2X50) MW UNITS 1 & 2

INSTRUMENT LIST
SWITCHES AND LIGHTS

PROJECT 6104

SHEET 1SW-5

ITEM NO. ICP-	DESCRIPTION	NAME PLATE	SWITCH MANUFACTURER MODEL TYPE	LIGHTS MANUFACTURER MODEL TYPE	COLOR RED	WHITE	GREEN	BLUE	AMBER	VOLTAGE	REMARKS	PURCHASE SPEC NUMBER
151	4160 V SWGR RESERVE BREAKER	YES	GE SB-1	HONEYWELL PTW	1	1	1					K-2A
152	4160 V SWGR MAIN BREAKER	YES	GE SB-1	HONEYWELL PTW	1	1	1					K-2A
153	SUS MAIN TRANSFORMER	YES	GE SB-1	HONEYWELL PTW	1	1	1					K-2A
154	SUS 1 AND 2 RESERVE TRANSFORMER	YES	GE SB-1	HONEYWELL PTW	1	1	1					K-2A
155	NOT USED											
156	FUEL OIL STORAGE SUS TRANSFORMER	YES	GE SB-1	HONEYWELL PTW	1	1	1					K-2A
157	4160 V SWGR TIE BREAKER	YES	GE SB-1	HONEYWELL PTW	1	1	1					K-2A
158	OCB NO. 2 SYNCH	YES	GE SB-1									K-2A
159	OCB NO. 2	YES	GE SB-1	HONEYWELL PTW	1	1	1					K-2A
160	TO OCB NO. 1	YES									FURNISH NAMEPLATE ONLY	K-2A

DATE	REVISION OR ISSUE	NO.	BY

BLACK & VEATCH INTERNATIONAL
CONSULTING ENGINEERS
KANSAS CITY, MO.

PERUSAHAAN UMUM LISTRIK NEGARA
AGENCY OF MINISTRY OF PUBLIC WORKS AND POWER
GOVERNMENT OF REPUBLIC OF INDONESIA
SEMARANG STEAM POWER PLANT
100 (2X50) MW
UNITS 1 & 2

INSTRUMENT LIST
SWITCHES AND LIGHTS

PROJECT 6104

SHEET 1SW-6

ITEM NO. 1CP-	DESCRIPTION	NAME PLATE	SWITCH MANUFACTURER MODEL TYPE	LIGHTS MANUFACTURER MODEL TYPE	COLOR RED	WHITE	GREEN	BLUE	AMBER		VOLTAGE	REMARKS	PURCHASE SPEC NUMBER
161	4160 V SWGR RESERVE BREAKER SYNCH	YES	GE SB-1										K-2A
162	4160 V SWGR MAIN BREAKER SYNCH	YES	GE SB-1										K-2A
163	SUS MAIN BREAKER	YES	GE SB-1	HONEYWELL PTW	1	1	1						K-2A
164	SUS RESERVE BREAKER	YES	GE SB-1	HONEYWELL PTW	1	1	1						K-2A
165	(NAMEPLATE ENGRAVING LATER)	YES										FURNISH NAMEPLATE ONLY	K-2A
166	NOT USED												
167	TO 4160 V SWGR 2	YES										FURNISH NAMEPLATE ONLY	K-2A
168	RESERVE TRANSFORMER	YES		HONEYWELL PTW	1	1	1					FURNISH NAMEPLATE, DUMMY SWITCH, AND LIGHTS	K-2A
169	GENERATOR FIELD BREAKER	YES										PROVIDE CUTOUT, MOUNT AND WIRE	
170	VOLTAGE REGULATOR TRANSFER	YES										PROVIDE CUTOUT, MOUNT AND WIRE	

DATE	REVISION OR ISSUE	NO.	BY

BLACK & VEATCH INTERNATIONAL
CONSULTING ENGINEERS
KANSAS CITY, MO.

PERUSAHAAN UMUM LISTRIK NEGARA
AGENCY OF MINISTRY OF PUBLIC WORKS AND POWER
GOVERNMENT OF REPUBLIC OF INDONESIA
SEMARANG STEAM POWER PLANT
100 (2X50) MW UNITS 1 & 2

INSTRUMENT LIST
SWITCHES AND LIGHTS

PROJECT 6104

SHEET 1SW-

ITEM NO. 1CP-	DESCRIPTION	NAME PLATE	SWITCH MANUFACTURER MODEL TYPE	LIGHTS MANUFACTURER MODEL TYPE	COLOR RED	WHITE	GREEN	BLUE	AMBER		VOLTAGE	REMARKS	PURCHASE SPEC NUMBER
171	GENERATOR FIELD AUTO REGULATOR	YES										PROVIDE CUTOUT, MOUNT AND WIRE	
172	GENERATOR FIELD	YES										PROVIDE CUTOUT, MOUNT AND WIRE	
173	TRANSFORMERS PARALLELED	YES		HONEYWELL PTW				2					K-2A
174	DESUPERHEAT SPRAY SUPPLY VALVE	YES	GE SB-1	HONEYWELL PTW	1		1						K-2A
175	DESUPERHEAT SPRAY STOP VALVE	YES	GE SB-1	HONEYWELL PTW	1		1						K-2A
176	DESUPERHEAT SPRAY STOP VALVE	YES	GE SB-1	HONEYWELL PTW	1		1						K-2A
177	ANNUNCIATOR ACKNOWLEDGE	YES	PUSH-BUTTON										K-2A
178	ANNUNCIATOR RESET	YES	PUSH-BUTTON										K-2A
179	ANNUNCIATOR TEST	YES	PUSH-BUTTON										K-2A
180	MAKEUP WATER TRANSFER PUMP 1	YES	GE SB-10	HONEYWELL PTW	1	1	1						K-2A

DATE	REVISION OR ISSUE	NO.	BY

BLACK & VEATCH INTERNATIONAL
CONSULTING ENGINEERS
KANSAS CITY, MO.

PERUSAHAAN UMUM LISTRIK NEGARA
AGENCY OF MINISTRY OF PUBLIC WORKS AND POWER
GOVERNMENT OF REPUBLIC OF INDONESIA
SEMARANG STEAM POWER PLANT
100 (2X50) MW UNITS 1 & 2

INSTRUMENT LIST
SWITCHES AND LIGHTS

PROJECT 6104

SHEET 1SW-8

ITEM NO. 1CP-	DESCRIPTION	TYPE	OVERALL SIZE WIDTH X HEIGHT (IN.)	REFERENCE DRAWING	REMARKS	PURCHASE SPEC NUMBER
201	BOILER ANNUNCIATOR				5 HIGH BY 10 WIDE	K-2A
202	BOILER TRIP ANNUNCIATOR				2 HIGH BY 10 WIDE FIRST-OUT SEQUENCE	K-2A
203	TURBINE-GENERATOR ANNUNCIATOR				5 HIGH BY 10 WIDE	K-2A
204	SWITCHGEAR ANNUNCIATOR				2 HIGH BY 10 WIDE	K-2A
205	PURGE AND PRELIGHT SUBPANEL		LATER		PROVIDE CUTOUT, MOUNT AND WIRE	M-34A
206	BURNER CONTROL SUBPANEL		LATER		PROVIDE CUTOUT, MOUNT AND WIRE	M-34A
207	TURBINE PROTECTION SUBPANEL		17X7-1/2"	K1003		K-2A
208	BOILER EMERGENCY TRIP		5X3	K1005		K-2A
209	TURBINE EMERGENCY TRIP		5X3	K1005		K-2A
210	NOT USED					

DATE	REVISION OR ISSUE	NO.	BY

BLACK & VEATCH INTERNATIONAL
CONSULTING ENGINEERS
KANSAS CITY, MO.

PERUSAHAAN UMUM LISTRIK NEGARA
AGENCY OF MINISTRY OF PUBLIC WORKS AND POWER
GOVERNMENT OF REPUBLIC OF INDONESIA
SEMARANG STEAM POWER PLANT
100 (2X50) MW UNITS 1 & 2

INSTRUMENT LIST
SUBPANELS

PROJECT 6104

SHEET 1SP-1

ITEM NO. 1CP-	DESCRIPTION	TYPE	OVERALL SIZE WIDTH X HEIGHT (IN.)	REFERENCE DRAWING	REMARKS	PURCHASE SPEC NUMBER
211	TURBINE SPEED, VALVE POSITION AND ECCENTRICITY POWER UNIT		LATER		PROVIDE CUTOUT, MOUNT AND WIRE	M-10A
212	EXPANSION POWER UNIT		LATER		PROVIDE CUTOUT, MOUNT AND WIRE	M-10A
213	VIBRATION POWER UNIT		LATER		PROVIDE CUTOUT, MOUNT AND WIRE	M-10A
214	SOOT BLOWER SUBPANEL		LATER		PROVIDE CUTOUT, MOUNT AND WIRE	M-34A

DATE	REVISION OR ISSUE	NO.	BY

BLACK & VEATCH INTERNATIONAL
CONSULTING ENGINEERS
KANSAS CITY, MO.

PERUSAHAAN UMUM LISTRIK NEGARA
AGENCY OF MINISTRY OF PUBLIC WORKS AND POWER
GOVERNMENT OF REPUBLIC OF INDONESIA
SEMARANG STEAM POWER PLANT
100 (2X50) MW UNITS 1 & 2

INSTRUMENT LIST
SUBPANELS

PROJECT 6104

SHEET 1SP-2

ITEM NO. 1CP-	DESCRIPTION	REMARKS	PURCHASE SPEC NUMBER
231	ANNUNCIATOR HORN	AS REQUIRED BY ANNUNCIATOR	K-2A
232	TEMPERATURE MONITOR MULTI-BANK INPUTS	LEEDS & NORTHRUP	K-2A
233	ALARM MODULES	MOORE INDUSTRIES SERIES TCA DUAL ALARM TRIP WITH OPTION DD (DOWNSCALE OPEN INPUT DRIVE)	K-2A
234	TOTALIZER RELAY	GE TYPE S-3, CATALOG NO. 731X2G1	K-2A
235	RELAY CONTROL UNIT	CLARK-RELIANCE	K-2A
236	TRANSFORMERS IN PARALLEL ALARM BUZZER	FURNISH FOR 1CP-173	K-2A
237	SYNCHRONISM CHECK RELAY	WESTINGHOUSE CVE-1 (OR EQUAL) WITH HOT LINE DEAD BUS OR DEAD LINE HOT BUS FEATURE	K-2A

DATE	REVISION OR ISSUE	NO.	BY

BLACK & VEATCH INTERNATIONAL
CONSULTING ENGINEERS
KANSAS CITY, MO.

PERUSAHAAN UMUM LISTRIK NEGARA
AGENCY OF MINISTRY OF PUBLIC WORKS AND POWER
GOVERNMENT OF REPUBLIC OF INDONESIA
SEMARANG STEAM POWER PLANT
100 (2X50) MW UNITS 1 & 2

INSTRUMENT LIST
INTERNAL ITEMS

PROJECT 6104

SHEET 1INT-1

ITEM NO.	DESCRIPTION	OPERATING TORQUE FT-LB	NO LOAD SPEED SEC	TYPE		ENCLOSURE			ADJUSTABLE LIMIT STOPS		AIR FAILURE BRAKE
				SIMPLE CYLINDER	MODULATING	OPEN	DUST TIGHT	FREEZE PROOFED	MAXIMUM	MINIMUM	
1PCD-1	FD FAN INLET VANES	1600			X		X		X	X	
1PCD-2	FD FAN DISCHARGE DAMPER	2000			X		X		X	X	

ITEM NO.	SOLENOID VALVE				LIMIT SWITCHES		POSITION TRANSMITTER	MANUAL OPERATOR	MAN-AUTO SELECTOR STATION	LINKAGE DRAWINGS	REMARKS	PURCHASE SPEC NUMBER
	3-WAY	4-WAY	A-C	D-C	OPEN	CLOSED						
1PCD-1					2 DPDT	2 DPDT		X		X		K-2A
1PCD-2					2 DPDT	2 DPDT		X		X		K-2A

DATE	REVISION OR ISSUE	NO.	BY

BLACK & VEATCH INTERNATIONAL
CONSULTING ENGINEERS
KANSAS CITY, MO.

PERUSAHAAN UMUM LISTRIK NEGARA
AGENCY OF MINISTRY OF PUBLIC WORKS AND POWER
GOVERNMENT OF REPUBLIC OF INDONESIA
SEMARANG STEAM POWER PLANT
100 (2X50) MW UNITS 1 & 2

INSTRUMENT LIST
PNEUMATIC CONTROL DRIVES

PROJECT 6104

SHEET 1PCD-1

C: 019-A

ITEM NO.	DESCRIPTION	TRANSMITS TO	TRANSMITTER INFORMATION SIGNAL E	SIGNAL P	RANGE	PRIMARY DEVICE	SYSTEM MAXIMUM PRESS.	TEMP.	VALVES REQ'D	REMARKS	PURCHASE SPEC NUMBER
1AT-1	FUEL OIL VISCOSITY	1CP-6.3		X	0 TO 500 SSU				NO	PROVIDE E/P TRANSDUCER	K-2A
1AT-2	FLUE GAS ANALYZER	1CP-7.1 1CP-7.2	X		0 TO 10%				AS REQ'D	2 ALARM CONTACTS LOW O2 AND HIGH COMBUSTIBLES	K-2A
1AT-3	BRINE CONDUCTIVITY	EP-2.2 CONTROL	X		LATER				AS REQ'D	2 ALARM CONTACTS FURNISH E/P TRANSDUCER	K-2A
1AT-4	DISTILLATE CONDUCTIVITY	EP-2.1	X		LATER				AS REQ'D	2 ALARM CONTACTS	K-2A
1AT-5	CYCLE MAKEUP CONDUCTIVITY	EP-2.3	X		LATER				AS REQ'D	2 ALARM CONTACTS	K-2A
1AT-6	CONDENSATE CONDUCTIVITY	1CP-13.1	X		LATER				AS REQ'D	2 ALARM CONTACTS	K-2A
1AT-7	BFP SUCTION CONDUCTIVITY	1CP-13.2	X		LATER				AS REQ'D	2 ALARM CONTACTS	K-2A
1AT-8	STEAM CONDUCTIVITY	1CP-13.3	X		LATER				AS REQ'D	2 ALARM CONTACTS	K-2A

DATE	REVISION OR ISSUE	NO.	BY

BLACK & VEATCH INTERNATIONAL
CONSULTING ENGINEERS
KANSAS CITY, MO.

PERUSAHAAN UMUM LISTRIK NEGARA
AGENCY OF MINISTRY OF PUBLIC WORKS AND POWER
GOVERNMENT OF REPUBLIC OF INDONESIA
SEMARANG STEAM POWER PLANT
100 (2X50) MW UNITS 1 & 2

INSTRUMENT LIST
TRANSMITTER EQUIPMENT

PROJECT 6104

SHEET 1TR-1

ITEM NO.	DESCRIPTION	TRANSMITS TO	TRANSMITTER INFORMATION				SYSTEM MAXIMUM		VALVES REQ'D	REMARKS	PURCHASE SPEC NUMBER
			SIGNAL		RANGE	PRIMARY DEVICE	PRESS.	TEMP.			
			E	P							
1FT-1	FEEDWATER FLOW	1CP-2.1 CONTROL		X	0 TO 750,000 #/HR	NOZZLE			5		K-2A
1FT-2	DESUPERHEATER SPRAY WATER FLOW	1CP-3.3 CONTROL		X	0 TO 75,000 #/HR	NOZZLE			5		K-2A
1FT-3	CONDENSATE FLOW	1CP-4.3 CONTROL		X	0 TO 500,000 #/HR	ORIFICE			5		K-2A
1FT-4	FUEL OIL SUPPLY FLOW	1CP-1.1 CONTROL		X	0 TO 6000 GPH	AREA METER			NO		K-2A
1FT-5	FUEL OIL RETURN FLOW	1CP-1.1 CONTROL		X	0 TO 6000 GPH	AREA METER			NO		K-2A
1FT-6	STEAM FLOW	1CP-2.2 CONTROL		X	0 TO 750,000 #/HR	1ST STAGE PRESS			2		K-2A
1FT-7	AIR FLOW	1CP-1.2 CONTROL		X	0 TO 100%	LATER			NO		K-2A
1FT-8	FLASH EVAPORATOR MAKEUP FLOW	EP-1 CONTROL		X	LATER	NOZZLE			5		K-2A
1FT-9	FLASH EVAPORATOR BLOWDOWN FLOW	EP-1 CONTROL		X	LATER	NOZZLE			5		K-2A
1FT-10	FLASH EVAPORATOR COOLING WATER FLOW	LOCAL METER			LATER	ANNUBAR			5	PROVIDE ELLISON TRANSMITTER & LOCAL METER	K-2A

DATE	REVISION OR ISSUE	NO.	BY

BLACK & VEATCH INTERNATIONAL
CONSULTING ENGINEERS
KANSAS CITY, MO.

PERUSAHAAN UMUM LISTRIK NEGARA
AGENCY OF MINISTRY OF PUBLIC WORKS AND POWER
GOVERNMENT OF REPUBLIC OF INDONESIA
SEMARANG STEAM POWER PLANT
100 (2X50) MW UNITS 1 & 2

INSTRUMENT LIST
TRANSMITTER EQUIPMENT

PROJECT 6104

SHEET 1TR-2

P : 019-B

ITEM NO.	DESCRIPTION	TRANSMITS TO	TRANSMITTER INFORMATION SIGNAL E	SIGNAL P	RANGE	PRIMARY DEVICE	SYSTEM MAXIMUM PRESS.	TEMP.	VALVES REQ'D	REMARKS	PURCHASE SPEC NUMBER
1FT-11	DESALINATION FEEDWATER FLOW	LOCAL METER		X	LATER	ANNUBAR			5	PROVIDE ELLISON TRANSMITTER & LOCAL METER	K-2A

DATE	REVISION OR ISSUE	NO.	BY

BLACK & VEATCH INTERNATIONAL
CONSULTING ENGINEERS
KANSAS CITY, MO.

PERUSAHAAN UMUM LISTRIK NEGARA
AGENCY OF MINISTRY OF PUBLIC WORKS AND POWER
GOVERNMENT OF REPUBLIC OF INDONESIA
SEMARANG STEAM POWER PLANT
100 (2X50) MW UNITS 1 & 2

INSTRUMENT LIST
TRANSMITTER EQUIPMENT

PROJECT 6104

SHEET 1TR-2A

P-C1-019-B

ITEM NO.	DESCRIPTION	TRANSMITS TO	TRANSMITTER INFORMATION SIGNAL E	SIGNAL P	RANGE	PRIMARY DEVICE	SYSTEM MAXIMUM PRESS.	TEMP.	VALVES REQ'D	REMARKS	PURCHASE SPEC NUMBER
1LT-1	HP HEATER 1E LEVEL	1CP-27A		X	LATER	DIS-PLACER			NO		K-2A
1LT-2	HP HEATER 1D LEVEL	1CP-27B		X	LATER	DIS-PLACER			NO		K-2A
1LT-3	LP HEATER 1B LEVEL	1CP-27C		X	LATER	DIS-PLACER			NO		K-2A
1LT-4	LP HEATER 1A LEVEL	1CP-27D		X	LATER	DIS-PLACER			NO		K-2A
1LT-5	DEAERATOR 1C LEVEL	1CP-27E		X	LATER	DIS-PLACER			NO		K-2A
1LT-6	HOTWELL LEVEL	1CP-4.1 1CP-24B		X	LATER	DIS-PLACER			NO		K-2A
1LT-7	MAKEUP WATER STORAGE LEVEL	1CP-24C		X	LATER						K-2A
1LT-8	SERVICE WATER STORAGE LEVEL	1CP-24D		X	LATER						K-2A
1LT-9	BOILER DRUM LEVEL	1CP-2.3 CONTROL		X	-15 TO 15"WC				5	PRESSURE COMPENSATE	K-2A
1LT-10	BOILER DRUM LEVEL	1CP-21	X		-12 TO 12"WC					RELIANCE EYE-HYE	K-2A

DATE	REVISION OR ISSUE	NO.	BY

BLACK & VEATCH INTERNATIONAL
CONSULTING ENGINEERS
KANSAS CITY, MO.

PERUSAHAAN UMUM LISTRIK NEGARA
AGENCY OF MINISTRY OF PUBLIC WORKS AND POWER
GOVERNMENT OF REPUBLIC OF INDONESIA
SEMARANG STEAM POWER PLANT
100 (2X50) MW UNITS 1 & 2

INSTRUMENT LIST
TRANSMITTER EQUIPMENT

PROJECT 6104

SHEET 1TR-3

ITEM NO.	DESCRIPTION	TRANSMITS TO	TRANSMITTER INFORMATION SIGNAL E	SIGNAL P	RANGE	PRIMARY DEVICE	SYSTEM MAXIMUM PRESS.	TEMP.	VALVES REQ'D	REMARKS	PURCHASE SPEC NUMBER
1PT-1	SUPERHEATER OUTLET PRESSURE	1CP-22D		X	0 TO 2000 PSIG				2		K-2A
1PT-2	THROTTLE STEAM PRESSURE	1CP-1.3 CONTROL		X	0 TO 2000 PSIG				2		K-2A
1PT-3	DEAERATOR PRESSURE	1CP-27F		X	0 TO 125 PSIG				2		K-2A
1PT-4	FEEDWATER PRESSURE	1CP-22A		X	0 TO 2500 PSIG				2		K-2A
1PT-5	FUEL OIL HEADER PRESSURE	1CP-6.1 1CP-26B		X	0 TO 1500 PSIG				2		K-2A
1PT-6	FUEL OIL BURNER PRESSURE	1CP-26C CONTROL		X	0 TO 1500 PSIG				2		K-2A
1PT-7	BOILER DRUM PRESSURE	1CP-22C		X	0 TO 2500 PSIG				2		K-2A
1PT-8	CONDENSER ABSOLUTE PRESSURE	1CP-4.2		X	0 TO 30" Hg				2		K-2A
1PT-9	ECONOMIZER INLET PRESSURE	1CP-22B		X	0 TO 2500 PSIG				2		K-2A
1PT-10	CONDENSATE PUMP DISCH PRESS	1CP-24A		X	0 TO 300 PSIG				2		K-2A

DATE	REVISION OR ISSUE	NO.	BY

BLACK & VEATCH INTERNATIONAL
CONSULTING ENGINEERS
KANSAS CITY, MO.

PERUSAHAAN UMUM LISTRIK NEGARA
AGENCY OF MINISTRY OF PUBLIC WORKS AND POWER
GOVERNMENT OF REPUBLIC OF INDONESIA
SEMARANG STEAM POWER PLANT
100 (2X50) MW UNITS 1 & 2

INSTRUMENT LIST
TRANSMITTER EQUIPMENT

PROJECT 6104

SHEET 1TR-4

ITEM NO.	DESCRIPTION	TRANSMITS TO	TRANSMITTER INFORMATION				SYSTEM MAXIMUM		VALVES REQ'D	REMARKS	PURCHASE SPEC NUMBER
			SIGNAL		RANGE	PRIMARY DEVICE	PRESS.	TEMP.			
			E	P							
1PT-11	IGNITER OIL PRESSURE	1CP-26A		X	0 TO 150 PSIG				2		K-2A

DATE	REVISION OR ISSUE	NO.	BY

BLACK & VEATCH INTERNATIONAL
CONSULTING ENGINEERS
KANSAS CITY, MO.

PERUSAHAAN UMUM LISTRIK NEGARA
AGENCY OF MINISTRY OF PUBLIC WORKS AND POWER
GOVERNMENT OF REPUBLIC OF INDONESIA
SEMARANG STEAM POWER PLANT
100 (2X50) MW UNITS 1 & 2

INSTRUMENT LIST
TRANSMITTER EQUIPMENT

PROJECT 6104

SHEET 1TR-5

ITEM NO.	DESCRIPTION	TRANSMITS TO	TRANSMITTER INFORMATION SIGNAL E	SIGNAL P	RANGE	PRIMARY DEVICE	SYSTEM MAXIMUM PRESS.	TEMP.	VALVES REQ'D	REMARKS	PURCHASE SPEC NUMBER
1TT-1	STEAM TEMP	1CP-3.1 CONTROL		X	0 TO 650 C	TC TYPE K			NO	PROVIDE TC AND THERMOWELL	K-2A
1TT-2	AIR HEATER AIR IN TEMP	1CP-5.1 CONTROL		X	0 TO 200 C	TC TYPE K			NO	PROVIDE 3 TCs AND 316 SS THERMOWELLS	K-2A
1TT-3	AIR HEATER GAS OUT TEMP	1CP-5.2 CONTROL		X	0 TO 200 C	TC TYPE K			NO	PROVIDE 3 TCs AND 316 SS THERMOWELLS	K-2A
1TT-4	FUEL OIL TEMP	1CP-6.2		X	0 TO 150 C	TC TYPE K			NO	PROVIDE TC AND THERMOWELL	K-2A
1TT-5	DESUPERHEATER OUTLET TEMP	1CP-3.2 CONTROL		X	0 TO 500 C	TC TYPE K			NO	PROVIDE TC	K-2A

DATE	REVISION OR ISSUE	NO.	BY

BLACK & VEATCH INTERNATIONAL
CONSULTING ENGINEERS
KANSAS CITY, MO.

PERUSAHAAN UMUM LISTRIK NEGARA
AGENCY OF MINISTRY OF PUBLIC WORKS AND POWER
GOVERNMENT OF REPUBLIC OF INDONESIA
SEMARANG STEAM POWER PLANT
100 (2X50) MW UNITS 1 & 2

INSTRUMENT LIST
TRANSMITTER EQUIPMENT

PROJECT 6104

SHEET 1TR-6

SERVICE FEEDWATER FLOW

GENERAL	1. ITEM NO./USED WITH ITEM NO.	1PE-1 / 1FT-1	
	2. PRIMARY ELEMENT TYPE	WELD IN NOZZLE	
	3. PRIMARY ELEMENT MATERIAL	316 SS	
	4. DIFFERENTIAL HEAD ("H_2O")		
SERVICE CONDITIONS	5. FLOW MEDIUM	WATER	
	6. FLOW RATE	MAX=	NORMAL=
	7. PRESSURE	STANDARD CONDITIONS	CONDITIONS
	8. BAROMETER		
	9. TEMPERATURE F		
	10. STEAM % MOIST OR GAS % EL. HUMIDITY		
	11. SPECIFIC GRAVITY		
	12. VISCOSITY		
LOCATION	13. PIPE MATERIAL/PIPE SIZE		
	14. PIPE SCHED/WALL THICKNESS		
	15. PIPE ID/PIPE ENDS (PIPE ASSY)		
	16. LENGTH STRAIGHT PIPE INLET/OUTLET		
	17. FLOW DIRECTION		
	18. PRI ELEMENT ABOVE OR BELOW METER	ABOVE	
FLG	19. TYPE/USAS RATING/FACING		
	20. AGA ORIF FLANGE UNION		
NIPPLE	21. EXISTING K_1/K_2	VENA CONTRACTA	
	22. SIZE NIPPLE IN K_1/K_2	1 IN / 1 IN	
	23. TYPE NIPPLE OUTLET	SW	
RES	24. RESERVOIR INLET/OUTLET	1 IN SW / 1 IN SW	
	25. RESERVOIR PRESSURE RATING	2500 LB	

REMARKS & SKETCH

PURCHASE SPEC K-2A

DATE	REVISION OR ISSUE	NO.	BY

BLACK & VEATCH INTERNATIONAL
CONSULTING ENGINEERS
KANSAS CITY, MO.

PERUSAHAAN UMUM LISTRIK NEGARA
AGENCY OF MINISTRY OF PUBLIC WORKS AND POWER
GOVERNMENT OF REPUBLIC OF INDONESIA
GEMARANG STEAM POWER PLANT
100 (2X50) MW UNITS 1 & 2

PRIMARY ELEMENT DATA SHEET

PROJECT 6104

SHEET 1PE-1

SERVICE DESUPERHEATER SPRAY WATER FLOW

GENERAL	1. ITEM NO./USED WITH ITEM NO.	1PE-2 / 1 FT-2	
	2. PRIMARY ELEMENT TYPE	WELD IN NOZZLE PIPE ASSEMBLY	
	3. PRIMARY ELEMENT MATERIAL	316 SS	
	4. DIFFERENTIAL HEAD ("H_2O")		
SERVICE CONDITIONS	5. FLOW MEDIUM	WATER	
	6. FLOW RATE	MAX=	NORMAL=
	7. PRESSURE	STANDARD CONDITIONS	CONDITIONS
	8. BAROMETER		
	9. TEMPERATURE F		
	10. STEAM % MOIST OR GAS % EL. HUMIDITY		
	11. SPECIFIC GRAVITY		
	12. VISCOSITY		
LOCATION	13. PIPE MATERIAL/PIPE SIZE		
	14. PIPE SCHED/WALL THICKNESS		
	15. PIPE ID/PIPE ENDS (PIPE ASSY)		
	16. LENGTH STRAIGHT PIPE INLET/OUTLET		
	17. FLOW DIRECTION		
	18. PRI ELEMENT ABOVE OR BELOW METER	ABOVE	
FLG	19. TYPE/USAS RATING/FACING		
	20. AGA ORIF FLANGE UNION		
NIPPLE	21. EXISTING K_1/K_2	PER MFR	
	22. SIZE NIPPLE IN K_1/K_2	1 IN / 1 IN	
	23. TYPE NIPPLE OUTLET	SW	
RES	24. RESERVOIR INLET/OUTLET	1 IN / 1 IN	
	25. RESERVOIR PRESSURE RATING	2500 LB	

REMARKS & SKETCH

PURCHASE SPEC K-2A

DATE	REVISION OR ISSUE	NO.	BY

BLACK & VEATCH INTERNATIONAL
CONSULTING ENGINEERS
KANSAS CITY, MO.

PERUSAHAAN UMUM LISTRIK NEGARA
AGENCY OF MINISTRY OF PUBLIC WORKS AND POWER
GOVERNMENT OF REPUBLIC OF INDONESIA
SEMARANG STEAM POWER PLANT
100 (2X50) MW UNITS 1 & 2

PRIMARY ELEMENT DATA SHEET

PROJECT 6104

SHEET 1PE-2

SERVICE CONDENSATE FLOW

GENERAL	1. ITEM NO./USED WITH ITEM NO.	1PE-3 / 1FT-3	
	2. PRIMARY ELEMENT TYPE	ORIFICE	
	3. PRIMARY ELEMENT MATERIAL	316 SS	
	4. DIFFERENTIAL HEAD ("H_2O")		
SERVICE CONDITIONS	5. FLOW MEDIUM	CONDENSATE	
	6. FLOW RATE	MAX=	NORMAL=
	7. PRESSURE	STANDARD CONDITIONS	CONDITIONS
	8. BAROMETER		
	9. TEMPERATURE F		
	10. STEAM % MOIST OR GAS % EL. HUMIDITY		
	11. SPECIFIC GRAVITY		
	12. VISCOSITY		
LOCATION	13. PIPE MATERIAL/PIPE SIZE		
	14. PIPE SCHED/WALL THICKNESS		
	15. PIPE ID PIPE ENDS (PIPE ASSY)		
	16. LENGTH STRAIGHT PIPE INLET/OUTLET		
	17. FLOW DIRECTION		
	18. PRI ELEMENT ABOVE OR BELOW METER	ABOVE	
FLG	19. TYPE/USAS RATING/FACING		
	20. AGA ORIF FLANGE UNION	YES	
NIPPLE	21. EXISTING K_1/K_2	1 IN / 1 IN	
	22. SIZE NIPPLE IN K_1/K_2	1/2 IN / 1/2 IN	
	23. TYPE NIPPLE OUTLET	SCREWED	
RES	24. RESERVOIR INLET/OUTLET	NOT REQUIRED	
	25. RESERVOIR PRESSURE RATING	NOT REQUIRED	

REMARKS & SKETCH

PURCHASE SPEC K-2A

DATE	REVISION OR ISSUE	NO.	BY

BLACK & VEATCH INTERNATIONAL
CONSULTING ENGINEERS
KANSAS CITY, MO.

PERUSAHAAN UMUM LISTRIK NEGARA
AGENCY OF MINISTRY OF PUBLIC WORKS AND POWER
GOVERNMENT OF REPUBLIC OF INDONESIA
SEMARANG STEAM POWER PLANT
100 (2X50) MW UNITS 1 & 2

PRIMARY ELEMENT DATA SHEET

PROJECT 6104

SHEET 1PE-3

SERVICE FLASH EVAPORATOR MAKEUP FLOW

GENERAL	1. ITEM NO./USED WITH ITEM NO.	1 PE-8/1 FT-8	
	2. PRIMARY ELEMENT TYPE	WELD IN NOZZLE PIPE ASSEMBLY	
	3. PRIMARY ELEMENT MATERIAL	316 SS	
	4. DIFFERENTIAL HEAD ("H_2O")		
SERVICE CONDITIONS	5. FLOW MEDIUM	WATER	
	6. FLOW RATE	MAX=	NORMAL=
	7. PRESSURE	STANDARD CONDITIONS	CONDITIONS
	8. BAROMETER		
	9. TEMPERATURE F		
	10. STEAM % MOIST OR GAS % EL. HUMIDITY		
	11. SPECIFIC GRAVITY		
	12. VISCOSITY		
LOCATION	13. PIPE MATERIAL/PIPE SIZE		
	14. PIPE SCHED/WALL THICKNESS		
	15. PIPE ID PIPE ENDS (PIPE ASSY)		
	16. LENGTH STRAIGHT PIPE INLET/OUTLET		
	17. FLOW DIRECTION		
	18. PRI ELEMENT ABOVE OR BELOW METER	ABOVE	
FLG	19. TYPE/USAS RATING/FACING		
	20. AGA ORIF FLANGE UNION		
NIPPLE	21. EXISTING K_1/K_2	PER MFR	
	22. SIZE NIPPLE IN K_1/K_2	1 IN/1 IN	
	23. TYPE NIPPLE OUTLET	SW	
RES	24. RESERVOIR INLET/OUTLET	NOT REQUIRED	
	25. RESERVOIR PRESSURE RATING	NOT REQUIRED	

REMARKS & SKETCH

PURCHASE SPEC K-2A

DATE	REVISION OR ISSUE	NO.	BY

BLACK & VEATCH INTERNATIONAL
CONSULTING ENGINEERS
KANSAS CITY, MO.

PERUSAHAAN UMUM LISTRIK NEGARA
AGENCY OF MINISTRY OF PUBLIC WORKS AND POWER
GOVERNMENT OF REPUBLIC OF INDONESIA
SEMARANG STEAM POWER PLANT
100 (2X50) MW UNITS 1 & 2

PRIMARY ELEMENT DATA SHEET

PROJECT 6104

SHEET 1PE-4

SERVICE FLASH EVAPORATOR BLOWDOWN FLOW

GENERAL	1. ITEM NO./USED WITH ITEM NO.	1 PE-9/1 FT-9	
	2. PRIMARY ELEMENT TYPE	WELD IN NOZZLE PIPE ASSEMBLY	
	3. PRIMARY ELEMENT MATERIAL	316 SS	
	4. DIFFERENTIAL HEAD ("H_2O")		
SERVICE CONDITIONS	5. FLOW MEDIUM	BRINE	
	6. FLOW RATE	MAX=	NORMAL=
		STANDARD CONDITIONS	CONDITIONS
	7. PRESSURE		
	8. BAROMETER		
	9. TEMPERATURE F		
	10. STEAM % MOIST OR GAS % EL. HUMIDITY		
	11. SPECIFIC GRAVITY		
	12. VISCOSITY		
LOCATION	13. PIPE MATERIAL/PIPE SIZE		
	14. PIPE SCHED/WALL THICKNESS		
	15. PIPE ID/PIPE ENDS (PIPE ASSY)		
	16. LENGTH STRAIGHT PIPE INLET/OUTLET		
	17. FLOW DIRECTION		
	18. PRI ELEMENT ABOVE OR BELOW METER	ABOVE	
FLG	19. TYPE/USAS RATING/FACING		
	20. AGA ORIF FLANGE UNION		
NIPPLE	21. EXISTING K_1/K_2	PER MFR	
	22. SIZE NIPPLE IN K_1/K_2	1 IN/1 IN	
	23. TYPE NIPPLE OUTLET	SW	
RES	24. RESERVOIR INLET OUTLET	NOT REQUIRED	
	25. RESERVOIR PRESSURE RATING	NOT REQUIRED	

REMARKS & SKETCH

PURCHASE SPEC K-2A

DATE	REVISION OR ISSUE	NO.	BY

BLACK & VEATCH INTERNATIONAL
CONSULTING ENGINEERS
KANSAS CITY, MO.

PERUSAHAAN UMUM LISTRIK NEGARA
AGENCY OF MINISTRY OF PUBLIC WORKS AND POWER
GOVERNMENT OF REPUBLIC OF INDONESIA
SEMARANG STEAM POWER PLANT
100 (2X50) MW UNITS 1 & 2

PRIMARY ELEMENT DATA SHEET

PROJECT 6104

SHEET 1PE-5

SERVICE FLASH EVAPORATOR COOLING WATER FLOW

GENERAL	1. ITEM NO./USED WITH ITEM NO.	1 PE-10/1 FT-10	
	2. PRIMARY ELEMENT TYPE	ANNUBAR	
	3. PRIMARY ELEMENT MATERIAL	MONEL	
	4. DIFFERENTIAL HEAD ("H_2O")		
SERVICE CONDITIONS	5. FLOW MEDIUM	SEA WATER (JAVA SEA)	
	6. FLOW RATE	MAX=	NORMAL=
		STANDARD CONDITIONS	CONDITIONS
	7. PRESSURE		
	8. BAROMETER		
	9. TEMPERATURE F		
	10. STEAM % MOIST OR GAS % EL. HUMIDITY		
	11. SPECIFIC GRAVITY		
	12. VISCOSITY		
LOCATION	13. PIPE MATERIAL/PIPE SIZE		
	14. PIPE SCHED/WALL THICKNESS		
	15. PIPE ID PIPE ENDS (PIPE ASSY)		
	16. LENGTH STRAIGHT PIPE INLET/OUTLET		
	17. FLOW DIRECTION	HORIZONTAL	
	18. PRI ELEMENT ABOVE OR BELOW METER		
FLG	19. TYPE/USAS RATING/FACING	1/2" NPT FORGED STEEL WELD COUPLING	
	20. AGA ORIF FLANGE UNION	-	
NIPPLE	21. EXISTING K_1/K_2	-	
	22. SIZE NIPPLE IN K_1/K_2	1/2" NPTM	
	23. TYPE NIPPLE OUTLET		
RES	24. RESERVOIR INLET/OUTLET	NOT REQUIRED	
	25. RESERVOIR PRESSURE RATING	NOT REQUIRED	

REMARKS & SKETCH

PURCHASE SPEC K-2A

DATE	REVISION OR ISSUE	NO.	BY

BLACK & VEATCH INTERNATIONAL
CONSULTING ENGINEERS
KANSAS CITY, MO.

PERUSAHAAN UMUM LISTRIK NEGARA
AGENCY OF MINISTRY OF PUBLIC WORKS AND POWER
GOVERNMENT OF REPUBLIC OF INDONESIA
SEMARANG STEAM POWER PLANT
100 (2X50) MW UNITS 1 & 2

PRIMARY ELEMENT DATA SHEET

PROJECT 6104

SHEET 1PE-6

SERVICE DESALINATION FEEDWATER FLOW

GENERAL	1. ITEM NO. USED WITH ITEM NO.	1PE-11/ 1 FT-11	
	2. PRIMARY ELEMENT TYPE	ANNUBAR	
	3. PRIMARY ELEMENT MATERIAL	MONEL	
	4. DIFFERENTIAL HEAD "H_2O"		
SERVICE CONDITIONS	5. FLOW MEDIUM	SEA WATER (JAVA SEA)	
	6. FLOW RATE	MAX=	NORMAL=
		STANDARD CONDITIONS	CONDITIONS
	7. PRESSURE		
	8. BAROMETER		
	9. TEMPERATURE F		
	10. STEAM % MOIST OR GAS % EL. HUMIDITY		
	11. SPECIFIC GRAVITY		
	12. VISCOSITY		
LOCATION	13. PIPE MATERIAL PIPE SIZE		
	14. PIPE SCHED/WALL THICKNESS		
	15. PIPE ID PIPE ENDS (PIPE ASSY)		
	16. LENGTH STRAIGHT PIPE INLET/OUTLET		
	17. FLOW DIRECTION	HORIZONTAL	
	18. PRI ELEMENT ABOVE OR BELOW METER		
FLG	19. TYPE/USAS RATING/FACING	1/2" NPT FORGED STEEL WELD COUPLING	
	20. AGA ORIF FLANGE UNION		
NIPPLE	21. EXISTING K_1 K_2		
	22. SIZE NIPPLE IN K_1/K_2	1/2" NPTM	
	23. TYPE NIPPLE OUTLET		
RES	24. RESERVOIR INLET OUTLET	NOT REQUIRED	
	25. RESERVOIR PRESSURE RATING	NOT REQUIRED	

REMARKS & SKETCH

PURCHASE SPEC K-2A

DATE	REVISION OR ISSUE	NO.	BY

BLACK & VEATCH INTERNATIONAL
CONSULTING ENGINEERS
KANSAS CITY, MO.

PERUSAHAAN UMUM LISTRIK NEGARA
AGENCY OF MINISTRY OF PUBLIC WORKS AND POWER
GOVERNMENT OF REPUBLIC OF INDONESIA
SEMARANG STEAM POWER PLANT
100 (2X50) MW UNITS 1 & 2

PRIMARY ELEMENT DATA SHEET

PROJECT 6104

SHEET 1PE-7

PC1-036A

ITEM NO. 2CP-	DESCRIPTION	NAME PLATE	CHART TYPE		RANGE	TRANSMITTER			REMARKS	PURCHASE SPEC NUMBER
			CIRCULAR	STRIP		DIRECT	PNEUMATIC	ELECTRONIC		
1.	BOILER 2 RECORDER	YES		4"						K-2A
	1. FUEL OIL FLOW				0 TO 6000 GPH		2FT-4 2FT-5			
	2. AIR FLOW				0 TO 100%		2FT-7			
	3. THROTTLE PRESSURE				0 TO 2000 PSIG		2PT-2			
2.	BOILER 2 RECORDER	YES		4"						K-2A
	1. FEEDWATER FLOW				0 TO 750,000 LBS/HR		2FT-1			
	2. STEAM FLOW				0 TO 750,000 LBS/HR		2FT-6			
	3. DRUM LEVEL				-15 TO +15 INCHES WC		2LT-9			

DATE	REVISION OR ISSUE	NO.	BY

BLACK & VEATCH INTERNATIONAL
CONSULTING ENGINEERS
KANSAS CITY, MO.

PERUSAHAAN UMUM LISTRIK NEGARA
AGENCY OF MINISTRY OF PUBLIC WORKS AND POWER
GOVERNMENT OF REPUBLIC OF INDONESIA
SEMARANG STEAM POWER PLANT
100 (2X50) MW UNITS 1 & 2

INSTRUMENT LIST
RECORDERS

PROJECT 6104

SHEET 2REC-1

PCI-036A

ITEM NO. 2CP-	DESCRIPTION	NAME PLATE	CHART TYPE		RANGE	TRANSMITTER			REMARKS	PURCHASE SPEC NUMBER
			CIRCULAR	STRIP		DIRECT	PNEUMATIC	ELECTRONIC		
3.	BOILER 2 RECORDER			4"						K-2A
	1. STEAM TEMP				0 TO 650 C		2TT-1			
	DESUPERHEATER 2. OUTLET TEMP				0 TO 500 C		2TT-5			
	DESUPERHEATER 3. SPRAY FLOW				0 TO 75,000 LBS/HR		2FT-2			
4.	TURBINE 2 RECORDER			4"						K-2A
	1. HOTWELL LEVEL				LATER		2LT-6			
	CONDENSER 2. ABSOLUTE PRESS				0 TO 30 IN Hg VAC		2PT-8			
	3. CONDENSATE FLOW				0 TO 500,000 LBS/HR		2FT-3			

DATE	REVISION OR ISSUE	NO.	BY

BLACK & VEATCH INTERNATIONAL
CONSULTING ENGINEERS
KANSAS CITY, MO.

PERUSAHAAN UMUM LISTRIK NEGARA
AGENCY OF MINISTRY OF PUBLIC WORKS AND POWER
GOVERNMENT OF REPUBLIC OF INDONESIA
SEMARANG STEAM POWER PLANT
100 (2X50) MW UNITS 1 & 2

INSTRUMENT LIST
RECORDERS

PROJECT 6104

SHEET 2REC-2

ITEM NO. 2CP-	DESCRIPTION	NAME PLATE	CHART TYPE		RANGE	TRANSMITTER			REMARKS	PURCHASE SPEC NUMBER
			CIRCULAR	STRIP		DIRECT	PNEUMATIC	ELECTRONIC		
5.	AIR HEATER 2 RECORDER	YES		4"						K-2A
	1. AIR IN TEMP				0 TO 200 C		2TT-2			
	2. GAS OUT TEMP				0 TO 200 C		2TT-3			
	3. COLD END AVERAGE TEMP				0 TO 200 C		CONTROL			
6.	BOILER 2 RECORDER	YES		4"						K-2A
	FUEL OIL HEADER 1. PRESSURE				0 TO 1500 PSIG		2PT-5			
	2. FUEL OIL TEMP				0 TO 150 C		2TT-4			
	3. FUEL OIL VICOSITY				0 TO 500 SSU		2AT-1			

DATE	REVISION OR ISSUE	NO.	BY

BLACK & VEATCH INTERNATIONAL
CONSULTING ENGINEERS
KANSAS CITY, MO.

PERUSAHAAN UMUM LISTRIK NEGARA
AGENCY OF MINISTRY OF PUBLIC WORKS AND POWER
GOVERNMENT OF REPUBLIC OF INDONESIA
SEMARANG STEAM POWER PLANT
100 (2X50) MW UNITS 1 & 2

INSTRUMENT LIST
RECORDERS

PROJECT 6104

SHEET 2REC-3

ITEM NO. 2CP-	DESCRIPTION	NAME PLATE	CHART TYPE		RANGE	TRANSMITTER			REMARKS	PURCHASE SPEC NUMBER
			CIRCULAR	STRIP		DIRECT	PNEUMATIC	ELECTRONIC		
7.	BOILER 2 RECORDER	YES		4"						K-2A
	1. OXYGEN				0 TO 10%			2AT-2	LOW ALARM CONTACT	
	2. COMBUSTIBLES				0 TO 10%			2AT-2	HIGH ALARM CONTACT	
8.	TURBINE 2 SUPERVISORY	YES							PROVIDE CUTOUT, MOUNT & WIRE	M-10A
	1. SPEED/VALVE POSITION							BY OWNER		
	2. ECCENTRICITY							BY OWNER		

DATE	REVISION OR ISSUE	NO.	BY

BLACK & VEATCH INTERNATIONAL
CONSULTING ENGINEERS
KANSAS CITY, MO.

PERUSAHAAN UMUM LISTRIK NEGARA
AGENCY OF MINISTRY OF PUBLIC WORKS AND POWER
GOVERNMENT OF REPUBLIC OF INDONESIA
SEMARANG STEAM POWER PLANT
100 (2X50) MW UNITS 1 & 2

INSTRUMENT LIST
RECORDERS

PROJECT 6104

SHEET 2REC-4

PCI 036A

ITEM NO. 2CP-	DESCRIPTION	NAME PLATE	CHART TYPE		RANGE	TRANSMITTER			REMARKS	PURCHASE SPEC NUMBER
			CIRCULAR	STRIP		DIRECT	PNEUMATIC	ELECTRONIC		
9.	TURBINE 2 SUPERVISORY	YES							PROVIDE CUTOUT, MOUNT & WIRE	M-10A
	1. VIBRATION							BY OWNER		
	SHELL AND 2. DIFF EXPANSION							BY OWNER		
10.	TURBINE 2 TEMP RECORDER			6-1/2'					L&N SPEED-O-MAX H	K-2A
	1. LATER				LATER			TC TYPE K	TC BY OWNER	
	2. LATER				LATER			TC TYPE K	TC BY OWNER	
	3. LATER				LATER			TC TYPE K	TC BY OWNER	
	4. LATER				LATER			TC TYPE K	TC BY OWNER	
	5. LATER				LATER			TC TYPE K	TC BY OWNER	

DATE	REVISION OR ISSUE	NO.	BY

BLACK & VEATCH INTERNATIONAL
CONSULTING ENGINEERS
KANSAS CITY, MO.

PERUSAHAAN UMUM LISTRIK NEGARA
AGENCY OF MINISTRY OF PUBLIC WORKS AND POWER
GOVERNMENT OF REPUBLIC OF INDONESIA
SEMARANG STEAM POWER PLANT
100 (2X50) MW UNITS 1 & 2

INSTRUMENT LIST
RECORDERS

PROJECT 6104

SHEET 2REC-5

ITEM NO. 2CP-	DESCRIPTION	NAME PLATE	CHART TYPE		RANGE	TRANSMITTER			REMARKS	PURCHASE SPEC NUMBER
			CIRCULAR	STRIP		DIRECT	PNEUMATIC	ELECTRONIC		
10.CONT.	6. LATER				LATER			TC TYPE K	TC BY OWNER	
	7. LATER				LATER			TC TYPE K	TC BY OWNER	
	8. LATER				LATER			TC TYPE K	TC BY OWNER	
	9. LATER				LATER			TC TYPE K	TC BY OWNER	
	10. LATER				LATER			TC TYPE K	TC BY OWNER	
	11. LATER				LATER			TC TYPE K	TC BY OWNER	
	12. LATER				LATER			TC TYPE K	TC BY OWNER	

DATE	REVISION OR ISSUE	NO.	BY

BLACK & VEATCH INTERNATIONAL
CONSULTING ENGINEERS
KANSAS CITY, MO.

PERUSAHAAN UMUM LISTRIK NEGARA
AGENCY OF MINISTRY OF PUBLIC WORKS AND POWER
GOVERNMENT OF REPUBLIC OF INDONESIA
SEMARANG STEAM POWER PLANT
100 (2X50) MW UNITS 1 & 2

INSTRUMENT LIST
RECORDERS

PROJECT 6104

SHEET 2REC-6

P-C1-036A

ITEM NO. 2CP-	DESCRIPTION	NAME PLATE	CHART TYPE		RANGE	TRANSMITTER			REMARKS	PURCHASE SPEC NUMBER
			CIRCULAR	STRIP		DIRECT	PNEUMATIC	ELECTRONIC		
11.	GENERATOR 2 STATOR WINDING TEMP RECORDER	YES		9-7/8"					L&N SPEED-O-MAX W	K-2A
	1. LATER				LATER			10 OHM RTD	RTD BY OWNER	
	2. LATER				LATER			10 OHM RTD	RTD BY OWNER	
	3. LATER				LATER			10 OHM RTD	RTD BY OWNER	
	4. LATER				LATER			10 OHM RTD	RTD BY OWNER	
	5. LATER				LATER			10 OHM RTD	RTD BY OWNER	
	6. LATER				LATER			10 OHM RTD	RTD BY OWNER	
	7. LATER				LATER			10 OHM RTD	RTD BY OWNER	
	8. LATER				LATER			10 OHM RTD	RTD BY OWNER	
	9. LATER				LATER			10 OHM RTD	RTD BY OWNER	

DATE	REVISION OR ISSUE	NO.	BY

BLACK & VEATCH INTERNATIONAL
CONSULTING ENGINEERS
KANSAS CITY, MO.

PERUSAHAAN UMUM LISTRIK NEGARA
AGENCY OF MINISTRY OF PUBLIC WORKS AND POWER
GOVERNMENT OF REPUBLIC OF INDONESIA
SEMARANG STEAM POWER PLANT
100 (2X50) MW UNITS 1 & 2

INSTRUMENT LIST
RECORDERS

PROJECT 6104

SHEET 2REC-7

P-C1-036A

ITEM NO. 2CP-	DESCRIPTION	NAME PLATE	CHART TYPE		RANGE	TRANSMITTER			REMARKS	PURCHASE SPEC NUMBER
			CIRCULAR	STRIP		DIRECT	PNEUMATIC	ELECTRONIC		
11.CONT.	10. LATER				LATER			10 OHM RTD	RTD BY OWNER	
	11. LATER				LATER			10 OHM RTD	RTD BY OWNER	
	12. LATER				LATER			10 OHM RTD	RTD BY OWNER	
12.	TEMPERATURE MONITOR 2	YES		9-7/8"					L&N SPEED-O-MAX W & PROGRAMMER	K-2A
	BANK 1									
	1. BANK 1 IDENTIFICATION									
	2. LATER				LATER			TC TYPE K		
	3. LATER				LATER			TC TYPE K		
	4. LATER				LATER			TC TYPE K		

DATE	REVISION OR ISSUE	NO.	BY

BLACK & VEATCH INTERNATIONAL
CONSULTING ENGINEERS
KANSAS CITY, MO.

PERUSAHAAN UMUM LISTRIK NEGARA
AGENCY OF MINISTRY OF PUBLIC WORKS AND POWER
GOVERNMENT OF REPUBLIC OF INDONESIA
SEMARANG STEAM POWER PLANT
100 (2X50) MW UNITS 1 & 2

INSTRUMENT LIST
RECORDERS

PROJECT 6104

SHEET 2REC-8

P.C/ C36A

ITEM NO. 2CP-	DESCRIPTION	NAME PLATE	CHART TYPE		RANGE	TRANSMITTER			REMARKS	PURCHASE SPEC NUMBER
			CIRCULAR	STRIP		DIRECT	PNEUMATIC	ELECTRONIC		
12.CONT.	5. LATER				LATER			TC TYPE K		
	6. LATER				LATER			TC TYPE K		
	7. LATER				LATER			TC TYPE K		
	8. LATER				LATER			TC TYPE K		
	9. LATER				LATER			TC TYPE K		
	10. LATER				LATER			TC TYPE K		
	11. LATER				LATER			TC TYPE K		
	12. LATER				LATER			TC TYPE K		
	BANK 2									
	1. LATER				LATER			TC TYPE K		

DATE	REVISION OR ISSUE	NO.	BY

BLACK & VEATCH INTERNATIONAL
CONSULTING ENGINEERS
KANSAS CITY, MO.

PERUSAHAAN UMUM LISTRIK NEGARA
AGENCY OF MINISTRY OF PUBLIC WORKS AND POWER
GOVERNMENT OF REPUBLIC OF INDONESIA
SEMARANG STEAM POWER PLANT
100 (2X50) MW UNITS 1 & 2

INSTRUMENT LIST
RECORDERS

PROJECT 6104

SHEET 2REC-9

PCI-036A

ITEM NO. 2CP-	DESCRIPTION	NAME PLATE	CHART TYPE		RANGE	TRANSMITTER			REMARKS	PURCHASE SPEC NUMBER
			CIRCULAR	STRIP		DIRECT	PNEUMATIC	ELECTRONIC		
12.CONT.	2. BANK 2 IDENTIFICATION									
	3. LATER				LATER			TC TYPE K		
	4. LATER				LATER			TC TYPE K		
	5. LATER				LATER			TC TYPE K		
	6. LATER				LATER			TC TYPE K		
	7. LATER				LATER			TC TYPE K		
	8. LATER				LATER			TC TYPE K		
	9. LATER				LATER			TC TYPE K		
	10. LATER				LATER			TC TYPE K		
	11. LATER				LATER			TC TYPE K		

DATE	REVISION OR ISSUE	NO.	BY

BLACK & VEATCH INTERNATIONAL
CONSULTING ENGINEERS
KANSAS CITY, MO.

PERUSAHAAN UMUM LISTRIK NEGARA
AGENCY OF MINISTRY OF PUBLIC WORKS AND POWER
GOVERNMENT OF REPUBLIC OF INDONESIA
SEMARANG STEAM POWER PLANT
100 (2X50) MW UNITS 1 & 2

INSTRUMENT LIST
RECORDERS

PROJECT 6104

SHEET 2REC-10

P-C1-036A

ITEM NO. 2CP-	DESCRIPTION	NAME PLATE	CHART TYPE		RANGE	TRANSMITTER			REMARKS	PURCHASE SPEC NUMBER
			CIRCULAR	STRIP		DIRECT	PNEUMATIC	ELECTRONIC		
12.CONT	12. LATER				LATER			TC TYPE K		
	BANK 3									
	1. LATER				LATER			TC TYPE K		
	2. LATER				LATER			TC TYPE K		
	3. BANK 3 IDENTIFICATION									
	4. LATER				LATER			TC TYPE K		
	5. LATER				LATER			TC TYPE K		
	6. LATER				LATER			TC TYPE K		
	7. LATER				LATER			TC TYPE K	TC BY OWNER	
	8. LATER				LATER			TC TYPE K	TC BY OWNER	

DATE	REVISION OR ISSUE	NO.	BY

BLACK & VEATCH INTERNATIONAL
CONSULTING ENGINEERS
KANSAS CITY, MO.

PERUSAHAAN UMUM LISTRIK NEGARA
AGENCY OF MINISTRY OF PUBLIC WORKS AND POWER
GOVERNMENT OF REPUBLIC OF INDONESIA
SEMARANG STEAM POWER PLANT
100 (2X50) MW UNITS 1 & 2

INSTRUMENT LIST
RECORDERS

PROJECT 6104

SHEET 2REC-11

PC1-036A

ITEM NO. 2CP-	DESCRIPTION	NAME PLATE	CHART TYPE		RANGE	TRANSMITTER			REMARKS	PURCHASE SPEC NUMBER
			CIRCULAR	STRIP		DIRECT	PNEUMATIC	ELECTRONIC		
12.CONT.	9. LATER				LATER			TC TYPE K	TC BY OWNER	
	10. LATER				LATER			TC TYPE K	TC BY OWNER	
	11. LATER				LATER			TC TYPE K	TC BY OWNER	
	12. LATER				LATER			TC TYPE K	TC BY OWNER	
	BANK 4									
	1. LATER				LATER			TC TYPE K	TC BY OWNER	
	2. LATER				LATER			TC TYPE K	TC BY OWNER	
	3. LATER				LATER			TC TYPE K	TC BY OWNER	
	4. BANK 4 IDENTIFICATION									
	5. LATER				LATER			TC TYPE K	TC BY OWNER	

DATE	REVISION OR ISSUE	NO.	BY

BLACK & VEATCH INTERNATIONAL
CONSULTING ENGINEERS
KANSAS CITY, MO.

PERUSAHAAN UMUM LISTRIK NEGARA
AGENCY OF MINISTRY OF PUBLIC WORKS AND POWER
GOVERNMENT OF REPUBLIC OF INDONESIA
SEMARANG STEAM POWER PLANT
100 (2X50) MW UNITS 1 & 2

INSTRUMENT LIST
RECORDERS

PROJECT 6104

SHEET 2REC-12

ITEM NO. 2CP-	DESCRIPTION	NAME PLATE	CHART TYPE		RANGE	TRANSMITTER			REMARKS	PURCHASE SPEC NUMBER
			CIRCULAR	STRIP		DIRECT	PNEUMATIC	ELECTRONIC		
12.CONT.	6. LATER				LATER			TC TYPE K	TC BY OWNER	
	7. LATER				LATER			TC TYPE K	TC BY OWNER	
	8. LATER				LATER			TC TYPE K	TC BY OWNER	
	9. LATER				LATER			TC TYPE K	TC BY OWNER	
	10. LATER				LATER			TC TYPE K	TC BY OWNER	
	11. LATER				LATER			TC TYPE K	TC BY OWNER	
	12. LATER				LATER			TC TYPE K	TC BY OWNER	
	BANK 5									
	1. LATER				LATER			TC TYPE K	TC BY OWNER	
	2. LATER				LATER			TC TYPE K	TC BY OWNER	

DATE	REVISION OR ISSUE	NO.	BY

BLACK & VEATCH INTERNATIONAL
CONSULTING ENGINEERS
KANSAS CITY, MO.

PERUSAHAAN UMUM LISTRIK NEGARA
AGENCY OF MINISTRY OF PUBLIC WORKS AND POWER
GOVERNMENT OF REPUBLIC OF INDONESIA
SEMARANG STEAM POWER PLANT
100 (2X50) MW UNITS 1 & 2

INSTRUMENT LIST
RECORDERS

PROJECT 6104

SHEET 2REC-13

ITEM NO. 2CP-	DESCRIPTION	NAME PLATE	CHART TYPE		RANGE	TRANSMITTER			REMARKS	PURCHASE SPEC NUMBER
			CIRCULAR	STRIP		DIRECT	PNEUMATIC	ELECTRONIC		
12.CONT.	3. LATER				LATER			TC TYPE K	TC BY OWNER	
	4. LATER				LATER			TC TYPE K	TC BY OWNER	
	5. BANK 5 IDENTIFICATION									
	6. LATER				LATER			TC TYPE K	TC BY OWNER	
	7. LATER				LATER			TC TYPE K	TC BY OWNER	
	8. LATER				LATER			TC TYPE K	TC BY OWNER	
	9. LATER				LATER			TC TYPE K	TC BY OWNER	
	10. LATER				LATER			TC TYPE K	TC BY OWNER	
	11. LATER				LATER			TC TYPE K	TC BY OWNER	
	12. LATER				LATER			TC TYPE K	TC BY OWNER	

DATE	REVISION OR ISSUE	NO.	BY

BLACK & VEATCH INTERNATIONAL
CONSULTING ENGINEERS
KANSAS CITY, MO.

PERUSAHAAN UMUM LISTRIK NEGARA
AGENCY OF MINISTRY OF PUBLIC WORKS AND POWER
GOVERNMENT OF REPUBLIC OF INDONESIA
SEMARANG STEAM POWER PLANT
100 (2X50) MW UNITS 1 & 2

INSTRUMENT LIST
RECORDERS

PROJECT 6104

SHEET 2REC-14

P-C1-C36A

ITEM NO. 2CP-	DESCRIPTION	NAME PLATE	CHART TYPE		RANGE	TRANSMITTER			REMARKS	PURCHASE SPEC NUMBER
			CIRCULAR	STRIP		DIRECT	PNEUMATIC	ELECTRONIC		
12.CONT.	BANK 6									
	1. LATER				LATER			TC TYPE K	TC BY OWNER	
	2. LATER				LATER			TC TYPE K	TC BY OWNER	
	3. LATER				LATER			TC TYPE K	TC BY OWNER	
	4. LATER				LATER			TC TYPE K	TC BY OWNER	
	5. LATER				LATER			TC TYPE K	TC BY OWNER	
	6. BANK 6 IDENTIFICATION									
	7. LATER				LATER			TC TYPE K	TC BY OWNER	
	8. LATER				LATER			TC TYPE K	TC BY OWNER	
	9. LATER				LATER			TC TYPE K	TC BY OWNER	

DATE	REVISION OR ISSUE	NO.	BY

BLACK & VEATCH INTERNATIONAL
CONSULTING ENGINEERS
KANSAS CITY, MO.

PERUSAHAAN UMUM LISTRIK NEGARA
AGENCY OF MINISTRY OF PUBLIC WORKS AND POWER
GOVERNMENT OF REPUBLIC OF INDONESIA
SEMARANG STEAM POWER PLANT
100 (2X50) MW UNITS 1 & 2

INSTRUMENT LIST
RECORDERS

PROJECT 6104

SHEET 2REC-15

ITEM NO. 2CP-	DESCRIPTION	NAME PLATE	CHART TYPE		RANGE	TRANSMITTER			REMARKS	PURCHASE SPEC NUMBER
			CIRCULAR	STRIP		DIRECT	PNEUMATIC	ELECTRONIC		
12.CONT.	10. LATER				LATER			TC TYPE K	TC BY OWNER	
	11. LATER				LATER			TC TYPE K	TC BY OWNER	
	12. LATER				LATER			TC TYPE K	TC BY OWNER	
13.	CONDUCTIVITY RECORDER	YES		6-1/2'					L&N SPEED-O-MAX H	K-2A
	1. CONDENSATE				LATER			2AT-6		
	2. BFP SUCTION				LATER			2AT-7		
	3. STEAM				LATER			2AT-8		

DATE	REVISION OR ISSUE	NO.	BY

BLACK & VEATCH INTERNATIONAL
CONSULTING ENGINEERS
KANSAS CITY, MO.

PERUSAHAAN UMUM LISTRIK NEGARA
AGENCY OF MINISTRY OF PUBLIC WORKS AND POWER
GOVERNMENT OF REPUBLIC OF INDONESIA
SEMARANG STEAM POWER PLANT
100 (2X50) MW UNITS 1 & 2

INSTRUMENT LIST
RECORDERS

PROJECT 6104

SHEET 2REC-16

ITEM NO. 2CP-	DESCRIPTION	NAME PLATE	INPUT SIGNAL RANGE / SCALE RANGE	MANUFACTURER AND TYPE	TRANSMITTER SIGNAL E	TRANSMITTER SIGNAL P	TRANSMITTER TAG NUMBER	REMARKS	PURCHASE SPEC NUMBER
21.	BOILER DRUM LEVEL	YES	-12" TO +12"WC	RELIANCE EYE-HYE	X		2LT-10	MINIATURE 10-LIGHT INDICATOR	K-2A
22.	BOILER SYSTEM	YES							K-2A
	A. FEEDWATER PRESSURE		0 TO 2500 PSIG			X	2PT-4		
	B. ECONOMIZER INLET PRESSURE		0 TO 2500 PSIG			X	2PT-9		
	C. BOILER DRUM PRESSURE		0 TO 2500 PSIG			X	2PT-7		
	D. SUPERHEATER OUTLET PRESSURE		0 TO 2000 PSIG			X	2PT-1		
23.	AIR SYSTEM	YES							K-2A
	A. CONTROL AIR PRESSURE		0 TO 150 PSIG	REPUBLIC V-5		X	DIRECT		

DATE	REVISION OR ISSUE	NO.	BY

BLACK & VEATCH INTERNATIONAL
CONSULTING ENGINEERS
KANSAS CITY, MO.

PERUSAHAAN UMUM LISTRIK NEGARA
AGENCY OF MINISTRY OF PUBLIC WORKS AND POWER
GOVERNMENT OF REPUBLIC OF INDONESIA
SEMARANG STEAM POWER PLANT
100 (2X50) MW UNITS 1 & 2

INSTRUMENT LIST
INDICATORS

PROJECT 6104

SHEET 2IND-1

ITEM NO. 2C.P-	DESCRIPTION	NAME PLATE	INPUT SIGNAL RANGE / SCALE RANGE	MANUFACTURER AND TYPE	TRANSMITTER SIGNAL E	TRANSMITTER SIGNAL P	TRANSMITTER TAG NUMBER	REMARKS	PURCHASE SPEC NUMBER
23.CONT.	B. PLANT AIR PRESSURE		0 TO 150 PSIG	REPUBLIC V-5		X	DIRECT		
24.	CONDENSATE SYSTEM	YES							K-2A
	CONDENSATE PUMP A. DISCH PRESS		0 TO 300 PSIG			X	2PT-10		
	B. HOTWELL LEVEL		LATER			X	2LT-6		
	MAKEUP WATER C. STORAGE LEVEL		LATER			X	2LT-7		
	SERVICE WATER D. STORAGE LEVEL		LATER			X	2LT-8		
25.	GENERATOR HYDROGEN SYSTEM	YES						PROVIDE CUTOUT, MOUNT AND WIRE (OR TUBE)	M-10A
	A. PURITY								

DATE	REVISION OR ISSUE	NO.	BY

BLACK & VEATCH INTERNATIONAL
CONSULTING ENGINEERS
KANSAS CITY, MO.

PERUSAHAAN UMUM LISTRIK NEGARA
AGENCY OF MINISTRY OF PUBLIC WORKS AND POWER
GOVERNMENT OF REPUBLIC OF INDONESIA
SEMARANG STEAM POWER PLANT
100 (2X50) MW UNITS 1 & 2

INSTRUMENT LIST
INDICATORS

PROJECT 6104

SHEET 21ND-2

ITEM NO. 2CP-	DESCRIPTION	NAME PLATE	INPUT SIGNAL RANGE / SCALE RANGE	MANUFACTURER AND TYPE	TRANSMITTER SIGNAL E	TRANSMITTER SIGNAL P	TRANSMITTER TAG NUMBER	REMARKS	PURCHASE SPEC NUMBER
25.CONT.	B. PRESSURE								
26.	FUEL OIL SYSTEM	YES							K-2A
	A. IGNITER OIL PRESSURE		0 TO 150 PSIG			X	2PT-11		
	B. FUEL OIL HEADER PRESS		0 TO 1500 PSIG			X	2PT-5		
	C. FUEL OIL BURNER PRESS		0 TO 1500 PSIG			X	2PT-6		
27.	HEATER SYSTEM	YES							K-2A
	A. LP HEATER 2A LEVEL		LATER			X	2LT-4		
	B LP HEATER 2B LEVEL		LATER			X	2LT-3		

DATE	REVISION OR ISSUE	NO.	BY

BLACK & VEATCH INTERNATIONAL
CONSULTING ENGINEERS
KANSAS CITY, MO.

PERUSAHAAN UMUM LISTRIK NEGARA
AGENCY OF MINISTRY OF PUBLIC WORKS AND POWER
GOVERNMENT OF REPUBLIC OF INDONESIA
SEMARANG STEAM POWER PLANT
100 (2X50) MW UNITS 1 & 2

INSTRUMENT LIST
INDICATORS

PROJECT 6104

SHEET 2IND-3

ITEM NO. 2CP-	DESCRIPTION	NAME PLATE	INPUT SIGNAL RANGE / SCALE RANGE	MANUFACTURER AND TYPE	TRANSMITTER SIGNAL E	TRANSMITTER SIGNAL P	TRANSMITTER TAG NUMBER	REMARKS	PURCHASE SPEC NUMBER
27. CONT.	C. HP HEATER 2D LEVEL		LATER			X	2LT-2		
	D. HP HEATER 2E LEVEL		LATER			X	2LT-1		
	E. DEAERATOR 2C LEVEL		LATER				2LT-5		
	F. DEAERATOR PRESSURE		0 TO 125 PSIG				2PT-3		
28.	BOILER DRAFT	YES							K-2A
	A. FD FAN DISCH PRESS		0 TO 25"WC	REPUBLIC V-5		X	DIRECT	FURNISH PURGE ROTAMETER AND 4-WAY BACK-BLOWDOWN VALVE	
	B. WINDBOX PRESSURE		0 TO 20"WC	REPUBLIC V-5		X	DIRECT	FURNISH PURGE ROTAMETER AND 4-WAY BACK-BLOWDOWN VALVE	
	C. FURNACE PRESSURE		0 TO 15"WC	REPUBLIC V-5		X	DIRECT	FURNISH PURGE ROTAMETER AND 4-WAY BACK-BLOWDOWN VALVE	
	AIR HEATER D. GAS IN PRESS		0 TO 10"WC	REPUBLIC V-5		X	DIRECT	FURNISH PURGE ROTAMETER AND 4-WAY BACK-BLOWDOWN VALVE	

DATE	REVISION OR ISSUE	NO.	BY

BLACK & VEATCH INTERNATIONAL
CONSULTING ENGINEERS
KANSAS CITY, MO.

PERUSAHAAN UMUM LISTRIK NEGARA
AGENCY OF MINISTRY OF PUBLIC WORKS AND POWER
GOVERNMENT OF REPUBLIC OF INDONESIA
SEMARANG STEAM POWER PLANT
100 (2X50) MW UNITS 1 & 2

INSTRUMENT LIST
INDICATORS

PROJECT 6104

SHEET 2 INDI-4

ITEM NO. 2CP-	DESCRIPTION	NAME PLATE	INPUT SIGNAL RANGE / SCALE RANGE	MANUFACTURER AND TYPE	TRANSMITTER SIGNAL E	TRANSMITTER SIGNAL P	TRANSMITTER TAG NUMBER	REMARKS	PURCHASE SPEC NUMBER
28.CONT.	AIR HEATER E. GAS OUT PRESS		-2 TO +2"WC	REPUBLIC V-5		X	DIRECT	FURNISH PURGE ROTAMETER AND 4-WAY BACK-BLOWDOWN VALVE	
	WINDBOX-FURNACE F. DIFF PRESS		0 TO 10"WC	REPUBLIC V-5		X	DIRECT	FURNISH PURGE ROTAMETER AND 4-WAY BACK-BLOWDOWN VALVE	
29.	FUEL OIL FLOW INTEGRATOR	YES	X10	FOXBORO 14A		X	CONTROL	FURNISH BRAKE ASSEMBLY	K-2A
30.	FEEDWATER WATER INTEGRATOR	YES	X1000	FOXBORO 14A		X	CONTROL	FURNISH BRAKE ASSEMBLY	K-2A
31.	DESUPERHEATER SPRAY FLOW INTEGRATOR	YES	X100	FOXBORO 14A		X	CONTROL	FURNISH BRAKE ASSEMBLY	K-2A
32.	BAROMETER	YES	0 TO 35"Hg	MERIAM 31EG10FF		X	DIRECT		K-2A

DATE	REVISION OR ISSUE	NO.	BY

BLACK & VEATCH INTERNATIONAL
CONSULTING ENGINEERS
KANSAS CITY, MO.

PERUSAHAAN UMUM LISTRIK NEGARA
AGENCY OF MINISTRY OF PUBLIC WORKS AND POWER
GOVERNMENT OF REPUBLIC OF INDONESIA
SEMARANG STEAM POWER PLANT
100 (2X50) MW
UNITS 1 & 2

INSTRUMENT LIST
INDICATORS

PROJECT 6104

SHEET 2IND-5

ITEM NO. 2CP-	DESCRIPTION	NAME PLATE	INPUT SIGNAL RANGE / SCALE RANGE	MANUFACTURER AND TYPE	TRANSMITTER SIGNAL E	TRANSMITTER SIGNAL P	TRANSMITTER TAG NUMBER	REMARKS	PURCHASE SPEC NUMBER
33.	CONDENSER VACUUM	YES	0 TO 35"Hg	MERIAM 30EG25FF		X	DIRECT		K-2A

DATE	REVISION OR ISSUE	NO.	BY

BLACK & VEATCH INTERNATIONAL
CONSULTING ENGINEERS
KANSAS CITY, MO.

PERUSAHAAN UMUM LISTRIK NEGARA
AGENCY OF MINISTRY OF PUBLIC WORKS AND POWER
GOVERNMENT OF REPUBLIC OF INDONESIA
SEMARANG STEAM POWER PLANT
100 (2X50) MW UNITS 1 & 2

INSTRUMENT LIST
INDICATORS

PROJECT 6104

SHEET 21NI-6

ITEM NO. 2CP-	DESCRIPTION	NAME PLATE	MANUFACTURER TYPE MODEL	INPUT SIGNAL RANGE / SCALE RANGE	SIGNAL CONVERTER TAG NO.	REMARKS	PURCHASE SPEC NUMBER
41	BFP 2A AMPS	YES		LATER			K-2A
42	BFP 2B AMPS	YES		LATER			K-2A
43	FD FAN 2 AMPS	YES		LATER			K-2A
44	AIR HEATER 2 AMPS	YES		LATER			K-2A
45	NOT USED						
46	NOT USED						
47	NOT USED						
48	GENERATOR PHASE A AMPS	YES		LATER			K-2A
49	GENERATOR PHASE B AMPS	YES		LATER			K-2A
50	GENERATOR PHASE C AMPS	YES		LATER			K-2A

DATE	REVISION OR ISSUE	NO.	BY

BLACK & VEATCH INTERNATIONAL
CONSULTING ENGINEERS
KANSAS CITY, MO.

PERUSAHAAN UMUM LISTRIK NEGARA
AGENCY OF MINISTRY OF PUBLIC WORKS AND POWER
GOVERNMENT OF REPUBLIC OF INDONESIA
SEMARANG STEAM POWER PLANT
100 (2X50) MW UNITS 1 & 2

INSTRUMENT LIST
ELECTRIC METERS

PROJECT 6104

SHEET 2EM-1

ITEM NO.	DESCRIPTION	NAME PLATE	MANUFACTURER TYPE MODEL	INPUT SIGNAL RANGE / SCALE RANGE	SIGNAL CONVERTER TAG NO.	REMARKS	PURCHASE SPEC NUMBER
51	GENERATOR FIELD AMPS	YES				PROVIDE CUTOUT, MOUNT AND WIRE	
52	GENERATOR FIELD VOLTS	YES				PROVIDE CUTOUT, MOUNT AND WIRE	
53	TRANSFER VOLTMETER	YES				PROVIDE CUTOUT, MOUNT AND WIRE	
54	GENERATOR VOLTS	YES		LATER			K-2A
55	NOT USED						
56	GENERATOR TACHOMETER	YES		LATER		PROVIDE CUTOUT, MOUNT AND WIRE	M-10A
57	GENERATOR FREQUENCY	YES		LATER			K-2A
58	GENERATOR VARS	YES		LATER			K-2A
59	GENERATOR WATTS	YES		LATER		PROVIDE CUTOUT, MOUNT AND WIRE	M-10A
60	GENERATOR WATTHOURS	YES		LATER			K-2A

DATE	REVISION OR ISSUE	NO.	BY

BLACK & VEATCH INTERNATIONAL
CONSULTING ENGINEERS
KANSAS CITY, MO.

PERUSAHAAN UMUM LISTRIK NEGARA
AGENCY OF MINISTRY OF PUBLIC WORKS AND POWER
GOVERNMENT OF REPUBLIC OF INDONESIA
SEMARANG STEAM POWER PLANT
100 (2X50) MW UNITS 1 & 2

INSTRUMENT LIST
ELECTRIC METERS

PROJECT 6104

SHEET 2 OF 2

BEST AVAILABLE COPY

ITEM NO.	DESCRIPTION	NAME PLATE	MANUFACTURER TYPE MODEL	INPUT SIGNAL RANGE / SCALE RANGE	SIGNAL CONVERTER TAG NO	REMARKS	PURCHASE SPEC NUMBER
61	4160 VOLT SWGR AMPS	YES		LATER			K-2A
62	4160 VOLT SWGR VOLTS	YES		LATER			K-2A
63	4160 VOLT SWGR WATTHOURS	YES		LATER			K-2A
64	RESERVE AUXILIARY TRANSFORMER AMPS	YES		LATER			K-2A
65	MAIN AUXILIARY TRANSFORMER AMPS	YES		LATER			K-2A
66	SUS FEEDER 1 AMPS	YES		LATER			K-2A
67	SUS FEEDER 2 AMPS	YES		LATER			K-2A
68	NOT USED						
69	FUEL OIL SUS FEEDER AMPS	YES		LATER		BEST AVAILABLE COPY	K-2A
70	TIE AMPS	YES		LATER			K-2A

DATE	REVISION OR ISSUE	NO.	BY

BLACK & VEATCH INTERNATIONAL
CONSULTING ENGINEERS
KANSAS CITY, MO.

PERUSAHAAN UMUM LISTRIK NEGARA
AGENCY OF MINISTRY OF PUBLIC WORKS AND POWER
GOVERNMENT OF REPUBLIC OF INDONESIA
SEMARANG STEAM POWER PLANT
100 (2X50) MW UNITS 1 & 2

INSTRUMENT LIST
ELECTRIC METERS

PROJECT 6104

SHEET 2EM-3

ITEM NO. 2CP-	DESCRIPTION	NAME PLATE	MANUFACTURER TYPE MODEL	INPUT SIGNAL RANGE / SCALE RANGE	SIGNAL CONVERTER TAG NO.	REMARKS	PURCHASE SPEC NUMBER
71	NOT USED						
72	NOT USED						
73	CONDENSATE PUMP 2A	YES		LATER			K-2A
74	CONDENSATE PUMP 2B	YES		LATER			K-2A
75	4160 VOLT SWGR WATTS (MAIN)	YES		LATER			K-2A
76	4160 VOLT SWGR WATTS (RES)	YES		LATER			K-2A
77	4160 VOLT SWGR WATTHOURS (MAIN)	YES		LATER			K-2A

DATE	REVISION OR ISSUE	NO.	BY
11/12/73	ADDENDUM 1	1	JMU

BLACK & VEATCH INTERNATIONAL
CONSULTING ENGINEERS
KANSAS CITY, MO.

PERUSAHAAN UMUM LISTRIK NEGARA
AGENCY OF MINISTRY OF PUBLIC WORKS AND POWER
GOVERNMENT OF REPUBLIC OF INDONESIA
SEMARANG STEAM POWER PLANT
100 (2X50) MW UNITS 1 & 2

INSTRUMENT LIST
ELECTRIC METERS

PROJECT 6104

SHEET 2EM-4

ITEM NO. 2CP-	DESCRIPTION	FUNCTION			SIGNAL		AUXILIARY FUNCTION	INDICATOR DATA		REMARKS	PURCHASE SPEC NUMBER
		H/A	H	T	E	P		INPUT SIGNAL	SCALE RANGE		
81	FEEDWATER VALVE 2A	X				X	DRUM LEVEL SET POINT				K-2A
82	FEEDWATER VALVE 2B	X				X	BIAS				K-2A
83	FUEL OIL VALVE 2A	X				X					K-2A
84	FUEL OIL VALVE 2B	X				X	BIAS				K-2A
85	FD FAN INLET VANES	X				X					K-2A
86	FD FAN DISCHARGE DAMPER	X				X					K-2A
87	AIR PREHEAT TEMP	X				X	TEMP SET POINT				K-2A
88	FUEL AIR RATIO		X			X					K-2A
89	STEAM TEMP	X				X	TEMP SET POINT				K-2A
90	CONDENSATE VALVE	X				X	DEAERATOR LEVEL SET POINT			PROVIDE OUTPUT FOR OWNER'S HYDRAZINE CONTROL SYSTEM	K-2A

DATE	REVISION OR ISSUE	NO.	BY

BLACK & VEATCH INTERNATIONAL
CONSULTING ENGINEERS
KANSAS CITY, MO.

PERUSAHAAN UMUM LISTRIK NEGARA
AGENCY OF MINISTRY OF PUBLIC WORKS AND POWER
GOVERNMENT OF REPUBLIC OF INDONESIA
SEMARANG STEAM POWER PLANT
100 (2X50) MW UNITS 1 & 2

INSTRUMENT LIST
PANEL STATIONS

PROJECT 6104

SHEET 2PNL-1

ITEM NO. 2CP-	DESCRIPTION	FUNCTION			SIGNAL		AUXILIARY FUNCTION	INDICATOR DATA		REMARKS	PURCHASE SPEC NUMBER
		H/A	H	T	E	P		INPUT SIGNAL	SCALE RANGE		
91	NOT USED										
92	BOILER MASTER	X				X	PRESS SET POINT				K-2A

DATE	REVISION OR ISSUE	NO.	BY

BLACK & VEATCH INTERNATIONAL
CONSULTING ENGINEERS
KANSAS CITY, MO.

PERUSAHAAN UMUM LISTRIK NEGARA
AGENCY OF MINISTRY OF PUBLIC WORKS AND POWER
GOVERNMENT OF REPUBLIC OF INDONESIA
SEMARANG STEAM POWER PLANT
100 (2X50) MW UNITS 1 & 2

INSTRUMENT LIST
PANEL STATIONS

PROJECT 6104

SHEET

ITEM NO. 2CP-	DESCRIPTION	NAME PLATE	SWITCH MANUFACTURER MODEL TYPE	LIGHTS MANUFACTURER MODEL TYPE	COLOR RED	WHITE	GREEN	BLUE	AMBER		VOLTAGE	REMARKS	PURCHASE SPEC NUMBER
101	BOILER FEED PUMP 2A	YES	GE SB-1	HONEYWELL PTW	1	1	1						K-2A
102	BFP 2A LUBE OIL PUMP	YES		HONEYWELL PTW	1		1						K-2A
103	MAIN STEAM LINE MOV-201	YES	GE SB-1	HONEYWELL PTW	1		1						K-2A
104	BOILER FEED PUMP 2B	YES	GE SB-1	HONEYWELL PTW	1	1	1						K-2A
105	BFP 2B LUBE OIL PUMP	YES		HONEYWELL PTW	1		1						K-2A
106	NOT USED												
107	FD FAN 2	YES	GE SB-1	HONEYWELL PTW	1	1	1						K-2A
108	AIR HEATER 2	YES	GE SB-1	HONEYWELL PTW	1	1	1						K-2A
109	AIR HEATER 2 LUBE OIL PUMP	YES		HONEYWELL PTW	1		1						K-2A
110	AIR HEATER 2 AIR MOTOR	YES	MICROSWITCH PT	HONEYWELL PTW	1		1					SELECTOR SWITCH	K-2A

DATE	REVISION OR ISSUE	NO.	BY

BLACK & VEATCH INTERNATIONAL
CONSULTING ENGINEERS
KANSAS CITY, MO.

PERUSAHAAN UMUM LISTRIK NEGARA
AGENCY OF MINISTRY OF PUBLIC WORKS AND POWER
GOVERNMENT OF REPUBLIC OF INDONESIA
SEMARANG STEAM POWER PLANT
100 (2X50) MW
UNITS 1 & 2

INSTRUMENT LIST
SWITCHES AND LIGHTS

PROJECT 6104

SHEET 2SW-1

ITEM NO. 2CF-	DESCRIPTION	NAME PLATE	SWITCH MANUFACTURER MODEL TYPE	LIGHTS MANUFACTURER MODEL TYPE	COLOR RED	WHITE	GREEN	BLUE	AMBER		VOLTAGE	REMARKS	PURCHASE SPEC NUMBER
111	LIGHT OIL SUPPLY PUMP 2	YES	GE SB-1	HONEYWELL PTW	1	1	1						K-2A
112	FUEL OIL PUMP 2A	YES	GE SB-1	HONEYWELL PTW	1	1	1						K-2A
113	FUEL OIL PUMP 2B	YES	GE SB-1	HONEYWELL PTW	1	1	1						K-2A
114	FLAME DETECTOR AIR BLOWER 2A	YES	GE SB-1	HONEYWELL PTW	1	1	1						K-2A
115	FLAME DETECTOR AIR BLOWER 2B	YES	GE SB-1	HONEYWELL PTW	1	1	1						K-2A
116	CONDENSATE PUMP 2A	YES	GE SB-1	HONEYWELL PTW	1	1	1						K-2A
117	CONDENSATE PUMP 2B	YES	GE SB-1	HONEYWELL PTW	1	1	1						K-2A
118	AUXILIARY COOLING WATER PUMP 2A	YES	GE SB-1	HONEYWELL PTW	1	1	1						K-2A
119	AUXILIARY COOLING WATER PUMP 2B	YES	GE SB-1	HONEYWELL PTW	1	1	1						K-2A
120	TURBINE AUXILIARY OIL PUMP 2	YES	GE SB-1	HONEYWELL PTW	1	1	1						K-2A

DATE	REVISION OR ISSUE	NO.	BY

BLACK & VEATCH INTERNATIONAL
CONSULTING ENGINEERS
KANSAS CITY, MO.

PERUSAHAAN UMUM LISTRIK NEGARA
AGENCY OF MINISTRY OF PUBLIC WORKS AND POWER
GOVERNMENT OF REPUBLIC OF INDONESIA
SEMARANG STEAM POWER PLANT
100 (2X50) MW UNITS 1 & 2

INSTRUMENT LIST
SWITCHES AND LIGHTS

PROJECT 6104

SHEET 2SW-2

ITEM NO. 2CP-	DESCRIPTION	NAME PLATE	SWITCH MANUFACTURER MODEL TYPE	LIGHTS MANUFACTURER MODEL TYPE	COLOR RED	WHITE	GREEN	BLUE	AMBER		VOLTAGE	REMARKS	PURCHASE SPEC NUMBER
121	AC TURBINE BEARING AND SEAL OIL PUMP 2	YES	GE SB-1	HONEYWELL PTW	1	1	1						K-2A
122	DC TURBINE BEARING AND SEAL OIL PUMP 2	YES	GE SB-1	HONEYWELL PTW	1	1	1						K-2A
123	TURNING GEAR 2	YES	GE SB-1	HONEYWELL PTW	1	1	1						K-2A
124	TURNING GEAR 2 CLUTCH	YES		HONEYWELL PTW	1		1						K-2A
125	GLAND EXHAUSTER 2	YES	GE SB-1	HONEYWELL PTW	1	1	1						K-2A
126	LUBE OIL RESERVOIR EXHAUSTER 2	YES	GE SB-1	HONEYWELL PTW	1	1	1						K-2A
127	BEARING DRAIN ENLARGEMENT BLOWER 2	YES	GE SB-1	HONEYWELL PTW	1	1	1						K-2A
128	LUBE OIL CONDITIONER 2	YES	GE SB-1	HONEYWELL PTW	1	1	1						K-2A
129	TURBINE GOVERNOR CONTROL 2	YES	GE SB-1	HONEYWELL PTW	1	1	1					PROVIDE CUTOUT, MOUNT AND WIRE	M-10A
130	ELECTROMATIC RELIEF VALVE	YES	GE SB-1	HONEYWELL PTW	1		1	1					K-2A

DATE	REVISION OR ISSUE	NO.	BY

BLACK & VEATCH INTERNATIONAL
CONSULTING ENGINEERS
KANSAS CITY, MO.

PERUSAHAAN UMUM LISTRIK NEGARA
AGENCY OF MINISTRY OF PUBLIC WORKS AND POWER
GOVERNMENT OF REPUBLIC OF INDONESIA
SEMARANG STEAM POWER PLANT
100 (2X50) MW UNITS 1 & 2

INSTRUMENT LIST
SWITCHES AND LIGHTS

PROJECT 6104

SHEET 2SW-1

ITEM NO. 2CP-	DESCRIPTION	NAME PLATE	SWITCH MANUFACTURER MODEL TYPE	LIGHTS MANUFACTURER MODEL TYPE	COLOR RED	WHITE	GREEN	BLUE	AMBER		VOLTAGE	REMARKS	PURCHASE SPEC NUMBER
131	TURBINE 2 STOP VALVE TEST	YES	PUSHBUTTON	HONEYWELL PTW	1	1	1					PROVIDE CUTOUT, MOUNT AND WIRE, FURNISH INDICATING LIGHTS	M-10A
132	TURBINE 2 TRIP SOLENOID RESET	YES	PUSHBUTTON	HONEYWELL PTW	1		1					PROVIDE CUTOUT, MOUNT AND WIRE, FURNISH INDICATING LIGHTS	M-10A
133	TURBINE 2 OIL PUMP NOT IN AUTO	YES		HONEYWELL PTW				3					K-2A
134	AIR PREHEATING COIL PUMP 2A	YES	GE SB-1	HONEYWELL PTW	1	1	1						K-2A
135	AIR PREHEATING COIL PUMP 2B	YES	GE SB-1	HONEYWELL PTW	1	1	1						K-2A
136	CIRCULATING WATER PUMP 1	YES		HONEYWELL PTW	1	1	1						K-2A
137	CIRCULATING WATER PUMP 1 DISCH VALVE	YES		HONEYWELL PTW	1		1						K-2A
138	CIRCULATING WATER PUMP 2	YES		HONEYWELL PTW	1	1	1						K-2A
139	CIRCULATING WATER PUMP 2 DISCH VALVE	YES		HONEYWELL PTW	1		1						K-2A
140	CIRCULATING WATER PUMP 3	YES		HONEYWELL PTW	1	1	1						K-2A

DATE	REVISION OR ISSUE	NO.	BY

BLACK & VEATCH INTERNATIONAL
CONSULTING ENGINEERS
KANSAS CITY, MO.

PERUSAHAAN UMUM LISTRIK NEGARA
AGENCY OF MINISTRY OF PUBLIC WORKS AND POWER
GOVERNMENT OF REPUBLIC OF INDONESIA
SEMARANG STEAM POWER PLANT
100 (2X50) MW UNITS 1 & 2

INSTRUMENT LIST
SWITCHES AND LIGHTS

PROJECT 6104

SHEET 2SW-4

ITEM NO. 2CP-	DESCRIPTION	NAME PLATE	SWITCH MANUFACTURER MODEL TYPE	LIGHTS MANUFACTURER MODEL TYPE	COLOR RED	WHITE	GREEN	BLUE	AMBER		VOLTAGE	REMARKS	PURCHASE SPEC NUMBER
141	CIRCULATING WATER PUMP 3 DISCH VALVE	YES		HONEYWELL PTW	1		1						K-2A
142	FIRE PUMP 1	YES		HONEYWELL PTW	1	1	1						K-2A
143	GENERATOR VOLTS	YES	GE SB-1									TRANSFER SWITCH FOR 2CP-54	K-2A
144	4160 V SWGR BUS VOLTS	YES	GE SB-1									TRANSFER SWITCH FOR 2CP-62	K-2A
145	ANNUNCIATOR ACKNOWLEDGE	YES	PUSHBUTTON										K-2A
146	ANNUNCIATOR RESET	YES	PUSHBUTTON										K-2A
147	ANNUNCIATOR TEST	YES	PUSHBUTTON										K-2A
148	ANNUNCIATOR FIRST-OUT RESET	YES	PUSHBUTTON									GUARDED	K-2A
149	OCB NO. 6 SYNCH	YES	GE SB-1										K-2A
150	OCB NO. 6	YES	GE SB-1	HONEYWELL PTW	1	1	1						K-2A

DATE	REVISION OR ISSUE	NO.	BY

BLACK & VEATCH INTERNATIONAL
CONSULTING ENGINEERS
KANSAS CITY, MO.

PERUSAHAAN UMUM LISTRIK NEGARA
AGENCY OF MINISTRY OF PUBLIC WORKS AND POWER
GOVERNMENT OF REPUBLIC OF INDONESIA
SEMARANG STEAM POWER PLANT
100 (2X50) MW UNITS 1 & 2

INSTRUMENT LIST
SWITCHES AND LIGHTS

PROJECT 6104

SHEET 2SW-5

ITEM NO.	DESCRIPTION	NAME PLATE	SWITCH MANUFACTURER MODEL TYPE	LIGHTS MANUFACTURER MODEL TYPE	COLOR RED	WHITE	GREEN	BLUE	AMBER		VOLTAGE	REMARKS	PURCHASE SPEC NUMBER
151	4160 V SWGR RESERVE BREAKER	YES	GE SB-1	HONEYWELL PTW	1	1	1						K-2A
152	4160 V SWGR MAIN BREAKER	YES	GE SB-1	HONEYWELL PTW	1	1	1						K-2A
153	SUS MAIN TRANSFORMER	YES	GE SB-1	HONEYWELL PTW	1	1	1						K-2A
154	SUS 1 AND 2 RESERVE TRANSFORMER	YES	GE SB-1	HONEYWELL PTW	1	1	1						K-2A
155	NOT USED												
156	FUEL OIL STORAGE SUS TRANSFORMER	YES	GE SB-1	HONEYWELL PTW	1	1	1						K-2A
157	4160 V SWGR TIE BREAKER	YES	GE SB-1	HONEYWELL PTW	1	1	1						K-2A
158	OCB NO. 5 SYNCH	YES	GE SB-1										K-2A
159	OCB NO. 5	YES	GE SB-1	HONEYWELL PTW	1	1	1						K-2A
160	TO OCB NO. 4	YES										FURNISH NAMEPLATE ONLY	K-2A

DATE	REVISION OR ISSUE	NO.	BY

BLACK & VEATCH INTERNATIONAL
CONSULTING ENGINEERS
KANSAS CITY, MO.

PERUSAHAAN UMUM LISTRIK NEGARA
AGENCY OF MINISTRY OF PUBLIC WORKS AND POWER
GOVERNMENT OF REPUBLIC OF INDONESIA
SEMARANG STEAM POWER PLANT
100 (2X50) MW UNITS 1 & 2

INSTRUMENT LIST
SWITCHES AND LIGHTS

PROJECT 6104

SHEET 2SW-6

ITEM NO. 2CP-	DESCRIPTION	NAME PLATE	SWITCH	LIGHTS								REMARKS	PURCHASE SPEC NUMBER
			MANUFACTURER MODEL TYPE	MANUFACTURER MODEL TYPE	COLOR						VOLTAGE		
					RED	WHITE	GREEN	BLUE	AMBER				
161	4160 V SWGR RESERVE BREAKER SYNCH	YES	GE SB-1										K-2A
162	4160 V SWGR MAIN BREAKER SYNCH	YES	GE SB-1										K-2A
163	SUS MAIN BREAKER	YES	GE SB-1	HONEYWELL PTW	1	1	1						K-2A
164	SUS RESERVE BREAKER	YES	GE SB-1	HONEYWELL PTW	1	1	1						K-2A
165	(NAMEPLATE ENGRAVING LATER)	YES										FURNISH NAMEPLATE ONLY	K-2A
166	NOT USED												
167	TO 4160 V SWGR UNIT 1	YES										FURNISH NAMEPLATE ONLY	K-2A
168	NOT USED												
169	GENERATOR FIELD BREAKER	YES										PROVIDE CUTOUT, MOUNT AND WIRE	
170	VOLTAGE REGULATOR TRANSFER	YES										PROVIDE CUTOUT, MOUNT AND WIRE	

DATE	REVISION OR ISSUE	NO.	BY

BLACK & VEATCH INTERNATIONAL
CONSULTING ENGINEERS
KANSAS CITY, MO.

PERUSAHAAN UMUM LISTRIK NEGARA
AGENCY OF MINISTRY OF PUBLIC WORKS AND POWER
GOVERNMENT OF REPUBLIC OF INDONESIA
SEMARANG STEAM POWER PLANT
100 (2X50) MW UNITS 1 & 2

INSTRUMENT LIST
SWITCHES AND LIGHTS

PROJECT 6104

SHEET 2SW-7

ITEM NO.	DESCRIPTION	NAME PLATE	SWITCH MANUFACTURER MODEL TYPE	LIGHTS MANUFACTURER MODEL TYPE	COLOR RED	WHITE	GREEN	BLUE	AMBER	VOLTAGE	REMARKS	PURCHASE SPEC NUMBER
171	GENERATOR FIELD AUTO REGULATOR	YES									PROVIDE CUTOUT, MOUNT AND WIRE	
172	GENERATOR FIELD	YES									PROVIDE CUTOUT, MOUNT AND WIRE	
173	TRANSFORMERS PARALLELED	YES		HONEYWELL PTW				2				K-2A
174	DESUPERHEAT SPRAY SUPPLY VALVE	YES	GE SB-1	HONEYWELL PTW	1		1					K-2A
175	DESUPERHEAT SPRAY STOP VALVE	YES	GE SB-1	HONEYWELL PTW	1		1					K-2A
176	DESUPERHEAT SPRAY STOP VALVE	YES	GE SB-1	HONEYWELL PTW	1		1					K-2A
177	ANNUNCIATOR ACKNOWLEDGE	YES	PUSH-BUTTON									K-2A
178	ANNUNCIATOR RESET	YES	PUSH-BUTTON									K-2A
179	ANNUNCIATOR TEST	YES	PUSH-BUTTON									K-2A
180	MAKEUP WATER TRANSFER PUMP 1	YES		HONEYWELL PTW	1	1	1					K-2A

DATE	REVISION OR ISSUE	NO.	BY

BLACK & VEATCH INTERNATIONAL
CONSULTING ENGINEERS
KANSAS CITY, MO.

PERUSAHAAN UMUM LISTRIK NEGARA
AGENCY OF MINISTRY OF PUBLIC WORKS AND POWER
GOVERNMENT OF REPUBLIC OF INDONESIA
SEMARANG STEAM POWER PLANT
100 (2X50) MW UNITS 1 & 2

INSTRUMENT LIST
SWITCHES AND LIGHTS

PROJECT 6104

SHEET 2SW-8

ITEM NO. 2CP-	DESCRIPTION	TYPE	OVERALL SIZE WIDTH X HEIGHT (IN.)	REFERENCE DRAWING	REMARKS	PURCHASE SPEC NUMBER
201	BOILER ANNUNCIATOR				5 HIGH BY 10 WIDE	K-2A
202	BOILER TRIP ANNUNCIATOR				2 HIGH BY 10 WIDE FIRST-OUT SEQUENCE	K-2A
203	TURBINE-GENERATOR ANNUNCIATOR				5 HIGH BY 10 WIDE	K-2A
204	SWITCHGEAR ANNUNCIATOR				2 HIGH BY 10 WIDE	K-2A
205	PURGE AND PRELIGHT SUBPANEL		LATER		PROVIDE CUTOUT, MOUNT AND WIRE	K-34A
206	BURNER CONTROL SUBPANEL		LATER		PROVIDE CUTOUT, MOUNT AND WIRE	K-34A
207	TURBINE PROTECTION SUBPANEL		17X12-1/2	K-1004		K-2A
208	BOILER EMERGENCY TRIP		5X3	K-1006		K-2A
209	TURBINE EMERGENCY TRIP		5X3	K-1006		K-2A
210	NOT USED					

DATE	REVISION OR ISSUE	NO.	BY

BLACK & VEATCH INTERNATIONAL
CONSULTING ENGINEERS
KANSAS CITY, MO.

PERUSAHAAN UMUM LISTRIK NEGARA
AGENCY OF MINISTRY OF PUBLIC WORKS AND POWER
GOVERNMENT OF REPUBLIC OF INDONESIA
SEMARANG STEAM POWER PLANT
100 (2X50) MW
UNITS 1 & 2

INSTRUMENT LIST
SUBPANELS

PROJECT 6104

SHEET 2SP-1

ITEM NO. 2CP-	DESCRIPTION	TYPE	OVERALL SIZE WIDTH X HEIGHT (IN.)	REFERENCE DRAWING	REMARKS	PURCHASE SPEC NUMBER
211	TURBINE SPEED, VALVE POSITION AND ECCENTRICITY POWER UNIT		LATER		PROVIDE CUTOUT, MOUNT AND WIRE	M-10A
212	EXPANSION POWER UNIT		LATER		PROVIDE CUTOUT, MOUNT AND WIRE	M-10A
213	VIBRATION POWER UNIT		LATER		PROVIDE CUTOUT, MOUNT AND WIRE	M-10A
214	SOOT BLOWER SUBPANEL		LATER		PROVIDE CUTOUT, MOUNT AND WIRE	M-36A

DATE	REVISION OR ISSUE	NO.	BY

BLACK & VEATCH INTERNATIONAL
CONSULTING ENGINEERS
KANSAS CITY, MO.

PERUSAHAAN UMUM LISTRIK NEGARA
AGENCY OF MINISTRY OF PUBLIC WORKS AND POWER
GOVERNMENT OF REPUBLIC OF INDONESIA
SEMARANG STEAM POWER PLANT
100 (2X50) MW
UNITS 1 & 2

INSTRUMENT LIST
SUBPANELS

PROJECT 6104

SHEET 2SP-2

F C1-C20B

ITEM NO. 2CP-	DESCRIPTION	REMARKS	PURCHASE SPEC NUMBER
231	ANNUNCIATOR HORN	AS REQUIRED BY ANNUNCIATOR	K-2A
232	TEMPERATURE MONITOR MULTI-BANK INPUTS	LEEDS & NORTHRUP	K-2A
233	ALARM MODULES	MOORE INDUSTRIES SERIES TCA DUAL ALARM TRIP WITH OPTION DD (DOWNSCALE OPEN INPUT DRIVE)	K-2A
234	NOT USED		
235	DELAY CONTROL UNIT	CLARK-RELIANCE	K-2A
236	TRANSFORMERS IN PARALLEL ALARM BUZZER	FURNISH FOR 2CP-173	K-2A
237	NOT USED		

DATE	REVISION OR ISSUE	NO.	BY

BLACK & VEATCH INTERNATIONAL
CONSULTING ENGINEERS
KANSAS CITY, MO.

PERUSAHAAN UMUM LISTRIK NEGARA
AGENCY OF MINISTRY OF PUBLIC WORKS AND POWER
GOVERNMENT OF REPUBLIC OF INDONESIA
SEMARANG STEAM POWER PLANT
100 (2X50) MW UNITS 1 & 2

INSTRUMENT LIST
INTERNAL ITEMS

PROJECT 6104

SHEET 2INT-1

ITEM NO.	DESCRIPTION	OPERATING TORQUE FT-LB	NO LOAD SPEED SEC	TYPE		ENCLOSURE			ADJUSTABLE LIMIT STOPS		AIR FAILURE BRAKE
				SIMPLE CYLINDER	MODULATING	OPEN	DUST TIGHT	FREEZE PROOFED	MAXIMUM	MINIMUM	
2PCD-1	FD FAN INLET VANES	1600			X		X		X	X	
2PCD-2	FD FAN DISCHARGE DAMPER	2000			X		X		X	X	

ITEM NO.	SOLENOID VALVE				LIMIT SWITCHES		POSITION TRANSMITTER	MANUAL OPERATOR	MAN-AUTO SELECTOR STATION	LINKAGE DRAWINGS	REMARKS	PURCHASE SPEC NUMBER
	3-WAY	4-WAY	A-C	D-C	OPEN	CLOSED						
2PCD-1					2 DPDT	2 DPDT		X		X		K-2A
2PCD-2					2 DPDT	2 DPDT		X		X		K-2A

DATE	REVISION OR ISSUE	NO.	BY

BLACK & VEATCH INTERNATIONAL
CONSULTING ENGINEERS
KANSAS CITY, MO.

PERUSAHAAN UMUM LISTRIK NEGARA
AGENCY OF MINISTRY OF PUBLIC WORKS AND POWER
GOVERNMENT OF REPUBLIC OF INDONESIA
SEMARANG STEAM POWER PLANT
100 (2X50) MW UNITS 1 & 2

INSTRUMENT LIST
PNEUMATIC CONTROL DRIVES

PROJECT 6104

SHEET 2PCD-1

ITEM NO.	DESCRIPTION	TRANSMITS TO	TRANSMITTER INFORMATION				SYSTEM MAXIMUM		VALVES REQ'D	REMARKS	PURCHASE SPEC NUMBER
			SIGNAL		RANGE	PRIMARY DEVICE	PRESS.	TEMP.			
			E	P							
2AT-1	FUEL OIL VISCOSITY	2CP-6.3		X	0 TO 500 SSU				NO	PROVIDE E/P TRANSDUCER	K-2A
2AT-2	FLUE GAS ANALYZER	2CP-7.1 2CP-7.2	X		0 TO 10%				AS REQ'D	2 ALARM CONTACTS LOW O2 AND HIGH COMBUSTIBLES	K-2A
2AT-3	NOT USED										
2AT-4	NOT USED										
2AT-5	NOT USED										
2AT-6	CONDENSATE CONDUCTIVITY	2CP-13.1	X		LATER				AS REQ'D		K-2A
2AT-7	BFP SUCTION CONDUCTIVITY	2CP-13.2	X		LATER				AS REQ'D		K-2A
2AT-8	STEAM CONDUCTIVITY	2CP-13.3	X		LATER				AS REQ'D		K-2A

DATE	REVISION OR ISSUE	NO.	BY

BLACK & VEATCH INTERNATIONAL
CONSULTING ENGINEERS
KANSAS CITY, MO.

PERUSAHAAN UMUM LISTRIK NEGARA
AGENCY OF MINISTRY OF PUBLIC WORKS AND POWER
GOVERNMENT OF REPUBLIC OF INDONESIA
SEMARANG STEAM POWER PLANT
100 (2X50) MW UNITS 1 & 2

INSTRUMENT LIST
TRANSMITTER EQUIPMENT

PROJECT 6104

SHEET 21R-1

ITEM NO.	DESCRIPTION	TRANSMITS TO	TRANSMITTER INFORMATION				SYSTEM MAXIMUM		VALVES REQ'D	REMARKS	PURCHASE SPEC NUMBER
			SIGNAL		RANGE	PRIMARY DEVICE	PRESS.	TEMP.			
			E	P							
2FT- 1	FEEDWATER FLOW	2CP-2.1 CONTROL		X	0 TO 750,000 #/HR	NOZZLE			5		K-2A
2FT-2	DESUPERHEATER SPRAY WATER FLOW	2CP-3.3 CONTROL		X	0 TO 75,000 #/HR	NOZZLE			5		K-2A
2FT-3	CONDENSATE FLOW	2CP-4.3 CONTROL		X	0 TO 500,000 #/HR	ORIFICE			5		K-2A
2FT-4	FUEL OIL SUPPLY FLOW	2CP-1.1 CONTROL		X	0 TO 6000 GPH	AREA METER			NO		K-2A
2FT-5	FUEL OIL RETURN FLOW	2CP-1.1 CONTROL		X	0 TO 6000 GPH	AREA METER			NO		K-2A
2FT-6	STEAM FLOW	2CP-2.2 CONTROL		X	0 TO 750,000 #/HR	1ST STAGE PRESS			2		K-2A
2FT-7	AIR FLOW	2CP-1.2 CONTROL		X	0 TO 100%	LATER			NO		K-2A

DATE	REVISION OR ISSUE	NO.	BY

BLACK & VEATCH INTERNATIONAL
CONSULTING ENGINEERS
KANSAS CITY, MO.

PERUSAHAAN UMUM LISTRIK NEGARA
AGENCY OF MINISTRY OF PUBLIC WORKS AND POWER
GOVERNMENT OF REPUBLIC OF INDONESIA
SEMARANG STEAM POWER PLANT
100 (2X50) MW UNITS 1 & 2

INSTRUMENT LIST
TRANSMITTER EQUIPMENT

PROJECT 6104

SHEET 2TR-2

ITEM NO.	DESCRIPTION	TRANSMITS TO	TRANSMITTER INFORMATION SIGNAL E	P	RANGE	PRIMARY DEVICE	SYSTEM MAXIMUM PRESS.	TEMP.	VALVES REQ'D	REMARKS	PURCHASE SPEC NUMBER
2LT-1	HP HEATER 2E LEVEL	2CP-27A		X	LATER	DIS-PLACER			NO		K-2A
2LT-2	HP HEATER 2D LEVEL	2CP-27B		X	LATER	DIS-PLACER			NO		K-2A
2LT-3	LP HEATER 2B LEVEL	2CP-27C		X	LATER	DIS-PLACER			NO		K-2A
2LT-4	LP HEATER 2A LEVEL	2CP-27D		X	LATER	DIS-PLACER			NO		K-2A
2LT-5	DEAERATOR 2C LEVEL	2CP-27E		X	LATER	DIS-PLACER			NO		K-2A
2LT-6	HOTWELL LEVEL	2CP-4.1 2CP-24B		X	LATER	DIS-PLACER			NO		K-2A
2LT-7	CONDENSATE TANK LEVEL	2CP-24C		X	LATER						K-2A
2LT-8	CONDENSATE TANK LEVEL	2CP-24D		X	LATER						K-2A
2LT-9	BOILER DRUM LEVEL	1CP-2.3 CONTROL		X	-15 TO 15"WC				5	PRESSURE COMPENSATE	K-2A
2LT-10	BOILER DRUM LEVEL	1CP-21	X		-12 TO 12"WC					RELIANCE EYE-HYE	K-2A

DATE	REVISION OR ISSUE	NO.	BY

BLACK & VEATCH INTERNATIONAL
CONSULTING ENGINEERS
KANSAS CITY, MO.

PERUSAHAAN UMUM LISTRIK NEGARA
AGENCY OF MINISTRY OF PUBLIC WORKS AND POWER
GOVERNMENT OF REPUBLIC OF INDONESIA
SEMARANG STEAM POWER PLANT
100 (2X50) MW UNITS 1 & 2

INSTRUMENT LIST
TRANSMITTER EQUIPMENT

PROJECT 6104

SHEET 2TR-2

ITEM NO.	DESCRIPTION	TRANSMITS TO	TRANSMITTER INFORMATION SIGNAL E	SIGNAL P	RANGE	PRIMARY DEVICE	SYSTEM MAXIMUM PRESS.	TEMP.	VALVES REQ'D	REMARKS	PURCHASE SPEC NUMBER
2PT-1	SUPERHEATER OUTLET PRESSURE	2CP-22D		X	0 TO 2000 PSIG				2		K-2A
2PT-2	THROTTLE STEAM PRESSURE	2CP-1.3 CONTROL		X	0 TO 2000 PSIG				2		K-2A
2PT-3	DEAERATOR PRESSURE	2CP-27F		X	0 TO 125 PSIG				2		K-2A
2PT-4	FEEDWATER PRESSURE	2CP-22A		X	0 TO 2500 PSIG				2		K-2A
2PT-5	FUEL OIL HEADER PRESSURE	2CP-6.1 2CP-26B		X	0 TO 1500 PSIG				2		K-2A
2PT-6	FUEL OIL BURNER PRESSURE	2CP-26C CONTROL		X	0 TO 1500 PSIG				2		K-2A
2PT-7	BOILER DRUM PRESSURE	2CP-22C		X	0 TO 2500 PSIG				2		K-2A
2PT-8	CONDENSER ABSOLUTE PRESSURE	2CP-4.2		X	0 TO 30" Hg				2		K-2A
2PT-9	ECONOMIZER INLET PRESSURE	2CP-22B		X	0 TO 2500 PSIG				2		K-2A
2PT-10	CONDENSATE PUMP DISCH PRESS	2CP-24A		X	0 TO 300 PSIG				2		K-2A

DATE	REVISION OR ISSUE	NO.	BY

BLACK & VEATCH INTERNATIONAL
CONSULTING ENGINEERS
KANSAS CITY, MO.

PERUSAHAAN UMUM LISTRIK NEGARA
AGENCY OF MINISTRY OF PUBLIC WORKS AND POWER
GOVERNMENT OF REPUBLIC OF INDONESIA
SEMARANG STEAM POWER PLANT
100 (2X50) MW UNITS 1 & 2

INSTRUMENT LIST
TRANSMITTER EQUIPMENT

PROJECT 6104

SHEET 2TR-4

ITEM NO.	DESCRIPTION	TRANSMITS TO	TRANSMITTER INFORMATION				SYSTEM MAXIMUM		VALVES REQ'D	REMARKS	PURCHASE OR NUMBER
			SIGNAL		RANGE	PRIMARY DEVICE	PRESS.	TEMP.			
			E	P							
2PT-11	IGNITER OIL PRESSURE	2CP-26A		X	0 TO 150 PSIG				2		K-2A

DATE	REVISION OR ISSUE	NO.	BY

BLACK & VEATCH INTERNATIONAL
CONSULTING ENGINEERS
KANSAS CITY, MO.

PERUSAHAAN UMUM LISTRIK NEGARA
AGENCY OF MINISTRY OF PUBLIC WORKS AND POWER
GOVERNMENT OF REPUBLIC OF INDONESIA
SEMARANG STEAM POWER PLANT
100 (2X50) MW UNITS 1 & 2

INSTRUMENT LIST
TRANSMITTER EQUIPMENT

PROJECT 6104

SHEET 2TR-5

ITEM NO.	DESCRIPTION	TRANSMITS TO	TRANSMITTER INFORMATION SIGNAL E	SIGNAL P	RANGE	PRIMARY DEVICE	SYSTEM MAXIMUM PRESS.	TEMP.	VALVES REQ'D	REMARKS	PURCHASE SPEC NUMBER
2TT-1	STEAM TEMP	2CP-3.1 CONTROL		X	0 TO 650 C	TC TYPE K			NO	PROVIDE TC AND THERMOWELL	K-2A
2TT-2	AIR HEATER AIR IN TEMP	2CP-5.1 CONTROL		X	0 TO 200 C	TC TYPE K			NO	PROVIDE 3 TCs AND 316 SS THERMOWELLS	K-2A
2TT-3	AIR HEATER GAS OUT TEMP	2CP-5.2 CONTROL		X	0 TO 200 C	TC TYPE K			NO	PROVIDE 3 TCs AND 316 SS THERMOWELLS	K-2A
2TT-4	FUEL OIL TEMP	2CP-6.2		X	0 TO 150 C	TC TYPE K			NO	PROVIDE TC AND THERMOWELL	K-2A
2TT-5	DESUPERHEATER OUTLET TEMP	2CP-3.2 CONTROL		X	0 TO 500 C	TC TYPE K			NO	PROVIDE TC	K-2A

DATE	REVISION OR ISSUE	NO.	BY

BLACK & VEATCH INTERNATIONAL
CONSULTING ENGINEERS
KANSAS CITY, MO.

PERUSAHAAN UMUM LISTRIK NEGARA
AGENCY OF MINISTRY OF PUBLIC WORKS AND POWER
GOVERNMENT OF REPUBLIC OF INDONESIA
SEMARANG STEAM POWER PLANT
100 (2X50) MW UNITS 1 & 2

INSTRUMENT LIST
TRANSMITTER EQUIPMENT

PROJECT 6104

SHEET 2TR-6

SERVICE FEEDWATER FLOW

GENERAL	1. ITEM NO./USED WITH ITEM NO.	2PE-1 / 2 FT-1	
	2. PRIMARY ELEMENT TYPE	WELD IN NOZZLE	
	3. PRIMARY ELEMENT MATERIAL	316 SS	
	4. DIFFERENTIAL HEAD ("H_2O")		
SERVICE CONDITIONS	5. FLOW MEDIUM	WATER	
	6. FLOW RATE	MAX=	NORMAL=
		STANDARD CONDITIONS	CONDITIONS
	7. PRESSURE		
	8. BAROMETER		
	9. TEMPERATURE F		
	10. STEAM % MOIST OR GAS % EL. HUMIDITY		
	11. SPECIFIC GRAVITY		
	12. VISCOSITY		
LOCATION	13. PIPE MATERIAL/PIPE SIZE		
	14. PIPE SCHED/WALL THICKNESS		
	15. PIPE ID/PIPE ENDS (PIPE ASSY)		
	16. LENGTH STRAIGHT PIPE INLET/OUTLET		
	17. FLOW DIRECTION		
	18. PRI ELEMENT ABOVE OR BELOW METER	ABOVE	
FLG	19. TYPE/USAS RATING/FACING		
	20. AGA ORIF FLANGE UNION		
NIPPLE	21. EXISTING K_1/K_2	VENA CONTRACTA	
	22. SIZE NIPPLE IN K_1/K_2	1 IN / 1 IN	
	23. TYPE NIPPLE OUTLET	SW	
RES	24. RESERVOIR INLET/OUTLET	1 IN SW / 1 IN SW	
	25. RESERVOIR PRESSURE RATING	2500 LB	

REMARKS & SKETCH

PURCHASE SPEC K-2A

DATE	REVISION OR ISSUE	NO.	BY

BLACK & VEATCH INTERNATIONAL
CONSULTING ENGINEERS
KANSAS CITY, MO.

PERUSAHAAN UMUM LISTRIK NEGARA
AGENCY OF MINISTRY OF PUBLIC WORKS AND POWER
GOVERNMENT OF REPUBLIC OF INDONESIA
SEMARANG STEAM POWER PLANT
100 (2X50) MW UNITS 1 & 2

PRIMARY ELEMENT DATA SHEET

PROJECT 6104

SHEET 2PE-1

SERVICE DESUPERHEATER SPRAY WATER VALVE

GENERAL	1. ITEM NO./USED WITH ITEM NO.	2PE-2 / 2FT-2	
	2. PRIMARY ELEMENT TYPE	WELD IN NOZZLE PIPE ASSEMBLY	
	3. PRIMARY ELEMENT MATERIAL	316 SS	
	4. DIFFERENTIAL HEAD ("H_2O")		
SERVICE CONDITIONS	5. FLOW MEDIUM	WATER	
	6. FLOW RATE	MAX=	NORMAL=
		STANDARD CONDITIONS	CONDITIONS
	7. PRESSURE		
	8. BAROMETER		
	9. TEMPERATURE F		
	10. STEAM % MOIST OR GAS % EL. HUMIDITY		
	11. SPECIFIC GRAVITY		
	12. VISCOSITY		
LOCATION	13. PIPE MATERIAL PIPE SIZE		
	14. PIPE SCHED/WALL THICKNESS		
	15. PIPE ID PIPE ENDS (PIPE ASSY)		
	16. LENGTH STRAIGHT PIPE INLET/OUTLET		
	17. FLOW DIRECTION		
	18. PRI ELEMENT ABOVE OR BELOW METER	ABOVE	
FLG	19. TYPE/USAS RATING/FACING		
	20. AGA ORIF FLANGE UNION		
NIPPLE	21. EXISTING K_1/K_2	PER MFR	
	22. SIZE NIPPLE IN K_1/K_2	1 IN / 1 IN	
	23. TYPE NIPPLE OUTLET	SW	
RES	24. RESERVOIR INLET/OUTLET	1 IN / 1 IN	
	25. RESERVOIR PRESSURE RATING	2500 LB	

REMARKS & SKETCH

PURCHASE SPEC K-2A

DATE	REVISION OR ISSUE	NO.	BY				

BLACK & VEATCH INTERNATIONAL
CONSULTING ENGINEERS
KANSAS CITY, MO.

PERUSAHAAN UMUM LISTRIK NEGARA
AGENCY OF MINISTRY OF PUBLIC WORKS AND POWER
GOVERNMENT OF REPUBLIC OF INDONESIA
SEMARANG STEAM POWER PLANT
100 (2X50) MW UNITS 1 & 2

PRIMARY ELEMENT DATA SHEET

PROJECT 6104

SHEET 2PE-2

SERVICE CONDENSATE FLOW

GENERAL	1. ITEM NO. USED WITH ITEM NO.	2PE-3 / 2FT-3	
	2. PRIMARY ELEMENT TYPE	ORIFICE	
	3. PRIMARY ELEMENT MATERIAL	316 SS	
	4. DIFFERENTIAL HEAD ("H_2O")		
SERVICE CONDITIONS	5. FLOW MEDIUM	CONDENSATE	
	6. FLOW RATE	MAX=	NORMAL=
	7. PRESSURE	STANDARD CONDITIONS	CONDITIONS
	8. BAROMETER		
	9. TEMPERATURE F		
	10. STEAM % MOIST OR GAS % EL. HUMIDITY		
	11. SPECIFIC GRAVITY		
	12. VISCOSITY		
LOCATION	13. PIPE MATERIAL PIPE SIZE		
	14. PIPE SCHED WALL THICKNESS		
	15. PIPE ID PIPE ENDS (PIPE ASSY)		
	16. LENGTH STRAIGHT PIPE INLET/OUTLET		
	17. FLOW DIRECTION		
	18. PRI ELEMENT ABOVE OR BELOW METER	ABOVE	
FLG	19. TYPE/USAS RATING/FACING		
	20. AGA ORIF FLANGE UNION	YES	
NIPPLE	21. EXISTING K_1 K_2	1 IN / 1 IN	
	22. SIZE NIPPLE IN K_1/K_2	1/2 IN / 1/2 IN	
	23. TYPE NIPPLE OUTLET	SCREWED	
RES	24. RESERVOIR INLET OUTLET	NOT REQUIRED	
	25. RESERVOIR PRESSURE RATING	NOT REQUIRED	

REMARKS & SKETCH

PURCHASE SPEC K-2A

DATE	REVISION OR ISSUE	NO.	BY

BLACK & VEATCH INTERNATIONAL
CONSULTING ENGINEERS
KANSAS CITY, MO.

PERUSAHAAN UMUM LISTRIK NEGARA
AGENCY OF MINISTRY OF PUBLIC WORKS AND POWER
GOVERNMENT OF REPUBLIC OF INDONESIA
SEMARANG STEAM POWER PLANT
100 (2X50) MW UNITS 1 & 2

PRIMARY ELEMENT DATA SHEET

PROJECT 6104

SHEET 2PE-3

ITEM NO.	DESCRIPTION	NAME PLATE	CHART TYPE		RANGE	TRANSMITTER			REMARKS	PURCHASE SPEC NUMBER
			CIRCULAR	STRIP		DIRECT	PNEUMATIC	ELECTRONIC		
EP-1	FLASH EVAPORATOR RECORDER	YES		4"						
	1. NET DISTILLATE FLOW				0 TO 15,000 LBS/HR					K-2A
EP-2	CONDUCTIVITY RECORDER	YES		6-1/2"					L&N SPEED-O-MAX H	
	1. DISTILLATE				LATER			1AT-3		K-2A
	2. BRINE				LATER			1AT-4		
	3. CYCLE MAKEUP				LATER			1AT-5		

DATE	REVISION OR ISSUE	NO.	BY

BLACK & VEATCH INTERNATIONAL
CONSULTING ENGINEERS
KANSAS CITY, MO.

PERUSAHAAN UMUM LISTRIK NEGARA
AGENCY OF MINISTRY OF PUBLIC WORKS AND POWER
GOVERNMENT OF REPUBLIC OF INDONESIA
SEMARANG STEAM POWER PLANT
100 (2X50) MW UNITS 1 & 2

INSTRUMENT LIST
RECORDERS

PROJECT 6104

SHEET EP-1

ITEM NO.	DESCRIPTION	NAME PLATE	INPUT SIGNAL RANGE / SCALE RANGE	MANUFACTURER AND TYPE	TRANSMITTER SIGNAL E	TRANSMITTER SIGNAL P	TRANSMITTER TAG NUMBER	REMARKS	PURCHASE SPEC NUMBER
EP-11	NET DISTILLATE FLOW INTEGRATOR	YES	X100	FOXBORO 14A		X	CONTROL	FURNISH BRAKE ASSEMBLY	K-2A

DATE	REVISION OR ISSUE	NO.	BY

BLACK & VEATCH INTERNATIONAL
CONSULTING ENGINEERS
KANSAS CITY, MO.

PERUSAHAAN UMUM LISTRIK NEGARA
AGENCY OF MINISTRY OF PUBLIC WORKS AND POWER
GOVERNMENT OF REPUBLIC OF INDONESIA
SEMARANG STEAM POWER PLANT
100 (2X50) MW UNITS 1 & 2

INSTRUMENT LIST
INDICATORS

PROJECT 6104

SHEET EP-2

ITEM NO.	DESCRIPTION	NAME PLATE	SWITCH	LIGHTS									PURCHASE SPEC NUMBER
			MANUFACTURER MODEL TYPE	MANUFACTURER MODEL TYPE	COLOR						VOLTAGE	REMARKS	
					RED	WHITE	GREEN	BLUE	AMBER				
EP-21	SEAWATER PUMP 1	YES	GE SB-10	HONEYWELL PTW	1	1	1						K-2A
EP-22	SEAWATER PUMP 2	YES	GE SB-10	HONEYWELL PTW	1	1	1						K-2A
EP-23	ANNUNCIATOR "ACKNOWLEDGE"	YES	PUSH-BUTTON										K-2A
EP-24	ANNUNCIATOR "TEST"	YES	PUSH-BUTTON										K-2A
EP-25	FLASH EVAPORATOR 1	YES										FURNISH NAMEPLATE ONLY	K-2A
EP-26	BRINE PUMP 1	YES	GE SB-1	HONEYWELL PTW	1	1	1						K-2A

DATE	REVISION OR ISSUE	NO.	BY

BLACK & VEATCH INTERNATIONAL
CONSULTING ENGINEERS
KANSAS CITY, MO.

PERUSAHAAN UMUM LISTRIK NEGARA
AGENCY OF MINISTRY OF PUBLIC WORKS AND POWER
GOVERNMENT OF REPUBLIC OF INDONESIA
SEMARANG STEAM POWER PLANT
100 (2X50) MW UNITS 1 & 2

INSTRUMENT LIST
SWITCHES AND LIGHTS

PROJECT 6104

SHEET EP-3

ITEM NO.	DESCRIPTION	FUNCTION			SIGNAL		AUXILIARY FUNCTION	INDICATOR DATA		REMARKS	PURCHASE SPEC NUMBER
		H/A	H	T	E	P		INPUT SIGNAL	SCALE RANGE		
EP-31	MAKEUP-BLOWDOWN RATIO	X				X					K-2A

DATE	REVISION OR ISSUE	NO.	BY

BLACK & VEATCH INTERNATIONAL
CONSULTING ENGINEERS
KANSAS CITY, MO.

PERUSAHAAN UMUM LISTRIK NEGARA
AGENCY OF MINISTRY OF PUBLIC WORKS AND POWER
GOVERNMENT OF REPUBLIC OF INDONESIA
SEMARANG STEAM POWER PLANT
100 (2X50) MW UNITS 1 & 2

INSTRUMENT LIST
PANEL STATIONS

PROJECT 6104

SHEET EP-4

ITEM NO.	DESCRIPTION	TYPE	OVERALL SIZE WIDTH X HEIGHT (IN.)	REFERENCE DRAWING	REMARKS	PURCHASE SPEC NUMBER
EP-41	FLASH EVAPORATOR ANNUNCIATOR				4 HIGH x 6 WIDE	K-2A

DATE	REVISION OR ISSUE	NO.	BY

BLACK & VEATCH INTERNATIONAL
CONSULTING ENGINEERS
KANSAS CITY, MO.

PERUSAHAAN UMUM LISTRIK NEGARA
AGENCY OF MINISTRY OF PUBLIC WORKS AND POWER
GOVERNMENT OF REPUBLIC OF INDONESIA
SEMARANG STEAM POWER PLANT
100 (2X50) MW
UNITS 1 & 2

INSTRUMENT LIST
SUBPANELS

PROJECT 6104

SHEET EP-5

CONTROL VALVE LIST

Valve Tag	Page
CRV-001	CV-1
CRV-003	CV-2
CRV-004	CV-3
CRV-008	CV-4
CRV-013	CV-5
CRV-014	CV-6
CRV-101 & CRV-201	CV-7
CRV-103 & CRV-203	CV-8
CRV-104 & CRV-204	CV-9
CRV-105 & CRV-205	CV-10
CRV-106 & CRV-206	CV-11
CRV-107 & CRV-207	CV-12
CRV-108 & CRV-208	CV-13
CRV-109 & CRV-209	CV-14
CRV-110 & CRV-210	CV-15
CRV-111 & CRV-211	CV-16
CRV-112, CRV-113, CRV-212 & CRV-213	CV-17
CRV-116 & CRV-216	CV-18
CRV-117 & CRV-217	CV-19
CRV-118 & CRV-218	CV-20
CRV-119 & CRV-219	CV-21
CRV-120 & CRV-220	CV-22
CRV-122 & CRV-222	CV-23
CRV-123 & CRV-223	CV-24
CRV-124 & CRV-224	CV-25
CRV-125 & CRV-225	CV-26
CRV-126, CRV-127, CRV-226 & CRV-227	CV-27
CRV-130 & CRV-230	CV-28
SSV-101 & SSV-201	CV-29
SSV-102 & SSV-202	CV-30

VALVE DESCRIPTION

Flow Diagram: 1FD-2 | Number Required: 1 | Valve Tag: CRV-001

Service: AUXILIARY STEAM TO EVAPORATORS

Fluid: SATURATED STEAM | Sp Gr: | Viscosity: | ssu @ | F

VALVE DESIGN

	Design	Low
Flow Rate	15,000 #/HR	
Inlet Pressure	1250 PSI	
Inlet Temperature	572 F	
Outlet Pressure	135 PSI	
Percent Travel		
Preferred	80	
Predicted		

Inner Valve Type: SINGLE PORT - EQUAL PERCENTAGE

Maximum Differential Pressure: 1740 | Maximum Temperature: 617 F

VALVE CONSTRUCTION

Body Type	GLOBE
Body Pressure Class	1500 LB
Body Material	STEEL
Body Ends	SW
Preferred Body Size	1"
Guide Location	CAGED
Cooling Fins	YES

Materials:

Plug	HARDENED STELLITE
Seat Ring	HARDENED STELLITE
Guide Posts	HARDENED STELLITE
Bushings	
Stem	STAINLESS STEEL
Packing	GRAFOIL

VALVE OPERATOR

Type	DIAPHRAGM
Signal Range	AS REQ'D
Valve Action:	
Flow	OPENS
Spring	CLOSES
Signal Increase	OPENS

Accessories:

Positioner	YES
Limit Switch	NO
Handjack	NO
Stops	NO
Air Lock	NO

PRESSURE CONTROLLER

Type	PNEUMATIC
Adjustable Range	0-200
Maximum Pressure	200
Mounting	2" PIPE STAND
Signal Range	AS REQ'D
Reset or Rate	RESET

TEMPERATURE CONTROLLER

Type	
Adjustable Range	
Maximum Press. and Temp.	
Mounting	
Capillary Length	
Pipe Connection	
Reset or Rate	

LEVEL CONTROLLER

Type	
Adjustable Range	
Cage Connections	
Pressure Class	
Signal Range	
Cooling Fins	
Gauge Glasses	
Reset or Rate	

REMARKS

BLACK & VEATCH INTERNATIONAL
CONSULTING ENGINEERS
KANSAS CITY, MO.

PERUSAHAAN UMUM LISTRIK NEGARA
AGENCY OF MINISTRY OF PUBLIC WORKS AND POWER
GOVERNMENT OF REPUBLIC OF INDONESIA
SEMARANG STEAM POWER PLANT
100 (2X50) MW UNITS 1 & 2

CONTROL VALVE SPECIFICATION SHEET

PROJECT 6104

SHEET CV-1

P-GN-009-B

VALVE DESCRIPTION

Flow Diagram: 1FD-2 Number Required: 1 Valve Tag: CRV-003

Service: AUXILIARY STEEM TO DESALINATION FEEDWATER HEATER

Fluid: _____ Sp Gr: _____ Viscosity: _____ ssu @ _____ F

VALVE DESIGN

	Design	Low
Flow Rate	10,000 #/HR	
Inlet Pressure	135 PSI	
Inlet Temperature	350	
Outlet Pressure	12.5 PSI	
Percent Travel		
Preferred		
Predicted		

Inner Valve Type: SINGLE PORT EQUAL PERCENTAGE - RESTRICTED

Maximum Differential Pressure: 175 Maximum Temperature: 385 F

VALVE CONSTRUCTION

Body Type: GLOBE
Body Pressure Class: 300 LB
Body Material: STEEL
Body Ends: BW SCH 40
Preferred Body Size: 3"
Guide Location: CAGED
Cooling Fins: NO

Materials:

Plug: HARDENED STAINLESS STEEL
Seat Ring: HARDENED STAINLESS STEEL
Guide Posts: HARDENED STAINLESS STEEL
Bushings: _____
Stem: STAINLESS STEEL
Packing: TFE-CHEVRON RING

VALVE OPERATOR

Type: DIAPHRAGM
Signal Range: AS REQ'D
Valve Action:
Flow: OPENS
Spring: CLOSES
Signal Increase: _____

Accessories:

Positioner: YES
Limit Switch: NO
Handjack: NO
Stops: NO
Air Lock: NO

PRESSURE CONTROLLER

Type: PNEUMATIC
Adjustable Range: 0-30 PSI
Maximum Pressure: 30 PSI
Mounting: 2" PIPE STAND
Signal Range: AS REQ'D
Reset or Rate: RESET

TEMPERATURE CONTROLLER

Type: _____
Adjustable Range: _____
Maximum Press. and Temp.: _____
Mounting: _____
Capillary Length: _____
Pipe Connection: _____
Reset or Rate: _____

LEVEL CONTROLLER

Type: _____
Adjustable Range: _____
Cage Connections: _____
Pressure Class: _____
Signal Range: _____
Cooling Fins: _____
Gauge Glasses: _____
Reset or Rate: _____

REMARKS

BLACK & VEATCH INTERNATIONAL CONSULTING ENGINEERS KANSAS CITY, MO.	PERUSAHAAN UMUM LISTRIK NEGARA AGENCY OF MINISTRY OF PUBLIC WORKS AND POWER GOVERNMENT OF REPUBLIC OF INDONESIA SEMARANG STEAM POWER PLANT 100 (2X50) MW UNITS 1 & 2 CONTROL VALVE SPECIFICATION SHEET	PROJECT 6104 SHEET CV-2

VALVE DESCRIPTION

Flow Diagram: 1FD-3 | Number Required: 1 | Valve Tag: CRV-004

Service: EXTRACTION STEAM TO DESALINATION

Fluid: STEAM | Sp Gr: | Viscosity: | ssu @ F

VALVE DESIGN

	Design	Low
Flow Rate	9600 #/HR	
Inlet Pressure	17.5 PSI	
Inlet Temperature	430 F	
Outlet Pressure	12.5 PSI	
Percent Travel		
Preferred		
Predicted		
Inner Valve Type		

Maximum Differential Pressure: 82 PSI | Maximum Temperature: 520 F

VALVE CONSTRUCTION

Body Type	GLOBE
Body Pressure Class	150 LB
Body Material	STEEL
Body Ends	BW SCHD 40
Preferred Body Size	6"
Guide Location	CAGED
Cooling Fins	YES

Materials:

Plug	HARDENED STAINLESS STEEL
Seat Ring	HARDENED STAINLESS STEEL
Guide Posts	HARDENED STAINLESS STEEL
Bushings	
Stem	
Packing	TEE - CHEVRON RING

VALVE OPERATOR

Type	DIAPHRAGM
Signal Range	AS REQ'D
Valve Action:	
Flow	OPENS
Spring	CLOSES
Signal Increase	

Accessories:

Positioner	YES
Limit Switch	NO
Handjack	NO
Stops	NO
Air Lock	NO

PRESSURE CONTROLLER

Type	PNEUMATIC
Adjustable Range	0-30 PSI
Maximum Pressure	30 PSI
Mounting	VALVE
Signal Range	AS REQ'D
Reset or Rate	RESET

TEMPERATURE CONTROLLER

Type
Adjustable Range
Maximum Press. and Temp.
Mounting
Capillary Length
Pipe Connection
Reset or Rate

LEVEL CONTROLLER

Type
Adjustable Range
Cage Connections
Pressure Class
Signal Range
Cooling Fins
Gauge Glasses
Reset or Rate

REMARKS

P-GV-009-B

BLACK & VEATCH INTERNATIONAL
CONSULTING ENGINEERS
KANSAS CITY, MO.

PERUSAHAAN UMUM LISTRIK NEGARA
AGENCY OF MINISTRY OF PUBLIC WORKS AND POWER
GOVERNMENT OF REPUBLIC OF INDONESIA
SEMARANG STEAM POWER PLANT
100 (2x50) MW UNITS 1 & 2

CONTROL VALVE
SPECIFICATION SHEET

PROJECT 6104

SHEET CV-3

VALVE DESCRIPTION

Flow Diagram: 1FD-9 Number Required: 1 Valve Tag: CRV-008

Service: LIGHT OIL BACK PRESSURE REGULATOR

Fluid: #2 FUEL OIL Sp Gr: .9 Viscosity: ____ ssu @ ____ F

VALVE DESIGN

	Design	Low
Flow Rate	6 GPM	
Inlet Pressure	225 PSI	
Inlet Temperature	85 F	
Outlet Pressure	10 PSI	
Percent Travel		
Preferred		
Predicted		

Inner Valve Type: SINGLE PORT-QUICK OPENING

Maximum Differential Pressure: 250 Maximum Temperature: 120

VALVE CONSTRUCTION

Body Type: GLOBE
Body Pressure Class: 600 LB
Body Material: STEEL
Body Ends: SCRD
Preferred Body Size: 1"
Guide Location: CAGED
Cooling Fins: NO

Materials:
Plug: STAINLESS STEEL
Seat Ring: STAINLESS STEEL & COMPOSITION
Guide Posts: STAINLESS STEEL
Bushings:
Stem: STAINLESS STEEL
Packing: NONE

VALVE OPERATOR

Type: SELF-CONTAINED
Signal Range: --
Valve Action:
Flow: --
Spring: CLOSES
Signal Increase:

Accessories:
Positioner: NO
Limit Switch: NO
Handjack: NO
Stops: NO
Air Lock: NO

PRESSURE CONTROLLER

Type: SELF-CONTAINED
Adjustable Range: 150-375 PSI
Maximum Pressure: 250 PSI
Mounting: --
Signal Range: --
Reset or Rate: --

TEMPERATURE CONTROLLER

Type:
Adjustable Range:
Maximum Press. and Temp.:
Mounting:
Capillary Length:
Pipe Connection:
Reset or Rate:

LEVEL CONTROLLER

Type:
Adjustable Range:
Cage Connections:
Pressure Class:
Signal Range:
Cooling Fins:
Gauge Glasses:
Reset or Rate:

REMARKS: BACK PRESSURE REGULATOR

BLACK & VEATCH INTERNATIONAL
CONSULTING ENGINEERS
KANSAS CITY, MO.

PERUSAHAAN UMUM LISTRIK NEGARA
AGENCY OF MINISTRY OF PUBLIC WORKS AND POWER
GOVERNMENT OF REPUBLIC OF INDONESIA
SEMARANG STEAM POWER PLANT
100 (2X50) MW UNITS 1 & 2

CONTROL VALVE
SPECIFICATION SHEET

PROJECT 6104

SHEET CV-4

VALVE DESCRIPTION

Flow Diagram: 1FD-13 | Number Required: 1 | Valve Tag: CRV-013

Service: MAKEUP TO FLASH EVAPORATOR

Fluid: SERVICE WATER | Sp Gr: | Viscosity: | ssu @ F

VALVE DESIGN

	Design	Low
Flow Rate	35 GPM	
Inlet Pressure	35 PSI	
Inlet Temperature	85 F	
Outlet Pressure	30 PSI	
Percent Travel		
Preferred	75	
Predicted		

Inner Valve Type: SINGLE PORT-EQUAL PERCENTAGE

Maximum Differential Pressure: 75 | Maximum Temperature: 100 F

VALVE CONSTRUCTION

Body Type: GLOBE
Body Pressure Class: 600 LB
Body Material: STEEL
Body Ends: SW
Preferred Body Size: 1-1/2"
Guide Location: CAGED
Cooling Fins: NO

Materials:

Plug: HARDENED STAINLESS STEEL
Seat Ring: HARDENED STAINLESS STEEL
Guide Posts: HARDENED STAINLESS STEEL
Bushings:
Stem: STAINLESS STEEL
Packing: TFE - CHEVRON RING

VALVE OPERATOR

Type: DIAPHRAGM
Signal Range: AS REQ'D
Valve Action:
Flow: OPENS
Spring: CLOSES
Signal Increase: OPENS

Accessories:

Positioner: YES
Limit Switch: NO
Handjack: YES
Stops: NO
Air Lock: NO

PRESSURE CONTROLLER

Type:
Adjustable Range:
Maximum Pressure:
Mounting:
Signal Range:
Reset or Rate:

TEMPERATURE CONTROLLER

Type:
Adjustable Range:
Maximum Press. and Temp.:
Mounting:
Capillary Length:
Pipe Connection:
Reset or Rate:

LEVEL CONTROLLER

Type: DISPLACEMENT
Adjustable Range: 0-14"
Cage Connections: 2" SW
Pressure Class: 150 LB
Signal Range: AS REQ'D
Cooling Fins: NO
Gauge Glasses: NO
Reset or Rate: NO

REMARKS

BLACK & VEATCH INTERNATIONAL
CONSULTING ENGINEERS
KANSAS CITY, MO.

PERUSAHAAN UMUM LISTRIK NEGARA
AGENCY OF MINISTRY OF PUBLIC WORKS AND POWER
GOVERNMENT OF REPUBLIC OF INDONESIA
SEMARANG STEAM POWER PLANT
100 (2X50) MW UNITS 1 & 2

CONTROL VALVE
SPECIFICATION SHEET

PROJECT 6104

SHEET CV-5

P-GV-009-B

VALVE DESCRIPTION

Flow Diagram: 1FD-13 Number Required: 1 Valve Tag: CRV-014

Service: FLASH EVAPORATOR BLOWDOWN

Fluid: _____ Sp Gr: _____ Viscosity: _____ ssu @ _____ F

VALVE DESIGN

	Design	Low
Flow Rate	10 GPM	
Inlet Pressure	22 PSI	
Inlet Temperature	140 F	
Outlet Pressure	20 PSI	
Percent Travel		
Preferred		
Predicted		
Inner Valve Type	SINGLE PORT - EQUAL PERCENTAGE	
Maximum Differential Pressure	50 PSI	Maximum Temperature: 212 F

VALVE CONSTRUCTION

Body Type	GLOBE
Body Pressure Class	600 LB
Body Material	STEEL
Body Ends	SW
Preferred Body Size	1"
Guide Location	CAGED
Cooling Fins	NO

Materials:

Plug	HARDENED STAINLESS STEEL
Seat Ring	HARDENED STAINLESS STEEL
Guide Posts	HARDENED STAINLESS STEEL
Bushings	
Stem	STAINLESS STEEL
Packing	TEE - CHEVRON RING

VALVE OPERATOR

Type	DIAPHRAGM
Signal Range	
Valve Action:	
Flow	OPENS
Spring	CLOSES
Signal Increase	OPENS

Accessories:

Positioner	YES
Limit Switch	NO
Handjack	NO
Stops	NO
Air Lock	NO

PRESSURE CONTROLLER

Type
Adjustable Range
Maximum Pressure
Mounting
Signal Range
Reset or Rate

TEMPERATURE CONTROLLER

Type
Adjustable Range
Maximum Press. and Temp.
Mounting
Capillary Length
Pipe Connection
Reset or Rate

LEVEL CONTROLLER

Type
Adjustable Range
Cage Connections
Pressure Class
Signal Range
Cooling Fins
Gauge Glasses
Reset or Rate

REMARKS

BLACK & VEATCH INTERNATIONAL
CONSULTING ENGINEERS
KANSAS CITY, MO.

PERUSAHAAN UMUM LISTRIK NEGARA
AGENCY OF MINISTRY OF PUBLIC WORKS AND POWER
GOVERNMENT OF REPUBLIC OF INDONESIA
SEMARANG STEAM POWER PLANT
100 (2X50) MW UNITS 1 & 2

CONTROL VALVE
SPECIFICATION SHEET

PROJECT 6104

SHEET CV-6

VALVE DESCRIPTION

Flow Diagram: 2FD-2 / 1FD-2

Number Required: 2

Valve Tag: CRV-201 / CRV-101

Service: AUXILIARY STEAM TO DEAERATOR

Fluid: STEAM

Sp Gr ____ Viscosity ____ ssu @ ____ F

VALVE DESIGN

	Design	Low
Flow Rate	10,000 #/HR	4600 #/HR
Inlet Pressure	1250 PSI	1250 PSI
Inlet Temperature	572 F	572 F
Outlet Pressure	10 PSI	10 PSI
Percent Travel		
Preferred		
Predicted		

Inner Valve Type: SINGLE PORT - EQUAL PERCENTAGE

Maximum Differential Pressure ____ Maximum Temperature ____

VALVE CONSTRUCTION

Body Type: GLOBE
Body Pressure Class: 1500 LB
Body Material: STEEL
Body Ends: SW
Preferred Body Size: 1"
Guide Location: CAGED
Cooling Fins: YES

Materials:

Plug: HARDENED STELLITE
Seat Ring: HARDENED STELLITE
Guide Posts: HARDENED STELLITE
Bushings:
Stem: STAINLESS STEEL
Packing: GRAFOIL

VALVE OPERATOR

Type: DIAPHRAGM
Signal Range:
Valve Action:
Flow: OPENS
Spring: CLOSES
Signal Increase: OPENS

Accessories:

Positioner: NO
Limit Switch: NO
Handjack: NO
Stops: NO
Air Lock: NO

PRESSURE CONTROLLER

Type: PNEUMATIC
Adjustable Range: 0-60 PSI
Maximum Pressure: 60 PSI
Mounting: 2" PIPE STAND
Signal Range: AS REQ'D
Reset or Rate: RESET

TEMPERATURE CONTROLLER

Type
Adjustable Range
Maximum Press. and Temp.
Mounting
Capillary Length
Pipe Connection
Reset or Rate

LEVEL CONTROLLER

Type
Adjustable Range
Cage Connections
Pressure Class
Signal Range
Cooling Fins
Gauge Glasses
Reset or Rate

REMARKS

BLACK & VEATCH INTERNATIONAL
CONSULTING ENGINEERS
KANSAS CITY, MO.

PERUSAHAAN UMUM LISTRIK NEGARA
AGENCY OF MINISTRY OF PUBLIC WORKS AND POWER
GOVERNMENT OF REPUBLIC OF INDONESIA
SEMARANG STEAM POWER PLANT
100 (2X50) MW UNITS 1 & 2

CONTROL VALVE
SPECIFICATION SHEET

PROJECT 6104

SHEET CV-7

P-GN-009-B

VALVE DESCRIPTION 2FD-3

Flow Diagram 1FD-3 Number Required 2 Valve Tag CRV-203 ~~CRV-103~~

Service EXTRACTION BACKUP TO DEAERATOR

Fluid STEAM Sp Gr ____ Viscosity ____ ssu @ ____ F

VALVE DESIGN

	Design	Low
Flow Rate	10,000 #/HR	
Inlet Pressure	25 PSI	
Inlet Temperature	650 F	
Outlet Pressure	10 PSI	
Percent Travel		
Preferred		
Predicted		

Inner Valve Type SINGLE PORT - EQUAL PERCENTAGE

Maximum Differential Pressure 115 PSI Maximum Temperature 675 F

VALVE CONSTRUCTION

Body Type GLOBE

Body Pressure Class 300 LB

Body Material STEEL

Body Ends BW SCH 40

Preferred Body Size 4"

Guide Location CAGED

Cooling Fins YES

Materials:

Plug HARDENED STAINLESS STEEL

Seat Ring HARDENED STAINLESS STEEL

Guide Posts HARDENED STAINLESS STEEL

Bushings

Stem STAINLESS STEEL

Packing GRAFOIL

VALVE OPERATOR

Type DIAPHRAGM

Signal Range AS REQ'D

Valve Action:

Flow OPENS

Spring CLOSES

Signal Increase OPENS

Accessories:

Positioner YES

Limit Switch NO

Handjack NO

Stops NO

Air Lock NO

PRESSURE CONTROLLER

Type PNEUMATIC

Adjustable Range 0-30 PSI

Maximum Pressure 30 PSI

Mounting VALVE

Signal Range AS REQ'D

Reset or Rate RESET

TEMPERATURE CONTROLLER

Type

Adjustable Range

Maximum Press. and Temp.

Mounting

Capillary Length

Pipe Connection

Reset or Rate

LEVEL CONTROLLER

Type

Adjustable Range

Cage Connections

Pressure Class

Signal Range

Cooling Fins

Gauge Glasses

Reset or Rate

REMARKS

BLACK & VEATCH INTERNATIONAL CONSULTING ENGINEERS KANSAS CITY, MO.	PERUSAHAAN UMUM LISTRIK NEGARA AGENCY OF MINISTRY OF PUBLIC WORKS AND POWER GOVERNMENT OF REPUBLIC OF INDONESIA SEMARANG STEAM POWER PLANT 100 (2X50) MW UNITS 1 & 2	PROJECT 6104
	CONTROL VALVE SPECIFICATION SHEET	SHEET CV-8

VALVE DESCRIPTION 2FD-4

Flow Diagram 1FD-4 Number Required 2 Valve Tag CRV-204 CRV-104

Service HP HEATERS 1E & 2E TO DEAERATORS 1C & 2C

Fluid FLASHING CONDENSATE Sp Gr ____ Viscosity ____ ssu @ ____ F

VALVE DESIGN

	Design	Low
Flow Rate	36,000 #/HR	5300
Inlet Pressure	411 PSIA	74 PSIA
Inlet Temperature	387 F	281 F
Outlet Pressure	94 PSIA	22 PSIA
Percent Travel -		
Preferred	75	
Predicted		

Inner Valve Type SINGLE PORT - EQUAL PERCENTAGE

Maximum Differential Pressure 400 PSI Maximum Temperature 415 F

VALVE CONSTRUCTION

Body Type GLOBE

Body Pressure Class 600 LB

Body Material 5% CR STEEL

Body Ends SW

Preferred Body Size 1-1/2"

Guide Location CAGED

Cooling Fins

Materials:

Plug HARDENED STAINLESS STEEL

Seat Ring HARDENED STAINLESS STEEL

Guide Posts HARDENED STAINLESS STEEL

Bushings

Stem STAINLESS STEEL

Packing TFE - CHEVRON RING

VALVE OPERATOR

Type DIAPHRAGM

Signal Range AS REQ'D

Valve Action:

Flow OPENS

Spring CLOSES

Signal Increase OPENS

Accessories:

Positioner YES

Limit Switch YES - ONE DPDT

Handjack YES

Stops NO

Air Lock NO

PRESSURE CONTROLLER

Type

Adjustable Range

Maximum Pressure

Mounting

Signal Range

Reset or Rate

TEMPERATURE CONTROLLER

Type

Adjustable Range

Maximum Press. and Temp.

Mounting

Capillary Length

Pipe Connection

Reset or Rate

LEVEL TRANSMITTER

Type DISPLACEMENT

Adjustable Range 72"

Cage Connections 2" SW

Pressure Class 300 LB

Signal Range AS REQ'D

Cooling Fins NO

Gauge Glasses NO

Reset or Rate

REMARKS — FURNISH FISHER (OR EQUAL) LEVEL-TROL EXTERNAL CAGE TRANSMITTER AND VALVE MOUNTED RECEIVER CONTROLLER, PROPORTIONAL ~~PLUS RESET.~~ ~~TAG TRANSMITTER 1LT-1 (CRV-104) AND 2LT-1 (CRV-204)~~

1

P-GN-009-B

BLACK & VEATCH INTERNATIONAL
CONSULTING ENGINEERS
KANSAS CITY, MO.

PERUSAHAAN UMUM LISTRIK NEGARA
AGENCY OF MINISTRY OF PUBLIC WORKS AND POWER
GOVERNMENT OF REPUBLIC OF INDONESIA
SEMARANG STEAM POWER PLANT
100 (2X50) MW UNITS 1 & 2

CONTROL VALVE
SPECIFICATION SHEET

PROJECT 6104

SHEET CV-9

REVISION - 1

ADDENDUM - 2

VALVE DESCRIPTION 2FD-4

Flow Diagram 1FD-4 Number Required 2 Valve Tag CRV-205 CRV-105

Service HP HEATER 1E OR 2E TO LP HEATER 1D OR 2D

Fluid FLASHING CONDENSATE Sp Gr ____ Viscosity ____ ssu @ ____ F

VALVE DESIGN

	Design	Low
Flow Rate	36,000 #/HR	5300
Inlet Pressure	432 PSIA	90 PSIA
Inlet Temperature	387 F	281 F
Outlet Pressure	206 PSIA	48 PSIA
Percent Travel		
Preferred	75	
Predicted		

Inner Valve Type SINGLE PORT - EQUAL PERCENTAGE

Maximum Differential Pressure ____ Maximum Temperature ____

VALVE CONSTRUCTION

Body Type GLOBE

Body Pressure Class 600 LB

Body Material 5% CHROME

Body Ends SW

Preferred Body Size 1-1/2"

Guide Location CAGED

Cooling Fins NO

Materials:

Plug HARDENED STAINLESS STEEL

Seat Ring HARDENED STAINLESS STEEL

Guide Posts HARDENED STAINLESS STEEL

Bushings

Stem STAINLESS STEEL

Packing TEE - CHEVRON RING

VALVE OPERATOR

Type DIAPHRAGM

Signal Range AS REQ'D

Valve Action:

Flow OPENS

Spring CLOSES

Signal Increase OPENS

Accessories:

Positioner YES

Limit Switch YES - ONE DPDT

Handjack YES

Stops NO

Air Lock NO

PRESSURE CONTROLLER

Type

Adjustable Range

Maximum Pressure

Mounting

Signal Range

Reset or Rate

TEMPERATURE CONTROLLER

Type

Adjustable Range

Maximum Press. and Temp.

Mounting

Capillary Length

Pipe Connection

Reset or Rate

LEVEL CONTROLLER

Type DISPLACEMENT

Adjustable Range 14"

Cage Connections 2" SW

Pressure Class 300 LB

Signal Range AS REQ'D

Cooling Fins YES

Gauge Glasses NO

Reset or Rate RESET

REMARKS

BLACK & VEATCH INTERNATIONAL
CONSULTING ENGINEERS
KANSAS CITY, MO.

PERUSAHAAN UMUM LISTRIK NEGARA
AGENCY OF MINISTRY OF PUBLIC WORKS AND POWER
GOVERNMENT OF REPUBLIC OF INDONESIA
SEMARANG STEAM POWER PLANT
100 (2X50) MW UNITS 1 & 2

CONTROL VALVE
SPECIFICATION SHEET

PROJECT 6104

SHEET CV-10

VALVE DESCRIPTION 2FD-4
Flow Diagram 1FD-4 Number Required 2 Valve Tag CRV-206 CRV-106
Service HP HEATER 1D & 2D TO LP HEATER 1B & 2B

Fluid FLASHING CONDENSATE Sp Gr ____ Viscosity ____ ssu @ ____ F

VALVE DESIGN

	Design	Low
Flow Rate	10,000 #/HR	57,000 #/HR
Inlet Pressure	46.0 PSIA	185.0 PSIA
Inlet Temperature	246 F	330 F
Outlet Pressure	10 PSIA	45 PSIA
Percent Travel		
Preferred		
Predicted	60	85

Inner Valve Type SINGLE PORT - EQUAL PERCENTAGE RESTRICTED
Maximum Differential Pressure 185 PSI Maximum Temperature 350 F

VALVE CONSTRUCTION

Body Type GLOBE
Body Pressure Class 600 LB
Body Material 5% CHROME
Body Ends SW
Preferred Body Size 2"
Guide Location CAGED
Cooling Fins NO

Materials:
Plug HARDENED STAINLESS STEEL
Seat Ring HARDENED STAINLESS STEEL
Guide Posts HARDENED STAINLESS STEEL
Bushings
Stem STAINLESS STEEL
Packing TFE - CHEVRON RING

VALVE OPERATOR

Type DIAPHRAGM
Signal Range AS REQ'D
Valve Action:
Flow OPENS
Spring CLOSES
Signal Increase OPENS

Accessories:
Positioner YES
Limit Switch YES - ONE DPDT
Handjack YES
Stops NO
Air Lock NO

PRESSURE CONTROLLER

Type
Adjustable Range
Maximum Pressure
Mounting
Signal Range
Reset or Rate

TEMPERATURE CONTROLLER

Type
Adjustable Range
Maximum Press. and Temp.
Mounting
Capillary Length
Pipe Connection
Reset or Rate

LEVEL TRANSMITTER

Type DISPLACEMENT
Adjustable Range 72"
Cage Connections 2" SW
Pressure Class 300 LB
Signal Range AS REQ'D
Cooling Fins NO
Gauge Glasses NO
Reset or Rate -

REMARKS FURNISH FISHER (OR EQUAL) LEVEL-TROL EXTERNAL CAGE TRANSMITTER AND VALVE MOUNTED RECEIVER CONTROLLER, PROPORTIONAL PLUS RESET. TAG TRANSMITTER 1LT-2 (CRV-106) AND 2LT-2 (CRV-206).

1

P-GN-009-8

BLACK & VEATCH INTERNATIONAL
CONSULTING ENGINEERS
KANSAS CITY, MO.

PERUSAHAAN UMUM LISTRIK NEGARA
AGENCY OF MINISTRY OF PUBLIC WORKS AND POWER
GOVERNMENT OF REPUBLIC OF INDONESIA
SEMARANG STEAM POWER PLANT
100 (2X50) MW UNITS 1 & 2

CONTROL VALVE SPECIFICATION SHEET

PROJECT 6104
SHEET CV-11

REVISION - 1
ADDENDUM - 2

VALVE DESCRIPTION 2FD-4

Flow Diagram 1FD-4 Number Required 2 Valve Tag CRV-207 CRV-107

Service HP HEATER 1D & 2D TO DEAERATOR 1C & 2C

Fluid _____ Sp Gr _____ Viscosity _____ ssu @ _____ F

VALVE DESIGN

	Design	Low
Flow Rate	57,000 #/HR	11,200
Inlet Pressure	164 PSIA	30 PSIA
Inlet Temperature	330 F	249.4 F
Outlet Pressure	88 PSIA	25.0 PSIA
Percent Travel		
Preferred	75	
Predicted		

Inner Valve Type SINGLE PORT - EQUAL PERCENTAGE - RESTRICTED

Maximum Differential Pressure 115 Maximum Temperature _____

VALVE CONSTRUCTION

Body Type GLOBE

Body Pressure Class 300 LB

Body Material 5% CHROME

Body Ends BW (SEE REMARKS)

Preferred Body Size 2-1/2"

Guide Location CAGED

Cooling Fins NO

Materials:

Plug HARDENED STAINLESS STEEL

Seat Ring HARDENED STAINLESS STEEL

Guide Posts HARDENED STAINLESS STEEL

Bushings _____

Stem STAINLESS STEEL

Packing TFE - CHEVRON RING

VALVE OPERATOR

Type DIAPHRAGM

Signal Range AS REQ'D

Valve Action:

Flow OPENS

Spring CLOSES

Signal Increase OPENS

Accessories:

Positioner YES

Limit Switch NO

Handjack YES

Stops NO

Air Lock NO

PRESSURE CONTROLLER

Type _____

Adjustable Range _____

Maximum Pressure _____

Mounting _____

Signal Range _____

Reset or Rate _____

TEMPERATURE CONTROLLER

Type _____

Adjustable Range _____

Maximum Press. and Temp. _____

Mounting _____

Capillary Length _____

Pipe Connection _____

Reset or Rate _____

LEVEL CONTROLLER

Type DISPLACEMENT

Adjustable Range 0-14"

Cage Connections 2" SW

Pressure Class 300 LB

Signal Range AS REQ'D

Cooling Fins NO

Gauge Glasses NO

Reset or Rate RESET

REMARKS SCH 40 INLET SCH 80 OUTLET

BLACK & VEATCH INTERNATIONAL
CONSULTING ENGINEERS
KANSAS CITY, MO.

PERUSAHAAN UMUM LISTRIK NEGARA
AGENCY OF MINISTRY OF PUBLIC WORKS AND POWER
GOVERNMENT OF REPUBLIC OF INDONESIA
SEMARANG STEAM POWER PLANT
100 (2X50) MW UNITS 1 & 2

CONTROL VALVE
SPECIFICATION SHEET

PROJECT 6104

SHEET CV-12

VALVE DESCRIPTION 2FD-4
Flow Diagram 1FD-4 Number Required 2 Valve Tag CRV-208 CRV-108
Service LP HEATER 1B & 2B TO CONDENSER 1 & 2

Fluid FLASHING CONDENSATE Sp Gr ____ Viscosity ____ ssu @ ____ F

VALVE DESIGN

	Design	Low
Flow Rate	25,000 #/HR	13,600 #/HR
Inlet Pressure	31.0 PSIA	5.5 PSIA
Inlet Temperature	196 F	138 F
Outlet Pressure	11.0 PSIA	3.0 PSIA
Percent Travel - Preferred	75	
Predicted		

Inner Valve Type SINGLE PORT - EQUAL PERCENTAGE
Maximum Differential Pressure 43 PSIA Maximum Temperature 225 F

VALVE CONSTRUCTION

Body Type GLOBE
Body Pressure Class 600 LB
Body Material 5% CHROME
Body Ends SW
Preferred Body Size 1-1/2"
Guide Location CAGED
Cooling Fins NO

Materials:
Plug HARDENED STAINLESS STEEL
Seat Ring HARDENED STAINLESS STEEL
Guide Post HARDENED STAINLESS STEEL
Bushings
Stem STAINLESS STEEL
Packing TFE - CHEVRON RING

VALVE OPERATOR

Type DIAPHRAGM
Signal Range AS REQ'D
Valve Action:
Flow OPENS
Spring CLOSES
Signal Increase OPENS

Accessories:
Positioner YES
Limit Switch YES - ONE DPDT
Handjack YES
Stops NO
Air Lock NO

PRESSURE CONTROLLER

Type
Adjustable Range
Maximum Pressure
Mounting
Signal Range
Reset or Rate

TEMPERATURE CONTROLLER

Type
Adjustable Range
Maximum Press. and Temp.
Mounting
Capillary Length
Pipe Connection
Reset or Rate

LEVEL TRANSMITTER

Type DISPLACEMENT
Adjustable Range 72"
Cage Connections 2" SW
Pressure Class 300 LB
Signal Range AS REQ'D
Cooling Fins NO
Gauge Glasses NO
Reset or Rate —

1 REMARKS FURNISH FISHER (OR EQUAL) LEVEL-TROL EXTERNAL CAGE TRANSMITTER AND VALVE MOUNTED RECEIVER CONTROLLER, PROPORTIONAL PLUS RESET. TAG TRANSMITTER 1LT-3 (CRV-108) AND 2LT-3 (CRV-208). PROVIDE DOUBLE SEAL PACKING FOR PRESSURE AND VACUUM.

P-GN-009-B

BLACK & VEATCH INTERNATIONAL
CONSULTING ENGINEERS
KANSAS CITY, MO.

PERUSAHAAN UMUM LISTRIK NEGARA
AGENCY OF MINISTRY OF PUBLIC WORKS AND POWER
GOVERNMENT OF REPUBLIC OF INDONESIA
SEMARANG STEAM POWER PLANT
100 (2X50) MW UNITS 1 & 2

CONTROL VALVE
SPECIFICATION SHEET

PROJECT 6104
SHEET CV-13

REVISION - 1
ADDENDUM - 2

VALVE DESCRIPTION 2FD-4

Flow Diagram 1FD-4 Number Required 2 Valve Tag CRV-209 CRV-109

Service LP HEATERS 1B & 2B TO LP HEATERS 1A & 2A

Fluid FLASHING CONDENSATE Sp Gr ____ Viscosity ____ ssu @ ____ F

VALVE DESIGN

	Design	Low
Flow Rate	25,000 #/HR	13,600
Inlet Pressure	33.0 PSIA	6.50 PSIA
Inlet Temperature	196 F	138 F
Outlet Pressure	11 PSIA	3.0 PSIA
Percent Travel		
Preferred		
Predicted		

Inner Valve Type SINGLE PORT - EQUAL PERCENTAGE

Maximum Differential Pressure ____ Maximum Temperature ____

VALVE CONSTRUCTION

Body Type GLOBE

Body Pressure Class 600 LB

Body Material 5% CHROME

Body Ends SW

Preferred Body Size 1-1/2"

Guide Location CAGED

Cooling Fins NO

Materials:

Plug HARDENED STAINLESS STEEL

Seat Ring HARDENED STAINLESS STEEL

Guide Posts HARDENED STAINLESS STEEL

Bushings

Stem STAINLESS STEEL

Packing TFE - CHEVRON RING

VALVE OPERATOR

Type DIAPHRAGM

Signal Range AS REQ'D

Valve Action:

Flow OPENS

Spring CLOSES

Signal Increase OPENS

Accessories:

Positioner YES

Limit Switch NO

Handjack YES

Stops NO

Air Lock NO

PRESSURE CONTROLLER

Type

Adjustable Range

Maximum Pressure

Mounting

Signal Range

Reset or Rate

TEMPERATURE CONTROLLER

Type

Adjustable Range

Maximum Press. and Temp.

Mounting

Capillary Length

Pipe Connection

Reset or Rate

LEVEL CONTROLLER

Type DISPLACEMENT

Adjustable Range 14"

Cage Connections 2" SW

Pressure Class

Signal Range AS REQ'D

Cooling Fins NO

Gauge Glasses NO

Reset or Rate RESET

REMARKS PROVIDE DOUBLE SEAL PACKING FOR PRESSURE AND VACUUM

BLACK & VEATCH INTERNATIONAL
CONSULTING ENGINEERS
KANSAS CITY, MO.

PERUSAHAAN UMUM LISTRIK NEGARA
AGENCY OF MINISTRY OF PUBLIC WORKS AND POWER
GOVERNMENT OF REPUBLIC OF INDONESIA
SEMARANG STEAM POWER PLANT
100 (2X50) MW UNITS 1 & 2

CONTROL VALVE
SPECIFICATION SHEET

PROJECT 6104

SHEET CV-14

VALVE DESCRIPTION: 2FD-4 / 1FD-4 — Number Required: 2 — Valve Tag: CRV-210 / CRV-110

Flow Diagram: 2FD-4 / 1FD-4

Service: LP HEATER 1A & 2A TO CONDENSER 1 & 2

Fluid: FLASHING CONDENSATE — Sp Gr ____ Viscosity ____ ssu @ ____ F

VALVE DESIGN

	Design	Low
Flow Rate	49,200 #/HR	15,400 #/HR
Inlet Pressure	11 PSIA	2.75 PSIA
Inlet Temperature	196 F	138 F
Outlet Pressure	5.0 PSIA	1.5 PSIA
Percent Travel		
Preferred	75	
Predicted		

Inner Valve Type: ____

Maximum Differential Pressure: 15 PSI — Maximum Temperature: 212 F

VALVE CONSTRUCTION

Body Type: GLOBE
Body Pressure Class: 150 LB
Body Material: 5% CHROME
Body Ends: BW (SEE REMARKS)
Preferred Body Size: 4"
Guide Location: CAGED
Cooling Fins: NO

Materials:

Plug: HARDENED STAINLESS STEEL
Seat Ring: HARDENED STAINLESS STEEL
Guide Posts: HARDENED STAINLESS STEEL
Bushings: ____
Stem: STAINLESS STEEL
Packing: TFE - CHEVRON RING

VALVE OPERATOR

Type: DIAPHRAGM
Signal Range: AS REQ'D
Valve Action:
Flow: OPENS
Spring: CLOSES
Signal Increase: OPENS

Accessories:

Positioner: YES
Limit Switch: YES - ONE DPDT
Handjack: YES
Stops: NO
Air Lock: NO

PRESSURE CONTROLLER

Type: ____
Adjustable Range: ____
Maximum Pressure: ____
Mounting: ____
Signal Range: ____
Reset or Rate: ____

TEMPERATURE CONTROLLER

Type: ____
Adjustable Range: ____
Maximum Press. and Temp.: ____
Mounting: ____
Capillary Length: ____
Pipe Connection: ____
Reset or Rate: ____

LEVEL TRANSMITTER

Type: DISPLACEMENT
Adjustable Range: 0-72"
Cage Connections: 2" SW
Pressure Class: 150 LB
Signal Range: AS REQ'D
Cooling Fins: NO
Gauge Glasses: NO
Reset or Rate: ____

REMARKS: FURNISH FISHER (OR EQUAL) LEVEL-TROL EXTERNAL CAGE TRANSMITTER AND VALVE MOUNTED RECEIVER CONTROLLER, PROPORTIONAL PLUS RESET. TAG TRANSMITTER 1LT-4 (CRV-110) AND 2LT-4 (CRV-210)

SCH 40 INLET; SCH 80 OUTLET

1

P-GN-009-B

BLACK & VEATCH INTERNATIONAL
CONSULTING ENGINEERS
KANSAS CITY, MO.

PERUSAHAAN UMUM LISTRIK NEGARA
AGENCY OF MINISTRY OF PUBLIC WORKS AND POWER
GOVERNMENT OF REPUBLIC OF INDONESIA
SEMARANG STEAM POWER PLANT
100 (2X50) MW — UNITS 1 & 2

CONTROL VALVE SPECIFICATION SHEET

PROJECT: 6104

SHEET: CV-15

REVISION - 1
ADDENDUM - 2

VALVE DESCRIPTION 2FD-4

Flow Diagram 1FD-4 Number Required 2 Valve Tag CRV-211 CRV-111

Service LP HEATER 1A & 2A TO CONDENSER 1 & 2

Fluid FLASHING CONDENSATE Sp Gr ____ Viscosity ____ ssu @ ____ F

VALVE DESIGN

	Design	Low
Flow Rate	49,200 #/HR	15,400 #/HR
Inlet Pressure	7.0 PSIA	2.1 PSIA
Inlet Temperature	127 F	119 F
Outlet Pressure	4.5 PSIA	1.2 PSIA
Percent Travel		
Preferred	75%	
Predicted		

Inner Valve Type SINGLE PORT - EQUAL PERCENTAGE

Maximum Differential Pressure 15 Maximum Temperature 212 F

VALVE CONSTRUCTION

Body Type GLOBE

Body Pressure Class 150 LB

Body Material 5% CHROME

Body Ends BW (SEE REMARKS)

Preferred Body Size 3"

Guide Location CAGED

Cooling Fins

Materials:

Plug HARDENED STAINLESS STEEL

Seat Ring HARDENED STAINLESS STEEL

Guide Posts HARDENED STAINLESS STEEL

Bushings

Stem STAINLESS STEEL

Packing TFE - CHEVRON RING

VALVE OPERATOR

Type DIAPHRAGM

Signal Range AS REQ'D

Valve Action:

Flow OPENS

Spring CLOSES

Signal Increase OPENS

Accessories:

Positioner YES

Limit Switch NO

Handjack YES

Stops NO

Air Lock NO

PRESSURE CONTROLLER

Type

Adjustable Range

Maximum Pressure

Mounting

Signal Range

Reset or Rate

TEMPERATURE CONTROLLER

Type

Adjustable Range

Maximum Press. and Temp.

Mounting

Capillary Length

Pipe Connection

Reset or Rate

LEVEL CONTROLLER

Type DISPLACEMENT

Adjustable Range 0-14"

Cage Connections 2" SW

Pressure Class 150 LB

Signal Range AS REQ'D

Cooling Fins NO

Gauge Glasses NO

Reset or Rate RESET

REMARKS PROVIDE DOUBLE SEAL PACKING FOR VACUUM.
SCH 40 INLET; SCH 80 OUTLET

BLACK & VEATCH INTERNATIONAL
CONSULTING ENGINEERS
KANSAS CITY, MO.

PERUSAHAAN UMUM LISTRIK NEGARA
AGENCY OF MINISTRY OF PUBLIC WORKS AND POWER
GOVERNMENT OF REPUBLIC OF INDONESIA
SEMARANG STEAM POWER PLANT
100 (2X50) MW UNITS 1 & 2

CONTROL VALVE
SPECIFICATION SHEET

PROJECT 6104

SHEET CV-16

VALVE DESCRIPTION 2FD-5

Flow Diagram 1FD-5 Number Required 4 Valve Tag CRV-113, CRV-212, CRV-112, CRV-213

Service BOILER FEEDWATER REGULATOR

Fluid CONDENSATE Sp Gr ____ Viscosity ____ ssu @ ____ F

VALVE DESIGN

	Design	Low
Flow Rate	525,000 #/HR	110,000 #/HR
Inlet Pressure	1680 PSI	2010 PSI
Inlet Temperature	329 F	230 F
Outlet Pressure	1620 PSI	1280 PSI
Percent Travel		
Preferred	90%	
Predicted		

Inner Valve Type SINGLE PORT BALANCED - EQUAL PERCENTAGE

Maximum Differential Pressure 2225 Maximum Temperature 340 F

VALVE CONSTRUCTION

Body Type GLOBE
Body Pressure Class 1500 LB
Body Material STEEL
Body Ends BW SCH 120
Preferred Body Size 6" (SEE REMARKS)
Guide Location CAGED
Cooling Fins NO

Materials:
Plug STELLITE
Seat Ring STELLITE
Guide Posts STELLITE
Bushings
Stem STAINLESS STEEL
Packing TFE - CHEVRON RINGS

VALVE OPERATOR

Type PISTON OR DIAPHRAGM
Signal Range AS REQ'D
Valve Action:
Flow OPENS
Spring CLOSES
Signal Increase

Accessories:
Positioner YES
Limit Switch NO
Handjack YES
Stops NO
Air Lock NO

PRESSURE CONTROLLER

Type
Adjustable Range
Maximum Pressure
Mounting
Signal Range
Reset or Rate

TEMPERATURE CONTROLLER

Type
Adjustable Range
Maximum Press. and Temp.
Mounting
Capillary Length
Pipe Connection
Reset or Rate

LEVEL CONTROLLER

Type
Adjustable Range
Cage Connections
Pressure Class
Signal Range
Cooling Fins
Gauge Glasses
Reset or Rate

REMARKS RECEIVES SIGNAL FROM FEEDWATER CONTROL SYSTEM.
VALVE ENDS SHALL BE 6 INCH TO MATE WITH 6 INCH SCH 120 PIPE.

P-GN-009-8

BLACK & VEATCH INTERNATIONAL
CONSULTING ENGINEERS
KANSAS CITY, MO.

PERUSAHAAN UMUM LISTRIK NEGARA
AGENCY OF MINISTRY OF PUBLIC WORKS AND POWER
GOVERNMENT OF REPUBLIC OF INDONESIA
SEMARANG STEAM POWER PLANT
100 (2X50) MW UNITS 1 & 2

CONTROL VALVE SPECIFICATION SHEET

PROJECT 6104

SHEET CV-17

REVISION 1

VALVE DESCRIPTION

Flow Diagram: 2FD-5 / 1FD-5 — Number Required: 2 — Valve Tag: CRV-216 / CRV-116

Service: AIR PREHEAT WATER

Fluid: CONDENSATE — Sp Gr: ____ Viscosity: ____ ssu @ ____ F

VALVE DESIGN

	Design	Low
Flow Rate	150,000 #/HR	
Inlet Pressure	135 PSIA	
Inlet Temperature	210 F	
Outlet Pressure	110 PSI (DISCHARGE TO HEATER)	
Percent Travel	113 PSI (PUMP SUCTION)	
Preferred		
Predicted		

Inner Valve Type: SINGLE PORT - LINEAR

Maximum Differential Pressure: ____ Maximum Temperature: ____

VALVE CONSTRUCTION

Body Type: 3-WAY
Body Pressure Class: 600 LB
Body Material: STEEL
Body Ends: SW
Preferred Body Size: 2"
Guide Location: CAGE
Cooling Fins: NO

Materials:
Plug: STAINLESS STEEL
Seat Ring: STAINLESS STEEL
Guide Posts: STAINLESS STEEL
Bushings:
Stem: STAINLESS STEEL
Packing: TFE - CHEVRON RING

VALVE OPERATOR

Type: DIAPHRAGM
Signal Range: AS REQ'D
Valve Action:
Flow: --
Spring: --
Signal Increase: --

Accessories:
Positioner: YES
Limit Switch: NO
Handjack: NO
Stops: NO
Air Lock: NO

PRESSURE CONTROLLER

Type:
Adjustable Range:
Maximum Pressure:
Mounting:
Signal Range:
Reset or Rate:

TEMPERATURE CONTROLLER

Type:
Adjustable Range:
Maximum Press. and Temp.:
Mounting:
Capillary Length:
Pipe Connection:
Reset or Rate:

LEVEL CONTROLLER

Type:
Adjustable Range:
Cage Connections:
Pressure Class:
Signal Range:
Cooling Fins:
Gauge Glasses:
Reset or Rate:

REMARKS RECEIVES CONTROL SIGNAL FROM AIR HEATER COLD END TEMPERATURE CONTROL SYSTEM. THREE WAY VALVE FOR FLOW SPLITTING SERVICE. ONE INLET AND TWO OUTLETS.

BLACK & VEATCH INTERNATIONAL CONSULTING ENGINEERS KANSAS CITY, MO.	PERUSAHAAN UMUM LISTRIK NEGARA AGENCY OF MINISTRY OF PUBLIC WORKS AND POWER GOVERNMENT OF REPUBLIC OF INDONESIA SEMARANG STEAM POWER PLANT 100 (2X50) MW UNITS 1 & 2	PROJECT 6104
	CONTROL VALVE SPECIFICATION SHEET	SHEET CV-18

VALVE DESCRIPTION

Flow Diagram: 2FD-6 / 1FD-6 — Number Required: 2 — Valve Tag: CRV-217 / CRV-117

Service: CONDENSATE TO DEAERATOR

Fluid: CONDENSATE — Sp Gr: ____ Viscosity: ____ ssu @ ____ F

VALVE DESIGN

	Design	Low	
Flow Rate	434,000 #/HR	95,160 #/HR	0
Inlet Pressure	165 PSIA	240 PSIA	250 PSIA
Inlet Temperature	117 F	117 F	117 F
Outlet Pressure	159 PSIA	44 PSIA	43 PSIA

Percent Travel
- Preferred: 90
- Predicted: ____

Inner Valve Type: SINGLE PORT BALANCED - EQUAL PERCENTAGE

Maximum Differential Pressure: 257 — Maximum Temperature: 212

VALVE CONSTRUCTION

- Body Type: GLOBE
- Body Pressure Class: 150 LB
- Body Material: STEEL
- Body Ends: BW (SCH 40)
- Preferred Body Size: 6"
- Guide Location: CAGED
- Cooling Fins: NO

Materials:

- Plug: HARDENED STAINLESS STEEL
- Seat Ring: HARDENED STAINLESS STEEL
- Guide Posts: HARDENED STAINLESS STEEL
- Bushings: ____
- Stem: STAINLESS STEEL
- Packing: TFE - CHEVRON RINGS

VALVE OPERATOR

- Type: DIAPHRAGM
- Signal Range: AS REQ'D
- Valve Action:
  - Flow: OPENS
  - Spring: CLOSES
  - Signal Increase: OPENS

Accessories:

- Positioner: YES
- Limit Switch: NO
- Handjack: NO
- Stops: NO
- Air Lock: NO

PRESSURE CONTROLLER

- Type: ____
- Adjustable Range: ____
- Maximum Pressure: ____
- Mounting: ____
- Signal Range: ____
- Reset or Rate: ____

TEMPERATURE CONTROLLER

- Type: ____
- Adjustable Range: ____
- Maximum Press. and Temp.: ____
- Mounting: ____
- Capillary Length: ____
- Pipe Connection: ____
- Reset or Rate: ____

LEVEL CONTROLLER

- Type: DISPLACEMENT
- Adjustable Range: 14"
- Cage Connections: 2" SW
- Pressure Class: 150 LB
- Signal Range: AS REQ'D
- Cooling Fins: NO
- Gauge Glasses: NO
- Reset or Rate: RESET

REMARKS: LEVEL CONTROLLER OPERATES ON HOTWELL LEVEL
PROVIDE CAVITATIONS PROTECTION AS REQUIRED

P-GN-009-B

BLACK & VEATCH INTERNATIONAL
CONSULTING ENGINEERS
KANSAS CITY, MO.

PERUSAHAAN UMUM LISTRIK NEGARA
AGENCY OF MINISTRY OF PUBLIC WORKS AND POWER
GOVERNMENT OF REPUBLIC OF INDONESIA
SEMARANG STEAM POWER PLANT
100 (2X50) MW — UNITS 1 & 2

CONTROL VALVE
SPECIFICATION SHEET

PROJECT: 6104

SHEET: CV-19

VALVE DESCRIPTION 2FD-6

Flow Diagram 1FD-6 Number Required 2 Valve Tag CRV-218 CRV-118

Service CONDENSATE RECIRCULATION

Fluid CONDENSATE Sp Gr ____ Viscosity ____ sau @ ____ F

VALVE DESIGN

	Design	Low
Flow Rate	300 GPM	
Inlet Pressure	242.0 PSIA	
Inlet Temperature	110 F	
Outlet Pressure	10 PSIA	
Percent Travel		
Preferred		
Predicted		
Inner Valve Type	SINGLE PORT - LINEAR	

Maximum Differential Pressure 257 Maximum Temperature 212 F

VALVE CONSTRUCTION

Body Type GLOBE
Body Pressure Class 600 LB
Body Material STEEL
Body Ends SW
Preferred Body Size 2"
Guide Location CAGED
Cooling Fins NO

Materials:
Plug STELLITE
Seat Ring STELLITE
Guide Posts HARDENED STAINLESS STEEL
Bushings
Stem STAINLESS STEEL
Packing TFE - CHEVRON RING

VALVE OPERATOR

Type DIAPHRAGM
Signal Range AS REQ'D
Valve Action:
Flow CLOSES
Spring OPENS
Signal Increase CLOSES

Accessories:
Positioner YES
Limit Switch NO
Handjack NO
Stops NO
Air Lock NO

PRESSURE CONTROLLER

Type
Adjustable Range
Maximum Pressure
Mounting
Signal Range
Reset or Rate

TEMPERATURE CONTROLLER

Type
Adjustable Range
Maximum Press. and Temp.
Mounting
Capillary Length
Pipe Connection
Reset or Rate

LEVEL CONTROLLER

Type
Adjustable Range
Cage Connections
Pressure Class
Signal Range
Cooling Fins
Gauge Glasses
Reset or Rate

REMARKS OPERATES FROM CONTROL SIGNAL FROM CONDENSATE FLOW METER. PROVIDE DOUBLE SEALS FOR PRESSURE AND VACUUM. PROVIDE VALVE WITH ADEQUATE CAVITATION PROTECTION.

BLACK & VEATCH INTERNATIONAL
CONSULTING ENGINEERS
KANSAS CITY, MO.

PERUSAHAAN UMUM LISTRIK NEGARA
AGENCY OF MINISTRY OF PUBLIC WORKS AND POWER
GOVERNMENT OF REPUBLIC OF INDONESIA
SEMARANG STEAM POWER PLANT
100 (2X50) MW UNITS 1 & 2

CONTROL VALVE
SPECIFICATION SHEET

PROJECT 6104

SHEET CV-20

VALVE DESCRIPTION

Flow Diagram: 1FD-6 — Number Required: 2 — Valve Tag: CRV-219, CRV-119

Service: DEAERATOR RECIRCULATION TO CONDENSER

Fluid: FLASHING CONDENSATE — Sp Gr: — Viscosity: — ssu @ — F

VALVE DESIGN

	Design	Low
Flow Rate	680 GPM	
Inlet Pressure	30 PSIA	
Inlet Temperature	230 F	
Outlet Pressure	5 PSIA	
Percent Travel		
Preferred	85%	
Predicted		
Inner Valve Type		
Maximum Differential Pressure	100 PSI	
Maximum Temperature	330 F	

VALVE CONSTRUCTION

Body Type: DIAPHRAGM
Body Pressure Class: 150 LB
Body Material: STEEL
Body Ends: BW SCH 40
Preferred Body Size: 6"
Guide Location: CAGED
Cooling Fins: NO

Materials:
Plug: HARDENED STAINLESS STEEL
Seat Ring: HARDENED STAINLESS STEEL
Guide Posts: HARDENED STAINLESS STEEL
Bushings:
Stem: STAINLESS STEEL
Packing: TFE - CHEVRON RINGS

VALVE OPERATOR

Type: DIAPHRAGM
Signal Range: AS REQ'D
Valve Action:
Flow: OPENS
Spring: CLOSES
Signal Increase: OPENS

Accessories:
Positioner: YES
Limit Switch: NO
Handjack: NO
Stops: NO
Air Lock: NO
NO

PRESSURE CONTROLLER

Type:
Adjustable Range:
Maximum Pressure:
Mounting:
Signal Range:
Reset or Rate:

TEMPERATURE CONTROLLER

Type:
Adjustable Range:
Maximum Press. and Temp.:
Mounting:
Capillary Length:
Pipe Connection:
Reset or Rate:

LEVEL CONTROLLER

Type: DISPLACEMENT
Adjustable Range: 0-14"
Cage Connections: 2" SW
Pressure Class: 150 LB
Signal Range: AS REQ'D
Cooling Fins: NO
Gauge Glasses: NO
Reset or Rate: RESET

REMARKS: PROVIDE DOUBLE SEAL PACKING FOR PRESSURE AND VACUUM.
TIGHT SHUTOFF REQUIRED.

BLACK & VEATCH INTERNATIONAL
CONSULTING ENGINEERS
KANSAS CITY, MO.

PERUSAHAAN UMUM LISTRIK NEGARA
AGENCY OF MINISTRY OF PUBLIC WORKS AND POWER
GOVERNMENT OF REPUBLIC OF INDONESIA
SEMARANG STEAM POWER PLANT
100 (2X50) MW — UNITS 1 & 2

CONTROL VALVE SPECIFICATION SHEET

PROJECT: 6104
SHEET: CV-21

P-GN-009-B

VALVE DESCRIPTION

Flow Diagram: 1FD-6 | Number Required: 2 | Valve Tag: CRV-220, CRV-120

Service: CONDENSER MAKEUP

Fluid: MAKEUP WATER | Sp Gr: | Viscosity: | ssu @ F

VALVE DESIGN

	Design	Low
Flow Rate	75 GPM	
Inlet Pressure	70 PSIA	
Inlet Temperature	100 F	
Outlet Pressure	3.5 PSIA	
Percent Travel		
Preferred	75	
Predicted		

Inner Valve Type: SINGLE PORT - EQUAL PERCENTAGE

Maximum Differential Pressure: 20 PSI | Maximum Temperature: 140 F

VALVE CONSTRUCTION

Body Type: GLOBE
Body Pressure Class: 600 LB
Body Material: STEEL
Body Ends: SW
Preferred Body Size: 2"
Guide Location: CAGED
Cooling Fins: NO

Materials:

Plug: HARDENED STAINLESS STEEL
Seat Ring: HARDENED STAINLESS STEEL
Guide Posts: ~~HARDENED STAINLESS STEEL~~
Bushings:
Stem: STAINLESS STEEL
Packing: TFE - CHEVRON RING

VALVE OPERATOR

Type: DIAPHRAGM
Signal Range: AS REQ'D
Valve Action:
Flow: OPENS
Spring: CLOSES
Signal Increase: OPENS

Accessories:

Positioner: YES
Limit Switch: NO
Handjack: NO
Stops: NO
Air Lock: NO

PRESSURE CONTROLLER

Type:
Adjustable Range:
Maximum Pressure:
Mounting:
Signal Range:
Reset or Rate:

TEMPERATURE CONTROLLER

Type:
Adjustable Range:
Maximum Press. and Temp.:
Mounting:
Capillary Length:
Pipe Connection:
Reset or Rate:

LEVEL CONTROLLER

Type: DISPLACEMENT
Adjustable Range: 0-14"
Cage Connections: 2" SW
Pressure Class: 150 LB
Signal Range: AS REQ'D
Cooling Fins: NO
Gauge Glasses: NO
Reset or Rate: RESET

REMARKS: PROVIDE DOUBLE SEAL FOR PRESSURE & VACUUM SERVICE.

BLACK & VEATCH INTERNATIONAL CONSULTING ENGINEERS KANSAS CITY, MO.	PERUSAHAAN UMUM LISTRIK NEGARA AGENCY OF MINISTRY OF PUBLIC WORKS AND POWER GOVERNMENT OF REPUBLIC OF INDONESIA SEMARANG STEAM POWER PLANT 100 (2X50) MW UNITS 1 & 2 CONTROL VALVE SPECIFICATION SHEET	PROJECT 6104 SHEET CV-22

VALVE DESCRIPTION 2FD-6

Flow Diagram 1FD-6

Service CONDENSATE DRAIN — Number Required 2 — Valve Tag CRV-222 CRV-122

Fluid CONDENSATE — Sp Gr ____ Viscosity ____ ssu @ ____ F

VALVE DESIGN

	Design	Low
Flow Rate	250 GPM	
Inlet Pressure	200 PSI	
Inlet Temperature	110 F	
Outlet Pressure	15 PSI	
Percent Travel		
Preferred	75	
Predicted		

Inner Valve Type: SINGLE PORT - EQUAL PERCENTAGE

Maximum Differential Pressure: 260 — Maximum Temperature: 212 F

VALVE CONSTRUCTION

Body Type: GLOBE
Body Pressure Class: 150 LB
Body Material: STEEL
Body Ends: SW
Preferred Body Size: 2"
Guide Location: CAGED
Cooling Fins: NO

Materials:
Plug: HARDENED STAINLESS STEEL
Seat Ring: HARDENED STAINLESS STEEL
Guide Posts: HARDENED STAINLESS STEEL
Bushings:
Stem: STAINLESS STEEL
Packing: TEFLON - CHEVRON RING

VALVE OPERATOR

Type: DIAPHRAGM
Signal Range: AS REQ'D
Valve Action:
Flow: OPENS
Spring: CLOSES
Signal Increase: OPENS

Accessories:
Positioner: YES
Limit Switch: YES - ONE DPDT
Handjack: YES
Stops: NO
Air Lock: NO

PRESSURE CONTROLLER

Type
Adjustable Range
Maximum Pressure
Mounting
Signal Range
Reset or Rate

TEMPERATURE CONTROLLER

Type
Adjustable Range
Maximum Press. and Temp.
Mounting
Capillary Length
Pipe Connection
Reset or Rate

LEVEL CONTROLLER (SEE REMARKS)

Type: DISPLACEMENT
Adjustable Range: 0-72"
Cage Connections: 2" SW
Pressure Class: 150 LB
Signal Range: AS REQ'D
Cooling Fins: NO
Gauge Glasses: NO
Reset or Rate: RESET

REMARKS: FURNISH FISHER MULTI-TROL TRANSMITTER CONTROLLERS OR EQUAL.
TAG TRANSMITTER 1LT-6 (CRV-122) and 2LT-6 (CRV-222)

P-GN-009-8

BLACK & VEATCH INTERNATIONAL
CONSULTING ENGINEERS
KANSAS CITY, MO.

PERUSAHAAN UMUM LISTRIK NEGARA
AGENCY OF MINISTRY OF PUBLIC WORKS AND POWER
GOVERNMENT OF REPUBLIC OF INDONESIA
SEMARANG STEAM POWER PLANT
100 (2X50) MW — UNITS 1 & 2

CONTROL VALVE SPECIFICATION SHEET

PROJECT 6104

SHEET CV-23

VALVE DESCRIPTION 2FD-8

Flow Diagram 1FD-8 Number Required 2 Valve Tag CRV-223 CRV-123

Service AUXILIARY COOLING WATER MAKEUP

Fluid CONDENSATE Sp Gr ____ Viscosity ____ ssu @ ____ F

VALVE DESIGN

	Design	Low
Flow Rate	15 GPM	
Inlet Pressure	150 PSI	
Inlet Temperature	110 F	
Outlet Pressure	10 PSI	
Percent Travel		
Preferred		
Predicted		
Inner Valve Type		

Maximum Differential Pressure 250 PSI Maximum Temperature 120 F

VALVE CONSTRUCTION

Body Type GLOBE
Body Pressure Class 600 LB
Body Material STEEL
Body Ends SW
Preferred Body Size 1"
Guide Location CAGED
Cooling Fins NO

Materials:

Plug STELLITE
Seat Ring STELLITE
Guide Posts HARDENED STAINLESS STEEL
Bushings
Stem STAINLESS STEEL
Packing TFE - CHEVRON RING

VALVE OPERATOR

Type DIAPHRAGM
Signal Range AS REQ'D
Valve Action:
Flow OPENS
Spring CLOSES
Signal Increase OPENS

Accessories:

X Positioner ~~YES~~ NO
Limit Switch NO
Handjack NO
Stops NO
Air Lock NO

PRESSURE CONTROLLER

Type
Adjustable Range
Maximum Pressure
Mounting
Signal Range
Reset or Rate

TEMPERATURE CONTROLLER

Type
Adjustable Range
Maximum Press. and Temp.
Mounting
Capillary Length
Pipe Connection
Reset or Rate

LEVEL CONTROLLER

Type DISPLACEMENT
Adjustable Range 0-14"
Cage Connections 2" SW
Pressure Class 150 LB
Signal Range AS REQ'D
Cooling Fins NO
Gauge Glasses NO
Reset or Rate

REMARKS

X *Level controllers shall be differential gap type with a 12 inch permissible gap adjustment.*

X *Revised in accordance with Item 44 of Addendum 1.*

BLACK & VEATCH INTERNATIONAL
CONSULTING ENGINEERS
KANSAS CITY, MO.

PERUSAHAAN UMUM LISTRIK NEGARA
AGENCY OF MINISTRY OF PUBLIC WORKS AND POWER
GOVERNMENT OF REPUBLIC OF INDONESIA
SEMARANG STEAM POWER PLANT
100 (2X50) MW UNITS 1 & 2

CONTROL VALVE
SPECIFICATION SHEET

PROJECT 6104

SHEET CV-24

VALVE DESCRIPTION 2FD-8

Flow Diagram 1FD-8 CRV-224

Service TURBINE LUBE OIL TEMPERATURE REGULATOR Number Required 2 Valve Tag CRV-124

Fluid AUXILIARY COOLING WATER Sp Gr ____ Viscosity ____ ssu @ ____ F

VALVE DESIGN

	Design	Low
Flow Rate	270 GPM	
Inlet Pressure	44 FT	
Inlet Temperature	115 F	
Outlet Pressure	40 FT	
Percent Travel		
Preferred		
Predicted		

Inner Valve Type BUTTERFLY - EQUAL PERCENTAGE

Maximum Differential Pressure 100 FT Maximum Temperature 130 F

VALVE CONSTRUCTION

Body Type BUTTERFLY

Body Pressure Class 150 LB

X Body Material STEEL

Body Ends ~~RWxSGWx40~~ 150# FLGD

Preferred Body Size 4"

Guide Location -

Cooling Fins NO

Materials:

Disc STAINLESS STEEL

Seat Ring -

Guide Posts -

Bushings -

Stem STAINLESS STEEL

Packing TFE - CHEVRON RING

VALVE OPERATOR

Type DIAPHRAGM

Signal Range

Valve Action:

Flow -

Spring OPENS

Signal Increase CLOSES

Accessories:

Positioner YES

Limit Switch NO

Handjack YES

Stops NO

Air Lock NO

~~**PRESSURE CONTROLLER**~~

~~Type~~

~~Adjustable Range~~

~~Maximum Pressure~~

~~Mounting~~

~~Signal Range~~

~~Reset or Rate~~

~~**TEMPERATURE CONTROLLER**~~

~~Type~~

~~Adjustable Range~~

~~Maximum Press. and Temp.~~

~~Mounting~~

~~Capillary Length~~

~~Pipe Connection~~

~~Reset or Rate~~

~~**LEVEL CONTROLLER**~~

~~Type~~

~~Adjustable Range~~

~~Cage Connections~~

~~Pressure Class~~

~~Signal Range~~

~~Cooling Fins~~

~~Gauge Glasses~~

~~Reset or Rate~~

REMARKS RECEIVES CONTROL SIGNAL FROM TURBINE LUBE OIL TEMPERATURE CONTROL SYSTEM.

X Revised in accordance with Item 45 of Addendum 1.

P-GV-009-B

BLACK & VEATCH INTERNATIONAL
CONSULTING ENGINEERS
KANSAS CITY, MO.

PERUSAHAAN UMUM LISTRIK NEGARA
AGENCY OF MINISTRY OF PUBLIC WORKS AND POWER
GOVERNMENT OF REPUBLIC OF INDONESIA
SEMARANG STEAM POWER PLANT
100 (2X50) MW UNITS 1 & 2

CONTROL VALVE
SPECIFICATION SHEET

PROJECT 6104

SHEET CV-25

VALVE DESCRIPTION

Flow Diagram: 2FD-8 / 1FD-8

Service: HYDROGEN TEMPERATURE

Number Required: 2

Valve Tag: CRV-225 / CRV-125

Fluid: AUXILIARY COOLING WATER

Sp Gr: ____ Viscosity: ____ ssu @ ____ F

VALVE DESIGN

	Design	Low
Flow Rate	520 GPM	
Inlet Pressure	44 FT	
Inlet Temperature	115 F	
Outlet Pressure	40 FT	
Percent Travel		
Preferred		
Predicted		

Inner Valve Type: BUTTERFLY - EQUAL PERCENTAGE

Maximum Differential Pressure: 100 FT

Maximum Temperature: 130 F

VALVE CONSTRUCTION

Body Type: BUTTERFLY

Body Pressure Class: 150 LB

Body Material: STEEL

X Body Ends: ~~BW SCH/40/~~ 150# FLGD

Preferred Body Size: 6"

Guide Location: -

Cooling Fins: NO

Materials:

Disc: STAINLESS STEEL

Seat Ring: -

Guide Posts: -

Bushings: -

Stem: STAINLESS STEEL

Packing: TFE - CHEVRON RINGS

VALVE OPERATOR

Type: DIAPHRAGM

Signal Range: AS REQ'D

Valve Action:

Flow: -

Spring: OPENS

Signal Increase: CLOSES

Accessories:

Positioner: YES

Limit Switch: NO

Handjack: YES

Stops: NO

Air Lock: NO

PRESSURE CONTROLLER

Type

Adjustable Range

Maximum Pressure

Mounting

Signal Range

Reset or Rate

TEMPERATURE CONTROLLER

Type

Adjustable Range

Maximum Press. and Temp.

Mounting

Capillary Length

Pipe Connection

Reset or Rate

LEVEL CONTROLLER

Type

Adjustable Range

Cage Connections

Pressure Class

Signal Range

Cooling Fins

Gauge Glasses

Reset or Rate

REMARKS: RECEIVES SIGNAL FROM HYDROGEN TEMPERATURE CONTROL SYSTEM.

X Revised in accordance with Item 46 of Addendum 1.

BLACK & VEATCH INTERNATIONAL
CONSULTING ENGINEERS
KANSAS CITY, MO.

PERUSAHAAN UMUM LISTRIK NEGARA
AGENCY OF MINISTRY OF PUBLIC WORKS AND POWER
GOVERNMENT OF REPUBLIC OF INDONESIA
SEMARANG STEAM POWER PLANT
100 (2X50) MW UNITS 1 & 2

CONTROL VALVE SPECIFICATION SHEET

PROJECT 6104

SHEET CV-26

VALVE DESCRIPTION	2FD-9				CRV-127
Flow Diagram	1FD-9	Number Required	4	Valve Tag	CRV-226
Service	FUEL OIL RETURN				CRV-126
					CRV-227
Fluid	#6 FUEL OIL	Sp Gr		Viscosity	ssu @ F

VALVE DESIGN	Design	Low
Flow Rate	70 GPM	
Inlet Pressure	350 PSI	
Inlet Temperature	225 F	
Outlet Pressure	35 PSI	
Percent Travel		
Preferred	75	
Predicted		
Inner Valve Type	SINGLE PORT - EQUAL PERCENTAGE	
Maximum Differential Pressure	800 PSI	Maximum Temperature 250 F

VALVE CONSTRUCTION		Materials:	
Body Type	GLOBE	Plug	STELLITE
Body Pressure Class	600 LB	Seat Ring	STELLITE
Body Material	STEEL	Guide Posts	HARDENED STAINLESS
Body Ends	SW	Bushings	
Preferred Body Size	1"	Stem	STAINLESS STEEL
Guide Location	CAGE	Packing	TFE - CHEVRON RING
Cooling Fins	NO		

VALVE OPERATOR		Accessories:	
Type	DIAPHRAGM	Positioner	YES
Signal Range	AS REQ'D	Limit Switch	NO
Valve Action:		Handjack	NO
Flow	OPENS	Stops	NO
Spring	CLOSES	Air Lock	NO
Signal Increase			

PRESSURE CONTROLLER	TEMPERATURE CONTROLLER	LEVEL CONTROLLER
Type	Type	Type
Adjustable Range	Adjustable Range	Adjustable Range
Maximum Pressure	Maximum Press. and Temp.	Cage Connections
Mounting		Pressure Class
Signal Range	Mounting	Signal Range
Reset or Rate	Capillary Length	Cooling Fins
	Pipe Connection	Gauge Glasses
	Reset or Rate	Reset or Rate

REMARKS CONTROL SIGNAL FROM COMBUSTION CONTROL SYSTEM.

BLACK & VEATCH INTERNATIONAL CONSULTING ENGINEERS KANSAS CITY, MO.	PERUSAHAAN UMUM LISTRIK NEGARA AGENCY OF MINISTRY OF PUBLIC WORKS AND POWER GOVERNMENT OF REPUBLIC OF INDONESIA SEMARANG STEAM POWER PLANT 100 (2X50) MW UNITS 1 & 2	PROJECT 6104
	CONTROL VALVE SPECIFICATION SHEET	SHEET CV-27

P-GN-CO9-8

VALVE DESCRIPTION 2FD-15

Flow Diagram 1FD-15 Number Required 2 Valve Tag CRV-230 CRV-130

Service DRAINS RECEIVER TO CONDENSER

Fluid CONDENSATE Sp Gr ____ Viscosity ____ ssu @ ____ F

VALVE DESIGN

	Design	Low
Flow Rate	40 GPM	
Inlet Pressure	ATMOSPHERE	
Inlet Temperature	120 F	
Outlet Pressure	10 PSIA	
Percent Travel -		
Preferred		
Predicted		
Inner Valve Type	SINGLE PORT - EQUAL PERCENTAGE	
Maximum Differential Pressure	20 PSI	
Maximum Temperature	160 F	

VALVE CONSTRUCTION

Body Type: GLOBE
Body Pressure Class: 600 LB
Body Material: STEEL
Body Ends: SW
Preferred Body Size: 1-1/2"
Guide Location: CAGED
Cooling Fins: NO

Materials:
Plug: HARDENED STAINLESS STEEL
Seat Ring: HARDENED STAINLESS STEEL
Guide Posts: HARDENED STAINLESS STEEL
Bushings:
Stem: STAINLESS STEEL
Packing: TFE - CHEVRON RINGS

VALVE OPERATOR

Type: PNEUMATIC
Signal Range: AS REQ'D
Valve Action:
Flow: OPENS
Spring: CLOSES
Signal Increase: OPENS

Accessories:
Positioner: NO
Limit Switch: NO
Handjack: NO
Stops: NO
Air Lock: NO

PRESSURE CONTROLLER

Type
Adjustable Range
Maximum Pressure
Mounting
Signal Range
Reset or Rate

TEMPERATURE CONTROLLER

Type
Adjustable Range
Maximum Press. and Temp.
Mounting
Capillary Length
Pipe Connection
Reset or Rate

LEVEL CONTROLLER

Type: DISPLACEMENT
Adjustable Range: 14"
Cage Connections: 2" SW
Pressure Class: 150 LB
Signal Range: AS REQ'D
Cooling Fins: NO
Gauge Glasses: NO
Reset or Rate: NO

REMARKS PROVIDE DOUBLE SEAL FOR PRESSURE AND VACUUM

BLACK & VEATCH INTERNATIONAL
CONSULTING ENGINEERS
KANSAS CITY, MO.

PERUSAHAAN UMUM LISTRIK NEGARA
AGENCY OF MINISTRY OF PUBLIC WORKS AND POWER
GOVERNMENT OF REPUBLIC OF INDONESIA
SEMARANG STEAM POWER PLANT
100 (2X50) MW UNITS 1 & 2

CONTROL VALVE SPECIFICATION SHEET

PROJECT 6104

SHEET CV-28

VALVE DESCRIPTION 2FD-9
Flow Diagram 1FD-9 Number Required 2 Valve Tag SSV-201 SSV-101
Service PILOT OIL SAFETY SHUTOFF VALVE

Fluid #2 FUEL OIL Sp Gr .9 Viscosity _____ ssu @ _____ F

VALVE DESIGN

	Design	Low
Flow Rate	3.0 GPM	
Inlet Pressure	210 PSI	
Inlet Temperature	85 F	
Outlet Pressure	209 PSI	
Percent Travel		
Preferred		
Predicted		

Inner Valve Type SINGLE PORT - QUICK OPENING
Maximum Differential Pressure _____ Maximum Temperature _____

VALVE CONSTRUCTION
Body Type GLOBE
Body Pressure Class 600 LB
Body Material STEEL
Body Ends SW
Preferred Body Size 1"
Guide Location CAGED
Cooling Fins NO

Materials:
Plug HARDENED STAINLESS STEEL
Seat Ring HARDENED STAINLESS STEEL
Guide Posts STEEL
Bushings
Stem STAINLESS STEEL
Packing TFE - CHEVRON RING

VALVE OPERATOR
Type DIAPHRAGM
Signal Range
Valve Action:
Flow OPENS
Spring CLOSES
Signal Increase

Accessories:
Positioner NO
Limit Switch YES
Handjack NO
Stops NO
Air Lock NO

PRESSURE CONTROLLER
Type
Adjustable Range
Maximum Pressure
Mounting
Signal Range
Reset or Rate

TEMPERATURE CONTROLLER
Type
Adjustable Range
Maximum Press. and Temp.
Mounting
Capillary Length
Pipe Connection
Reset or Rate

LEVEL CONTROLLER
Type
Adjustable Range
Cage Connections
Pressure Class
Signal Range
Cooling Fins
Gauge Glasses
Reset or Rate

REMARKS REFERENCE SHEET 2F-8 PROVIDE TWO SOLENOID VALVES WITH 250 VOLT DC COILS MOUNTED AND PIPED PER SHEET 2F-8

BLACK & VEATCH INTERNATIONAL
CONSULTING ENGINEERS
KANSAS CITY, MO.

PERUSAHAAN UMUM LISTRIK NEGARA
AGENCY OF MINISTRY OF PUBLIC WORKS AND POWER
GOVERNMENT OF REPUBLIC OF INDONESIA
SEMARANG STEAM POWER PLANT
100 (2X50) MW UNITS 1 & 2

CONTROL VALVE
SPECIFICATION SHEET

PROJECT 6104
SHEET CV-29

P-GN-009-B

VALVE DESCRIPTION 2FD-9 SSV-202

Flow Diagram 1FD-9 Number Required 2 Valve Tag SSV-102

Service FUEL OIL SAFETY SHUTOFF VALVE

Fluid #6 FUEL OIL Sp Gr ____ Viscosity ____ ssu @ ____ F

VALVE DESIGN

	Design	Low
Flow Rate	70 GPM	
Inlet Pressure	350 PSI	
Inlet Temperature	225 F	
Outlet Pressure	345 PSI	
Percent Travel		
Preferred		
Predicted		

Inner Valve Type SINGLE PORT - QUICK OPENING

Maximum Differential Pressure 1000 PSI Maximum Temperature 300 F

VALVE CONSTRUCTION

Body Type GLOBE

Body Pressure Class 600 LB

Body Material STEEL

Body Ends SW

Preferred Body Size 1-1/2"

Guide Location TOP CYLINDER

Cooling Fins

Materials:

Plug STAINLESS STEEL STELLITED

Seat Ring STAINLESS STEEL STELLITED

Guide Posts STAINLESS STEEL

Bushings -

Stem HARDENED STAINLESS STEEL

Packing TFE - CHEVRON RING

VALVE OPERATOR

Type DIAPHRAGM

Signal Range AS REQ'D

Valve Action:

Flow OPENS

Spring CLOSES

Signal Increase

Accessories:

Positioner NO

Limit Switch YES

Handjack NO

Stops NO.

Air Lock NO

PRESSURE CONTROLLER

Type

Adjustable Range

Maximum Pressure

Mounting

Signal Range

Reset or Rate

TEMPERATURE CONTROLLER

Type

Adjustable Range

Maximum Press. and Temp.

Mounting

Capillary Length

Pipe Connection

Reset or Rate

LEVEL CONTROLLER

Type

Adjustable Range

Cage Connections

Pressure Class

Signal Range

Cooling Fins

Gauge Glasses

Reset or Rate

REMARKS REFERENCE SHEET 2F-8 PROVIDE TWO SOLENOID VALVES WITH 250 VOLT DC COILS MOUNTED AND PIPED PER SHEET 2F-8

BLACK & VEATCH INTERNATIONAL
CONSULTING ENGINEERS
KANSAS CITY, MO.

PERUSAHAAN UMUM LISTRIK NEGARA
AGENCY OF MINISTRY OF PUBLIC WORKS AND POWER
GOVERNMENT OF REPUBLIC OF INDONESIA
SEMARANG STEAM POWER PLANT
100 (2X50) MW UNITS 1 & 2

CONTROL VALVE
SPECIFICATION SHEET

PROJECT 6104

SHEET CV-30

DRAWINGS

Title	Drawing Number
Control Panel 1	K1001
Control Panel 2	K1002
Subpanel 1CP-207 Turbine Protection	K1003
Subpanel 2CP-207 Turbine Protection	K1004
Emergency Trip Switches	K1005
Emergency Trip Switches	K1006
Synchronizing Panel	K1007
Flash Evaporator Panel 1	K1008

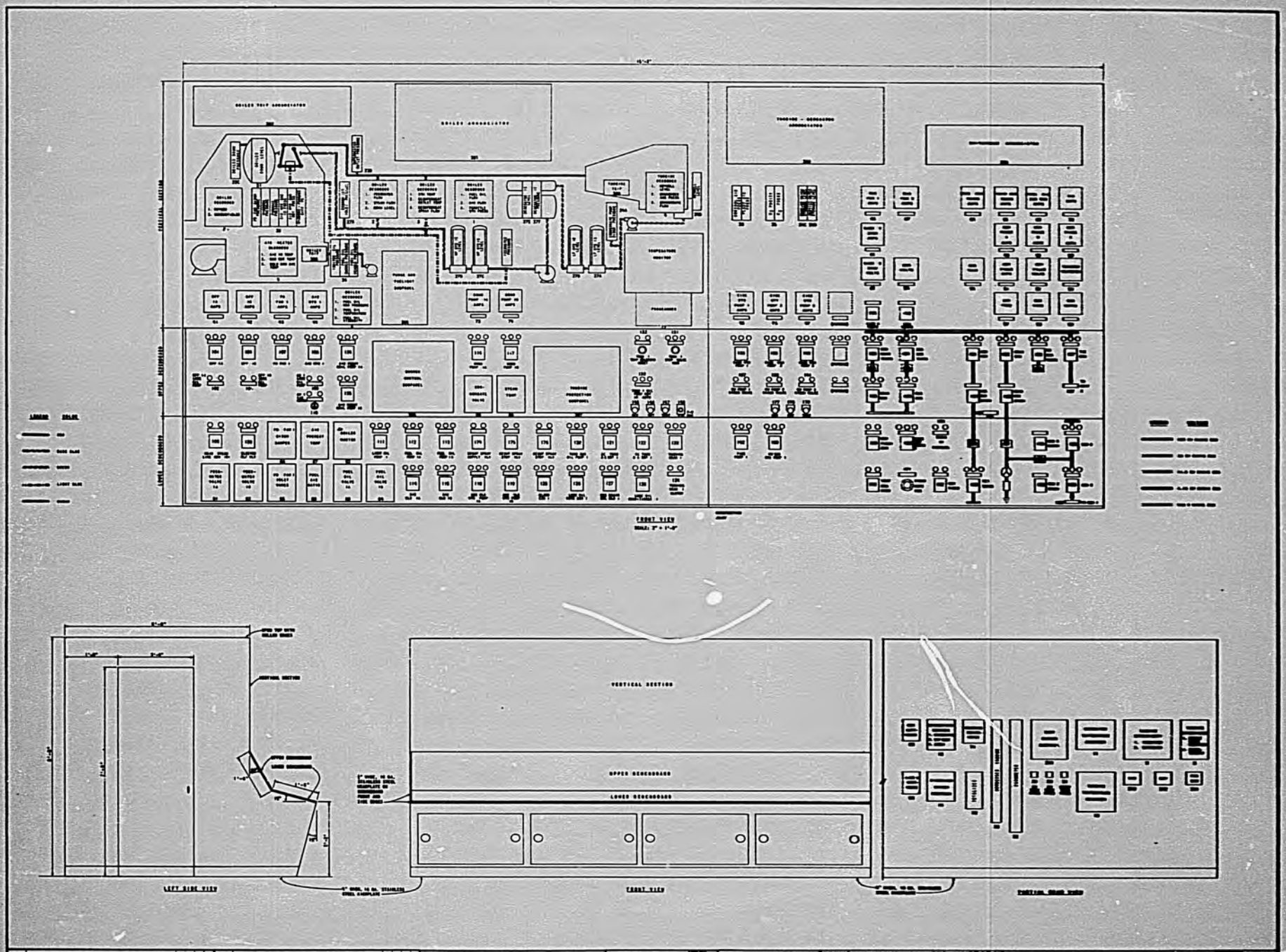
FRONT VIEW
LEFT SIDE VIEW
FRONT VIEW
VERTICAL SECTION
UPPER DECKBOARD
LOWER DECKBOARD
BLACK & VEATCH INTERNATIONAL
PERUSAHAAN UMUM LISTRIK NEGARA
CONTROL PANEL 1

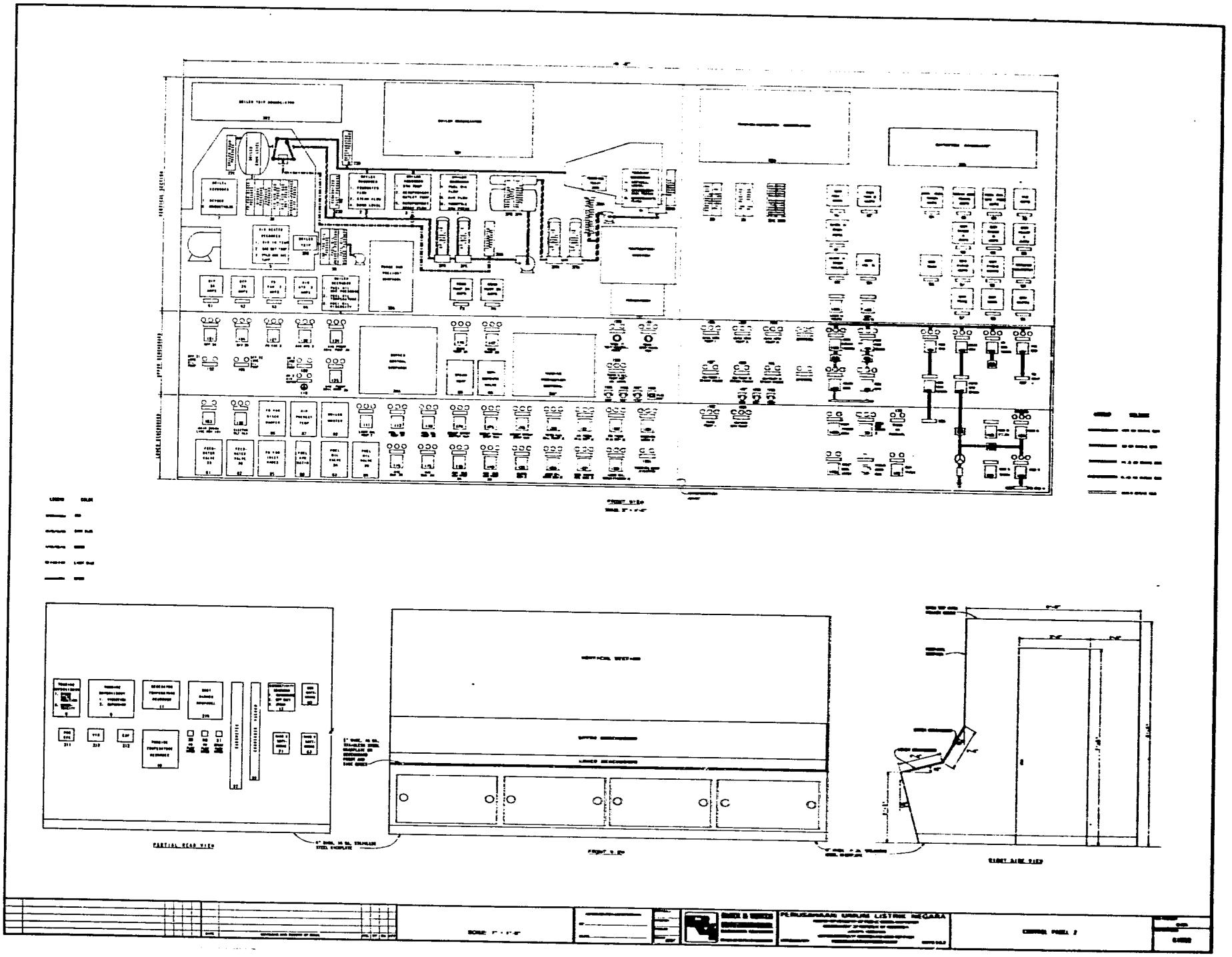
PERUSAHAAN UMUM LISTRIK NEGARA
CONTROL PANEL 2

PERMISSION (A) TO OPEN
TURB. I STOP VALVE OPEN
LP HTR IA LEVEL NOT HIGH
(G) (R)
LP HTR IA EXTRACTION SHUTOFF VALVE
CLOSE OPEN

PERMISSION (A) TO OPEN
TURB. I STOP VALVE OPEN
LP HTR IB LEVEL NOT HIGH
(G) (R)
LP HTR IB EXTRACTION SHUTOFF VALVE
CLOSE OPEN

PERMISSION (A) TO OPEN
TURB I STOP VALVE OPEN
DEAERATOR IC LEVEL NOT HIGH
(G) (R)
DEAERATOR IC EXTRACTION SHUTOFF VALVE
CLOSE OPEN

PERMISSION (A) TO OPEN
TURB I STOP VALVE OPEN
HP HTR ID LEVEL NOT HIGH
(G) (R)
HP HTR ID EXTRACTION SHUTOFF VALVE
CLOSE OPEN

PERMISSION (A) TO OPEN
TURB. I STOP VALVE OPEN
HP HTR IE LEVEL NOT HIGH
(G) (R)
HP HTR IE EXTRACTION SHUTOFF VALVE
CLOSE OPEN

PERMISSION (A) TO CLOSE
EXTR. IA S.O. VLV. OPEN
TURB. I LOAD GREATER THAN 20%
(G) (R)
LP HTR IA EXTRACTION TURBINE SIDE DRAIN VALVE
CLOSE OPEN

PERMISSION (A) TO CLOSE
EXTR. IB S.O. VLV. OPEN
TURB. I LOAD GREATER THAN 20%
(G) (R)
LP HTR IB EXTRACTION TURBINE SIDE DRAIN VALVE
CLOSE OPEN

PERMISSION (A) TO CLOSE
EXTR. IC S.O. VLV. OPEN
TURB. I LOAD GREATER THAN 20%
(G) (R)
DEAERATOR IC EXTRACTION TURBINE SIDE DRAIN VALVE
CLOSE OPEN

PERMISSION (A) TO CLOSE
EXTR. ID S.O. VLV. OPEN
TURB. I LOAD GREATER THAN 20%
(G) (R)
HP HTR ID EXTRACTION TURBINE SIDE DRAIN VALVE
CLOSE OPEN

PERMISSION (A) TO CLOSE
EXTR. IE S.O. VLV. OPEN
TURB. I LOAD GREATER THAN 20%
(G) (R)
HP HTR IE EXTRACTION TURBINE SIDE DRAIN VALVE
CLOSE OPEN

PERMISSION (A) TO CLOSE
EXTR. IC S.O. VLV. OPEN
TURB. I LOAD GREATER THAN 20%
(G) (R)
DEAERATOR IC EXTRACTION HEATER SIDE DRAIN VALVE
CLOSE OPEN

PERMISSION (A) TO CLOSE
EXTR. ID S.O. VLV. OPEN
TURB. I LOAD GREATER THAN 20%
(G) (R)
HP HTR ID EXTRACTION HEATER SIDE DRAIN VALVE
CLOSE OPEN

DATE	REVISIONS AND RECORD OF ISSUE	NO.	BY	CK	APP

DEPT HEAD
DES ENGR
CHECKED
DRAWN K.Y.H.

APPROVED FOR CONSTRUCTION
BY
DATE

BLACK & VEATCH INTERNATIONAL
CONSULTING ENGINEERS
KANSAS CITY, MO.

PERUSAHAAN UMUM LISTRIK NEGARA
AGENCY OF MINISTRY OF PUBLIC WORKS AND POWER
GOVERNMENT OF REPUBLIC OF INDONESIA
SEMARANG STEAM POWER PLANT
100 MW(2x50 MW)

SUBPANEL 1CP-207
TURBINE PROTECTION

B&V PROJECT 6104
B&V DRAWING K1003

PERMISSION (A) TO OPEN
TURB.2 STOP VALVE OPEN
LP HTR 2A LEVEL NOT HIGH
(G) (R)
LP HTR 2A EXTRACTION SHUTOFF VALVE
CLOSE OPEN

PERMISSION (A) TO OPEN
TURB.2 STOP VALVE OPEN
LP HTR 2B LEVEL NOT HIGH
(G) (R)
LP HTR 2B EXTRACTION SHUTOFF VALVE
CLOSE OPEN

PERMISSION (A) TO OPEN
TURB.2 STOP VALVE OPEN
DEAERATOR 2C LEVEL NOT HIGH
(G) (R)
DEAERATOR 2C EXTRACTION SHUTOFF VALVE
CLOSE OPEN

PERMISSION (A) TO OPEN
TURB.2 STOP VALVE OPEN
HP HTR 2D LEVEL NOT HIGH
(G) (R)
HP HTR 2D EXTRACTION SHUTOFF VALVE
CLOSE OPEN

PERMISSION (A) TO OPEN
TURB.2 STOP VALVE OPEN
HP HTR 2E LEVEL NOT HIGH
(G) (R)
HP HTR 2E EXTRACTION SHUTOFF VALVE
CLOSE OPEN

PERMISSION (A) TO CLOSE
EXTR.2A S.O. VLV. OPEN
TURB.2 LOAD GREATER THAN 20%
(G) (R)
LP HTR 2A EXTRACTION TURBINE SIDE DRAIN VALVE
CLOSE OPEN

PERMISSION (A) TO CLOSE
EXTR.2B S.O. VLV. OPEN
TURB.2 LOAD GREATER THAN 20%
(G) (R)
LP HTR 2B EXTRACTION TURBINE SIDE DRAIN VALVE
CLOSE OPEN

PERMISSION (A) TO CLOSE
EXTR.2C S.O. VLV. OPEN
TURB.2 LOAD GREATER THAN 20%
(G) (R)
DEAERATOR 2C EXTRACTION TURBINE SIDE DRAIN VALVE
CLOSE OPEN

PERMISSION (A) TO CLOSE
EXTR.2D S.O. VLV. OPEN
TURB.2 LOAD GREATER THAN 20%
(G) (R)
HP HTR 2D EXTRACTION TURBINE SIDE DRAIN VALVE
CLOSE OPEN

PERMISSION (A) TO CLOSE
EXTR.2E S.O. VLV. OPEN
TURB.2 LOAD GREATER THAN 20%
(G) (R)
HP HTR 2E EXTRACTION TURBINE SIDE DRAIN VALVE
CLOSE OPEN

PERMISSION (A) TO CLOSE
EXTR.2C S.O. VLV. OPEN
TURB.2 LOAD GREATER THAN 20%
(G) (R)
DEAERATOR 2C EXTRACTION HEATER SIDE DRAIN VALVE
CLOSE OPEN

PERMISSION (A) TO CLOSE
EXTR.2D S.O. VLV. OPEN
TURB.2 LOAD GREATER THAN 20%
(G) (R)
HP HTR 2D EXTRACTION HEATER SIDE DRAIN VALVE
CLOSE OPEN

DATE	REVISIONS AND RECORD OF ISSUE	NO.	BY	CK	APP

NOT READ
RCS DWG
CHECKED
TRACED

APPROVED FOR CONSTRUCTION
BY
DATE

BLACK & VEATCH INTERNATIONAL
CONSULTING ENGINEERS
KANSAS CITY, MO.

PERUSAHAAN UMUM LISTRIK NEGARA
AGENCY OF MINISTRY OF PUBLIC WORKS AND POWER
GOVERNMENT OF REPUBLIC OF INDONESIA
SEMARANG STEAM POWER PLANT
300 MEGAWATT
SUBPANEL 2CP-207
TURBINE PROTECTION

DWG NO. 6104
K1004

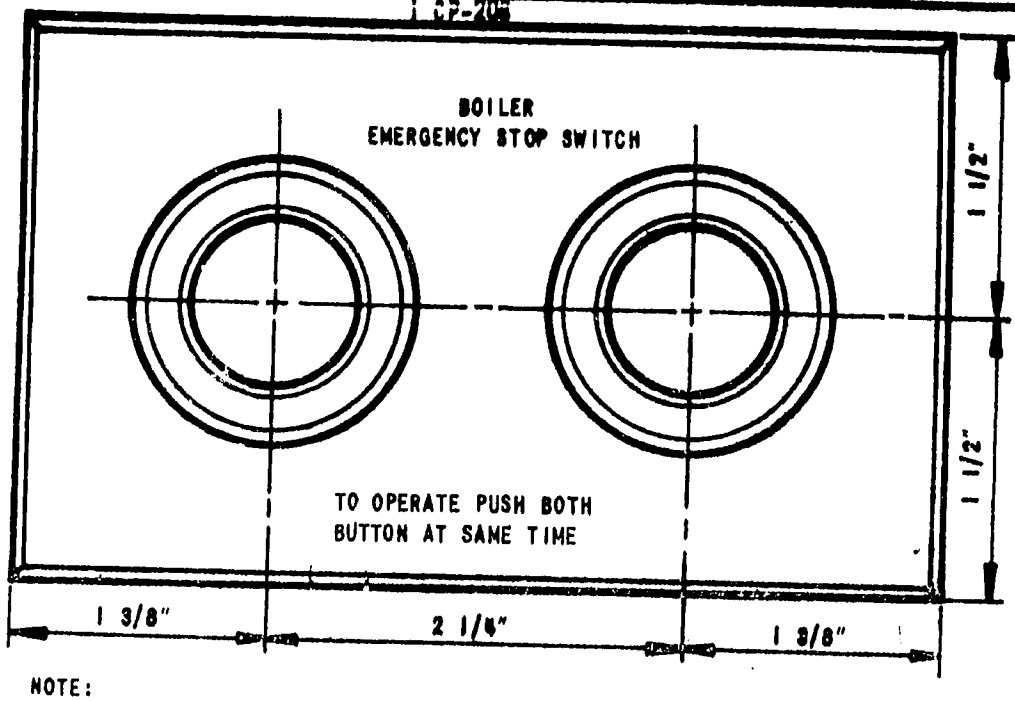

NOTE:
LETTERING - WHITE OR RED BACKGROUND
MATERIAL - 1/16" LAMINATED PHENOLIC
RATING - 250 VOLTS DC 5 AMPS

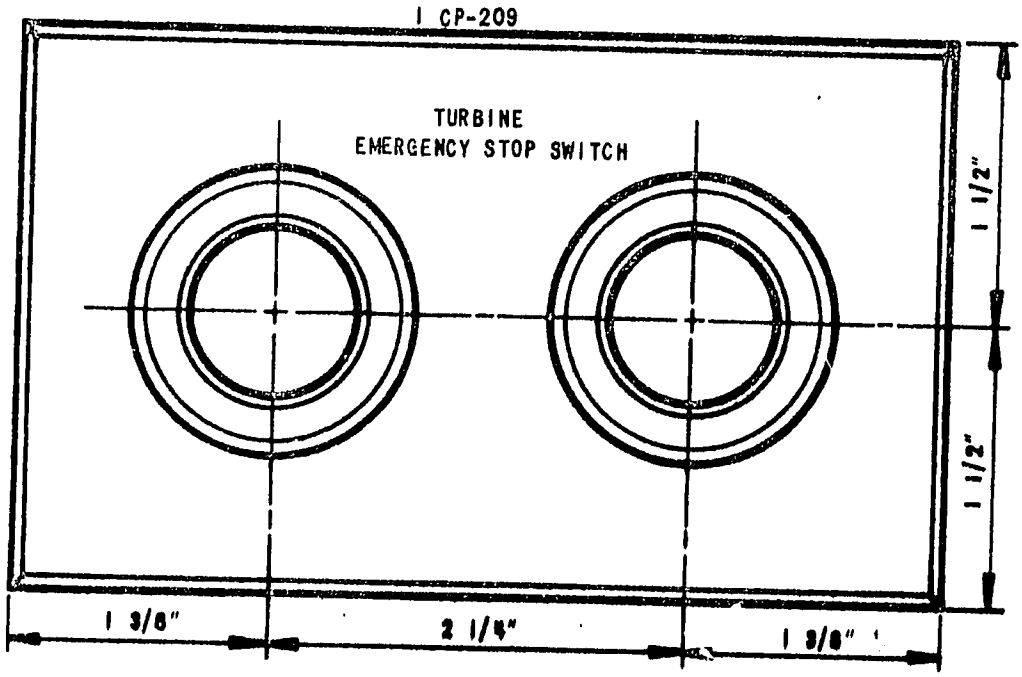

				DATE	REVISION OR ISSUE	NO.	BY

BLACK & VEATCH INTERNATIONAL
CONSULTING ENGINEERS
KANSAS CITY, MO.

PERUSAHAAN UMUM LISTRIK NEGARA
AGENCY OF MINISTRY OF PUBLIC WORKS AND POWER
GOVERNMENT OF REPUBLIC OF INDONESIA
SEMARANG STEAM POWER PLANT
100 (2X50) MW UNITS 1 & 2

EMERGENCY TRIP SWITCHES

PROJECT 6104

SHEET K1005

2 CP-206

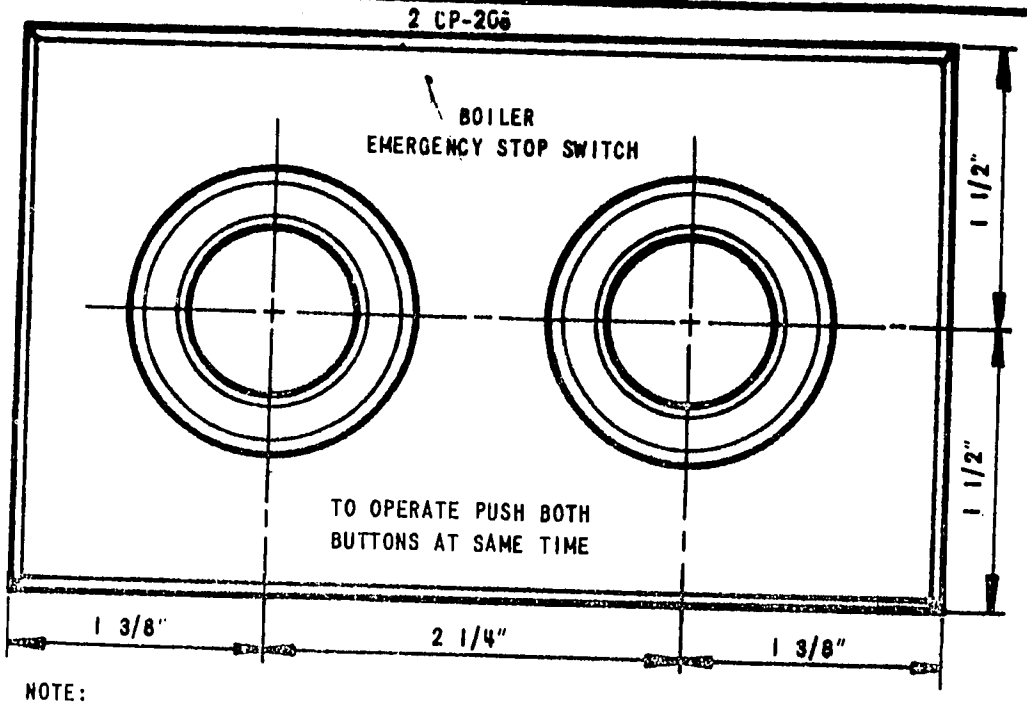

NOTE:
LETTERING - WHITE ON RED BACKGROUND
MATERIAL - 1/16" LAMINATED PHENOLIC
RATING - 250 VOLTS DC 5 AMPS

2 CP-209

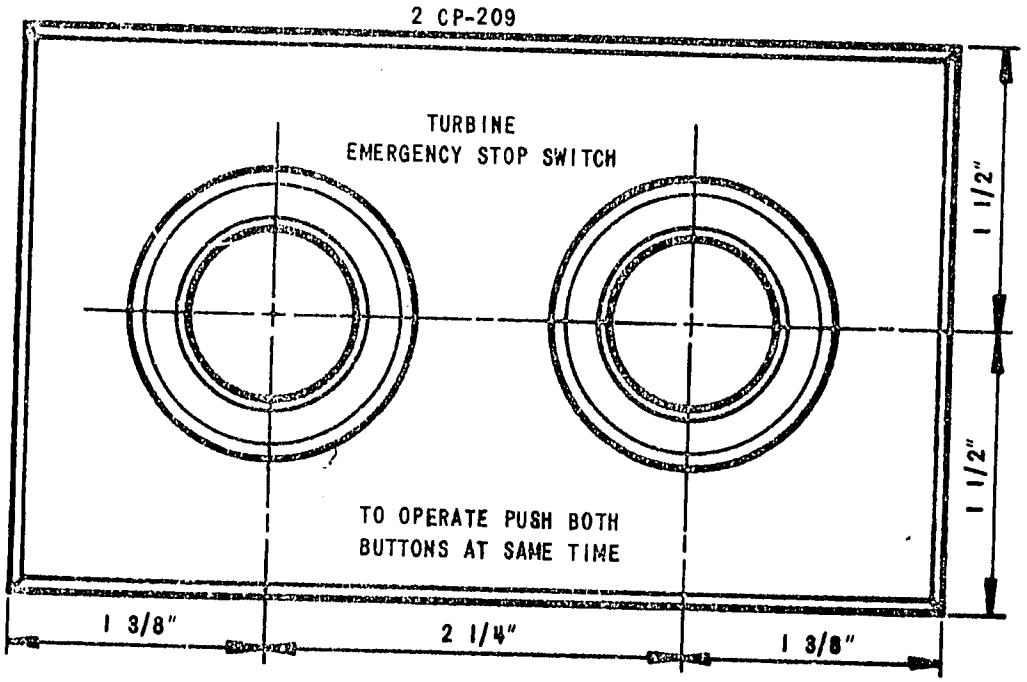

				DATE	REVISION OR ISSUE	NO.	BY

BLACK & VEATCH INTERNATIONAL
CONSULTING ENGINEERS
KANSAS CITY, MO.

PERUSAHAAN UMUM LISTRIK NEGARA
AGENCY OF MINISTRY OF PUBLIC WORKS AND POWER
GOVERNMENT OF REPUBLIC OF INDONESIA
SEMARANG STEAM POWER PLANT
100 (2X50) MW UNITS 1 & 2

EMERGENCY TRIP SWITCHES

PROJECT 6104

SHEET K1006

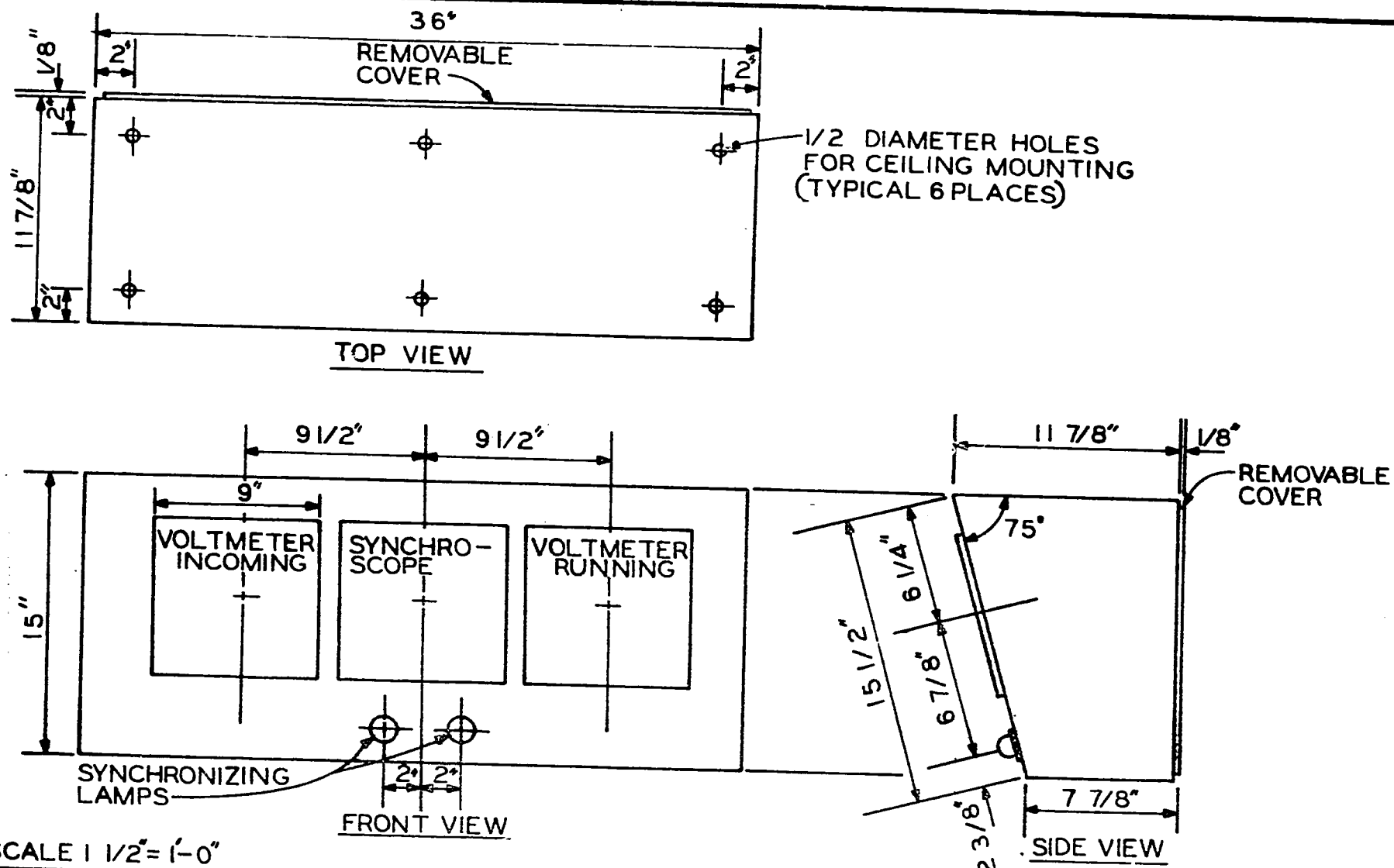

SCALE 1 1/2" = 1'-0"

DATE	REVISION OR ISSUE	NO.	BY

BLACK & VEATCH INTERNATIONAL
CONSULTING ENGINEERS
KANSAS CITY, MO.

PERUSAHAAN UMUM LISTRIK NEGARA
AGENCY OF MINISTRY OF PUBLIC WORKS AND POWER
GOVERNMENT OF REPUBLIC OF INDONESIA
SEMARANG STEAM POWER PLANT
100 (2X50) MW UNITS 1 & 2

SYNCHRONIZING PANEL

PROJECT 6104

SHEET K1007

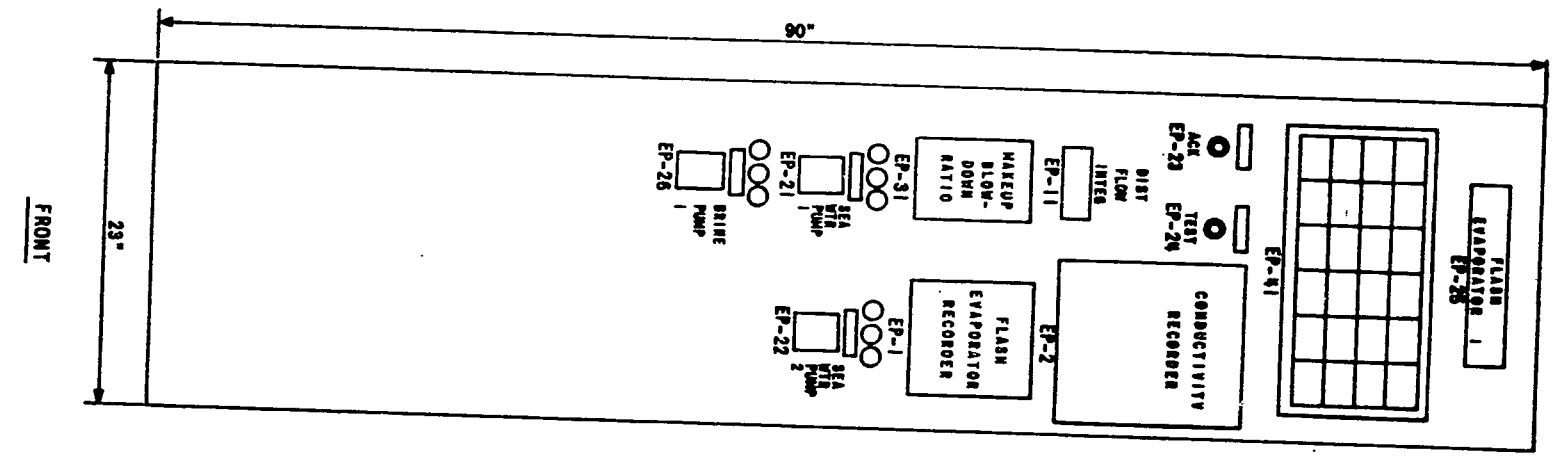

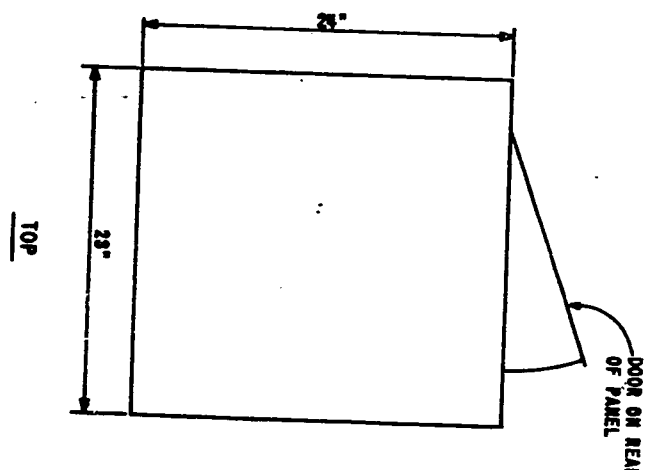

PRELIMINARY

NOT TO BE USED FOR CONSTRUCTION

DATE	REVISION OR ISSUE	NO.	BY	CK	APP

BLACK & VEATCH INTERNATIONAL
CONSULTING ENGINEERS
KANSAS CITY, MO.

PERUSAHAAN UMUM LISTRIK NEGARA
AGENCY OF MINISTRY OF PUBLIC WORKS AND POWER
GOVERNMENT OF REPUBLIC OF INDONESIA
DIBAWANG STEAM POWER PLANT
100 (2250) MW UNITS 1 & 2

FLASH EVAPORATOR PANEL 1

PROJECT 6104

SHEET K1008

APPENDIX

PERUSAHAAN UMUM LISTRIK NEGARA

SEMARANG STEAM POWER PLANT

SPECIFICATIONS AND DOCUMENTS
FOR
CONTROL AND INSTRUMENT EQUIPMENT

SPECIFICATION 6104 - K-2A

ADDENDUM 1
November 14, 1973

Each bidder shall note these revisions to the specifications and documents and incorporate these revisions in his proposal. Each bidder shall attach a signed acknowledged copy of this entire addendum in the front of the specifications and documents submitted with his proposal.

This addendum consists of eight pages and revised Pages C-2, C-3, CV-17, 1EM-4, and 2EM-4.

1. Page A-1. In the third line of the fifth paragraph, change the last word from "disqualification" to "rejection".

2. Page A-1. Add the words "and documents" following the word "specifications" in the first line of the last paragraph.

3. Page A-2. Delete the first paragraph and insert in its place the following revised paragraph:

   "Copies of the specifications and documents obtained in the United States require a deposit of $10.00; those obtained in Indonesia require a deposit of Rp 4,000. Deposits will not be refunded."

4. Page A-2. Add the words "and documents" following the word "specifications" in the second paragraph.

   Add the words "and documents" following the word "specifications" in the second sentence of the fourth paragraph.

5. Page A-2. In the second line of the fifth paragraph, delete the word "within" and substitute the phrase "for a period of".

6. Page A-2. Revise the first sentence of the last paragraph to read:

"The Perusahaan Umum Listrik Negara reserves the right to accept the proposal which, in its judgment, is the lowest responsive proposal submitted by a qualified bidder."

7. Page B-3, Article B.4.1. Revise the second paragraph to read as follows:

"The bidder shall not alter any part of these specifications and documents in any way."

8. Page B-4, Article B.4.3. Change the spelling of the name of the Owner's Director of Construction to read:

"Ir. Bagoes Moedijantoro"

9. Page B-5, Article B.4.4. Delete the second paragraph and insert the following:

"Unless otherwise specified, proposals shall be for the complete scope of the work specified in these specifications and documents. Proposals for individual components of the work will be considered only to the extent such partial scope of supply is specifically stipulated in the INVITATION TO BIDDERS and the PROPOSAL sections included as a part of these specifications and documents."

10. Page B-5, Article B.4.5. In the last line of this article, change the phrase "within 150 days" to read "for a period of 100 days".

11. Page B-5, Article B.6. In the third paragraph, sixth line, change "150 days" to read "100 days".

12. Page B-7, Article B.13. Revise the first sentence in the first paragraph to read:

"The Owner reserves the right to accept the proposal which, in its judgment, is the lowest responsive proposal submitted by a qualified bidder."

13. Page B-8, Article B.15. Delete this article in its entirety and insert the following:

"B.15 EVALUATION. Proposals will be evaluated on the basis of the fas lump sum price bid of equipment and materials as specified.

The delivery dates stipulated in Article 1A.6 must be met by the successful bidder and must be acknowledged in the proposal submitted."

14. Page C-2. Delete entire page and replace with revised Page C-2 attached to this addendum.

15. Page C-3. Delete entire page and replace with revised Page C-3 attached to this addendum.

16. Page GC-3, Article GC.2. Delete Subarticle 15 at top of page in its entirety.

17. Page GC-4, Article GC.7. Delete entire article and replace with the following revised article:

"GC.7 ASSIGNMENT AND SUBCONTRACTING. The Contractor shall not assign or subcontract the work, or any part thereof, without the previous written consent of the Owner, Engineer, and AID, nor shall he assign, by power of attorney or otherwise, any of the money payable under this Contract unless written consent of the Owner has been obtained. No right under this Contract, nor claim for any money due or to become due hereunder shall be asserted against the Owner, or persons acting for the Owner, by reason of any so-called assignment of this Contract or any part thereof, unless such assignment has been authorized by the written consent of the Owner and AID. In case the Contractor is permitted to assign moneys due or to become due under this Contract, the instrument of assignment shall contain a clause subordinating the claim of the assignee to all prior liens for services rendered or materials supplied for the performance of the work.

Should any subcontractor fail to perform in a satisfactory manner the work undertaken by him, his subcontract shall be immediately terminated by the Contractor upon notice from the Owner. The Contractor shall be as fully responsible and accountable to the Owner for the acts and omissions of his subcontractors, and of persons either directly or indirectly employed by them, as he is for the acts and omissions of persons directly employed by him. Nothing contained in this Contract shall create any contractual relation between any subcontractor and the Owner."

18. Page GC-5, Article GC.8. Delete this article in its entirety and substitute the following:

"GC.8 ORAL AND WRITTEN STATEMENTS. It is understood and agreed that the written terms and provisions of this Contract shall supersede all oral and written statements made by either party to this Contract prior to entering into contract. Written statements made by either party prior to entering into contract and oral statements shall not be effective or be construed as being a part of this Contract."

19. Page GC-6, Article GC.11. Delete the first paragraph at the top of this page.

20. Page GC-6, Article GC.12. In the third paragraph, second line, delete the word "perfor" and substitute the word "perform".

21. Page GC-6, Article GC.13. Revise the sixth and seventh lines of this article to read:

"Contractor or any of his property; or if at any time the work under this Contract"

22. Page GC-7, Article GC.16. Delete this article in its entirety and substitute the following revised article:

"GC.16 FORCE MAJEURE. The term force majeure, as used in these contract documents shall mean any cause beyond the control of the Contractor, and which the Contractor could not foresee and/or reasonably provide against and which prevents the Contractor from wholly or partly performing any duties under the contract.

Force majeure shall include, but is not limited to, any of the following:

a. War, revolution, insurrection or hostilities (whether declared or not)

b. Riot, civil commotion or civil uprising (other than among the Contractor's employees)

c. Earthquake, flood, tempest, hurricane, lightning or other natural disaster

d. Any fire of major proportions, or explosion

e. Epidemic

f. Strike, lockout or other industrial disturbance

If there occurs an event constituting force majeure, the Contractor shall give written notice of the occurrence to the Owner within 15 days of the occurrence or as soon thereafter as is practicable, including a statement describing the effect of such occurrence upon the performance of this agreement.

In the event of a force majeure, the Contractor unless otherwise directed by the Owner in writing shall continue to undertake and perform the duties included in this Contract as far as is reasonably practicable. If prevented from so performing by such cause, the performance may be suspended during the continuance of such inability but for no longer period and such inability shall be removed if practicable with all reasonable dispatch.

In the event of a force majeure resulting in a suspension of work this Contract shall be extended by a period equal to that for which the Contractor was prevented from performing.

If such event lasts for more than 45 days after notice has been given to the Owner in writing, either party to this Contract may terminate this Contract and the Contractor shall thereupon be entitled to any sums which would be payable pursuant to the termination provision of this Contract."

23. Page GC-8, Article GC.17. In the sixth line of this article, delete the phrase "interest on investment".

24. Page GC-9, Article GC.19.1. In the third line of the second paragraph, delete the word "either".

In the fourth line of the second paragraph, delete the words "an action in court".

In the second and third paragraphs, wherever the phrase "Owner or Engineer" appears, change the phrase to "Owner and Engineer". (5 places)

25. Page GC-12, Article GC.23. Delete the last sentence of the first paragraph.

26. Page GC-13, Article GC.25. Add the following sentence to the first paragraph:

"Labor costs involved in carrying out such work shall be borne by the Contractor."

27. Page GC-22, Article GC.32.3. In the first paragraph, delete the phrase "except as provided for under the AID Capital Projects Guidelines M.O. 1442.2 and M.O. 1442.3".

Delete the third paragraph in this article.

28. Page GC-24, Article GC.33. Revise the first sentence in this article to read:

"Unless otherwise specified the Contractor shall begin the work under this Contract within 10 days after receipt of a notice to proceed from the Owner to be followed by the establishment of an irrevocable Letter of Credit in a mutually acceptable USA bank for the USA Dollar value of this Contract."

29. Page GC-30, Article GC.44. In the next to last paragraph on this page, insert the words "Contractor and the" between the words "The expatriate" in the first line.

In the ninth line of the next to last paragraph on this page, insert the words "Contractor and its" between the words "The expatriate".

30. Page GC-31, Article GC.49.1. Revise "South Yemen" to read "Yemen (Adan)".

31. Page 1A-2, Article 1A.6. Change the second line of the first paragraph to read:

"of the equipment and materials to assure delivery at the end of ships tackle at the Port of Semarang"

32. Page 1B-5, Article 1B.15. Revise the last line of this article to read as follows:

"paragraphs and at a range of ambient temperatures up to 50 C."

33. Page 1B-8, Article 1B.25. Delete the second paragraph on this page and insert the following revised paragraph:

"Unless otherwise specified, all pressure and temperature instruments shall have metric scales. Scales shall be in kilograms per square centimeter for pressure instruments and in degrees centigrade for temperature instruments."

34. Page 1C-3, Article 1C.4.2. Under item "a. Preliminary issue within 60 days and certified issue within 120 days:", add the following item:

"Instrument data sheets for all panel mounted devices, local transmitters, control drives, analyzers, control valves, flow elements, and temperature detectors"

35. Page 2B-1, Article 2B.3.2. In the first paragraph delete the second sentence which begins: "Selector stations shall be..".

36. Page 2C-8, Article 2C.4.4. Change last sentence to read: "Integrators shall be Foxboro, or acceptable equal."

37. Page 2C-9, Article 2C.5. Change first paragraph to read:

"The recorder shall be provided with all required plug-in type cables and input relay racks. A total length of twenty-five feet of cable shall be furnished to interconnect the monitor and its associated input relay racks."

38. Page 2C-9, Article 2C.5. Change next to last paragraph to read:

"24 - Alarm modules for continuous monitoring and alarm of preselected temperatures. The alarm modules shall be as specified in Article 1B.25.3. The alarm modules shall be located adjacent to the temperature monitor input relay racks."

39. Page 2C-12, Article 2C.9. Add to the end of the last sentence "..all mounted and piped within the Main Control Panel."

40. Page 2D-4, Article 2D.5. Delete the phrase "current ratio will be furnished later." in the last two lines and add the following: "Watthour meter shall be primary reading with 5 dial registers. Current transformer ratios, potential transformer ratios, and dial multipliers will be furnished later."

41. Page 1EM-4. Delete entire page and replace with revised Page 1EM-4 attached to this addendum. (NOTE: the new items shall be mounted and wired on the rear of the panel.)

42. Page 2EM-4. Delete entire page and replace with revised Page 2EM-4 attached to this addendum. (NOTE: the new items shall be mounted and wired on the rear of the panel.)

43. Page CV-17. Delete entire page and replace with revised Page CV-17 attached to this addendum.

44. Page CV-24. On the specification sheet for control valves CRV-123 and 223, under Accessories, Positioner change "YES" to "NO" and under REMARKS, add the statement:

"Level controllers shall be differential gap type with a 12 inch permissible gap adjustment."

45. Page CV-25. On the specification sheet for control valves CRV-124 and CRV-224, under Valve Construction, Body Ends delete "BW SCH 40" and substitute "150# FLGD".

46. Page CV-26. On the specification sheet for control valves CRV-125 and CRV-225, under Valve Construction, Body Ends delete "BW SCH 40" and substitute "150# FLGD".

BLACK & VEATCH INTERNATIONAL
Consulting Engineers

* * * * * * * * * * * * * *

ACKNOWLEDGMENT

The undersigned bidder hereby certifies that the revisions set forth in this addendum have been incorporated in his bid and are a part of the specifications and documents.

Signed _____

_____

Date _____

C.2 **FREIGHT**

Estimated lump sum price of ocean freight including port charges for handling, loading, and unloading onto barge; insurance; and port surcharge for shipping all equipment and materials furnished under C.1 above from USA port to Port of Semarang, Indonesia:

_____

_____ Dollars ($ USA)
(Price in Words)

C.3 MANUFACTURER'S FIELD SERVICES

If required by the Owner, manufacturer's technical field services specified in Section 1A will be furnished at the following rates.

C.3.1 Representative's Daily Service Rate

Service rate for each technical field representative exclusive of living costs, expenses and transportation, and on the basis of six 8-hour days per week on the site:

_____

_____ Dollars ($ USA)
(Price in Words)

C.3.2 Overtime Rate

Service representative's time in excess of 48 hours per week will be provided at the following hourly rate:

_____

_____ Dollars ($ USA)
(Price in Words)

C.3.3 Expenses

Living costs and other expenses incurred in Indonesia will be invoiced at cost but will not exceed the following per diem:

_____

_____ Rupiahs (Rp IND)
(Price in Words)

C.3.4 **Transportation**

Estimated cost per round trip from the bidder's office to Semarang, Central Java, Indonesia and return, including living costs and other expenses incidental to travel, but excluding per diem salary cost:

_____

_____ Dollars ($ USA)
(Price in Words)

and

_____

_____ Rupiahs (Rp IND)
(Price in Words)

The rupiah to dollars conversion rate is 415 Indonesian Rupiahs per USA Dollar.

The undersigned hereby declares that only the persons or firms interested in the Proposal as principal or principals are named herein, and that no other person or firms than herein mentioned have any interest in this Proposal or in the contract to be entered into; that this Proposal is made without connection with any other person, company, or parties likewise submitting a proposal; and that it is in all respects for and in good faith, without collusion or fraud.

If this Proposal is accepted, the undersigned bidder agrees to submit engineering data, provide services, and complete delivery of the equipment and materials in accordance with the schedules stipulated in the specifications. The undersigned fully understands that adherence to the schedules stipulated is of the essence of the contract.

If this Proposal is accepted, the undersigned hereby agrees to enter into a contract on the attached forms within 45 calendar days from the date of notice by the Owner of award of contract and to furnish a Performance Bond satisfactory to the Owner.

Dated at _____ this ____ day of _____, 19__.

Bidder _____

By _____

Title _____

Business Address of Bidder _____

_____

State of Incorporation _____

Address of Principal Office _____

_____

VALVE DESCRIPTION 2FD-5
Flow Diagram 1FD-5 Number Required 4 Valve Tag CRV-113, CRV-212, CRV-112, CRV-213
Service BOILER FEEDWATER REGULATOR

Fluid CONDENSATE Sp Gr ____ Viscosity ____ ssu @ ____ F

VALVE DESIGN

	Design	Low
Flow Rate	525,000 #/HR	110,000 #/HR
Inlet Pressure	1680 PSI	2010 PSI
Inlet Temperature	329 F	230 F
Outlet Pressure	1620 PSI	1280 PSI
Percent Travel -		
Preferred	90%	
Predicted		

Inner Valve Type SINGLE PORT BALANCED - EQUAL PERCENTAGE
Maximum Differential Pressure 2225 Maximum Temperature 340 F

VALVE CONSTRUCTION

Body Type GLOBE
Body Pressure Class 1500 LB
Body Material STEEL
Body Ends BW SCH 120
Preferred Body Size 6" (SEE REMARKS)
Guide Location CAGED
Cooling Fins NO

Materials:
Plug STELLITE
Seat Ring STELLITE
Guide Posts STELLITE
Bushings
Stem STAINLESS STEEL
Packing TFE - CHEVRON RINGS

VALVE OPERATOR

Type PISTON OR DIAPHRAGM
Signal Range AS REQ'D
Valve Action:
Flow OPENS
Spring CLOSES
Signal Increase

Accessories:
Positioner YES
Limit Switch NO
Handjack YES
Stops NO
Air Lock NO

PRESSURE CONTROLLER
Type
Adjustable Range
Maximum Pressure
Mounting
Signal Range
Reset or Rate

TEMPERATURE CONTROLLER
Type
Adjustable Range
Maximum Press. and Temp.
Mounting
Capillary Length
Pipe Connection
Reset or Rate

LEVEL CONTROLLER
Type
Adjustable Range
Cage Connections
Pressure Class
Signal Range
Cooling Fins
Gauge Glasses
Reset or Rate

REMARKS RECEIVES SIGNAL FROM FEEDWATER CONTROL SYSTEM.
VALVE ENDS SHALL BE 6 INCH TO MATE WITH 6 INCH SCH 120 PIPE.

BLACK & VEATCH INTERNATIONAL
CONSULTING ENGINEERS
KANSAS CITY, MO.

PERUSAHAAN UMUM LISTRIK NEGARA
AGENCY OF MINISTRY OF PUBLIC WORKS AND POWER
GOVERNMENT OF REPUBLIC OF INDONESIA
SEMARANG STEAM POWER PLANT
100 (2X50) MW UNITS 1 & 2

CONTROL VALVE
SPECIFICATION SHEET

PROJECT 6104
SHEET CV-17

REVISION 1

P-GN-009-B

ITEM NO. 1CP-	DESCRIPTION	NAME PLATE	MANUFACTURER TYPE MODEL	INPUT SIGNAL RANGE / SCALE RANGE	SIGNAL CONVERTER TAG NO.	REMARKS	PURCHASE SPEC NUMBER
71	PRINTING DEMAND METER	YES	GE PD-57F	LATER			K-2A
72	TOTALIZER	YES	GE SST-3	LATER			K-2A
73	CONDENSATE PUMP 1A	YES		LATER			K-2A
74	CONDENSATE PUMP 1B	YES		LATER			K-2A
75	4160 VOLT SWGR WATTS (MAIN)	YES		LATER			K-2A
76	4160 VOLT SWGR WATTS (RES)	YES		LATER			K-2A
77	4160 VOLT SWGR WATTHOURS (MAIN)	YES		LATER			K-2A

DATE	REVISION OR ISSUE	NO.	BY
11/12/73	ADDENDUM 1	1	[illegible]

BLACK & VEATCH INTERNATIONAL
CONSULTING ENGINEERS
KANSAS CITY, MO.

PERUSAHAAN UMUM LISTRIK NEGARA
AGENCY OF MINISTRY OF PUBLIC WORKS AND POWER
GOVERNMENT OF REPUBLIC OF INDONESIA
SEMARANG STEAM POWER PLANT
100 (2X50) MW UNITS 1 & 2

INSTRUMENT LIST
ELECTRIC METERS

PROJECT 6104

SHEET 1EM-4

ITEM NO. 2CP-	DESCRIPTION	NAME PLATE	MANUFACTURER TYPE MODEL	INPUT SIGNAL RANGE / SCALE RANGE	SIGNAL CONVERTER TAG NO.	REMARKS	PURCHASE SPEC NUMBER
71	NOT USED						
72	NOT USED						
73	CONDENSATE PUMP 2A	YES		LATER			K-2A
74	CONDENSATE PUMP 2B	YES		LATER			K-2A
75	4160 VOLT SWGR WATTS (MAIN)	YES		LATER			K-2A
76	4160 VOLT SWGR WATTS (RES)	YES		LATER			K-2A
77	4160 VOLT SWGR WATTHOURS (MAIN)	YES		LATER			K-2A

DATE	REVISION OR ISSUE	NO.	BY
4/12/83	ADDENDUM 1	1	[illegible]

BLACK & VEATCH INTERNATIONAL
CONSULTING ENGINEERS
KANSAS CITY, MO.

PERUSAHAAN UMUM LISTRIK NEGARA
AGENCY OF MINISTRY OF PUBLIC WORKS AND POWER
GOVERNMENT OF REPUBLIC OF INDONESIA
SEMARANG STEAM POWER PLANT
100 (2X50) MW UNITS 1 & 2

INSTRUMENT LIST
ELECTRIC METERS

PROJECT 6104

SHEET 2EM-4

PERUSAHAAN UMUM LISTRIK NEGARA

SEMARANG STEAM POWER PLANT

SPECIFICATIONS AND DOCUMENTS
FOR
CONTROL AND INSTRUMENT EQUIPMENT

SPECIFICATION K-2A

ADDENDUM 2
November 26, 1973

Each bidder shall note these revisions to the contract documents and incorporate these revisions in his proposal. Each bidder shall attach a signed acknowledged copy of this entire addendum in the front of the specifications submitted with his proposal.

This addendum consists of one page and revised Pages CV-9, CV-11, CV-13, and CV-15.

1. Page A-1. Change the closing date for receipt of proposals indicated in the fifth line of the first paragraph from "December 6, 1973" to "December 20, 1973".

2. Page CV-9. Delete entire page and replace with revised Page CV-9 attached to this addendum.

3. Page CV-11. Delete entire page and replace with revised Page CV-11, attached to this addendum.

4. Page CV-13. Delete entire page and replace with revised Page CV-13 attached to this addendum.

5. Page CV-15. Delete entire page and replace with revised Page CV-15 attached to this addendum.

BLACK & VEATCH INTERNATIONAL
Consulting Engineers

* * * * * * * * * * * * * * * *

ACKNOWLEDGMENT

The undersigned bidder hereby certifies that the revisions set forth in this addendum have been incorporated in his bid and are a part of the contract documents.

Signed_____

_____

Date_____

(PLN - 6104)
(CONTROL AND INSTRUMENT EQUIPMENT - K-2A)
(ADDENDUM 2)
112673

VALVE DESCRIPTION 2FD-4 CRV-204
Flow Diagram 1FD-4 Number Required 2 Valve Tag CRV-104
Service HP HEATERS 1E & 2E TO DEAERATORS 1C & 2C

Fluid FLASHING CONDENSATE Sp Gr ____ Viscosity ____ ssu @ ____ F

VALVE DESIGN

	Design	Low
Flow Rate	36,000 #/HR	5300
Inlet Pressure	411 PSIA	74 PSIA
Inlet Temperature	387 F	281 F
Outlet Pressure	94 PSIA	22 PSIA
Percent Travel -		
Preferred	75	
Predicted		

Inner Valve Type SINGLE PORT - EQUAL PERCENTAGE
Maximum Differential Pressure 400 PSI Maximum Temperature 415 F

VALVE CONSTRUCTION

Body Type GLOBE
Body Pressure Class 600 LB
Body Material 5% CR STEEL
Body End SW
Preferred Body Size 1-1/2"
Guide Location CAGED
Cooling Fins

Materials:

Plug HARDENED STAINLESS STEEL
Seat Ring HARDENED STAINLESS STEEL
Guide Posts HARDENED STAINLESS STEEL
Bushings
Stem STAINLESS STEEL
Packing TFE - CHEVRON RING

VALVE OPERATOR

Type DIAPHRAGM
Signal Range AS REQ'D
Valve Action:
Flow OPENS
Spring CLOSES
Signal Increase OPENS

Accessories:

Positioner YES
Limit Switch YES - ONE DPDT
Handjack YES
Stops NO
Air Lock NO

PRESSURE CONTROLLER

Type
Adjustable Range
Maximum Pressure
Mounting
Signal Range
Reset or Rate

TEMPERATURE CONTROLLER

Type
Adjustable Range
Maximum Press. and Temp.
Mounting
Capillary Length
Pipe Connection
Reset or Rate

LEVEL TRANSMITTER DISPLACEMENT

Type
Adjustable Range 72"
Cage Connections 2" SW
Pressure Class 300 LB
Signal Range AS REQ'D
Cooling Fins NO
Gauge Glasses NO
Reset or Rate

REMARKS — FURNISH FISHER (OR EQUAL) LEVEL-TROL EXTERNAL CAGE TRANSMITTER AND VALVE MOUNTED RECEIVER CONTROLLER, PROPORTIONAL ~~PLUS RESET.~~ ~~TAG TRANSMITTER 1LT-1 (CRV-104) AND 2LT-1 (CRV-204)~~

P-GN-009-B

1

BLACK & VEATCH INTERNATIONAL
CONSULTING ENGINEERS
KANSAS CITY, MO.

PERUSAHAAN UMUM LISTRIK NEGARA
AGENCY OF MINISTRY OF PUBLIC WORKS AND POWER
GOVERNMENT OF REPUBLIC OF INDONESIA
SEMARANG STEAM POWER PLANT
100 (2X50) MW UNITS 1 & 2

CONTROL VALVE
SPECIFICATION SHEET

PROJECT 6104
SHEET CV-9

REVISION - 1
ADDENDUM - 2

VALVE DESCRIPTION 2FD-4 CRV-206
Flow Diagram 1FD-4 Number Required 2 Valve Tag CRV-106
Service HP HEATER 1D & 2D TO LP HEATER 1B & 2B

Fluid FLASHING CONDENSATE Sp Gr ____ Viscosity ____ ssu @ ____ F

VALVE DESIGN

	Design	Low
Flow Rate	10,000 #/HR	57,000 #/HR
Inlet Pressure	46.0 PSIA	185.0 PSIA
Inlet Temperature	246 F	330 F
Outlet Pressure	10 PSIA	45 PSIA
Percent Travel		
Preferred		
Predicted	60	85

Inner Valve Type SINGLE PORT - EQUAL PERCENTAGE RESTRICTED
Maximum Differential Pressure 185 PSI Maximum Temperature 350 F

VALVE CONSTRUCTION

Body Type GLOBE
Body Pressure Class 600 LB
Body Material 5% CHROME
Body Ends SW
Preferred Body Size 2"
Guide Location CAGED
Cooling Fins NO

Materials:
Plug HARDENED STAINLESS STEEL
Seat Ring HARDENED STAINLESS STEEL
Guide Posts HARDENED STAINLESS STEEL
Bushings
Stem STAINLESS STEEL
Packing TFE - CHEVRON RING

VALVE OPERATOR

Type DIAPHRAGM
Signal Range AS REQ'D
Valve Action:
Flow OPENS
Spring CLOSES
Signal Increase OPENS

Accessories:
Positioner YES
Limit Switch YES - ONE DPDT
Handjack YES
Stops NO
Air Lock NO

PRESSURE CONTROLLER
Type
Adjustable Range
Maximum Pressure
Mounting
Signal Range
Reset or Rate

TEMPERATURE CONTROLLER
Type
Adjustable Range
Maximum Press. and Temp.
Mounting
Capillary Length
Pipe Connection
Reset or Rate

LEVEL TRANSMITTER
Type DISPLACEMENT
Adjustable Range 72"
Cage Connections 2" SW
Pressure Class 300 LB
Signal Range AS REQ'D
Cooling Fins NO
Gauge Glasses NO
Reset or Rate –

REMARKS FURNISH FISHER (OR EQUAL) LEVEL-TROL EXTERNAL CAGE TRANSMITTER AND VALVE MOUNTED RECEIVER CONTROLLER, PROPORTIONAL PLUS RESET. TAG TRANSMITTER 1LT-2 (CRV-106) AND 2LT-2 (CRV-206).

2

P-GN-009-8

BLACK & VEATCH INTERNATIONAL
CONSULTING ENGINEERS
KANSAS CITY, MO.

PERUSAHAAN UMUM LISTRIK NEGARA
AGENCY OF MINISTRY OF PUBLIC WORKS AND POWER
GOVERNMENT OF REPUBLIC OF INDONESIA
SEMARANG STEAM POWER PLANT
100 (2X50) MW UNIT 3 & 2

CONTROL VALVE SPECIFICATION SHEET

PROJECT 6104
SHEET CV-11

REVISION - 1
ADDENDUM - 2

VALVE DESCRIPTION 2FD-4
Flow Diagram 1FD-4 Number Required 2 Valve Tag CRV-208 CRV-108
Service LP HEATER 1B & 2B TO CONDENSER 1 & 2

Fluid FLASHING CONDENSATE Sp Gr ____ Viscosity ____ ssu @ ____ F

VALVE DESIGN

	Design	Low
Flow Rate	25,000 #/HR	13,600 #/HR
Inlet Pressure	31.0 PSIA	5.5 PSIA
Inlet Temperature	196 F	138 F
Outlet Pressure	11.0 PSIA	3.0 PSIA
Percent Travel -		
Preferred	75	
Predicted		

Inner Valve Type SINGLE PORT - EQUAL PERCENTAGE
Maximum Differential Pressure 43 PSIA Maximum Temperature 225 F

VALVE CONSTRUCTION

Body Type GLOBE
Body Pressure Class 600 LB
Body Material 5% CHROME
Body Ends SW
Preferred Body Size 1-1/2"
Guide Location CAGED
Cooling Fins NO

Materials:
Plug HARDENED STAINLESS STEEL
Seat Ring HARDENED STAINLESS STEEL
Guide Post HARDENED STAINLESS STEEL
Bushings
Stem STAINLESS STEEL
Packing TFE - CHEVRON RING

VALVE OPERATOR

Type DIAPHRAGM
Signal Range AS REQ'D
Valve Action:
Flow OPENS
Spring CLOSES
Signal Increase OPENS

Accessories:
Positioner YES
Limit Switch YES - ONE DPDT
Handjack YES
Stops NO
Air Lock NO

PRESSURE CONTROLLER

Type
Adjustable Range
Maximum Pressure
Mounting
Signal Range
Reset or Rate

TEMPERATURE CONTROLLER

Type
Adjustable Range
Maximum Press. and Temp.
Mounting
Capillary Length
Pipe Connection
Reset or Rate

LEVEL TRANSMITTER

Type DISPLACEMENT
Adjustable Range 72"
Cage Connections 2" SW
Pressure Class 300 LB
Signal Range AS REQ'D
Cooling Fins NO
Gauge Glasses NO
Reset or Rate —

REMARKS FURNISH FISHER (OR EQUAL) LEVEL-TROL EXTERNAL CAGE TRANSMITTER AND VALVE MOUNTED RECEIVER CONTROLLER, PROPORTIONAL PLUS RESET. TAG TRANSMITTER 1LT-3 (CRV-108) AND 2LT-3 (CRV-208). PROVIDE DOUBLE SEAL PACKING FOR PRESSURE AND VACUUM.

BLACK & VEATCH INTERNATIONAL
CONSULTING ENGINEERS
KANSAS CITY, MO.

PERUSAHAAN UMUM LISTRIK NEGARA
AGENCY OF MINISTRY OF PUBLIC WORKS AND POWER
GOVERNMENT OF REPUBLIC OF INDONESIA
SEMARANG STEAM POWER PLANT
100 (2X50) MW UNITS 1 & 2

COMTROL VALVE
SPECIFICATION SHEET

PROJECT 6104
SHEET CV-13

REVISION - 1
ADDENDUM - 2

P-GN-009-B

VALVE DESCRIPTION 2FD-4 / 1FD-4 — CRV-210 / CRV-110

Flow Diagram: 2FD-4 / 1FD-4 — Number Required: 2 — Valve Tag: CRV-210 / CRV-110

Service: LP HEATER 1A & 2A TO CONDENSER 1 & 2

Fluid: FLASHING CONDENSATE — Sp Gr ____ Viscosity ____ ssu @ ____ F

VALVE DESIGN

	Design	Low
Flow Rate	49,200 #/HR	15,400 #/HR
Inlet Pressure	11 PSIA	2.75 PSIA
Inlet Temperature	196 F	138 F
Outlet Pressure	5.0 PSIA	1.5 PSIA
Percent Travel		
Preferred	75	
Predicted		

Inner Valve Type: ____

Maximum Differential Pressure: 15 PSI — Maximum Temperature: 212 F

VALVE CONSTRUCTION

Body Type: GLOBE
Body Pressure Class: 150 LB
Body Material: 5% CHROME
Body Ends: BW (SEE REMARKS)
Preferred Body Size: 4"
Guide Location: CAGED
Cooling Fins: NO

Materials:
Plug: HARDENED STAINLESS STEEL
Seat Ring: HARDENED STAINLESS STEEL
Guide Posts: HARDENED STAINLESS STEEL
Bushings: ____
Stem: STAINLESS STEEL
Packing: TFE - CHEVRON RING

VALVE OPERATOR

Type: DIAPHRAGM
Signal Range: AS REQ'D
Valve Action:
Flow: OPENS
Spring: CLOSES
Signal Increase: OPENS

Accessories:
Positioner: YES
Limit Switch: YES - ONE DPDT
Handjack: YES
Stops: NO
Air Lock: NO

PRESSURE CONTROLLER

Type: ____
Adjustable Range: ____
Maximum Pressure: ____
Mounting: ____
Signal Range: ____
Reset or Rate: ____

TEMPERATURE CONTROLLER

Type: ____
Adjustable Range: ____
Maximum Press. and Temp.: ____
Mounting: ____
Capillary Length: ____
Pipe Connection: ____
Reset or Rate: ____

LEVEL TRANSMITTER

Type: DISPLACEMENT
Adjustable Range: 0-72"
Cage Connections: 2" SW
Pressure Class: 150 LB
Signal Range: AS REQ'D
Cooling Fins: NO
Gauge Glasses: NO
Reset or Rate: ____

REMARKS: FURNISH FISHER (OR EQUAL) LEVEL-TROL EXTERNAL CAGE TRANSMITTER AND VALVE MOUNTED RECEIVER CONTROLLER, PROPORTIONAL PLUS RESET. TAG TRANSMITTER 1LT-4 (CRV-110) AND 2LT-4 (CRV-210)

SCH 40 INLET: SCH 80 OUTLET

P-GN-009-8

BLACK & VEATCH INTERNATIONAL
CONSULTING ENGINEERS
KANSAS CITY, MO.

PERUSAHAAN UMUM LISTRIK NEGARA
AGENCY OF MINISTRY OF PUBLIC WORKS AND POWER
GOVERNMENT OF REPUBLIC OF INDONESIA
SEMARANG STEAM POWER PLANT
100 (2X50) MW — UNITS 1 & 2

CONTROL VALVE SPECIFICATION SHEET

PROJECT 6104

SHEET CV-15

REVISION - 1
ADDENDUM - 2

PERUSAHAAN UMUM LISTRIK NEGARA

SEMARANG STEAM POWER PLANT

SPECIFICATIONS AND DOCUMENTS
FOR
CONTROL AND INSTRUMENT EQUIPMENT

SPECIFICATION K-2A

ADDENDUM 3
December 18, 1973

Each bidder shall note these revisions to the contract documents and incorporate these revisions in his proposal. Each bidder shall attach a signed acknowledged copy of this entire addendum in the front of the specifications submitted with his proposal.

This addendum consists of this page.

1. Page A-1. Change the closing date for receipt of proposals indicated in the fifth line of the first paragraph to "January 5, 1974".

BLACK & VEATCH INTERNATIONAL
Consulting Engineers

* * * * * * * * * * * * * * * *

ACKNOWLEDGMENT

The undersigned bidder hereby certifies that the revisions set forth in this addendum have been incorporated in his bid and are a part of the contract documents.

Signed _____

_____

Date _____

(PLN - 6104)
(CONTROL AND INSTRUMENT EQUIPMENT - K-2A)
(ADDENDUM 3)
121873

4970204 (13)
PD-AAD-777

PERUSAHAAN UMUM LISTRIK NEGARA
AGENCY OF MINISTRY OF PUBLIC WORKS AND POWER
GOVERNMENT OF REPUBLIC OF INDONESIA
SEMARANG STEAM POWER PLANT UNITS 1 AND 2

B

260p.

AID LOAN 497-H-024

SPECIFICATIONS AND DOCUMENTS

TURBINE GENERATORS
SPECIFICATION 6104-M-10A

CONTRACT ISSUE

GENERAL ELECTRIC COMPANY

159 Madison Avenue

New York, New York 10016 USA

BLACK & VEATCH INTERNATIONAL
consulting engineers
KANSAS CITY, MISSOURI, USA JAKARTA, INDONESIA

PERUSAHAAN UMUM LISTRIK NEGARA

SEMARANG STEAM POWER PLANT

SPECIFICATIONS AND DOCUMENTS
FOR
TURBINE GENERATORS

Specification M-10A

TABLE OF CONTENTS

		Page	through Page
I.	BIDDING REQUIREMENTS		
	Invitation to Bidders	A-1	A-2
	Instructions to Bidders	B-1	B-10
	Proposal	C-1	C-3
	Proposal Data	D-1	D-14
	Contractor's Proposal 247-E-5002		
	Proposal Letter Dated 5 October 1973	3 pages	
	Equipment Description	1 page	
	Outline Drawing	1 page	
	Turbine Data	14 pages	
	Generator Data	11 pages	
	Accessories	22 pages	
	Comments	1 page	
	Contractor's Letter Dated 5 February 1974	5 pages	
	Contractor's Letter Dated 6 May 1974	2 pages	
	Bid Bond	E-1	E-2
II.	CONTRACT FORMS		
	Owner's Letter of Intent Dated 8 March 1974	2 pages	
	Contract Agreement	CA-1	CA-3
	Basis of Contract Award	BA-1	BA-2
	Performance Bond	PB-1	PB-2
*	~~Payment Bond~~	~~BP-1~~	~~BP-2~~
III.	CONTRACT REGULATIONS		
	General Conditions	GC-1	GC-33
*	~~Special Conditions~~	~~SC-1~~	~~SC-10~~
IV.	SPECIFICATIONS		
	Part 1 - GENERAL REQUIREMENTS		
	Section		
	1A - General Description and Scope of the Work	1A-1	1A-5
	1B - General Equipment Specifications	1B-1	1B-16
	1C - Engineering Data	1C-1	1C-9

(PLN - 6104)
(TURBINE GENERATOR - M-10A)
021573

* Not included in Contract

	Page	through Page
1D - Electric Motors	1D-1	1D4-3
Part 2 - EQUIPMENT REQUIREMENTS		
Section		
2A - Design and Performance Criteria	2A-1	2A-8
2B - Turbine	2B-1	2B-10
2C - Generator	2C-1	2C-5
2D - Excitation System	2D-1	2D-7
2E - Lube Oil Conditioner	2E-1	2E-3
2F - Hydrogen Generation Equipment	2F-1	2F-3
* Part 3 - ERECTION REQUIREMENTS		
Section		
3A - Scope of On-site Work	3A-1	3A-3
3B - Equipment Erection	3B-1	3B-9
APPENDIX		
Addendum 1 dated August 2, 1973	9 pages	
Addendum 2 dated August 15, 1973	3 pages	
Addendum 3 dated August 31, 1973	4 pages	
Addendum 4 dated September 17, 1973	2 pages	

* Not included in Contract

(PLN - 6104)
(TURBINE GENERATOR - M-10A)
021573

INVITATION TO BIDDERS

TURBINE GENERATORS
FOR
SEMARANG STEAM POWER PLANT
PERUSAHAAN UMUM LISTRIK NEGARA

Sealed proposals will be received by Perusahaan Umum Listrik Negara (an agency of the Ministry of Public Works and Power of the Government of the Republic of Indonesia), at the office of the Director of Construction, Perusahaan Umum Listrik Negara, Jalan Sunan Ngampel 1, Kebajoran Baru, * Jakarta, Indonesia until 11:00 a.m. Western Indonesia Time on ~~September 7~~ ~~24, 1973~~ and then publicly opened for furnishing and erecting: October 11, 1973

TWO TURBINE GENERATORS
TWO LUBE OIL CONDITIONERS
HYDROGEN GENERATION EQUIPMENT

to be incorporated in the new 100 Mw (2-50 Mw units) Semarang Steam Power Plant, located in the port area of the City of Semarang, Java, Indonesia.

United States funds for the project will be furnished under United States Agency for International Development (AID) Loan 497-H-024.

It will be a condition of the proposal that all proposed equipment and materials shall have their source and origin in countries designated as eligible in United States AID Geographic Code 941.

Proposals will be considered only from qualified manufacturers, or authorized representatives of qualified manufacturers, who regularly manufacture equipment and materials of the type specified and who have built three or more units with similar design requirements, each with not less than three years of successful operating experience.

Bidders must submit data with their proposals to establish their qualifications for performing the work. Proposals not accompanied by this data may be classified as nonresponsive and subject to disqualification.

Prospective bidders may examine and obtain copies of the specifications at the following offices:

1. Black & Veatch International
   Jalan Sunan Ngampel 1
   Kebajoran Baru
   Jakarta, Indonesia

* Revised in accordance with Item 1 of Addendum 4

(PLN - 6104)
(TURBINE GENERATOR - M-10A)
071673

2. Black & Veatch International
   1500 Meadow Lake Parkway
   Kansas City, Missouri 64114 USA

Each copy of the specifications delivered to prospective bidders will require a deposit. Deposits for the specifications will not be refunded.

All proposals must be made on the printed forms included in the specification.

Seven duplicate copies of each proposal will be required, each copy being bound with a copy of the specifications and documents.

Each bidder will be required to furnish a bid bond in the amount of not less than 10 per cent of the total value of the bid. The bid bond shall be as stipulated in the Instructions to Bidders included with the specifications.

All proposals shall be firm and cannot be altered, withdrawn, or resubmitted within 150 days after the date set for opening of bids. All proposals shall be on a lump sum basis, and for all work specified. Bids on individual portions of the work will not be considered.

The Perusahaan Umum Listrik Negara reserves the right to accept the proposal which, in its judgment, is the lowest responsive proposal by a qualified bidder; to reject any and all proposals; and to waive, subject to AID approval, minor irregularities in any proposal that is submitted. Proposals received after the specified time of closing will be returned unopened.

MINISTRY OF PUBLIC WORKS AND POWER
represented by
PERUSAHAAN UMUM LISTRIK NEGARA
Ir. Bagoes Moedijantoro,
Director of Construction

INSTRUCTIONS TO BIDDERS

B.1 GENERAL. Proposals are requested by the Perusahaan Umum Listrik Negara, an agency of the Ministry of Public Works and Power of the Government of the Republic of Indonesia, hereinafter referred to as the "Owner" for equipment, materials, and related work set forth in the attached specifications. All proposals shall be prepared and submitted in accordance with these instructions.

B.2 GENERAL PROJECT DESCRIPTION. The specified equipment and materials will be incorporated in the Owner's new Semarang Steam Power Plant. The plant will be located in the port area of the city of Semarang, Central Java, Indonesia. Initial plant construction will consist of two 50 MW oil fired steam electric generating units.

The dollar portion of the project will be financed by the United States Agency for International Development (AID) under Loan 497-H-024. The rupiah portion of the project will be financed by the Government of Indonesia.

B.3 BIDDER QUALIFICATIONS. In order for his proposal to be considered, the bidder must submit written evidence, satisfactory to the Owner, of his qualifications to satisfactorily perform the specified work. Qualification data shall be submitted with the proposal in a separate envelope clearly marked as follows:

QUALIFYING DATA

For _____
(Title of Work Proposed)

By _____
(Bidder's Name)

For

PERUSAHAAN UMUM LISTRIK NEGARA BID OPENING
FOR SEMARANG STEAM POWER PLANT

_____
(Date of Bid Opening)

The envelope of qualifying data shall be placed inside the envelope containing the proposal.

The bidder shall certify his qualifications by submitting evidence that he:

Is regularly engaged in the manufacturer of equipment and materials of the type specified

Does not anticipate change in ownership or major policy during the period of the proposed work. If such change is anticipated the scope and effect thereof shall be defined.

Has adequate plant and manufacturing capacity available to do the work properly and expeditiously within the time period specified

Has, or can arrange for an adequate field organization to properly supervise and perform installation of the equipment and materials in Indonesia

Has adequate financial status to meet the financial obligations incident to the work

Has no claims pending against him regarding the quality of performance of his work

Is a well established manufacturer having adequate technical knowledge and practical experience

Has designed and manufactured three or more units having similar design requirements, each of which has been in successful commercial operation for a period of not less than three years. The evidence shall consist of a selected listing of the units, indicating for each unit the owner's name, location, date of initial operation, and rating. The listing shall be specially prepared for this particular bidding and shall list only those units falling under the above requirements.

Has designed and manufactured equipment of the type proposed during the preceding two years.

Has overseas experience in tropical climates with equipment of the type proposed.

The bidder is advised that the above stated requirements are a minimum and that the Owner reserves the right to request the submittal of additional information.

The Owner reserves the right to reject the proposal of any bidder if, in the opinion of the Owner, the qualification data is incomplete or the bidder is not qualified to satisfactorily perform the work.

B.4 PROPOSALS. Seven copies of each proposal shall be prepared and submitted, each copy containing a complete bound copy of these contract documents. Proposals which are not prepared and submitted in accordance with these instructions may be rejected.

B.4.1 Preparation. Each proposal shall be carefully prepared using the proposal and data forms bound herewith. Entries on the proposal and data forms shall be typed, using dark black ribbon, or legibly written in black ink. All prices shall be stated in words and figures except where the forms provide for figures only. All proposals shall be in English.

The bidder shall not alter any part of these specifications in any way.

The bidder shall staple or otherwise bind, with each bound copy of contract documents submitted, a signed copy of each addendum issued for these specifications during the bidding period. The bidder shall assemble all drawings, catalog data, and other supplementary information necessary to thoroughly describe materials and equipment covered by the proposal, and shall attach such supplemental information to the bound copy of these specifications submitted with the proposal. No such descriptive data will in any way be construed to be a part of or to modify in any way the bidder's proposal.

B.4.2 Signatures. Each bidder shall sign the proposal with his usual signature and shall give his full business address. The names of all persons signing should also be typed or printed below the signature.

Bids by partnerships shall be signed with the partnership name followed by the signature and designation of one of the partners or other authorized representative. A complete list of the partners shall be included with the proposal.

Bids by a corporation shall be signed in the official corporate name of the corporation, followed by the signature and designation of the president, secretary, or other person authorized to bind the corporation.

A bid by a person who affixes to his signature the word "president", "secretary", "agent", or other designation, without disclosing his principal, will be rejected. Satisfactory evidence of the authority of the officer signing in behalf of the corporation shall be furnished. Bidding corporations shall designate the state in which they are incorporated and the address of their principal office.

The bidder's name stated on the proposal shall be the exact legal name of the firm.

B.4.3 Submittal. Proposals shall be submitted in sealed envelopes endorsed on the outside with the bidder's name and address and marked on the outside as follows:

PROPOSAL FOR _____ (Name of equipment)
SEMARANG STEAM POWER PLANT
TO BE OPENED 11:00 A.M. WESTERN INDONESIA TIME
IN JAKARTA, INDONESIA on
_____, 197_.
(Date of Opening)

The proposal along with supplementary information and qualification data shall be transmitted to the following:

The original and four copies to:

PERUSAHAAN UMUM LISTRIK NEGARA
Jalan Sunan Ngampel 1
Kebajoran Baru
Jakarta, Indonesia

Attention: Ir. Bagoes Moedijantoro
Director of Construction

Two copies to:

Black & Veatch International
1500 Meadow Lake Parkway
Kansas City, Missouri USA 64114

Attention: Mr. L. J. Svoboda

Proposals may be submitted either by authorized local representatives or directly by qualified manufacturers. A single proprietary interest shall not submit multiple proposals for the same work even though the individual proposals are submitted under different names. The Owner reserves the right to reject proposals so submitted.

Proposals will be received up to the date and time specified in the INVITATION TO BIDDERS. Proposals received after that time will be returned to the sender unopened. It is the responsibility of the bidder to assure that his proposal is received by Perusahaan Umum Listrik Negara prior to the time set for opening. Bidders shall send a cablegram to the Owner at the time their proposal is dispatched indicating that the proposal has been mailed. The cablegram should be addressed to Ir. Bagoes Moedijantoro, Director of Construction, PLNPST, Jakarta, Indonesia.

B.4.4 Firm and Complete Proposals. All prices stated in the Proposal of the successful bidder shall be firm throughout the duration of the
* contract without escalation, except as provided in the GENERAL CONDITIONS under PAYMENTS (Local Currency Needs) for adjustment of the rupiah portion of the Contract.

Proposals shall be for the complete scope of the work specified. Proposals for individual components of the work will not be considered.

B.4.5 Withdrawal. Proposals may be withdrawn, altered, and resubmitted at any time before the time set for opening the bids. Proposals may not be withdrawn, altered, or resubmitted within 150 days thereafter.

B.5 INFORMATION TO BE SUBMITTED WITH PROPOSAL. Each bidder shall submit with his proposal the name of manufacturer and the type or model of each principal item of equipment or material he proposes to furnish. He shall also submit drawings and descriptive matter indicating general dimensions, principle of operation, and the materials from which the parts are made. Any bid not having sufficient descriptive matter to describe accurately the equipment or materials bid upon may be rejected as irregular. The drawings and descriptive matter submitted by the successful bidder will be retained by the Owner. Any material departure from these drawings and descriptive matter as submitted will not be permitted without written permission from the Owner.

Verbal statements made by the bidder at any time regarding quality, quantity or arrangement of equipment will not be considered.

If alternate equipment or materials are indicated in these specifications the bidder shall have the option of selecting any one of the alternates so indicated.

B.6 PROPOSAL GUARANTEE. Each proposal shall be accompanied by a proposal guarantee in an amount not less than 10 per cent of the total bid.

* Deleted in accordance with Item 1 of Addendum 1

The proposal guarantee shall be made payable without condition, in USA Dollars to Perusahaan Umum Listrik Negara, and the amount thereof may be retained by said Perusahaan Umum Listrik Negara as liquidated damages if the bidder's proposal is accepted and the bidder fails to enter into contract in the form prescribed, with legally responsible surety, within 45 calendar days after the date he is awarded the contract.

The proposal guarantee of each unsuccessful bidder will be returned after award of contract or when his proposal is rejected. The proposal guarantee of the bidder to whom the contract is awarded will be returned when said bidder executes the Contract and files a satisfactory Performance Bond. The proposal guarantee of the second lowest responsive bidder may be retained for a period not to exceed 150 days pending the execution of the Contract and Performance Bond by the successful bidder.

The proposal guarantee shall be in the form of a bank draft, an irrevocable bank guarantee or an acceptable bidder's bond in the form included herein. The surety must be approved by the Owner and AID. Bank drafts or guarantees must be issued by a solvent USA bank meeting the criteria established by the USA Controller of Currency for guarantees issued by USA national banks. Bidder's bonds must be issued by companies authorized to do business in the bidder's state of incorporation and must meet the criteria established by the USA Treasury Department for acceptable sureties on US Government bonds.

B.7 TAXES, PERMITS, AND LICENSES. The bidder's attention is directed to the provisions set forth in the GENERAL CONDITIONS under the article TAXES, PERMITS, AND LICENSES.

Each bidder shall be responsible for determining the applicable taxes, permits, and licenses.

B.8 TIME SCHEDULE. The time schedule for performing the specified work will be a basic consideration of the Contract. The proposal shall be based upon submittal of drawings and engineering data in accordance with the requirements of Section 1C and performance of the work in accordance with the schedule specified in Section 1A. It will be necessary that the bidder satisfy the Owner of his ability to complete the work within the stipulated time. In this connection, attention is called to the provisions of the attached GENERAL CONDITIONS relative to delays and extensions of time.

B.9 LOCAL CONDITIONS. Each bidder is urged to visit the site of the work and thoroughly inform himself of all conditions and factors which would affect the prosecution and completion of the work; including the arrangement and conditions of existing or proposed structures affecting or which are affected by the proposed work, the procedure necessary for maintenance of uninterrupted operation, the availability and cost of labor, and facilities for transportation, handling and storage of materials and equipment.

It must be understood and agreed that such factors have been properly investigated and considered in the preparation of the proposal submitted. No claims for financial adjustment to any contract awarded for the work under these specifications and documents will be permitted by the Owner which are based on the lack of such prior information or its effect on the cost of the work.

B.10 INTERPRETATION OF SPECIFICATIONS. If any prospective bidder is in doubt as to the true meaning of any part of the proposed contract documents, he may submit to the Engineer a written request for an interpretation. The person submitting the request will be responsible for its prompt delivery. Any interpretation of the proposed documents will be made only by addendum mailed or delivered to each person receiving a set of such documents. The Owner will not be responsible for any other explanations or interpretations of the proposed documents.

* B.11 BOND. The Contractor to whom the work is awarded will be required to furnish a performance bond ~~and a payment bond~~ to the Owner prior to signing of the Contract. The ~~EACH~~ bond shall be equal to 30 per cent of the total contract amount (USA Dollars plus Indonesian Rupiahs). The Contractor may furnish a bond in USA Dollars for that portion of the contract to be paid in dollars and in Indonesian Rupiahs for that portion of the contract to be paid in rupiahs.

The bond or bonds shall cover the performance of the work included in these specifications and payment for labor and materials. The bonds shall be executed on the forms provided copies of which are attached hereto. The bond or bonds shall be signed by a surety authorized to do business in the state in which the Contractor is incorporated or has his principal office, or in the case of an Indonesian Rupiah bond, by a surety authorized to do business in Indonesia; acceptable as surety to the Owner and AID; and acceptable as surety under the criteria established by the USA Treasury Department for acceptable sureties on US Government bonds.

The rupiah bond will be required 60 days prior to start of construction in Indonesia.

B.12 INELIGIBILITY. No firm included by AID on its list of suspended, debarred, or ineligible bidders will be permitted to bid either individually or in a joint venture, nor shall any firm so listed qualify for performing the work as a subcontractor or otherwise.

No USA firm, or any firm owned more than 50 per cent by a USA firm shall be eligible for bidding or financing if the USA firm is not in compliance with Executive Order 11246, as amended, and regulations and orders issued thereunder.

* Not Included In Contract

B.13 ACCEPTANCE AND REJECTION OF PROPOSALS. The Owner reserves the right to accept the proposal which, in its judgment, is the lowest responsive proposal by a qualified bidder; to reject any and all proposals; and to waive, subject to AID approval, minor irregularities in any proposal that is submitted.

A responsive proposal is one which accepts all of the items and conditions of these specifications and documents without material modification. A material modification is one which affects in any way the price, quantity, quality, or delivery or installation date of equipment or materials; or the price, quality, scope, delivery date, or completion date of equipment and materials, or other services to be supplied or performed; or, which limits in any way any responsibilities, duties, or liabilities of the bidder or any rights of the Owner or of AID, as any of the foregoing have been specified or defined in these specifications and documents.

Award of contract must be approved by AID.

B.14 CURRENCIES. Proposal pricing shall be stated in USA Dollars and Indonesian Rupiahs as shown in the Proposal. It is intended that the Contractor be paid in the currencies expended by him. Costs incurred outside Indonesia shall be shown as USA Dollars. Pricing shall be in rupiahs for that portion of the work performed in Indonesia, except wage payment to expatriate employees and other allowable dollar costs.

B.15 EVALUATION. The proposals will be evaluated comparing the investment cost of equipment and materials, investment costs of erection of the equipment and materials (foreign and domestic), and the annual fuel cost. Energy and fuel costs will be calculated using the following load profile and steam generator efficiencies:

Turbine Load, MW	Annual Operating Time, hours per year	Annual Generation, kWh x 10^6	Assumed Steam Generator Efficiency, per cent
15.0	800	12.0	89.0
20.0	800	16.0	89.0
25.0	2,400	60.0	89.0
30.0	2,400	72.0	88.9
40.0	1,200	48.0	88.7
45.0	200	9.0	88.5
50.0	200	10.0	88.0

Evaluation will be based upon a fuel cost of $0.45/$10^6$Btu.

Evaluation period will be 10 years. The annual interest rate is 9 per cent.

The total proposal price for equipment and materials and erection will be compared in US Dollars. The Rupiah portion of the proposal price will be expressed in USA Dollars at the exchange rate of 415 Indonesian Rupiahs per USA Dollar.

The assumed load profile and steam generator efficiencies indicated above and the proposal data shall be included in the award formula to establish a total comparative evaluated cost for each bidder.

Each proposal will be evaluated in accordance with the following Award Formula:

Award Formula = A+B+C+D

Where: A = Equipment cost of two turbine generators (fas), Item C.1 of Proposal

B = Equipment installation cost in USA Dollars, Item C.3 of Proposal

C = Equipment installation cost in Rupiah equivalent USA Dollars, Item C.3 of Proposal

D = Present worth of annual fuel cost as indicated below

Present worth is the Present Worth Factor (PWF), Uniform Series, based on an annual interest rate of 9 per cent for a period of 10 years multiplied by the annual cost. The PWF is 6.427 at 9 per cent for 10 years. The annual fuel cost and its present worth will be established in accordance with the following:

Col 1	Col 2	*Col 3	*Col 4	*Col 5	*Col 6
Turbine Load, MW	kWh/yr x 10^6	Guaranteed Btu/kWh	Total Annual Fuel Input, Btu x 10^6	Unit Fuel Cost, $/$10^6$ Btu	Total Annual Fuel Cost, $
15	12	10,085	121,020	0.45	54,459
20	16	9,648	154,368	0.45	69,466
25	60	9,411	564,660	0.45	254,097
30	72	9,266	667,152	0.45	300,218
40	48	9,148	439,104	0.45	197,597
45	9	9,152	82,368	0.45	37,066
50	10	9,202	92,020	0.45	41,409
				Annual Fuel Cost	$954,312

* Added for Contract

Present worth of annual fuel cost
= Annual Fuel Cost x Present Worth Factor

Present worth of annual fuel cost
= Annual Fuel Cost x 6.427

$6,133,363

Notes

Col 1 Turbine load as assumed in the load profile, MW

Col 2 Annual generated kilowatthours as assumed from the load profile kWh

Col 3 Guaranteed Btu per kWh from Proposal

Col 4 Total annual Btu input (Column 2 x Column 3)

Col 5 Unit fuel cost of $0.45 per million Btu at the specified steam generator efficiency

Col 6 Total annual fuel cost based upon assumed load profile (Column 4 x Column 5)

* Bidders shall insert data required in Columns 3 through 6

** The guaranteed Btu/kwhr listed in column three for various turbine loads are based on heat rate formula per Article 2A.4.2, rated steam conditions, two inches mercury exhaust pressure, zero percent makeup and three percent to air heater.

* Added in accordance with Item 2 of Addendum 1

** Added for Contract

PROPOSAL

To: Ir. Bagoes Moedijantoro, Director of Construction
PERUSAHAAN UMUM LISTRIK NEGARA
Jalan Sunan Ngampel 1
Kebajoran Baru, Jakarta, Indonesia

PROPOSAL FOR TURBINE GENERATORS

Gentlemen:

The undersigned bidder having read and examined the specifications and associated contract documents for the above designated equipment and materials which will be incorporated in the new Semarang Steam Power Plant does hereby propose to furnish and install the equipment and materials and provide the services set forth in this Proposal.

All prices stated herein are firm and shall not be subject to escalation provided this Proposal is accepted within 150 days after the date of opening of the proposals.

The prices stated in USA Dollars include all USA taxes which might lawfully be assessed against the undersigned. All Indonesian taxes which might lawfully by assessed against the undersigned shall be for the account of the Owner in accordance with the provisions of Article GC.22.2.

LUMP SUM PRICES

The undersigned bidder hereby proposes to furnish and erect two turbine generators, two lube oil conditioners, and hydrogen generation equipment complete in accordance with the specifications and associated contract documents as defined in Article GC.1 of the GENERAL CONDITIONS for the following firm lump sum prices.

C.1 EQUIPMENT AND MATERIALS

Lump sum price for furnishing two turbine generators, two lube oil conditioners, and hydrogen generation equipment fas USA port of shipment including installation technical services complete as specified:

FIVE MILLION TWO HUNDRED SEVENTY NINE THOUSAND 00/100 — — — — Dollars ($5,279,000USA)
(Price in Words)

(PLN - 6104)
(TURBINE GENERATOR - M-10A)
(ADDENDUM 2)
081573

C.2 FREIGHT

Estimated lump sum price of ocean freight including port charges for handling, loading, and unloading onto barge; insurance; and port surcharge for shipping all equipment and materials furnished under C.1 above from USA port to Port of Semarang, Indonesia:

TWO HUNDRED FORTY THOUSAND 00/100 — — — — Dollars ($240,000USA)
(Price in Words)

C.3 ERECTION

Lump sum price for receiving on board barge at the Port of Semarang, hauling, unloading, storing, erecting, and placing into successful operation at the plant site located in the harbor area the equipment and materials furnished under C.1 above, complete as specified:

FIVE HUNDRED SIXTY ONE THOUSAND 00/100 — — — — — — — — Dollars ($561,000USA)
(Price in Words)

and

THIRTY SEVEN MILLION NINE HUNDRED SEVENTY TWO FIVE HUNDRED - - - Rupiahs (Rp IND) — 37,972,500 —
(Price in Words)

The undersigned hereby proposes that he will perform the majority of the erection work with his own forces and that specific portions of the erection work not performed by the undersigned will be performed by the following subcontractors, subject to Owner and AID approval:

Work Subcontracted	Name of Subcontractor
ERECTION	GENERAL ELECTRIC TECHNICAL SERVICES COMPANY, INC.

'PLN - 6104)
(TURBINE GENERATOR - M-10A)
(ADDENDUM 1)
G80273

The undersigned hereby declares that only the persons or firms interested in the Proposal as principal or principals are named herein, and that no other persons or firms than herein mentioned have any interest in this Proposal or in the contract to be entered into; that this Proposal is made without connection with any other person, company, or parties likewise submitting a proposal; and that it is in all respects for and in good faith, without collusion or fraud.

If this Proposal is accepted, the undersigned bidder agrees to submit engineering data, provide services, and to complete delivery and erection of the equipment and materials in accordance with the schedules stipulated in the specifications. The undersigned fully understands that adherence to the schedules stipulated is of the essence of the contract.

If this Proposal is accepted, the undersigned hereby agrees to enter into a contract on the attached forms within 45 calendar days from the date of notice by the Owner of award of contract and to furnish satisfactory Performance and Payment Bonds to the Owner.

Dated at New York, N.Y. this 5 day of October, 1973

Bidder GENERAL ELECTRIC COMPANY
INTERNATIONAL SALES DIVISION

By H. J. O'Brien
H. J. O'BRIEN

Title Attorney-in-Fact

Business Address of Bidder 159 MADISON AVENUE
NEW YORK, NEW YORK 10016, U.S.A.

State of Incorporation NEW YORK

Address of Principal Office 159 MADISON AVENUE
NEW YORK, NEW YORK 10016, U.S.A.

PROPOSAL DATA

D.1 GENERAL. Each bidder shall submit complete and definitive information on his offering in sufficient detail to permit a complete analysis of the bid. The requirements stated in the INSTRUCTIONS TO BIDDERS relative to information submittal shall be followed.

The requirements for information contained in this section are basic requirements. Additional information shall be provided as requested by the Engineer.

D.2 PERFORMANCE CURVES. The following performance curves shall be furnished as specified in Part 2.

Heat balance diagrams as specified in Part 2 of these specifications

Capability versus exhaust pressure curve for guaranteed and maximum expected throttle flow including condition of 105 per cent of rated pressure and with all heaters in service

D.3 ARRANGEMENT DRAWING. An outline drawing, prepared specifically for this Proposal, of the turbine generator unit and the auxiliaries shall be submitted giving the following information:

Turbine overall length, width, and height

Generator overall length, width, and height

Location and size of steam inlet connection

Bearing spans

Exhaust connection dimensions and location

Shaft center line to floor line dimension

Generator rotor removal clearance

Minimum distance from shaft center line to center of crane lifting hook when in uppermost position for handling any part of machine

Table of weights showing assembled weight of major components, weights to be handled during erection, and weight of parts to be handled during overhaul

All drawings shall be in sufficient detail to permit preliminary plant arrangement studies to be made.

D.4 SUPPLEMENTARY INFORMATION. The following supplementary information shall be submitted:

List of recommended spare parts, needed for a three year period of operation and estimated total cost, CI&F. The successful bidder only will be required to submit a complete listing with individual prices.

D.5 EQUIPMENT DATA. The information required on the following pages is to assist the Engineer in analyzing the Proposal and in making an accurate estimate of the work required to install and erect the equipment and materials.

The data listed herein is stated for definitive purposes and for the convenience of the Owner.

The data listed herein shall apply for each turbine generator unit furnished under these specifications.

The data listed herein shall not relieve the Contractor of his responsibility for meeting the requirements of the detailed specifications.

Note: Write entries boldly with black ink or type entries using carbon black ribbon. Do not use ball point pens. The completed pages will be reproduced by blue line printing.

	General Electric Company (Bidder's Name)
D.5.1 General	
Overall dimensions, feet	
Length	52'8"
Width	13'6"
Height above floor	9'6"
Minimum size opening through which largest component can be moved into a building, feet	
Width Turbine Actual (unlagged)	13'1"
Height Turbine Actual (Unlagged)	12'2"
Heaviest piece to be handled during erection, lb	Generator Assy - 250,000
Heaviest piece to be handled after erection, lb	Turbine Upper Half - 42,000
Minimum distance required from operating floor to center of crane lifting hook when in uppermost position for handling any part of machine	20'7"
D.5.2 Turbine	
Assembled weight of turbine complete without external accessories, lb	190,000
Will the turbine be completely assembled at the factory	Yes
Will the turbine be shipped fully assembled	Yes
Type and cylinder arrangement	Single Cylinder; Impulse

Performance

	MW Output	Btu per kwhr *
Condition A, guaranteed	12.5	10449
Condition B, guaranteed	25	9490
Condition C, guaranteed	37.5	9244
Condition D, guaranteed	50.823	9286
Condition E, expected	56.082	9170

(Trim Line)

*Gross Heat Rate: See Proposal for Other calculated heat rates.

(PLN - 6104)
(TURBINE GENERATOR - M-10A)
061873

	General Electric Company (Bidder's Name)
Throttle flow, lb per hour	
Condition D, guaranteed	451,574
Condition E, expected	498,335
Approximate minimum load at which unit can operate satisfactorily for continuous period, kW	5% of Guarantee
Time required for pickup from minimum load to maximum load, minutes	
Length of last stage blade, in.	20"
Exhaust annulus areas, last stage wheel, sq ft	26.2"
Steam loading on last row of blades under Condition D, lb per sq ft	11,800
Velocity at tip of longest row of blades, fps	1255
Bearings - Main	
Type	Axial Groove; Elliptical
Number	Turbine - 2; Generator - 2
Thrust bearing, type	Tapered Land
Number of main bearings and type	See Above
Method of fastening, shrouding, and lashing	N/A
Number and location of stage blading fitted with stellite shields	None
Type of shaft sealing	Labyrinth
Number, type, and location of shaft couplings	1 - Solid

(Trim Line)

(PLN - 6104)
(TURBINE GENERATOR - M-10A)
021573

	General Electric Company (Bidder's Name)
Materials and type of fabrication	
Turbine shaft	Chrome Moly Vanadium Forging
Steam chest	1 1/4 Chrome 1/2 Moly
Casing bolts	Chrome moly vanadium
Stop valve body	1 1/4 Chrome 1/2 Moly
Turbine blading	12 Chrome
Heat insulation type and description	Plastic cement, blankets and/or block
Turbine casing	
Pipe insulation	Preformed Block with Aluminum lagging
D.5.3 Lubricating Oil System.	
Will turbine oil reservoir be shipped completely assembled with coolers, pumps, and motors, mounted	yes
Oil coolers	
Water flow at maximum load, gpm	430
Water side pressure loss, ft.	7 ft.
D.5.4 Gland Steam Removal Equipment	
Type	Water Separator & Blower
Number of exhauster units	1
D.5.5 Generator	
Assembled weight of generator complete without external accessories, lb	208000
Will the generator be completely assembled at the factory	Yes - Except for Coolers
Will stator and rotor be shipped assembled	Yes - but Bearings will be slushed

(Trim Line)

	General Electric Company (Bidder's Name)
Maximum kVA rating of generator	
0.5 psi hydrogen	43750
15 psi hydrogen	57500
30 psi hydrogen	62500
Generator rated voltage	11500
Maximum kVA rating air cooled	18750
Generator reactance in per cent values on 11.5 kV rating, at maximum kVA rating of generator with 30 psi hydrogen	
Zero sequence at rated current (X_o)	8.0%
Negative sequence at rated voltage (X_2)	16.5%
Subtransient at rated voltage (X''_d)	17.5%
Transient at rated current (X'_d)	31.5%
Synchronous at rated current (X_d)	175%
Surge impedance, ohms/phase	84
Short circuit ratio when operating at Condition D	0.58
Generator voltage regulation	
Rise in terminal voltage in per cent of full load voltage for load of 100 per cent of nominal rating and rated lagging power factor that will occur with constant field current and with the generator operating at rated voltage, nominal speed, and when the load is reduced to zero	34.0 per cent

(Trim Line)

(PLN - 6104)
(TURBINE GENERATOR - M-10A)
061873

	General Electric Company (Bidder's Name)
Rise in terminal voltage in per cent of full load voltage for load of 100 per cent of nominal rating and 100 per cent power factor that will occur with constant field current and with the generator operating at rated voltage, nominal speed, and when the load is reduced to zero	31.0 per cent
Generator winding capacitance to ground, all phases tied together, mfd	0.48
Generator pull-out power in kW at rated voltage with infinite bus and field set for	
Maximum kVA at 0.80 pf	90600
Maximum kVA at 1.0 pf	75900
Hydrogen consumption at different hydrogen pressures	
Hydrogen pressure, psi	0.5 / 15 / 30
Hydrogen consumption (cu ft/24 hour guaranteed)	/ /
Minimum space to withdraw rotor	
Straight pull	24' 3"
Askew	18' 3" x 13' - 1"

D.5.6 Rotary Excitation System

Make and type of excitation system	G.E. type EDF direct connected rotating main exciter with pilot exciter
Will excitation equipment be shipped fully assembled	No

(Trim Line)

	General Electric Company (Bidder's Name)
Rated output of excitation system, kW	200
Exciter ceiling voltage	300
Maximum continuous exciter current, amperes	800
Weight of exciter	11,500
Maximum temperature rise above ambient air temperature of 40 C	
Generator collector rings	85°C
Exciter field winding	40
Exciter commutator	55
Air circulated through exciter and collectors, cfm	4300
Generator field current at maximum excitation, amperes	771
Voltage required to provide generator field current at maximum amperes	249
Temperature rise of air through exciter and collectors at maximum excitation, degrees F	15
Make and type of voltage regulator	G.E. GFA4
Number, type, and location of exciter temperature detectors	
Armature	6
Exciter	2
Cold Gas (Generator)	4
Hot Gas (Generator)	4

(Trim Line)

(PLN - 6104)
(TURBINE GENERATOR - M-10A)
021573

	General Electric Company (Bidder's Name)
Generator field breaker and motor operated rheostat	
Length, ft	5' 6"
Depth, ft	5' 0"
Height, ft	7' 6"
Weight, lb	2500
D.5.7 Brushless Excitation System (if proposed)	
Make and type of excitation system	
Will excitation equipment be shipped fully assembled	
Rated output of excitation system, kW	
Exciter ceiling voltage	
Maximum continuous exciter current, amperes	
Make and type of voltage regulator	
Excitation system response ratio	
Guaranteed	
Expected	
Voltage regulator and excitation system cubicles	
Length, in.	
Depth, in.	
Height, in.	
Weight, lb	

(Trim Line)

(Bidder's Name) _____

D.5.8 Static Excitation System (if proposed)

Make and type of excitation system _____

Will excitation equipment be shipped fully assembled _____

Rated output of excitation system, kW _____

Exciter ceiling voltage _____

Maximum continuous exciter current, amperes _____

Make and type of voltage regulator _____

Voltage regulator and excitation system switchgear group _____

Overall dimensions _____

Weight, lb _____

Excitation power potential transformer _____

Size of transformer, kVA _____

Weight, lb _____

D.5.9 Hydrogen Coolers

Maximum water flow, gpm _____

Water side pressure loss, ft. _____

(Trim Line)

GENERAL ELECTRIC COMPANY
(Bidder's Name)

D.5.10 Turbine Generator Motors
Typical

	HP	Volts	Freq & Phases	RPM	Type Encl	FL AMPS
Main suction pump (ac)	60	230/460	60-3	3660	ODP	70
Emergency bearing oil pump (dc)	15	120	-	3500	TEFC	116
Turning gear oil pump (ac)	20	230/460	60-3	3600	ODP	24.5
Turning gear motor	3	230/460	60-3	3600	ODP	5.2
Main seal oil pump (ac)	N/A					
Emergency seal oil pump (dc)	N/A					
Oil reservoir vapor extractor	3/4	230/460	60-3	1200	ODP	1.55
Seal oil vacuum pump	1/2	230/460	60-3	1800	TENV	
Gas drier	X					
Purity meter blowers	X					
Voltage regulator	X					
Other motors (list use and data)						
Gland Exhauster	2	230/460	60-3	3600	ODP	2.8
Oil Conditioner Pump	3/4	230/460	60-3	1200	ODP	1.55
Oil Conditioner Blower	1/4	115	60-1	1800	EXP. PROOF	4.4

D.5.11 Lube Oil Conditioner

Manufacturer	Bowser
Model or type number	832P Size 3
Overall dimensions	60"x65"x47" tall
Weight of unit, lb	5950" operating, 2450" shipping
Flow back capacity, gallons	267 gal
Circulation flow, gph	270 gal
Approximate quantity of oil in system, gallons	500 gal
Circulating pump	
Make and model number	Viking Model H32D
Motor size, hp	3/4

(Trim Line)

(PLN - 6104)
(TURBINE GENERATOR - M-10A)
052973

	General Electric Company (Bidder's Name)
Speed, rpm	1200
Full load current, amps	1.55
Ventilating fan	
Make and model number	American
Capacity, scfm	335
Motor size, hp	1/2
D.5.12 Hydrogen Generation Equipment	
Manufacturer	THE ELECTROLYSER CORPORATION
Number of cells	3
Hydrogen output per cell, cfh	25
Guaranteed analysis of gas	
Hydrogen, per cent	99.75%
Oxygen, per cent	99.5%
Nitrogen, per cent	Less than 0.01%
Carbon dioxide, per cent	Less than 0.01%
Makeup water requirements, gpm	0.5
Cooling water requirements, gpm	1.0
Compressors	
Manufacturer	GARDNER DENVER
Model number	ADA
Gas dryer	
Manufacturer	LECTRODLYER (OR EQUIVALENT)
Model number	SPECIAL FOR H_2
Hydrogen gas purity analyzer	
Manufacturer	LEEDS & NORTHRUP (OR EQUIVALENT)
Model number	7802-D-A8
Electrolyte purity analyzer	
Manufacturer	THE ELECTROLYSER CORPORATION
Model number	613A (Specific Gravity Tester)

(Trim Line)

(PLN - 6104)
(TURBINE GENERATÓR - M-10A)
052973

	GENERAL ELECTRIC COMPANY (Bidder's Name)
Filter	
Manufacturer	PALL CORPORATION
Model number	MEC 8001G
Number of spare cartridges furnished	12
Chemical makeup	
Material	LOW CHLORIDE CAUSTIC POTASH
Quantity furnished in addition to initial charge	6 DRUMS (400 LBS EACH)
Hydrogen storage tank	
Size	
Diameter	8 FT. (APPROX)
Straight side	30 FT. "
Overall length	33 FT. "
Volume, cubic feet	1570 CT. FT.
Material (by ASTM)	
Shell	TANK WOULD BE DESIGNED TO ASME
Heads	CODE AND DESIGN DATA IS NOT
Saddle plates	AVAILABLE AT THIS DATE
Metal thicknesses, inches	
Shell	
Heads	
Belly saddle plates	
Support saddle plates	
Weight, lbs	23,000 (APPROX)

(Trim Line)

GENERAL ELECTRIC COMPANY
(Bidder's Name)

Power requirement for motors, kW	
416 volts, 3 phase, 50 hertz	2 KW
240 volts, single phase, 50 hertz	.5 KW

Motors (list use and data)

HP	Volts	Freq & Phases	RPM	Type Encl	FL AMPS
1½	416	3/50	1500	XPL	2.4
½	416	3/50	1500	DPF	1.0
1/3	240	1/50	1500	XPL	3.0

Regeneration heaters for gas drying	
Number	2
kW, each	0.600
Rated voltage	240 single phase

(Trim Line)

(PLN - 6104)
(TURBINE GENERATOR - M-10A)
052973

GENERAL ELECTRIC

INTERNATIONAL SALES DIVISION

GENERAL ELECTRIC COMPANY, 159 MADISON AVE., NEW YORK, N. Y. 10016, U.S.A.

October 5, 1973

Ir. Bagoes Moedijantoro, Director of Construction
PERUSAHAAN UMUM LISTRIK NEGARA
Jalan Sunan Ngampel 1
Kebajoran Baru, Jakarta, Indonesia

Subject: Semarang Steam Power Plant
Units 1 and 2
Specification 6104-M-10A
GE Proposal No. 247-E-5002

Gentlemen:

In response to your invitation to bid for the furnishing and installation of two 50 MW steam turbine generators and associated equipment for the Semarang Steam Power Plant, we are pleased to offer our proposal consisting of the following:

1- PLN specification 6104-M-10A with completed Proposal Form(pages C-1 to C-3) and Proposal Data (pages D-3 to D-14.)

2- Addenda 1 to 4 to Specification M-10A dated 8/2/73, 8/15/73, 8/31/73 and 9/17/73 respectively.

3- General Electric Turbine Generator Specification LTSD - 9825D dated 10/5/73.

4- The Electrolyser Corporation proposal specification No. 1915-1801 covering the Hydrogen Generation Equipment.

5- Bidder Qualification Data.

6- List of recommended spare parts for three year operation.

7- This Proposal letter dated 10/5/73.

The price for the equipment and services being offered will be as specified per items C. 1, C. 2 and C. 3 of the Proposal Form of specification 6104-M-10A.

The equipment prices quoted include delivery of the equipment FOB Factory, freight prepaid to alongside vessel, New York, with provision for export preparation.

Phone 212 750-2000 | Cable INGECO NEW YORK

In accordance with your specification 6104-M-10A, the equipment is to be delivered and erected in order to meet certain specified calendar dates for "begin start-up period", "initial operation" and "continuous commercial operation". Your specification also defines the "contract effective date" as the date when both the signed contract is approved by AID and an irrevocable Letter of Credit is established in a USA Bank, however, no specific calendar date has been specified for this "Contract effective date". In as much as based upon our current factory production schedule, the two turbine generators offered herein can be delivered US Port of Export 16 and 17 months after the date of the establishment of the irrevocable Letter of Credit, we can comply with the specific calendar dates for "begin start-up period", "initial operation" and "commercial operation" on the basis that the "effective date of contract" is within the 150 day validity period of this proposal.

With regard to the performance test requirements of Article 2A.5 of your specification 6104-M-10A, we wish to point out that the one percent tolerence specified is not consistent with a station instrument test, but rathar approaches the tolerence to be expected under an ASME precision test. We therefore feel that the conditions relating to the proposed test be subject to mutual agreement.

We propose that the warranty of the turbine generators be for a period of 18 months from initial synchronization of each unit, but in any event not to exceed 36 months from date of shipment FOB factory. Based upon the completion dates indicated in your specification this will provide you with the same period of warranty which you have requested, namely 12 months from commercial operation. However it associates the responsibility of the Contractor to an event which is within his control, whereas the achieving of commercial operation is contingent upon work being completed by others so that the plant can be placed in commercial operation.

With regard to Article GC.27 we propose that title to the equipment pass to the Owner upon delivery FOB factory, with all other provisions of this Article remaining as specified.

With regard to Article GC.28 we prepose that the following be added:

The total liability of Contractor (including its subcontractors) on any claim, whether in contract, tort (including negligence) or otherwise, arising out of, connected with, or resulting from the manufacture, sale, delivery, resale, repair, replacement or use of any product or the furnishing of any service shall not exceed the price allocable to the product or service or part thereof which gives rise to the claim.

In no event shall Contractor (or its subcontractors) be liable for any special or consequential damages including, but not limited to, damages for loss of revenue, cost of capital, claims of customers for service interruptions or failure of supply, and costs and expenses incurred in connection with labor, overhead, transporation or substitute facilities or supply sources.

The estimated CIF price for spare parts for three years operation is $45,000 per unit.

We appreciate this opportunity to offer equipment and services for your proposed power plant and sincerely trust you will find our proposal acceptable and that we will be favored with your order.

Very truly yours

H. J. O'Brien
Attorney-in-fact
Power Generation Sales

GENERAL ELECTRIC COMPANY

PROPOSAL

For PERUSAHAAN UMUM LISTRIK NEGARA
SEMARANG STEAM POWER PLANTS
UNITS 1 and 2

Prop. No. 247-E-5002
Spec. No. LTSD-9825B
Cont. No.
Req. No.

This proposal includes:

Two (2) 50001 KW rated, 3000 RPM, single flow steam turbines with one row of 20.0" last stage buckets designed for inlet steam conditions of 1250 PSIG, 950° FTT and condensing to 3.5" HgA with five (5) uncontrolled extractions for feedwater heating.

* Two (2) 62500 KVA, ~~0.80~~ 0.85 power factor, 3 phase, 50 cycle, 3000 RPM, 11,500 volts, 0.58 short-circuit ratio, hydrogen-cooled (30 PSIG) synchronous generators, with four (4) corner-mounted coolers designed for 95°F and 125 PSIG cooling water.

* Two (2) Static Excitation Systems, including regulator and excitation cubicle, rated 200 KW, 250 volts.

OR

Two (2) 200 KW, 250 volt, gear connected, differential compound wound, exciters.

Two (2) 7.5 KW, 250 volt, compound, pilot exciters.

Two (2) Sets of features and accessories as described herein.

* See Basis of Contract Award

DISTANCE REQUIRED TO REMOVE GEN. ROTOR		
METHOD OF REMOVAL	A	B
STRAIGHT PULL	33FT 7"	—
CANTING (HORIZONTALLY)	28FT 7"	12FT 0"

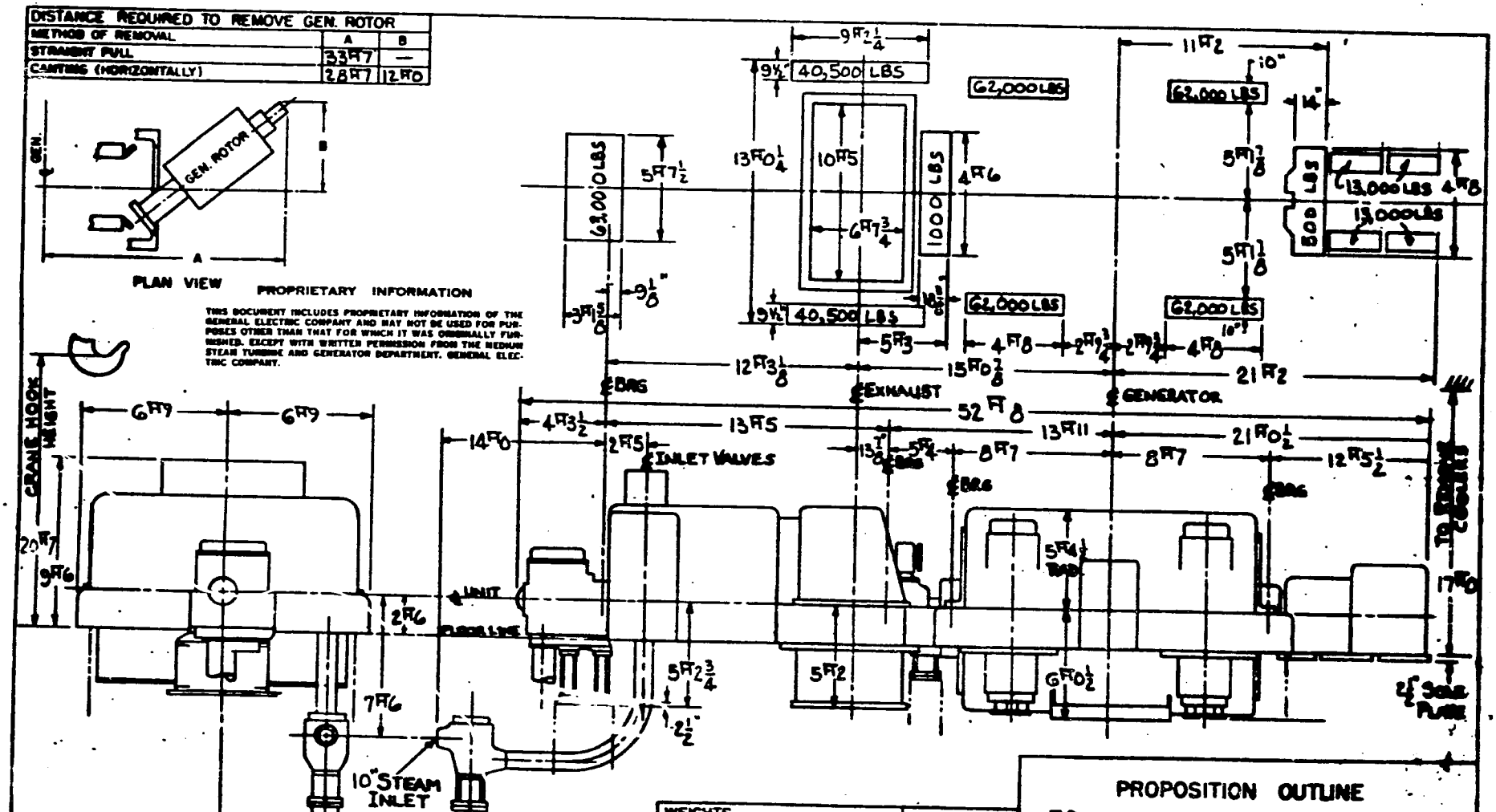

NOTES:
1- WEIGHTS AND DIMENSIONS ARE APPROXIMATE AND MUST NOT BE USED FOR CONSTRUCTION.
2- FOUNDATION LOADINGS SHOWN ARE DEAD WEIGHT LOADINGS ONLY

WEIGHTS	LBS.
NET WEIGHTS	440,000
SHIPPING WEIGHT	480,000
HEAVIEST PART BEFORE ERECTION; GEN. ASSY	250,000
HEAVIEST PART AFTER ERECTION: TURBINE U.H.	42,000

PROPOSITION OUTLINE

50,000-K.W. TURBINE GENERATOR
62,500 K.V.A. GENERATOR
INDONESIA

DRAWN BY R. Jamborne 9-5-73
APPROVED [illegible] 9-5-73
GENERAL ELECTRIC CO. LYNN, MASS.
RW80-9825B

34FE-256MD-98 EXH-[illegible]

GENERAL ELECTRIC COMPANY

GUARANTEED PERFORMANCE SPECIFICATIONS for STEAM TURBINE-GENERATOR UNIT

FOR: PERUSAHAAN UMUM LISTRIK NEGARA
SEMARANG STEAM POWER PLANTS
UNITS 1 AND 2

SPECIFICATION No. LTSD-9825B
PROPOSITION No. 247-E-500:

TURBINE TYPE

KILOWATTS	RPM	INITIAL STEAM PRESSURE PSIG	INITIAL STEAM TEMP. DEGREES F	REHEAT STEAM TEMP. DEGREES F	EXHAUST PRESS. IN. HG A
50001	3000	1250	950	-	3.5

HEAT RATE

GENERATOR TERMINAL OUTPUT KILOWATTS	HEAT RATE * BTU per KW-HR	For METHOD of CALCULATION, REFER to HEAT BALANCE DIAGRAM Number	Date
56082	9170	LTSD-9825B-1	8/27/73
52788	9336	LTSD-9825B-2	8/27/73
50823	9286	LTSD-9825B-3	8/27/73
37500	9244	LTSD-9825B-4	8/27/73
25000	9490	LTSD-9825B-5	8/27/73
12500	10449	LTSD-9825B-6	8/27/73
50001	9441	LTSD-9825B-7	8/27/73
51498	9163	LTSD-9825B-8	8/27/73

The turbine will be guaranteed to pass not less than 451574 pounds of steam per hour at rated steam conditions. This is based on developing 50001 kw with an exhaust pressure of 3.5 inches Mercury Absolute, 0 percent feedwater makeup, and a feedwater heating cycle as shown on heat balance diagram LTSD-9825B-8 dated 8/27/73

Unless otherwise specifically noted, the remainder of the information represent engineering calculations and design, and, as such, are expected but not guaranteed.

*Gross Heat Rate. For Net Heat Rate and Customer Heat Rate see page 3 or the Applicable Heat Balance Diagram.

 Date: 10/5/73 - JDM

Summary of Heat Rate Performance

HEAT RATE

Generator Terminal Output Kilowats	Gross Heat Rate BTU per KW-HR	Net Heat Rate BTU per KW-HR	*Customer Heat Rate BTU per KW-HR	For Method of Calculation, Refer t Heat Balance Diagram Number
56082	9170	9349	9349	LTSD-9825B-1
52788	9336	9511	9252	LTSD-9825B-2
50823	9286	9458	9202	LTSD-9825B-3
37500	9244	9409	9162	LTSD-9825B-4
25000	9490	9658	9411	LTSD-9825B-5
12500	10449	10644	10378	LTSD-9825B-6
50001	9441	9625	9441	LTSD-9825B-7
51498	9163	9331	9331	LTSD-9825B-8

*Customer Heat Rate as defined by Specification.

Date: 10/5/73 - JDM

GENERAL ELECTRIC COMPANY

Specification No. LTSD-9825B
Proposition No. 247-E-5002

TURBINE DATA

Guaranteed Performance

The steam turbine is guaranteed to produce 50001 KW while operating at rated steam conditions, 3.5 inches of Mercury absolute exhaust pressure, 3% cycle make-up, 3% to air heaters and while exhausting through 5 stages to heat its own feedwater, as shown on Heat Balance LTSD-9825B-7 dated 8/27-73.

The guaranteed throttle steam flow for the conditions listed above is 451 574 lbs/hr.

Expected Performance

To assure that the steam turbine will pass the guaranteed throttle flow while considering variations in flow coefficients from expected values, manufacturing tolerances on drawing areas, etc., which may affect the flow, the turbine is being designed for an expected flow of 474,153 lbs. per hour. With valves wide open and rated steam conditions, the expected output with this flow is 52788 KW at 3.0" HgA. exhaust pressure and 0% make-up, and 3% to air heaters as shown on Heat Balance LTSD-9825B-2 dated 8/27/73.

The turbine is guaranteed to be safe for continuous operation with valves wide open. Furthermore, the unit shall be capable of operating continuously with valves wide open and 105% of rated initial pressure while passing an expected flow of 498335 lbs. per hour. The maximum expected output with this flow is 56082 KW at 3.0 inches HgA., 0% make-up 0% air heaters and 1313 PSIG initial pressure, as shown on Heat Balance LTSD-9825B-1 dated 8/27/73.

Proposition Outline

The Proposition Outline RW80-9825B for this unit follows the heat balances. Weights and dimensions are generally correct. However, the Proposition Outline should not be used for final construction drawings and designs, since the coordinated engineering required to meet the Purchaser's installation may necessitate certain minor changes in order to provide the personal design of your equipment.

GENERAL ELECTRIC COMPANY

Specification No. LTSD-9825B
Proposition No. 247-E-5002

ALLOWABLE PRESSURE AND TEMPERATURE VARIATIONS

Rated Initial Pressure 1250 psig Rated Temp. 950 °F

INTRODUCTION

The following allowable pressure and temperature variations are intended to provide for unexpected irregularities during operation and it is expected that steps will be taken to minimize their occurrence, and especially their simultaneous occurrence.

ALLOWABLE INITIAL PRESSURE VARIATION

The pressure at the turbine main steam valve(s) shall be controlled so that it does not exceed 105% of rated pressure. During abnormal conditions the pressure may exceed rated pressure briefly by as much as 20% but the aggregate duration of such brief swings beyond 105% of rated pressure shall not exceed 12 hours per 12-month operating period.

ALLOWABLE INITIAL TEMPERATURE VARIATIONS

The steam temperature at each steam lead to the turbine main steam valve(s) shall average not more than rated temperature over any 12-month operating period. In maintaining this 12-month average, the temperature shall not exceed rated temperature by more than 15°F except during abnormal conditions resulting in temperatures not in excess of rated temperature by more than 25°F for operating periods not more than 400 hours per 12-month operating period nor 50°F above rated temperature for swings of 15 minutes' duration or less, aggregating not more than 80 hours per 12-month operating period.

In maintaining the temperature specified in the preceding paragraph, the steam temperature at the inlet to any turbine main steam valve must be within 25°F of the steam temperature at the inlet of any other turbine main steam valve, except during abnormal conditions it is acceptable to operate with temperature differences not in excess of 75°F for periods of 15 minutes' duration or less, providing such occurrences are at least four hours apart.

GENERAL ELECTRIC COMPANY

Specification No. LTSD-9825B
Proposition No. 247-E-5002

OPERATING LIMITATIONS WITH FEEDWATER HEATERS REMOVED FROM SERVICE

Emergency operation with feedwater heaters out of service is permissible provided the loading of turbine-generator parts does not exceed that under normal cycle operation with all extractions in full operation. Turbines may be operated for emergency periods with feedwater heaters out of service as follows:

1. One or more non-adjacent heaters may be removed from service provided steam flow is adjusted so that the turbine output does not exceed the maximum guaranteed output.

2. If adjacent heaters are to be removed from service, and all heaters at higher pressures are also removed from service, turbine output must not exceed the maximum guarantee output.

3. If adjacent lower pressure heaters are to be removed from service while the highest pressure heater is still in service, the steam flow must be adjusted to provide at least ten percent load reduction from maximum guarantee output for each additional adjacent heater removed from service:- i.e., 10 percent load reduction for two adjacent heaters out of service, 20 percent load reduction for three adjacent heaters out of service, etc. The maximum load reduction required for any number or combination of heaters out of service is 50 percent.

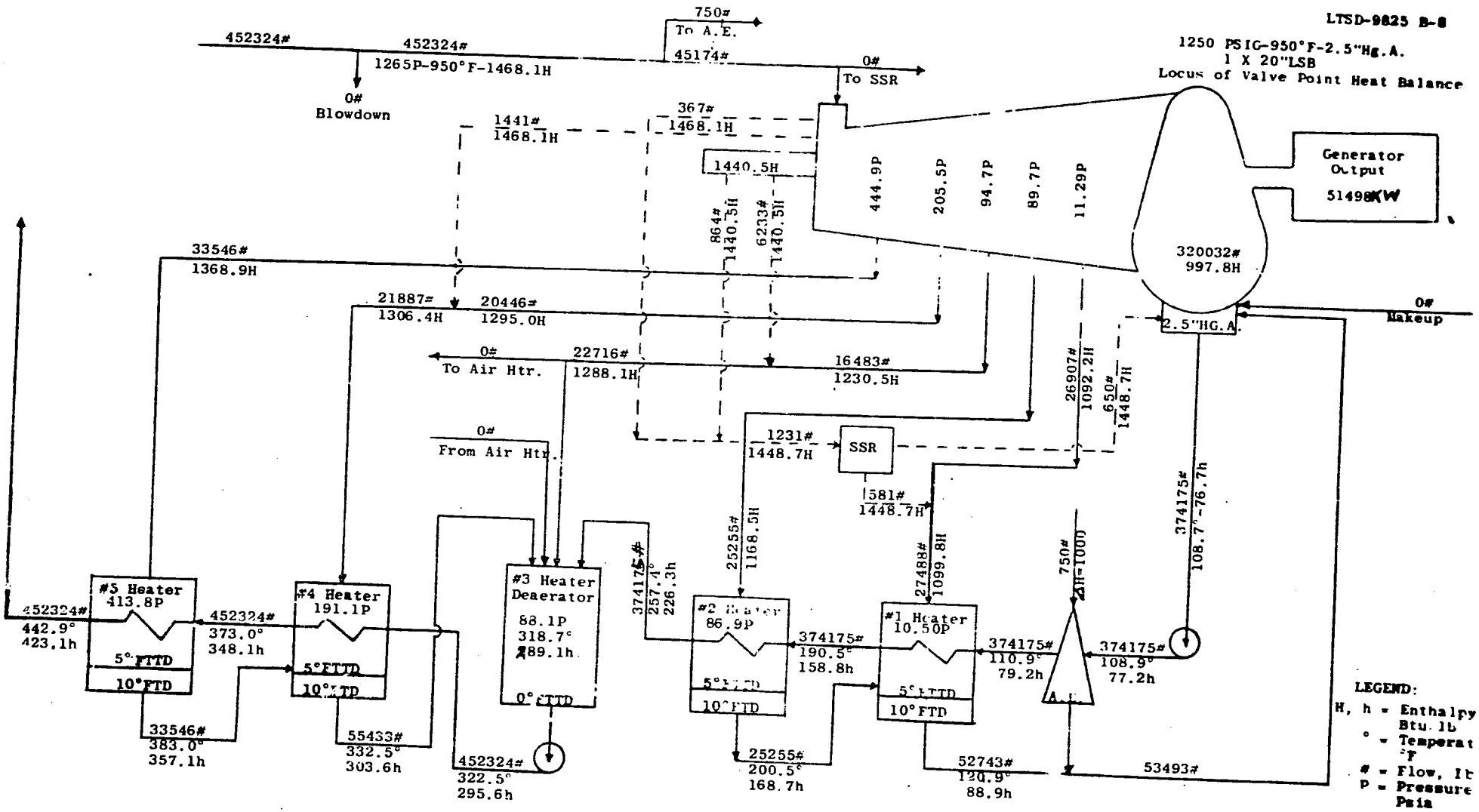

GENERAL ELECTRIC COMPANY
WEST LYNN, MASS.
6/27/73

Gross Heat Rate = $\frac{451574\ (1468.1-423.1)}{51498}$ = 9163 BTU/KW Hr.

Customer Heat Rate = $\frac{451574\ (1468.1-423.1)}{51498-926}$ = 9331 BTU/KW Hr.

INDONESIA
LOCUS OF VALVE POINT HEAT BALANCE
0% BLOWDOWN-0% TO AIR HEATER
CALCULATED DATA NOT GUARANTEED

CUSTOMER HEAT RATE = 9349 BTU/KWHR
GROSS HEAT RATE = 9170 BTU/KWHR NET HEAT RATE = 9349 BTU/KWHR
GENERATOR OUTPUT = 56082 KW ----- RATED 62500 KVA. 0.80 P.F., 30 PSIG M2
GENERATOR LOSS = 753 KW AT .90 P.F., 30.0 PSIG M2 FIXED LOSS = 260 KW
STEAM CONDITIONS 1313 PSIG, 950 DEG F, 3.00 IN HGA 3000 RPM

	F LBS/HR	P PSIA	T F	H BTU/LB
HEAT SOURCE				
STEAM FROM BOILER	498335	1327.7	950.0	1465.99
STEAM TO AIR EJECTOR	750			1465.99
STEAM TO STEAM SEAL SYSTEM	0			1465.99
BLOWDOWN	0			
FEEDWATER TO BOILER	499085		452.8	434.04
TURBINE				
STEAM TO THROTTLE	498335	1327.7	950.0	1465.99
VALVE STEM LEAKAGE				
TO HEATER NO. 4 EXTR.	1495	228.3		1465.99
TO STEAM SEAL SYSTEM	405	15.70		1465.99
GOVERNING STAGE EXIT		957.0		1445.91
END PACKING LEAKAGE				
TO HEATER NO. 3 EXTR.	6880	104.2		1445.91
TO STEAM SEAL SYSTEM	940	15.70		1445.91
LAST STAGE FLOW	351119	1.478		999.95
EXPANSION LINE END POINT				968.11
LAST STAGE IS 1 X 20				
HEATER NO. 5 (CLOSED WITH D.C.)				
TURBINE SHELL CONDITIONS				
STEAM TO HEATER (7 PC DELTA P)	38349	891.1 / 858.7	724.5	1371.84
FEEDWATER LEAVING (5 DEG TTD)	499085		452.8	434.04
FEEDWATER ENTERING DRAIN COOLER	499085		381.1	358.73
DRAINS LEAVING D.C. (10 DEG TD)	38349	858.7	391.1	365.78
HEATER NO. 4 (CLOSED WITH D.C.)				
TURBINE SHELL CONDITIONS				
STEAM EXTRACTED FROM TURBINE	23311	228.3	556.8	1297.59
STEAM FROM VALVE STEM PACKING	1495	228.3		1297.59
EXTRACTION STEAM (7 PC DELTA P)	24806	218.5		1465.99
FEEDWATER LEAVING (5 DEG TTD)	499085		381.1	1307.74
FEEDWATER ENTERING DRAIN COOLER	499085		329.5	358.73
DRAINS ENTERING	38349			302.97
DRAINS LEAVING D.C. (10 DEG TD)	63156	218.5	339.5	365.78
FEEDWATER PUMP (75.0 PC EFF)				310.92
FEEDWATER LEAVING	499085	16597	329.5	302.97
FEEDWATER ENTERING	499085		325.5	298.14
PUMP POWER REQUIRED - KW	1073			
AIR HEATER				
FLOW FROM HEATER 3 EXTR.	0			1232.73
FLOW TO HEATER NO. 3	0	96.88		298.14
HEATER NO. 3 (OPEN)				
TURBINE SHELL CONDITIONS				
STEAM EXTRACTED FROM TURBINE	18657	104.2	411.2	1232.73
STEAM FROM END PACKING	6880			1232.73
STEAM TO HEATER (7 PC DELTA P)	25545	96.88		1445.91
FLOW FROM AIR HEATER	0			1289.88
FEEDWATER LEAVING	499085	96.88	325.5	298.14
FEEDWATER ENTERING	410384		263.0	232.03
DRAINS ENTERING	63156			310.92
HEATER NO. 2 (CLOSED WITH D.C.)				
TURBINE SHELL CONDITIONS				
STEAM TO HEATER (7 PC DELTA P)	28243	43.58 / 40.53	272.5	1170.30
FEEDWATER LEAVING (5 DEG TTD)	410384			1170.30
FEEDWATER ENTERING DRAIN COOLER	410384		263.0	232.03
DRAINS LEAVING D.C. (10 DEG TD)	28243	40.58	205.1	183.41
HEATER NO. 1 (CLOSED WITH D.C.)				173.28
TURBINE SHELL CONDITIONS				
STEAM EXTRACTED FROM TURBINE	28910	12.42	203.4	1093.71
STEAM FROM STEAM SEAL SYSTEM	703	12.42		1093.71
EXTRACTION STEAM (7 PC DELTA P)	29622	11.55		1450.92
FEEDWATER LEAVING (5 DEG TTD)	410384		195.1	1182.17
FEEDWATER ENTERING DRAIN COOLER	410384		117.1	183.41
DRAINS ENTERING	28243			85.33
DRAINS LEAVING D.C. (10 DEG TD)	57865	11.55	127.1	173.28
				95.84
STEAM SEAL SYSTEM				
LEAKOFF STEAM FROM PACKINGS	1353	15.70		1450.92
MAKEUP STEAM FROM BOILER	0			1465.99
SEAL STEAM TO L.P. PACKINGS	650	15.70		1450.92
STEAM TO HEATER NO. 1 EXTR.	703	12.42		1450.92
AIR EJECTOR				
STEAM FROM BOILER	750			1465.99
FEEDWATER LEAVING	410384		117.1	85.33
FEEDWATER ENTERING	410384		115.2	83.50
DRAINS TO CONDENSER	750			59.78
FEEDWATER PUMP (75.0 PC EFF)				
FEEDWATER LEAVING	410384	120.0	115.2	83.50
FEEDWATER ENTERING	410384		115.1	83.03
CONDENSER				
STEAM TO CONDENSER	351769	1.478		1000.78
DRAINS ENTERING	58615			
FLOW FROM MAKEUP SOURCE	0			
FEEDWATER LEAVING	410384	1.478	115.1	83.03

RATING FLOW (GUARANTEED) IS 451574 LB/HR AT INITIAL STEAM CONDITIONS OF 1250 PSIG, 950 DEG F. TO ASSURE THAT THE TURBINE WILL PASS THIS FLOW, CONSIDERING VARIATIONS IN FLOW COEFFICIENTS FROM EXPECTED VALUES, MANUFACTURING TOLERANCES ON DRAWING AREAS, ETC., WHICH MAY EFFECT THE FLOW, THE TURBINE IS BEING DESIGNED FOR AN EXPECTED FLOW FIVE PERCENT GREATER THAN THE GUARANTEED FLOW. IN ACCORDANCE WITH THE G.E. COMPANY ALLOWABLE INITIAL PRESSURE VARIATIONS SPECIFICATION, THE TURBINE WILL BE SAFE FOR CONTINUOUS OPERATION AT 105 PERCENT OF RATED INITIAL PRESSURE WITH CONTROL VALVES WIDE OPEN PASSING AN EXPECTED FLOW OF APPROXIMATELY 498335 LB/HR.

BEST AVAILABLE COPY

INDONESIA
LOCUS OF VALVE POINT HEAT BALANCE
0% BLOWDOWN-3% TO AIR HEATER
CALCULATED DATA NOT GUARANTEED

CUSTOMER HEAT RATE = 9252 BTU KWHR
GROSS HEAT RATE = 9334 BTU/KWHR NET HEAT RATE = 9511 BTU/KWHR
GENERATOR OUTPUT = 5278 KW RATED 62500 KVA, 80 P.F., 30 PSIG H2
GENERATOR LOSS = 753 KW AT 184 P.F., 30.0 PSIG H2 FIXED LOSS = 260 KW
STEAM CONDITIONS 1250 PSIG, 950 DEG F, 3.00 IN HGA 3000 RPM

	F LBS/HR	P PSIA	T F	H BTU/LB
HEAT SOURCE				
STEAM FROM BOILER				
STEAM TO AIR EJECTOR	474153	1265.7	950.0	1468.13
STEAM TO STEAM SEAL SYSTEM	750			1468.13
BLOWDOWN	0			1468.13
FEEDWATER TO BOILER	0			1468.13
	474903		448.1	428.80
TURBINE				
STEAM TO THROTTLE				
VALVE STEM LEAKAGE	474153	1265.7	950.0	1468.13
TO HEATER NO. 4 EXTR.				
TO STEAM SEAL SYSTEM	1423	215.5		1468.13
GOVERNING STAGE EXIT	385	157.70		1468.13
END PACKING LEAKAGE		912.0		1445.88
TO HEATER NO. 3 EXTR.				
TO STEAM SEAL SYSTEM	6587	95.55		
LAST STAGE FLOW	868	157.70		1445.88
EXPANSION LINE END POINT	394777	1.478		1445.88
LAST STAGE IS 1 X 20				1008.83
				991.14
HEATER NO. 8 (CLOSED WITH D.C.)				
TURBINE SHELL CONDITIONS				
STEAM TO HEATER (7 PC DELTA P)		868.7	725.4	1373.56
FEEDWATER LEAVING (5 DEG TD)	35911	435.9		1373.56
FEEDWATER ENTERING DRAIN COOLER	474903		448.1	428.80
DRAINS LEAVING D.C. (10 DEG TD)	474903		377.0	352.26
	35911	435.9	387.0	361.32
HEATER NO. 4 (CLOSED WITH D.C.)				
TURBINE SHELL CONDITIONS				
STEAM EXTRACTED FROM TURBINE		215.5	557.2	1298.73
STEAM FROM VALVE STEM PACKING	23016	215.5		1298.73
EXTRACTION STEAM (7 PC DELTA P)	1423			1468.13
FEEDWATER LEAVING (5 DEG TD)	24438	208.8		1308.99
FEEDWATER ENTERING DRAIN COOLER	474903		377.0	352.26
DRAINS ENTERING	474903		323.1	276.26
DRAINS LEAVING D.C. (10 DEG TD)	35911			342.32
	60349	208.8	333.1	304.24
FEEDWATER PUMP (75.0 PC EFF)				
FEEDWATER LEAVING				
FEEDWATER ENTERING	474903	1581.7	323.1	298.26
PUMP POWER REQUIRED - KW	474903		319.4	289.76
	972			

BEST AVAILABLE COPY

AIR HEATER				
FLOW FROM HEATER 3 EXTR.	14225			
FLOW TO HEATER NO. 3	14225	88.87		1238.74
				289.76
HEATER NO. 3 (OPEN)				
TURBINE SHELL CONDITIONS				
STEAM EXTRACTED FROM TURBINE		95.55	405.1	1238.74
STEAM FROM END PACKING	16214			1238.74
STEAM TO HEATER (7 PC DELTA P)	6587			1445.88
FLOW FROM AIR HEATER	92903	88.87		1292.89
FEEDWATER LEAVING	14225			289.76
FEEDWATER ENTERING	474903	88.87	319.4	289.76
DRAINS ENTERING	377524		258.0	228.86
	60349			384.24
HEATER NO. 2 (CLOSED WITH D.C.)				
TURBINE SHELL CONDITIONS				
STEAM TO HEATER (7 PC DELTA P)		48.05	267.3	1160.88
FEEDWATER LEAVING (5 DEG TD)	95431	37.28		1160.88
FEEDWATER ENTERING DRAIN COOLER	377524		258.0	228.86
DRAINS LEAVING D.C. (10 DEG TD)	377526		191.2	189.94
	95431	37.28	201.9	189.40
HEATER NO. 1 (CLOSED WITH D.C.)				
TURBINE SHELL CONDITIONS				
STEAM EXTRACTED FROM TURBINE		11.48	199.7	1092.71
STEAM FROM STEAM SEAL SYSTEM	25315	11.48		1092.71
EXTRACTION STEAM (7 PC DELTA P)	603			1452.72
FEEDWATER LEAVING (5 DEG TD)	25918	10.68		1181.08
FEEDWATER ENTERING DRAIN COOLER	377524		191.2	159.94
DRAINS ENTERING	377526		117.2	85.49
DRAINS LEAVING D.C. (10 DEG TD)	25431			189.40
	51349	10.68	127.2	95.19
STEAM SEAL SYSTEM				
LEAKOFF STEAM FROM PACKINGS	1753	15.70		
MAKEUP STEAM FROM BOILER	0			1452.72
SEAL STEAM TO L.P. PACKINGS	650	15.70		1468.13
STEAM TO HEATER NO. 1 EXTR.	603	11.48		1452.72
				1452.72
AIR EJECTOR				
STEAM FROM BOILER	750			
FEEDWATER LEAVING	377524			1468.13
FEEDWATER ENTERING	377526		117.2	85.49
DRAINS TO CONDENSER	750		115.2	83.50
				59.70
FEEDWATER PUMP (75.0 PC EFF)				
FEEDWATER LEAVING	377526	120.0	115.2	83.50
FEEDWATER ENTERING	377524		115.1	83.03
CONDENSER				
STEAM TO CONDENSER	395427	1.478		1081.74
DRAINS ENTERING	52099			
FLOW FROM MAKEUP SOURCE	0			
FEEDWATER LEAVING	377524	1.478	115.1	83.03

RATING FLOW (GUARANTEED) IS 451574 LB/HR AT INITIAL STEAM CONDITIONS OF 1250 PSIG, 950 DEG F. TO ASSURE THAT THE TURBINE WILL PASS THIS FLOW, CONSIDERING VARIATIONS IN FLOW COEFFICIENTS FROM EXPECTED VALUES, MANUFACTURING TOLERANCES ON DRAWING AREAS, ETC., WHICH MAY EFFECT THE FLOW, THE TURBINE IS BEING DESIGNED FOR AN EXPECTED FLOW OF 474153 LB/HR.

I & M DIV., GENERAL ELEC... , LYNN, MASS. 01910 8/27/73

LTSD-98258-2

INDONESIA

LOCIS OF VALVE POINT HEAT BALANCE
OF BLOWDOWN - DC TO AIR HEATER

CUSTOMER HEAT RATE = 9162 BTU/KWHR
GROSS HEAT RATE = 9244 BTU/KWHR NET HEAT RATE = 9409 BTU/KWHR
GENERATOR OUTPUT = 37500 KW ----- RATED 69500 KVA, 180 P.F., 30 PSIG H2
GENERATOR LOSS = 549 KW AT 150 P.F., 15.0 PSIG H2 FIXED LOSS = 260 KW
STEAM CONDITIONS 1250 PSIG, 950 DEG F, 2.00 IN HGA 3000 RPM

	F LBS/HR	P PSIA	T F	H BTU/LB
HEAT SOURCE				
STEAM FROM BOILER				
STEAM TO AIR EJECTOR	320274	1265.7	950.0	1468.13
STEAM TO STEAM SEAL SYSTEM	750			1468.13
BLOWDOWN	0			1468.13
FEEDWATER TO BOILER	0			1468.13
	321024		408.6	385.81
TURBINE				
STEAM TO THROTTLE				
VALVE STEM LEAKAGE	320274	1265.7	950.0	1468.13
TO HEATER NO. 4 EXTR.				
TO STEAM SEAL SYSTEM	1551	149.8		1468.13
GOVERNING STAGE EXIT	257	157.70		1468.13
END PACKING LEAKAGE		596.8		1410.37
TO HEATER NO. 3 EXTR.				
TO STEAM SEAL SYSTEM	4415	84.15		1410.37
LAST STAGE FLOW	599	157.70		1410.37
EXPANSION LINE END POINT	226326	0.9825		989.21
LAST STAGE IS 1 X 20				979.19
HEATER NO. 8 (CLOSED WITH D.C.)				
TURBINE SHELL CONDITIONS				
STEAM TO HEATER (7 PC DELTA P)		809.8	651.7	1342.85
FEEDWATER LEAVING (5 DEG TTD)	21329	287.8		1342.85
FEEDWATER ENTERING DRAIN COOLER	321024		408.6	385.81
DRAINS LEAVING D.C. (10 DEG TD)	321024		344.5	318.31
	21329	287.8	354.5	326.71
HEATER NO. 4 (CLOSED WITH D.C.)				
TURBINE SHELL CONDITIONS				
STEAM EXTRACTED FROM TURBINE		143.8	495.6	1272.66
STEAM FROM VALVE STEM PACKING	13156	143.8		1272.66
EXTRACTION STEAM (7 PC DELTA P)	1551			1468.13
FEEDWATER LEAVING (5 DEG TTD)	14706	133.7		1293.27
FEEDWATER ENTERING DRAIN COOLER	321024		344.5	318.31
DRAINS ENTERING	321024		295.9	268.33
DRAINS LEAVING D.C. (10 DEG TD)	21329			[illegible]
	36036	133.7	305.9	273.83
FEEDWATER PUMP (75.0 PC EFF)				
FEEDWATER LEAVING				
FEEDWATER ENTERING	321024	1581.7	295.9	268.33
PUMP POWER REQUIRED = KW	321024		292.3	261.81
	669			
AIR HEATER				
FLOW FROM HEATER 3 EXTR.				
FLOW TO HEATER NO. 3	9608			1208.81
	9608	59.68		261.81

	F LBS/HR	P PSIA	T F	H BTU/LB
HEATER NO. 3 (CLOSED WITH D.C.)				
TURBINE SHELL CONDITIONS				
STEAM EXTRACTED FROM TURBINE		84.15	353.2	1208.81
STEAM FROM END PACKING	9907			1208.81
STEAM TO HEATER (7 PC DELTA P)	4415			1410.37
FLOW FROM AIR HEATER	14322	59.68		1270.95
FEEDWATER LEAVING	9608			261.81
FEEDWATER ENTERING	321024	59.68	297.3	261.81
DRAINS ENTERING	24105A		235.9	288.90
	36036			275.89
HEATER NO. 2 (CLOSED WITH D.C.)				
TURBINE SHELL CONDITIONS				
STEAM TO HEATER (7 PC DELTA P)		27.29	245.0	1151.07
FEEDWATER LEAVING (5 DEG TTD)	16328	25.38		1151.07
FEEDWATER ENTERING DRAIN COOLER	24105A		235.0	288.90
DRAINS LEAVING D.C. (10 DEG TD)	24105A		173.8	142.08
	16328	25.38	183.8	151.00
HEATER NO. 1 (CLOSED WITH D.C.)				
TURBINE SHELL CONDITIONS				
STEAM EXTRACTED FROM TURBINE		7.855	182.0	1078.86
STEAM FROM STEAM SEAL SYSTEM	1679A	7.855		1078.86
EXTRACTION STEAM (7 PC DELTA P)	206			1427.70
FEEDWATER LEAVING (5 DEG TTD)	17004	7.305		1082.80
FEEDWATER ENTERING DRAIN COOLER	24105A		173.8	142.08
DRAINS ENTERING	24105A		104.2	72.48
DRAINS LEAVING D.C. (10 DEG TD)	16328			151.00
	33332	7.305	114.2	82.17
STEAM SEAL SYSTEM				
LEAKOFF STEAM FROM PACKINGS				
MAKEUP STEAM FROM BOILER	854	157.70		1427.70
SEAL STEAM TO L.P. PACKINGS	0			1468.13
STEAM TO HEATER NO. 1 EXTR.	650	157.70		1427.70
	204	7.855		1427.70
AIR EJECTOR				
STEAM FROM BOILER				
FEEDWATER LEAVING	750			1468.13
FEEDWATER ENTERING	24105A		104.2	72.48
DRAINS TO CONDENSER	24105A		101.3	69.61
	750			69.70
FEEDWATER PUMP (75.0 PC EFF)				
FEEDWATER LEAVING				
FEEDWATER ENTERING	24105A	1284.0	101.3	69.61
	26105A		101.1	69.14
CONDENSER				
STEAM TO CONDENSER				
DRAINS ENTERING	226976	0.9825		990.47
FLOW FROM MAKEUP SOURCE	34089			
FEEDWATER LEAVING	0			
	24105A	0.9825	101.1	69.14

I * M I DIV., GENERAL ELECTRIC CO., LYNN, MASS. 01910 8/27/73

LTSD-90288-6

BEST AVAILABLE COPY

INDONESIA
LOCUS OF VALVE POINT HEAT BALANCE
0% BLOWDOWN - 3% TO AIR HEATER

CUSTOMER HEAT RATE = 9202 BTU/KWHR
GROSS HEAT RATE = 9268 BTU/KWHR NET HEAT RATE = 9458 BTU/KWHR
GENERATOR OUTPUT = 50823 KW ---- RATED 67500 KVA, 780 P.F., 30 PSIG H2
GENERATOR LOSS = 753 KW AT 181 P.F., 30.0 PSIG H2 FIXED LOSS = 280 KW
STEAM CONDITIONS 1250 PSIG, 950 DEG F, 2.50 IN HGA 3000 RPM

	F LBS/HR	P PSIA	T F	H BTU/LB
HEAT SOURCE				
STEAM FROM BOILER				
STEAM TO AIR EJECTOR	451574	1285.7	950.0	1468.13
STEAM TO STEAM SEAL SYSTEM	750			1468.13
BLOWDOWN	0			1468.13
FEEDWATER TO BOILER	0			
	452324		442.9	423.08
TURBINE				
STEAM TO THROTTLE				
VALVE STEM LEAKAGE	451574	1285.7	950.0	1468.13
TO HEATER NO. 4 EXTR.				
TO STEAM SEAL SYSTEM	1442	204.8		1468.13
GOVERNING STAGE EXIT	366	157.70		1468.13
END PACKING LEAKAGE		864.5		1440.47
TO HEATER NO. 3 EXTR.				
TO STEAM SEAL SYSTEM	6268	96.87		1440.47
LAST STAGE FLOW	829	157.70		1440.47
EXPANSION LINE END POINT	389141	1.228		998.83
LAST STAGE IS 1 X 20				983.42
HEATER NO. 3 (CLOSED WITH D.C.)				
TURBINE SHELL CONDITIONS				
STEAM TO HEATER (7 PC DELTA P)		844.8	714.5	1368.82
FEEDWATER LEAVING (5 DEG TTD)	33654	813.7		1368.82
FEEDWATER ENTERING DRAIN COOLER	452324		442.9	423.08
DRAINS LEAVING D.C. (10 DEG TD)	452324		372.7	347.78
	33654	813.7	382.7	358.76
HEATER NO. 4 (CLOSED WITH D.C.)				
TURBINE SHELL CONDITIONS				
STEAM EXTRACTED FROM TURBINE		284.8	547.9	1294.70
STEAM FROM VALVE STEM PACKING	21510	284.8		1294.70
EXTRACTION STEAM (7 PC DELTA P)	1442			1468.13
FEEDWATER LEAVING (5 DEG TTD)	22952	198.8		1305.80
FEEDWATER ENTERING DRAIN COOLER	452324		372.7	347.78
DRAINS ENTERING	452324		319.6	292.80
DRAINS LEAVING D.C. (10 DEG TD)	33654			358.76
	56606	198.8	329.6	388.53
FEEDWATER PUMP (75.0 PC EFF)				
FEEDWATER LEAVING				
FEEDWATER ENTERING	452324	1581.7	319.6	292.80
PUMP POWER REQUIRED - KW	452324		315.9	288.10
	926			
AIR HEATER				
FLOW FROM HEATER 3 EXTR.				
FLOW TO HEATER NO. 3	13547			1227.34
	13547	84.51		288.10

	F LBS/HR	P PSIA	T F	H BTU/LB
HEATER NO. 2 (OPEN)				
TURBINE SHELL CONDITIONS				
STEAM EXTRACTED FROM TURBINE		90.87	397.3	1227.34
STEAM FROM END PACKING	15257			1227.34
STEAM TO HEATER (7 PC DELTA P)	6268			1448.47
FLOW FROM AIR HEATER	21525	84.51		1289.40
FEEDWATER LEAVING	13547			288.10
FEEDWATER ENTERING	452324	84.51	315.9	288.10
DRAINS ENTERING	360647		255.1	223.96
	56608			388.53
HEATER NO. 2 (CLOSED WITH D.C.)				
TURBINE SHELL CONDITIONS				
STEAM TO HEATER (7 PC DELTA P)		88.15	264.4	1165.94
FEEDWATER LEAVING (5 DEG TTD)	24158	55.49		1165.94
FEEDWATER ENTERING DRAIN COOLER	360647		255.1	223.96
DRAINS LEAVING D.C. (10 DEG TD)	360647		188.8	157.88
	24158	55.49	198.8	166.91
HEATER NO. 1 (CLOSED WITH D.C.)				
TURBINE SHELL CONDITIONS				
STEAM EXTRACTED FROM TURBINE		10.08	197.2	1098.17
STEAM FROM STEAM SEAL SYSTEM	25411	10.08		1098.17
EXTRACTION STEAM (7 PC DELTA P)	545			1448.94
FEEDWATER LEAVING (5 DEG TTD)	25956	10.12		1097.88
FEEDWATER ENTERING DRAIN COOLER	360647		188.8	157.88
DRAINS ENTERING	360647		121.0	79.24
DRAINS LEAVING D.C. (10 DEG TD)	24158			168.91
	50104	10.12	121.0	88.94
STEAM SEAL SYSTEM				
LEAKOFF STEAM FROM PACKINGS	1193	15.78		1448.94
MAKEUP STEAM FROM BOILER	0			1468.13
SEAL STEAM TO L.P. PACKINGS	650	15.78		1448.94
STEAM TO HEATER NO. 1 EXTR.	545	10.08		1448.94
AIR EJECTOR				
STEAM FROM BOILER	750			1468.13
FEEDWATER LEAVING	360647		111.0	79.24
FEEDWATER ENTERING	360647		108.9	77.86
DRAINS TO CONDENSER	750			59.78
FEEDWATER PUMP (75.0 PC EFF)				
FEEDWATER LEAVING				
FEEDWATER ENTERING	360647	1284.9	108.9	77.86
	360647		108.7	78.69
CONDENSER				
STEAM TO CONDENSER				
DRAINS ENTERING	389791	1.228		997.98
FLOW FROM MAKEUP SOURCE	50856			
FEEDWATER LEAVING	0			
	360647	1.228	108.7	78.69

I * M I DIV., GENERAL ELECTRIC CO., LYNN, MASS. 01910 0/27/73

LTSD-08288-8

BEST AVAILABLE COPY

INDONESIA
LOCUS OF VALVE POINT HEAT BALANCE
0% BLOWDOWN - 3% TO AIR HEATER

CUSTOMER HEAT RATE = 10378 BTU/KWHR
GROSS HEAT RATE = 10449 BTU/KWHR NET HEAT RATE = 10644 BTU/KWHR
GENERATOR OUTPUT = 12500 KW ---- RATED 62500 KVA, .80 P.F., 30 PSIG H2
GENERATOR LOSS = 358 KW AT .80 P.F., 15.0 PSIG H2 FIXED LOSS = 260 KW
STEAM CONDITIONS 1250 PSIG, 950 DEG F, 2.00 IN HGA 3000 RPM

	F LBS/HR	P PSIA	T F	H BTU/LB
HEAT SOURCE				
STEAM FROM BOILER				
STEAM TO AIR EJECTOR	110814	12857	950.0	1468.13
STEAM TO STEAM SEAL SYSTEM	750			1468.13
BLOWDOWN	343			1468.13
FEEDWATER TO BOILER	0			1468.13
	111908		320.1	293.09
TURBINE				
STEAM TO THROTTLE				
VALVE STEM LEAKAGE	110715	12857	950.0	1468.13
TO HEATER NO. 4 EXTR.				
TO STEAM SEAL SYSTEM	1719	49.65		
GOVERNING STAGE EXIT	89	15.70		1468.13
END PACKING LEAKAGE		195.1		1468.13
TO HEATER NO. 3 EXTR.				1362.71
TO STEAM SEAL SYSTEM	1489	22.41		
LAST STAGE FLOW	218	15.70		1362.71
EXPANSION LINE END POINT	87213	0.9828		1362.71
LAST STAGE IS 1 X 20				1019.99
				1015.40
HEATER NO. 5 (CLOSED WITH D.C.)				
TURBINE SHELL CONDITIONS				
STEAM TO HEATER (7 PC DELTA P)		103.5	545.9	1302.21
FEEDWATER LEAVING (5 DEG TTD)	5321	98.25		1302.21
FEEDWATER ENTERING DRAIN COOLER	111908		320.1	293.09
DRAINS LEAVING D.C. (10 DEG TD)	111908		271.0	243.08
	5321	96.25	281.0	250.32
HEATER NO. 4 (CLOSED WITH D.C.)				
TURBINE SHELL CONDITIONS				
STEAM EXTRACTED FROM TURBINE		49.65	410.9	1240.41
STEAM FROM VALVE STEM PACKING	1846	49.65		1240.41
EXTRACTION STEAM (7 PC DELTA P)	1719			1468.13
FEEDWATER LEAVING (5 DEG TTD)	3565	48.17		1350.20
FEEDWATER ENTERING DRAIN COOLER	111908		271.0	243.08
DRAINS ENTERING	5321		233.3	204.98
DRAINS LEAVING D.C. (10 DEG TD)	8886	48.17	243.3	250.32
				211.80
FEEDWATER PUMP (75.0 PC EFF)				
FEEDWATER LEAVING				
FEEDWATER ENTERING	111908	1581.7	233.3	204.98
PUMP POWER REQUIRED - KW	111908		230.2	198.50
	229			
AIR HEATER				
FLOW FROM HEATER 3 EXTR.				
FLOW TO HEATER NO. 3	3324			
	3324	20.88		1182.82
				198.50

HEATER NO. 3 (OPEN)				
TURBINE SHELL CONDITIONS				
STEAM EXTRACTED FROM TURBINE		22.41	287.1	1182.82
STEAM FROM END PACKING	2667			1182.82
STEAM TO HEATER (7 PC DELTA P)	1489			1362.71
FLOW FROM AIR HEATER	4152	20.88		1247.21
FEEDWATER LEAVING	3324			198.50
FEEDWATER ENTERING	111908	20.88	230.2	198.50
DRAINS ENTERING	95546		183.4	191.69
	8886			211.80
HEATER NO. 2 (CLOSED WITH D.C.)				
TURBINE SHELL CONDITIONS				
STEAM TO HEATER (7 PC DELTA P)		9.788	191.8	1130.70
FEEDWATER LEAVING (5 DEG TTD)	4729	9.828		1130.70
FEEDWATER ENTERING DRAIN COOLER	95546		183.4	191.69
DRAINS LEAVING D.C. (10 DEG TD)	95546		133.0	101.22
	4729	9.828	143.0	110.93
HEATER NO. 1 (CLOSED WITH D.C.)				
TURBINE SHELL CONDITIONS				
STEAM EXTRACTED FROM TURBINE		2.948	140.8	1066.40
STEAM FROM STEAM SEAL SYSTEM	2207	2.948		1066.40
EXTRACTION STEAM (7 PC DELTA P)	0			1482.80
FEEDWATER LEAVING (5 DEG TTD)	2203	2.742		1066.40
FEEDWATER ENTERING DRAIN COOLER	95546		133.0	101.22
DRAINS ENTERING	95546		109.9	77.46
DRAINS LEAVING D.C. (10 DEG TD)	4729			110.93
	6932	2.742	119.9	87.14
STEAM SEAL SYSTEM				
LEAKOFF STEAM FROM PACKINGS				
MAKEUP STEAM FROM BOILER	307	15.70		1393.21
SEAL STEAM TO L.P. PACKINGS	343			1468.13
STEAM TO HEATER NO. 1 EXTR.	658	15.70		1482.80
	0	2.948		1482.80
AIR EJECTOR				
STEAM FROM BOILER				
FEEDWATER LEAVING	750			1468.13
FEEDWATER ENTERING	95546		109.9	77.46
DRAINS TO CONDENSER	95546		101.3	69.61
	750			69.70
FEEDWATER PUMP (75.0 PC EFF)				
FEEDWATER LEAVING				
FEEDWATER ENTERING	95546	120.0	101.3	69.61
	95546		101.1	69.14
CONDENSER				
STEAM TO CONDENSER				
DRAINS ENTERING	87863	0.9825		1023.04
FLOW FROM MAKEUP SOURCE	7682			
FEEDWATER LEAVING	0			
	95546	0.9825	101.1	69.14

T & M I DIV., GENERAL ELECTRIC CO., LYNN, MASS. 01910 8/27/73

LTSD-90258-6

BEST AVAILABLE COPY

INDONESIA
LOCUS OF VALVE POINT HEAT BALANCE
0% BLOWDOWN - 3% TO AIR HEATER

CUSTOMER HEAT RATE = 9411 BTU/KWHR
GROSS HEAT RATE = 9490 BTU/KWHR NET HEAT RATE = 9668 BTU/KWHR
GENERATOR OUTPUT = 25000 KW ===== RATED 62500 KVA, .80 P.F., 30 PSIG H2
GENERATOR LOSS = 430 KW AT .80 P.F., 15.0 PSIG H2 FIXED LOSS = 260 KW
STEAM CONDITIONS 1250 PSIG, 950 DEG F, 2.00 IN HGA 3000 RPM

	F LBS/HR	P PSIA	T F	H BTU/LB
HEAT SOURCE				
STEAM FROM BOILER				
STEAM TO AIR EJECTOR	211371	1265?	950.0	1468.13
STEAM TO STEAM SEAL SYSTEM	750			1468.13
BLOWDOWN	78			1468.13
FEEDWATER TO BOILER	0			
	212198		371.1	348.13
TURBINE				
STEAM TO THROTTLE				
VALVE STEM LEAKAGE	211371	1265?	950.0	1468.13
TO HEATER NO. 4 EXTR.				
TO STEAM SEAL SYSTEM	1639	94.42		1468.13
GOVERNING STAGE EXIT	169	15.78		1468.13
END PACKING LEAKAGE		885.5		1385.46
TO HEATER NO. 3 EXTR.				
TO STEAM SEAL SYSTEM	2887	82.38		1385.46
LAST STAGE FLOW	404	15.78		1385.46
EXPANSION LINE END POINT	156095	0.9828		994.02
LAST STAGE TS 1 X 20				990.50
HEATER NO. 5 (CLOSED WITH D.C.)				
TURBINE SHELL CONDITIONS				
STEAM TO HEATER (7 PC DELTA P)		288.9	597.5	1321.26
FEEDWATER LEAVING (5 DEG TTD)	12342	188.8		1321.26
FEEDWATER ENTERING DRAIN COOLER	212198		371.1	348.13
DRAINS LEAVING D.C. (10 DEG TD)	12342	188.8	313.5	288.39
			323.5	294.24
HEATER NO. 4 (CLOSED WITH D.C.)				
TURBINE SHELL CONDITIONS				
STEAM EXTRACTED FROM TURBINE		94.42	451.3	1255.05
STEAM FROM VALVE STEM PACKING	6887	94.42		1255.05
EXTRACTION STEAM (7 PC DELTA P)	1639			1468.13
FEEDWATER LEAVING (5 DEG TTD)	8526	87.81		1396.01
FEEDWATER ENTERING DRAIN COOLER	212198		313.5	288.39
DRAINS ENTERING	212198		269.7	241.88
DRAINS LEAVING D.C. (10 DEG TD)	12342			294.24
	20869	87.81	229.7	248.90
FEEDWATER PUMP (75.0 PC EFF)				
FEEDWATER LEAVING				
FEEDWATER ENTERING	212198	1581?	269.7	241.88
PUMP POWER REQUIRED - KW	212198		266.3	235.17
	436			
AIR HEATER				
FLOW FROM HEATER 3 EXTR.	6341			
FLOW TO HEATER NO. 3	6341	59.37		1194.23
				235.17

	F LBS/HR	P PSIA	T F	H BTU/LB
HEATER NO. 3 (OPEN)				
TURBINE SHELL CONDITIONS				
STEAM EXTRACTED FROM TURBINE		82.33	316.1	1194.23
STEAM FROM END PACKING	5488			1194.23
STEAM TO HEATER (7 PC DELTA P)	2887			1485.46
FLOW FROM AIR HEATER	8775	89.37		1257.15
FEEDWATER LEAVING	6341			235.17
FEEDWATER ENTERING	212198	89.37	266.3	235.17
DRAINS ENTERING	176215		214.2	182.85
	20868			248.90
HEATER NO. 2 (CLOSED WITH D.C.)				
TURBINE SHELL CONDITIONS				
STEAM TO HEATER (7 PC DELTA P)		18.21	223.0	1139.49
FEEDWATER LEAVING (5 DEG TTD)	10067	18.98		1139.49
FEEDWATER ENTERING DRAIN COOLER	176215		214.2	182.85
DRAINS LEAVING D.C. (10 DEG TD)	176215		157.0	125.26
	10067	18.95	167.0	135.82
HEATER NO. 1 (CLOSED WITH D.C.)				
TURBINE SHELL CONDITIONS				
STEAM EXTRACTED FROM TURBINE		5.550	165.1	1070.37
STEAM FROM STEAM SEAL SYSTEM	8653	5.550		1070.37
EXTRACTION STEAM (7 PC DELTA P)	0			1418.79
FEEDWATER LEAVING (5 DEG TTD)	8653	4.978		1070.37
FEEDWATER ENTERING DRAIN COOLER	176215		157.0	125.26
DRAINS ENTERING	176215		105.6	73.87
DRAINS LEAVING D.C. (10 DEG TD)	10067			135.82
	18720	4.978	115.6	83.95
STEAM SEAL SYSTEM				
LEAKOFF STEAM FROM PACKINGS				
MAKEUP STEAM FROM BOILER	979	15.78		1409.83
SEAL STEAM TO L.P. PACKINGS	78			1468.13
STEAM TO HEATER NO. 1 EXTR.	650	15.78		1418.79
	0	5.550		1418.79
AIR EJECTOR				
STEAM FROM BOILER	750			1468.13
FEEDWATER LEAVING	176215		105.6	73.87
FEEDWATER ENTERING	176215		101.3	69.81
DRAINS TO CONDENSER	750			59.78
FEEDWATER PUMP (75.0 PC EFF)				
FEEDWATER LEAVING				
FEEDWATER ENTERING	176215	128.8	101.3	69.81
	176215		101.1	69.14
CONDENSER				
STEAM TO CONDENSER	156745	0.9828		995.77
DRAINS ENTERING	19470			
FLOW FROM MAKEUP SOURCE	0			
FEEDWATER LEAVING	176215	0.9828	101.1	69.14

I & M DIV., GENERAL ELECTRIC CO., LYNN, MASS. 01910 8/27/73

LTSD-90290-9

BEST AVAILABLE COPY

INDONESIA
LOCUS OF VALVE POINT HEAT BALANCE
3% BLOWDOWN - 3% TO AIR HEATER

CUSTOMER HEAT RATE = 9365 BTU/KWHR
GROSS HEAT RATE = 9441 BTU/KWHR NET HEAT RATE = 9625 BTU/KWHR
GENERATOR OUTPUT = 50001 KW ==== RATED 69500 KVA, 0.80 P.F., 30 PSIG H2
GENERATOR LOSS = 753 KW AT 0.80 P.F., 30.0 PSIG H2 FIXED LOSS = 260 KW
STEAM CONDITIONS 1250 PSIG, 950 DEG F, 3.50 IN HGA 3000 RPM

	F LBS/HR	P PSIA	T F	H BTU/LB
HEAT SOURCE				
STEAM FROM BOILER				
STEAM TO AIR EJECTOR	451574	1285.7	950.0	1468.13
STEAM TO STEAM SEAL SYSTEM	750			1468.13
BLOWDOWN	0			1468.13
FEEDWATER TO BOILER	13547			
	465871		442.6	422.77
TURBINE				
STEAM TO THROTTLE	451574	1285.7	950.0	1468.13
VALVE STEM LEAKAGE				
TO HEATER NO. 4 EXTR.	1444	203.7		1468.13
TO STEAM SEAL SYSTEM	364	15.70		1468.13
GOVERNING STAGE EXIT		864.5		1440.47
END PACKING LEAKAGE				
TO HEATER NO. 3 EXTR.	6274	90.17		1440.47
TO STEAM SEAL SYSTEM	822	15.70		1440.47
LAST STAGE FLOW	369087	1.719		1005.96
EXPANSION LINE END POINT				998.40
LAST STAGE IS 1 X 20				
HEATER NO. 5 (CLOSED WITH D.C.)				
TURBINE SHELL CONDITIONS				
STEAM TO HEATER (7 PC DELTA P)	34719	443.5	713.8	1368.52
FEEDWATER LEAVING (5 DEG TTD)	465871	412.5		1368.52
FEEDWATER ENTERING DRAIN COOLER	465871		442.6	422.77
DRAINS LEAVING D.C. (10 DEG TD)	34719	412.5	372.3	347.23
			382.3	356.30
HEATER NO. 4 (CLOSED WITH D.C.)				
TURBINE SHELL CONDITIONS				
STEAM EXTRACTED FROM TURBINE		203.7	546.9	1298.24
STEAM FROM VALVE STEM PACKING	22245	203.7		1298.24
EXTRACTION STEAM (7 PC DELTA P)	1444			1468.13
FEEDWATER LEAVING (5 DEG TTD)	23688	189.5		1304.84
FEEDWATER ENTERING DRAIN COOLER	465871		372.3	347.33
DRAINS ENTERING	465871		319.0	292.04
DRAINS LEAVING D.C. (10 DEG TD)	34719			356.30
	58407	189.5	329.0	299.96
FEEDWATER PUMP (75.0 PC EFF)				
FEEDWATER LEAVING	465871	1581.7	319.0	292.04
FEEDWATER ENTERING	465871		315.3	285.54
PUMP POWER REQUIRED - KW	954			
AIR HEATER				
FLOW FROM HEATER 3 EXTR.	13547			
FLOW TO HEATER NO. 3	13547	83.88		1228.74
				285.54
HEATER NO. 3 (OPEN)				
TURBINE SHELL CONDITIONS				
STEAM EXTRACTED FROM TURBINE		90.17	795.0	1228.74
STEAM FROM END PACKING	15954			1228.74
STEAM TO HEATER (7 PC DELTA P)	6274			1440.47
FLOW FROM AIR HEATER	22228	83.88		1287.87
FEEDWATER LEAVING	13547			285.54
FEEDWATER ENTERING	465871	83.88	315.3	285.54
DRAINS ENTERING	371687		254.5	223.37
	58407			299.96
HEATER NO. 2 (CLOSED WITH D.C.)				
TURBINE SHELL CONDITIONS				
STEAM TO HEATER (7 PC DELTA P)		87.79	267.8	1165.38
FEEDWATER LEAVING (5 DEG TTD)	24691	85.15		1165.38
FEEDWATER ENTERING DRAIN COOLER	371687		254.5	223.37
DRAINS LEAVING D.C. (10 DEG TD)	371687		188.8	157.85
	24691	85.15	198.8	166.90
HEATER NO. 1 (CLOSED WITH D.C.)				
TURBINE SHELL CONDITIONS				
STEAM EXTRACTED FROM TURBINE		10.88	197.2	1090.16
STEAM FROM STEAM SEAL SYSTEM	22426	10.88		1090.16
EXTRACTION STEAM (7 PC DELTA P)	536			1448.96
FEEDWATER LEAVING (5 DEG TTD)	22963	10.12		1098.54
FEEDWATER ENTERING DRAIN COOLER	371687		188.8	157.85
DRAINS ENTERING	371687		122.7	91.01
DRAINS LEAVING D.C. (10 DEG TD)	24691			166.90
	47653	10.12	132.7	100.72
STEAM SEAL SYSTEM				
LEAKOFF STEAM FROM PACKINGS	1186	15.70		1448.96
MAKEUP STEAM FROM BOILER	0			1468.13
SEAL STEAM TO L.P. PACKINGS	650	15.70		1448.96
STEAM TO HEATER NO. 1 EXTR.	536	10.88		1448.96
AIR EJECTOR				
STEAM FROM BOILER	750			1468.13
FEEDWATER LEAVING	371687		122.7	91.01
FEEDWATER ENTERING	371687		120.7	88.99
DRAINS TO CONDENSER	750			59.70
FEEDWATER PUMP (75.0 PC EFF)				
FEEDWATER LEAVING	371687	120.0	120.7	88.99
FEEDWATER ENTERING	371687		120.6	88.92
CONDENSER				
STEAM TO CONDENSER	369737	1.719		1004.90
DRAINS ENTERING	48403			
FLOW FROM MAKEUP SOURCE	13547			
FEEDWATER LEAVING	371687	1.719	120.6	88.92

I & M I DIV., GENERAL ELECTRIC CO., LYNN, MASS. 01910 6/21/73

LTSR-98258-7

BEST AVAILABLE COPY

INDONESIA

LOCUS OF VALVE POINT HEAT BALANCE

0% BLOWDOWN - 0% TO AIR HEATER

CUSTOMER HEAT RATE = 9331 BTU/KWHR

GROSS HEAT RATE = 9163 BTU/KWHR NET HEAT RATE = 9331 BTU/KWHR

GENERATOR OUTPUT = 5149.8 KW ----- RATED 62500 KVA, .80 P.F., 30 PSIG H2

GENERATOR LOSS = 753 KW FT .82 P.F., 30.0 PSIG H2 FIXED LOSS = 260 KW

STEAM CONDITIONS 1250 PSIG, 950 DEG F, 2.50 IN HGA 3000 RPM

	F LBS/HR	P PSIA	T F	H BTU/LB
HEAT SOURCE				
STEAM FROM BOILER				
STEAM TO AIR EJECTOR	451574	1265.7	950.0	1468.13
STEAM TO STEAM SEAL SYSTEM	750			1468.13
BLOWDOWN	0			1468.13
FEEDWATER TO BOILER	0			
	452324		442.9	423.12
TURBINE				
STEAM TO THROTTLE				
VALVE STEM LEAKAGE	451574	1265.7	950.0	1468.13
TO HEATER NO. 4 EXTR.				
TO STEAM SEAL SYSTEM	1441	205.5		1468.13
GOVERNING STAGE EXIT	367	157.70		1468.13
END PACKING LEAKAGE		86.5		1440.47
TO HEATER NO. 3 EXTR.				
TO STEAM SEAL SYSTEM	6233	94.68		1440.47
LAST STAGE FLOW	864	15.70		1440.47
EXPANSION LINE END POINT	320032	1.228		992.84
LAST STAGE TS 1 X 20				983.42
HEATER NO. 5 (CLOSED WITH D.C.)				
TURBINE SHELL CONDITIONS				
STEAM TO HEATER (7 PC DELTA P)		444.9	714.5	1368.85
FEEDWATER LEAVING (5 DEG TTD)	33546	415.8		1368.85
FEEDWATER ENTERING DRAIN COOLER	452324		442.9	423.12
DRAINS LEAVING D.C. (10 DEG TD)	452324		373.0	348.08
	33546	415.8	383.0	357.05
HEATER NO. 4 (CLOSED WITH D.C.)				
TURBINE SHELL CONDITIONS				
STEAM EXTRACTED FROM TURBINE		205.5	548.6	1295.00
STEAM FROM VALVE STEM PACKING	20446	205.5		1295.00
EXTRACTION STEAM (7 PC DELTA P)	1441			1468.13
FEEDWATER LEAVING (5 DEG TTD)	21887	191.1		1306.40
FEEDWATER ENTERING DRAIN COOLER	452324		373.0	348.08
DRAINS ENTERING	452324		322.5	295.58
DRAINS LEAVING D.C. (10 DEG TD)	33546			357.05
	55433	191.1	332.5	303.95
FEEDWATER PUMP (75.0 PC EFF)				
FEEDWATER LEAVING				
FEEDWATER ENTERING	452324	1581.7	322.5	295.58
PUMP POWER REQUIRED - KW	452324		318.7	289.09
	926			
AIR HEATER				
FLOW FROM HEATER 3 EXTR.				
FLOW TO HEATER NO. 3	0			
	0	88.05		1230.90
				289.09

HEATER NO. 3 (OPEN)				
TURBINE SHELL CONDITIONS				
STEAM EXTRACTED FROM TURBINE		94.68	604.5	1230.90
STEAM FROM END PACKING	16483			1230.90
STEAM TO HEATER (7 PC DELTA P)	6233			1440.47
FLOW FROM AIR HEATER	22717	88.05		1288.12
FEEDWATER LEAVING	0			289.09
FEEDWATER ENTERING	452324	88.05	318.7	289.09
DRAINS ENTERING	374174		257.4	228.29
	55433			385.95
HEATER NO. 2 (CLOSED WITH D.C.)				
TURBINE SHELL CONDITIONS				
STEAM TO HEATER (7 PC DELTA P)		89.67	266.8	1168.47
FEEDWATER LEAVING (5 DEG TTD)	25255	86.89		1168.47
FEEDWATER ENTERING DRAIN COOLER	374174		257.4	228.29
DRAINS LEAVING D.C. (10 DEG TD)	374174		190.5	158.01
	25255	86.89	200.5	168.86
HEATER NO. 1 (CLOSED WITH D.C.)				
TURBINE SHELL CONDITIONS				
STEAM EXTRACTED FROM TURBINE		11.29	199.0	1092.22
STEAM FROM STEAM SEAL SYSTEM	26907	11.29		1092.22
EXTRACTION STEAM (7 PC DELTA P)	581			1440.72
FEEDWATER LEAVING (5 DEG TTD)	27487	10.50		1099.95
FEEDWATER ENTERING DRAIN COOLER	374174		190.5	158.01
DRAINS ENTERING	374174		110.9	79.16
DRAINS LEAVING D.C. (10 DEG TD)	25255			168.86
	52742	10.50	120.9	88.86
STEAM SEAL SYSTEM				
LEAKOFF STEAM FROM PACKINGS	1231	15.70		1440.72
MAKEUP STEAM FROM BOILER	0			1468.13
SEAL STEAM TO L.P. PACKINGS	650	15.70		1440.72
STEAM TO HEATER NO. 1 EXTR.	581	11.29		1440.72
AIR EJECTOR				
STEAM FROM BOILER	750			1468.13
FEEDWATER LEAVING	374174		110.9	79.16
FEEDWATER ENTERING	374174		108.9	77.16
DRAINS TO CONDENSER	750			59.70
FEEDWATER PUMP (75.0 PC EFF)				
FEEDWATER LEAVING	374174	1201.0	108.9	77.16
FEEDWATER ENTERING	374174		108.7	76.89
CONDENSER				
STEAM TO CONDENSER	320682	1.228		998.76
DRAINS ENTERING	53492			
FLOW FROM MAKEUP SOURCE	0			
FEEDWATER LEAVING	374174	1.228	108.7	76.89

I & M DIV., GENERAL ELECTRIC CO., LYNN, MASS. D1930 6/27/73

LTSD-00298-6

BEST AVAILABLE COPY

GENERAL ELECTRIC
COMPANY

GUARANTEED PERFORMANCE SPECIFICATIONS for GENERATOR and EXCITER

FOR: PERUSAHAAN UMUM LISTRIK NEGARA
SEMERANG STEAM PLANT UNITS 1 AND 2

SPECIFICATION NO. LTSD-9825B
PROPOSITION NO. 247-E-5002

SYNCHRONOUS GENERATOR - HYDROGEN-COOLED

GENERATOR RATING AT 30 PSIG HYDROGEN

KVA	POWER FACTOR	KW	RPM	NO. POLES	PHASE	CYCLES	VOLTS	AMPERES	CONNECTIONS
62500	0.8	50000	3000	2	3	50	11500	3138	WYE

The stator and rotor insulation will be Class B

Short Circuit Ratio not less than 0.58

EXCITER RATING

TYPE	KILOWATTS	RPM	VOLTS	AMPERES	CONNECTIONS
STATIC	200	-	250	800	-

TOTAL TEMPERATURE

TOTAL TEMPERATURE °C NOT TO EXCEED		
STATOR COILS	COLLECTOR	FIELD COILS
BY TEMPERATURE DETECTOR	BY THERMOMETER	BY RESISTANCE
91	125	125

COOLING WATER

AMOUNT	MAXIMUM TEMP.	HEAD LOSS
GPM	DEG. F	FT WATER
550	95	14.0

DIELECTRIC TESTS

BETWEEN COILS AND FRAME A-C VOLTAGE FOR 1 MINUTE	
STATOR	FIELD
23500	2500

EXCITATION

MAXIMUM REQUIRED	
KW	VOLTS
192	250

The rating, total temperature, and dielectric tests are in accord with American Standards C50.13 - 1965

The total temperature is based on supplying the gas cooler with water as specified above.

The performance and total temperature of the generator is based on continuous operation with cooling hydrogen at a pressure of 30 psig.

 Date: 10/5/73 - JDM

GENERAL ELECTRIC
COMPANY

GUARANTEED PERFORMANCE SPECIFICATIONS for GENERATOR and EXCITER

FOR: PERUSAHAAN UMUM LISTRIK NEGARA
SEMARANG STEAM POWER PLANT
UNITS 1 AND 2

SPECIFICATION NO. LTSD-9825B
PROPOSITION NO. 247-E-5002

SYNCHRONOUS GENERATOR - HYDROGEN-COOLED

GENERATOR RATING AT 30 PSIG HYDROGEN

KVA	POWER FACTOR	KW	RPM	NO. POLES	PHASE	CYCLES	VOLTS	AMPERES	CONNECTIONS
62500	0.80	50000	3000	2	3	50	11500	3138	WYE

The stator and rotor insulation will be Class B

Short Circuit Ratio not less than 0.58

EXCITER RATING

TYPE	KILOWATTS	RPM	VOLTS	AMPERES	CONNECTIONS
Gear Driven	200	1785	250	800	Differential Compound
Pilot	7.5	1785	250	30	Compound

TOTAL TEMPERATURE

TOTAL TEMPERATURE °C NOT TO EXCEED		
STATOR COILS	COLLECTOR	FIELD COILS
BY TEMPERATURE DETECTOR	BY THERMOMETER	BY RESISTANCE
91	125	125

COOLING WATER

AMOUNT	MAXIMUM TEMP.	HEAD LOSS
GPM	DEG. F	FT WATER
550	95	14.0

DIELECTRIC TESTS

BETWEEN COILS AND FRAME A-C VOLTAGE FOR 1 MINUTE	
STATOR	FIELD
23500	2500

EXCITATION

MAXIMUM REQUIRED	
KW	VOLTS
192	250

The rating, total temperature, and dielectric tests are in accord with American Standards C50.13 - 1965

The total temperature is based on supplying the gas cooler with water as specified above.

The performance and total temperature of the generator is based on continuous operation with cooling hydrogen at a pressure of 30 psig.

 Date: 10/5/73 - JDM

ESTIMATED SATURATION AND SYNCHRONOUS IMPEDANCE CURVES

FOR GENERATOR RATED 62500 KVA - 3000 RPM - 11500 VOLTS - .80 PF
3138 ARM AMPS - .58 SCR - 30 PSIG H2 - 250 VOLTS EXCITATION

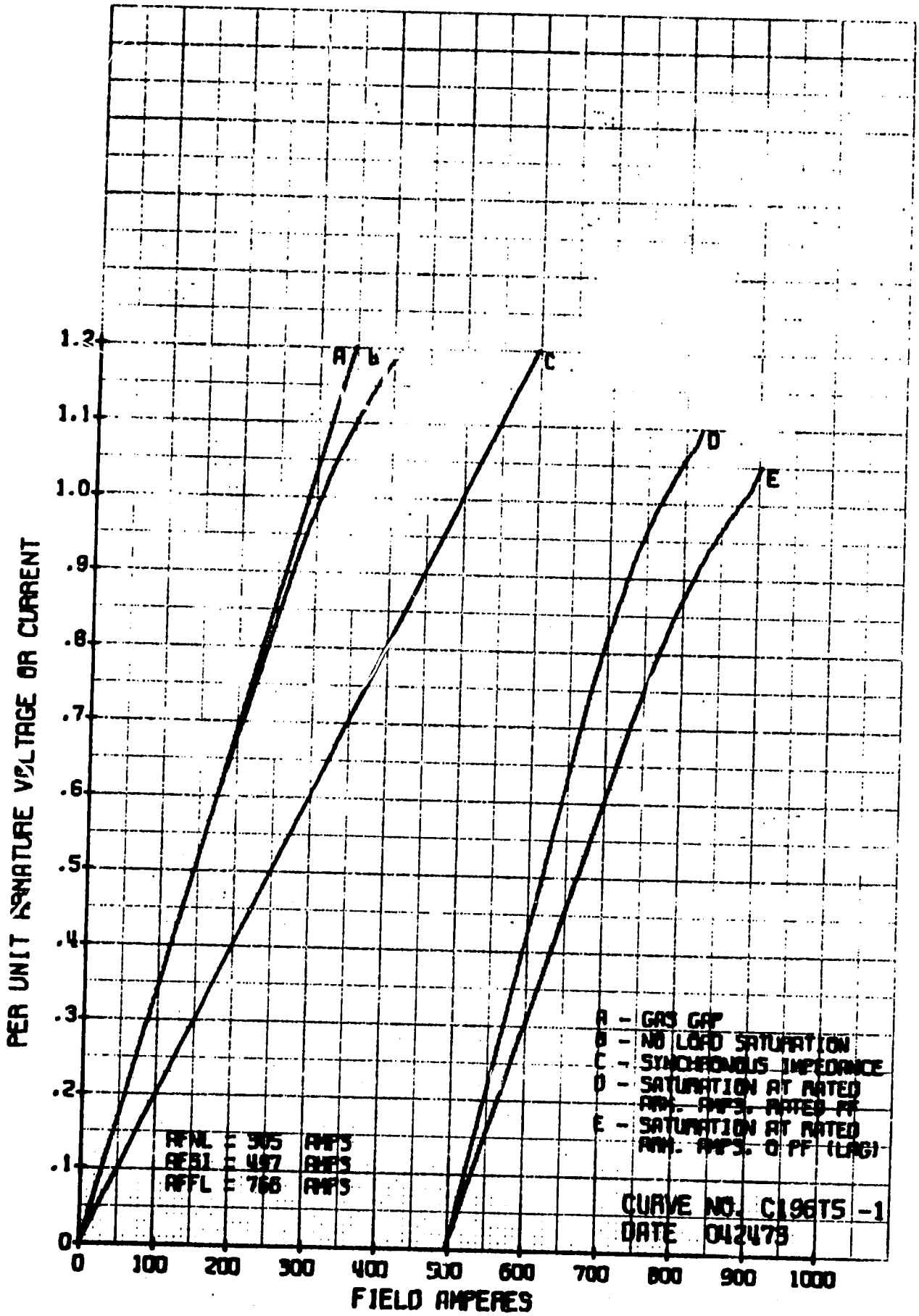

ESTIMATED REACTIVE CAPABILITY CURVES

FOR GENERATOR RATED 62500 KVA - 3000 RPM - 11500 VOLTS - .80 P.F.
3138 RAM AMPS - .58 SCR - 30 PSIG H2 - 250 VOLTS EXCITATION

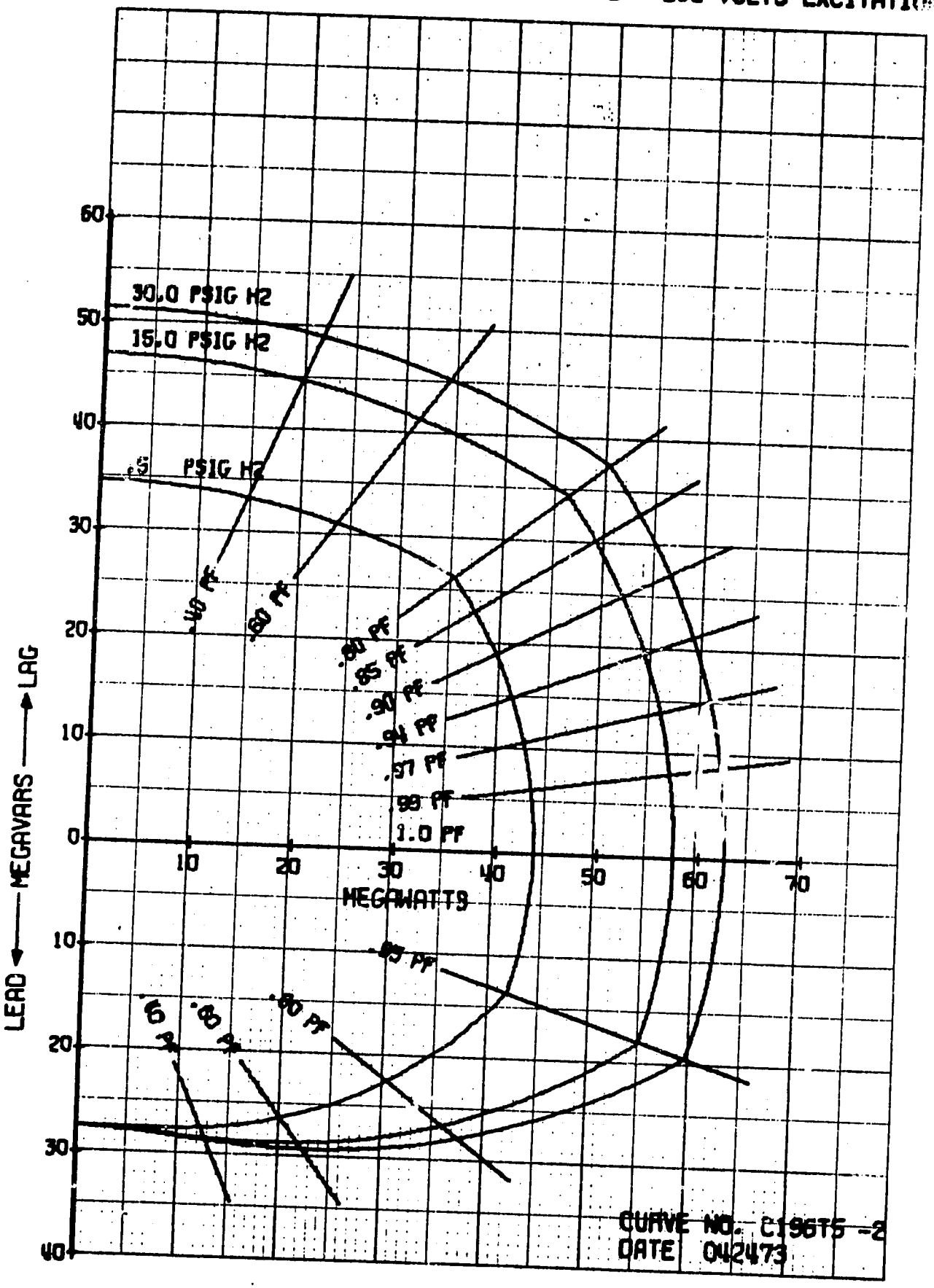

FOR GENERATOR RATED 62500 KVA - 3000 RPM - 11500 VOLTS - .80 PF
3130 ARM AMPS - .58 SCR - 30 PSIG H2 - 250 VOLTS EXCITATION

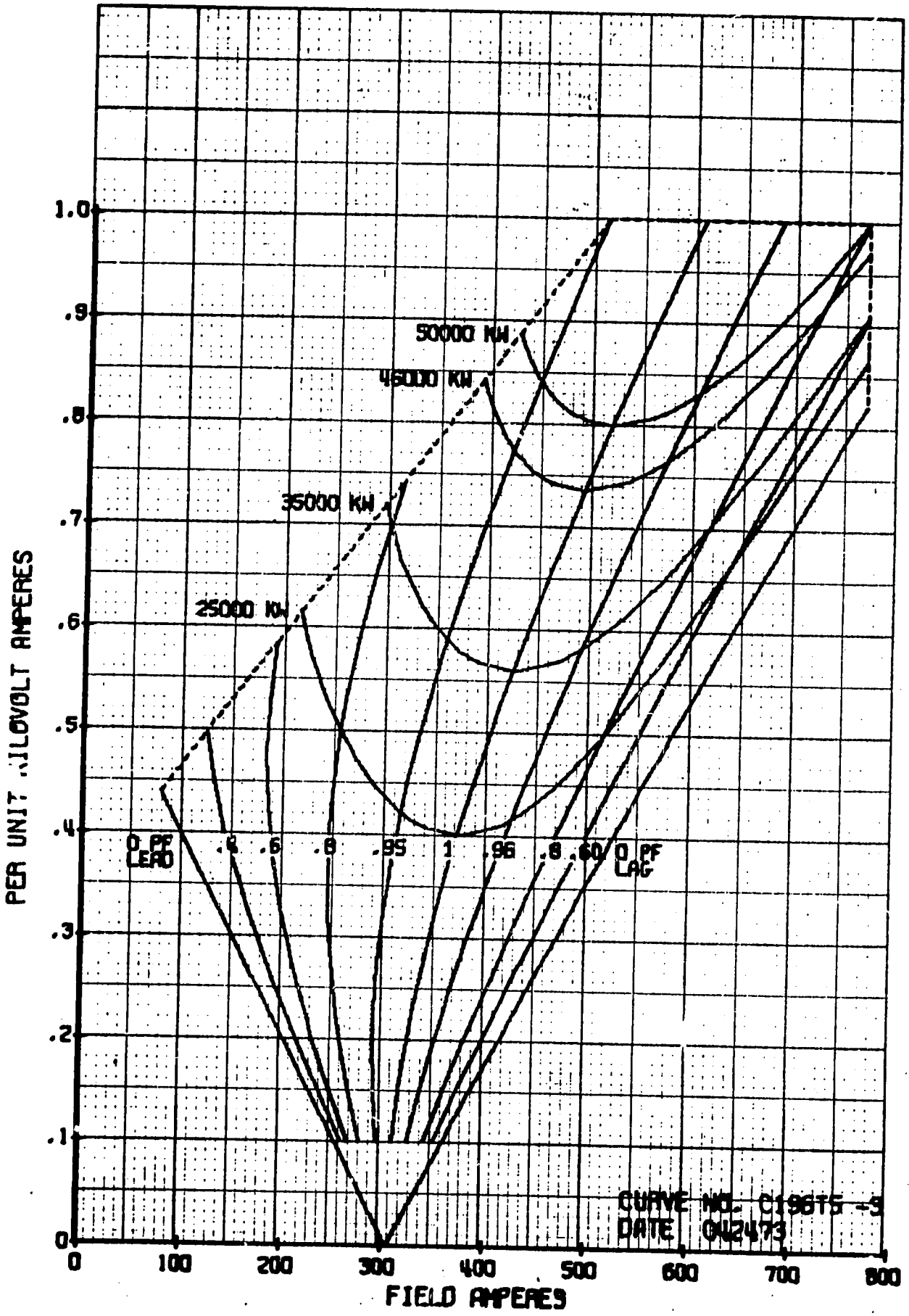

SPECIFICATION FOR GENERATOR

Turbine-driven synchronous generators are rated at the maximum kva, kw, and minimum associated overexcited power factor that they are guaranteed to deliver while simultaneously meeting all other conditions of guarantee.

Temperature Guarantees

The generator ratings are made on the basis of continuous operation with guaranteed maximum temperatures as listed under Basic Generator Features and Accessories. The guaranteed maximum temperatures are based on supplying the required flow of cooling water at a temperature of 95 F or lower, and the maintenance of the specified casing pressure for hydrogen-cooled generators.

Allowable Terminal Voltage Variations

The generator is suitable for operation at rated kva, power factor and frequency at any voltage not more than 5 percent above or below rated voltage, but not necessarily in accordance with the standards of performance established for operation at normal rating.

Short-circuit Ratio

The short-circuit ratio is the ratio of the field ampere-turns required to produce rated voltage at no load, at rated frequency, to the field ampere-turns required to produce rated armature current at sustained short circuit.

The standard short-circuit ratio for the listed generators will not be less than 0.58.

Capability for Short Time Abnormal Conditions

1. Thermal

a. Balanced Currents

(1) Stator

The generator armature shall be capable of operating at 130 percent of rated armature current for at least one minute, starting from stabilized temperatures at rated conditions. The permissible armature currents at times up to 120 seconds are:

Time (seconds)	10	30	60	120
Armature current (percent)	226	154	130	116

Because armature temperatures will exceed rated load values under these conditions, the machine construction is based upon the assumption that the number of such operations at armature currents to the above limits will occur not more than two times per year.

(2) Rotor

The generator field winding shall be capable of operating at a field voltage of 125 percent of rated-load field voltage for at least one minute starting from stabilized temperatures at rated conditions. The permissible field voltages at times up to 120 seconds are:

Time (seconds)	10	30	60	120
Field voltage (percent)	208	146	125	112

Because field winding temperatures under these conditions will exceed rated-load values, the machine construction is based upon the assumption that the number of such operations at field voltages to the above limits will occur not more than two times per year.

b. Unbalanced Currents

The generator will be capable of withstanding, without injury, the effects of unbalanced currents for times up to 120 seconds, provided the integrated product (I_2^2t) of generator negative phase sequence current (I_2) and time (t) does not exceed 30. Negative phase sequence current is expressed in per unit of rated stator current, and time in seconds.

2. Mechanical

The generator will be capable of withstanding without mechanical injury, any type of short circuit at its terminals for times not exceeding the short-time thermal capabilities, when operating at rated kva and power factor and five percent overvoltage, provided the maximum phase current is limited by external means to a value which does not exceed the maximum phase current obtained from the three phase fault.

In the case of stator windings, the criterion for no injury is that the windings will satisfactorily withstand a normal maintenance high potential test. There will also be no visible abnormal deformation or damage to the winding coils and connections.

Excitation Ceiling Voltage

The excitation system will be wide-range stabilized to permit stable operation down to 25 percent of rated excitation voltage on hand control. The excitation ceiling voltage obtainable by hand control will be at least 120 percent of rated voltage when operating with a load resistance equal to the generator field. The turbine-generator excitation system will be capable of supplying ceiling excitation under load for at least one minute. The main exciter response ratio as defined by ANSI Standard C42.10-1957 will be at least 0.5.

Wave Shape

The deviation factor of the open-circuit terminal voltage wave of a turbine-generator will not exceed 10 percent.

The deviation factor of a wave is the ratio of the maximum difference between corresponding ordinates of the wave and of the equivalent sine wave to the maximum ordinate of the equivalent sine wave when the waves are superposed in such a way as to make this maximum difference as small as possible.

Telephone Influence Factor

The balanced telephone influence factor and the residual component telephone influence factor of turbine-generators in the listed sizes will meet the latest NEMA and ANSI standards as applicable.

Generator Tests

The generator will be given standard factory tests which will include the following unless specifically waived:

a. Mechanical inspection.

b. Mechanical balance.

c. Measurement of cold resistance of armature and field windings.

d. Insulation resistance measurements.

e. Dielectric tests.

(1) Armature - The standard test voltage shall be an alternating voltage whose effective value is 1000 volts plus twice the rated voltage of the generator. This test shall be applied for 60 seconds' duration immediately prior to shipment of the generator stator.

(2) Field - The standard test voltage shall be an alternating voltage whose effective value will be 10 times the field-rated excitation voltage, but not less than 1500 volts. This test shall be applied for 60 seconds' duration immediately prior to shipment of the generator rotor.

f. Leakage tests for hydrogen-cooled generator.

g. Resistance temperature detector test.

GENERAL ELECTRIC COMPANY

Specification No. LTSD-9825B
Proposition No. 247-E-5002

SPECIFICATIONS FOR
STATIC EXCITATION AND REGULATING EQUIPMENT

A. RATING

1. The rating of the excitation equipment is 200 kw, 250 volts, 800 amps.

2. With one unit of the twin rectifier set removed from operation, the remaining unit will be capable of providing 767 amperes excitation continuously, which corresponds approximately to the following generator output:

62500 KVA @ 0.8 Power Factor.

B. AUTOMATIC REGULATOR OPERATION

1. Steady-State Operation
Means will be provided for adjusting the generator terminal voltage at least ±5% from rated voltage. Variations in the generator load from no load to rated current at rated power factor shall result in a variation of generator terminal voltage, in the steady-state, of not more than 1%.

2. Transient Operation
For a sustained three phase fault at the generator terminals, the excitation system will produce excitation to provide at least 2.0 per unit generator output current.

Excitation system response shall be at least 0.5.

C. MANUAL REGULATOR OPERATION

1. Means are provided for varying the excitation voltage from 25% to 100% of its rated value.

2. With change of generator load, the manual regulator will hold excitation voltage approximately constant.

D. OTHER FEATURES

1. Provision is made for the removal and replacement of individual rectifier elements with the excitation system in operation.

2. Provision is made for removing either the automatic regulator or the manual regulator from service while operating the excitation on the other regulator.

3. Provision is made for starting the excitation system after the generator is running at or within 10% of rated speed. Power for this start-up circuit shall be obtained from a 125 volt D-C source to be furnished by the Purchaser. To start the excitation system, it is necessary to develop about 10% of rated terminal voltage on open circuit to overcome forward voltage drop in the rectifiers.

4. The static excitation system on manual control may be momentarily operated in parallel with a spare rotating exciter of suitable characteristics for the purpose of transferring excitation to or from the rotating exciter under control of a station operator.

GENERAL ELECTRIC COMPANY

Specification No. LTSD-9825B
Proposition No. 247-E-5002

ROTATING EXCITATION AND REGULATING EQUIPMENT

Pilot Exciter Excitation System

One 250 KW, 250 volts, 1785 rpm, shaft-driven exciter.
One 7.5 KW, 250 volts, 1785 rpm, shaft-driven pilot exciter.
One two-section excitation cubicle containing the following:

- Field circuit breaker, drawout type.
- Shunt for field ammeter.
- Field discharge resistor.
- Automatic voltage regulator.
- Reactive current compensator.
- High speed relays.
- Motor-operated exciter field rheostat.
- Hand-operated pilot exciter field rheostat.
- Cross-current compensation.
- Minimum excitation limit.

Devices for remote mounting by Purchaser:

- Control switch for field circuit breaker.
- Control switch for exciter field rheostat.
- Control switch for regulator transfer.
- Voltage adjusting rheostat.

BASIC TURBINE FEATURES AND ACCESSORIES

Emergency Inlet Valve - including switch to actuate main circuit breaker to prevent generator from motoring. Furnished with stop valve with provision for testing while operating, with special hangers and supports as required (excluding supporting steel), and piping between valve and turbine inlet as required. Limit switches (2 N.O. and 2 N.C. contacts) at each end of valve mechanism.

Emergency Trip - including manual trip and reset device and electrically operated d-c solenoid trip. Furnished with an electrically operated reset device.

Steam Strainer - with a removable corrosion-resistant element plus a temporary fine mesh strainer. Strainer integral with stop valve.

Control-valve Gear - multivalve, with hard stem valve packing.

Overspeed Governor - bolt type independent of speed governor. Furnished with oil trip for test.

Provision for Feedwater Heating - air-operated relay-dump valve to operate customer's positive-closing, air-operated, non-return valves in the extraction lines.

Shaft-packing-seal System - multiple gland system to prevent steam escaping or air entering turbine, including spray chamber with necessary piping from sealing glands to spray chamber, and and a-c motor-driven evacuator with the Purchaser to furnish piping from spray chamber to evacuator and beyond. The turbine is provided with an automatic steam-seal regulator and 2-1/2 inch steam-seal pressure gage. Evacuator designed for 0.25 psig maximum discharge pressure. Purchaser to furnish steam-seal system pipe hangers.

Moisture Protection - suitable internal moisture separation in the low-pressure stages, as required by design, to limit the moisture content to an acceptable value.

Thermometers - 3" dial type, bimetallic indicating thermometers and wells for main bearings. Furnished with one exhaust-hood indicating thermometer, and 3" dial thermometer(s) for thrust bearing drain(s).

Exhaust-relief Diaphragm and Electric Low-Vacuum Trip and Alarm Contacts - spare exhaust-relief diaphragm furnished.

Insulation and Lagging - metal lagging for high-temperature parts of the turbine, with sound deadening material sprayed on inside surfaces as required by design. Heat-retention insulation for installation by the Purchaser as follows:

Plastic cement - upper and lower turbine shells, steam valve bodies and exhaust casings, where required. Pre-formed segmented pipe insulation (with either canvas or aluminum jacketing) for all steam piping furnished by General Electric.

Removable aluminum covers filled with block and/or plastic heat-retention material for main stop valves(s), and shells as required by turbine design.

Reusable blankets and/or block insulation for the horizontal and vertical shell-flange joints which must be normally unbolted for disassembly.

Emergency Valve(s) Steam Seal System and Casing Drain Valves - furnished with single set of drain valves, piping to valves, reach rods and handwheels.

Motors - Class B, open drip-proof. Insulation with treatment for powerhouse conditions.

Foundation plates, shims and sub-sole plates where required by grout method (no price change where sub-sole plates are not required). Lagging support plates not included.

Maintenance Tools - all special tools, including box sledging wrenches for bolts and nuts 1-1/2-inch and larger, casing guide pins, jacking bolts and other tools depending on specific turbine construction. Furnished with turbine-casing lifting sling and turbine-rotor lifting sling. If similar or duplicate unit is located in same station, only those slings, tools, and wrenches necessary for the new turbine will be furnished.

Flow Sights (Unlighted) - for journal bearings and thrust bearings.

Thrust-failure Trip Switch (DPST - Trip and Alarm) - for active and inactive faces.

Oil Deflectors - furnished at each bearing.

Shaft-grounding Brush.

Piping - factory treated, prefabricated in shippable assemblies, ready for installation, (field welds by Purchaser) as follows:

Main steam line(s) - connecting the emergency valve(s) and turbine inlet(s).

Steam seal system - all necessary piping connecting the factory supplied turbine-generator components, with the Purchaser to furnish steam supplying piping to the steam seal regulator (when furnished), and piping beyond the spray chamber or exhauster (as furnished).

Oil system - all necessary oil feed and return piping connecting the factory supplied turbine-generator components.

Instruction Books - 25 copies maximum.

Exhaust flange layout template, if required.

MECHANICAL-HYDRAULIC SYSTEM

Constant Speed Governor - oil-relayed type. Furnished with manual load-limit control and mechanical load-limit indicator mounted on turbine front end.

Synchronizing Device - d-c motor and hand-operated with manual release mechanism for overspeed testing with limit switches.

Lubrication Supply Unit - assembly of the following components to supply bearing lubrication and maintain hydrogen shaft seals:

Reservoir with clean out and drain provisions, connection for Purchaser's oil-conditioning equipment, and oil-level indicator (float type oil level indicator with high and low level alarm switches).

Twin Oil Coolers (5/8 inch, 18 BWG, 90-10 copper nickel tubes, 95°F, max. 125 psig water) with transfer valve.

Pumps:

Shaft-driven main oil pump.
A-C motor driven auxiliary oil pump
A-C motor driven bearing and seal oil pump
D-C motor driven emergency bearing and seal oil pump with d-c motor starter

Vapor extractor, motor operated

Pump inlet strainers (one per pump).

Lube oil demister.

Low bearing-oil pressure alarm switch.

Pump local testing.

Pressure switches for automatic sequential start-up and operation of motor-driven pumps.

Bearing pressure regulator.

Thermometer, 3" bimetallic dial-type for temperature of oil leaving coolers.

Oil piping - all external control piping and bearing feed lines in high temperature areas will be guarded.

The standard oil-pumping system does not include hangers for external oil piping or an initial charge of oil. The oil reservoir will be wired at the factory, and all electrical connections on the reservoir, excluding motors, will be made to terminals or terminal boards affixed to the reservoir.

Low-oil pressure Protection - emergency and governing valves will close with loss of hydraulic oil pressure.

Gages - 4-1/2" diameter, hydraulic and bearing pressure gages, mounted on turbine.

Turning Gear - motor-operated, with provision for manual engaging and cranking (including cranking device), engaging lever, signal switches (engaged, disengaged), and bearing pressure interlock.

Speed Indicator - shaft-driven tachometer-generator; indicating instrument mounted on turbine front end.

Acceleration Signal, dual range and meter (for Purchaser's mounting).

Turbine Tests

The following individual component tests will be made at the factory: steam-driven pump regulator test and adjustment (if applied), speed-governor and emergency overspeed-governor test and adjustment, trip-throttle valve or stop valve and/or stop-intercept valve test, and balancing of turbine rotors. The individual turbine sections will be assembled as required by the manufacturer to establish and verify the fits and operating clearances.

Factory running tests with steam are not available.

BASIC GENERATOR FEATURES AND ACCESSORIES

GENERATOR FEATURES

1. The stator frame is of one-piece construction, fabricated from heavy steel plate and designed for minimum noise and vibration.

2. The stator core assembly is mounted on and held firmly in place by key bars located at the outer diameter of the stator core. This construction is used to minimize eddy current losses and reduce the possibility of electrical shorts between laminations.

3. The core punchings are coated with a baked-on combination of varnish and "Santocel" silica powder. This feature serves to minimize the possibility of insulation breakdown between laminations.

4. The generator integral, solid-forged coupling-half provides maximum reliability.

5. The rotors are pole-face balanced to obtain the proper balance in the axial plane and to provide the desired balance at rated speeds.

6. The retaining rings are free of contact with the rotor body. This feature minimizes overheating of the ring from the body eddy currents during unbalanced faults or single-phase operation.

7. The retaining rings have no discontinuities such as ventilating holes. The superior mechanical strength of this construction provides a greater margin of safety.

8. The generator collector rings are spirally grooved to provide minimum brush selectivity and sparking.

9. The constant pressure brush-holder riggings are used with the generator collector rings, eliminating the need to manually adjust brush pressures.

10. The brushes are of the quick-disconnect type for ease of replacement.

GENERATOR ACCESSORIES

Gas Pressure - 30 psig.

Cooling - finned-tube surface gas coolers (5/8 inch, 18 BWG, 90-10 copper nickel tubes, 95 F, 125-psig water, cast iron or fabricated steel (as available) water boxes) mounted vertically in corners of generator.

Stator Insulation - Class B.

Cold Gas Temperature - 46C at 30 psig.

Stator Maximum Temperature - 91C.

Field Insulation - Class B.

Field Maximum Temperature - up to 100,000 kva 125C, 100,000 kva through 210,000 kva - 120C.

Collector Maximum Temperature - 125C.

Temperature Detectors.

Embedded in stator windings - 6.

Coolers - one detector for each cooler inlet and outlet.

One in combined gas stream out of hydrogen coolers, for indicator on hydrogen control cabinet.

Terminals

Six high-voltage bushings with two current transformers per bushing with provision for installation of one additional current transformer per bushing. One terminal for testing bearing insulation.

One terminal for testing seal housing insulation.

Grounding Pads.

Removable appearance lagging from centerline to floor.

Foundation plates, shims and sub-sole plates, where required by grout method (no price change where sub-sole plates are not required).

HYDROGEN SYSTEM

Hydrogen manifold including bottle pressure regulator, high and low pressure gages, shut-off valves, 3 bottle connectors, generator hydrogen pressure regulator assembly (shut-off valves, by-pass line, high and low pressure regulators, and high and low pressure switches).

Carbon dioxide manifold, including pressure gage, shut-off valves, mounting brackets, 4 bottle connectors and purging control valve assembly.

Portable purging gas analyzer.

Carbon steel pipe and weld-type fittings for gas control system piping, except vent lines.

Hydrogen Cabinet

Hydrogen compartment:

Hydrogen pressure gage, with pneumatic transmitter for remote receiver.

Flowmeters for gas analyzer and for total scavenging rate.

Filter-dryer units for gas analyzer and scavenged gas.

Differential fan pressure gage.

Detector cell for gas analyzer.

Gas tight wiring seal into hydrogen electrical compartment.

Complete compartment piping (copper tubing) terminating with pipe adapters at top or bottom of compartment at Purchaser's option.

Hydrogen electrical compartment:

Hydrogen electrical compartment separated from gas compartment by gas-tight partition.

Relay-type electric annunicator with d-c pilot light, alarm contacts, acknowledge and test push buttons.

Generator gas temperature indicator with high temperature alarm contact.

One gas purity analyzer with 0-105 mv output for panel and remote indicators, including the following:

Indicator with one low purity alarm contact.
Milliammeter.
Rheostat.

One relay for loss of d-c supply with contact for remote alarm.

One d-c horn for annunicator alarms.

Fused switches for a-c supply and d-c supply.

Terminal blocks, control wiring, and compartment wiring.

Generator gas purity indicator, electric type, for remote mounting by Purchaser.

SEAL OIL SYSTEM, including:

Seal oil control unit consisting of:

Differential pressure regulating valve with by-pass.

Duplex seal-oil filter, complete with relief by-pass valve, differential pressure gage and switching valve.

Differential pressure alarm switch.

Differential pressure gage.

Float trap, with sight glass and by-pass.

Seal oil flowmeter, with by-pass.

Pump start switch, to signal d-c emergency bearing and seal-oil pump.

Shut-off and isolation valves for operation and maintenance.

Seal drain enlargements, with high-liquid-level detector with alarm switch, and sight glass.

Bearing drain enlargement (auxiliary detraining), with exhauster.

Generator casing liquid detector with alarm switch, and sight glass.

Pressure gages, mounted at generator.

Carbon steel pipe and weld-type fittings for seal-oil system piping, except vent lines.

Special Tools

Steel air gap shim for assembly of rotor.

Protective nonmetallic shim for use under steel air gap shim.

Field shoe for assembly of rotor.

Jacking device for assembly of seal housing.

Rotor lifting cable.

Rotor support sling.

Rotor pull plate.

Set of four removable lifting or jacking trunnions provided on a loan basis, to be returned to factory.

Special wrenches and tools described under Turbine Accessories include those required for the generator. If similar or duplicate unit is located in same station, only those slings, tools, and wrenches necessary for the new generator will be furnished.

STATIC EXCITATION FEATURES AND ACCESSORIES

1. One collector assembly, including:

   One set of permanently mounted brush boxes and brushholder riggings with constant tension springs for collector brushes.

   One set of removable graphite brushes with integral pigtails and disconnecting terminals and one spare set.

   Insulating barrier between negative and positive brushholder assemblies.

   Terminals for Purchaser's cable or busway connection to collector.

   Internal light with external switch.

   Terminal blocks wired to internal devices.

   One collector enclosure, hinged cover with plastic observation window, with air filter (heavy duty, replaceable type) in air inlet. Ventilating arrangement to be determined by the Company.

   Foundation plates, shims, and sub-sole plates, where required by grout method (no price change where sub-sole plates are not required). Furnished with bolts to anchor brushholder rigging and enclosure (supporting sills grouted into foundation not included).

2. Excitation transformers.

   a. Power potential transformers mounted in an enclosure (location as determined by Purchaser). The PPT's require suitable surge protection to be furnished by the Purchaser.

   b. Saturable current transformers mounted (when space is available) in a neutral enclosure suspended from the bottom of the generator. At Purchaser's option, or where required, the SCT's may be mounted in a floor-mounted enclosure at a location determined by the Purchaser. Enclosure has provision for free ventilation (forced, fan, as determined by the Company).

3. **Neutral enclosure.**

   a. If the SCT's are suspended from the generator, a neutral enclosure will be provided, which will house the SCT's and the neutral tie will be provided. The enclosure will not house the generator neutral terminals. The enclosure will have provision for connecting the Purchaser's neutral take-away cable and for mounting instrument current transformers.

   b. Floor mounted SCT's will have an enclosure with the same features as listed above.

4. Excitation Cubicle, metal enclosed, with natural ventilation and including:

   a. One field breaker section, including:

      One generator field breaker, Type AKF, with electric close and trip, two auxiliary contacts closed in trip position, and three sets of Form C contacts. One field discharge resistor.

      Space for addition of one field breaker assembly.

      One field ground detector.

      One field current shunt with space for two additional shunts.

      One internal light.

   b. One voltage regulator section, including:

      One automatic a-c voltage regulator with reactive current compensator.

      One excitation system, start-up circuit, to be energized from Purchaser's 125 or 250 volt d-c bus.

      One d-c voltage regulator, for control of generator field voltage.

4. b. One meter panel with appropriate meters for servicing regulator equipment.

One maximum excitation limit equipment.

One internal light, convenience outlet and switch for all lights in cubicle.

NOTE: Voltage regulator requires input signal from one instrument C.T. and two instrument P.T.'s which are not included with the voltage regulator.

c. One rectifier section, including:

Independent three phase, full-wave bridge rectifier assemblies (air-cooled, 50 C ambient).

Isolating disconnects, manually operated, for each rectifier bridge assembly.

Thyrite resistor assembly connected across output terminals.

d. Devices for remote mounting by Purchaser:

One voltage regulator transfer switch, with indicating lights for Auto, Test, Man, Start-up.

One transfer voltmeter, zero center.

One switch and indicating lights for motor operated voltage adjuster

One field breaker control switch with indicating lights for Close and Trip.

One control switch for d-c voltage regulator for control of generator field voltage, with three indicating lights.

5. The collector assembly is provided with one negative and one positive field voltage lead with fuses, connected to brush-holder bus rings.

6. Hydrogen escape vent in collector enclosure.

7. Mounted in excitation cubicle:

   a. Underexcited reactive ampere limit.
   b. Volts per Hertz protection equipment.
   c. Motor operated voltage adjuster.
   d. One field current isolating transformer (for 375 field volt units).
   e. One field voltage isolating transformer (for 375 field volt units).

   f. Polarity reversing links.
   g. Drawout type field breaker.

8. When excitation current transformers are suspended from the generator, the neutral enclosure is extended to enclose the generator neutral terminals.

9. Air filter is washable, impingement type.

10. RTD's for air entering and air leaving collector enclosure.

COMPONENT TEST PROGRAM

The standard factory test program is based upon a sub-assembly or component test concept. The component test program is integrated into a quality system consisting of:

(1) incoming inspection and materials release

(2) casting and fabrication inspection and non-destructive testing

(3) in process and final parts inspection

(4) detailed sub-assembly and unit assembly inspection

Component tests concentrate on functional settings and adequacy using special test facilities.

The tabulation of tests which follows is representative of those which cover the complete line of turbines and generators manufactured by MSTGPD. The list is, therefore, all inclusive and requires editing relative to a specific turbine generator order.

Turbine steam spin tests and generator load tests are not conducted unless the unit incorporates a special or advance design feature, or if there is a specific contract commitment.

1.0 TURBINE COMPONENT TESTS

1.1 High Pressure Head Hydrostatic Test

Prior to finish machining, the upper and lower halves of the high pressure head are bolted together and given a water hydrostatic test. Blanking plates are used to sectionalize the head to permit testing in accordance with the operating inlet pressure rating and average stage section pressures. The inlet portion is subjected to one and one-half times rated operating inlet pressure. Multiple stage groups are tested at one and one-half times the pressure specified on the high pressure head drawing.

1.2 Centrifugal Pump - Main Shaft Driven - Capacity Test

The main centrifugal pump is tested at reduced speed and its capacity and pressure determined and compared against a standard curve. This test insures that the main pump will deliver a sufficient flow of oil at the correct pressure when installed in a unit.

1.3 Geared Oil Pump - Main Shaft Driven - Operational Test

These pumps are fully assembled and operated on a test stand driven by an electric motor. Capacity tests at rated pressure are run for a period of several hours. The noise level of the pump is checked. After test, the pumps are disassembled to check gear contact if necessary.

1.4 Speed Governor

The speed governor is assembled on a special spin test stand. Necessary adjustments are made and the characteristics of speed vs. travel of the pilot valve are recorded and compared to a standard curve for acceptance. This is done both in an increased speed and a decreased speed direction throughout its range to insure that there is no excess friction in the assembly.

1.5 Emergency Governor

The emergency governor is assembled on a special spin test stand and adjustments made so that the trip will occur at the specified speed required for the unit. These governors are also balanced on a test stand and then assembled to the turbine rotor.

COMPONENT TEST PROGRAM (Cont'd.)

1.6 Pressure Governor - Initial, Extraction or Exhaust

Each regulator is set on an oil test stand and the operating characteristics are checked. The mechanism is adjusted and set per design specifications.

1.7 Extraction Governor Control Mechanism (three-arm)

The three-arm is assembled to the pressure governor or governors. The complete assembly is then set on an oil test stand. The integrated operating characteristics of the control mechanism are adjusted and set to design specifications.

1.8 Inlet Stop Valve

Stop valves are tested to determine the operating characteristics of the oil mechanism and to perform hydrostatic tests on steam parts; main disc is checked for leakage at rated steam pressure, valve body and stem seal at twice rated pressure.

1.9 Steam Seal Regulator

The regulator is set on an oil test stand. The operating characteristics are checked, and the mechanism is adjusted and set per design specifications.

1.10 Rotor Dynamic Balance

The turbine rotor is set up in a separate test facility, connected to a test turbine drive and necessary balance refinement is accomplished.

If the turbine has a tandem rotor, each section is run separately. A combined test is not conducted nor considered necessary, since separate balancing accomplishes the same result with a less complicated test facility. The high and low pressure rotor coupling make-up is given very close attention during assembly to assure that it is proper.

COMPONENT TEST PROGRAM (Cont'd.)

1.11 Rotor Heat Indication Test

The effect of ambient temperature changes on the dimensional stability and running balance of the turbine rotor is evaluated as follows: The shaft forging is placed in a furnace and rotated at approximately two R.P.M. The shaft is heated above operating temperature, but below the material transition temperature, and indicator runout readings are taken at several points along the shaft. The runout is also checked prior to heating. The differential runout is compared to engineering standards.

It should be noted that the heat indication test is conducted at least twice; once in the vendor's plant before the forging is released and the second time in our factory prior to final machining.

2.0 GENERATOR COMPONENT TESTS

2.1 Insulation Resistance of Stator and Field

The insulation resistance and polarization index of the armature and field windings are measured and recorded. Polarization index is the ratio of the ten minute to one minute resistance reading. A combination of low insulation resistance readings and a low polarization index may be an indication of excessive moisture, which in the factory is cause for drying out prior to performing the high potential tests for the armature or field.

2.2 Cold Resistances

The cold resistances of the armature and field is measured and compared to calculated resistances to assure that the connections are properly made.

2.3 RTD Test

This test is a check for proper connections and the absence of grounds or open circuits by measuring temperature of each RTD and comparing with thermometers held against the windings or core.

COMPONENT TEST PROGRAM (Cont'd.)

2.4 Air Test of Hydrogen Cooled Stator Frames

The purpose of this test is to check the stator frame for leakage at all joints and welds, and to assure that there are no leakage paths in any steel plates used in the manufacture of the frame. All air tight joints are made up. All piping connections are blanked.

The stator frame is pressurized with air and preliminary leakage checks conducted using liquid soap solution. Freon is injected to the required test pressure level. Leakage checks are conducted using a Halide type leak detector. Once leaks are eliminated, a twelve hour pressure drop check is conducted using a mercury manometer as the pressure indicating medium. Periodic loss of pressure checks are made to assure that leakage is non-existent. If leakage occurs, the location is determined and repairs made.

2.5 Strip Heaters

In some cases, customers order heaters inside of air cooled generators when the unit is to be installed in an area of extremely high relative humidity. The heaters are connected to rated voltage and a heat run conducted.

2.6 High Potential Test - Armature and Field

The high-potential test involves the application of a test voltage, higher than rated voltage, to determine whether the insulation and spacing of conductors is adequate. Unless otherwise specified in manufacturing instructions, the test voltage shall be in accordance with A.S.A. Standards: a 60 cycle sinusoidal voltage of 1000 volts plus twice rated voltage on new armatures, and ten times rated exciter voltage, but not less than 1500 volts a.c. for one minute on new generator fields. Thus, a 125 volt field must be tested at 1500 volts, while a 250 volt field must be tested at 2500 volts.

2.7 Generator Field Balance and Overspeed

The field is balanced and given an overspeed run a separate balance facility. Overspeed is at design trip speed. A 120% overspeed is not normally conducted.

SPECIAL ACCESSORIES

1. Foundation Bolts for Turbine and Generator.
2. 4-1/2 Inch Dial remote reading type thermometer without alarm contacts.
3. 1 Set of Polyester base diazo photolithic reproducible copies.
4. 1 Set of Microfilm negatives of final, approved drawings, 35 mm.
5. TEFC motors, with heaters where applicable.

*6. Test Connections.

7. 2 Additional limit switches with 1NC, 1NO contact.

*8. Manual Emergency Governor exerciser.

9. Initial Pressure control with pressure setting handwheel, mechanical adjustment for pressure regulation, out-of-action control and a shut-off valve in sensing line.
10. Three (3) Pump running switches for Auxiliary Oil Pump; Bearing and Seal Oil pump; and Emergency Bearing and Seal Oil Pump.
11. Additional air-operated relay dump valve.
12. Low Bearing Oil Pressure Trip and simultaneous alarm.
13. Three (3) signal switches with 1NO, 1NC contact for control valve position.
14. Turning Gear Panel, with SB switches and lights for turning gear motor and bearing oil pump, mounted on turbine.
15. One set motor operated drain valves.
16. Two (2) Thrust Face wear, 1 - active, 1 - inactive.

* Deleted. See Basis of Contract Award

SPECIAL ACCESSORIES (Cont'd.)

17. Piping between spray chamber and collecting tank.

18. Hangers for oil, gas and hydraulic fluid piping.

19. One (1) set of Valves for double Valving of all drains and pressure sensing connections.

20. Temporary steam blow-down cover plates for main stop valves and stop-intercept valves.

21. Seven (7) Thermocuples for oil discharge connections, oil into coolers and oil out of coolers.

22. Four (4) Thrust bearing metal thermocouples (active and inactive).

* 23. Four (4) control start thermocouples.

24. One (1) additional electric-type speed indicator.

25. One (1) TSI system including recorders for shaft vibration, speed and valve position, and eccentricity.

26. One (1) Thermometer for Vacuum Pump discharge provided loose for Purchaser mounting.

* 27. One (1) additional exhaust hood thermometer.

28. T-316 Stainless Steel Thermowells for all thermocouples and thermometers.

29. One (1) terminal box for Seal Oil Control Unit including mounting.

* 30. One (1) additional Hydrogen (low) Pressure pneumatic receiver gauge.

31. Low Hydrogen Pressure pneumatic transmitter and receiver gauge (gauge mounted by Purchaser).

* 32. Special sub-bases for Gland Seal Blower and Bearing Drain Enlargement including spill lip, drain boss and plug.

* Deleted. See Basis of Contract Award

SPECIAL ACCESSORIES (Cont'd.)

33. Special Covers and binders for instruction books as specified.

34. Bowser oil conditioner with continuous by-pass including motor-driven pump and over flow sight glass and piping and drip pan.

35. One (1) Additional blower for gland seal system.

36. Manual vacuum breaker valve.

37. One (1) initial change of oil for Lubrication system.

* 38. Supply of one removable plate for space heater installation in generator. On hydrogen generators, space heaters must be removed and plate resealed prior to hydrogen admission due to the danger of explosion.

* 39. Two (2) coats of enamel finish paint on the excitation system.

40. Six (6) additional coil RTD's.

41. Four (4) additional CT's and Calibration of 3 CT's.

42. CT terminal box supplied loose for Purchaser mounting.

43. Neutral grounding transformer including continuous rated resistor and transformer, and a voltage relay.

* Deleted. See Basis of Contract Award

GENERAL ELECTRIC COMPANY

Specification No. LTSD-9825B
Proposition No. 247-E-5002

COMMENTS

1. The Medium Steam Turbine Generator Department of the General Electric Company affirms that is regularly engaged in the manufacture of Turbine-Generator units of similar type size and design as those proposed. Further, it is affirmed that a major change of policy or ownership is not anticipated, that adequate manufacturing capacity is available, and that adequate technical knowledge and practical experience is available.

2. It is our intent to comply with the all technical details of the Specification wherever possible. Due to the timing, however, we have not confirmed the availability of all special requirements of the Specification as it relates to certain equipment sourced from vendors.

   In the event we are the successful bidder, we intend to incorporate the customer Specifications into our Vendor orders where applicable to obtain maximum compliance with these Specifications.

GENERAL ELECTRIC

INTERNATIONAL SALES DIVISION

GENERAL ELECTRIC COMPANY, 159 MADISON AVE., NEW YORK, N. Y. 10016, U.S.A.

HOB - 7865

February 5, 1974

Perusahaan Umum Listrik Negara
Jalan Sunan Ngampel 1
Kebajoran Baru
Jakarta, Indonesia

RECEIVED
FEB 7 1974
BLACK & VEATCH INTERNATIONAL

Attention: Ir. Bagoes Moedijantoro
Director of Construction

Re: Semarang Steam Power Plant
Units 1 and 2
Specification 6104-M-10A
GE Proposal No. 247-E-5002

Gentlemen:

During a meeting which we had with Black and Veatch in their office in Kansas City on 12/3/74, we provided them with certain information relative to the pricing of the turbine generators offered to you in our proposal dated 10/5/73. At this time we are pleased to confirm to you the following information given to Black and Veatch.

A. Special Accessories

Pages 32, 33, 34 of our turbine generator Specification No. LTSD-9825B list 43 items of "Special Accessories" which were included for each turbine generator in compliance with the requirements of your Specification 6104-M-10A. We are attaching a copy of said Pages 32, 33 and 34 on which we have inserted the net selling price for each special accessory on a per unit basis.

B. Excitation System

Our proposal included a rotating exciter in accordance with the requirements of your specification. If our standard static excitation system would be acceptable, the price could be reduced.

Net Price reduction per unit - $46,010

Phone 212 750-2000 | Cable INGECO NEW YORK

C. **Power Factor**

In accordance with your specification, the generator was rated 62,500 KVA, 0.8 PF. If you desire we can furnish a 62,500 KVA generator at 0.85 PF.

Net Price reduction per unit - $13,333

D. Generator KVA

In the event you desire to change the rating of the generator from 62,500 KVA to 60,000 KVA, this can be accomplished at:

Net Price reduction per unit - $19,200

E. Terminal Boxes

In accordance with your specifications, terminal boxes were quoted with 25% extra space. If this 25% extra space is not required:

Net Price reduction per unit - $ 2,912

F. Supply of Equipment Only

If you desire, we are prepared to furnish only the equipment included under Item C.1, delivered FAS Vessel, New York at:

Lot Net Price - $4,698,000

This price for equipment only is predicated upon:

1) The appropriate technical advisory services being purchased directly from General Electric Technical Services Company, Inc.

2) Ocean freight and insurance (Item C.2) being handled by others.

3) Erection (Item C.3) being handled by others.

We sincerely trust that this information will satisfy your requirements and that we will be favored with your order for the turbine generator required for your Semarang Power Plant.

Very truly yours,

H. J. O'Brien
Headquarters Sales Manager
Power Plant Project
Sales Support

HOB/mm
Att.

GENERAL ELECTRIC COMPANY

Specification No. LTSD-9825B
Proposition No. 247-E-5002

SPECIAL ACCESSORIES

		Net Price Per Unit
1.	Foundation Bolts for Turbine and Generator.	$1600
2.	4-1/2 Inch Dial remote reading type thermometer without alarm contacts.	205
3.	1 Set of Polyester base diazo photolithic reproducible copies.	320
4.	1 Set of Microfilm negatives of final, approved drawings, 35 mm.	2112
5.	TEFC motors, with heaters where applicable.	3584
6.	Test Connections.	4480
7.	2 Additional limit switches with 1NC, 1NO contact.	294
8.	Manual Emergency Governor exerciser.	3840
9.	Initial Pressure control with pressure setting handwheel, mechanical adjustment for pressure regulation, out-of-action control and a shut-off valve in sensing line.	5760
10.	Three (3) Pump running switches for Auxiliary Oil Pump; Bearing and Seal Oil pump; and Emergency Bearing and Seal Oil Pump.	442
11.	Additional air-operated relay dump valve.	320
12.	Low Bearing Oil Pressure Trip and simultaneous alarm.	147
13.	Three (3) signal switches with 1NO, 1NC contact for control valve position.	442
14.	Turning Gear Panel, with SB switches and lights for turning gear motor and bearing oil pump, mounted on turbine.	858
15.	One set motor operated drain valves.	6400
16.	Two (2) Thrust Face wear, 1 - active, 1 - inactive.	1664

Itemized Prices Added
2/4/74 - H. J. O'B.

GENERAL ELECTRIC COMPANY

Specification No. LTSD-9825B
Proposition No. 247-E-5002

SPECIAL ACCESSORIES (Cont'd.)

		Net Price Per Unit
17.	Piping between spray chamber and collecting tank.	$ 768
18.	Hangers for oil, gas and hydraulic fluid piping.	2688
19.	One (1) set of Valves for double Valving of all drains and pressure sensing connections.	1280
20.	Temporary steam blow-down cover plates for main stop valves and stop-intercept valves.	1280
21.	Seven (7) Thermocuples for oil discharge connections, oil into coolers and oil out of coolers.	538
22.	Four (4) Thrust bearing metal thermocouples (active and inactive).	870
23.	Four (4) control start thermocouples.	1229
24.	One (1) additional electric-type speed indicator.	320
25.	One (1) TSI system including recorders for shaft vibration, speed and valve position, and eccentricity.	21,248
26.	One (1) Thermometer for Vacuum Pump discharge provided loose for Purchaser mounting.	205
27.	One (1) additional exhaust hood thermometer.	205
28.	T-316 Stainless Steel Thermowells for all thermocouples and thermometers.	1664
29.	One (1) terminal box for Seal Oil Control Unit including mounting.	416
30.	One (1) additional Hydrogen (low) Pressure pneumatic receiver gauge.	320
31.	Low Hydrogen Pressure pneumatic transmitter and receiver gauge (gauge mounted by Purchaser).	589
32.	Special sub-bases for Gland Seal Blower and Bearing Drain Enlargement including spill lip, drain boss and plug.	1664

Itemized Prices Added
2/4/74 - H. J. O'B.

GENERAL ELECTRIC COMPANY

Specification No. LTSD-9825B
Proposition No. 247-E-5002

SPECIAL ACCESSORIES (Cont'd.)

		Net Price Per Unit
33.	Special Covers and binders for instruction books as specified.	$ 1664
34.	Bowser oil conditioner with continuous by-pass including motor-driven pump and over flow sight glass and piping and drip pan.	6400
35.	One (1) Additional blower for gland seal system.	1664
36.	Manual vacuum breaker valve.	960
37.	One (1) initial change of oil for Lubrication system.	4672
38.	Supply of one removable plate for space heater installation in generator. On hydrogen generators, space heaters must be removed and plate resealed prior to hydrogen admission due to the danger of explosion.	1248
39.	Two (2) coats of enamel finish paint on the excitation system.	2160
40.	Six (6) additional coil RTD's.	461
41.	Four (4) additional CT's and Calibration of 3 CT's.	3208
42.	CT terminal box supplied loose for Purchaser mounting.	94
43.	Neutral grounding transformer including continuous rated resistor and transformer, and a voltage relay.	9872

 Date: 10/5/73 - JDM
Itemized Prices Added
2/4/74 - H. J. O'B.

GENERAL ELECTRIC

GENERAL ELECTRIC COMPANY, 159 MADISON AVE., NEW YORK, N. Y. 10016, U.S.A.

INTERNATIONAL SALES DIVISION

May 6, 1974

HOB 7884

RECEIVED
MAY 13 1974
BVI/LIS

Perusahaan Umum Listrik Negara
Jalan Sunan Ngampel 1
Kebajoran Baru
Jakarta, Indonesia

Attention: Ir. Bagoes Moedijantoro
Director of Construction

Re: Semarang Steam Power Plant
Units 1 and 2
Specification 6104-M-10A
GE Proposal No. 247-E-5002

During our contract discussion meetings held in the offices of Black and Veatch in Kansas City on 5/1/74 and 5/2/74 we reviewed with the PLN and Black and Veatch representatives the current status of turbine generator deliveries from our factory. As we advised, based upon material supply conditions in the United States, our current factory production schedule is such that the earliest we can offer to deliver these units is 21 and 22 months after establishment of an irrevocable letter of credit.

In view of PLN's stated desire to maintain the commercial operation date of the Semarang Plant as close as possible to the schedule indicated in the bid documents, we agreed, based upon certain conditions which were discussed, and subject to GE management approval, to schedule units one and two for delivery during February 1976 and March 1976.

This proposed schedule and the conditions relating thereto have been reviewed and approved by GE management, and we are therefore pleased to advise you that GE will agree to place the two 50,000 KW steam turbine generators in our factory production schedule to provide for delivery* during February 1976 and March 1976 for units one and two respectively predicated upon the following:

1. The Contract Agreement shall be signed by GE and PLN by 5/24/74.

2. Within Seventy-Five (75) days of the date of contract, PLN shall establish in favor of GE an acceptable irrevocable letter of credit through a U.S.A. bank under an AID Direct Commitment for the total price of the equipment plus the estimated cost of ocean freight and insurance, which is to be valid

* Port of export (added for clarification-BVI 8 May 74)

Phone 212 750-2000 | Cable INGECO NEW YORK

for sixty (60) months to permit all payments as due. to the extent of funds available, in accordance with the schedule of payments per Article GC.32 of the General Conditions included in Specification 6104-M-10A.

The letter of credit shall also provide for payment of any termination charges which may become due to GE under the Terms of the Contract, and shall be increased or extended to provide for payment as may be due under the terms of the contract.

3. Provided the letter of credit is established within the above specified 75 days, GE's liability with respect to liquidated damages for delays in delivery shall be based upon delays beyond 21 and 22 months from the date of the letter of credit.

4. If the letter of credit is not established within 75 days from the date of contract, GE will have the right to suspend performance, the delivery dates and GE's obligations relating thereto may be extended based upon the delivery schedule available when the letter of credit is finally established and the contract price may be subject to adjustment to take into account any additional costs which GE may have incurred as a result of the delay plus any changes in equipment prices which may be in effect predicated upon the new delivery schedule. Any changes in contract price and delivery and obligations relating thereto will, of course, be subject to mutual agreement before work is resumed.

We sincerely trust that this agreement to proceed with work in advance of the establishment of the letter, in order to effect earlier delivery, will meet with your satisfaction. If you have any questions in connection therewith, please let us know.

Very truly yours,

H. J. O'Brien

HOB/mm

H. J. O'Brien
Headquarters Sales Support Manager
Power Plant Project
Sales Support

BOND 180594524-C

BID BOND

(See Instructions on reverse)

26-103

DATE BOND EXECUTED (Must not be later than bid opening date): September 27, 1973

PRINCIPAL (Legal name and business address) (Bidder):
General Electric Company
International Sales Division
159 Madison Avenue
New York, New York 10016

TYPE OF ORGANIZATION (Check one): ☐ INDIVIDUAL ☐ PARTNERSHIP ☐ JOINT VENTURE ☒ CORPORATION

STATE OF INCORPORATION: New York

SURETY(IES) (Name and business address):
Federal Insurance Company
100 William Street
New York, New York 10038

PENAL SUM OF BOND					BID IDENTIFICATION	
PERCENT OF BID PRICE	AMOUNT NOT TO EXCEED				BID DATE	INVITATION NO. Specification
	MILLION(S)	THOUSAND(S)	HUNDRED(S)	CENTS	Oct. 11, 1973	6104-M-10A (247-E-5002)
10	---	680	000	00	FOR (Construction, Supplies or Services)	(2) 50 MW steam turbine generators

KNOW ALL MEN BY THESE PRESENTS, That we, the Principal and Surety(ies) hereto, are firmly bound to Perusahaan Umum Listrik Negara (hereinafter called PLN) in the above penal sum for the payment of which we bind ourselves, our heirs, executors, administrators, and successors, jointly and severally: *Provided*, That, where the Sureties are corporations acting as co-sureties, we, the Sureties, bind ourselves in such sum "jointly and severally" as well as "severally" only for the purpose of allowing a joint action or actions against any or all of us, and for all other purposes each Surety binds itself, jointly and severally with the Principal, for the payment of such sum only as is set forth opposite the name of such Surety, but if no limit of liability is indicated, the limit of liability shall be the full amount of the penal sum.

THE CONDITION OF THIS OBLIGATION IS SUCH, that whereas the Principal has submitted the bid identified above.

NOW, THEREFORE, if the Principal, upon acceptance by PLN of his bid identified above, within the period specified therein for acceptance (sixty (60) days if no period is specified), shall execute such further contractual documents, if any, and give such bond(s) as may be required by the terms of the bid as accepted within the time specified (ten (10) days if no period is specified) after receipt of the forms by him, or in the event of failure so to execute such further contractual documents and give such bonds, if the Principal shall pay PLN for any cost of procuring the work which exceeds the amount of his bid, then the above obligation shall be void and of no effect.

Each Surety executing this instrument hereby agrees that its obligation shall not be impaired by any extension(s) of the time for acceptance of the bid that the Principal may grant to PLN notice of which extension(s) to the Surety(ies) being hereby waived; provided that such waiver of notice shall apply only with respect to extensions aggregating not more than sixty (60) calendar days in addition to the period originally allowed for acceptance of the bid.

IN WITNESS WHEREOF, the Principal and Surety(ies) have executed this bid bond and have affixed their seals on the date set forth above.

PRINCIPAL

Signature(s)	1. Benjamin C. Thorn, Jr. (Seal)	2. (Seal)	Corporate Seal
Name(s) & Title(s) (Typed)	1. Benjamin C. Thorn, Jr. Manager, Power Generation Sales	2.	

INDIVIDUAL SURETIES

Signature(s)	1. (Seal)	2. (Seal)
Name(s) (Typed)	1.	2.

CORPORATE SURETY(IES)

SURETY A					
Name & Address	Federal Insurance Company 100 William Street, N.Y., N.Y.		STATE OF INC. N.J.	LIABILITY LIMIT	Corporate Seal
Signature(s)	1.		2.		
Name(s) & Title(s) (Typed)	1. Richard G. Hight Assistant Secretary		2.		

E 1

CORPORATE SURETY(IES) (Continued)					
SURETY	Name & Address		STATE OF INC.	LIABILITY LIMIT	Corporate Seal
	Signature(s)	1	2		
	Name(s) & Title(s) (Typed)	1	2		
SURETY C	Name & Address		STATE OF INC	LIABILITY LIMIT	Corporate Seal
	Signature(s)	1	2.		
	Name(s) & Title(s) (Typed)	1	2		
SURETY D	Name & Address		STATE OF INC.	LIABILITY LIMIT	Corporate Seal
	Signature(s)	1	2.		
	Name(s) & Title(s) (Typed)	1	2		
SURETY E	Name & Address		STATE OF INC.	LIABILITY LIMIT	Corporate Seal
	Signature(s)	1	2.		
	Name(s) & Title(s) (Typed)	1	2		
F	Name & Address		STATE OF INC	LIABILITY LIMIT	Corporate Seal
	Signature(s)	1	2.		
	Name(s) & Title(s) (Typed)	1	2.		
SURETY G	Name & Address		STATE OF INC.	LIABILITY LIMIT	Corporate Seal
	Signature(s)	1	2.		
	Name(s) & Title(s) (Typed)	1	2.		

INSTRUCTIONS

1. This form is authorized for use whenever a bid security is required in connection with construction work or the furnishing of supplies or services. There shall be no deviation from this form without approval by PLN.

2. The full legal name and business address of the Principal shall be inserted in the space designated "Principal" on the face of this form. The bond shall be signed by an authorized person. Where such person is signing in a representative capacity (e.g., an attorney-in-fact), but is not a member of the firm, partnership, or joint venture, or an officer of the corporation involved, evidence of his authority must be furnished.

3. The penal sum of the bond may be expressed as a percentage of the bid price if desired. In such cases, a maximum dollar limitation may be stipulated (e.g., 20% of the bid price but the amount not to exceed dollars).

4. (a) Where more than a single corporation surety is involved, their names and addresses (city and State) shall be inserted in the spaces (Surety A, Surety B, etc.) headed "CORPORATE SURETY (IES)", and in the space designated "SURETY (IES)" on the face of this form only the letter identification of the Sureties shall be inserted.

(b) Where individual sureties execute the bond, they shall be two or more responsible persons. A completed Affidavit of Individual Surety, for each individual surety, shall accompany the bond. Such sureties may be required to furnish additional substantiating information concerning their assets and financial rotype.

5. Corporations executing the bond shall affix their corporate seals. Individuals shall execute the bond opposite the word "Seal".

6. The name of each person signing this bid bond should be typed in the space provided.

B1

POWER OF ATTORNEY

VALID UNTIL DECEMBER 31, 1974

KNOW ALL MEN BY THESE PRESENTS that INTERNATIONAL SALES DIVISION of GENERAL ELECTRIC COMPANY (said Division herein called "INTSD"), a corporation duly organized and existing under and by virtue of the laws of the State of New York, United States of America, does hereby constitute and appoint H.J. O'BRIEN as its true and lawful Attorney-in-Fact, hereby giving and granting unto him full power and authority in the name and on behalf of INTSD to do the following:

1. To enter into any discussion, negotiation or transaction and accept and sign a letter of intent and negotiate and sign a contract with PERUSAHAAN UMUM LISTRIK NEGARA, Djakarta, Indonesia in connection with the sale and supply of steam turbine generators for the Semarang Steam Power Plant Units 1 and 2 pursuant to GE INTSD Proposal 247-E-5002.

2. AND GENERALLY, to act as attorney or agent with full power and authority to do and perform all and every act and thing whatsoever requisite and necessary to be done or which said attorney, in his judgment, deems advisable to be done in relation to the power granted above.

IN WITNESS WHEREOF, INTERNATIONAL SALES DIVISION of GENERAL ELECTRIC COMPANY has on this 19th day of March, 1974, caused this instrument to be signed by the proper representatives thereunto duly authorized and the corporate seal of the General Electric Company to be hereunto affixed.

INTERNATIONAL SALES DIVISION
GENERAL ELECTRIC COMPANY

By John J. Moore
Manager, Power Plant Projects
Sales Support

ATTEST:

William J. Lynch
Attesting Secretary
GENERAL ELECTRIC COMPANY

Seen at the Consulate General of the Republic of Indonesia
at New York, N. Y., on MAR 25 1974

[illegible] SOEWADI

State of New York
County of New York, } ss.:

No. 46367

Form 1

I, NORMAN GOODMAN, County Clerk and Clerk of the Supreme Court of the State of New York, in and for the County of New York, a Court of Record, having by law a seal,

DO HEREBY CERTIFY pursuant to the Executive Law of the State of New York, that

J. Richard Hunneman, Jr.

whose name is subscribed to the annexed affidavit, deposition, certificate of acknowledgment or proof, was at the time of taking the same a NOTARY PUBLIC in and for the State of New York duly commissioned, sworn and qualified to act as such; that pursuant to law, a commission or a certificate of his official character, with his autograph signature has been filed in my office; that at the time of taking such proof, acknowledgment or oath, he was duly authorized to take the same; that I am well acquainted with the handwriting of such NOTARY PUBLIC or have compared the signature on the annexed instrument with his autograph signature deposited in my office, and I believe that such signature is genuine.

IN WITNESS WHEREOF, I have hereunto set my hand and affixed my official seal this

FEE PAID $3.00 [illegible]

Norman Goodman
County Clerk and Clerk of the Supreme Court, New York County

B2

POWER OF ATTORNEY

VALID UNTIL MAY 31, 1974

KNOW ALL MEN BY THESE PRESENTS that INTERNATIONAL SALES DIVISION of GENERAL ELECTRIC COMPANY (said Division herein called "ISD"), a corporation duly organized and existing under and by virtue of the laws of the State of New York, United States of America, does hereby constitute and appoint H.J. O'BRIEN as its true and lawful Attorney-in-Fact, hereby giving and granting unto him full power and authority in the name and on behalf of ISD to do the following:

1. To enter into any discussion, negotiation or transaction and sign and submit a bid to Perusahaan Umum Listrik Negara, Djakarta, Indonesia in response to the invitation to bid issued in July 1973 for steam turbine generators for the Semarang Steam Power Plant Units 1 and 2 (G.E. IntSD Proposal 247-E-5002).

2. AND GENERALLY, to act as attorney or agent with full power and authority to do and perform all and every act and thing whatsoever requisite and necessary to be done or which said attorney, in his judgment, deems advisable to be done in relation to the power granted above.

IN WITNESS WHEREOF, INTERNATIONAL SALES DIVISION of GENERAL ELECTRIC COMPANY has on this 2nd day of October, 1973, caused this instrument to be signed by the proper representatives thereunto duly authorized and the corporate seal of the General Electric Company to be hereunto affixed.

INTERNATIONAL SALES DIVISION
GENERAL ELECTRIC COMPANY

By _____
Manager, Power Generation Sales

ATTEST:

_____
Attesting Secretary
GENERAL ELECTRIC COMPANY

UNITED STATES OF AMERICA)
STATE OF NEW YORK :SS
COUNTY OF NEW YORK)

On this 2nd day of October, 1973, before me personally came B.C. Thorn, who being by me duly sworn, did depose and say that he resides in Wilton, Connecticut; that he is Manager, Power Generation Sales of International Sales Division, General Electric Company said General Electric Company being the corporation described in the foregoing instrument; that the seal of said corporation; that the seal affixed regoing instrument is such corporate seal; that it fixed by authority of the Board of Directors; and igned his name thereto by like authority.

Seen at the Consulate General of the Republic of Indonesia New York, N.Y. on OCT 3 1973

ry Public

J. RICHARD HUNNEMAN, JR.
Notary Public, State of New York
No. 60-4504200
Qualified in Westchester County
Certificate filed in New York County
Commission Expires March 30, 1974.

L.D. IMAM SOEWADJI
CONSUL

CITY, COUNTY & STATE OF NEW YORK, ss:

On this 27th day of September 19 73 before me personally came Richard G. Hight, who, being duly sworn, did depose and say that he resides in Dunellen, N.J.; that he is Assistant Secretary of the FEDERAL INSURANCE COMPANY, the corporation described in and which executed the annexed instrument; that he knows the corporate seal of said corporation; that the seal affixed to said instrument is such corporate seal; that it was so affixed by order and authority of the Board of Directors of said corporation, and that he signed his name thereto by like order and authority.

Sworn to and Acknowledged before me on the date above written

MARY K. BENDICK
NOTARY PUBLIC, State of New York
No. 24-0237960
Qualified in Kings County
Certificate filed in New York County
Commission Expires March 30, 1975

Mary K. Bendick
(Notary's Signature, Description and Seal)

Certified Copy of Resolution Authorizing Execution of Bonds

At a special meeting of the Board of Directors of the FEDERAL INSURANCE COMPANY, duly held at the office of the Company in New York, N.Y., on the Eighth day of March, 1973, a quorum being present, on motion it was unanimously

"RESOLVED, that anyone of the following: Hendon Chubb II, Alexander Kerner, Senior Vice Presidents; John C. Harden, Fred V. Moran, Vice Presidents, Walter LaForge, George McClellan, Daniel F. Randolph, Assistant Vice Presidents; Liliane S. Dammond, Richard G. Hight, John MacGregor, Richard D. O'Connor, Margaret E. Wager, Assistant Secretaries, Carlton H. Kiser, Albert J. Krey, Joseph P. Milana, S. H. Steffey, Jr., Attorneys-in-fact, be and hereby are authorized to individually execute under their respective designations, in this Company's name and to affix its corporate seal to, and deliver for and on its behalf, as surety thereon or otherwise, bonds or obligations given or executed in the course of this Company's business, and any instruments amending or altering the same, and consents to the modification or alteration or assignment of any instruments referred to in said bonds or obligations, and the execution of any and all instruments in this Company's name and on its behalf as surety thereon or otherwise by such persons in the authorized manner and under their respective designation, under the seal of this Company in pursuance of the authority hereby conferred, shall be valid and binding upon this Company."

Financial Statement of Federal Insurance Company as of December 31, 1972

IN THOUSANDS OF DOLLARS

STATUTORY BASIS

ASSETS

United States Treasury Bonds	$ 10,231
United States Government Secured New Housing Bonds	47,014
State and Municipal Bonds	134,743
Other Bonds	55,667
Preferred Stocks	3,728
Common Stocks	206,826
TOTAL INVESTMENTS	458,209
Capital Stock of Affiliates	
Great Northern Insurance Co.	12,507
Pacific Indemnity Company	67,701
Colonial Life Insurance Co.	17,201
The Chubb Corporation	5,592
Other	1,234
Cash	2,985
Net Premiums Receivable	77,146
Reinsurance Recoverable on Paid Losses	9,932
Other Assets	18,137
TOTAL ADMITTED ASSETS	$670,644

LIABILITIES AND SURPLUS TO POLICYHOLDERS

Unearned Premiums	$157,159
Outstanding Losses and Claims	185,177
Ceded Reinsurance Balances Payable	35,061
Dividend Payable to Shareholder	3,050
Funds Held under Reinsurance Treaties	13,244
Non-Admitted Reinsurance	6,891
Other Liabilities	19,084
TOTAL LIABILITIES	419,666
Capital Stock	13,987
Paid-in Surplus	9,218
Earned Surplus	110,853
Unrealized Appreciation of Investments	116,920
SURPLUS TO POLICYHOLDERS	250,978
TOTAL	$670,644

Investments are valued in accordance with requirements of the National Association of Insurance Commissioners.

Investments valued at $30,553,000 are deposited with government authorities as required by law.

Certification

CITY, COUNTY & STATE OF NEW YORK, ss:

I, D. Villegas, Assistant Secretary of the FEDERAL INSURANCE COMPANY, do hereby certify that I have compared the foregoing resolution with the original thereof as recorded in the Minute Book of said Company, and that the same is a correct and true copy of the whole of said original resolution and that said resolution has not been modified or rescinded; that the Company is duly and legally incorporated under the laws of the State of New Jersey and has complied with the provisions of the Act of Congress August 13, 1894, as amended, allowing certain corporations to be accepted as Surety on bonds, that the Company is duly licensed to transact fidelity and surety business in each of the States of the United States of America, District of Columbia, Puerto Rico, and in each of the Provinces of Canada with the exception of Prince Edward Island.

Given under my hand and seal of said Company at the City of New York, this 27th day of September, 19 73

D. Villegas

PERUSAHAAN UMUM LISTRIK NEGARA

P U S A T

Jalan Trunojoyo Blok M I 135

JAKARTA

Map. No. :

Jakarta, March 8, 1974

Kepada :

Mr. H.J. O'Brien

Headquarters Sales Manager
Power Plant Project Sales
Support.
General Electric Co.
159 Madison Ave. New York,
N. Y. 10016

U. S. A.-

Dear Sir,

We acknowledge receipt of your January 23, 1974, telex and January 23, 1974 cablination letter which advice that while General Electric has announced a Steam Turbine Generator price increase effective January 21, 1974, General Electric will honor its outstanding commitments, and its October 5, 1973, proposal to PLN, which is valid for 150 days from the proposal opening date, will be honored in accordance with its terms.

We appreciate General Electric's position with regard to its Turbine Generator proposal to PLN, and we wish to advise you that it is the intent of PLN to purchase the two 50 MW Steam Turbine Generators to be installed at the Semarang site from the General Electric Co., using the General Electric proposal No. 147-S-5002, dated October 5, 1973, which was opened in Jakarta, Indonesia, on October 11, 1973, as the basis for contract discussions, negotiations and subsequent agreement.

PLN is grateful, that the General Electric Co., on the basis of this letter of intent, agrees to maintain the validity of the equipment price quoted in its proposal No. 147-S-5002, on the basis that the contract will be finalized between PLN and General Electric and approved by AID within 60 days after the present expiration date of the General Electric proposal.

Upon consummation of a contract between PLN and the General Electric Co, this letter of intent will become part of said contract. If within the above-referenced 60 days period and any additional period which may be mutually agreed upon, no contract was consummated, or AID has not approved the contract either party may cancel this letter of intent with neither party being under any financial or other obligation to the other party.

BEST AVAILABLE COPY

PERUSAHAAN UMUM LISTRIK NEGARA
PUSAT

File No.
Surat No. P.1112/DIR/74
Tanggal March 8, 1974.

Please acknowledge receipt of this letter and indicate your agreement by returning second copy of this Letter of Intent after due signing for proper acceptance at your earliest convenience.

Sincerely yours,

PERUSAHAAN UMUM LISTRIK NEGARA
The Board of Directors,

Ir. RAGOES POERIJANTORO
Director for Construction

We hereby agree to the foregoing:

Date : March 20, 1974
General Electric Company
International Sales Division

H. J. O'Brien
Headquarters Sales Manager
Power Plant Project Sales Support

BEST AVAILABLE COPY

BASIS OF CONTRACT AWARD

The Basis of Contract Award shall be in accordance with the Specifications and Documents for Turbine Generators 6104-M-10A Issued 25 July 1973, as revised for contract issue; Addendum 1 dated 2 August 1973; Addendum 2 dated 15 August 1973; Addendum 3 dated 31 August 1973; and Addendum 4 dated 17 September 1973; General Electric Company International Sales Division Proposal 247-E-5002, dated 5 October 1973; General Electric International Sales Division supplemental letters HOB-7865 dated 5 February 1974 and HOB 7884 dated 6 May 1974; and PLN Letter of Intent dated 8 March 1974.

The Letter of Credit shall be established within 75 days after the date of contract.

The contract price shall be established as follows:

Deducts for deletion of the following special accessories (Refer to GE Proposal Specification LTSD-9825B dated 5 October 1973, Pages 32, 33 and 34; and GE Letter HOB-7865).

		Net Price Per Unit	Total
GE Item 6	Test Connections	$4,480	$8,960
GE Item 8	Manual Emergency Governor Exerciser	3,840	7,680
GE Item 23	Four Control Start Thermocouples	1,229	2,458
GE Item 27	One additional exhaust hood thermometer	205	410
GE Item 30	One additional H_2 L.P. receiver gauge	320	640
GE Item 32	Special Sub-bases for G.S. Blower & Bearing Drain Enlargement	1,664	3,328
GE Item 38	Removable plate for space heater installation in generator	1,248	2,496
GE Item 39	Two coats enamel finish on exciter housing	2,160	4,320

(PLN 6104)
(TURBINE GENERATORS M-10A)
050874-1

Deducts for purchasing the following alternate features (Refer to GE Letter HOB-7865).

	Net Price Per Unit	Total
For static exciter in lieu of rotating excitor	$46,011	$92,022
For furnishing a 62,500 kVA generator at 0.85 PF in lieu of 0.80 PF	13,333	26,666
For terminal boxes without 25 per cent extra space	2,912	5,824
Total deduct for deletion of special accessories and purchase of alternate features as stated above		$154,804

Price Summary

C.1 Equipment and Materials (Refer to GE Proposal 247-E-5002)		$5,279,000	
For deleting Technical Advisory Services (Refer to GE Letter HOB-7865)	deduct	581,000	
For deletion of certain special accessories and purchase of certain alternate features (See tabulation above)	deduct	154,804	
For purchase of one set of spare parts		100,000	
Subtotal		$4,643,196	
Ocean freight, handling, and insurance		240,000	
Contractor Administrative Expenses (Rupiahs)		-	Rp 2,028,553
TOTAL CONTRACT PRICE		$4,883,196	Rp 2,028,553

(PLN 6104)
(TURBINE GENERATORS M-10A)
050874-1

CONTRACT AGREEMENT

THIS CONTRACT AGREEMENT, made and entered into this 28 of JUN 1974, by and between the PERUSAHAAN UMUM LISTRIK NEGARA, Party of the First Part and hereinafter called "Owner", and GENERAL ELECTRIC COMPANY, a New York corporation acting through its INTERNATIONAL SALES DIVISION, said Division with its principal office in New York, New York, Party of the Second Part and hereinafter called "Contractor".

WITNESSETH:

THAT WHEREAS, the Owner has caused to be prepared specifications, plans and other contract documents for the work as herein specified; and

WHEREAS, the said Contractor has submitted to the Owner a tender in accordance with the terms of this Contract Agreement; and

WHEREAS, the Owner has determined and declared the aforesaid Contractor has submitted the lowest evaluated proposal for the said work, and has therefore duly awarded to the said Contractor a contract for work as defined in this Contract Agreement and the Basis of Contract Award which is attached hereto and made a part hereof, for the sum or sums named herein;

NOW, THEREFORE, in consideration of the compensation to be paid to the Contractor and of the mutual agreements herein contained, the parties to these presents have agreed and hereby agree, the Owner for itself and its successors, and the Contractor for itself, himself, or themselves, or its, his or their successors and assigns, or its, his or their executors and administrators, as follows:

ARTICLE I. That the Contractor shall furnish fob factory freight and insurance prepaid to alongside vessel USA east coast port of export; furnish ocean freight (including port charges for handling, loading, and unloading) insurance and surcharges; and deliver to the port of Semarang, Indonesia, two turbine generating units and auxiliary equipment as specified in accordance with the provisions of the contract documents, as defined in Article GC.1 of the General Conditions, and the Basis of Contract Award which is included therein.

ARTICLE II. That the Owner shall pay to the Contractor for furnishing equipment and materials designated in the foregoing Article I as embraced in this Contract Agreement, and the Contractor will accept as full compensation therefore, the sum (subject to adjustments as provided by the contract) of FOUR MILLION SIX HUNDRED FORTY-THREE THOUSAND ONE HUNDRED NINETY-SIX DOLLARS ($4,643,196.00); payment to be made in United States currency in the manner provided in the contract documents attached hereto; that the Owner shall pay to the Contractor for administrative expenses the sum of TWO MILLION TWENTY-EIGHT THOUSAND FIVE HUNDRED AND FIFTY-THREE RUPIAHS (Rp 2,028,553 IND). *Administrative expenses shall be paid by the Owner to the Contractor from the budget of Proyek Survey dan Perencanaan Umum Kelistrikan (S.P.U.K.) immediately upon signing of the Contract.*

(PLN 6104)
(TURBINE GENERATORS M-10A)
050874-1

ARTICLE III. That the Owner shall pay to the Contractor for furnishing the actual cost of ocean freight (including port charges for handling, loading, and unloading), insurance and surcharge on equipment and materials designated in the foregoing Article I from the U.S.A. port of shipment to the Port of Semarang, Java, Indonesia, and the Contractor will be paid compensation therefore the estimated sum of TWO HUNDRED FORTY THOUSAND DOLLARS ($240,000.00); subject to final adjustment to actual cost at the conclusion of the shipment of all required materials and equipment; payment to be made in United States currency in the manner provided in the contract documents attached hereto.

ARTICLE IV. That time of delivery is of the essence of this Contract Agreement, and that the Contractor shall proceed with the specified work and shall conform to the following schedule:

The Contractor shall furnish fob factory freight and insurance prepaid to alongside vessel USA east coast port of export Turbine Generator Unit 1 during February 1976 and Turbine Generator Unit 2 during March 1976.

ARTICLE V. That in the event the Contractor shall fail to deliver the specified equipment and materials for Turbine Generator Unit 1 within 21 months after the establishment of the Letter of Credit (22 months for Unit 2), the Contractor shall be liable to the Owner for the amount of ONE THOUSAND DOLLARS ($1,000.00), as liquidated damages and not as a penalty, for each calendar day of delay in delivery of the unit which causes a delay in achieving commercial operation of said unit, or causes the Construction Contractor to mobilize in addition to his normal construction to achieve commercial operation of said unit, such additional mobilization to be considered as and converted to days of delay, it being understood that such liability for liquidated damages shall not exceed the aforesaid ONE THOUSAND DOLLARS ($1,000.00) per day of delay in delivery of the unit, in accordance with the provisions of Article GC.34 (as revised for Contract) of the General Conditions; that said liquidated damages shall apply individually to Units 1 and 2; provided, however, that the total amount of said liquidated damages shall not exceed ten per cent of that portion of the contract price for equipment and materials stated in Article II of this Contract Agreement which comprises the contract price for all of the equipment and materials for that Unit.

ARTICLE VI. That in the event the equipment furnished by the Contractor shall fail to fulfill certain performance guarantees as specified in Article 2A.5 of the specifications, the Contractor shall be liable to the Owner as liquidated damages and not as a penalty, for the amounts calculated in accordance with the provisions of aforesaid Article 2A.5; provided, however,

that the sum of liquidated damages assessed under the provisions of the foregoing Article V and under the provisions of this Article VI shall not exceed ten per cent of the price for equipment and materials stated in Article II of this Contract Agreement.

IN WITNESS WHEREOF, the parties hereto have executed this Contract Agreement as of the day and year first above written.

OWNER

PERUSAHAAN UMUM LISTRIK NEGARA

(Seal)

Attest G. F. Corbell By: [illegible]

Director for Construction.

CONTRACTOR

GENERAL ELECTRIC COMPANY
INTERNATIONAL SALES DIVISION

(Seal)

Attest W. T. [illegible] By: H. J. O'Brien

H. J. O'Brien
Attorney-in-Fact

(PLN 6104)
(TURBINE GENERATORS M-10A)
050874-1

BOND NO. 80650523

PERFORMANCE BOND

(See Instructions on reverse)

DATE BOND EXECUTED: June 17, 1974

PRINCIPAL (Legal name and business address) (Contractor)

General Electric Company
International Sales Division
159 Madison Avenue
New York, N. Y. 10016

TYPE OF ORGANIZATION ("X" one)

☐ INDIVIDUAL ☐ PARTNERSHIP
☐ JOINT VENTURE ☒ CORPORATION

STATE OF INCORPORATION: New York

SURETY(IES) (Name(s) and business address(es))

Federal Insurance Company
100 William Street
New York, New York 10038

PENAL SUM OF BOND

MILLION(S)	THOUSAND(S)	HUNDRED(S)	CENT(S)
1	466	425	00

CONTRACT DATE:

CONTRACT NO: 6104-M-10A (GE-818830)

KNOW ALL MEN BY THESE PRESENTS, That we, the Principal and Surety(ies) hereto, as of the Contract Date above stated, will be firmly bound to Perusahaan Umum Listrik Negara (hereinafter called PLN) in the above penal sum for the payment of which we bind ourselves, our heirs, executors, administrators, and successors, jointly and severally: *Provided*, That, where the Sureties are corporations acting as co-sureties, we, the Sureties, bind ourselves in such sum "jointly and severally" as well as "severally" only for the purpose of allowing a joint action or actions against any or all of us, and for all other purposes each Surety binds itself, jointly and severally with the Principal, for the payment of such sum only as is set forth opposite the name of such Surety, but if no limit of liability is indicated, the limit of liability shall be the full amount of the penal sum.

THE CONDITION OF THIS OBLIGATION IS SUCH, that whereas the Principal entered into the contract identified above;

NOW, THEREFORE, if the Principal shall:

(a) Perform and fulfill all the undertakings, covenants, terms, conditions, and agreements of said contract during the original term of said contract and any extensions thereof that may be granted by PLN, with or without notice to the Surety(ies), and during the life of any guaranty required under the contract, and shall also perform and fulfill all the undertakings, covenants, terms, conditions, and agreements of any and all duly authorized modifications of said contract that may hereafter be made, notice of which modifications to the Surety(ies) being hereby waived; and

(b) Pay to the Government of Indonesia the full amount of the taxes imposed by the Government of Indonesia which are collected, deducted, or withheld from wages paid by the Principal in carrying out the construction contract with respect to which this bond is furnished; then the above obligation shall be void and of no effect.

IN WITNESS WHEREOF, the Principal and Surety(ies) have executed this performance bond and have affixed their seals on the date set forth above.

PRINCIPAL

Signature(s)	1. John L. Gorenc (Seal)	2. (Seal)	Corporate Seal
Name(s) & Title(s) (Typed)	1. John L. Gorenc, Manager Power Plant Project Sales Support	2.	

INDIVIDUAL SURETY(IES)

Signature(s)	1. (Seal)	2. (Seal)
Name(s) (Typed)	1.	2.

CORPORATE SURETY(IES)

SURETY A	Name & Address	Federal Insurance Company 100 William St., New York, NY	STATE OF INC. N.J.	LIABILITY LIMIT	Corporate Seal
	Signature(s)	1.	2.		
	Name(s) & Title(s) (Typed)	Richard G. Hight Assistant Secretary	2.		

25-IC

PB-1

CORPORATE SURETY(IES) (Continued)

SURETY B	Name & Address		STATE OF INC	LIABILITY LIMIT	Corporate Seal
	Signature(s)	1	2		
	Name(s) & Title(s) (Typed)	1	2		
SURETY C	Name & Address		STATE OF INC	LIABILITY LIMIT	Corporate Seal
	Signature(s)	1.	2.		
	Name(s) & Title(s) (Typed)	1	2.		
SURETY D	Name & Address		STATE OF INC.	LIABILITY LIMIT	Corporate Seal
	Signature(s)	1.	2		
	Name(s) & Title(s) (Typed)	1	2		
SURETY E	Name & Address		STATE OF INC.	LIABILITY LIMIT	Corporate Seal
	Signature(s)	1	2.		
	Name(s) & Title(s) (Typed)	1	2		
SURETY F	Name & Address		STATE OF INC.	LIABILITY LIMIT	Corporate Seal
	Signature(s)	1.	2.		
	Name(s) & Title(s) (Typed)	1	2		
SURETY G	Name & Address		STATE OF INC.	LIABILITY LIMIT	Corporate Seal
	Signature(s)	1.	2.		
	Name(s) & Title(s) (Typed)	1	2		

BOND PREMIUM	RATE PER THOUSAND	TOTAL
	$ 2.50	$ 3,666.06

INSTRUCTIONS

1. This form is authorized for use in connection with contracts for construction work or the furnishing of supplies or services. There shall be no deviation from this form without approval by PLN.

2. The full legal name and business address of the Principal shall be inserted in the space designated "Principal" on the face of this form. The bond shall be signed by an authorized person. Where such person is signing in a representative capacity (e.g., an attorney-in-fact), but is not a member of the firm, partnership, or joint venture, or an officer of the corporation involved, evidence of his authority must be furnished.

3. (a) Corporations executing the bond as sureties must be authorized to act as sureties. Where more than a single corporate surety is involved, their names and addresses (city and state) shall be inserted in the spaces (Surety A, Surety B, etc.) headed "CORPORATE SURETY (IES)", and in the space designated "SURETY (IES)" on the face of this form only the letter identification of the Sureties shall be inserted.

(b) Where individual sureties execute the bond, they shall be two or more responsible persons. A completed Affidavit of Individual Surety, for each individual surety, shall accompany the bond. Such sureties may be required to furnish additional substantiating information concerning their assets and financial capacility as PLN may require.

4. Corporations executing the bond shall affix their corporate seals. Individuals shall execute the bond opposite the word "Seal".

5. The name of each person signing this performance bond should be typed in the space provided.

(Individual Principal)

STATE OF _____ } ss.:
COUNTY OF _____

On this _____ day of _____ 19 , before me personally came _____, to me known and known by me to be the individual described in and who executed the foregoing instrument, and he duly acknowledged to me that he executed the same.

_____ Notary Public

My commission expires _____

(When Principal is a Firm)

STATE OF _____ } ss.:
COUNTY OF _____

On this _____ day of _____ 19 , before me personally came _____, to me known and known by me to be a member of the firm of _____, described in and which executed the foregoing instrument, and the said _____ duly acknowledged to me that he executed the said instrument in the name of said firm and for its purposes and on its behalf.

_____ Notary Public

My commission expires _____

(When Principal is a Corporation)

STATE OF New York } ss.:
COUNTY OF New York

On this 17th day of June 19 74 , before me personally came John L. Gorenc to me known, who being by me duly sworn, did depose and say; that he resides in Marlboro, N. J. that he is the Manager, Power Plant Project Sales Support of General Electric Company, International Sales Division, the corporation described in and which executed the above instrument; that he knows the seal of said corporation; that the seal affixed to said instrument is such corporate seal; that it was so affixed by order of the Board of Directors of said corporation, and that he signed his name thereto by like order.

Francis W. Kelly Notary Public.

My commission expires March 30, 1975

FRANCIS W. KELLY, Notary Public
State of New York No. 60-2077591
Qualified in Westchester County
Cert. Filed in New York County
Commission Expires March 30, 1975

Form 12251

L-2341 (5M)

PRINTED IN U.S.A.

Acknowledgment for Annexed Instrument

STATE OF New York
COUNTY OF New York } ss.:

On this 17th day of June 19 74, before me personally came Richard G. Light, who, being by me duly sworn, did depose and say that he is an Attorney-in-Fact of the FEDERAL INSURANCE COMPANY, and knows the corporate seal thereof; that the seal affixed to said annexed instrument is such corporate seal, and was thereto affixed by authority of the Power of Attorney of said Company, of which a Certified Copy is hereto attached, and that he signed said Instrument as an Attorney-in-Fact of said Company by like authority.

Secretary

Assistant

My Commission Expires

MURIEL FARRELL
NOTARY PUBLIC, State of New York
No. 43-1107215
Qualified in Richmond County
Certificate filed in New York County
Commission Expires March 30, 1975

Acknowledged and Sworn to before me on the date above written.

Muriel Farrell

(Notary Public)

Form 12085F (Rev. 4-63)

K-8370 (20M) PRINTED IN U.S.A.

FEDERAL INSURANCE COMPANY

ANNUAL STATEMENT—December 31, 1973

IN THOUSANDS OF DOLLARS

STATUTORY BASIS

ASSETS

United States Treasury Bonds	$ 100
United States Government Secured New Housing Bonds	59,271
State and Municipal Bonds	157,319
Other Bonds	51,462
Preferred Stocks	6,877
Common Stocks	189,962
TOTAL INVESTMENTS	464,991
Capital Stock of Affiliates:	
Great Northern Insurance Co.	10,972
Pacific Indemnity Company	63,131
Colonial Life Insurance Co.	19,940
Other	1,083
Cash	3,653
Net Premiums Receivable	79,102
Reinsurance Recoverable on Paid Losses	10,221
Other Assets	32,751
TOTAL ADMITTED ASSETS	$685,844

LIABILITIES AND SURPLUS TO POLICYHOLDERS

Unearned Premiums	$172,281
Outstanding Losses and Claims	211,074
Ceded Reinsurance Balances Payable	36,196
Dividend Payable to Shareholder	4,000
Funds Held under Reinsurance Treaties	14,978
Non-Admitted Reinsurance	7,283
Other Liabilities	26,709
TOTAL LIABILITIES	472,521
Capital Stock	13,987
Paid-in Surplus	9,218
Earned Surplus	117,103
Unrealized Appreciation of Investments	73,015
SURPLUS TO POLICYHOLDERS	213,323
TOTAL	$685,844

Investments are valued in accordance with requirements of the National Association of Insurance Commissioners. Investments valued at $34,985,000 are deposited with government authorities as required by law.

State, County & City of New York,—ss:

John MacGregor, Assistant Secretary of the Federal Insurance Company being duly sworn, deposes and says that the foregoing statement of the Assets and Liabilities of said Federal Insurance Company on December 31, 1973 is true and correct and is a true abstract of the Statement of Assets and Liabilities of said Company as filed with the Secretary of the Treasury of the United States for the 12 months ending December 31, 1973.

Subscribed and sworn to before me.

this 27th day of March, 1974.

Mary K. Bendick
Notary Public

John MacGregor
Assistant Secretary

MARY K. BENDICK
NOTARY PUBLIC, State of New York
No. 24-0237950
Qualified in Kings County
Certificate filed in New York County
Commission Expires March 30, 1975

Form 2080 (Ed. 3-74)

Certified Copy

POWER OF ATTORNEY

Know all Men by these Presents, That the FEDERAL INSURANCE COMPANY, 90 John Street, New York, New York, a New Jersey Corpoporation, has constituted and appointed, and does hereby constitute and appoint

Liliane S. Dammond, Richard G. Hight, Arthur A. Kuhne, Assistant Secretaries of this Company, and Lois M. Briggs, Muriel Farrell, Eleanor Hang, William J. Murray, Wendell T. Saline, Robert P. Scavetta, S.H. Steffey, Jr.

each its true and lawful Attorney-in-Fact to execute under such designation in its name and to affix its corporate seal to and deliver for and on its behalf as surety thereon or otherwise, bonds or obligations given or executed in the course of its business, and any instruments amending or altering the same, and consents to the modification or alteration of any instruments referred to in said bonds or obligations.

In Witness Whereof, the said FEDERAL INSURANCE COMPANY has, pursuant to its By-Laws, caused these presents to be signed by its Assistant Vice President and Assistant Secretary and its corporate seal to be hereto affixed this 8th day of March 19 74

FEDERAL INSURANCE COMPANY
By

George McClellan
Assistant Vice-President

John MacGregor
Assistant Secretary

STATE OF NEW YORK }
County of New York } ss.:

On this 8th day of March 19 74 before me personally came John MacGregor, to me known and by me known to be Assistant Secretary of the FEDERAL INSURANCE COMPANY, the Corporation described in and which executed the foregoing Power of Attorney and the said John MacGregor being by me duly sworn, did depose and say that he resides in the City of Short Hills, in the State of New Jersey; that he is Assistant Secretary of the FEDERAL INSURANCE COMPANY and knows the corporate seal thereof; that the seal affixed to the foregoing Power of Attorney is such corporate seal and was thereto affixed by authority of the By-Laws of said Company and that he signed said Power of Attorney as Assistant Secretary of said Company by like authority; that he is acquainted with George McClellan and knows him to be Assistant Vice-President of said Company, and that the signature of said George McClellan subscribed to said Power of Attorney is in the genuine handwriting of said George McClellan and was thereto subscribed by authority of said By-Laws and in deponent's presence.

Acknowledged and Sworn to before me
on the date above written

Notary Public

MARY K. BENDICK
Notary Public, State of New York
No. 24-0237960
Qualified in Kings County
Certificate filed in New York County
Commission Expires March 30, 1975

MARY K. BENDICK NOTARY PUBLIC STATE OF NEW YORK

CITY AND COUNTY OF NEW YORK: ss

I, the undersigned, Assistant Secretary of the FEDERAL INSURANCE COMPANY, do hereby certify that the following is a true excerpt from the By-Laws of the said Company as adopted by its Board of Directors on March 11, 1953 and amended May 27, 1971 and that this By-Law is in full force and effect.

"ARTICLE XVIII.

Section 2. All bonds, undertakings, contracts and other instruments other than as above for and on behalf of the Company which it is authorized by law or its charter to execute, may and shall be executed in the name and on behalf of the Company either by the Chairman or the Vice Chairman or the President or a Vice-President, jointly with the Secretary or an Assistant Secretary, under their respective designations, except that any one or more officers or attorneys-in-fact designated in any resolution of the Board of Directors or the Executive Committee, or in any power of attorney executed as provided for in Section 3 below, may execute any such bond, undertaking or other obligation as provided in such resolution or power of attorney.

Section 3. All powers of attorney for and on behalf of the Company may and shall be executed in the name and on behalf of the Company, either by the Chairman or the Vice-Chairman or the President or a Vice-President or an Assistant Vice-President, jointly with the Secretary or an Assistant Secretary, under their respective designations."

And I further certify that I have compared the foregoing copy of the POWER OF ATTORNEY with the original thereof and the same is a correct and true copy of the whole of said original Power of Attorney and that said Power of Attorney has not been revoked.

And I further certify that said FEDERAL INSURANCE COMPANY is duly licensed to transact fidelity and surety business in each of the States of the United States of America, District of Columbia, Puerto Rico, and each of the Provinces of Canada with the exception of Prince Edward Island; and is also duly licensed to become sole surety on bonds, undertakings, etc., permitted or required by law.

Given under my hand and seal of said Company at New York, N.Y., this 17th day of June, 19 74

Assistant Secretary

PERFORMANCE BOND

(See Instructions on reverse)

DATE BOND EXECUTED *(Must be same or later than date of contract)*

PRINCIPAL *(Legal name and business address)* (Contractor)

TYPE OF ORGANIZATION *("X" one)*

☐ INDIVIDUAL ☐ PARTNERSHIP

☐ JOINT VENTURE ☐ CORPORATION

STATE OF INCORPORATION

SURETY(IES) *(Name(s) and business address(es))*

PENAL SUM OF BOND

MILLION(S)	THOUSAND(S)	HUNDRED(S)	CENT(S)

CONTRACT DATE	CONTRACT NO.

KNOW ALL MEN BY THESE PRESENTS, That we, the Principal and Surety(ies) hereto, are firmly bound to Perusahaan Umum Listrik Negara (hereinafter called PLN) in the above penal sum for the payment of which we bind ourselves, our heirs, executors, administrators, and successors, jointly and severally: *Provided*, That, where the Sureties are corporations acting as co-sureties, we, the Sureties, bind ourselves in such sum "jointly and severally" as well as "severally" only for the purpose of allowing a joint action or actions against any or all of us, and for all other purposes each Surety binds itself, jointly and severally with the Principal, for the payment of such sum only as is set forth opposite the name of such Surety, but if no limit of liability is indicated, the limit of liability shall be the full amount of the penal sum.

THE CONDITION OF THIS OBLIGATION IS SUCH, that whereas the Principal entered into the contract identified above;

NOW, THEREFORE, if the Principal shall:

(a) Perform and fulfill all the undertakings, covenants, terms, conditions, and agreements of said contract during the original term of said contract and any extensions thereof that may be granted by PLN, with or without notice to the Surety(ies), and during the life of any guaranty required under the contract, and shall also perform and fulfill all the undertakings, covenants, terms, conditions, and agreements of any and all duly authorized modifications of said contract that may hereafter be made, notice of which modifications to the Surety(ies) being hereby waived; and

(b) Pay to the Government of Indonesia the full amount of the taxes imposed by the Government of Indonesia which are collected, deducted, or withheld from wages paid by the Principal in carrying out the construction contract with respect to which this bond is furnished; then the above obligation shall be void and of no effect.

IN WITNESS WHEREOF, the Principal and Surety(ies) have executed this performance bond and have affixed their seals on the date set forth above.

PRINCIPAL

Signature(s)	1 *(Seal)*	2. *(Seal)*	*Corporate Seal*
Name(s) & Title(s) *(Typed)*	1	2	

INDIVIDUAL SURETY(IES)

Signature(s)	1 *(Seal)*	2. *(Seal)*
Name(s) *(Typed)*	1	2.

CORPORATE SURETY(IES)

SURETY A	Name & Address		STATE OF INC	LIABILITY LIMIT	*Corporate Seal*
	Signature(s)	1	2.		
	Name(s) & Title(s) *(Typed)*	1.	2.		

25-105

CORPORATE SURETY(IES) (Continued)

SURETY B	Name & Address	STATE OF INC	LIABILITY LIMIT	Corporate Seal
	Signatures	1	2	
	Names & Titles (Typed)	1	2	
SURETY C	Name & Address	STATE OF INC	LIABILITY LIMIT	Corporate Seal
	Signatures	1	2	
	Names & Titles (Typed)	1	2	
SURETY D	Name & Address	STATE OF INC	LIABILITY LIMIT	Corporate Seal
	Signature(s)	1	2	
	Name(s) & Title(s) (Typed)	1	2	
SURETY E	Name & Address	STATE OF INC	LIABILITY LIMIT	Corporate Seal
	Signature(s)	1	2	
	Name(s) & Title(s) (Typed)	1	2	
SURETY F	Name & Address	STATE OF INC	LIABILITY LIMIT	Corporate Seal
	Signature(s)	1	2	
	Name(s) & Title(s) (Typed)	1	2	
SURETY G	Name & Address	STATE OF INC	LIABILITY LIMIT	Corporate Seal
	Signature(s)	1	2	
	Name(s) & Title(s) (Typed)	1	2	

BOND PREMIUM ▶	RATE PER THOUSAND $	TOTAL $

INSTRUCTIONS

1. This form is authorized for use in connection h contracts for construction work or the furnishing supplies or services. There shall be no deviation m this form without approval by PLN.

2. The full legal name and business address of the ncipal shall be inserted in the space designated 'incipal" on the face of this form. The bond shall be ned by an authorized person. Where such person is ning in a representative capacity (e.g., an attorney- 'act), but is not a member of the firm, partnership, joint venture, or an officer of the corporation olved, evidence of his authority must be furnished.

3. (a) Corporations executing the bond as sureties st be authorized to act as sureties. Where more than ingle corporate surety is involved, their names and resses (city and state) shall be inserted in the spaces (Surety A, Surety B, etc.) headed "CORPORATE SURETY (IES)", and in the space designated "SURETY (IES)" on the face of this form only the letter identification of the Sureties shall be inserted.

(b) Where individual sureties execute the bond, they shall be two or more responsible persons. A completed Affidavit of Individual Surety, for each individual surety, shall accompany the bond. Such sureties may be required to furnish additional substantiating information concerning their assets and financial capacility as PLN may require.

4. Corporations executing the bond shall affix their corporate seals. Individuals shall execute the bond opposite the word "Seal".

5. The name of each person signing this performance bond should be typed in the space provided.

GENERAL CONDITIONS

* GC.1 CONTRACT DOCUMENTS. It is understood and agreed that the Basis of Contract Award Invitation for Bids, Instructions to Bidders, Proposal, Proposal Data, Contract Agreement, ** Performance Bond, ~~Payment Bond~~, General Conditions, ~~Special Conditions~~, Specifications, Drawings, Addenda, and Change Orders issued by the Owner or the Engineer, and specifications and engineering data furnished by the Contractor and accepted by the Owner, are each included in this Contract and the work shall be done in accordance therewith.

GC.2 DEFINITIONS. Words, phrases, or other expressions used in these contract documents shall have meanings as follows:

1. "Contract" or "contract documents" shall include the items enumerated above under CONTRACT DOCUMENTS.

2. "Owner" or "PLN" shall mean the Perusahaan Umum Listrik Negara, an Agency of the Ministry of Public Works and Power of the Government of the Republic of Indonesia named and designated in the Contract Agreement as "Party of the First Part", acting through its duly authorized agents. All notices, letters, and other communication directed to the Owner shall be addressed and delivered to:

   Director of Construction
   Perusahaan Umum Listrik Negara
   Jalan Sunan Ngampel 1
   Kebajoran Baru
   Jakarta, Indonesia
   Cable address: PLNPST Jakarta Indonesia

3. "Contractor", "Manufacturer", or "Supplier" shall mean the corporation, company, partnership, firm, or individual named and designated in the Contract Agreement as the "Party of the Second Part", who has entered into this Contract for the performance of the work covered thereby, and its, his, or their duly authorized representatives.

4. "Subcontractor" shall mean and refer only to a corporation, partnership, or individual having a direct contract with the Contractor for performing work covered by these contract documents.

5. "Engineer" shall mean the firm of Black & Veatch International, Consulting Engineers, 1500 Meadow Lake Parkway, (mailing address P.O. Box 8405), Kansas City, Missouri 64114, (or P.O. Box 3149 Jakarta, Indonesia) or its duly authorized agents.

* Added for Contract

** Not included in Contract
(PLN - 6104)
(EQUIPMENT & ERECTION)
061573

6. "USA" shall mean the United States of America.

7. "AID" shall mean the United States Government, Department of State, Agency for International Development or any successor agency of the United States Government.

8. "Date of contract", or equivalent words, shall mean the date written in the first paragraph of the Contract Agreement; that is, the date of final signature by PLN.

9. "Contract effective date" shall mean that date when both the signed contract is approved by AID and an irrevocable letter of credit is established in a United States of America bank.

10. "Day" or "days", unless herein otherwise expressly defined, shall mean a calendar day or days of 24 hours each.

11. "The work" shall mean the equipment, supplies, materials, labor, and services to be furnished under the contract and the carrying out of all obligations imposed by the contract documents.

12. "Drawings" or "plans" shall mean all (a) drawings furnished by the Owner as a basis for proposals, (b) supplementary drawings furnished by the Owner to clarify and to define in greater detail the intent of the contract drawings and specifications, (c) drawings submitted by the successful bidder with his proposal, provided such drawings are acceptable to the Owner, (d) drawings furnished by the Owner to the Contractor during the progress of the work, and (e) engineering data and drawings submitted by the Contractor during the progress of the work, provided such drawings are acceptable to the Engineer.

13. Whenever in these contract documents the words "as ordered", "as directed", "as required", "as permitted", "as allowed", or words or phrases of like import are used, it shall be understood that the order, direction, requirement, permission, or allowance of the Owner or Engineer is intended only to the extent of judging compliance with the terms of the contract; none of these terms shall imply the Owner or the Engineer has any authority or responsibility for supervision of the Contractor's forces or construction operations, such supervision and the sole responsibility therefor being strictly reserved for the Contractor.

14. Similarly the words "approved", "reasonable", "suitable", "acceptable", "proper", "satisfactory", or words of like effect and import, unless otherwise particularly specified herein, shall mean approved, reasonable, suitable, acceptable, proper, or satisfactory in the judgment of the Owner or Engineer, to the extent provided in "12" above.

15. Whenever in these contract documents the expression "it is understood and agreed" or an expression of like import is used, such expression means the mutual understanding and agreement of the parties executing the Contract Agreement.

16. "Startup" shall mean the time period required to bring the steam-electric generating unit from an inactive condition, when construction is essentially complete, to the state ready for commercial operation. The startup period shall include preliminary inspection and check-out of equipment and supporting subsystems; trial operation of supporting equipment and subsystems; initial operation of the complete steam-electric generating unit; operation of the complete unit to obtain data, perform calibration and corrective work; shutdown, inspection and adjustment prior to obtaining commercial operating status.

17. "Initial operation" shall mean the first integral operation of the complete steam-electric generating unit with subsystems and supporting equipment in service or available for service.

18. "Commercial operation" shall mean the condition of operation in which the complete steam-electric generating unit is officially declared by the Owner to be available for continuous operation at variable loads up to and including rated capacity.

19. "Official acceptance" shall mean the Owner's written acceptance of all work performed under this Contract.

GC.3 EXECUTION OF CONTRACT. After appropriate AID approval, copies of the contract documents will be prepared by the Engineer. All copies will be submitted to the Contractor and the Contractor shall execute the Contract Agreement, insert executed copies of the required bonds and power of attorney, and submit all copies to the Owner. The date of contract on the contract and bond forms shall be left blank for filling in by the Owner. The certification date on the power of attorney shall also be left blank for filling in by the Owner.

Copies of engineering data, special forms, or other documents furnished by the Contractor, which are required to be incorporated in the contract shall be supplied to the Engineer.

The Owner will execute all copies, insert the date of contract on the bonds and power of attorney and make distributions. Distribution will be one copy each to the Owner, Engineer, Contractor, and Surety.

After receipt of the executed contract documents, the Engineer will prepare 17 additional copies of the documents for distribution to the Owner, Engineer, Contractor and AID.

* GC.4 LEGAL ADDRESSES. ~~BOTH THE~~ business address of the Contractor as given in the Proposal ~~AND THE CONTRACTOR'S OFFICE IN THE VICINITY OF THE WORK,~~ are hereby designated as the places to which all notices, letters, and other communications to the Contractor may be mailed or delivered. ~~DELIVERY TO EITHER OF THESE ADDRESSES SHALL BE DEEMED AS DEBARRING TO THE CONTRACTOR.~~ The address of the Owner appearing in Article GC.2 is hereby designated as the place to which all notices, letters, and other communications to the Owner may be mailed or delivered. The delivery by one party to the other party at an address so designated, or the depositing in any mail box regularly maintained by the post office, of any notice, letter, or other communication addressed to such address, postage prepaid, registered or certified mail, with return receipt requested, shall be deemed sufficient service thereof, and the date of said service shall be the date of such delivery or mailing. Either party may change the said address or addresses at any time by an instrument in writing delivered to the Engineer and to the other party. Nothing herein contained shall be deemed to preclude or render inoperative the service of any notice, letter, or communication upon either party personally.

GC.5 SCOPE AND INTENT OF CONTRACT DOCUMENTS. The specifications and drawings are intended to supplement but not necessarily duplicate each other. Any work exhibited in the one and not in the other shall be executed as if it had been set forth in both, so that the work will be constructed according to the complete design as determined by the Engineer.

Should anything necessary for a clear understanding of the work be omitted from the specifications and drawings, or should the requirements appear to be in conflict, the Contractor shall secure written instructions from the Engineer before proceeding with the work affected thereby. It is understood and agreed that the work shall be performed according to the contract documents.

GC.6 INDEPENDENT CONTRACTOR. The relationship of the Contractor to the Owner shall be that of an independent contractor.

GC.7 ASSIGNMENT AND SUBCONTRACTING. The Contractor shall not assign or subcontract the work, or any part thereof, without the previous written consent of the Owner, Engineer, and AID, nor shall he assign, by power of attorney or otherwise, any of the money payable under this Contract unless written consent of the Owner has been obtained. No right under this Contract, nor claim for any money due or to become due hereunder shall be asserted against the Owner, or persons acting for the Owner, by reason of any so-called assignment of this Contract or any part thereof, unless such assignment has been authorized by the written consent of the Owner and AID. In case the Contractor is permitted to assign moneys due

* Revised for Contract

or to become due under this Contract, the instrument of assignment shall contain a clause subordinating the claim of the assignee to all prior liens for services rendered or materials supplied for the performance of the work.

Should any subcontractor fail to perform in a satisfactory manner the work undertaken by him, his subcontract shall be immediately terminated by the Contractor upon notice from the Owner. The Contractor shall be as fully responsible and accountable to the Owner for the acts and omissions of his subcontractors, and of persons either directly or indirectly employed by them, as he is for the acts and omissions of persons directly employed by him. Nothing contained in this Contract shall create any contractual relation between any subcontractor and the Owner.

GC.8 ORAL STATEMENTS. It is understood and agreed that the written terms and provisions of this agreement shall supersede all oral statements of representatives of the Owner, and oral statements shall not be effective or be construed as being a part of this Contract.

GC.9 REFERENCE STANDARDS. Reference to the standards of any technical society, organization, or association, or to codes of local or state authorities, shall mean the latest standard, code, specification, or tentative standard adopted and published at the date of taking bids, unless specifically stated otherwise.

GC.10 NO WAIVER OF RIGHTS. Neither the inspection by the Owner or Engineer or any of their officials, employees, or agents, nor any order by the Owner or Engineer for payment of money, or any payment for, or acceptance of, the whole or any part of the work by the Owner or Engineer, nor any extension of time, nor any possession taken by the Owner or its employees shall operate as a waiver of any provision of this Contract, or of any power herein reserved to the Owner, or any right to damages herein provided, nor shall any waiver of any breach in this Contract be held to be a waiver of any other or subsequent breach.

GC.11 AUTHORITY OF THE ENGINEER. To prevent delays and disputes, and to discourage litigation, it is agreed by the parties to this Contract that the Engineer shall determine all questions in relation to the work.

Duties of the Engineer with respect to the work performed under this Contract include, but are not necessarily limited to the following: interpretation of these specifications and documents; review of engineering data submitted by the Contractor; witnessing tests of equipment and material prior to shipment as required; certification of the delivery of equipment and materials to the plant site; inspection and acceptance or rejection of equipment and materials delivered to the plant site; inspection and acceptance or rejection of work constructed at the plant site; assisting the Owner in preparation and issuance of change orders; certification of the work in progress in connection with construction payments; review of acceptance test procedures, schedules, and results; and final inspection of the work.

* If in the opinion of the Contractor a decision made by the Engineer is not in accordance with the meaning and intent of the contract, either party may file with the Engineer and the other party to the contract, within 30 days after receipt of the decision, a written objection to the decision. Failure to file an objection within the allotted time will be considered acceptance of the Engineer's decision and the decision shall become final and conclusive.

The Engineer's decision and the filing of the written objection thereto shall be a condition precedent to the right to request arbitration or to start action in court.

It is the intent of this agreement that there shall be no delay in the execution of the work and the decision of the Engineer as rendered shall be promptly observed.

GC.12 ENGINEERING INSPECTION. The Owner may appoint such inspectors as the Owner deems proper to inspect the materials furnished and the work performed for compliance with the drawings and specifications. The Contractor shall furnish all reasonable assistance required by the Engineer, or inspectors, for the proper inspection of the work.

The Contractor shall obey the directions and instructions of the Engineer or inspector when they are consistent with the obligations of this Contract. Should the Contractor object to any order given by any inspector, the Contractor may make written appeal to the Engineer for a decision.

Inspectors and other authorized representatives of the Owner or Engineer shall be free at all times to perform their duties. Any attempted intimidation of one of them by the Contractor or his employees shall be sufficient reason, if the Owner so decides, to terminate the contract.

Inspection of the work by the Engineer, or inspectors, will be performed at the factory of the manufacturer prior to shipment of the equipment and materials and at the Owner's plant site during the progress of the erection work
** if the work under this Contract includes erection of the equipment and materials. Procedures whereby the Contractor shall notify the Owner and the Engineer a reasonable time in advance that the work or any part thereof is ready for inspection shall be established by agreement between the Engineer and the Contractor.

Inspection shall not relieve the Contractor from any obligation to construct the work strictly in accordance with the drawings and specifications. Work not so performed shall be removed and replaced by the Contractor at his own expense.

GC.13 RIGHT OF OWNER TO TERMINATE CONTRACT. If the work to be done under this Contract is abandoned by the Contractor; or if this Contract is assigned by him without the written consent of the Owner; or if the Contractor is adjudged bankrupt; or if a general assignment of his assets is made for the

* Refer to Item 5 of Addendum 1

** Revised for Contract

benefit of his creditors; or if a receiver is appointed for the Contractor or any of his property; or if at any time the Engineer certifies in writing to the Owner that the performance of the work under this Contract is being unnecessarily delayed, that the Contractor is violating any of the conditions of this Contract, or that he is executing the same in bad faith or otherwise not in accordance with the terms of said contract; or if the work is not substantially completed within the time named for its completion or within the time to which such completion date may be extended; then the Owner may serve written notice upon the Contractor and his surety of the Owner's intention to terminate this Contract. Unless within 30 days after the serving of such notice, a satisfactory arrangement is made for continuance, this Contract shall terminate. In the event of such termination, the surety shall have the right to take over and complete the work, provided that if the surety does not commence performance within 60 days, the Owner may take over and prosecute the work to completion, by contract or otherwise. The Contractor and his surety shall be liable to the Owner for all excess cost sustained by the Owneer by reason of such prosecution and completion. The Owner may take possession of, and utilize in completing the work, all materials, equipment, tools, and plant on the site of the work.

GC.14 HINDRANCES AND DELAYS. The Contractor expressly agrees that the period of time named in the Contract Agreement to complete all work includes allowance for all hindrances and delays incident to the work. No claim shall be made by the Contractor for hindrances or delays from any cause during the progress of the work, except as provided under SUSPENSION OF
* WORK and FORCE MAJEURE, and in the Basis of Contract Award.

GC.15 SUSPENSION OF WORK. The Owner reserves the right to suspend and reinstate execution of the whole or any part of the work without invalidating the provisions of the contract. Orders for suspension or reinstatement of work will be issued by the Owner to the Contractor in writing. The time for completion of the work will be extended for a period equal to the time lost by reason of the suspension.

Changes in Contractor's price or delivery schedules which occur during a period of suspension ordered by the Owner shall not affect this Contract except as agreed by the Owner and the Contractor. If the Contractor proposes to apply such changes to this Contract, he shall present his proposal to the Owner in writing. During the 60 day period from and after the receipt by the Owner of such written proposal, the Owner shall be permitted to reinstate the work without change. If the work is not reinstated during this 60 day period, the Owner and the Contractor shall agree upon reasonable and proper changes or the Owner may cancel the unshipped portion of the work.

Changes in delivery schedule shall mean extension of the scheduled time of delivery beyond the number of days of the suspension period.

Any necessary and demonstrable costs incurred by the Contractor as a result of suspension of work will be paid by the Owner, provided such costs are substantiated to the satisfaction of the Owner.

* Revised For Contract

GC.16 FORCE MAJEURE. Should the Contractor be delayed in the final completion of the work by any cause or causes outside of and beyond the control of the Contractor, such as but not limited to acts of a public enemy, war, blockages, insurrections, riots, epidemics, civil disturbances, strikes, fire, and other causes not within the control of the Contractor, which makes the performance of the contract unfeasible and which by the exercise of due diligence the Contractor in performance of the contract is unable to overcome, then an extension of time sufficient to compensate for the delay, as determined by the Engineer, shall be granted by the Owner, and the Contractor shall not be charged for liquidated damages for such delay; provided, however, that the Contractor shall give the Owner and the Engineer prompt notice in writing of the cause of delay in each case and shall demonstrate that he has used all reasonable means to minimize the delay.

If any such delay, except failure to reach agreement as set forth herein, lasts for more than 60 days, the parties shall immediately consult with one another for the purpose of agreeing upon the basis on which the Contractor shall resume work at the end of the delay. If they do not agree upon a solution of the problems involved, including adjustment of the price, within 90 days from the beginning of such delay, then either party may, by written notice, cancel that portion of the work which is delayed and in such event the Owner shall pay to the Contractor reasonable and proper cancellation charges as mutually agreed.

Extensions of time will not be granted for delays caused by unavoidable
* weather, unavoidable delay delivery / inadequate construction force, or the failure of the Contractor to place orders for equipment or materials sufficiently in advance to insure delivery when needed.

GC.17 DELAYED SHIPMENT. The Owner reserves the right to order (by written notice) the Contractor to delay shipment of equipment and materials herein contracted. In the event such a delay is ordered by the Owner the Owner will pay the Contractor reasonable and proper extra charges incurred by the Contractor as a result of the delay. Such extra charges shall include storage charges, handling charges, insurance, interest on investment, transportation charges to the storage facility, and preservation during storage. In the event storage is necessary, the Contractor shall be guided by the Owner's instructions in respect to the removal from storage and the arrangements for export shipment in accordance with the terms of the Contract.

GC.18 TERMINATION FOR THE CONVENIENCE OF THE OWNER. The Owner reserves the right to terminate and cancel this Contract in whole or in part at any time by written notice to the Contractor. In the event of such termination, the Contractor agrees to waive any claims for damages including loss of anticipated profits on account thereof. The Owner will pay to the Contractor reasonable and proper cancellation charges which are demonstrable to the satisfaction of the Owner. In the event of such termination, provisions of these contract documents relating to specific warranties and guarantees and to agreements to hold harmless or indemnify the other party to the Contract shall remain in full force and effect to the extent provided therein.

* Revised For Contract

Upon receipt of notice of termination, the Contractor shall discontinue the work on the date and to the extent specified in the notice, make every reasonable effort to procure cancellation of all orders and subcontracts to the extent of their relationship to the work terminated and upon terms satisfactory to the Owner; halt all further purchasing or subcontracting activity applicable to the work terminated; and assist the Owner in maintenance, protection, and disposition of work already acquired by the Owner under this Contract.

GC.19 MODIFICATIONS. The Contractor shall modify the work whenever so ordered by the Owner and such modifications shall not affect the validity of the contract. Modifications may involve increases or decreases in the amount of the work for which appropriate contract price adjustment will be made.

All modifications shall be made under the authority of duly executed change orders issued and signed by the Owner, approved by AID, and accepted and signed by the Contractor.

If modifications affect the delivery and completion schedule of the work, appropriate adjustments to the schedules will be made as provided for in the article FORCE MAJEURE in these GENERAL CONDITIONS.

GC.19.1 Extra Work. Modifications which increase the amount of the work shall be paid for according to the amount actually done.

Claims for extra work will not be paid unless the work covered by such claims was authorized in writing by the Owner or Engineer. The Contractor shall not have the right to prosecute or maintain either an arbitration proceeding or an action in court to recover for extra work unless the claim is based upon a written order from the Owner or Engineer. Payments for extra work will be based on lump sums plus a percentage allowance agreed to by the Owner or Engineer and the Contractor before the extra work is started.

For the purpose of determining whether proposed extra work will be autho-
* rized, ~~or for determining the payment method for extra work,~~ the Con-
tractor shall submit to the Engineer, for approval, a detailed cost estimate for proposed extra work. The estimate shall show itemized quantities and charges for all elements of direct cost. Charges for the Contractor's and subcontractor's extra profit, extra general superintendence, extra field office expense, and extra overheads shall be shown as a percentage addition to the total estimated direct cost. Unless otherwise agreed upon by the Contractor and the Owner, such percentage additions shall be 15 per cent for the extra work ~~performed by the contractor's own forces or~~
* ~~20 per cent for extra work performed by a subcontractor.~~

* Revised for Contract

When payment for extra work is based on actual cost of work performed at the Owner's plant site, the Contractor will be paid the actual field cost plus an allowance of 15 per cent if the extra work is performed by the Contractor's own forces or 20 per cent (including the subcontractor's percentage allowance) if the extra work is performed by a subcontractor. The allowance will be paid as full compensation for the Contractor's and subcontractor's extra profit, extra general superintendence, extra field office expense, extra overheads, and all other elements of extra cost not defined herein as actual field cost.

The actual field cost shall include only those extra costs for labor and material expended in direct performance of the extra work and may include:

a. The actual payroll cost of all workmen such as laborers, mechanics, craftsmen, and foremen

b. The Contractor's or subcontractor's net cost for materials and supplies

c. The rental charge for vehicles and construction equipment

d. The transportation charges for equipment

e. The charges for extra power, fuel, lubricants, water, and special services

f. The charges for extra payroll taxes, bond premiums, and insurance premiums

The form in which actual field cost records are kept, the construction methods, and the type and quantity of equipment used shall be acceptable to the Engineer.

Construction equipment which the Contractor has on the jobsite and which is of a type and size suitable for use in performing the extra work shall be used. The hourly rental charges for equipment shall be as agreed upon with the Engineer and the Owner and shall apply to only the actual time the equipment is used in performing the extra work.

When extra work requires the use of equipment which the Contractor does not have on the jobsite, the Contractor shall obtain the concurrence of the Engineer before renting or otherwise acquiring additional equipment. The rental charges for the additional equipment shall be as agreed upon with the Engineer and the Owner.

* Deleted for Contract

GC.19.2 Decreased Work. If a modification decreases the amount of work to be done, such decrease shall not constitute the basis for a claim for damages or anticipated profits on work affected by such decrease. The Engineer shall determine on an equitable basis the amount of (a) credit due the Owner for contract work not done as a result of an authorized change, (b) allowance to the Contractor for any actual loss incurred in connection with the purchase, delivery, and subsequent disposal of materials or equipment required for use on the work as planned and which could not be used in any part of the work as actually built, and (c) any other adjustment of the contract amount where the method to be used in making such adjustment is not clearly defined in the contract documents.

* Unless otherwise agreed upon by the Owner and the Contractor, the credit due the Owner for reductions in the amount of work to be done shall be the estimated field cost of the deleted work plus an overhead allowance of:

Ten per cent of the estimated field cost if the work was to have been done by the Contractor's own forces, or

Fifteen per cent of the estimated field cost if the work was to have been done by a subcontractor.

Field cost referred to above shall include the category of costs hereinbefore listed as actual field costs, items (a) to (f) inclusive of the paragraph entitled "Extra Work".

GC.20 ARBITRATION. Except as may otherwise be provided in this Contract, any dispute or difference arising under this Contract which cannot be settled by agreement between the parties to the dispute shall be submitted to arbitration in the manner specified herein.

Within 30 days from the date of failure to reach agreement as established by written notice by either party to the dispute to the other, each party to the dispute shall appoint an arbitrator. If the two arbitrators thus appointed fail to agree upon a decision and award within 30 days of the date of appointment of the second arbitrator, they shall select a third arbitrator by agreement. If either party to the dispute fails to appoint an arbitrator within the allotted time, or if the two arbitrators cannot agree upon a third arbitrator within 10 days, then the parties to the dispute, or either of them, shall apply to the Court of Arbitration of the International Chamber of Commerce, 38 Cour Albert Ier, Paris VIII for the appointments which have not been made as stated.

The arbitration proceedings shall be conducted in accordance with the Rules of Conciliation and Arbitration of the International Chamber of Commerce. The decision shall be by majority vote of the arbitrators and shall be final, conclusive, and binding upon the parties thereto. Each party shall bear the cost of its appointed arbitrator. The cost of the third arbitrator if one be appointed, shall be borne by the parties as the arbitrators may determine.

* Deleted for Contract

* All arbitration proceedings shall be conducted in Indonesia and in accordance with Indonesian law. Reference to arbitration shall be a condition precedent to any other action of law.

The Owner shall have the right to institute suit in any court of competent jurisdiction in Indonesia to enforce any decision or award rendered in arbitration proceedings.

The Contractor shall not cause a delay of the work during any arbitration proceedings, except by agreement with the Owner. It is understood and agreed by the parties to the contract that no requirement or statement herein shall be interpreted as curtailing the power of the Engineer to determine the amount, quality, and acceptability of work and materials.

GC.21 LAWS AND REGULATIONS.

GC.21.1 Non-Indonesian Laws and Regulations. The Contractor shall observe and comply with all applicable ordinances, laws, and regulations in the locality where equipment may be manufactured. The Contractor shall protect and indemnify the Owner and the Owner's officers and agents against any claim or liability arising from or based on violation of such ordinances, regulations, or laws.

GC.21.2 Indonesian Laws and Regulations. The Contractor shall observe, comply with and respect Indonesian laws, rules and regulations and shall not interfere with Indonesian political or religious affairs either directly or indirectly. The Contractor shall comply with such other rules
** and regulations as the Owner and Engineer may establish from time to time with respect to the construction work and personnel employed by the Contractor.

The Contractor shall, in all dealings with labor in his employ, have due regard to all recognized festival days of rest and religious or other customs.

The Contractor shall not give or barter, or otherwise dispose of, to any person or persons, any arms or ammunition of any kind, or permit or suffer the same as aforesaid.

In the event of any outbreak of illness of an epidemic nature, the Contractor shall comply with and carry out such regulations, orders and requirements as may be made by the Government of Indonesia or the local medical or sanitary authorities, for the purpose of dealing with and overcoming the same.

* Refer to Item 2 of Addendum 3
** Deleted For Contract

GC.22 TAXES PERMITS AND LICENSES.

GC.22.1 Non-Indonesian Taxes, Permits, and Licenses. The Contractor shall pay all sales, use, income and other taxes and duties, tariffs, and imports lawfully assessed against the Owner or the Contractor (excluding the Republic of Indonesia or any political subdivision thereof) in connection with the work included in this Contract. The Contractor shall obtain and pay for all USA or other non-Indonesian licenses, permits, and inspections required for the work including the cost of securing all export licenses and permits for materials, equipment, supplies and personnel exported from the USA or other country to Indonesia.

GC.22.2 Indonesian Taxes, Permits, and Licenses. The Contractor will be exempt from any import duties and charges levied by Indonesian law on the equipment and materials by virtue of the Owner's relevant exemption privileges. The exemption shall also include stamp duties imposed on the
* Contract. ~~The Owner will reimburse the Contractor for any such Indonesian taxes that the Contractor is required to pay in order to perform the work under this Contract.~~

The Contractor and his non-Indonesian field personnel will be exempt from the payment of Indonesian income taxes on payments received under this Contract and from custom duties, harbor dues and other charges for importation of personal effects. Indonesian subcontractors performing work under this Contract for the Contractor will be subject to Indonesian taxes.

Instruments, tools, machinery, and vehicles required for the performance of the work in Indonesia and imported on the condition that they will be exported at the completion of the work will be exempted from customs duties and other such charges.

GC.23 PATENTS. Royalties and fees for patents covering materials, articles, apparatus, devices, equipment, or processes used in the work, shall be included in the contract amount. The Contractor shall satisfy all demands that may be made at any time for such royalties or fees and he shall be liable for any damages or claims for patent infringements. The Contractor shall, at his own cost and expense, defend all suits or proceedings that may be instituted against the Owner for alleged infringement of any patents involved in the work and, in case of an award of damages, the Contractor shall pay such award. Final payment to the Contractor by the Owner will not be made while any such suit or claim remains unsettled. The Contractor's liability for patent infringement is limited to patents held in the country in which the equipment is manufactured.

* Refer to Item 3 of Addendum 4

In the event any apparatus or equipment, or any part thereof furnished by the Contractor, is in such suit or proceedings held to constitute infringement, and its use is enjoined, the Contractor shall, at his option, and at his own expense, either: procure for the Owner the right to continue said apparatus, equipment, or part thereof; replace it with noninfringing apparatus or equipment; or modify it so it becomes non-infringing.

GC.24 MATERIALS AND EQUIPMENT. Unless specifically provided otherwise in each case, all materials and equipment furnished for permanent installation in the work shall conform to applicable standard specifications and shall be new, unused, and undamaged when installed or otherwise incorporated in the work. No such material or equipment shall be used by the Contractor for any purpose other than that intended or specified, unless such use is specifically authorized by the Owner in each case.

GC.25 GUARANTEE. The Contractor guarantees that the work herein contracted will be as specified and will be free from defects in design, workmanship, and materials. If within the guarantee period the work fails to meet the provisions of this guarantee, the Contractor shall promptly correct any defects, including nonconformance with the specifications, by adjustment, repair, or replacement of all defective parts or materials.

* The guarantee period shall begin on the date of commercial operation, and shall end 12 months later.

If manufacturer's field representatives are included in the Contract, such supervision shall be furnished by the Contractor without cost for the correction of any defects.

The cost of all materials, parts, labor, transportation, supervision, special tools, and supplies required for replacement or repair of parts and for correction of defects shall be paid by the Contractor or by the surety.

When it is necessary to dismantle piping, ducts, equipment or other work not performed by the Contractor in order to obtain access to the Contractor's work, the cost of all such dismantling and reassembly will be paid by the Owner. All costs of dismantling and reassembly of the work performed under this Contract shall be paid by the Contractor.

This guarantee shall be extended to cover all repairs and replacements furnished under the guarantee and the period of the guarantee for each such repair or replacement shall be one year from the date of installation thereof.

* Refer to Page 2 of Contractor's Proposal letter dated 5 October, 1973

The Contractor will be given an opportunity to confirm the existence of the defect but he shall not delay the correction while making such determination.

If within 20 days after the Owner gives the Contractor notice of a defect, the Contractor neglects to make or undertake with due diligence to make the necessary corrections, the Owner is hereby authorized to make the corrections himself or order the work to be done by a third party, and the cost of the corrections shall be paid by the Contractor. The Owner will be permitted to make repairs or replacements on equipment without affecting the guarantee or without prior notice to the Contractor so long as the repairs or replacements involve the correct installation of replacement parts. The Owner shall also be permitted to adjust or test equipment as outlined in instruction manuals provided by the Contractor or as directed by the Contractor's erection or operating superintendent.

In the event of an emergency where, in the judgment of the Owner, delay would cause serious loss or damage, repairs or adjustments may be made by the Owner or a third party chosen by the Owner without advance notice to the Contractor and the cost of the work shall be paid by the Contractor, or by the surety. In the event such action is taken by the Owner, the Contractor will be notified promptly and shall assist wherever possible in making the necessary corrections.

GC.26 INSURANCE. The Contractor shall secure and maintain insurance of such types and in such amounts as may be necessary to protect himself and the interests of the Owner against all hazards or risks of loss as hereinafter specified. The form and limits of such insurance, together with the underwriter thereof in each case, shall be acceptable to the Owner but regardless of such acceptance it shall be the responsibility of the Contractor to maintain adequate insurance coverage at all times. Failure of the Contractor to maintain adequate coverage shall not relieve him of any contractual responsibility or obligation.

In the event of loss or damage to equipment and materials furnished under this Contract, the Contractor shall file all damage claims and shall be responsible for the replacement or repair of the work insured hereunder. Passage of title shall not relieve the Contractor of responsibility for loss or damage to the work.

The Contractor shall file with the Owner satisfactory certificates, or copies, of the policies providing the specified insurance. Certificates of insurance covering physical loss or damage to equipment and materials shall be submitted at least 60 days before the first shipment of the equipment and materials. ~~A certificate for each of the other insurance~~
* ~~policies shall be submitted at least 60 days prior to the start of the~~ ~~contractor's operations in/thereof./~~ Each certificate shall state that the Owner will be given 60 days written notice before the change, cancellation, or expiration of the included policies.

* Deleted For Contract

* The workmen's compensation, automobile liability, and general liability insurance specified shall apply only to field erection and field services such as manufacturer's technical direction, field testing, and similar work not included as part of the normal manufacturing process.

GC.26.1 Workmen's Compensation and Employer's Liability. This insurance shall protect the Contractor against all claims under applicable workmen's compensation laws. The Contractor shall also be protected against claims for injury, disease, or death of employees which, for any reason, may not fall within the provisions of a workmen's compensation law. The policy covering workmen within the USA shall include an "all states" endorsement.

The liability limits shall not be less than the following:

Workmen's Compensation	
Employees within the USA	Statutory
Personnel outside the USA who are US citizens, residents of the USA, or hired in the USA	Payments comparable to those provided by the Longshoremen's and Harbor Worker's Act (33 USC 901 et seq)
Other employees	Payments meeting at least the minimum legal requirements applicable by reason of the point of hiring and the site of the work
Employer's Liability (for all employees)	$100,000 each person

GC.26.2 Comprehensive Automobile Liability. This insurance shall be written in comprehensive form and shall protect the Contractor against all claims for injuries to members of the public and damage to property of others arising from the use of motor vehicles, and shall cover operation on or off the site of all motor vehicles licensed for highway use, whether they are owned, nonowned, or hired.

The liability limits per vehicle shall not be less than:

Bodily injury	$50,000 each person $100,000 each occurrence
Property damage	$100,000 each occurrence

* Deleted For Contract

* GC.26.1 Comprehensive General Liability. This insurance shall be written in comprehensive form and shall protect the Contractor against all claims arising from injuries to members of the public or damage to property of others arising out of any act or omission of the Contractor or his agents, employees, or subcontractors or from strikes, riots, and civil commotions. In addition, this policy shall specifically insure the contractual liability assumed by the Contractor under the article entitled DEFENSE OF SUITS. The Contractor shall notify the Owner of any contractual liability assumed hereunder that is not insurable.

The policy shall insure all of the hazards incident to the work including, but not limited to, the hazards enumerated below whenever such hazards are involved in the Contractor's work:

(1) Premises - Operations

(2) Elevators and hoists

(3) Independent contractors (Contractor's protective liability insurance for protection against suits arising out of negligence of subcontractors.)

(4) Products including completed operations to be in force for one year after official acceptance of the work.

(5) Contractual liability

To the extent that any contractor's work calls for blasting, explosive or underground work, his comprehensive general liability insurance shall be written to eliminate explosion, collapse, and underground damage (XCU) exclusions.

The liability limits shall not be less than:

Bodily injury	$250,000 each person $500,000 each occurrence
Property damage	$500,000 each occurrence $500,000 aggregate

GC.26.4 Installation Floater. This insurance shall protect the Contractor, the Owner, and the Engineer from all insurable risks of physical loss or damage to materials and equipment while the materials and equipment are in transit from the Contractor's factory to the USA port of shipment; during storage and loading for ocean shipment; during unloading and storage at the receiving port; during loading and transit from the receiving port to the construction site; ~~during storage, installation and testing at the~~ ** ~~site, and until beneficial acceptance of the work by the Owner.~~ and until the equipment and materials are unloaded at the plant site, inspected, and received into custody of the Owner or his designated installation contractor or until 60 days from unloading at the port of Semarang, whichever shall first occur. It shall be of the "all risks" type, with coverages designed for the circumstances which may occur in the particular work included in this Contract. The coverage shall be for an amount not less than the insurable value of the work at completion.

* Deleted For Contract
** Revised For Contract
(PLN - 6104)
(EQUIPMENT & ERECTION)
061573

Installation floater insurance shall provide for losses to be payable to the Contractor, the Owner, and the Engineer as their interests may appear and shall contain a waiver of subrogation rights against the insured parties.

Installation floater insurance shall be coordinated with the ocean cargo insurance specified hereinafter to provide complete coverage of equipment
* and materials at all times ~~until final acceptance by the Owner~~ in accordance with this Article GC.26.4.

Certificates of insurance covering installation floater insurance shall quote the insuring agreement and all exclusions as they appear in the policy; or in lieu of certificates, copies of the complete policy may be submitted.

GC.26.5 Ocean Cargo Insurance. This insurance shall insure and protect the insurable interests of the Contractor and the Owner against all insurable risks of physical loss or damage to equipment and materials while aboard an ocean going vessel in transit to the Owner. This insurance shall be written for all risks including but not limited to war, riot, strike, and civil commotion. Coverage shall be for an amount not less than the cost, insurance, and freight (CI&F) value of the equipment and materials.

In the event the Contractor elects, or is directed by the Owner, to ship equipment and materials by aircraft, insurance providing coverage equivalent to that specified above for ocean cargo shall be provided.

GC.26.6 Other Insurance. The Contractor shall secure and maintain such other insurance coverage as may be required to protect against perils and legal liabilities not covered under the foregoing coverages. The Contrac-
** tor's legal liability to its non-Indonesian employees in the event of their capture and imprisonment as a result of war - whether declared or undeclared - shall be insured under the provision that such an insurance will be terminated in the event of a final judicial determination absolving the Contractor from legal liability for such capture or imprisonment.

** GC.27 TRANSFER OF TITLE. The title of ownership for equipment and materials furnished under this Contract shall be passed to the Owner at the time of shipment of the equipment and materials from the USA port of shipment. This transfer of title shall not be construed to mean an acceptance of the equipment and materials; the Contractor shall continue to be responsible for the quality and performance of such equipment and materials, and for their compliance with the specifications, until final acceptance of the work and the fulfillment of the guarantee provisions of this Contract.

Transfer of title shall not relieve the Contractor from responsibility for all risk of loss or damage to the equipment and materials as specified under the article INSURANCE in these GENERAL CONDITIONS.

* Revised For Contract

** Deleted for Contract

** Refer to Page 2 of Contractor's Proposal letter dated 5 October 1973

GC.28 DEFENSE OF SUITS. In case any action in court is brought against the Owner or Engineer, or any officer or agent of either of them, for the failure, omission, or neglect of the Contractor to perform any of the covenants, acts, matters, or things by this Contract undertaken; or for injury or damage caused by the alleged negligence of the Contractor or his subcontractors or his or their agents, or in connection with any claim based on lawful demands of subcontractors, workmen, material men, or suppliers; the Contractor shall indemnify and save harmless the Owner and the Engineer and their officers and agents, from all losses, damages, costs, expenses, judgments, or decrees arising out of such action.

*

GC.29 RELEASE OF LIABILITY. Acceptance by the Contractor of the last payment shall be a release to the Owner and every officer and agent thereof, from all claims and liability hereunder for anything done or furnished for, or relating to the work, or for any act or neglect of the Owner or of any person relating to or affecting the work.

The last payment by the Owner to the Contractor shall constitute final acceptance of all work performed under this Contract and shall be a release to the Contractor and his surety from all contractual liabilities and responsibilities to the Owner except those liabilities and responsibilities assumed under the article entitled GUARANTEE in these GENERAL CONDITIONS.

GC.30 CLAIMS FOR LABOR AND MATERIALS. The Contractor shall indemnify and save harmless the Owner from all claims for labor and materials furnished under this Contract. When requested by the Owner, the Contractor shall submit satisfactory evidence that all persons, firms, or corporations who have done work or furnished materials under this Contract, for which the Owner may become legally liable, have been fully paid or satisfactorily secured. In case such evidence is not furnished or is not satisfactory, an amount will be retained from money due the Contractor which in addition to any other sums that may be retained will be sufficient, in the opinion of the Owner, to liquidate all such claims. Such sum will be retained until the claims as aforesaid are fully settled or satisfactorily secured.

GC.31 CONTRACTOR'S PRICE BREAKDOWN. The Contractor shall prepare and submit to the Engineer for approval a breakdown of the contract price according to the system of accounts provided by the Owner. The Contractor's price breakdown shall be submitted to and approved by the Engineer before any payments are made under this Contract. Each invoice submitted for payment shall be prepared in accordance with the price breakdown approved by the Engineer.

The sum of the items listed in the Contractor's price breakdown shall equal the contract lump sum price or prices. Overhead and profit shall not be listed as separate items.

* Insert Article GC.28.1 LIMITATION OF LIABILITY shown on Page GC-19A.

* GC.28.1 LIMITATION OF LIABILITY. Except as provided under Article GC-25, and except for claims based upon willful misconduct or gross negligence, the contractor's liability on any claim of any kind, for any loss or damage arising out of, connected with, or resulting from this contract, or from the performance or breach thereof, or from the manufacture, sale, delivery, installation or technical direction of installation, repair or use of any equipment covered by or furnished under this contract shall in no case exceed the billing price of the equipment, provided, however, that in all cases where the claim involves defective or damaged equipment supplied under this contract the Owner's exclusive remedy and the Contractor's sole liability will be limited to the correction of such defect or damage, but not in excess of the billing price of the equipment. In any event, the Contractor's liability for all of the aforesaid claims shall terminate four years after initial synchronization of the equipment.

In no event, whether as a result of breach of contract, alleged negligence or otherwise, and whether arising before or after initial synchronization, shall the Contractor be liable for special or consequential damages including, but not limited to, loss of profits or revenue, loss of use of power system, cost of capital, cost of purchased or replacement power or claims of customers of Owner for service interruptions.

* Added for Contract

An unbalanced breakdown estimate providing for overpayment of the Contractor on items of work which would be performed first will not be accepted.

GC.32 PAYMENTS. Payment for the work included in this Contract will be made in accordance with the requirements stated herein and the payment rules in Section 6.3 of AID Capital Projects Guidelines "Borrower Procurement of Equipment and Materials" M.O. 1442.3.

GC.32.1 Dollar Payments. The Owner will establish, in favor of the Contractor, an irrevocable Letter of Credit in a USA bank covering the total dollar price of the equipment and materials plus export shipping expenses * [illegible].

In accordance with AID regulations, the Contractor may designate the USA bank to issue the Letter of Credit in his favor, provided that this designation is made prior to approval of the Contract by AID and provided that the contract amount is $25,000 or more. If the Contractor designates a bank other than the bank which the Owner has selected to receive the AID Letter of Commitment, the Contractor shall pay the additional bank charges incurred.

GC.32.1.1 Dollar Payments for Equipment, Materials, Freight, and Insurance. All requests for dollar payment for equipment, materials, freight, and insurance, excepting final payment, shall be submitted to the bank holding the Letter of Credit and shall include the following documentation:

a. Executed General Accounting Office Standard Form 1034, "Public Voucher for Purchase and Services Other than Personal"

b. The Contractor's commercial invoice. Each invoice shall be marked "paid" by the Contractor except for equipment and materials of USA source and origin in which case the bank will certify by endorsement on or attached to the invoice that payment has been made.

c. AID Form 1440-3, Contractor's Certificate and Agreement with the Agency for International Development, Contractor's Invoice and Contract Abstract, executed in accordance with the instructions thereon. The insurer or carrier is not required to execute a copy of this form.

d. The following certification, signed and dated by the Contractor:

> The undersigned certifies that (1) the sales value of the equipment covered by this invoice; plus the value of equipment already delivered;

* Deleted for Contract
** Refer to Contractor's Letter HOB 7884 dated 6 May 1974
*** Refer to Item 3 of Addendum 3

plus the sales value of engineering services, labor, and purchased material for which expenditures have been made; plus the amount expended on account of commitments for equipment remaining to be supplied under the subject contract, are not less than the total payment already received or claimed against this Contract, including payments claimed under this invoice; and (2) it is complying with the terms and conditions of the subject contract.

e. Shipping documentation consisting of:

Bill of lading or substitute commercially acceptable document such as copy of ocean or charter party bill of lading, arriving bill, or parcel post receipt. The bill of lading must indicate the carrier's statement of charges.

If shipment is from free port or bonded warehouse in Indonesia, a copy of the bill of lading covering shipment from the source to the free port or bonded warehouse and a delivery receipt evidencing release from the free port or bonded warehouse shall be submitted. The date of the delivery receipt will be considered as the shipment date.

If the equipment and materials are procured from sources within AID Geographic Code 941, excluding the USA, and shipment is made on a liner vessel bearing the flag of a country within AID Geographic Code 941, excluding the USA, the bill of lading submitted must contain a certification signed by the carrier that a copy of the carrier's applicable freight rate tariff has been filed with the Resources Transportation Division, AID.

The number of copies required of the above documentation will be determined later. The AID Loan Number 497-H-024 shall appear on all documents.

* (C.31.1.2 Dollar Payments for Erection. All requests for payment of the dollar portion of the erection services under this Contract shall be submitted to the bank holding the Letter of Credit and shall include the following documentation:

a. Contractor's invoice describing the services performed, identifying the covering contract and the sections thereof which provide for such payment and the terms of payment. The invoice must be accompanied by written approval of the Engineer and Owner consenting to the payment of the invoice.

* Not included in Contract

* b. The following certification attached to, or endorsed on, the Contractor's invoice:

> "The undersigned certifies that the costs reimbursable to the Contractor and the amount payable to the Contractor in accordance with the terms of the contract, up to the date of this certificate, are not less than the total payments received or claimed by the Contractor under the contract (including the payment claimed under this invoice), and that the Contractor has fully complied with the terms and conditions of the contract, including the plans and specifications."

c. AID Form 1440-3, Contractor's Certificate and Agreement with the Agency for International Development, Contractor's Invoice and Contract Abstract, executed in accordance with the instructions thereon.

/The number of copies required of the above documentation will be determined later. /The/AID Loan Number 497-H-024 shall appear on all documents.

GC.32.2 Rupiah Payments. Requests for payments under the rupiah portion of the Contract shall include the following documentation:

/a/ * The Contractor's invoice. for Administrative expenses. The invoice shall show the value of the rupiah portion of the election work completed up to the end of the preceding month and shall show the percentage completion of the rupiah portion of the work/

* b. The following certification, signed and dated by the Contractor:

> I (we) hereby certify that the equipment and materials invoiced herein or covered by the attached invoice were mined, grown, or produced in _____ (eligible source country) and that any produced equipment and materials were manufactured, processed, or assembled into equipment and materials substantially different in basic characteristics or in purpose or utility from any imported components.
>
> I (we) further certify that to the best of my (our) information and belief none of such equipment and materials contain components imported from other than free world (A.I.D. Geographic Code 935) countries.

The number of copies required of the above documentation will be determined later. The AID Loan Number 497-H-024 shall appear on all documents.

* Deleted for Contract

* GC.32.3 Local Currency Needs. It is a requirement of AID that all local rupiah costs of the contract be paid in Indonesian Rupiahs. Dollar payments will not be made from the AID loan for that portion of the contract except as provided for under the AID Capital Projects Guidelines M.O. 1442.2 and M.O. 1442.3.

Whenever it is necessary for the Contractor, or personnel employed by him, to convert USA Dollars to Indonesian Rupiahs arrangements for such conversion shall be made through the US Disbursing Officer or the AID Jakarta Mission Controller as appropriate or as otherwise directed by the US Disbursing officer.

** Conversion of rupiahs to dollars shall be at the rate of 415 Indonesian Rupiahs per USA Dollar, adjusted upward or downward when the official rate of Indonesian exchange varies upward or downward by more than 5 per cent from this rate.

Payments for any Indonesian tax or contribution will not be made from the AID loan.

GC.32.4 Equipment and Materials Payment Schedule. Payment for the equipment and materials portion of this Contract will be made in accordance with the following schedule:

75% pro rata per shipment due fob ocean vessel. If shipment cannot be made due to force majeure conditions, payment will be made against Contractor's invoice and warehouse receipt.

*** 15% pro rata per shipment due upon receipt of shipment at the Owner's plant site, but in no event later than six months after shipment from the factory or storage of the equipment

10% as provided hereinafter under Final Payment

100% of expenses incidental to export of the equipment including insurance, freight, and storage charges will be paid against Contractor's invoice and evidence of export or storage.

**** GC.32.5 Erection Payment Schedule. The Contractor shall prepare and submit requests for payment for the erection portion of the contract each month to the Engineer. Upon approval of the request for payment by the Engineer, the Owner will pay 90 per cent of the rupiah value of the erection work performed during the preceding month not later than 60 days after receipt of the approved invoice. Upon approval of the request for payment by the Engineer, the Owner will review the request and if acceptable will approve payment of 90 per cent of the dollar value of the erection work performed during the preceding month. The invoice for the dollar portion of the work will be returned to the Contractor with the Engineer's and Owner's approval for presentation by the Contractor to the bank holding the Letter of Credit. The remaining 10 per cent of the contract price for erection will be paid as stipulated hereinafter under Final Payment.

* Refer to Item 4 of Addendum 3
(PLN - 6104)
(EQUIPMENT & ERECTION)
070273

*** Refer to Item 7 of Addendum 1

** Deleted in accordance with Item 5 of Addendum 1

**** Erection Payment Schedule deleted for contract. Substitute revised GC.32.5 Administrative Expenses shown on page GC-23A.

* GC.32.5 <u>Administrative Expenses</u>. One hundred percent (100%) of administrative expenses shall be paid immediately upon signing of the contract.

* Added for Contract

(PLN - 6104)
(EQUIPMENT & ERECTION)
051674

Separate requests for payment shall be submitted for the dollar and rupiah portions of the erection work. Payment in dollars will be made against the Letter of Credit. Payment in rupiahs will be made in Indonesia by the Owner.

GC.32.6 Final Payment. Upon official approval and acceptance of the work by the Owner, the Contractor shall prepare and submit to the Engineer, final
* invoices covering the equipment and materials portion of this contract ~~and the dollar and rupiah portions of the erection portion of this contract.~~

The invoices shall include the 10 per cent retainage of the contract prices
* for equipment and materials ~~and erection.~~ Subject to the Engineer's approval and certification, such final invoices will be submitted to the Owner within 60 days of the Engineer's receipt thereof; and the Owner will within 60 days after said final invoices are certified pay the rupiah amount so certified and forward the final invoices for the dollar portion with all required documentation to the bank holding the Letter of Credit for payment to the Contractor.

Official acceptance will not be made until all work specified in the contract documents has been completed, all required inspections have been made, an acceptable performance test has been completed, and the unit has attained commercial operation; however, at the option of the Owner, official acceptance may be made upon the satisfactory completion of an acceptance test performed after initial operation.

Final payment will not be made until official acceptance is made by the Owner and all required certifications have been received, and a release of all claims against the Owner has been submitted.

In the event the Owner does not give official approval and acceptance of the work within 36 months after the date the shipment of equipment and materials from the factory was complete because of any cause which is beyond the Contractor's control, the final payment will be made in the manner as stipulated above providing the installed equipment and materials are in accordance with the specifications as far as can be determined.

** GC.32.7 Indonesian Agent's Commission. The total amount of the Indonesian Agent's commission (if any) will be paid locally in Indonesian Rupiahs except as may be allowed to be AID financed as described in AID Capital Guidelines H.O. 1442.3, Section 5.9.

Fifty per cent will be paid on completion of delivery of the equipment and materials and 50 per cent upon the Owner's official acceptance of the work.

* Deleted for Contract

** Deleted in accordance with Item 5 of Addendum 3

GC.32.8 Withholding Payment. The Owner may withhold or nullify the whole or a part of any payment to the extent as may be necessary to protect himself against:

a. Defective workmanship or materials

b. Claims filed, or reasonable evidence indicating probable filing of claims.

c. Any other violation of, or failure to comply with, the provisions of this Contract.

When the above grounds are removed, payment will be made for amounts withheld because of them.

GC.33 BEGINNING, PROGRESS, AND TIME OF COMPLETION OF WORK. Unless otherwise specified the Contractor shall begin work under this Contract within 10 days after receipt of a Letter of Intent from the Owner to be followed by the establishment of an irrevocable Letter of Credit in a mutually acceptable USA bank for the USA Dollar value of this Contract. The rate of progress shall be such that the work will be completed in accordance with the schedule named in the Contract Agreement. The Contractor shall furnish the Engineer a detailed schedule setting forth the procedure he proposes to follow and giving the dates he expects to start and to complete separate portions of the work. If in the opinion of the Engineer proper progress is not being maintained, changes shall be made in the Contractor's operations to assure proper progress.

GC.34 LIQUIDATED DAMAGES. The term "Unit" used hereinafter and in the Contract Agreement shall be understood to mean either Unit 1 or 2 including the specified accessories of either unit of the Semarang Steam Power Plant as applicable; it shall not be construed to mean the individual items of equipment which are furnished under this Contract.

Liquidated damages as specified herein and in the Contract Agreement shall apply to each unit individually, not collectively to both units. The term contract price used in the limitation of the maximum amount of liquidated damages shall be understood to mean the contract price of the designated unit, not the aggregate contract price for both Units 1 and 2.

It is understood and agreed that time is of the essence of the contract.
* Should the Contractor fail to complete the specified ~~field construction~~ delivery ~~and erection~~ within the time period or periods stipulated in the Contract Agreement after due allowance for any extensions of time which may be granted under the provisions of these contract documents, the Contractor shall pay to the Owner, as stipulated liquidated damages and not as a penalty, the amount of liquidated damages stated in the Contract Agreement for each day of default. The total amount of liquidated damages assessed for failure to comply with the specified delivery schedule shall not exceed 10 per cent of the contract price for the equipment and materials excluding ocean freight, insurance, and port surcharge.

* Revised for Contract - Refer to Page CA.2 of Contract Award
(PLN - 6104)
(EQUIPMENT & ERECTION)
070273

The Owner shall have the right to deduct the liquidated damages from any moneys in its hands or otherwise due, or to become due, to the Contractor. or to sue for and recover compensation for such liquidated damages.

GC.35 AID PROCUREMENT SOURCE AND ORIGIN REQUIREMENTS. The Contractor shall comply with the following AID requirements.

GC.35.1 Geographic Source Provisions. All equipment, materials, and other commodities furnished under this Contract shall have their source and origin from countries designated as eligible in AID Geographic Code 941.

"Origin" shall mean the country in which such equipment or material was mined, grown, or produced through manufacturing, processing, or assembly. "Source" shall mean the country or territory from which such equipment or material is shipped to Indonesia; except that when the equipment or materials are shipped to Indonesia from a free port or bonded warehouse in the form in which received therein, "source" shall mean the country or territory from which the equipment or material was shipped to such free port or bonded warehouse.

A produced commodity shall be deemed of country origin if as a result of manufacturing, processing, or assembly in such country, a commercially recognized new commodity is produced that is substantially different in basic characteristics or in purpose or utility from any of its imported components.

Equipment and materials which are normally imported into Indonesia and stocked therein in the form in which imported to meet a general demand in Indonesia for the item, shall be deemed as being of Indonesian source and origin.

No produced commodity shall be eligible for AID financing if it contains components from a Communist Bloc country. (A country not specified in AID Geographic Code 935).

No produced commodity shall be eligible for AID financing if such commodity contains any components which were imported into the producing country and such components were acquired by the producer in the form in which they were imported; and the total cost of such components (delivered at the point of production) amounts to more than 50 per cent of the lowest price (excluding the cost of ocean transportation and marine insurance) at which the supplier makes the commodity available for export sale, whether or not financed by AID. Indonesian source goods and services are ineligible for AID financing with the exception of insurance and certain commissions as set forth in the AID Guidelines.

* Refer to Item 6 of Addendum 2 and Item 4 of Addendum 4

No produced commodity shall be eligible for AID financing if such commodity has been transported to Indonesia by: a transportation medium owned, operated, or under the control of any Communist Bloc country; a vessel which AID, by written notice to the Owner, has designated as ineligible; or under any ocean or air charter which has not received prior approval by AID.

GC.36 BOOKS AND RECORDS. The Contractor shall maintain adequate books and records covering all transactions under or in connection with this Contract. The books and records shall be maintained for a period of not less than 3 years after the date of final payment under this Contract. The books and records shall be available for inspection and audit by the Owner and/or AID to insure compliance with the requirements of this Contract. If the Contract is for a fixed price, an audit as to cost will not be performed except for cost reimbursable items; however, they will be subject to audit for compliance with source and origin, transportation, and comparable requirements.

GC.37 LEGAL EFFECT OF CERTAIN AID APPROVALS AND DECISIONS. The parties hereto understand that AID has reserved certain approval rights including but not limited to, the right to approve the terms of this Contract, the Contractor, and any or all plans, reports, specifications, subcontracts, bid documents, drawings, or other documents related to this Contract and the project of which it is part. The parties hereto further understand and agree that AID, in reserving any or all of the foregoing approval rights, has acted solely as a lender to assure the proper use of United States Government funds, and that any decision by AID to exercise or refrain from exercising these approval rights shall be made as a lender in the course of financing the project and shall not be construed as making AID a party to the contract. The parties hereto understand and agree that AID may, from time to time, exercise the foregoing approval rights, or discuss matters related to these rights and the project of which this Contract is part, with the parties jointly or separately, without thereby incurring any responsibility or liability to the parties jointly or to any of them.

Any approval or failure to disapprove by AID of any plan, report, specification, contract, bid document, drawing or other documents shall not bar the Owner or AID from asserting any right or relieve Contractor of any liability which Contractor might otherwise have to borrow or AID, because of such plan, specification, contract, bid document, drawing or other document, or any performance or failure of performance thereunder, or under any AID Contractor's or supplier's certificate.

GC.38 INELIGIBLE FIRMS. No equipment, material, or service shall be furnished under this Contract by any firm on the list of suspended, debarred, or ineligible firms maintained by AID. No USA firm or any other firm which is more than 50 per cent beneficially owned by a USA firm shall furnish equipment, materials, or services under this Contract if the USA firm is not in compliance with its equal employment opportunity obligations under Executive Order 11246, as amended and orders issued thereunder.

GC.39 COMMUNIST BLOC MATERIALS. No equipment, materials, or services, except ocean freight in connection with equipment and materials which are not US AID financed, shall be furnished under this Contract if the source and origin thereof is a Communist Bloc country. A Communist Bloc country is defined as a country excluded from the Free World as specified in AID Geographic Code 935.

GC.40 SHIPPING. Not less than 50 per cent of the gross tonnage of equipment and materials furnished under this Contract shall be transported by privately owned USA flag commercial vessels to the extent that such vessels are available at fair and reasonable rates for USA flag vessels. The Contractor shall furnish documentation regarding the nationality of the vessels used to transport the equipment and materials.

The costs of ocean transportation and related delivery services will not be eligible for AID financing if the shipment is made:

a. On a carrier under the flag of a country not included in AID Geographic Code 941, unless shipment on such carrier has been approved by US AID prior to shipment.

b. On a carrier under the flag of the Republic of Indonesia

c. On any carrier designated by written notice to the Owner as ineligible by AID

d. Under any charter covering full or part cargo which has not received prior approval by AID.

e. On any carrier owned, operated, or under the control of any Communist Bloc country.

GC.41 DIVERSION RIGHTS. AID reserves certain diversion and vesting rights to the extent and as provided under the Loan Agreement, Letters of Implementation, and other related documents. These rights may be exercised at the option of AID in the event of default by the Owner of agreements with AID which are not remedied, if an extraordinary situation shall arise which makes it improbable that the purposes of the loan will be

attained or that the Owner will be able or willing to perform its obligations under AID agreements, or if disbursement by AID would be unlawful. The diversion and vesting rights include, among others, the provision that AID may direct the transfer of title to AID of goods financed by AID, provided the goods are from a source outside Indonesia, are in deliverable condition, and have not been offloaded in Indonesia. In the event of exercise of these rights, the Contractor shall abide by the instructions of AID relative thereto.

* GC.42 MAJOR ECONOMIC DISLOCATION. In the event of there being, subsequent to the date of the Proposal, such a major economic dislocation within Indonesia as to result in the imposition by the Government of Indonesia of currency restrictions, or in the devaluation of the currency of Indonesia to a degree exceeding normal business risk, the Owner shall pay to the Contractor any increased costs of, or incidental to, the execution of the work. These costs are construed to be attributable to, or consequent on, or the result of, or in any way whatever connected with such economic dislocation, provided always that nothing contained in this clause shall prejudice the right of the Contractor to exercise any other rights or remedies to which he may be entitled in such event.

** GC.43 GOVERNMENTAL AUTHORIZATIONS. The Owner shall be responsible for obtaining any required authorizations for re-exporting tools, equipment, test equipment, unused materials, and the like, all of which are and remain the property of the Contractor, from Indonesia at the conclusion of the work. The Contractor will be required to re-export all of his construction equipment from Indonesia at the conclusion of the work. Any such material which is to be retained or sold in Indonesia shall be disposed of in accordance with the regulations of the Government of Indonesia.

The Contractor, pursuant to its agreement to arrange for the USA export shipment on behalf of the Owner, will apply for any required export license. Whoever is the proper party under the applicable regulations shall make prompt application for any preference rating or other USA governmental authorizations which may be required to permit the manufacture of the equipment. The parties shall assist each other in every manner reasonably possible in securing such authorizations as may be required.

*** GC.44 CUSTOMS CLEARANCE. The ~~Contractor or his authorized agents~~ Owner will be responsible for Indonesian customs clearance of all materials, supplies, equipment, tools and other articles shipped into Indonesia by the Contractor for the accomplishment of this work. Customs clearance will take place at the Port of Semarang, at the international airport at Jakarta, **** or other appropriate port. The Owner will pay the customs duties, taxes, and license fees necessary for such clearance.

* Deleted in accordance with Item 8 of Addendum 1
** Refer to Item 9 of Addendum 1
*** Revised for Contract
**** Refer to Item 7 of Addendum 2

It is contemplated that large amounts of equipment, materials, supplies, tools, etc. will be loaded overside ship directly onto barges. The
* Contractor shall furnish to the Owner and Engineer, ~~WILL IN ADVANCE, DETAILED PACKING LISTS FOR EACH~~ necessary documentation so that prior arrangements can be made with customs officials for expeditious off loading from ocean going vessels into barges. Where necessary the Contractor shall arrange for unloading under customs bond to barges in order to facilitate ocean vessel unloading.

**

*** After customs clearance by the Owner ~~CONTRACTOR~~ and release of the goods by customs officials, the Owner ~~CONTRACTOR~~ shall be responsible for transport from Semarang Harbor by barge, rail or truck to the site.

Tools and equipment for use during construction but which are to remain the property of the Contractor and which are to be re-exported by the Contractor from Indonesia at the conclusion of the work shall be carefully documented and specially listed to facilitate both import and export. The Contractor shall determine prior to shipment the customs regulations applicable to this special case as well as normal import rules and regulations applicable.

GC.45 IMPORTED PERSONNEL. The Contractor shall submit to the Owner data on all personnel he intends to bring into Indonesia for the performance of the work. These data shall include the name and present address of each person, his intended assignment and responsibility in connection with the work, and a concise resume of his experience in the type of work to which he will be assigned. These data shall be submitted not later than 60 days prior to their expected arrival in Indonesia.

The Owner will review the information submitted and advise the Contractor of the suitability of the personnel listed. Any personnel found to be unsatisfactory to the Owner shall be replaced with personnel satisfactory to the Owner. The Owner's approval must be secured prior to withdrawal of any non-Indonesian personnel assigned to the work. Requests for withdrawal shall include the reasons for withdrawal, the duration of the withdrawal, or alternatively, data on the replacement personnel to be imported by the Contractor. If at any time after arrival of non-Indonesian personnel, the Owner shall notify the Contractor that any of them are in the Owner's opinion unsatisfactory, such persons shall be withdrawn and replacements satisfactory to the Owner shall be provided at the Contractor's expense.

Any expenses associated with illness of the Contractor's personnel, including replacement thereof, shall be at the Contractor's expense.

* Deleted in accordance with Item 10 of Addendum 1
** Refer to Item 10 of Addendum 1
*** Revised for Contract

Costs of passports, visas, travel documents, inoculations and other incidental expenses incurred by the Contractor's non-Indonesian employees and their dependents occasioned by travel to and from Indonesia shall be borne by the Contractor.

The Owner will not furnish living quarters for the Contractor's personnel and families. The Contractor's employees may import for their personal use a reasonable quantity of household goods and personal effects. These goods will be exempt from import duties and taxes provided those not consumed are re-exported. The Owner will be the sole judge as to what constitutes a reasonable quantity, based upon the rules and regulations of the Government of Indonesia. The non-Indonesian employees may import one automobile per family for their personal use exempt from import duties and taxes provided it is re-exported.

The expatriate personnel of the Contractor shall respect all Indonesian laws, rules, and regulations and shall not interfere with Indonesian political or religious affairs either directly or indirectly and shall comply with such other rules and regulations as the Contractor, Owner or Engineer may establish from time to time with respect to the expatriate personnel employed by the Contractor. The expatriate personnel of the Contractor shall work and live in harmony with their co-workers (both expatriate and Indonesian) employed on the work and at all times conduct themselves in an orderly manner. The expatriate personnel shall not engage, directly or indirectly, in any other employment, service, or business whatever, including dealings in real estate, nor shall they take part in local politics.

All expatriate personnel of the Contractor under this Contract shall be citizens or residents of a non-Indonesian Code 941 country, ~~except that, not more than 20 per cent of all such personnel may be "third country nationals" as defined in the AID/Capital Projects Guidelines.~~ * All expatriate personnel shall remain employees of the Contractor, and shall receive their salaries and allowances directly from the Contractor. With regard to citizens or residents of the USA, the Contractor agrees not to discriminate against any employee or applicant for employment by reason of race, creed, sex, color or national origin in carrying out this Contract.

GC.46 REPORTING, SHIPPING, AND CLEARING DOCUMENTS. The Contractor shall provide all official forms and documentary information as shall be needed to satisfy the AID Loan ~~and Indonesian customs clearance requirements.~~ *

GC.47 AID APPROVAL. This Contract and any amendment, modification, or assignment thereof shall not be effective unless and until approved by AID. Modifications not approved by AID will not be financed by AID.

* Revised for Contract

GC.48 TERMINATION. Unless otherwise terminated under the provisions of the articles entitled RIGHT OF OWNER TO TERMINATE CONTRACT and TERMINATION FOR THE CONVENIENCE OF THE OWNER, this Contract shall be deemed terminated at the expiration of the guarantee period as provided for under the article entitled GUARANTEE.

GC.49 RELEASE OF INFORMATION. The Contractor shall not communicate or use in advertising, publicity, or sales releases, photographs or other reproductions of the work under this Contract, or descriptions of the size, dimensions, quantity, quality, or other information concerning the work unless prior written permission has been obtained from the Owner.

GC.50 AID GEOGRAPHIC CODES.

GC.50.1 AID Geographic Code 941 - Selected Free World. The United States (001 and 002), and any other independent country in the Free World*, excluding the cooperating country itself and the following:

Europe		Other	
Andorra	Malta	Algeria	Kuwait
Austria	Monaco	Australia	New Zealand
Belgium	Netherlands	Canada	Somali Republic
Denmark	Norway	Cyprus	S. Africa, Rep. of
Finland	Portugal	Greece	Southern Rhodesia
France	San Marino	Hong Kong	Sudan
Germany, Fed. Rep.	Spain	Iraq	Syria
Berlin, West	Sweden	Israel	United Arab Rep. (Egypt)
Iceland	Switzerland	Japan	Yemen
Ireland	United Kingdom	* Lybia	* United Arab Emirates
Italy	Vatican City	* Qatan	
Liechtenstein	Yugoslavia		
Luxembourg			

* "Free World" excludes any area or country listed in Code 935.

GC.50.2 AID Geographic Code 935 Special Free World. Any area or country in the Free World, including the cooperating country itself.

Countries excluded from the Free World are as follows:

Cuba
China (Mainland) and Other Chinese Communist-Controlled Areas, including:

Manchuria
Inner Mongolia
Tsinghai Province
Sikang Province
Sinkiang
Tibet

* Added for Contract

The former Kwantung Leased Territory
The present Port Arthur Naval Base area
Liaoning Province
Eastern Europe
Albania
Bulgaria
Czechoslovakia
East Germany (Soviet Zone of Germany and Soviet Sector of Berlin)
Estonia
Hungary
Latvia
Lithuania
Romania
Korea, North
Outer Mongolia
Poland
Union of Soviet Socialist Republics (USSR)
Viet-Nam (North)

PART 1 - GENERAL REQUIREMENTS

TABLE OF CONTENTS

		Page
Section 1A - GENERAL DESCRIPTION AND SCOPE OF THE WORK		1A-1 through 1A-4
1A.1	General	1A-1
1A.2	Work Included Under These Specifications	1A-1
1A.3	Performance Guarantees	1A-1
1A.4	Miscellaneous Materials and Services	1A-2
1A.5	Work Not Included Under These Specifications	1A-2
1A.6	Schedule	1A-2
1A.7	Contractor's Services	1A-3
1A.8	Training Program	1A-4
Section 1B - GENERAL EQUIPMENT SPECIFICATIONS		1B-1 through 1B-16
1B.1	General	1B-1
1B.2	Referenced Specifications and Standards	1B-1
1B.3	Quality Assurance	1B-1
1B.4	Factory Assembly	1B-1
1B.5	Packaging	1B-2
1B.6	Protection	1B-2
1B.7	AID Emblem	1B-3
1B.8	Weatherproofing	1B-3
1B.9	Source of Materials and Repair Parts	1B-3
1B.10	Design Coordination	1B-3
1B.11	Correction of Manufacturing Errors	1B-3
1B.12	Equivalent Materials and Equipment	1B-3
1B.13	Tools	1B-4
1B.14	Compressed Air	1B-4
1B.15	Control Power	1B-4
1B.16	Auxiliary Power	1B-5
1B.17	Welding	1B-5
1B.18	Shop Coating	1B-5
1B.19	Alignment and Balance	1B-6
1B.20	Lubrication	1B-6
1B.21	Drive Units	1B-6
1B.22	Shaft Couplings	1B-7
1B.23	Safety Guards	1B-7
1B.24	Equipment Bases	1B-7
1B.25	Instrumentation	1B-7
1B.26	Electrical Accessory Devices	1B-10
1B.27	Nameplates	1B-11
1B.28	Factory Prewired Electronics Systems Cabinets	1B-12
1B.29	AC Motor Starters	1B-12
1B.30	Raceway	1B-12
1B.31	Wiring	1B-13

	Page
1B.32 Cable Termination Provisions	1B-14
Motor Control Center Specification and Data Sheet	1B-15
Shipping Container Identification	1B-16
Section 1C - ENGINEERING DATA	1C-1 through 1C-9
1C.1 General	1C-1
1C.2 Correspondence	1C-1
1C.3 Performance Curves	1C-1
1C.4 Design Data	1C-2
1C.5 Motor Information	1C-5
1C.6 Drawings	1C-5
1C.7 Instruction Manuals	1C-8
Typical Equipment Instruction Book Cover	A6104-030273
Section 1D - ELECTRIC MOTORS	1D-1 through 1D4-3
1D.1 General	1D-1
Subsection 1D1 - Integral Horsepower AC Motors, 600 Volts and Below	
1D1.1 General	1D1-1
1D1.2 Codes and Standards	1D1-1
1D1.3 Rating	1D1-1
1D1.4 Nameplate Data	1D1-1
1D1.5 Terminal Markings	1D1-1
1D1.6 Design and Construction	1D1-1
1D1.7 Factory Tests and Inspection	1D1-6
1D1.8 Motor Information Sheets	1D1-7
1D1.9 Manufacturers	1D1-7
Motor Information Sheet	1D1-8
Subsection 1D2 - Fractional Horsepower AC Motors	
1D2.1 General	1D2-1
1D2.2 Codes and Standards	1D2-1
1D2.3 Rating	1D2-1
1D2.4 Design and Construction	1D2-1
1D2.5 Tests	1D2-2
1D2.6 Manufacturer	1D2-2
Subsection 1D3 - Valve Motor Operators	
1D3.1 General	1D3-1
1D3.2 Codes and Standards	1D3-1
1D3.3 Rating, Design, and Construction	1D3-1
4 Train Geared Limit Switch Contact Development	1D3-3
Subsection 1D4 - Direct Current Motors	
1D4.1 General	1D4-1
1D4.2 Nameplate Standard	1D4-1

		Page
1D4.3	Rating	1D4-1
1D4.4	Service Factor	1D4-1
1D4.5	Insulation	1D4-1
1D4.6	Bearings	1D4-2
1D4.7	Rotors	1D4-2
1D4.8	Shafts	1D4-2
1D4.9	Enclosures	1D4-2
1D4.10	Torque Characteristics	1D4-2
1D4.11	Factory Tests	1D4-3
1D4.12	Manufacturers	1D4-3

Secton 1A - GENERAL DESCRIPTION AND SCOPE OF THE WORK

1A.1 GENERAL. This section covers the general description, scope of work, and supplementary requirements for equipment, materials, and services included under these specifications.

The equipment furnished under these specifications will be incorporated into a new steam power plant to be constructed on a site near the harbor at Semarang, Indonesia. The plant will have two oil fired steam electric generating units of approximately 50 megawatts capacity each.

* 1A.2 WORK INCLUDED UNDER THESE SPECIFICATIONS. The work under these specifications shall include furnishing, ~~delivering to the Semarang Steam~~
** ~~Power Plant site, erecting and placing into successful operation the~~
Units 1 and 2 turbine generators and lube oil conditioners, and hydrogen generation equipment common to both Units 1 and 2, all complete as speci-
** fied in Parts 2 ~~and 3~~ of these specifications, and providing services and miscellaneous materials complete as specified herein and in accordance with the contract documents defined in Article GC.1 of the GENERAL CONDITIONS.

** The Contractor shall provide engineering data, ~~manufacturer's field services~~, tools, instruction manuals, and miscellaneous materials and services, and shall participate in design conferences, all as specified herein.

** The on-site erection work shall be in accordance with the requirements specified in Part 3 of these specifications. The Contractor shall furnish all construction plant, labor, supervision, tools, equipment, and supplies required to perform the erection work from unloading to placing the equipment in operation.

1A.3 PERFORMANCE GUARANTEES. The equipment furnished under these specifications will be tested by the Owner after installation to demonstrate its ability to operate satisfactorily under the conditions specified and to fulfill the warranties and guarantees set forth herein.

Specific performance guarantees are specified in the detailed specifications. Should the tests indicate that the equipment fails to meet guaranteed performance, the Contractor shall take immediate steps to correct the deficiencies in accordance with the requirements specified under GUARANTEE in the GENERAL CONDITIONS. Failure to meet guaranteed performance will result in the imposition of ~~penalties~~ liquidated damages as specified in Section 2A.

* Refer to Article 1A.9

** Deleted for Contract

* 1A.4 MISCELLANEOUS MATERIALS AND SERVICES. Miscellaneous materials and services not otherwise specifically called for shall be furnished by the Contractor in accordance with the following:

Turbine generator foundation bolts and bolt sleeves

All nuts, bolts, and gaskets between components and equipment furnished under these specifications

One year's supply of all lubricants and greases including turbine oil for flushing and operation. Specifications shall be provided for all lubricants required.

All piping integral to an item of equipment furnished under these specifications, except as otherwise specified herein

All necessary connections for the Owner's piping and instruments

All necessary instrument and power and control wiring and raceways integral to any equipment furnished under these specifications. This shall include terminal blocks and internal wiring to these terminal blocks for equipment requiring external connection.

Coupling guards for all exposed shafts and couplings

** ~~Erection materials and services specified in Section 8A of these specifications~~

* 1A.5 WORK NOT INCLUDED UNDER THESE SPECIFICATIONS. The following items of work will be furnished by the Owner:

** ~~Construction services and materials specified as Owner-Furnished in Section 8A of these specifications~~

*** Foundations ~~and sleeves~~
*** Sleeves for piping and wiring
Permanent electric wiring to connect equipment terminal boxes to the plant electrical system

Finish painting of all equipment except as specified herein

Operating personnel for startup and tests

* 1A.6 SCHEDULE. ~~All equipment shall be delivered on a schedule which will permit erection to begin on May 1, 1975. The erection work under these specifications shall be performed on a schedule to permit operation~~

* Refer to Article 1A.9
** Deleted from Contract
*** Revised in accordance with Item 13 of Addendum 1

* ~~of the turbine generator and the entire generating unit by the following dates:~~

		Initial Operation	Continuous Commercial Operation
**	Unit 1	1 January, 1977 ~~April 15, 1976~~	1 March, 1977 ~~October 1, 1976~~
**	Unit 2	~~July 15, 1976~~ 1 April, 1977	~~January 1, 1977~~ 1 June, 1977

** The turbine generator foundation bolts and bolt sleeves shall be shipped to arrive at the jobsite during ~~December 1974~~ April, 1975.

Within 60 days after the contract award, the Contractor shall submit to the Engineer a production and shipping schedule for all major equipment and components. This schedule shall be updated and resubmitted quarterly until all equipment and materials have been shipped.

*** It is anticipated that erection of the turbine generator can be started by June 1, 1975. Within 10 months after the date of contract award, the Contractor shall submit a critical path method diagram of the erection of each turbine generator to the Engineer for review and concurrence. This diagram shall include the following:

All major equipment and components

Sequence of erection for all equipment and components

Estimated duration in working days for all activities

Requirements for the interfaces of work being performed under separate specifications

This information shown on this diagram will be incorporated into the overall project schedule which will be prepared by the Engineer, and used for project management during the construction period.

1A.7 CONTRACTOR'S SERVICES. The services called for in WORK INCLUDED UNDER THESE SPECIFICATIONS shall be in accordance with the following.

1A.7.1 Engineering Data. Drawings and other engineering data for the specified equipment and materials are essential to the design and subsequent construction of the entire generating unit. Time is of the essence in completing each phase of the work so that Units 1 and 2 can be in commercial operation on the scheduled dates.

* Refer to Article 1A.9
** Revised for Contract
*** Deleted from Contract

The Contractor will be required to submit drawings and other engineering data in accordance with the schedule and requirements specified in Section 1C - ENGINEERING DATA, to assure compliance with the overall construction and operating schedule.

* 1A.7.2 Manufacturer's Field Services. The Contractor shall furnish the services of one or more manufacturer's erection supervisors for resident supervision of all erection work, testing, and placing the turbine generators into successful operation. The erection supervisors shall be present during and shall supervise the unloading of equipment and materials, hauling, storing, cleaning, erection, startup, and testing of the turbine generators.

** The Contractor shall also furnish the field services of direct representatives of the manufacturers of auxiliary equipment which has rotating parts, or which may require field inspection and adjustment to assure proper operation. They shall inspect the equipment after its installation and make any needed changes or adjustments to assure proper operation. They shall furnish written certification to the Owner that the equipment has been inspected and adjusted by them or under their supervision and that it is ready for service, all of which shall be done before initial operation of the equipment.

The Contractor shall furnish technical field supervision for a period of 90 days after commercial operation of each unit. The technical supervisor during this period shall assist in the training and instruction of the Owner's personnel in the proper operation and maintenance of the turbine generating units.

1A.7.3 Design Conference. The Contractor's design engineer shall attend design conferences as required at a time and place mutually agreed upon to discuss matters relative to the execution of this Contract. Additional design conferences shall be held as required thereafter to expedite the work.

1A.7.4 Instruction Manuals. Instruction manuals shall be furnished in accordance with the requirements stated in Section 1C of these specifications.

1A.8 TRAINING PROGRAM. The Engineer will conduct a training program in the United States for training Owner's supervisory operating personnel for the S marang Steam Power Plant. If requested by the Engineer, the Contractor, and his manufacturers, shall make their manufacturing facilities available for inspection trips by the Owner's trainees and shall assist in discussing the equipment and its design, operation, and maintenance.

* Deleted from Contract-Refer to Basis of Contract Award
** Refer to Item 8 of Addendum 3

1A.9 SUPPLEMENT TO SECTION 1A. These specifications were prepared on the basis that erection of the equipment and materials supplied would be included under this Contract. As this Contract does not include erection of the equipment and materials, it is necessary that the following additions be made to this Section 1A and become a part of these specifications:

1. Article 1A.2. Add the following paragraph.

   Equipment, materials, and accessories furnished shall be delivered to the Port of Semarang, Indonesia and unloaded from transport under these specifications. They will be received, transported to the plant site, unloaded, stored and erected under separate specifications. Unloading from cars and storing at the site will not constitute acceptance.

2. Article 1A.4. Add the following items to the listing.

   Leveling blocks, subsoleplates, soleplates, thrust blocks, matching blocks and shims

   Erection drawings, prints, information, instructions, and other data for use by the erection contractor

* The use of all special tools required for erection of the equipment that are not included with the maintenance tools, including shipping costs to and from the job site.

3. Article 1A.5. Add the following items to the listing.

   Grouting materials and placing thereof

4. Article 1A.6. Revise the first paragraph to read:

   The Contractor shall schedule production and shipment of the equipment and materials to assure delivery at the end of ships' tackle at the Port of Semarang, Indonesia not later than the following dates:

Unit 1	1 April, 1976
Unit 2	1 June, 1976

   Initial and commercial operation of the units is scheduled by the following dates:

* Deleted for Contract

Section 1B - GENERAL EQUIPMENT SPECIFICATIONS

1B.1 GENERAL. These General Equipment Specifications apply in general to all equipment and materials. Certain requirements specified herein will obviously not apply to the particular equipment and materials furnished under these specifications; however, where applicable to a particular item of equipment or material, these requirements shall apply.

These General Equipment Specifications are supplementary to the detailed specifications; if requirements in conflict with the requirements specified herein are specified in the detailed specifications, the detailed specifications shall govern to the extent of such conflict.

1B.2 REFERENCED SPECIFICATIONS AND STANDARDS. The specifications, codes, and standards referenced in these specifications (including addenda, amendments, and errata) shall govern in all cases where references thereto are made. In case of conflict between the referenced specifications, codes, or standards and these specifications, the latter shall govern to the extent of such difference.

The specification, code or standard applied in each case shall be the latest revision adopted and published at the date of taking bids. Any conflict between standards shall be referred to the Engineer who will determine which standard shall govern.

1B.3 QUALITY ASSURANCE. The Contractor shall maintain a quality program that provides that equipment, materials, and services under these specifications whether manufactured or performed within the Contractor's plant or at any other source shall be controlled at all points necessary to assure conformance to contractual requirements. The program shall provide for the prevention and ready detection of discrepancies and for timely and positive corrective action. The Contractor shall make objective evidence of quality conformance readily available to the Owner and the Engineer. Instructions and records for quality assurance shall be controlled.

1B.4 FACTORY ASSEMBLY. Equipment shall be shipped completely factory assembled, except when the physical size, arrangement or configuration of the equipment, or shipping and handling limitations make the shipment of completely assembled equipment impracticable, in which case the equipment shall be assembled and shipped as stated in the Contractor's proposal.

When proposals are submitted without statements describing sectional shipments, it will be understood that no field assembly of the equipment will be required and the Contractor shall be responsible for all cost encountered in the field for assembly of sections, accessories or appurtenances not listed in the Proposal as requiring field assembly.

1B.5 PACKAGING. All equipment and materials shall be suitably coated, wrapped, or covered and boxed or crated for export shipment and to prevent damage or deterioration during handling and storage at the site.

All accessory items shall be shipped with the equipment. Boxes and crates containing accessory items shall be marked so that they are identified with the main equipment. The contents of each box and crate shall be indicated by markings on the exterior.

An itemized list of contents shall be attached to the outside of each box or crate in a weather-resistant envelope. An identical list shall be included inside each box or crate. The lists shall be plainly marked and placed in an accessible location to facilitate receipt and inspection.

Each package or shipping unit shall be clearly marked as indicated on the sheet entitled "SHIPPING CONTAINER IDENTIFICATION" included at the end of this section.

Packaging or shipping units shall be designed within the limitations of the unloading facilities of the receiving ports and the ship which will be used for transport. Ships with special heavy capacity unloading rigging may be required for large units of equipment. It shall be the Contractor's responsibility to investigate these limitations and to provide suitable packaging and shipping to permit unloading at Jakarta or the Port of Semarang. "On deck" shipment will not be permitted unless prior approval has been obtained from the Engineer.

Electrical equipment, controls and insulations shall be protected against moisture and water damage. All external gasket surfaces and flange faces, couplings, motor pump shafts, bearings and like items shall be thoroughly cleaned, and coated with rust preventive compound as specified above, and protected with suitable wood, metal or other substantial type covering to insure their full protection.

1B.6 PROTECTION. Coated surfaces shall be protected against impact, abrasion, discoloration, and other damage. Surfaces which are damaged shall be repaired.

All exposed threaded parts shall be greased and protected with metallic or other substantial type protectors. All female threaded openings shall be closed with forged steel plugs. All piping, tubing, and conduit equipment connections shall be sealed with metallic or other rough usage covers and taped to seal the interior of the equipment piping, tubing, or conduit.

Provisions shall be made to ensure that water does not enter any equipment during shipment or in storage at the plant site.

Returnable containers and special shipping devices shall be returned by the manufacturer's field representative at the Contractor's expense.

1B.7 AID EMBLEM. All shipping containers shall carry the official AID clasped hands emblem. The emblem affixed to each shipping container shall be affixed in such a manner which assures that the emblem will remain legible until the shipment reaches the consignee. Size of the emblem in every case shall be large enough to be clearly visible at a reasonable distance. A list of emblem suppliers is available from AID.

The official AID clasped hands emblem shall be prominently displayed on all ships during loading and unloading when their cargo consists entirely of AID financed goods. Ship charterers shall include instructions relative to display of the emblem in the charter party agreements.

1B.8 WEATHERPROOFING. All outdoor equipment and all appurtenances shall be designed for satisfactory operation during 60 mile per hour wind and driving rain. All exposed unpainted parts shall be fabricated of corrosion resisting metal. All ventilating openings shall be louvered on outdoor equipment to prevent entrance of rain under weather conditions described above. All ventilating openings on outdoor equipment shall be equipped with fine mesh monel filters and stainless steel bug screens.

1B.9 SOURCE OF MATERIALS AND REPAIR PARTS. Equipment and accessories furnished shall be from a reputable manufacturer currently engaged in production of such materials.

Individual parts shall be manufactured to standard sizes and gages so that repair parts, furnished at any time, can be installed in the field.

1B.10 DESIGN COORDINATION. The Contractor shall be responsible for the selection and design of equipment and materials which will provide the best coordinated performance of the entire system. Components of rotating equipment shall be selected so that the natural frequency of the complete unit is not at or critically near the operating range of the unit.

1B.11 CORRECTION OF MANUFACTURING ERRORS. Equipment and materials shall be complete in all respects within the limits herein outlined. All manufacturing errors or omissions required to be corrected in the field shall be done by the manufacturer or his duly authorized representative at the Contractor's expense.

1B.12 EQUIVALENT MATERIALS AND EQUIPMENT. Whenever a material or article is specified or described by using the name of a proprietary product or the name of a particular manufacturer or vendor, the specific item mentioned shall be understood as establishing the type, function, and quality desired.

Other manufacturers' products will be considered provided sufficient information is submitted to allow the Engineer to determine that the products proposed are equivalent to those named.

1B.13 TOOLS. The Contractor shall furnish and ship with the equipment one set of all special tools required for the erection, dismantling, or maintenance of the equipment. The tools shall be shipped in separate heavily constructed wooden boxes provided with hinged covers and padlock hasps.

* Maintenance tools shall be boxed separately and the boxes shall be marked as indicated on the sheet entitled "SHIPPING CONTAINER IDENTIFICATION".

A weatherproofed itemized list of the contents shall also be indicated on the outside of each box.

The maintenance tools shall include all special handling rigs, bars, slings, and cable. All tools shall be in new and unused condition.

1B.14 COMPRESSED AIR. Filtered, dried, oil-free compressed air will be supplied for operation of pneumatic instruments and control valves. Normal house service air will be supplied for operation of other pneumatic devices. The compressed air will be supplied at receiver pressure varying from 70 to 100 psi.

Pressure regulators shall be provided for pneumatic devices which operate at pressure levels other than receiver pressure. Pressure regulators shall be Fisher Controls Co. Model 67 FR with pressure gage, or acceptable equal.

1B.15 CONTROL POWER. Electrical power for control and instrumentation will be a nominal 240 volt, single phase, 50 hertz, alternating current, or a nominal 250 volt direct current. The Contractor shall provide any devices required for proper operation and protection of the equipment during electrical power supply fluctuations described in the following paragraphs.

All dc electrical control and instrumentation devices shall be designed for continuous operation on an ungrounded station battery which will float on trickle charge at 258 volts. The Contractor shall guarantee satisfactory operation when the equipment is continuously energized at any voltage from 200 to 280 volts dc, with ambient temperatures as specified. Electrical devices served from this supply shall not impose any ground connections on it.

All alternating current control and instrumentation devices shall, unless otherwise specified, be designed for operation on a nominal 240 volt, 50 hertz, single phase, alternating current system. The Contractor shall guarantee satisfactory operation when the equipment is continuously energized at any voltage from 190 to 250 volts alternating current. Equipment required for operation at other nominal voltages shall be guaranteed to operate satisfactorily over proportional voltage variations. The dropout voltage shall be less than 140 volts for relays and 175 volts for contactors and starters.

* Refer to Item 14 of Addendum 1

All alternating current and direct current devices shall be guaranteed to operate satisfactorily under voltage conditions specified in the above paragraphs and at a range of ambient temperatures from 50 C to -30 C.

1B.16 AUXILIARY POWER. Auxiliary equipment, such as motors, transformers, and rectifiers, requiring electrical power shall be designed to operate from one of the nominal electrical power sources as follows:

Volts	Phase	Hertz
4160	3	50
416	3	50
240	1	50
250	DC	--

Preferred ac motor ratings shall be in accordance with the following schedule:

Horsepower	Volts	Phase
Below 3/4	220	1
3/4 to 250	380	3
250 and above	4000	3

Emergency motors shall be designed to operate on nominal 250 volts dc with voltage variations as described for dc control power.

Variations from preferred motor design voltages must be acceptable to the Engineer.

1B.17 WELDING. If the manufacturer has special requirements relating to the welding procedures for welds at the terminals of the equipment to be performed under separate specifications, the requirements shall be submitted to the Engineer in advance of all erection work.

1B.18 SHOP COATING. All metallic surfaces subject to corrosion shall be protected by suitable coatings applied in the shop. Surfaces which will be inaccessible after assembly shall be protected for the life of the equipment. The surfaces shall be cleaned and prepared in the shop. All mill scale, oxides, and other coatings shall be removed. Sand or grit blasting of internal areas which will be exposed to steam or treated feedwater will not be allowed. Exposed surfaces shall be finished smooth, thoroughly cleaned, and filled as necessary to provide a smooth uniform base for painting. Surfaces to be finish painted after installation, or requiring paint for corrosion protection until installation, shall be shop painted with one or more coats of primer as hereinafter specified.

* 1B.18.1 Painting. Transformers, switchgear, and other electrical equipment shall be shop finished with one or more coats of primer and two coats of high grade oil resistant enamel. The finish colors shall be manufac-

turer's standards, to be selected specifically by the Owner at a later date. The interior of all panels and switchgear shall be finished with gloss white enamel. A sufficient quantity of paint in each color shall be furnished to provide one complete coat for touchup.

Shop primer for steel and iron surfaces shall be Koppers "622 Rust Penetrating Primer", Mobil "13-R-50 Chromox QD Primer", or Tnemec "77 Chem-Prime" unless otherwise specified.

1B.18.2 Preservative Coatings. Ferrous surfaces which should not be painted shall be coated with rust preventive compound, Houghton "Rust Veto 334" or Rust-Oleum "R-9".

1B.18.3 Galvanizing. When so specified in the detailed specifications, structural steel members and bolts shall be galvanized. After all cutting, punching, reaming, drilling, and capping have been completed, structural steel members shall be "pickled" in accordance with the latest accepted practice, to remove all scale, rust, grease, and other impurities and then hot-dip galvanized in accordance with ASTM A123.

When specified to be galvanized in the detailed specifications, erection and structural bolts shall be galvanized in accordance with ASTM A394 for galvanized steel transmission tower bolts.

1B.19 ALIGNMENT AND BALANCE. All rotating parts shall be true and dynamically balanced. Excessive noise or vibration will be sufficient cause for rejection of the equipment. All rotating equipment shall be balanced at the factory.

1B.20 LUBRICATION. Equipment shall be lubricated by systems designed for continuous operation. Lubrication systems shall not waste lubricants and shall not require attention during startup and shutdown, or more frequently than once weekly.

Oil lubricant level indicators shall be furnished and marked to indicate proper levels under both standstill and operating conditions.

1B.21 DRIVE UNITS. Speed changing equipment furnished as a part of the equipment specified shall conform to the requirements herein.

The nominal horsepower rating of each drive unit shall be at least equal to the theoretical brake horsepower required to drive the equipment under full load, including all losses in speed reducers and power transmission.

The nominal input horsepower rating of each gear or speed reducer shall be at least equal to the nominal output horsepower of the drive motor or to the maximum power requirement for the driven equipment under the design conditions specified, whichever is greater.

Drive units shall be designed for continuous service and shall include provisions which will prevent oil leakage around shafts.

1B.22 SHAFT COUPLINGS. Shaft couplings shall be used between all drives and driven equipment. Couplings shall be attached to driver and driven shafts by press fits and keys.

Shaft couplings shall be sized to transmit the maximum brake horsepower requirements of the driven equipment with a service factor of not less than 2.

Couplings shall be of the all metal lubricated gear flexible type, Koppers "Fast" or acceptable equal.

On applications where the motor is furnished under separate specifications, the motor half coupling shall be machined to the motor shaft dimensions on the motor drawing reviewed by the Engineer, and shipped to the motor supplier for shop mounting. The responsibility for proper fit of the coupling halves shall rest with the coupling supplier.

1B.23 SAFETY GUARDS. Guards shall be provided for protection of personnel from all exposed moving and/or rotating machine elements.

Each guard shall be fabricated from ASTM A36 steel plate having a minimum thickness of 3/16 inch and designed for easy installation and removal. Necessary supports and accessories shall be furnished with each guard.

Guards for outdoor installation shall be galvanized.

1B.23.1 Horizontal Shaft Equipment. Safety guards for horizontal shafts, shaft couplings, belt sheaves, etc. shall be of the inverted "U" design with sides extending to the equipment base or base plate.

1B.23.2 Vertical Shaft Equipment. Safety guards for vertical shafts, shaft couplings, etc. shall be of 360 degree construction with bolted vertical joints. Hinged sections shall be provided for inspection of couplings and glands.

* 1B.24 EQUIPMENT BASES. A cast iron or welded steel base plate shall be provided for all rotating equipment which is to be installed on a concrete base. Each base plate shall support the unit and its drive assembly, shall be of a neat design with pads for anchoring the units, shall have a raised lip all around, and shall have a threaded drain connection.

1B.25 INSTRUMENTATION. Accessory instrumentation components furnished with the equipment shall be in accordance with the requirements stated herein unless otherwise specified in the detail specifications. The devices specified shall be of the manufacture and model number herein specified, or an acceptable equal.

These devices shall be constructed in accordance with the latest applicable requirements of ANSI, ISA, and NEMA.

* Refer to Basis of Contract Award

Permanently affixed, stainless steel tags stamped with the Engineer's tag number and a description of its use shall be furnished on all pressure switches, level switches, temperature switches, temperature elements, and solenoid valves.

Unless otherwise specified, all pressure instruments shall have metric and English scales and all temperature instruments shall have metric scales. Pressure instruments shall have scales in kilograms per square centimeter and in pounds per square inch. Temperature instruments shall have scales in degrees centigrade.

1B.25.1 Limit Switches. Limit switches, except those integrally mounted on motor operated valves, shall be selected from the following alternates:

(a) National Acme Company "Snaplock" Series SL. Switches shall have not less than two dpdt switch elements.

(b) Honeywell "Microswitch" DTF2-2RN, or variation thereof, with two dpdt switch elements

Limit switches shall be constructed to withstand the temperatures encountered in the actual service. Explosionproof construction shall be furnished where required by applicable code or the detailed specifications.

1B.25.2 Pressure Switches. Pressure switches shall be selected as follows:

(a) Static switches shall be Static "O" Ring.

(b) Differential pressure switches for low range application shall be manufactured by FW Dwyer.

(c) Differential pressure applications requiring both indication and pressure switch contacts shall be implemented with equipment manufactured by Barton Instrument Corporation regardless of the range.

Pressure switches shall be furnished in explosionproof construction where required by applicable code or the detailed specifications. Each pressure switch shall be specifically selected for the service in which it is used. The acceptability of each switch with respect to range, overpressure capability, capability, repeatability, and deadband shall be demonstrated to the Engineer.

1B.25.3 Temperature Switches. Temperature switches shall each consist of a thermocouple as described under "Temperature Detectors" and an electronic instrument. Electronic instruments shall be Rochester Instrument Systems, Inc., Series ET-205, complete with dual, double-pole, double-throw relays wired to terminals. Each of the two electronic instrument

relays in a temperature switch shall operate from an independent, calibrated set point. Electronic instruments shall be suitable for use with ISA Type K thermocouples.

1B.25.4 Level Switches. Level switches shall be Magnetrol having float and body construction appropriate to the service conditions of the systems to which they are connected. Switch elements shall be of the mercury bottle type magnetically coupled to the float. Two switch elements shall be available at each level point monitored. Switches shall be reversible for NC or NO operation or shall be double throw construction. Switch element leads shall be of high temperature construction and terminated on terminal blocks within the switch housing. Switch housings shall be splashproof construction, unless otherwise specified.

1B.25.5 Solenoid Valves. Solenoid valves shall be manufactured by Automatic Switch Company. Valves shall be selected to incorporate body construction, trim materials, and internal arrangements suitable to the application and shall be acceptable to the Engineer. Solenoid enclosures shall be NEMA 4 unless otherwise specified. Solenoid coils shall be Class H high temperature construction and shall be suitable for continuous duty.

1B.25.6 Pressure Gages. Gages for control air supply and signal pressures integral to the instrument shall be in accordance with the control manufacturer's standards. All other gages shall be 4-1/2 inch Ashcroft "Duragauge". Dials shall be engraved with service legends, or separate nameplates of engraved laminated phenolic shall be attached to the gage faces to identify the service. Legends shall be as directed by the Engineer. All gages, except on control air service, shall have stainless steel movements and nylon bearings. Gages for panel mounting shall be Type 1377. Gages for separate mountings shall be Type 1379 with 1/2 inch NPT bottom connections. Pulsation dampeners shall be furnished with all gages except control air gages.

1B.25.7 Thermometers. Thermometers for local mounting shall be Ashcroft 5 inch dial AHT 6060 "Every Angle" bimetallic thermometers. Thermometers for panel mounting shall be Ashcroft 4-1/2 inch dial 6135 mercury actuated with Type 1377 case and stainless steel armored capillary tubing of length required for the installation. The dials shall be engraved with service legends, or separate nameplates of engraved laminated phenolic shall be furnished attached to the dial faces to identify the service. Legends shall be as directed by the Engineer. Thermowells shall be furnished for all thermometers and shall be extra heavy solid bored Type 316 stainless steel construction. They shall be threaded and designed to allow seal welding.

1B.25.8 Temperature Detectors. All detectors shall be of the dual element type. Detectors shall be ISA Type K (chromel-alumel) thermocouples with Type KX extension wire. Temperature detectors shall be of the stainless

steel sheathed, compacted magnesium oxide insulated type, and shall be ungrounded unless otherwise specified. Thermocouples and extension wire shall comply to the special limits of error contained in ANSI C96.1-1964.

Thermocouple assemblies shall be complete with cast iron weatherproof connection heads and nipples. Extension nipples, insulating bushings, and compression fittings shall be furnished if required for the application. Heads shall be designed for positive connection and for a terminal temperature differential of not more than 0.1 F. The thermocouple shall be spring loaded for positive contact with the wall. The lead wire for all related detectors shall be brought to common junction boxes.

Fluid system temperature detectors shall be equipped with extra heavy solid bored Type 316 stainless steel thermowells and extension nipples. The thermocouple, extension nipple, and head shall be arranged to permit removal and replacement of the thermocouple with the equipment in operation.

1B.26 ELECTRICAL ACCESSORY DEVICES. Electrical accessory devices shall be furnished in accordance with the requirements stated herein unless otherwise specified in the detailed specification sections.

1B.26.1 Electrical Instruments. All electrical indicating instruments shall be of the switchboard type with one per cent accuracy classification, shall be designed for semiflush mounting and, unless otherwise specified, shall be approximately 4 inches square. All instrument scales shall consist of black markings on a white background. Any instrument which is checked in the field and found to be inaccurate in excess of 2 per cent shall be returned to the Contractor for calibration or replacement without cost to the Owner. All ac instruments shall be designed for operation through 5 ampere current transformers secondaries and 120 volt potential transformer secondaries. Instruments shall be General Electric Type AB-40, Westinghouse Type 241, or acceptable equal.

1B.26.2 Control Relays. General service auxiliary relays shall be I-T-E Type J10A, J11A, J12A, J13P, or acceptable equal. Where current carrying requirements exceed the capacity of the J10A, auxiliary relays shall be General Electric Types HFA or HGA, Westinghouse Type MG-6 or acceptable equal.

Timing relays where the delay period may exceed 3 minutes shall be Agastat Series 7000 or acceptable equal.

1B.26.3 Control Switches. Control switches shall be 600 volt, 20 ampere, multistage, rotary type with a minimum of ten contacts. Switches shall have black, fixed, modern, pistol grip type handles and engraved black plastic escutcheon plates. Switches shall be Westinghouse Type W, General Electric Type SB-1, or acceptable equal.

1B.26.4 Push-buttons and Selector Switches. Push-buttons and selector switches shall be Square D, Class 9001, Type T or TS oiltight, Honeywell-Microswitch Type PT, or acceptable equal.

1B.26.5 Indicating Lights. Indicating lights shall be Honeywell-Microswitch Type PTW with 387 lamps, transparent glass lenses, and appropriately sized resistors. Alternate equal indicating lights must be acceptable to the Engineer.

1B.26.6 Alarm Contacts. Alarm contacts for remote annunciation shall be suitable for operation at 250 volts dc.

1B.26.7 Molded Case Circuit Breakers. Molded case circuit breakers used in equipment covered under these specifications shall have 5000 amperes interrupting capacity at 250 volts dc and 10,000 amperes symmetrical interrupting capacity at 240 volts ac.

1B.26.8 Terminal Blocks. Terminal blocks shall be provided with white marking strips and, where permitted by the safety codes and standards, shall be without covers. Extra terminals in a quantity of not less than
* 25 per cent of the intraconnected terminals shall be provided on each terminal block for circuit modifications and for termination of all conductors in a multiconductor cable.

Fuses shall not be mounted on terminal blocks. Neither step type terminal blocks nor angle mounting of terminal blocks will be acceptable.

All terminal blocks, except internal terminal blocks in factory prewired electronic systems cabinets, shall be rated 600 volts and shall have strap screw terminals. Standard terminal blocks for 10 AWG and smaller conductors shall be General Electric Company Type EB-5 or acceptable equal. Terminal blocks shall be appropriately sized for larger incoming conductors. Shorting type terminal blocks shall be six point General Electric Company Type EB-5 or acceptable equal.

1B.26.9 Fuse Blocks. Where fuse blocks rated 30 amperes, 250 volts are required by the specifications or the manufacturer's design, they shall be modular type with bakelite frame and reinforced retaining clips. Blocks shall be Class H, Model No. 15530 screw terminal fuse blocks as manufactured by Underwriters' Safety Device Co., 4330 North Kedzie Avenue, Chicago, Illinois 60618. Blocks for other current and voltage ratings shall be similar in construction and by the same manufacturer.

** 1B.27 NAMEPLATES. Nameplates for major equipment items such as turbine, generator, etc., shall be lettered in English and Indonesian.

Nameplates shall be provided for pressure gages, thermometers, switches, and other such instruments and shall be lettered in Indonesian as approved by the Engineer.

Panel mounted instruments shall have nameplates made of laminated black phenolic engraving stock with white core. The lettering shall be not less than 1/4 inch square, bold engraved through the black outside layers so that the letters appear white.

Nameplates for locally mounted instruments shall be attached to the faces of the instruments in a manner acceptable to the Engineer.

* Refer to Basis of Contract Award
** Refer to Item 9 of Addendum 3

1B.28 FACTORY PREWIRED ELECTRONIC SYSTEMS CABINETS. Internal wiring in factory prewired electronic systems cabinets may be installed according to the Contractor's standard as to wire size insulation and method of termination on internal equipment. Identification of conductors may be done by insulation color coding identified on drawings or by printed wiring lists. Terminal blocks for connection of external circuits into factory prewired electronic systems cabinets shall meet all the requirements specified above under Terminal Blocks.

1B.29 AC MOTOR STARTERS. The Motor Control Center Specification and Data Sheet, following this section, shows the wiring of the ac motor starters which will be furnished by the Owner. The Contractor shall assure that the control wiring, including terminal designations, is compatible with the starter wiring as shown.

1B.30 RACEWAY. Unless specified otherwise, all raceway interconnections between devices, panels, boxes, and fittings shall conform to ANSI C80.1 and UL 6. All conduit connections shall be of the threaded type. Unless specified otherwise, all conduit shall be hot-dip galvanized rigid steel. All conduit entering outdoor enclosures shall enter through "Meyers Scru-Tite" hubs or threaded openings.

Double locknuts and bushings shall be provided at the termination of all conduit not terminated in hubs. Locknuts shall be designed to securely bond the conduit to the box or cabinet when tightened.

Insulating bushings with insulating inserts in metal housings shall be provided on conduit 1-1/4 inches and larger. Insulating bushings shall be grounding type. Standard bushings shall be galvanized.

Conduit fittings used on outdoor equipment shall be of heavy cast construction and shall be sealed and gasketed.

All conduit shall be installed in exposed runs parallel or perpendicular to dominant surfaces with right angle turns made of symmetrical bends or fittings. A run of conduit shall not contain more than the equivalent of four quarter bends, including those immediately at outlets and fittings. Bends in conduit shall be made without reducing the internal diameter of the conduit.

Conduit shall be supported at intervals not to exceed 5 feet by means of conduit clamps and clamp-backs.

Moisture pockets shall be eliminated from conduit installed on outdoor equipment. If water cannot drain to the natural opening in the conduit system, a hole shall be drilled in the bottom of a pull box or a "C-type" conduit fitting provided in the low point of the conduit run.

Conduit shall be securely fastened to all boxes and cabinets. Threads on metallic conduit shall project through the wall of the box to allow the

bushing to butt against the end of the conduit. The locknuts both inside and outside shall then be tightened sufficiently to bond the conduit securely to the box.

The raceway system provided for all interconnecting wiring shall be acceptable to the Engineer.

1B.31 WIRING. In general, all devices furnished under these specifications and requiring electrical connections shall be designed for wiring into junction boxes or cubicles with terminal blocks. Terminal blocks shall be provided for conductors requiring connection to circuits external to the specified equipment, for internal circuits crossing shipping splits, and where equipment parts replacement and maintenance will be facilitated.

All spare contacts on relays, control switches, limit switches or similar devices shall be wired to accessible terminal blocks for the Owner's future connections. All wiring leaving an enclosure shall leave from terminal blocks and not from other devices in the enclosure.

Auxiliary equipment such as terminal blocks, auxiliary relays or contactors shall be readily accessible. Auxiliary equipment shall be arranged in compartments, cubicles, or junction boxes that a serviceman will have direct access to the equipment without removal of barriers, cover plates, or wiring. Grouped terminal blocks for all external connections shall be provided.

Terminal blocks shall be grouped in instrument and control compartments for easy accessibility unrestricted by interference from structural members and instruments. Sufficient space shall be provided on each side of each terminal block to allow an orderly arrangement of all leads to be terminated on the block.

A shorting type terminal block shall be installed at an accessible location for each current transformer. The shorting terminal block shall be the one nearest the current transformer.

Terminal blocks shall not be mounted in compartments containing cables or buses operating at voltages above 600 volts.

All wiring shall be conservatively selected for the electrical and environmental conditions of the installations. Unless otherwise specified or required otherwise to perform satisfactorily in a particular service, all electrical conductor shall be Class B, stranded copper, 14 AWG or larger. Oil resistant and proper temperature application wiring shall be used throughout. MI cable is not acceptable. Control panel and cabinet wiring shall be stranded copper conductor with NEC Type SIS, cross-linked polyethylene insulation rated at 600 volts, designed for a maximum conductor temperature of 90 C, and shall meet the vertical flame test requirements per IPCEA S-19-81, Paragraph 6.19.6. Conductor insulation for other general

service wiring shall be flame retardant polyethylene according to IPCEA S-19-81, Part 3.18. NEC Type SF-2 silicone rubber insulated cable with braided glass jacket shall be used where ambient conditions cause conductor operating temperatures to exceed 90 C.

Preinsulated ring type wiring terminals with metal reinforced sleeves shall be provided on all conductor terminals. Spade type terminals are not acceptable.

Each terminal block, conductor, relay, breaker, fuse block, other auxiliary device, and terminal shall be permanently labeled to coincide with the identification indicated on the drawings. All terminals provided for termination of external circuits shall be identified by inscribing circuit designations acceptable to the Engineer on the terminal block marking strips with black paint. All other wiring terminations shall be identified either by legible markings on the device terminals or by printing on wire sleeves. Terminal and conductor identification shall be by a permanent method unaffected by heat, solvents, or steam, and not easily dislodged, preferably by means of printing on plastic sleeves. Adhesive labels are not acceptable.

The arrangement of connections on terminal blocks shall be acceptable to the Engineer.

All connections requiring disconnect plug type devices shall be provided with factory terminated conductors on both sides of each plug. Sufficient multiconductor cable shall be provided to connect the plugs into junction boxes containing terminal blocks for the Owner's external connections. All conductors on the disconnect portion of plugs shall be in a common jacket.

All temporary wiring installed in the factory for equipment testing shall be removed prior to shipment of the equipment.

1B.32 CABLE TERMINATION PROVISIONS. Electrical conductors supplying the equipment provided under these specifications will be sized for installation in covered electrical cable tray to a 4 inch loading depth and with 40 per cent random fill. Sizing will be in accordance with the requirements of the following standards:

IPCEA - NEMA Standard of Ampacities of Cables in Trays, 1972

AIEE - IPCEA Power Cable Ampacities Handbook, 1962 (IPCEA P-46-426 & IEEE Publication No. S-135)

IPCEA Short Circuit Characteristics of Insulated Cable, Publication P-32-382, 1969

Capacity of conduit entrances, terminal enclosures, and conductor terminals shall be as required to accommodate either copper or aluminum conductors which are sized as described in the previous paragraph.

ITEM
SPEC
PROJECT

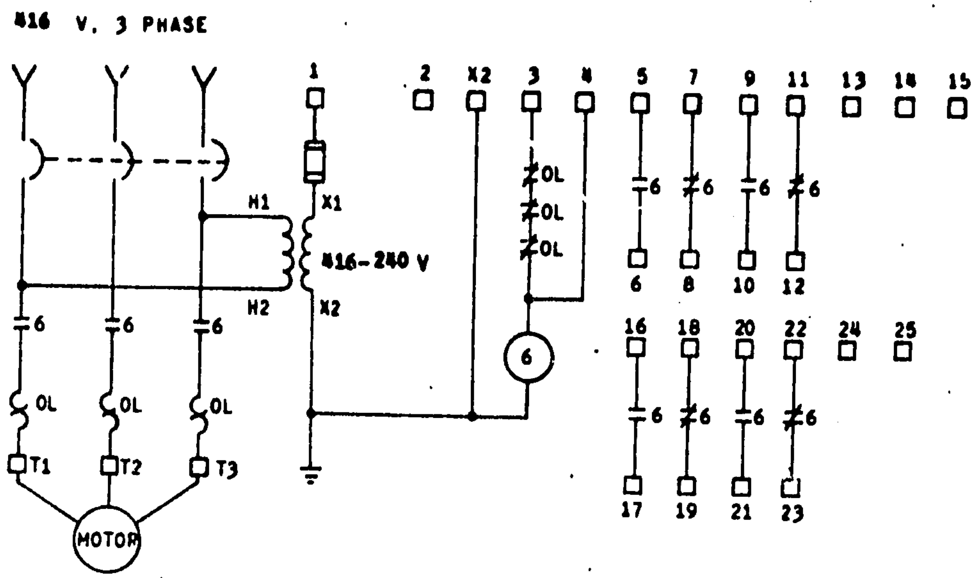

WIRING DIAGRAM COMBINATION FULL VOLTAGE NON-REVERSING STARTER

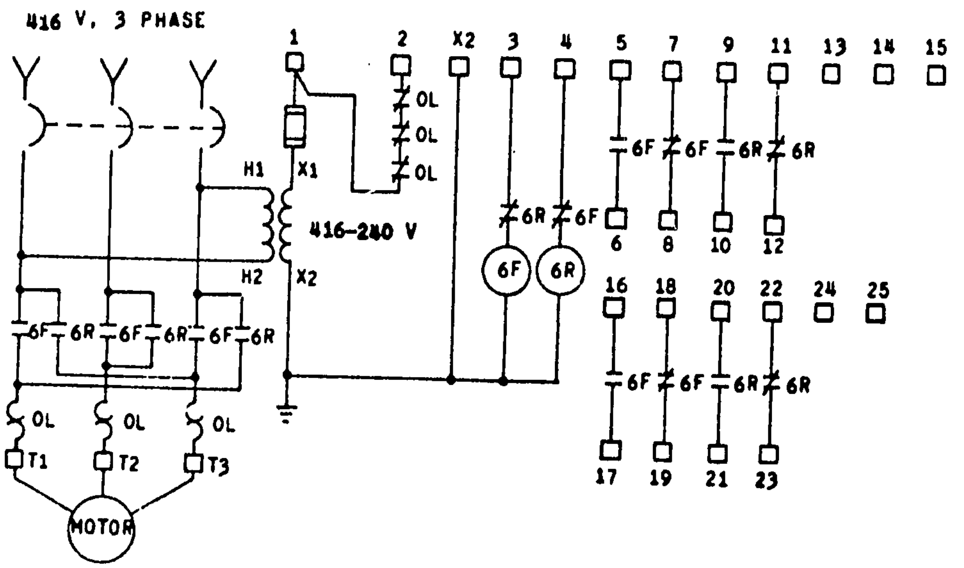

WIRING DIAGRAM COMBINATION FULL VOLTAGE REVERSING STARTER

BLACK & VEATCH INTERNATIONAL CONSULTING ENGINEERS KANSAS CITY, MO.	MOTOR CONTROL CENTER SPECIFICATION AND DATA SHEET	1B-15

YELLOW

PROJECT AID
BARANG PEMERINTAH

RED

BLUE

PERUSAHAAN UMUM LISTRIK NEGARA
PROYEK PLTU SEMARANG
JL. SILIWANGI 379 SEMARANG

L/C NO.:
I.R. NO.:

SEMARANG
INDONESIA

CASE NO.:

GROSS WEIGHT:
NET WEIGHT:
DIMENSION:

NOTES:
1. THE ABOVE MARKINGS ARE TO BE PLACED ON TWO OPPOSITE STANDING SIDES.
2. TAGS ARE TO BE MARKED AS SHOWN ABOVE EXCEPT THAT CORNER MARKINGS ARE NOT REQUIRED.
3. TAGS ARE TO BE PROTECTED FROM FADING.
4. AID "CLASPED HANDS" EMBLEM SHALL ALSO BE APPLIED TO ALL SHIPPING CONTAINERS.

BLACK & VEATCH INTERNATIONAL CONSULTING ENGINEERS KANSAS CITY MISSOURI USA	SHIPPING CONTAINER IDENTIFICATION	PROJECT 6104
	PERUSAHAAN UMUM LISTRIK NEGARA SEMARANG STEAM POWER PLANT UNITS 1 & 2	PAGE 1B-16

Section 1C - ENGINEERING DATA

1C.1 GENERAL. This section covers engineering data, instruction manuals, and manufacturer's drawings which the Contractor shall submit to the Engineer for design information or review. As stipulated in Section 1A, compliance with the specified schedule for drawing and data submittal is
* essential to the scheduled progress and completion of ~~the Unit 2 Addition~~ Units 1 and 2 and is of the essence of this Contract.

1C.2 CORRESPONDENCE. Correspondence forwarding drawings, instruction manuals, and other engineering data shall be addressed as follows:

BLACK & VEATCH INTERNATIONAL
P.O. Box 8405
Kansas City, Missouri 64114
Attention: Mr. L. J. Svoboda

1C.3 PERFORMANCE CURVES. Within 30 days after award of contract, 12 copies of the following performance curves shall be submitted:

State line curves for various load points, showing steam conditions at each extraction stage

Exhaust pressure correction curves

Initial pressure and initial temperature correction curves

Extraction stage and impulse chamber pressure curves

Turbine expansion line end point correction curves

Gland leakage curves

Exhaust loss curves

Water requirements for hydrogen coolers shown as a curve for varying load conditions and hydrogen pressure

Generator loss curve

Reactive capability versus kilowatt load curves at various hydrogen pressures

Generator "V" curves

Zero power factor saturation curve

No-load saturation curve

* Revised for Contract

1C.4 DESIGN DATA. Within 30 days after award of contract 12 copies of the following design data shall be submitted.

1C.4.1 Turbine.

Assembled weight

Maximum overall length, width, and height of turbine for erection purposes

Upper casing weight and laydown dimensions

Rotor weight and dimensions

Name and weight of heaviest piece to be handled during erection

Name and weight of heaviest piece to be handled after erection

Main steam stop valve inlet connection size

Weight of main steam stop valve

Dimensions of exhaust connection

Number and size of all extraction openings

Maximum pressure and temperature at extraction openings

Size and location of vacuum breaker

Turning gear location and engagement system

1C.4.2 Lubricating Oil System.

Overall dimensions of oil tank

Dry and operating weights of oil reservoir

Oil quantities to fill system, tank capacity at normal level, and flowback on shutdown

Flow through system

Temperatures to be maintained during operation and during initial flushing of system

Capacities and heads of all oil pumps

Oil coolers - manufacturer, heat transfer surface, shell material, channel material, tube material, size and gage, and tube sheet material

Water flow required and pressure drop through the oil coolers

1C.4.3 Gland Steam Removal Equipment.

Manufacturer

Required flow and pressure of condensate to spray chamber

Exhauster discharge temperature design point

1C.4.4 Generator.

Assembled weight

Stator weight without end shields

Complete housing dimensions

Rotor weight and dimensions

Calculated generator losses at various hydrogen pressure and loads

Calculated telephone influence factors

Time constants T'_d and T'_{do}

Saturation factor

Winding capacitance to ground, all phases tied together

Generator surge impedance

Inertia of complete turbine generator unit

Number and location of temperature detectors

Maximum temperature rise above ambient gas temperature at guaranteed output for the armature windings, field windings, and core and mechanical parts adjacent to insulation

1C.4.5 Excitation System.

Rated output of exciter and ceiling voltage

Generator field current and voltage at no load and rated voltage and at guaranteed output and rated voltage

Generator field resistance at 25 C

Resistance of field discharge resistor

Maximum continuous field current for 85 C field temperature rise at various hydrogen pressures and when operating air cooled

Minimum field current required to keep generator in step on infinite bus under steady state loading at rated voltage under the specified output conditions

Method of excitation system cooling and, if water cooled, state water flow quantities, maximum pressure, and pressure drop

1C.4.6 Generator Cooling.

Hydrogen coolers - manufacturer; number of coolers; type; material, size, gage, and number of tubes; water pressure drop; and connection size and pressure class

Heat rejection to hydrogen coolers under the specified output conditions

Quantity of hydrogen required to fill generator to 30 psi

Quantity of carbon dioxide required to purge generator of air and of hydrogen

Common cold gas temperature to be maintained

Air circulation and temperature rise through collector or exciter housing

1C.4.7 Motors.

Complete Motor Information Sheets as specified in this section under MOTOR INFORMATION

Complete listing of all other motors giving horsepowers, speeds, voltages, enclosures, full load currents and locked rotor currents

1C.4.8 Accessory Electrical Equipment.

Dimensions and weights of voltage regulation and excitation switchgear group, power potential transformer, and neutral grounding compartment, and surge and potential transformer compartment

Dimensioned locations of terminal boxes and sizes and locations of the conduits that may enter each box

1C.5 MOTOR INFORMATION. A sample Motor Information Sheet is bound at the end of Subsection 1D1. The successful bidder will receive one copy of this form for each motor for which a Motor Specification and Data Sheet has been included in these specifications. These sheets shall be completed and copies submitted as specified in this Section 1C. The number of copies required shall be the same as for other manufacturers' drawings.

1C.6 DRAWINGS. Drawings shall be submitted for the Engineer's review in accordance with the following procedures and schedules.

1C.6.1 Procedures. Drawings shall be in sufficient detail to show the kind, size, arrangement, weights of each component, breakdown for shipment, and operation of component materials and devices, the external connections, anchorages and supports required; the dimensions needed for installation and correlation with other materials and equipment; and the information specifically requested in this section under "Schedules".

Six copies of each drawing, preliminary or certified, shall be submitted to the Engineer. Each drawing submitted shall be clearly marked with the name of the project, the specification number, the Engineer's assigned number, the Contractor's name, and references to applicable specification paragraphs. When catalog pages are submitted, the applicable items shall be indicated.

"Preliminary" drawings shall be reasonably complete and suitable for the Engineer's use in establishing basic plant arrangement and design requirements. Preliminary drawings will not be reviewed by the Engineer; however, the Engineer will refer to the Contractor conflicts or discrepancies which he may discover in his reference to the drawings.

"Certified" drawings will be reviewed by the Engineer and returned to the Contractor marked RETURNED FOR CORRECTION, EXCEPTIONS NOTED, NO EXCEPTIONS NOTED, or RECEIVED FOR DISTRIBUTION.

When the drawings are returned marked NO EXCEPTIONS NOTED or RECEIVED FOR DISTRIBUTION, additional copies shall be submitted to the Engineer for distribution. The number of additional copies will be determined by the Engineer, but will not exceed six.

When the drawings are returned marked EXCEPTIONS NOTED the changes shall be made as noted thereon and corrected copies shall be submitted to the Engineer for final review and distribution. The number of corrected copies will be determined by the Engineer, but will not exceed twelve.

When the drawings and data are returned marked RETURNED FOR CORRECTION the corrections shall be made as noted thereon and as instructed by the Engineer and six corrected copies shall be resubmitted for review.

The Engineer's review of drawings and data will cover only general conformity to the specifications and the external connections and dimensions which affect the plant arrangement. The Engineer's review of drawings returned marked NO EXCEPTIONS NOTED, or EXCEPTIONS NOTED does not indicate a thorough review of all dimensions, quantities, and details of the material, equipment, device, or item shown and does not relieve the Contractor from any responsibility for errors or deviations from the specification requirements.

No work shall be performed in connection with the fabrication or manufacture of equipment and materials until the drawings and data therefor have been reviewed by the Engineer. Work may proceed on equipment and materials when the drawings and data therefor have been returned marked NO EXCEPTIONS NOTED or RECEIVED FOR DISTRIBUTION and when drawings have been marked EXCEPTIONS NOTED provided the work is performed in accordance with the Engineer's notations.

All drawings, after final processing by the Engineer, shall become a part of the specification documents and the work shown or described thereby shall be performed in conformity therewith unless otherwise required by the Owner or the Engineer.

When changes in the wiring and equipment are made in the field to correct shop construction errors or to adapt the requirements to the Owner's requirements, the Contractor shall prepare and submit 12 copies of record drawings to the Engineer to show the equipment as finally installed.

Upon receipt from the Engineer of drawings marked NO EXCEPTIONS NOTED or RECEIVED FOR DISTRIBUTION, the Contractor shall transmit two full size reproducible prints of each drawing to the Engineer. The reproducible shall be right reading, on 0.003 inch thick Du Pont wash-off mylar and shall not exceed 34 inches by 44 inches in size. Diazo sepias, black line mylar, or auto-positive reproducibles will not be acceptable.

Three microfilm aperture cards of each final drawing shall be submitted. Microfilming and aperture card mounting shall be in accordance with the applicable requirements of Military Specifications MIL-M-9868, and MIL-M-38761.

1C.6.2 Schedules. Drawings shall be submitted in accordance with the following schedules. The number of days specified shall be from and after the date of contract award.

a. Preliminary issue within 30 days and certified issue within 90 days:

All drawings required for design of the Owner's major piping connecting to the turbine generator and for design of the turbine generator foundation. These drawings shall show turbine generator and exciter outline dimensions, loads, anchors, setting and alignment details, foundation openings, condenser loading, and station service data.

b. Preliminary issue within 30 days and certified issue within 120 days:

Drawings of all separately mounted equipment showing all information required for setting and piping the items. This shall include outline drawings of the oil reservoir, lube oil purifier control equipment, supervisory instruments, gland steam equipment, voltage regulator, exciter, power potential transformer, surge and potential transformer compartment, accessory electrical equipment and hyrogen generator.

All drawings required to show electrical connections of all equipment furnished

c. Preliminary issue within 90 days and certified issue within 120 days:

All drawings required to show turbine generator miscellaneous piping connections and any other piping connections not shown on previous drawings. This shall include piping diagrams as required to show manufacturer's requirements for the Owner's piping system.

Arrangement drawings of all piping and accessories furnished, as required for the Engineer's check of the layout for these items

d. Preliminary issue within 90 days and certified issue within 150 days:

Drawings as required to show the details of construction and internal wiring of all equipment and equipment components furnished. Detailed drawings of standard gages, instruments, valves, and similar miscellaneous items need not have a preliminary issue but certified drawings of these items shall be submitted within the 150 days.

1C.6.3 Wiring Diagrams. Connection and interconnection wiring diagrams furnished by the Contractor shall meet the requirements of ANSI Y 14.15a-1971, Section 15-11, Article 15-11.3.2.1, BRANCHED HIGHWAY. The wiring drawings shall be drawn with all devices shown in their relative physical locations. Wiring digrams shall be rear view. Each device connection shall have near each termination, shown in separate breaks, the opposite end destination.

Wiring diagrams shall be prepared on sheets approximately 34 inches by 44 inches. Where interconnecting wiring from different items of equipment or sectional wiring diagrams of the same item of equipment appear on different

wiring diagram sheets, all interconnections shall be clearly identified. Where sectional wiring diagrams are required for a single item of equipment such as a relay panel or control panel, that section of the panel which is represented by each individual wiring diagram sheet shall be keyed on that sheet in a manner acceptable to the Engineer.

Information shown on the Contractor's drawings shall include wiring of the individual panel items as they actually will appear in the panel, contact arrangements of switches, and internal wiring of relays and instruments.

Elementary diagrams shall be cross-referenced to terminal markings on the connection and interconnection diagrams, but need not show complete details of circuits external to the panels. Each item of panel mounted equipment shown on the diagrams shall be identified by item number and name.

Sufficient space shall be left on the Owner's side of outgoing terminal blocks for adding cable color codes and circuit numbers.

1C.7 INSTRUCTION MANUALS. The Contractor shall furnish 10 complete and final copies of instruction manuals for the equipment not later than 30 days prior to the shipment of the equipment.

Nine final copies of the instruction manuals shall be sent to the Owner and 1 final copy shall be sent to the Engineer.

Manuals shall be assembled and bound in Buchan Type ORL (old style) binders covered with pyroxylin impregnated black buckram covers, manufactured by Buchan Loose Leaf Records Co., Clifton Heights, Pennsylvania. Binders shall not be geater than 3-1/2 inches thick and shall be adjustable to permit secure compact binding. Each binder shall be stamped with the proper identification as indicated on Drawing A6104-030273 bound at the end of this section. Binders shall be black with gold lettering.

A complete proofed copy of the proposed manual, including cover lettering, shall be submitted to the Engineer for acceptance. After acceptance, the remaining copies shall be submitted as directed by the Engineer.

The manuals shall include the following:

Table of Contents and index tabs

Specifications, test data, and curves

Description of the equipment

Operating instructions

Instructions in methods of receiving, inspection, storage, and handling

Complete installation and maintenance instructions

Assembly drawings

Parts lists

Schedule of required lubricants

Nameplate information and shop order numbers for each item of equipment and component part thereof

List of recommended spare parts and prices

List of maintenance tools furnished with the equipment

NAME
OF
EQUIPMENT

PERUSAHAAN
UMUM LISTRIK
NEGARA

SEMARANG
STEAM POWER
PLANT

UNITS
1 & 2

VOLUME
NUMBER*

(Backbone)

PERUSAHAAN UMUM LISTRIK NEGARA
AGENCY OF MINISTRY OF PUBLIC WORKS AND POWER
GOVERNMENT OF REPUBLIC OF INDONESIA
JAKARTA, INDONESIA

SEMARANG STEAM POWER PLANT
100 MW (2 x 50 MW) UNITS 1 & 2

INSTRUCTION BOOK

FOR

NAME OF EQUIPMENT

VOLUME NUMBER*

MANUFACTURER'S NAME
MANUFACTURER'S ADDRESS

AID LOAN 497-H-024

BLACK & VEATCH INTERNATIONAL
CONSULTING ENGINEERS
KANSAS CITY, MISSOURI, U.S.A.

(Cover)

NOTE:

Cover Type: Large - 36 point Alternate Gothic #2
Medium - 16 point Futura Medium
Small - 12 point Futura Medium

Backbone Type: All same point size of Alternate Gothic #2 (Either 10 point, 12 point or 14 point) as backbone width allows.

* Stamp cover with volume number if instructions are contained in more than one volume

TYPICAL EQUIPMENT INSTRUCTION BOOK COVER

BLACK & VEATCH INTERNATIONAL CONSULTING ENGINEERS KANSAS CITY, MO., U.S.A.	PERUSAHAAN UMUM LISTRIK NEGARA SEMARANG STEAM POWER PLANT UNITS 1 & 2	A6104-030273

Section 1D - ELECTRIC MOTORS

1D.1 GENERAL. These motor specifications are applicable to all electric motors required for the operation of the equipment furnished. The Contractor shall list and include as part of the Proposal the motors being furnished and they shall be in accordance with these specifications.

Subsection 1D1 - INTEGRAL HORSEPOWER AC MOTORS, 600 VOLTS AND BELOW

1D1.1 GENERAL. These motor specifications are applicable to all integral horsepower ac motors, 600 volts and below required for the operation of the equipment furnished.

1D1.2 CODES AND STANDARDS. All motors shall be designed and fabricated to conform to the requirements of applicable ANSI, IEEE, and NEMA standards.

1D1.3 RATING. Unless otherwise stated in the technical sections or on the Motor Specification and Data Sheets, all integral horsepower motors shall be designed for operation on 380 volts, 3 phase, 50 hertz.

Motors shall be designed for full voltage starting, frequent starting where required, and shall be suitable for continuous duty in the specified ambient. Intermittent duty motors may be furnished where recognized and defined as standard by the equipment standards and codes. Motors shall be sized for the altitude at which the equipment will be installed.

The electric motor brake horsepower required to drive the furnished equipment at the maximum design point of the equipment shall not exceed the motor rating at 1.0 service factor. Motors shall be sized so that, under maximum load conditions imposed by the driven equipment, the motor has an additional continuous rated overload capacity of not less than 15 per cent. Motors with a service factor of 1.15 may be applied up to full nameplate horsepower rating. Motors with a service factor of 1.00 may be applied up to 87 per cent of full nameplate rating.

1D1.4 NAMEPLATE DATA. All motor nameplate data shall conform to NEMA MG 1 requirements. The following additional nameplate data shall be included:

Manufacturer's identification number
Frame size number
Insulation system class designation
Service factor
Locked-rotor kVA code letter
Starting limitations, if any
Direction of rotation and voltage sequence as specified later

1D1.5 TERMINAL MARKINGS. Terminal markings for motors shall be in accordance with Part 2 of NEMA MG 1 standards.

1D1.6 DESIGN AND CONSTRUCTION. Design and construction of each motor shall be coordinated with the driven equipment requirements.

1D1.6.1 Service Factor. For all motors 200 horsepower or less furnished with a service factor greater than 1.0, the service factor shall be in accordance with NEMA MG 1-12.47.

For all motors rated above 200 horsepower furnished with a service factor greater than 1.0, the motor nameplate shall show the horsepower rating at 1.0 service factor, and the service factor. The motor shall be designed to provide a continuous horsepower capacity equal to the rated horsepower at 1.0 service factor multiplied by the specified motor service factor without exceeding the total limiting temperature rise stated in these specifications for the insulation system and enclosure specified.

1D1.6.2 Enclosures. All motors shall be self-cooled.

Motors shall be totally enclosed and of the correct type enclosure for the particular service as specified in NEMA MG 1-1.26.

Motors for outdoor service shall have all exposed metal surfaces protected, where practical, with a corrosion resistant polyester paint or coating. Exposed unpainted and uncoated metal surfaces shall be of a corrosion resistant material. Motors for outdoor service shall have NEMA waterproof enclosures.

The fan hoods of totally enclosed fan cooled motors shall meet NEMA MG 1 requirements for a fully guarded machine.

Totally enclosed motors shall be furnished with drain plugs, and with cast iron frames, bearing brackets, and terminal housings. Fan cooled motors shall have fans fabricated of corrosion resistant metal and cast iron fan covers. Drain plugs shall be Crouse-Hinds Type ECD "Universal" combination water drain-breather type or acceptable equal. Rotating shaft seal is preferred on shaft extenension end of motor.

All motor nameplates and attachment pins shall be corrosion resistant material.

1D1.6.3 Insulation. All insulated windings shall have nonhygroscopic Class B, sealed insulation system rated for temperature rise and ambient temperature in accordance with NEMA MG 1 standards for the insulation class specified except for motors having a service factor greater than 1.0. The observable temperature rise measured by resistance for motors having a service factor greater than 1.0 shall not exceed 80 C when operating at service factor load.

When ambient temperatures greater than 40 C are specified, the observable temperature rise shall be reduced in accordance with NEMA MG 1 standards.

All motors shall be rated for operation in 50 C ambient.

For the sealed insulation system specified, two additional dips and bakes of epoxy varnish or vacuum-pressure impregnation shall be included to provide a premium insulation for random windings. Sealed insulation for formed coil windings shall be in accordance with the requirements of NEMA MG 1 standards.

The insulation resistance corrected to 40 C shall be not less than motor rated kV+1 megohms for all windings.

1D1.6.4 Space Heaters. All motors furnished in NEMA 180 frame series or larger shall have 240 volt, single phase, 50 hertz space heaters. Space heaters shall be provided inside the motor enclosure in a location suitable for easy removal and replacement. Space heaters shall be of the capacity required to maintain the motor internal temperature above the dew point when the motor is idle and shall be isolated by a heat insulation barrier or located so as not to cause heat damage to adjacent painted surfaces. Space heater leads shall be 600 volt stranded copper cable and shall include terminal connectors.

1D1.6.5 Terminal Housings. A single terminal housing for motor power leads and accessory leads shall be furnished on all motors.

Terminal housings shall be cast iron. Housings shall be diagonally split with a gasket between the diagonally split halves of the housing. Each housing shall have a threaded opening to provide a watertight rigid connection with the conduit and shall be designed for rotation in 90 degree increments, or provisions included otherwise, to receive conduit from any of four directions. A nonconducting motor lead positioner and gasket shall be furnished between the housing and the motor frame. All motor leads located in the housing shall have terminals and shall be permanently numbered for ease of identification.

All motor power lead terminal housings shall be at least one size larger than normally furnished as standard, and shall be arranged for removal of the motor after installation without disconnecting the motor power and accessory raceways from the housing.

1D1.6.6 Leads. All leads including motor power leads and space heater leads shall be wired into the terminal housing. All motor leads and their terminals shall be marked in accordance with the requirements of NEMA MG 1, Part 2.

All motors rated 100 horsepower and larger, and all motors furnished with unidirectional blowers shall have the direction of rotation marked by an arrow mounted visibly on the stator frame near the terminal housing or on the nameplate and the leads marked for phase sequence T1, T2, T3, to correspond to the direction of rotation and supply voltage sequence.

1D1.6.7 Terminals. Leads shall be cable type with Burndy Type YA (long barrel) or equivalent compression type connectors.

1D1.6.8 Ground Connectors. Motors shall be furnished with a grounding connector attached to the motor frame inside the motor power lead terminal housing. The grounding connector may be a lug or terminal or other acceptable grounding connector.

1D1.6.9 Bearings. Motors furnished in NEMA 360 frame series and larger shall be provided with oil lubricated sleeve bearings. Motors furnished in smaller frame sizes shall be provided with grease lubricated, rolling element, self-lubricated, regreaseable type bearings.

Grease or oil lubricated rolling element thrust and radial bearings shall be designed and fabricated in accordance with AFBMA standards to have a minimum L-10 life rating of not less than 130,000 hours under the load, speed, and thrust requirements for direct coupled service and not less than 42,500 hours for belt or chain connected service. Grease lubricated radial bearings shall be double-shielded.

Sleeve bearings shall be oil-ring lubricated type with mountings provided with oil level sight glasses marked for required oil level at motor running and motor standstill. The oil ring shall be one-piece construction; split type construction will not be acceptable. Stationary labyrinth seals shall be bronze material.

Sleeve bearings, end bells, and bearing housings for horizontal motors shall be split type when available for the frame and enclosure specified. Air gap measurement holes or other acceptable means shall be provided in each motor end enclosure for checking air gap of sleeve bearing motors.

Sleeve bearings on horizontal motors shall be designed and located centrally with respect to running magnetic center to prevent the rotor axial thrust from being continuously applied against either end of the bearing. The motors shall be capable of withstanding without damage the axial thrusts that are developed when the motor is energized.

Insulation shall be provided to prevent circulation of shaft current on sleeve and plate type bearings, on oil piping connections for external bearing lubrication systems and, when required, on rolling element bearings.

Thrust bearings for vertical motors shall be capable of operating for extended periods of time at any of the thrust loadings imposed by the specific piece of driven equipment during starting and normal operation without damage to the bearing, the motor frame, or other motor parts.

Stacked rolling element bearings will not be acceptable except for vertical thrust bearings in frame sizes up through NEMA 360 Series open type enclosures and up through NEMA 680 Series totally enclosed type enclosures. Where stacked bearings are furnished, matched pair, ABEC Grade 3, precision tolerance bearings with flush ground sides shall be provided. Bearing seats on the shaft and the bearing in housing shall have accuracy equal to that of the bearing.

All mountings for bearings shall be designed to prevent the entrance of lubricant into the motor enclosure or dirt into the bearings, and shall be provided with pipes, drain plugs, and fittings arranged for safe, easy relubrication from the outside of the motor while the motor is in service.

Bearing lubrication shall be furnished by an internal lubrication system.

The Contractor shall furnish all lubrication information required to assure proper equipment startup and subsequent bearing maintenance. Motors furnished with rolling element bearings shall have the AFBMA bearing identification number shown on a nameplate attached to the motor frame.

1D1.6.10 Rotors. All induction motors shall have squirrel-cage rotors. Rotors shall be adequately sized to avoid overheating during acceleration of the motor and driven equipment. Rotors not of integral die cast construction shall be furnished with copper or copper alloy cage material.

All motor rotating components shall be dynamically balanced after mounting on the shaft. Motor vibration shall not exceed the peak-to-peak amplitude values given in NEMA MG 1 standards when measured in accordance with those standards.

1D1.6.11 Shafts. Where shipment permits, motor output shafts shall be complete with motor half coupling mounted, connected to the driven equipment, and adjusted ready for operation. Where motor size prevents shipment with motor connected to driven equipment, the motor half coupling shall be factory mounted for field connection to the driven equipment.

The output shaft of motors furnished with sleeve bearings shall be circumscribed with permanent marks indicating the motor magnetic center and end float limits when level and running at rated speed. A permanent, identified reference point shall be indicated or attached to the bearing housing or shaft seal. The markings shall be easily identifiable for use during motor installation.

Rotor end float and coupling end play for horizontal sleeve bearing motors shall be in accordance with NEMA MG 1-14.37. The minimum rotor end float in fractions of an inch and the maximum diameter in inches of the lathe center in the shaft extension shall be shown on the motor dimensional outline drawing.

1D1.6.12 Torque Characteristics. The torque characteristics of all induction motors at 90 per cent rated voltage or at the starting conditions shown on the Motor Specification and Data Sheets shall be as required to accelerate to full speed the inertia loads of the motor and driven equipment without damage to the motor or the equipment. Locked-rotor current at rated voltage of all induction motors shall be the minimum within the standard design limits used. All motors shall be designed and fabricated to withstand the forces of across-the-line starting at 110 per cent rated voltage.

1D1.6.13 Critical Speeds. Motors shall be designed to keep torsional and rotational natural frequencies of vibration outside of the motor rated speed ranges to avoid resonant vibration over the operating speed range of the equipment-motor unit.

1D1.6.14 Noise Level. The average no-load overall sound pressure level re 0.0002 dynes/cm^2 shall not exceed 90 dBA measured 3 feet from major machine surfaces for motors furnished in NEMA 440 series frame sizes and smaller. The sound level for motors furnished in frame sizes larger than NEMA 440 series shall not exceed 90 dBA measured 5 feet from major machine surfaces. Sound pressure levels shall be determined from 5-position readings.

Octave band sound pressure level values re 0.0002 dynes/cm^2 dBC shall be included on each Motor Information Sheet.

In addition to conformance with the specified noise level, single frequency air-borne windage noise shall not exceed levels which can produce damage to the human ear.

Noise level measurements shall be in accordance with requirements of IEEE No. 85 Test Procedures.

Sound reduction baffles, mufflers, and materials shall be contained within the motor enclosure, except external-fan mufflers may be furnished for totally enclosed fan cooled motors.

1D1.7 FACTORY TESTS AND INSPECTION. Each motor shall be tested and inspected at the manufacturer's factory to determine that it is free from electrical or mechanical defects and to provide assurance that it meets the requirements of these specifications.

1D1.7.1 Routine Tests and Inspection. Routine tests and inspections shall be made on each motor. These shall include the following:

No-load running current at normal voltage
Locked-rotor current at fractional voltage

Measurement of winding resistance
Dielectric test
Inspection of bearings and bearing lubrication system

Five copies of reports of the routine test for each motor shall be included with the dimensional outline drawings submitted to the Engineer. For motor rated above 100 horsepower, the test reports shall be submitted to the Engineer prior to shipment of the motor from the manufacturer's factory.

In each case where the motor design furnished is an electrical duplicate of one which has been manufactured and completely tested to determine performance characteristics, five copies of reports covering the results of the performance tests for the design, including a speed-torque-current curve, shall be provided in addition to the routine test specified. Electrical duplicate design includes those designs which are considered a "ratio-of-voltage" to the specified voltage.

1D1.8 MOTOR INFORMATION SHEETS. After award of contract, in accordance with the schedule specified in Section 1C, the Contractor shall complete and submit copies of the Motor Information Sheets for each motor furnished with all motor data filled in.

1D1.9 MANUFACTURERS. Motors shall be as manufactured by one or more of the following:

Allis-Chalmers
Century
General Electric
Reliance
U.S. Motors
Westinghouse

MOTOR _____

ITEM _____
SPEC _____
PROJECT _____

MOTOR DATA TO BE SUBMITTED BY SUCCESSFUL BIDDER AS SPECIFIED

INFORMATION REQUIRED FOR ALL MOTORS.

HP _____

FULL LOAD SPEED _____ RPM

FULL LOAD CURRENT _____ AMPS

LOCKED ROTOR CURRENT _____ AMPS

TOTAL MOTOR WT _____ LBS

SPACE HEATERS (IF FURNISHED)

NUMBER OF UNITS _____

UNIT RATING, WATTS _____

TEMP. RISE _____ C BY RESISTANCE AT SERVICE FACTOR OF 1.0 ____ ; 1.15 _____.

SOUND LEVELS:

* SOUND POWER LEVEL RE 10-12 WATTS _____ dBA FREE FIELD

INFORMATION REQUIRED FOR ALL MOTORS 200 HP AND LESS

SOUND LEVELS:

OVERALL MEAN SOUND PRESSURE LEVEL RE 0.0002 DYNES/CM^2 REFERENCE DISTANCE OF 3 FEET _____ dBA FREE FIELD

INFORMATION REQUIRED FOR MOTORS LARGER THAN 200 HP

EFFICIENCY, PER CENT

LOAD: 1/2 ____ 3/4 ____ 4/4 _____

POWER FACTOR, PER CENT

LOAD: 1/2 ____ 3/4 ____ 4/4 _____

MINIMUM STARTING VOLTAGE IN PER CENT OF FULL VOLTAGE:

CALCULATED: _____

SPECIFIED: _____

OUTLINE DWG. NO. _____

ALLOWABLE STARTS _____

ACCELERATING TIME:

AT FULL VOLTAGE _____ SEC.

AT STARTING VOLTAGE _____ SEC.

LOCKED ROTOR PF _____ PER CENT

LOCKED ROTOR TORQUE _____ FT-LB

PULL UP TORQUE _____ FT-LB

BREAKDOWN TORQUE _____ FT-LB

TOTAL ROTOR WT _____ LBS

ROTOR INERTIA _____ LB-FT^2

OPEN CIR. TIME CONS'T. _____ SEC.

LOCKED ROTOR SAFE STALLED TIME

AT FULL VOLTAGE _____ SEC.

AT STARTING VOLTAGE _____ SEC.

FOR VERTICAL MOTORS: REED FREQUENCY _____ CPS

SOUND LEVELS:

OVERALL MEAN SOUND PRESSURE LEVEL

RE 0.0002 DYNES/CM^2 AT 5 FEET _____ dBA FREE FIELD

OCTAVE BAND MEAN SOUND PRESSURE LEVEL

RE 0.0002 DYNES/CM^2 REFERENCE DISTANCE OF 5 FEET

FREQUENCY RANGE, CPS	LEVEL, dBC
90-180	_____
180-355	_____
355-710	_____
710-1400	_____
1400-2800	_____
2800-5600	_____
5600-11200	_____

FOR MOTORS FOR WHICH DIFFERENTIAL PROTECTION IS SPECIFIED:

STATOR CONN: WYE _____

DELTA _____

FOR HORIZONTAL MOTORS RATED 1000 HP AND LARGER AT 3600 RPM AND FOR ALL MOTORS RATED 3500 HP AND LARGER AT ALL SPEEDS:

CRITICAL SPEEDS: FIRST CRITICAL _____ RPM

SECOND CRITICAL _____ RPM

* Revised in accordance with Item 8 of Addendum 2

BLACK & VEATCH INTERNATIONAL
CONSULTING ENGINEERS
KANSAS CITY, MO.

MOTOR
INFORMATION SHEET

1D1-8

Subsection 1D2 - FRACTIONAL HORSEPOWER AC MOTORS

1D2.1 GENERAL. These specifications supplement the integral horsepower ac motor section and cover all general, special, and definite purpose fractional horsepower motors provided in NEMA 2-digit frames. Motors provided under these specifications including gearmotors and those constructed integrally with the driven equipment shall be the manufacturer's proven design standard furnished completely assembled, lubricated, and ready for operation.

The requirements of the individual technical sections shall govern where conflicts occur.

1D2.2 CODES AND STANDARDS. In addition to the requirements of the integral horsepower ac motor section, all motors shall be selected for installation and use for the equipment duty service in accordance with NEMA MG 1 and MG 2 requirements.

1D2.3 RATING. Motor rating, service factor and nameplate data shall conform to the requirements of NEMA MG 1 standards. Motors shall be designed for full voltage starting, frequent starting where required, and shall be suitable for continuous duty in the specified ambient. Intermittent duty motors may be furnished where recognized and defined as standard by the equipment standards and codes.

Motor nameplate horsepower ratings shall not be exceeded when the equipment is operating within the limits of the design conditions specified. The motor loading shall not exceed the motor service factor rating under starting conditions or at the equipment maximum load point.

All motor locked-rotor and torque characteristics shall be in accordance with the requirements of NEMA MG 1 Standards for the design classification specified or furnished. Motors shall be suitable for accelerating the driven equipment inertia loads without damage to the motor or equipment.

Unless specified otherwise in the individual technical sections, all ac motors shall be designed for operation on 380 volts, 3 phase, 50 hertz for motors 3/4 horsepower and larger, and 200 volts, single phase, 50 hertz for motors less than 3/4 horsepower.

1D.2.4 DESIGN AND CONSTRUCTION. Type, design, and construction of each motor shall be coordinated with the driven equipment requirements as specified in the individual technical sections.

1D2.4.1 Shafts. Shafts shall be furnished with corrosion resistant treatment unless a corrosion resistant material is specified.

1D2.4.2 Enclosures. Enclosures shall be in accordance with the requirements of the subsection of these specifications "INTEGRAL HORSEPOWER AC MOTORS".

1D2.4.3 Insulation. All motors shall have Class B insulation in accordance with the requirements of the integral horsepower section except temperature rise shall be in accordance with NEMA MG 1 standards.

1D2.4.4 Terminals and Leads. Terminal and lead details including identification, dimensions and locations of terminal housings, terminal boards, combination spade, screw, or stud terminals, and terminal spacing shall be in accordance with NEMA MG 1 and MG 2 standards. Where supplied, terminal boards shall be fabricated of nonhygroscopic material. When dual voltage rated motors are furnished as standard, the leads shall be easily connected or reconnected in the terminal housing for either operating voltage. Permanent instructions for making these connections shall be furnished inside the terminal housing or on the motor frame or nameplate.

1D2.4.5 Ground Connectors. All motors, including those with resilient mountings, shall be furnished with a common ground connection in accordance with NEMA MG 2-2.06. Provisions for ground connection shall be furnished inside the motor terminal housing for 12 AWG grounding cable.

1D2.4.6 Rotors. All motor rotors shall be designed adequately sized to avoid overheating during acceleration of the motor and driven equipment. Rotors shall be keyed or otherwise securely mounted on the motor shaft and shall be dynamically balanced. Starting switches, where required, shall be designed to provide quiet, positive action at the proper opening and closing speed.

1D.2.4.7 Bearings. In addition to the requirements of the subsection of these specifications "INTEGRAL HORSEPOWER AC MOTORS", bearings for fractional horsepower motors shall be designed to operate in any position or angle. One-piece sleeve bearings with wick lubrication shall be furnished where available. Ball bearings shall be furnished where sleeve bearings are not available and where axial thrust loads exceed 20 pounds.

1D2.4.8 Capacitors. Capacitors, where required, shall be furnished in removable metal enclosures mounted on the motor frames. Lock washers shall be furnished under the capacitor enclosure holddown screws.

1D2.4.9 Thermal Protection. Manual reset thermal protection, for both stalled rotor and overload protection, shall be furnished on all motors where available unless specified otherwise in the individual technical sections.

1D2.5 TESTS. Routine tests in accordance with NEMA MG 1 requirements shall be performed on each motor at the factory to determine that there are no electrical or mechanical defects.

1D2.6 MANUFACTURER. The motor manufacturer shall be as selected by the Contractor.

Subsection 1D3 - VALVE MOTOR OPERATORS

1D3.1 GENERAL. These motor specifications are applicable to all electric motors required for operation of motor operated valves furnished under these specifications.

The electric motor operators shall be designed especially for heavy-duty power plant valve service and shall be "Limitorque" as manufactured by Philadelphia Gear Works, Inc. Valve motor operators shall have all metal gear trains. Fiber gears are not acceptable.

1D3.2 CODES AND STANDARDS. Operator motors shall be designed and fabricated to conform to the applicable requirements of NEMA, ANSI, AFBMA, and IEEE standards, and shall be selected and applied for the equipment duty service in accordance with the requirements of NEMA MG 1 and MG 2 standards and NEC.

1D3.3 RATING, DESIGN, AND CONSTRUCTION. Motors shall be designed for 380 volt, 3 phase, 50 hertz, high torque service in a 50 C ambient temperature. Motors shall have Class B nonhygroscopic insulation sealed with two additional dips and bakes of epoxy varnish. Temperature rise shall not exceed 70 C rise by resistance in 50 C ambient for the time rating furnished.

Motor starting torque shall not be less than 500 per cent of rated full load torque. Motor time rating shall be as required for two successive open-close operations. In no case shall the time rating be less than 15 minutes.

Sufficient torque shall be provided to open or close the valve against maximum differential pressure at 90 per cent nominal voltage.

Motors shall be furnished with cast iron, totally enclosed, NEMA waterproof, nonventilated enclosures suitable for outdoor service. Double-shielded, grease prelubricated antifriction bearings having AFBMA minimum L-10 life rating of not less than 100,000 hours shall be furnished. Motor leads shall be terminated in the limit switch compartment.

All motor operators shall be supplied with 240 volt ac, single phase, 50 hertz space heaters located in the limit switch compartment. Motor operators provided with a motor 7-1/2 horsepower or larger shall also be supplied with 240 volt ac single phase, 50 hertz space heaters located in the motor. Motor space heater leads shall be terminated in the limit switch compartment. Motor operator enclosures shall be equipped with Crouse-Hinds Type ECD combination water drain-breather plugs or acceptable equal.

Each motor operator shall have four rotary drum limit switches, each capable of being set to trip at any point between fully open and fully closed valve positions. Each rotary drum limit switch shall have two normally open and two normally closed contacts. Double torque limit switches for the motor operator shall be provided to limit opening and closing thrust.

Control circuits will operate on 240 volts ac single phase. Push-button stations or reversing starters shall not be furnished with motor operator units.

The motor operator limit switches and torque switches shall be wired in accordance with the 4 Train Geared Limit Switch Contact Development included as part of this subsection of these specifications.

A handwheel and position indicator shall be provided for manual operation of each valve. Provisions shall be made for manual engagement of the handwheel at any time except when the motor is energized, during which time the handwheel shall be automatically disengaged.

Motor operators shall be designed for installation in any position without lubricant leakage or other operating difficulties.

	LIMIT SWITCHES			
	CONTACT	FULL OPEN	INTERMED	FULL CLOSE
ROTOR 1	1	X		
	2	X		
	3		X	X
	4		X	X
ROTOR 2	5			X
	6			X
	7	X	X	
	8	X	X	
ROTOR 3	9	X		
	10	X		
	11		X	X
	12		X	X
ROTOR 4	13			X
	14			X
	15	X	X	
	16	X	X	
	17	CLOSE TORQUE SW.		
	18	OPEN TORQUE SW.		

BLACK & VEATCH INTERNATIONAL
CONSULTING ENGINEERS
KANSAS CITY, MO.

4 TRAIN GEARED LIMIT SWITCH CONTACT DEVELOPMENT

1D3-3

Subsection 1D4 - DIRECT CURRENT MOTORS

1D4.1 GENERAL. In addition to the applicable requirements of the specifications for integral horsepower ac induction motors, dc motors shall conform to the following requirements.

1D4.2 NAMEPLATE STANDARD. In addition to NEMA MG 1-10 standard requirements, the following nameplate data shall be provided:

Serial number
Shop order number
Frame number
Insulation system class designation
Service factor

1D4.3 RATING. All dc motors shall be designed for continuous operation on an ungrounded station battery. The station battery will float on trickle charge at 258 volts.

The Contractor shall guarantee satisfactory operation of all dc motors when continuously energized in accordance with the following schedule:

Specified Nominal Voltage	Guaranteed Satisfactory Voltage Operating Range
250	190 to 270

1D4.4 SERVICE FACTOR. The service factor for dc motors shall be 1.0 for fractional horsepower motors and 1.15 for integral horsepower motors when operating at base speed unless specified otherwise.

1D4.5 INSULATION. The temperature rise of dc motors shall be in accordance with NEMA MG 1-12 and MG 1-23 for the insulation system class and ambient temperature specified.

Shunt field coils shall be wound on nonhygroscopic bobbins, impregnated, and baked. Coils shall be interchangeable.

Interpole coils shall be wound over nonhygroscopic insulation on interpole bodies, impregnated, and baked. The complete wound interpole assembly shall be interchangeable.

The area back of the armature commutator risers shall be packed with an epoxy compound and cured.

1D.4.6 BEARINGS. In addition to the requirements of the subsection of these specifications "INTEGRAL HORSEPOWER AC MOTORS", bearings for fractional horsepower motors shall be designed to operate in any position or angle. One-piece sleeve bearings with wick lubrication shall be furnished where available. Ball bearings shall be furnished where sleeve bearings are not available and where axial thrust loads exceed 20 pounds.

1D4.7 ROTORS. All rotors shall be adequately sized to avoid overheating during acceleration of the motor and driven equipment. They shall be keyed or otherwise securely mounted on the motor shaft and shall be dynamically balanced.

The coil ends of dc motors shall be securely held in position with non-conducting banding material.

Commutator bars shall be fabricated of silver bearing copper, free of cracks, pits, slivers, and similar imperfections. Bars shall be insulated with mica segments, assembled and seasoned as a unit, properly undercut, and securely mounted on the shaft. Coil end connections to the risers shall be soldered with pure tin solder or brazed.

Brush holders shall be fabricated of nonferrous materials and located securely and accurately to position the brushes on the armature. Brush holder pockets shall be sized to permit proper movement of the brushes. Means for adjusting brush pressures and brush assembly ring shall be provided. A stop device shall be furnished to prevent the brush terminal from scoring the commutator as the brush wears.

Brushes shall be carbon type and shall be furnished with insulated shunts sized for the rated brush current.

Successful commutation in accordance with NEMA standards shall be maintained over the load range encountered in service and over the guaranteed operating voltage range.

Openings shall be provided for inspection, pressure adjustment and replacement of brushes, and for brush assembly ring adjustment.

1D4.8 SHAFTS. Shafts of fractional horsepower motors shall be furnished with corrosion resistant treatment unless a corrosion resistant material is specified.

1D4.9 ENCLOSURES. Enclosures shall be in accordance with the requirements of the subsection of these specifications "INTEGRAL HORSEPOWER AC MOTORS, 600 VOLTS AND BELOW".

1D4.10 TORQUE CHARACTERISTICS. Performance characteristics of dc motors shall be in accordance with NEMA MG 1 requirements.

1D4.11 FACTORY TESTS. Each motor shall be tested at the manufacturer's factory to determine that it is free from electrical or mechanical defects and to provide assurance that it meets the requirements of these specifications.

Test procedures shall be in accordance with IEEE No. 113 Test Code for Direct Current Machines.

Five copies of test reports of each integral horsepower motor rated above 100 horsepower shall be sent to the Engineer prior to shipment of the motor from the manufacturer's factory. Test report data shall include the following in addition to other requirements of these specifications:

Final value of motor axial and radial vibration
Length of time and final temperature rise of bearing test
Final value of motor noise level

1D4.11.1 Routine Tests. Routine tests shall be made on each motor in accordance with the requirements of NEMA MG 1. The tests shall include:

High-potential dielectric test
Measurement of resistance of all windings
Inspection of bearings and bearing lubrication system
No-load running armature current, shunt field current, speed in revolutions per minute, and motor terminal voltage with rated voltage applied
Full-load armature current, shunt field current speed in revolutions per minute and motor terminal voltage with rated voltage applied
Observation of commutation while full-load current readings are taken
Stability test at highest rated load and at 10 per cent above highest rated speed
Observation of speed stability when load is suddenly applied and removed

1D4.12 MANUFACTURERS. Motors shall be as manufactured by Allis-Chalmers, General Electric, Louis Allis, Reliance, or Westinghouse.

PART 2 - EQUIPMENT REQUIREMENTS

TABLE OF CONTENTS

		Page
Section 2A - DESIGN AND PERFORMANCE CRITERIA		2A-1 through 2A-8
2A.1	General	2A-1
2A.2	Codes and Standards	2A-1
2A.3	Design Conditions	2A-1
2A.4	Performance Criteria	2A-4
2A.5	Performance Tests	2A-7
Section 2B - TURBINE		2B-1 through 2B-10
2B.1	General	2B-1
2B.2	Type	2B-1
2B.3	Extraction Openings	2B-1
2B.4	Exhaust Opening	2B-1
2B.5	Emergency Stop Valve	2B-1
2B.6	Hand Throttle	2B-1
2B.7	Governing System	2B-1
2B.8	Overspeed Governor	2B-2
2B.9	Load Limit	2B-2
2B.10	Initial Pressure Regulator	2B-2
2B.11	Oil System	2B-2
2B.12	Emergency Trip Device	2B-3
2B.13	Control Valve Position Switches	2B-4
2B.14	Overspeed	2B-4
2B.15	Turning Gear	2B-4
2B.16	Drains	2B-4
2B.17	Gland Seals	2B-4
2B.18	Relief Diaphragms	2B-4
2B.19	Thrust Bearing Failure Alarm	2B-4
2B.20	Vacuum Alarm Switches	2B-4
2B.21	Vacuum Breaker	2B-5
2B.22	Water Spray System	2B-5
2B.23	Lagging	2B-5
2B.24	Heat Insulation	2B-5
2B.25	Turbine Supervisory Instruments	2B-5
2B.26	Piping and Valves	2B-6
2B.27	Temporary Connections	2B-8
2B.28	Instrument Connections	2B-8
2B.29	Temperature Detectors	2B-8
2B.30	Operating Instruments	2B-9
2B.31	Direct Mounted Thermometers	2B-9
2B.32	Escutcheon Rings	2B-9
2B.33	Motors	2B-9
2B.34	Electrical Connections	2B-10

		Page
Section 2C - GENERATOR		2C-1 through 2C-5
2C.1	General	2C-1
2C.2	Type	2C-1
2C.3	Terminals	2C-1
2C.4	Insulation	2C-1
2C.5	Telephone Influence Factor	2C-1
2C.6	Generator Voltage Wave Shape	2C-1
2C.7	Short Circuit Requirements	2C-1
2C.8	Temperature	2C-1
2C.9	Temperature Detectors	2C-2
2C.10	Voltage Regulation	2C-2
2C.11	Voltage Variation	2C-2
2C.12	Generator Terminal Accessories	2C-2
2C.13	Tachometer Generator	2C-2
2C.14	Generator Cooling	2C-3
2C.15	Hydrogen Seal and Control Apparatus	2C-3
2C.16	Electrical Connections	2C-4
		2C-5
Section 2D - EXCITATION SYSTEM		2D-1 through 2D-7
2D.1	General	2D-1
2D.2	Rotary Excitation System	2D-1
2D.3	Brushless Excitation System	2D-3
2D.4	Static Excitation System	2D-5
Section 2E - LUBE OIL CONDITIONER		2E-1 through 2E-3
2E.1	General	2E-1
2E.2	Type	2E-1
2E.3	Design Conditions	2E-1
2E.4	Circulating Pump	2E-1
2E.5	Ventilating Fan	2E-1
2E.6	Polishing Filter	2E-2
2E.7	Painting	2E-2
2E.8	Overflow Fitting	2E-2
2E.9	Level Switches	2E-2
2E.10	Access Doors	2E-2
2E.11	Spare Filters	2E-2
2E.12	Wiring	2E-2
2E.13	Piping	2E-3
2E.14	Relief Valve	2E-3
2E.15	Drip Pan	2E-3
2E.16	Motors	2E-3

		Page
Section 2F - HYDROGEN GENERATION EQUIPMENT		2F-1 through 2F-3
2F.1	General	2F-1
2F.2	Type	2F-1
2F.3	Design Conditions	2F-1
2F.4	Operation	2F-1
2F.5	Conversion Equipment	2F-2
2F.6	Compressors	2F-2
2F.7	Gas Drying	2F-2
2F.8	Analyzers	2F-2
2F.9	Operating Materials	2F-2
2F.10	Piping and Wiring	2F-2
2F.11	Cleanliness	2F-2
2F.12	Hydrogen Storage Tank	2F-2

Section 2A - DESIGN AND PERFORMANCE CRITERIA

2A.1 GENERAL. These specifications cover the design, performance, and construction requirements for the turbine generator units and auxiliaries. This section stipulates the major design and performance criteria which shall apply for each turbine generator unit.

2A.2 CODES AND STANDARDS. The design and construction of the turbine generator and accessory equipment shall conform with all state and local regulations, and with the Code for Pressure Piping - ANSI B31.1, ASME Boiler and Pressure Vessel Code, NEMA, IEEE, ANSI, EEI, HEI, and the laws and regulations of the Government of the Republic of Indonesia. Any conflict between standards shall be referred to the Engineer who will determine the standard which will govern.

2A.3 DESIGN CONDITIONS. The turbine generator unit shall satisfy the following requirements while operating under the indicated conditions.

2A.3.1 Normal Operating Conditions. The turbine, generator, and accessory equipment shall be designed for operation under the following conditions and shall satisfy all of the requirements specified.

Turbine

Output, nominal kW at generator terminals	50,000
Throttle steam pressure, psi	1,250
Throttle steam temperature, F	950
Turbine exhaust pressure, in. Hg abs	3.5
Number of extraction stages in service for feedwater heating	5
Extraction steam flow for combustion air heating, per cent of throttle flow	3
Makeup, per cent	3
Speed, rpm	3,000

Generator

Rating, minimum nominal kVA at 30 psi H_2	62,500

Generator output voltage, kV nominal	11.5
Generator output electrical characteristics	3 phase - 50 hertz
* Power factor, per cent	~~80~~ 85
Short circuit ratio	0.58 (minimum)

2A.3.2 Maximum Capability of Unit. The turbine generator unit, including the turbine, generator, excitation system, and related auxiliary equipment shall be guaranteed to operate safely, reliably, and without undue maintenance under the following conditions:

Position of governor inlet valves	All valves wide open
Throttle steam pressure, psi	1,313
Throttle steam temperature, F	950
Turbine exhaust pressure, in. Hg abs	0.5 to 3.5
Extraction feedwater heaters in service	5
Feedwater makeup to system, per cent	0
Extraction steam flow for combustion air heating, per cent	0
Power factor, not in excess of, per cent	90

2A.3.3 Accessory Equipment. Turbine generator accessory equipment shall be designed in accordance with the following:

Hydrogen coolers

Source of water to coolers	Closed cooling system
Temperature of water to coolers, F	95
Tube material	Inhibited admiralty
Tube sheet material	Muntz metal
Channel and cover material	Steel
Design pressure of water side, psi	150

* Revised in accordance with Basis of Contract Award

Maximum permissible water side friction loss, ft	7
Oil coolers	
Source of water to coolers	Closed cooling system
Temperature of water to coolers, F	95
Tube material	Inhibited admiralty
Tube sheet material	Muntz metal
Channel and cover material	Steel
Design pressure of water side, psi	150
Maximum permissible water side friction loss, ft	5
Excitation system voltage	250

* ~~Alternator-exciter cooling air heat exchanger~~

Source of water to heat exchanger	Auxiliary cooling water (treated condensate)
Temperature of water to heat exchanger, F	95
Tube material	Inhibited admiralty
Tube sheet material	Muntz metal
Channel and cover material	Steel
Design pressure of cooling water side, psi	150
Maximum permissible water side friction loss, ft	7

2A.3.4 Minimum Load Operation. The turbine generator unit shall be guaranteed to operate satisfactorily without structural damage to the unit at the following load conditions:

At the load condition necessary to operate the system auxiliaries only after loss of export load and until the load is resumed

At 10 per cent of the nominal rated load for extended periods of time

* Deleted in accordance with Item 9 of Addendum 2

2A.3.5 Load Change Operation. The turbine generator unit shall be guaranteed to operate satisfactorily and without structural damage to the unit in daily load swings from 10 per cent of the nominal rated capacity to the maximum capability of the unit at a rate of load change as stated by the Contractor on Page D-4 of the Proposal Data section of these specifications.

2A.4 PERFORMANCE CRITERIA. Full performance data on the unit shall be submitted as requested herein, based on the cycle conditions stated in this section.

2A.4.1 Cycle Arrangement. The turbine generator shall be designed for operation with five stages of feedwater heating, using heaters capable of the approach temperatures indicated on the following tabulation:

	Outlet feedwater approach to the heater shell saturation temperature, F	Outlet drains approach to the inlet feedwater temperature, F
LP Heater 1	5	10
LP Heater 2	5	10
Deaerator 3	0	0
HP Heater 4	5	10
HP Heater 5	5	10

Drains from all heaters will be cascaded, with the drains from Heater 4 going to the deaerator and drains from Heater 1 going to the condenser. Alternate paths will be provided for low load operation.

The condensate shall pass through the auxiliary equipment in the following order: Heater 1, Heater 2, Deaerator 3, BF Pump, Heater 4, and Heater 5.

Hydrogen coolers and oil coolers will be on a separate closed auxiliary cooling water system.

At times, approximately two per cent of the throttle steam flow will be taken from the extraction to Heater 2 or Deaerator 3 for desalination purposes, but this condition shall not be taken into account in the performance heat balances.

2A.4.2 Heat Balance Criteria. All heat balances shall be based on the criteria stated herein.

All guaranteed heat rates shall be "net" heat rates based on a "locus of the valve points" performance calculated as follows:

$$\text{Heat Rate} = \frac{Qt\ (Ht-Hf) - Qa\ (Ha-Hd)}{Kwg-Kwp}$$

Qt = Throttle steam flow, lb per hr

Ht = Throttle steam enthalpy, Btu per lb

Qa = Air heating steam flow, lb per hr

Hf = Compressed final feedwater enthalpy

Ha = Air heating steam enthalpy, Btu per lb

Hd = Air heating drips enthalpy, Btu per lb

Kwg = Power delivered at generator terminals, kW

Kwp = BF pump power

The guaranteed heat rate and all performance heat balances shall cover all gland losses and steam leakage in the turbine and stop valve, as well as friction, windage, ventilation losses, power to the exciter, excitation system control losses, and losses from connections between the exciter and generator. The guaranteed heat rate shall be such as can actually be made in everyday operation. No adjustments shall be made to the machine which cannot be used in practical operation after the test has been completed.

For the purpose of heat balance calculations, the following assumptions shall apply:

The boiler feed pump suction conditions shall be the temperature and pressure of the deaerator. Boiler feed pump discharge head shall be 125 per cent of turbine throttle pressure. Pump efficiency shall be 75 per cent. The overall boiler feed pump driver efficiency including line losses shall be 93 per cent.

The pressure drop between the turbine extraction openings and the feedwater heater shells shall be assumed as 5 per cent of the extraction pressure.

The steam flow for combustion air heating shall be taken from the deaerator extraction point. Drips from the combustion air heating system will be returned to the deaerator at deaerator saturation temperature.

The turbine exhaust pressure shall be as specified and the condensate temperature shall be the saturation temperature at that pressure.

Condensate makeup shall be considered as zero.

The heat balances shall include temperature rises due to the boiler feed pump, extraction heaters, and air ejector.

Heat balance diagrams shall indicate the pressures, temperatures, enthalpies, and flow quantities of throttle steam, extraction steam, exhaust steam, sealing steam, and leakoff steam. Also, the temperatures, enthalpies, and flow quantities of feedwater and heater drains shall be indicated.

The Contractor shall submit to the Engineer within 30 days after award of contract, final corrected heat balances based upon the operating conditions and cycle arrangements as finally established by the Engineer.

In addition to the heat balances specified to be furnished with the Proposal, the Contractor shall furnish one heat balance at each of the full open governor points.

2A.4.3 Heat Balances. Five heat balances to show the performance of the unit shall be submitted. These conditions are identified as A, B, C, D, and E. The heat balances shall be based on the cycle arrangement and heat balances shall show generator output. Additional heat balances shall be furnished by the Contractor as required by the Engineer.

	Conditions				
	A	B	C	D	E
Output at generator terminal, mW	12.5	25	37.5	*	**
Throttle steam pressure, psi	1,250	1,250	1,250	1,250	1,313

* This load shall be the guaranteed output which shall be produced by the turbine measured at the generator terminals less the power requirements of excitation equipment connected external of the generator terminals and shall be stated in the Proposal Data section of these specifications.

** This shall be the expected maximum output at the stated conditions and shall be stated in the Proposal Data section of these specifications.

If the manufacturer's equipment cannot meet these values, the heat balances furnished shall clearly state the capacities proposed.

	Conditions				
	A	B	C	D	E
Throttle steam temperature, F	950	950	950	950	950
Turbine exhaust pressure, in. Hg abs	2.0	2.0	2.0	2.5	3.0
Feedwater heaters in service	5	5	5	5	5
Extraction steam flow for combustion air heating, per cent	3	3	3	3	0
Hydrogen pressure, psi	15	15	15	15	30
Generator power factor, per cent	80	80	80	80	90

The Contractor guarantees that the heat rates and kW output data shown on each of the four heat balances specified above covering Conditions A, B, C, and D will be obtained under normal "commercially clean" conditions.

Nameplate data shall be in accordance with the actual design conditions and shall be acceptable to the Engineer.

2A.5 PERFORMANCE TESTS. The Owner will install a full set of operating instruments, gages, and flowmeters for normal operation of the unit. The Owner will conduct an acceptance test using this equipment and such test shall be binding on the parties to this Contract to determine compliance with heat rate guarantees and conformance to the stated heat balance conditions. It shall be construed that the unit has met its guaranteed efficiency if the actual test heat rate obtained during such a test is
* not more than 101 per cent of the guaranteed heat rate.
104

As a part of the provisions for making the test, the Owner will calibrate all pressure and temperature measuring devices insofar as practical, and will take accout of unmeasured quantities in a reasonable manner. The general method outlined in the ASME test codes will be used as a guide for all procedures; however, code technicalities shall not invalidate the test.

The tests will be conducted at approximately the guaranteed heat balance load and as near the specified cycle conditions as practical. The Engineer will make proper corrections in the calculations to take account of conditions which do not correspond to the specified cycle.

* Revised for Contract

Should the turbine generator unit fail to meet the guaranteed efficiency, the Contractor shall modify the unit as required until the unit meets its efficiency guarantee. All costs for modifications, including labor, materials and the cost of additional testing to prove that the unit meets its efficiency guarantee shall be borne by the Contractor.

Should the acceptance tests specified show that the unit has failed to meet its efficiency guarantee, the Contractor may perform formal efficiency tests in accordance with the ASME Power Test Code at his option under the following conditions:

1. The Owner is permitted to witness the tests and is furnished a copy of all test data.

2. The Contractor shall furnish and install all special instruments required to perform the tests.

3. Such tests shall be arranged mutually as to time and circumstances so as not to disrupt the Owner's operation.

4. Costs of performing the tests shall be mutually agreed to by the Contractor and Owner before performing the tests.

5. Should the tests show that the unit meets its efficiency guarantee the Owner will pay the costs of performing the tests.

6. Should the tests show that the unit fails to meet its efficiency and capacity guarantees, the Contractor shall pay the costs of performing the tests and shall immediately proceed with modification of the unit until the unit meets its efficiency guarantee. All costs for the modifications including labor and material and the cost of performing additional formal tests in accordance with the ASME Power Test Code to prove that the unit will meet its efficiency guarantee shall be borne by the Contractor.

* ** 7. In the event that the unit cannot be modified to meet the efficiency or capability guarantees, or after modification is still incapable of meeting the capability or efficiency guarantees, the Contractor shall be assessed the following amounts as penalties and such amounts shall be deducted from the contract price:

   a. For a deficiency in capability under Condition D, the amount of $300.00 per kilowatt deficiency below the guaranteed capability.

   b. For failure to meet the guaranteed efficiency, the amount of $750.00 per Btu deficiency. The Btu deficiency shall be the sum of the deficiencies at Conditions C and D divided by 2.

* Refer to Item 16 of Addendum 1 and Item 5 of Addendum 4
** Refer to Item 10 of Addendum 3

Section 2B - TURBINE

2B.1 GENERAL. This section covers the construction requirements for each turbine and related equipment.

2B.2 TYPE. The turbine generator shall be a single shaft, 3000 rpm, axial flow, uncontrolled extraction condensing unit. Steam bypasses around any stage shall not be used.

The unit will be installed indoors.

2B.3 EXTRACTION OPENINGS. The size of extraction openings and pressures available shall be those normally obtained with a unit of this size to meet the specified operating conditions. All extraction nozzles shall be designed for welding connections. Welding ends shall be machined to match the Engineer's standard welding details.

2B.4 EXHAUST OPENING. The turbine exhaust opening shall be located below the turbine, opening downward and designed for a strength welding connection, without the use of flanged or bolted components.

2B.5 EMERGENCY STOP VALVE. An emergency stop valve shall be provided which will shut off the steam to the turbine. The stop valve shall be equipped with both coarse and fine strainers. The valve hydraulic control system shall include hand trip and automatic trip devices which shall be actuated by overspeed and the emergency trip device. Two dpdt full open and four dpdt full closed position limit switches shall be provided for interlocking and indicating position of the stop valve. The valve shall be designed to withstand 1-1/2 times the maximum throttle pressure and shall be in accordance with all requirements of the ASME Boiler and Pressure Vessel Code for a prime mover trip throttle valve for a unit installation.

2B.6 HAND THROTTLE. A hand operated steam inlet throttling mechanism shall be provided. Provision may be made in the emergency stop valve for manual operation or, as an alternate, manual operation of the inlet valves may be provided. In either case, the operating handwheel shall be located so as to be easily accessible at the steam end of the turbine on the operating floor level.

2B.7 GOVERNING SYSTEM. The turbine shall be provided with a complete hydraulic governing system which will control the turbine speed before synchronism, control the turbine load, and prevent turbine overspeeding. Complete descriptive information about the governing system shall be submitted with the Proposal.

The governing mechanism shall be provided with an electric motor driven adjustment for regulating the speed from a remote location. Speed shall be adjustable to 5 per cent above and 5 per cent below synchronous speed. The motor shall be universal, split field, series type designed for operation at 250 volts dc.

A hand operated speed changer shall be provided which will have a range of plus or minus 5 per cent of synchronous speed.

The emergency stop valve shall be provided with a means for testing the action of the automatic trip mechanisms while the turbine is in operation.

2B.8 OVERSPEED GOVERNOR. In addition to the automatic speed governor, a separate emergency overspeed governor shall be provided. This governor shall operate through a hydraulic system to close the emergency stop valve. The speed at which the overspeed governor will operate shall be adjustable and will be set to trip at 10 per cent above normal synchronous speed.

* An emergency governor exerciser shall be furnished to permit testing of the overspeed governor without tripping the unit. It shall be complete with control switch and indicating lights mounted on the turbine front standard.

2B.9 LOAD LIMIT. A hand operated load limit device shall be provided which can be adjusted to limit the output of the turbine. The device shall be integrated into the governing control circuit in such a way that the opening of the governing valves can be restricted with the result that the maximum output of the generator can be set at any desired value.

2B.10 INITIAL PRESSURE REGULATOR. An initial pressure regulator shall be furnished. The regulator shall be equipped with a hand adjustment wheel by which the steam inlet pressure to be maintained can be adjusted. A shutoff valve shall be provided in the regulator control circuit so that the regulator can be made inoperative during startup.

2B.11 OIL SYSTEM. A complete lubricating and hydraulic oil system shall be furnished for the turbine, generator, and exciter. It shall be complete with main and auxiliary oil pumps, reservoir, strainers, twin oil coolers, pressure gages, pressure switches, regulating valves. and all oil piping required. The generator seal oil system shall be as specified in Section 2C.

The main oil pump shall be turbine shaft driven. An ac motor driven main auxiliary oil pump with capacity for the lubricating oil, seal oil, and hydraulic systems shall be furnished. An ac motor driven bearing and seal oil pump with capacity to handle lubricating and seal oil requirements when the unit is on turning gear shall be furnished. A dc motor driven oil pump with capacity to prevent turbine generator bearing damage during emergency shutdown shall be furnished. All motor driven oil pumps shall be mounted on the turbine oil reservoir. Each oil pump shall be provided with a suction strainer.

* Refer to Basis of Contract Award

The ac motor starting controls will be furnished under separate specifications. The dc motor starter and integral control equipment shall be furnished under these specifications.

Pressure switches for automatic sequential starting of the motor driven oil pumps shall be provided. Additional pressure sensing switches shall be provided to indicate operation of the motor driven oil pumps and alarming low oil pressure.

The oil reservoir shall be furnished complete with level indicator, high and low level alarm switches, strainers, drain, overflow, manhole, mountings for the auxiliary oil pumps, vapor extractor, valves, and piping. The reservoir shall be separately mounted. The exact location will be determined later by the Engineer.

A centrifugal or baffled separator shall be provided in the vapor extractor vent system within the reservoir which shall effectively eliminate oil carryover.

Oil coolers shall be of the straight or "U" tube type and shall be supported from the turbine oil reservoir. Access shall be from the top only. Each oil cooler shall have sufficient capacity to cool the entire oil supply to the machine when supplied with cooling water as specified under Section 2A. The oil piping to and from the oil coolers shall include a double three-way valve to switch the oil flow from one cooler to the other. A single hand-wheel shall position both valves simultaneously.

One oil operated air pilot dump valve for operation of the Owner's extraction check valves shall be furnished with the turbine generator unit. The valve shall be complete with all necessary oil piping. An additional air dump valve operated from the turbine speed control shall be furnished for
* operating ~~all~~ the extraction check valves

Each turbine generator shaft bearing shall be provided with an illuminated sight flow indicator and direct mounted thermometer. Each thermometer shall be provided with a stainless steel separable socket.

Each turbine generator shall be provided with a lube oil conditioner in a continuous bypass system. The purifier shall be in accordance with Section 2E of these specifications.

All lubricating, hydraulic, and seal oil piping required for the complete system shall be furnished in accordance with the requirements given under PIPING.

2B.12 EMERGENCY TRIP DEVICE. A de-energize-to-trip emergency trip device with manual reset and a 250 volt dc solenoid trip coil for use with a remote turbine trip switch shall be provided. The solenoid shall be normally energized. A low oil pressure switch, thrust bearing failure switches, and low vacuum trip and reset devices shall be provided for automatic control of the emergency trip device.

* Revised in accordance with Item 10 of Addendum 2

2B.13 CONTROL VALVE POSITION SWITCHES. Three dpdt limit switches shall be provided on the control valve gear for indication of the closed position of the control valves.

2B.14 OVERSPEED. The turbine generator unit shall be designed to withstand the stresses due to an overspeed of 20 per cent above normal synchronous speed.

2B.15 TURNING GEAR. An ac motor operated rotor turning gear shall be provided. All necessary accessories shall be included. All necessary pressure switches or other interlocks required to prevent operation of the turning gear if lubricating oil pressure drops below a safe level shall be provided. Housings and safety guards shall be provided for all moving parts of the turning gear. All electrical devices associated with the turning gear shall be wired to turbine junction box terminals for field cable connections. Limit switches shall be provided on the turning gear clutch for remote indication. A hand crank shall be provided to permit manual rotation of the rotor.

2B.16 DRAINS. Means for draining condensate from the turbine casing shall be provided. This may be accomplished either by internal openings through the diaphragms or by external drain connections. External drain valves which must be opened during turbine startup shall be equipped with ac motor operators.

2B.17 GLAND SEALS. The turbine glands shall use steam for the sealing media. Means shall be provided for automatically controlling the steam pressure to the gland seals over the entire load range.

Gland steam removal equipment and other necessary auxiliary equipment including safety valves shall be furnished for operation of the gland sealing system. The gland steam removal equipment shall be designed so that failure of gland steam vacuum pumps or exhausters will not necessitate shutdown of the turbine generator unit. Duplicate pumps and exhausters shall be furnished when necessary to accomplish this purpose.

The steam seal regulator shall be mounted on a solid support. All valves associated with the steam seal system shall be conveniently accessible from the operating floor. A local mounted pressure gage shall be provided at the regulator.

2B.18 RELIEF DIAPHRAGMS. Atmospheric relief diaphragms shall be provided in the exhaust hood of the turbine.

2B.19 THRUST BEARING FAILURE ALARM. Switches shall be provided for annunciating an impending failure of the turbine thrust bearing. Additional switches shall be provided for alarm and trip of thrust bearing failure.

2B.20 VACUUM ALARM SWITCHES. The Contractor shall provide a low vacuum trip alarm switch which will indicate a pending low vacuum trip and a switch that indicates the low vacuum trip mechanism has tripped.

2B.21 VACUUM BREAKER. The turbine shall be provided with a hand operated vacuum breaker located within the turbine lagging. The vacuum breaker valve shall be easily operable from the turbine operating floor level and shall be provided with a water seal reservoir for testing the tightness of the valve.

2B.22 WATER SPRAY SYSTEM. If required for safe operation the unit shall be provided with a turbine exhaust water spray system. The system shall be provided complete with spray nozzles,, a controller, an automatic air operated spray water control valve, and all interconnecting piping between the nozzles and the spray water control valve.

2B.23 LAGGING. Welded steel plate lagging, with sound deadening insulation, factory fabricated ready for field installation, shall be furnished for the turbine generator. Lagging shall be arranged for easy removal where removal is required for making inspection and repair of the unit and shall be adequately ventilated. Lagging shall extend beyond any opening within the turbine generator foundation.

2B.24 HEAT INSULATION. The turbine shall be provided with heat insulation materials for covering the hot surfaces of the turbine casing and piping including the main steam stop valve and steam lead between the stop valve and turbine. The shell of the turbine shall be insulated with standard insulating blocks and plastic. All horizontal joints of the turbine shell shall be covered with an easily removable blanket type insulation. Block and molded segmental type pipe insulation shall be of an asbestos free calcium silicate insulating material.

Hot surfaces of valves and piping provided with the turbine generator but not included within the turbine lagging shall be insulated with asbestos free calcium silicate insulating material and shall be covered with aluminum jackets.

Aluminum jacket material shall be ASTM B209 Alclad 3004, or acceptable equal. All aluminum jacket material shall be smooth sheet plain finished and shall have a minimum thickness of 0.020 inches for jackets used on piping having insulated outside diameters of 13 inches or smaller and a minimum thickness of 0.024 inches for jackets on piping having insulated diameters larger than 13 inches.

2B.25 TURBINE SUPERVISORY INSTRUMENTS. Turbine supervisory instruments, for indicating and recording speed, valve position, shaft eccentricity, and shaft vibration, complete with control switches and appurtenances, suitable for flush mounting on a panelboard shall be furnished. The instruments shall be covered with "no-glare" glass fronts.

The instruments shall be furnished complete with primary detectors, transmitters, receiver gages, alarm contacts, chart drives, switches and other accessories required for a complete installation. Chart drives shall be suitable for operation on 240 volt ac, 50 cycle service.

The shaft vibration recorder shall be furnished with a pickup detector for each bearing.

The recorders will be mounted on a panel furnished by the Owner for installation in the control room.

2B.26 PIPING AND VALVES. All valves, piping, and supports shall be in accordance with the following.

2B.26.1 Piping. The turbine generator unit shall be provided with a complete system of piping integral to or between any equipment specified herein, including oil piping as required to interconnect the turbine oil reservoir, machine bearings, pumps, and all hydraulic devices provided with the turbine generator; gland seal system piping; generator seal oil and gas piping; and all other miscellaneous piping required.

All piping materials shall be constructed from steel. All pipe shall have properties at least equivalent to seamless ASTM A53 material. Piping wall thickness shall be not less than Schedule 40.

All oil piping shall be guarded to the maximum extent possible.

The interior of all piping 2-1/2 inches and larger shall be cleaned after shop fabrication. All oil piping shall be thoroughly cleaned, flushed, and coated with an oil soluble preservative. The interior of all pipe 2 inches and smaller which will be field fabricated shall be cleaned prior to shipment. The interior of this piping shall be protected from entry of dirt during shipment and storage by fitting each opening with a heavy, tight fitting wooden plug. The plugs shall also be designed to protect the exposed piping ends from damage.

The interior of all random length pipe and loose fittings shall be thoroughly cleaned and protected from entry of dirt during shipment and storage by fitting each opening with a heavy, tight fitting wooden plug.

All piping 2-1/2 inches and larger, except the oil guard line, shall be constructed with butt welded joints and butt welding valves and fittings. All piping 2 inches and smaller shall be constructed with socket welding valves and fittings. Fittings such as elbows, tees, reducers, crosses, and caps shall be used for all changes in piping direction, intersections of piping, piping size changes, and end closures except as otherwise accepted by the Engineer. All piping 2-1/2 inches and larger shall be shop fabricated and accurately fitted to assure that the piping can be installed in the field without trimming. Piping ends for field welding shall be machine beveled.

All piping shall be routed so as to be within the confines of the turbine foundation whenever possible. Drawings showing the routing of all piping furnished with the turbine generator unit shall be prepared by the Contractor and submitted to the Engineer. The drawings shall contain all information required to install and support the turbine generator piping. All routing of Contractor-furnished piping shall be subject to the Engineer's concurrence.

The exterior of all shop fabricated piping shall be thoroughly cleaned with solvents and wire brushing and given one coat of a rust inhibitive metal primer paint. Each section of piping shall be given a painted identification mark which will determine its intended location on a piping layout diagram to be prepared by the Contractor.

All piping connections for attachment to the Owner's piping or equipment shall have ends prepared as directed by the Engineer.

2B.26.2 Piping Support. All hangers and accessories to support the main steam stop valve and all main steam piping between the stop valve and the turbine inlet shall be provided.

The types of pipe hanger hardware which shall be provided are listed as follows:

Pipe clamps	Grinnell No. 212, 216, or 295
Hanger rods	1/2 inch dia minimum size. Use Grinnell No. 278 eye rods and Grinnell No. 230 turnbuckles
Hanger attachments	Grinnell 262 or 263 wrought clip or Grinnell hanger Standard No. 55 welding type, lug or acceptable equal

The Contractor shall furnish a listing of all other hangers and other accessories required to make up a complete system of supports for all piping furnished by him.

2B.26.3 Valves. All valves used in the oil piping systems, hydrogen system, purge system, turbine drain valves, and other valves shall be of a type and manufacture acceptable to the Engineer.

Motor operated valves shall be furnished in accordance with the manufacturer's standard. Operators shall be "Limitorque" and shall be as specified in Section 1D of these specifications.

All miscellaneous drain, control, and instrument shutoff valves as an accessory to the main steam piping to the steam chest including the main throttle valves shall be double valved and furnished in accordance with the requirements of the ASME Boiler Code.

2B.27 TEMPORARY CONNECTIONS. The Contractor shall provide all flanged cover plates and closures for attaching temporary steam blowout piping to be used in cleaning the main steam piping prior to starting the turbine generator unit.

Temporary connections shall be designed for 600 psi service.

2B.28 INSTRUMENT CONNECTIONS. Connections shall be provided in the turbine generator unit and its associated piping for connection of Owner-furnished instruments.

Provision shall be made for attachment of pressure gages, thermocouple wells and pressure and temperature switches. Connections will be required for, but not limited to, the following:

Oil temperature from turbine, generator, and exciter bearings

Oil temperature to and from oil coolers

Seal oil temperature to and from generator

Hydrogen outlet temperature from hydrogen coolers (common cold gas)

First stage pressure

Turbine exhaust temperature

Air discharge temperature from exciter

Gas temperature to and from hydrogen coolers

2B.29 TEMPERATURE DETECTORS. A system of temperature detectors shall be provided for the turbine. The temperature detectors shall be complete with wells, terminal boxes, and interconnecting wiring between the temperature detectors and the terminal boxes.

One thermocouple detector for each shaft bearing oil discharge and two for the thrust bearing metal shall be furnished.

Thermocouples shall be provided on the oil inlet and outlet of the oil coolers.

One set of not less than four thermocouples for measurement of turbine metal temperatures shall be furnished for connection to a temperature recorder to be furnished by the Owner. Thermocouples shall be in accordance with Section 1B of these specifications.

2B.30 OPERATING INSTRUMENTS. Instruments and devices which shall be furnished and mounted on the turbine front standard shall include, but shall not necessarily be limited to, the following:

Pressure gages for

High pressure oil

Bearing oil high pressure

Thrust bearing drain

No. 1 bearing drain

Seven sets of two indicating lights each to indicate position status of Owner's extraction check valves

Dial type electric tachometer mounted in the front standard plus a transmitting device and receiver for remote panel mounted location

One kW load indicator shall be furnished for remote mounting.

All gage dials shall be calibrated in metric and English units.

2B.31 DIRECT MOUNTED THERMOMETERS. The Contractor shall provide dial type thermometers complete with stainless steel separable sockets for indication of the following:

Gland seal vacuum pump discharge temperature

Lubricating oil supply temperature

Lubricating oil bearing return temperatures from each shaft bearing and thrust bearing

* Exhaust hood temperature (surface mounted on each side of the exhaust hood)

Except as otherwise accepted, all thermometers shall be provided near the point of measurement.

All thermometer dials shall be calibrated in metric and English units.

2B.32 ESCUTCHEON RINGS. All flush mounted instruments, gages, and other devices such as thermometers, pressure gages, and flow indicators shall be provided with wide-lip escutcheon rings.

2B.33 MOTORS. All electric motors required for the turbine related equipment shall be furnished in accordance with Section 1D.

* Refer to Basis of Contract Award

2B.34 ELECTRICAL CONNECTIONS. All electrical devices shall be wired to conveniently located terminal boxes for connection to circuits furnished under separate specifications. The final location of all terminal boxes shall be acceptable to the Engineer.

All wiring shall be installed in rigid conduit except weatherproof flexible conduit will be allowed in areas hidden by the lagging and in exposed areas where the length of flexible conduit does not exceed 3 feet.

Extra terminals, amounting to not less than 25 per cent of the active terminals, shall be provided on each terminal block furnished.

Section 2C - GENERATOR

2C.1 GENERAL. This section covers the construction requirements for each generator and related equipment.

2C.2 TYPE. The generator shall be an alternating current hydrogen cooled generator constructed especially for direct connection to a steam turbine of the type described in these specifications and shall operate satisfactorily in parallel with similar units. The generator and collector rings shall be totally enclosed in a housing. All generator and exciter windings shall be copper.

2C.3 TERMINALS. All six terminals shall be brought out of the machine and shall be available for external connections. Either end of the windings shall be designed for grounding or for use as the main generator power terminals. The generated EMF's shall reach a positive maximum in order from left to right when looking at the generator terminals from the collector end of the generator (end opposite drive).

Spade type terminals drilled for connections to bus ducts shall be provided.

A flat flanged surface suitably drilled and tapped shall be provided at the generator main terminals to accommodate isolated phase bus duct from main and neutral conductors furnished by the Owner. A metal template of the flange drilling shall be sent to the bus duct manufacturer.

2C.4 INSULATION. The insulation of the armature and field windings of the generator shall be capable of satisfactorily withstanding the temperatures and high voltages tests specified by ANSI C50.10. Insulation of the armature windings, field windings, and collectors shall be Class B.

2C.5 TELEPHONE INFLUENCE FACTOR. The generator will be operated with its neutral grounded by a distribution-transformer and resistor combination. The telephone influence factor of the generator shall be as defined by ANSI C42.10 and shall not exceed the following:

Balanced - 50

Residual - 30

2C.6 GENERATOR VOLTAGE WAVE SHAPE. The deviation factor of the open circuit terminal voltage wave of the generator shall not exceed 10 per cent, as defined by ANSI C42.10.

2C.7 SHORT CIRCUIT REQUIREMENTS. The generator shall be capable of withstanding without injury a 3 phase short circuit of not less than 30 seconds duration at the terminals when operating at its continuous rated load and at 5 per cent overvoltage.

2C.8 TEMPERATURE. The generator shall be capable of operating continuously at full rated load under usual service conditions as defined in the latest ANSI C50.13.

The temperature rises as determined by any of the methods given in the standards of ANSI shall not exceed 60 C for the stator coils and 85 C for the collector and field.

2C.9 TEMPERATURE DETECTORS. At least 12 resistance type 10 ohm copper detectors for determining the generator stator winding operating temperatures shall be provided with the generator. The detectors shall be built into the generator, fully protected from the cooling medium, distributed around the circumference and embedded in the slots in positions normally having the highest temperature. All detectors shall be installed and the leads brought out and terminated in a single terminal box.

The detectors will be used in conjunction with multiple point temperature equipment located on the Owner's panel.

In addition, resistance temperature detectors for indicating the inlet and outlet cooling air temperatures for the collector ring housing and inlet and outlet hydrogen temperature to each hydrogen cooler shall be provided.

2C.10 VOLTAGE REGULATION. It shall be stated in the PROPOSAL DATA the rise in terminal voltage expressed as a per cent of full load voltage for load of both 100 per cent and 80 per cent lagging power factor that will occur with constant field current and with the generator operating at rated voltage, normal speed and rated load, when the load is reduced to zero.

2C.11 VOLTAGE VARIATION. The generator shall operate successfully at rated kVA, power factor, and frequency, at any voltage between 5 per cent above and below rated voltage, but not necessarily in accordance with the standards of performance established for operation at normal rating.

2C.12 GENERATOR TERMINAL ACCESSORIES. The generator shall be equipped with the following accessories:

Six generator bushings

Sixteen generator bushing type current transformers, suitable for relaying and metering service. Three of the current transformers shall be calibrated metering accuracy complete with calibration curves. A terminal box complete with shorting type terminal blocks shall be furnished for mounting near the bushing current transformers to which all bushing current transformers shall be wired by the Contractor during erection of the turbine generator. Current transformer ratios will be selected later by the Engineer.

One complete set of materials and accessories necessary to electrically close the generator neutral through the excitation system current transformers if such are furnished

A suitable clamp type connector shall be furnished on the neutral buswork for cable connection to the neutral grounding unit.

An enclosure which will completely encase the generator neutral bushings, excitation system current transformers, and associated connecting buswork

Provisions for attaching the Owner's isolated phase bus duct to the generator high voltage terminals.

One metal-enclosed neutral grounding unit which will contain the following: (1) One distribution transformer, 14.4 kV to 120/240 volt single phase, 50 hertz, nonflammable liquid filled type. The transformer shall have a capacity rating of not less than 37-1/2 kVA. (2) One resistor connected to shunt the transformer secondary winding, rated continuous duty. (3) A voltage relay which will actuate two electrically separate contacts in case of ground fault. The relay shall be self-protected from continuous overvoltage and be insensitive to third harmonic voltages. The unit shall be designed for minimum dimensions. This transformer-resistor combination shall limit generator ground currents to a value consistent with equipment characteristics and shall be rated to withstand a generator ground fault for one hour. Cable connectors shall be furnished as required for terminating the Owner's cables including the generator neutral cable.

The transformer and resistor shall be enclosed within a single louvered metal enclosure, suitable for floor mounting and having internal barriers as required to isolate the equipment within the enclosure.

2C.13 TACHOMETER GENERATOR. A tachometer generator shall be supplied and directly connected to the turbine generator shaft. A remote speed indicator of a type approved by the Owner shall be supplied for mounting on a panel in the remote boiler-turbine control room. A tachometer shall be located on the turbine front end standard.

2C.14 GENERATOR COOLING. A cooling system shall be provided for safe and reliable operation and supervision of the generator stator and rotor temperatures.

Hydrogen coolers shall be provided for cooling the generator. The coolers shall be designed to transfer heat from the generator circulating hydrogen to the cooling water. The coolers shall be sized to maintain temperatures of the various parts of the generator within values as herein specified under conditions of continuous maximum kVA rating.

The physical proportions of the coolers shall conform to the shape of the generator housing. With the coolers, there shall be provided an automatic temperature alarm device with contacts designed for use in conjunction with a remote annunciator to warn the operator in case the hydrogen temperature should, for any reason, rise above safe limits.

2C.15 HYDROGEN SEAL AND CONTROL APPARATUS. A complete hydrogen seal and control system shall be provided. Oil sealed glands shall be provided at the generator shaft to prevent loss of gas, and the oil drains from the generator bearings shall be designed to prevent hydrogen from reaching the oil reservoir. The oil sealed glands shall be so designed that the upper bearing caps may be removed for inspection without removing the hydrogen from the generator casing.

The seal oil supply system shall be furnished complete including ac and dc motor driven oil pumps, reservoir, vacuum tank and/or coolers if required, regulating valves, gages, control devices, interconnecting piping, and all other equipment required to provide an automatic unit. The seal oil supply and control equipment shall be furnished as a complete shop assembled unit mounted on a common structural steel base. All electrical wiring shall terminate at a common junction box.

Electric motors furnished with the equipment shall be furnished in accordance with the requirements of Section 1D. The ac motor starting controls will be furnished under separate specifications. The dc motor starter and integral control equipment shall be furnished under these specifications.

The equipment for isolating the generator bearing oil drains from the turbine bearing oil drains shall consist of a drain oil settling and loop seal tank and interconnecting drain and vent piping and an ac motor driven vapor extractor.

The hydrogen control shall include the necessary regulators to maintain the desired hydrogen pressure inside the generator casing from 0.5 psi to maximum operating pressure, suitable devices to maintain the required degree of purity of the hydrogen to the generator; a system to permit the safe filling and scavenging of the generator including carbon dioxide bottle supply header, regulators, valves, and piping as required; all necessary instruments and alarms to indicate the function of the apparatus; and all other equipment required for safe reliable operation.

The basic control devices and instruments required for operation of the hydrogen seal and control apparatus shall be furnished and mounted on an enclosed panel preferably mounted on the generator housing or located in the vicinity of the seal oil unit. This panel shall include indicating lights, control switches, indicating gages, transmitters, and a visual sequence window type annunciator complete with annunciator horn and a

test-acknowledge-reset push-button. Indicators shall be provided for hydrogen pressures and purity. The annunciator shall give indication at the panel of individual abnormal operating conditions requiring operator attention and shall include electrically isolated contacts for operating a remote alarm and/or annunciation point common to all. Pneumatic transmitters and remote receiver gages shall be furnished for indication of hydrogen pressure and purity at the main control panel furnished under separate specifications.

* Two hydrogen pressure gages shall be furnished at the hydrogen control panel. One gage shall have a range from 0 to 5 psi, and one gage shall have a range from 0 to 60 psi.

A seal oil pressure gage shall be mounted on the hydrogen control panel.

A portable gas analyzer for use during purging and filling operations shall be furnished.

2C.16 ELECTRICAL CONNECTIONS. All electrical devices shall be wired to conveniently located terminal boxes for connection to circuits furnished under separate specifications. The final location of all terminal boxes shall be acceptable to the Engineer.

All wiring shall be installed in rigid conduit except weatherproof flexible conduit will be allowed in areas hidden by the lagging and in exposed areas where the length of flexible conduit does not exceed 3 feet.

Extra terminals, amounting to not less than 25 per cent of the active terminals, shall be provided on each terminal block furnished.

* Refer to Basis of Contract Award

Section 2D - EXCITATION SYSTEM

2D.1 GENERAL. A complete generator voltage regulating and excita-
* tem shall be furnished. The system shall be either a rotary exciter system or a brushless excitation system or a static system utilizing brushes and slip rings for generator field application.

The excitation system shall have a high speed of response and shall have capacity sufficient to supply not less than 110 per cent of the generator requirement at its maximum ampere rating.

The excitation system shall be complete with exciter power equipment, voltage regulator, field application equipment, metal-enclosed gear, bus duct leads, associated control devices for the exciter and voltage regulator and equipment required for volts/hertz protection.

A complete description of the system offered shall be included with the Proposal.

** 2D.2 ROTARY EXCITATION SYSTEM. With the exception specified herein, a complete generator excitation system shall be furnished with the generator. The system shall utilize a shaft-driven main exciter for the source of generator field current. A pilot exciter mechanically coupled to the main exciter shall be utilized for the source of controlled main exciter field current. The system shall be automatically regulated by an indirect-acting exciter rheostatic type voltage regulator controlling a motor operated main exciter field rheostat, high-speed field-forcing and field-reducing contactors, and fixed resistors.

The excitation system shall include a voltage adjusting rheostat for controlling the generator while the regulator is in service. The system shall also include provisions to permit manual control of the generator voltage while the regulator is not in service by remotely initiated operation of the motor operated rheostat. The system shall incorporate such features so as to provide minimum and maximum excitation limits, a means to place the voltage regulator system in automatic or manual operation, a means to ascertain the balance between the voltage regulator sensing element and the system voltage prior to passing from manual to automatic voltage control, and cross-current compensation for generator parallel operation.

All rotating equipment of the proposed excitation system shall be totally enclosed and shaft driven. The excitation equipment shall be arranged for forced ventilation taking cooling air from above the turbine room floor. This air shall be discharged above the turbine floor. A suitable air filter shall be provided with the excitation equipment and shall be readily accessible for cleaning. Covers shall be easily removable for maintenance and inspection. The interior of the exciter housing shall be painted white and shall be provided with a light for illumination of the excitation equipment.

* Refer to Basis of Contract Award

** Deleted for Contract-Refer to Basis of Contract Award

All exciter appurtenances which are not a part of the rotating equipment or for remote mounting shall be furnished in metal-enclosed units, which shall have the same height and depth for lineup installation.

All equipment in metal-enclosed units shall be furnished completely wired and with all instrument, meter and control leads wired to terminal blocks for external connections. All terminal lugs for external power connections shall be furnished on the devices. All units shall have engraved identification nameplates and shall be suitable for side-by-side installation. Size and location of incoming raceway openings will be furnished later to the Contractor by the Engineer.

The following components which will form a part of this complete excitation system will be furnished and installed by the Owner:

Generator control panel

Voltmeters and ammeters

External wiring between components furnished as separate and wired units

The following components shall be furnished loose for panel mounting. They shall be shipped to the panel manufacturer by the Contractor as directed by the Engineer.

Motor operated rheostat limit indicating lights

Voltage regulator command indicating lights

Voltage regulator cutout switch (three position - manual, balance, automatic)

Semiflush mounting indirect acting exciter rheostatic type voltage regulator

Pilot-exciter field rheostat

Manually operated voltage-adjusting rheostat (with rectifiers if required)

Cross-current compensator

All auxiliary relays, transformers, reactors, capacitors, resistors or other devices required and normally installed physically adjacent to these components

The following components and any other unspecified items that may be required to form a complete excitation system as described shall be furnished, mounted and wired in indoor metal-enclosed switchgear cubicles:

One drawout type electrically operated field breaker with 2 poles normally open and one pole normally closed. The field breaker shall be capable of successfully interrupting field current during maximum transient conditions and shall have at least six "a" and six "b" auxiliary contacts for indicating lights and interlocks. The enclosure shall be equipped with cell interlocks for use with control circuits and field discharge resistor interlocking.

A suitable generator field discharge resistor and 100 mV ammeter shunt mounted and wired inside the metal-enclosed unit containing the generator field breaker

One complete generator field ground detection system

Fuses and mounting shall be provided for voltmeter, field temperature and ground detector circuits. Wiring shall be supplied from the fuses to terminal blocks for connection to external circuits.

Motor-operated main exciter field rheostat with auxiliary limit switches for control and remote indication

High-speed field-forcing and field-reducing contactor panel

Main exciter fiuld-fixed resistors

The excitation main lead connections on both the excitation source and generator shall be adapted specifically for bus duct or cables as later requested by the Owner.

A complete description and schematic wiring diagram of the excitation and voltage regulating system shall be included in the Proposal.

* 2D.3 BRUSHLESS EXCITATION SYSTEM. The alternate brushless excitation system shall be as specified herein.

2D.3.1 Rotating Exciter. A rotating rectifier exciter assembly directly connected to the generator shaft shall be furnished and shall include the following:

A permanent magnet pilot exciter for providing power to the voltage regulator

* Deleted in accordance with Item 17 of Addendum 1

An alternating current main exciter with a rotating [illegible] output from the rotating armature shall feed along the [illegible] silicon diode assembly.

A rotating rectifier assembly including silicon diodes, [illegible] fuses, and other components. The output from the diodes shall [illegible] transmitted along the shaft to the rotating generator field. [illegible] fuses shall protect against diode failure and shall be [illegible] nected with the diodes. Each fuse shall have an indicating device to indicate whether or not it has blown. Provisions shall be furnished for viewing the fuses during operation. Necessary "Strobo-Tax" instrument shall be furnished for viewing the fuse assembly during operation. A sufficient quantity of fuse-diode components shall be furnished so that continuous operation, at maximum generator output, is achieved with 80 per cent of the diodes per phase in operation.

Necessary internal connections. All rotating components shall be solidly connected together. No external leads between the exciter and the generator field shall be required.

The rotating equipment shall be totally enclosed. The covers shall be easily removable for maintenance and inspection and access doors shall be provided. The interior shall be painted white and illumination shall be provided. An air-to-water heat exchanger designed for the conditions specified in Section 2A shall be furnished. Thermocouples for measurement of hot and cold air temperatures shall be furnished.

2D.3.2 Excitation Cubicle. A complete static voltage regulator and associated excitation gear mounted in a freestanding metal-enclosed cubicle shall be furnished. The interior of the housing shall be painted white and shall be provided with a light and switch for illumination. All equipment mounted inside the housing shall be completely wired with all instruments, meter and control leads wired to terminal blocks for external connections. All major items of equipment shall be identified with engraved nameplates. Size or location of incoming raceway openings will be furnished later to the Contractor by the Engineer. Inside the housing, the following equipment shall be mounted and wired:

One complete set of suitable wiring terminal blocks and nameplates

One automatic voltage regulating unit

One amplifier panel

One power panel

One static type limiter panel

One reactance cross-current compensator

One static type damping panel

One electrically operated supply breaker

Suitable shunt

Parallel operating compensator

One set of pull fuses for control power

One set of protective relaying

Motor operated base adjuster

Automatic ground detector

2D.3.3 Remote Mounting Equipment. The following equipment, which is associated with the voltage regulator, shall be furnished as loose items to the Owner's control board supplier for mounting and wiring:

One dc ammeter with suitable scale

One manual voltage adjuster and range width transformer for setting regulator controlled voltage

One manual control voltage adjuster

One control switch for motor operated base adjuster

One set of indicating lights

One supply breaker control switch

One regulator control switch

Other devices as required for remote control of the voltage regulator

2D.4 STATIC EXCITATION SYSTEM. The alternate static excitation system shall be as specified herein.

2D.4.1 Excitation Cubicles. The equipment listed below shall be mounted and wired in an indoor type metal-enclosed switchgear group:

One drawout type electrically operated generator field breaker with two poles normally open and one pole normally closed. The

field breaker shall be capable of successfully interrupting field current during maximum transient conditions and shall have at least six "a" and six "b" auxiliary contacts for indicating lights and interlocks. The enclosure shall be equipped with cell interlocks for use with control circuits and field discharge resistor interlocking.

A suitable generator field discharge resistor and 100 mV ammeter shunt mounted and wired inside the metal-enclosed unit containing the generator field breaker

A reactive current compensator

One complete generator field ground detection system

Fuses and mountings for voltmeter and ground detector circuits. Wiring shall be supplied from the fuses to terminal blocks for connection to external circuits.

One manual control system complete with limit switches for use with remote indicating lights

Excitation system equipment including rectifiers, transformers, lights, receptacles, reactors, rheostats, and cooling apparatus which are not part of the rotating equipment or for remote mounting

One voltage regulator. Include for remote control panel mounting all necessary control and indicating devices required for operation of the regulator and excitation system. The voltage regulator control switch shall be clockwise to "raise" and counterclockwise to "lower".

All equipment in metal-enclosed units shall be furnished completely wired and with all instrument, meter, and control leads wired to terminal blocks for external connections. All terminal lugs for external power connections shall be furnished on the devices. All units shall have engraved identification nameplates and shall be suitable for side-by-side installation. Size and location of incoming raceway openings will be furnished later to the Contractor by the Engineer.

The metal-enclosed units shall be forced-air cooled as required for continuous full load operation in an area where ambient temperature is 50 C. All ventilation openings shall have stainless steel bug screens. Air inlet openings shall have monel filters. Ventilating fans shall be located at the air inlet openings so the interior of the metal-enclosed units is pressurized. A ventilating air flow switch with alarm contacts shall be provided. The interior of the enclosures shall be finish painted with gloss white enamel as described in Section 1B under SHOP COATING.

The interior of each enclosure shall be illuminated by an incandescent lighting fixture mounted on the underside of the enclosure roof. The light shall be controlled by a switch mounted just inside of the enclosure door. Internal panel wiring and circuit protection shall be furnished by the Contractor.

2D.4.2 Voltage Regulator Requirements. The voltage regulator shall include a voltage adjusting rheostat for controlling the generator voltage while the regulator is in service. It shall also include provision for manually controlling the generator voltage while the regulator is not in use by use of a motor operated rheostat. The regulator shall include equipment for volts/hertz protection, exciter field overcurrent protection, maximum excitation limiting devices and equipment suitable for automatic transfer of excitation system from automatic to manual regulation at 120 per cent of rated excitation voltage after a predetermined adjustable time delay.

A remotely mounted voltage balance relay will be furnished by the Owner. The voltage regulation equipment furnished shall be so designed and connected that the remote voltage balance relay shall automatically transfer the voltage regulator to manual upon loss of voltage regulator potential.

2D.4.3 Rectifier Requirements. The rectifier section shall be suitably divided into groups to facilitate locating grounds, and suitable equipment shall be provided for testing and locating grounded diodes. Total rectifier capacity shall be adequate to meet the maximum generator excitation requirements following failure of rectifier elements and during maintenance of the rectifier. Rectifier high temperature alarm contacts shall be furnished.

2D.4.4 Transformers. Power potential transformers and other devices required for the excitation system and connected to the generator main leads shall be furnished in metal-enclosed compartments and shall be complete with provisions for connection to the Owner's isolated phase bus duct.

Current transformers supplying power to the excitation system shall be suitable for mounting beneath the generator.

2D.4.5 Connections. The excitation system main lead connections on both the excitation source and generator shall be adapted especially for cables and shall include all cable connectors as required for terminating the Owner's cables.

Section 2E - LUBE OIL CONDITIONER

2E.1 GENERAL. This section covers the design and construction requirements for each turbine lube oil conditioner.

2E.2 TYPE. The turbine lube oil conditioner shall be a Keene Corporation (formerly Bowser Incorporated) Model 832 or acceptable equal.

2E.3 DESIGN CONDITIONS. The turbine lube oil conditioner shall be designed and constructed in accordance with the following requirements.

2E.3.1 Performance Requirements. The equipment shall be especially designed for filtration of turbine lube oil which contains rust and/or oxidation inhibitor additives. The unit shall require no water or other substances, including supplementary heat for effective operation.

Operating Conditions:

Approximate quantity of oil in system, gal	As required
Filtering capacity, gph	As required
Filtering effectiveness	Down to one micron
Minimum flow back capacity, clean oil compartment, gal	As required

2E.3.2 Construction Requirements. The turbine lube oil conditioning unit shall be of an all welded construction fabricated from steel plate not less than 3/16 inch thick. All corners shall be rounded having a minimum radius of 2 inches.

2E.4 CIRCULATING PUMP. A positive displacement rotary-gear type circulating pump shall be furnished with the conditioning unit. The pump shall be direct coupled to a 380 volt, 3 phase, 50 hertz, explosionproof motor. The pump discharge head shall be at least 25 psi.

The pump shall be vertically mounted within the clean oil storage compartment with the motor above the top of the conditioning unit. The pump and motor shall be mounted on a rigid bracket which can be vertically removed from the unit. All necessary pump suction and discharge piping shall be furnished and shop installed including pump relief valve piping.

2E.5 VENTILATING FAN. A motor operated ventilating fan shall be furnished and installed on the unit for removal of oil vapors and moisture laden air from the conditioning unit. The fan shall be of the centrifugal blower type of adequate capacity. The driving motor shall be 220 volt single phase, explosionproof. A 416/240 volt transformer shall be furnished and mounted

on the unit to supply power for the fan motor. The transformer shall be energized from the 416 volt circulating pump motor leads. A manual motor starter with a bimetallic thermal overload protective device shall be provided for the fan motor and shall be mounted on each unit within an explosionproof enclosure. The ventilating fan and motor shall be provided with a removable sheet metal enclosure designed to give a pleasing appearance.

2E.6 POLISHING FILTER. Pressurized polishing filters shall be mounted within the clean oil storage compartment. The filtering material shall be of cellulose or coalescing cartridge which will not remove oil additives or inhibitors. A 3/4 inch automatic water discharge drain shall be provided on the third stage filter.

2E.7 PAINTING. All surfaces shall be thoroughly sandblasted to remove all rust, grease, and mill scale before painting. The interior surfaces shall be given a corrosion resistant coating of air dried Heresite covering. The exterior surfaces shall be given one coat of primer. Interior and exterior surfaces shall be painted before shipment.

2E.8 OVERFLOW FITTING. One 3 inch Bowser Number 825-3 vacuum-vented overflow fitting shall be furnished for use at the turbine lube oil reservoir.

2E.9 LEVEL SWITCHES. Two liquid level control switches shall be installed on the storage compartment of the oil conditioner. The level switches shall be Magnetrol, Incorporated Type 291 M-1 with explosionproof housing and provided with double pole double throw contacts rated for 250 volt dc, one ampere noninductive.

One level switch shall have contacts arranged to close on increasing level for high level annunciation. The other level switch shall have one contact arranged to open on decreasing level to stop the circulating pump on predetermined low storage level, while the other contact closes for low level annunciation.

Level switches shall be provided with shutoff valves.

2E.10 ACCESS DOORS. The oil conditioning unit shall be provided with all necessary access doors for maintenance and inspection of the equipment. The access doors shall be hinged and shall be provided with dust-tight seals and a positive latch to hold the doors tightly shut.

2E.11 SPARE FILTERS. Two complete sets of cloth bag filters and polishing filter cartridges shall be furnished with the conditioning unit.

2E.12 WIRING. All wiring for the circulating pump and ventilating fan shall be explosionproof and shall be brought to a single 416 volt, 3 phase terminal connection point on terminal blocks in an explosionproof junction

box at the conditioning unit. A remote motor starter for the circulating oil pump will be furnished under separate specifications.

2E.13 PIPING. All lubricating oil piping, valves, and fittings furnished with the oil conditioner unit shall be in accordance with Section 2B under PIPING AND VALVES and the following schedule:

Piping	2 inches and smaller	SW Schedule 40	ASTM A53
	2-1/2 inches and larger	BW Schedule 40	ASTM A53
Fittings	2 inches and smaller	SW 2000 lb	ASTM A234
	2-1/2 inches and larger	BW Schedule 40	ASTM A234
Valves	2 inches and smaller	SW 600 lb steel body, OS&Y with bolted bonnet	

All piping shall be pickled and shall be equivalent to the oil piping furnished with the turbine generator.

2E.14 RELIEF VALVE. The conditioning unit shall be provided with a relief valve in the circulating oil pump discharge for protection against excessive discharge pressure.

2E.15 DRIP PAN. A drip pan of 3/16 inch thick steel shall be furnished and mounted beneath the conditioner. The outside dimensions of the pan shall be not less than 6 inches greater than the outside dimensions of the conditioner. The drip pan shall be provided with a lip extending at least 3 inches above the bottom of the pan and shall have a tapped drain connection.

2E.16 MOTORS. In addition to the requirements stated in this section, the motors shall be in accordance with the requirements of Section 1D.

Section 2F - HYDROGEN GENERATION EQUIPMENT

2F.1 GENERAL. This section covers the design and construction requirements for the hydrogen generation equipment.

2F.2 TYPE. The hydrogen generation equipment shall be of the electrolytic cell type as manufactured by the Electrolyser Corporation, Buffalo, New York, or acceptable equal, suitable for supplying hydrogen to a hydrogen-cooled generator.

2F.3 DESIGN CONDITIONS. The hydrogen generation equipment shall be suitable for operation under the following conditions:

Hydrogen output per cell, cfh	25
Number of cells	3
Guaranteed hydrogen analysis	
Hydrogen per cent minimum	99.5
Oxygen per cent maximum	0.5
Nitrogen per cent maximum	0.5
Carbon dioxide per cent maximum	0.02
Dew point temperature, F	-40
Free oil	none
Hydrogen pressure leaving unit, psig	150
Makeup water to electrolyte	Condensate by Owner
Cooling water to unit	Inlet 95 F closed system by Owner
Electric supply to unit (nominal) volts-phase-hertz	416/3/50 240/1/50
Motors	
Three phase	380 volts, 50 hertz
Single phase	220 volts, 50 hertz

2F.4 OPERATION. The unit shall be designed for fully automatic unattended operation so as to safely start, operate and shut down, depending upon pressure in hydrogen output header, unless prevented from doing so by the safety interlocks. Alarm contacts shall be provided for Owner's annunciation if required for safe operation.

(PLN - 6104)
(TURBINE GENERATOR - M-10A)
052973

2F.5 CONVERSION EQUIPMENT. The conversion equipment shall consist of one full capacity silicon rectifier complete with necessary switching, control, meters, protective devices and bus bars between the rectifier and the cells, and spare parts.

2F.6 COMPRESSORS. The hydrogen generation unit shall be supplied with two compressors, each of which shall be capable of compressing the entire output of the cells, complete with explosionproof, NEC Class 1, Group B, motors.

2F.7 GAS DRYING. The unit shall be furnished with a dual bed, molecular sieve desiccant type dryer, with electrical regeneration heaters and controls. A prefilter shall be installed to eliminate any possibility of moisture or oil reaching the dryer.

2F.8 ANALYZERS. The unit shall be equipped with a recording type analyzer for hydrogen gas purity. An indicating type analyzer shall be furnished for electrolyte concentration on purity.

2F.9 OPERATING MATERIALS. The unit shall be furnished with a dry charge of potassium or required chemical material for electrolyte preparation and sufficient additional material to provide chemical makeup or replacement for a period of three years of normal operation.

Spare prefilter cartridges and other operating materials required for the successful operation of the unit over a three-year period shall be furnished with the original equipment.

2F.10 PIPING AND WIRING. All interconnecting piping and electrical connections between various components of the unit shall be made at the factory. Piping between the storage tank and the compressors will be furnished and installed under separate specifications.

All electrical equipment, enclosures, materials, and installation shall be in strict compliance with the requirements of the NEC for service as part of hydrogen generation equipment.

2F.11 CLEANLINESS. All surfaces expected to be in contact with hydrogen or oxygen are to be degreased and protected in transit by plugged openings.

2F.12 HYDROGEN STORAGE TANK. One horizontal hydrogen storage vessel shall be provided for operation at 165 psi working pressure. The tank shall be of sufficient capacity to release approximately 12,000 standard cubic feet of hydrogen between the operating pressures of 150 and 35 psi. The vessel shall be designed, constructed, and tested in accordance with the ASME Code for Unfired Pressure Vessels.

The tank shall be furnished with belly saddles and support saddles. The belly saddles shall be shop welded to the tank. The support saddles shall be matched to the belly plates and shipped loose for installation in the Owner-furnished concrete support piers.

(PLN - 6104)
(TURBINE GENERATOR - M-10A)
021573

APPENDIX

PERUSAHAAN UMUM LISTRIK NEGARA

SEMARANG STEAM POWER PLANT

SPECIFICATIONS AND DOCUMENTS
FOR
TURBINE GENERATORS

SPECIFICATION •M-10A

ADDENDUM 1
August 2, 1973

Each bidder shall note these revisions to the contract documents and incorporate these revisions in his proposal. Each bidder shall attach a signed acknowledged copy of this entire addendum in the front of the specifications submitted with his proposal.

This addendum consists of four pages and revised Pages C-2, CA-1, CA-2, CA-3 and 1B-16.

1. Page B-5, Article B.4.4. Revise the first paragraph to read as follows:

   "B.4.4 Firm and Complete Proposals. All prices stated in the Proposal of the successful bidder shall be firm throughout the duration of the contract without escalation."

2. Page B-10, Article B.15. Add the following paragraph at the end of the article:

   "Bidders shall insert data required in Columns 3 through 6."

3. Page C-2. Delete entire page and substitute revised Page C-2 attached to this addendum.

4. Pages CA-1, CA-2 and CA-3. Delete these pages and substitute revised pages attached to this addendum.

5. Page GC-6, Article GC.11. Delete the third paragraph (at the top of the page) and substitute the following:

   "If in the opinion of the Contractor a decision made by the Engineer is not in accordance with the meaning and intent of the contract, the Contractor may file with the Engineer, within 30 days after receipt of the decision, a written objection to the decision. Failure to file an objection within the allotted time will be considered acceptance of the Engineer's decision and the decision shall become final and conclusive."

6. Page GC-23, Article GC.32.3. Delete the third paragraph in its entirety.

7. Page GC-23, Article GC.32.4. Revise the third paragraph to read as follows:

"15% Pro rata per shipment due upon Engineer's and Owner's certification of receipt of shipment at the Owner's plant site, but in no event later than six months after shipment from the factory or storage of the equipment."

8. Page GC-29, Article GC.42. Delete this article in its entirety.

9. Page GC-29, Article GC.43. Revise the first sentence of the first sentence of the first paragraph to read as follows:

"The Owner will assist the Contractor in obtaining any required authorizations for re-exporting tools, equipment, test equipment, unused materials, and the like, all of which are and remain the property of the Contractor, from Indonesia at the conclusion of the work."

10. Page GC-30, Article GC.44. In the second paragraph, (at the top of the page) third and fourth lines, delete the phrase "well in advance, detail packing lists and other".

After the second paragraph, insert the following new paragraph:

"Documentation for customs clearance shall be submitted at least three weeks prior to the anticipated arrival of materials and equipment in Indonesia. Ten copies of the following documents shall be submitted to the Owner and two copies shall be submitted to the Engineer:

Bill of Lading
Packing List
Insurance Certificate
Invoice

The above documents shall be prepared in accordance with the applicable requirements of Article GC.32.1.1."

11. Page SC-8, Article SC.20. After the third paragraph insert the following new paragraph:

"Formwork, scaffolding, planking, and similar materials which are combustible but which are essential to execution of the work shall be protected against combustion resulting from welding sparks, cutting flames, and similar fire sources."

12. Page SC-13, Article SC.32.4. Delete entire article and substitute the following revised article:

"SC.32.4 Construction Power. The Owner will furnish electric power for construction and temporary lighting.

The construction contractor will transform the Owner's power to 416 volts, three phase, 50 hertz and install a fused disconnect switch at a location convenient to the Contractor. The construction contractor will maintain the electric power system from the Owner's point of supply to and including the disconnect switch. The Contractor shall connect to this switch and provide all wiring, equipment, devices, and facilities required to distribute power for his use and for the use of his subcontractors."

13. Page 1A-2, Article 1A.5. In the second item of work, delete the words "and sleeves". After this item of work, insert the following new item:

"Sleeves for piping and wiring"

14. Page 1B-4, Article 1B.13. After the second paragraph, insert the following new paragraph:

"Whenever possible, boxes containing tools shall be packed into larger containers with the equipment."

15. Page 1B-16, Shipping Container Identification. Delete page and substitute revised page attached to this addendum.

16. Page 2A-8, Article 2A.5. After inset paragraph Number 6, insert the following new paragraph:

"Modifications shall be completed within 180 days after notification by the Owner; otherwise, the penalties listed below shall be assessed."

17. Pages 2D-3, 2D-4 and 2D-5, Article 2D.3. Delete this article in its entirety.

18. **Pages 2D-5, 2D-6 and 2D-7, Article 2D.4.** Delete this article in its entirety.

BLACK & VEATCH
Consulting Engineers

* * * * * * * * * * * * *

ACKNOWLEDGMENT

The undersigned bidder hereby certifies that the revisions set forth in this addendum have been incorporated in his bid and are a part of the contract documents.

Signed R. J. O. Brien
General Electric Company

Date 10/5/73

C.2 **FREIGHT**

Estimated lump sum price of ocean freight including port charges for handling, loading, and unloading onto barge; insurance; and port surcharge for shipping all equipment and materials furnished under C.1 above from USA port to Port of Semarang, Indonesia:

_____

_____ Dollars ($ USA)
(Price in Words)

C.3 ERECTION

Lump sum price for receiving on board barge at the Port of Semarang, hauling, unloading, storing, erecting, and placing into successful operation at the plant site located in the harbor area the equipment and materials furnished under C.1 above, complete as specified:

_____

_____ Dollars ($ USA)
(Price in Words)

and

_____

_____ Rupiahs (Rp IND)
(Price in Words)

The undersigned hereby proposes that he will perform the majority of the erection work with his own forces and that specific portions of the erection work not performed by the undersigned will be performed by the following subcontractors, subject to Owner and AID approval:

Work Subcontracted	Name of Subcontractor

CONTRACT AGREEMENT

THIS CONTRACT AGREEMENT, made and entered into this _____ day of _____, 19__, by and between the PERUSAHAAN UMUM LISTRIK NEGARA, Party of the First Part and hereinafter called "Owner", and _____ _____, a _____ corporation with its principal office in _____ _____, Party of the Second Part and hereinafter called "Contractor",

WITNESSETH:

THAT WHEREAS, the Owner has caused to be prepared specifications, plans and other contract documents for the work as herein specified; and

WHEREAS, the said Contractor has submitted to the Owner a proposal in accordance with the terms of this Contract Agreement; and

WHEREAS, the Owner has determined and declared the aforesaid Contractor has submitted the lowest evaluated proposal for the said work and has duly awarded to the said Contractor a contract therefor, for the sum or sums named in the Contractor's Proposal, a copy thereof being attached to and made a part of this Contract Agreement:

NOW, THEREFORE, in consideration of the compensation to be paid to the Contractor and of the mutual agreements herein contained, the parties to these presents have agreed and hereby agree, the Owner for itself and its successors, and the Contractor for itself, himself, or themselves, or its, his or their successors and assigns, or its, his or their executors and administrators, as follows:

ARTICLE I. That the Contractor shall furnish fas USA port of shipment; furnish ocean freight (including port charges for handling, loading, and unloading) insurance and surcharges; and receive at the Port of Semarang, transport, handle, store, erect and place in successful operation at the Owner's site _____, all in accordance with the provisions of the contract documents, which are attached and made a part hereof, and shall execute and complete all work included in and covered by the Owner's official award of this Contract Agreement to the said Contractor.

ARTICLE II. That the Owner shall pay to the Contractor for furnishing fas USA port of shipment equipment and materials designated in the foregoing Article I as embraced in this Contract Agreement, and the Contractor will accept as full compensation therefor, the sum (subject to adjustments

as provided by the contract) of _____

_____, ($_____);
payment to be made in United States currency in the manner provided in the specifications attached hereto.

ARTICLE III. That the Owner shall pay to the Contractor for furnishing the actual cost of ocean freight (including port charges for handling, loading, and unloading), insurance and surcharge on equipment and materials designated in the foregoing Article I from the USA port of shipment to the Port of Semarang, Java, Indonesia, and the Contractor will accept as com-

pensation therefor the estimated sum of _____

_____, ($_____);
subject to final adjustment to actual cost at the conclusion of the shipment of all required materials and equipment; payment to be made in United States currency in the manner provided in the specifications attached hereto.

ARTICLE IV - That the Owner shall pay to the Contractor for receiving at the Port of Semarang, transporting, handling, storing, erecting, and placing in successful operation the equipment and materials designated in the foregoing Article I as embraced in this Contract Agreement, and the Contractor will accept as full compensation therefor, the sum

(subject to adjustments as provided by the contract) of _____

_____($_____); and

_____(Rp_____)
payment to be made in United States of America currency and Indonesian currency in the manner provided in the specifications attached hereto.

ARTICLE V. That time of delivery and time of completion of erection are of the essence of this Contract Agreement, and that the Contractor shall proceed with the specified work and shall conform to the schedule specified in Section 1A of the attached specifications under the heading "SCHEDULE".

ARTICLE VI. That in the event the Contractor shall fail to complete the specified erection and construction within the time period stipulated in the foregoing Article V the Contractor shall be liable to the Owner for the amount of ONE THOUSAND DOLLARS ($1,000.00), as liquidated damages and not as a penalty, for each calendar day of default in accordance with the provisions of Article GC.34 of the General Conditions; that said liquidated damages shall apply individually to Units 1 and 2; provided however, that the total amount of said liquidated damages shall not exceed ten per cent of that portion of the contract price for equipment and materials stated in Article II of this Contract Agreement which comprises the contract price for all of the equipment and materials for that Unit.

ARTICLE VII. That in the event the equipment furnished by the Contractor shall fail to fulfill certain performance guarantees as specified in Article 2A.5 of the specifications the Contractor shall be liable to the Owner, as a penalty, for the amounts calculated in accordance with the provisions of aforesaid Article 2A.5.

IN WITNESS WHEREOF, the parties hereto have executed this Contract Agreement as of the day and year first above written.

PERUSAHAAN UMUM LISTRIK NEGARA

Attest _____ (Seal)

_____ By _____

CONTRACTOR

_____

Attest _____ (Seal)

_____ By _____

* * * * * * * * * * * * * * * *

The foregoing Contract is in correct form according to law and is hereby approved.

_____
Attorney for Owner

(PLN - 6104)
(TURBINE GENERATOR - M-10A)
(ADDENDUM 1)
080273

YELLOW

PROJECT AID
BARANG PEMERINTAH
PROYEK PELITA

RED
BLUE

PERUSAHAAN UMUM LISTRIK NEGARA
PROYEK PLTU SEMARANG
JL. SILIWANGI 379 SEMARANG

L/C NO.:
I.R. NO.:

SEMARANG
INDONESIA

CASE NO.:

GROSS WEIGHT:
NET WEIGHT:
DIMENSION:

NOTES:
1. THE ABOVE MARKINGS ARE TO BE PLACED ON TWO OPPOSITE STANDING SIDES.
2. TAGS ARE TO BE MARKED AS SHOWN ABOVE EXCEPT THAT CORNER MARKINGS ARE NOT REQUIRED.
3. TAGS ARE TO BE PROTECTED FROM FADING.
4. AID "CLASPED HANDS" EMBLEM SHALL ALSO BE APPLIED TO ALL SHIPPING CONTAINERS.

BLACK & VEATCH INTERNATIONAL CONSULTING ENGINEERS KANSAS CITY MISSOURI USA	SHIPPING CONTAINER IDENTIFICATION	PROJECT 6104
	PERUSAHAAN UMUM LISTRIK NEGARA SEMARANG STEAM POWER PLANT UNITS 1&2	PAGE 1B-16

PERUSAHAAN UMUM LISTRIK NEGARA

SEMARANG STEAM POWER PLANT

SPECIFICATIONS AND DOCUMENTS
FOR
TURBINE GENERATORS

SPECIFICATION M-10A

ADDENDUM 2
August 15, 1973

Each bidder shall note these revisions to the contract documents and incorporate these revisions in his proposal. Each bidder shall attach a signed acknowledged copy of this entire addendum in the front of the specifications submitted with his proposal.

This addendum consists of two pages and revised Page C-1.

1. Page C-1. Delete entire page and substitute revised Page C-1 attached to this addendum.

2. Page D-7, Article D.5.6. Delete the words "(if proposed)".

3. Page D-9, Article D.5.7. Delete this article in its entirety.

4. Page D-10, Article D.5.8. Delete this article in its entirety.

5. Page GC-13, Article GC.22.2. Delete the last sentence of the first paragraph and substitute the following:

   "The Owner will reimburse the Contractor, as approved by the Engineer, any such Indonesian taxes that the Contractor is required to pay in order to perform the work under this Contract."

6. Page GC-26, Article GC.34. At the end of the article, insert the following new paragraph:

   "If the Engineer certifies that the failure to complete the construction within the time herein agreed upon is directly due, in whole or in part, to inability of the Contractor to clear equipment and materials through Indonesian customs as a result of decision of the Engineer in accordance with Article GC.22.2 not to permit the Contractor to pay Indonesian taxes, the Contractor will not be liable for liquidated damages to the extent that such damages are due to such inability to clear customs."

(PLN - 6104)
(TURBINE GENERATOR - M-10A)
(ADDENDUM 2)
081573

7. Page GC-29, Article GC.44. Delete the last sentence of the first paragraph and substitute the following:

"All customs duties, taxes, and license fees necessary for such clearance will be for the account of the Owner."

8. Page 1D1-8. In the fourth line up from the bottom of INFORMATION REQUIRED FOR MOTORS LARGER THAN 200 HP, change "3600 RPM" to read "3000 RPM".

9. Page 2A-3, Article 2A.3.3. Delete the heading "Alternator-exciter cooling air heat exchanger" and the seven items listed under the heading.

10. Page 2B-3, Aritcle 2B.11. In the sixth paragraph from the top of the page, change the last line to read:

"operating the extraction check valves."

11. Page 2D-1, Article 2D.1. Change the second sentence of the first paragraph to read:

"The system shall be a rotary exciter system."

12. Page 2D-1, Article 2D.2. Change the first sentence of the first paragraph to read:

"A complete generator excitation system shall be furnished with the generator."

BLACK & VEATCH
Consulting Engineers

* * * * * * * * * * * * * * * *

ACKNOWLEDGMENT

The undersigned bidder hereby certifies that the revisions set forth in this addendum have been incorporated in his bid and are a part of the contract documents.

Signed _____
General Electric Company

Date 10/5/73

(PLN - 6104)
(TURBINE GENERATOR - M-10A)
(ADDENDUM 2)
081573

PROPOSAL

To: Ir. Bagoes Moedijantoro, Director of Construction
PERUSAHAAN UMUM LISTRIK NEGARA
Jalan Sunan Ngampel 1
Kebajoran Baru, Jakarta, Indonesia

PROPOSAL FOR TURBINE GENERATORS

Gentlemen:

The undersigned bidder having read and examined the specifications and associated contract documents for the above designated equipment and materials which will be incorporated in the new Semarang Steam Power Plant does hereby propose to furnish and install the equipment and materials and provide the services set forth in this Proposal.

All prices stated herein are firm and shall not be subject to escalation provided this Proposal is accepted within 150 days after the date of opening of the proposals.

The prices stated in USA Dollars include all USA taxes which might lawfully be assessed against the undersigned. All Indonesian taxes which might lawfully by assessed against the undersigned shall be for the account of the Owner in accordance with the provisions of Article GC.22.2.

LUMP SUM PRICES

The undersigned bidder hereby proposes to furnish and erect two turbine generators, two lube oil conditioners, and hydrogen generation equipment complete in accordance with the specifications and associated contract documents as defined in Article GC.1 of the GENERAL CONDITIONS for the following firm lump sum prices.

C.1 EQUIPMENT AND MATERIALS

Lump sum price for furnishing two turbine generators, two lube oil conditioners, and hydrogen generation equipment fas USA port of shipment including installation technical services complete as specified:

_____

_____ Dollars ($. USA)
(Price in Words)

PERUSAHAAN UMUM LISTRIK NEGARA

SEMARANG STEAM POWER PLANT

SPECIFICATIONS AND DOCUMENTS
FOR
TURBINE GENERATORS

SPECIFICATION M-10A

ADDENDUM 3
August 31, 1973

Each bidder shall note these revisions to the contract documents and incorporate these revisions in his proposal. Each bidder shall attach a signed acknowledged copy of this entire addendum in the front of the specifications submitted with his proposal.

This addendum consists of three pages and revised Page CA-3.

1. Page CA-3. Delete entire page and substitute revised Page CA-3 attached to this addendum.

2. Page GC-12, Article GC.20. Revise the first two paragraphs on this page to read:

   "All arbitration proceedings shall be conducted in a location acceptable to both parties to the dispute. Reference to arbitration shall be a condition precedent to any other action of law.

   The Owner shall have the right to institute suit in any court of competent jurisdiction to enforce any decision or award rendered in arbitration proceedings."

3. Page GC-20, Article GC.32.1.1. In the first line of subparagraph (a), change the word "Executed" to "Completed".

4. Page GC-23, Article GC.32.3. Add the following paragraph to this article:

   "The Owner will provide an advance equal to 20 per cent of the rupiah portion of the erection work to assist the Contractor with local currency requirements at the beginning of the work in Indonesia. This advance will be made at a time agreeable

to the Owner and the Contractor prior to the start of work in Indonesia, but not before the date of initial shipment of equipment and material from the USA port of shipment. In order for the Owner to furnish this advance, the Contractor must furnish to the Owner a bank guarantee in the amount of the advance. The bank guarantee shall be issued by a Government of Indonesia owned bank."

5. Page GC-24, Article GC.32.7. Delete this article in its entirety.

6. Page GC-25, Article GC.34. In the ninth line of the third paragraph, change the word "delivery" to "erection".

7. Page 1A-3, Article 1A.6. Revise the schedule of operating dates in the first paragraph of this article to read as follows:

"

	Begin startup period	Initial Operation	Continuous Commercial Operation
Unit 1	May 15, 1976	August 1, 1976	October 1, 1976
Unit 2	August 15, 1976	November 1, 1976	January 1, 1977"

8. Page 1A-4, Article 1A.7.2. Revise the first line of the second paragraph to read:

"The Contractor shall also furnish, as required by the Engineer, the field services of direct representa-"

9. Page 1B-11, Article 1B.27. Revise the first two paragraphs to read:

"1B.27 NAMEPLATES. The nameplates for the turbine, generator, and exciter shall be lettered in both English and Indonesian. Nameplates for other equipment shall be in English.

Nameplates shall be provided for pressure gages, thermometers, switches, and other such instruments and shall be lettered in English with legends and nameplates acceptable to the Engineer."

10. Page 2A-8, Article 2A.5. Revise inset paragraph Number 7 to read:

"7. In the event that the unit cannot be modified to meet the efficiency or capability guarantees, or after modification is still incapable of meeting the capability or efficiency

guarantees, the Contractor shall be assessed the following amounts as liquidated damages and such amounts shall be deducted from the contract price:

a. For a deficiency in capability under Condition D, the amount of $300.00 per kilowatt deficiency below the guaranteed capability

b. For failure to meet the guaranteed efficiency, the amount of $750.00 per Btu deficiency. The Btu deficiency shall be the sum of the deficiencies at Conditions C and D divided by 2.

The total amount of liquidated damages shall be limited to the extent stated in the Contract Agreement."

BLACK & VEATCH
Consulting Engineers

* * * * * * * * * * *

ACKNOWLEDGMENT

The undersigned bidder hereby certifies that the revisions set forth in this addendum have been incorporated in his bid and are a part of the contract documents.

Signed H. J. C. Green
General Electric Company

Date 10/5/73

ARTICLE V. That time of delivery and time of completion of erection are of the essence of this Contract Agreement, and that the Contractor shall proceed with the specified work and shall conform to the schedule specified in Section 1A of the attached specifications under the heading "SCHEDULE".

ARTICLE VI. That in the event the Contractor shall fail to complete the specified erection and construction within the time period stipulated in the foregoing Article V the Contractor shall be liable to the Owner for the amount of ONE THOUSAND DOLLARS ($1,000.00), as liquidated damages and not as a penalty, for each calendar day of default in accordance with the provisions of Article GC.34 of the GENERAL CONDITIONS; that said liquidated damages shall apply individually to Units 1 and 2; provided however, that the total amount of said liquidated damages shall not exceed ten per cent of that portion of the contract price for equipment and materials stated in Article II of this Contract Agreement which comprises the contract price for all of the equipment and materials for that Unit.

ARTICLE VII. That in the event the equipment furnished by the Contractor shall fail to fulfill certain performance guarantees as specified in Article 2A.5 of the specifications, the Contractor shall be liable to the Owner as liquidated damages and not as a penalty, for the amounts calculated in accordance with the provisions of aforesaid Article 2A.5; provided however, that the sum of liquidated damages assessed under the provisions of the foregoing Article VI and under the provisions of this Article VII shall not exceed ten per cent of the sum of the amounts stated in Articles II and IV of this Contract Agreement.

IN WITNESS WHEREOF, the parties hereto have executed this Contract Agreement as of the day and year first above written.

PERUSAHAAN UMUM LISTRIK NEGARA

Attest _____ (Seal)

_____ By _____

CONTRACTOR

_____

Attest _____ (Seal)

_____ By _____

* * * * * * * * * * *

The foregoing Contract is in correct form according to law and is hereby approved.

_____
Attorney for Owner

(PLN - 6104)
(TURBINE GENERATOR - M-10A)
(ADDENDUM 3)
083173

PERUSAHAAN UMUM LISTRIK NEGARA

SEMARANG STEAM POWER PLANT

SPECIFICATIONS AND DOCUMENTS
FOR
TURBINE GENERATORS

SPECIFICATION M-10A

ADDENDUM 4
September 17, 1973

Each bidder shall note these revisions to the contract documents and incorporate these revisions in his proposal. Each bidder shall attach a signed acknowledged copy of this entire addendum in the front of the specifications submitted with his proposal.

This addendum consists of two pages.

1. Page A-1. Change the closing date for receipt of proposals indicated in the fifth and sixth lines of the first paragraph from "September 24, 1973" to "October 11, 1973".

2. Page SC-11, Article SC.28. Add the following paragraph to this article:

   "A 160 ton hoist and derrick will be available at the Owner's dock for use in unloading barge shipments. An operator will be furnished by the Owner. The use of the hoist and derrick will be without charge to the Contractor. The Contractor shall schedule use of the hoist and derrick with the Engineer in advance."

3. Page GC-13, Article GC.22.2. Delete paragraph added by Item 5 of Addendum 2 and add the following in its place:

   "Any Indonesian taxes which the Contractor pays in order to perform the work under this Contract will be for the account of the Owner; however, the Contractor may not pay such taxes without the prior written approval of the Owner."

4. Addendum 2, Item 6. In the fourth line of the paragraph insert, change the word "Engineer" to "Owner".

5. Addendum 1, Item 16. Revise the paragraph insert to read:

> "Modifications shall be completed within 180 days after notification by the Owner; otherwise the liquidated damages listed below shall be assessed."

BLACK & VEATCH INTERNATIONAL
Consulting Engineers

* * * * * * * * * * * * *

ACKNOWLEDGMENT

The undersigned bidder hereby certifies that the revisions set forth in this addendum have been incorporated in his bid and are a part of the contract documents.

Signed [illegible]
General Electric Company

Date 10/5/73

(PLN - 6104)
(TURBINE GENERATOR - M-10A)
(ADDENDUM 4)
091773

CONTRACT NO. PJ: 504/PER/PL

4970204 (14)
PD-AAD-777

PERUSAHAAN UMUM LISTRIK NEGARA
AGENCY OF MINISTRY OF PUBLIC WORKS AND POWER
GOVERNMENT OF REPUBLIC OF INDONESIA
SEMARANG STEAM POWER PLANT UNITS 1 AND 2

143p

LISTRIK NEGARA

AID LOAN 497-H-024

SPECIFICATIONS AND DOCUMENTS

SURFACE CONDENSERS AND AUXILIARY EQUIPMENT
CIRCULATING WATER PUMPS
SPECIFICATION 6104-M-12A

CONTRACT ISSUE

BINGHAM-WILLAMETTE CO.
2800 N.W. Front Ave.
Portland, Oregon 97210

BLACK & VEATCH INTERNATIONAL
consulting engineers
KANSAS CITY, MISSOURI, USA JAKARTA, INDONESIA

PERUSAHAAN UMUM LISTRIK NEGARA

SEMARANG STEAM POWER PLANT

SPECIFICATIONS AND DOCUMENTS
FOR
SURFACE CONDENSERS AND AUXILIARY EQUIPMENT

SPECIFICATION M-12A

TABLE OF CONTENTS

		Page	through Page
I.	BIDDING REQUIREMENTS		
	Invitation to Bidders	A-1	A-2
	Instructions to Bidders	B-1	B-8
	Proposal	C-1	C-7
*	Proposal Data	D-1	D-16
	Contractor's Proposal PE-9630		
	Proposal Information	11 pages	
	Contractor's Telex dated 12 June 1974	1 page	
	Contractor's Letter dated 17 June 1974	2 pages	
	Contractor's Telex dated 18 June 1974	1 page	
**	~~Bid Bond~~	~~E-1~~	~~E-2~~
II.	CONTRACT FORMS		
	Contract Agreement	CA-1	CA-3
	Basis of Contract Award	BA-1	
	Performance Bond	PB-1	PB-2
III.	GENERAL CONDITIONS	GC-1	GC-32
IV.	SPECIFICATIONS		
	Part 1 - GENERAL REQUIREMENTS		
	Section		
	1A - General Description and Scope of the Work	1A-1	1A-4
	1B - General Equipment Specifications	1B-1	1B-17
	1C - Engineering Data	1C-1	1C-5
	1D - Electric Motors	1D-1	1D1-12

* Pages D-3 through D-8 and D-14 through D-16 deleted for Contract
** Bid Bond Deleted for Contract

(PLN - 6104)
(SURFACE CONDENSER - M-12A)
(CIRCULATING WATER PUMPS)
113073

		Page	through Page
	Part 2 - TECHNICAL REQUIREMENTS		
	Section		
***	~~2A/1 Surface Condenser~~	~~2A-1~~	~~2A-11~~
	~~2B/1 Air Removal Equipment~~	~~2B-1~~	~~2B-3~~
	~~2C/1 Condensate Pumps~~	~~2C-1~~	~~2C-5~~
	2D - Circulating Water Pumps	2D-1	2D-8
***	~~2E/1 Traveling Water Screens~~	~~2E-1~~	~~2E-7~~
	APPENDIX		
	Addendum 1 Dated 14 January 1974	1 page	

***Not included in Contract

(PLN - 6104)
(SURFACE CONDENSER - M-12A)
(CIRCULATING WATER PUMPS)
113073

INVITATION TO BIDDERS

SURFACE CONDENSERS AND AUXILIARY EQUIPMENT
FOR
SEMARANG STEAM POWER PLANT
PERUSAHAAN UMUM LISTRIK NEGARA

Sealed proposals will be received by Perusahaan Umum Listrik Negara (an agency of the Ministry of Public Works and Power of the Government of the Republic of Indonesia), at the office of the Director of Construction, Perusahaan Umum Listrik Negara, Jalan Sunan Ngampel 1, Kebajoran Baru,
* Jakarta, Indonesia until 11:00 a.m. Western Indonesia Time on ~~January 15~~, 1974 and then publicly opened for furnishing: February 1

** ~~TWO SURFACE CONDENSERS~~

~~AIR REMOVAL EQUIPMENT~~

~~FOUR CONDENSATE PUMPS~~

THREE CIRCULATING WATER PUMPS

** ~~THREE TRAVELING WATER SCREENS~~

to be incorporated in the new 100 MW (2-50 MW units) Semarang Steam Power Plant, located in the port area of the City of Semarang, Java, Indonesia.

United States funds for the project will be furnished under United States Agency for International Development (AID) Loan 497-H-024.

It will be a condition of the proposal that all proposed equipment and materials shall have their source and origin in countries designated as eligible in United States AID Geographic Code 941.

Proposals will be considered only from qualified manufacturers, or authorized representatives of qualified manufacturers, who regularly manufacture equipment and materials of the type specified and who have built three or more units with similar design requirements, each with not less than three years of successful operating experience.

Bidders must submit data with their proposals to establish their qualifications for performing the work. Proposals not accompanied by this data may be classified as nonresponsive and subject to rejection.

*Revised in accordance with Addendum 1, Item 1
**Not in Contract

(PLN - 6104)
(SURFACE CONDENSER - M-12A)
113073

Prospective bidders may examine and obtain copies of the specifications and documents at the following offices:

1. Black & Veatch International
   Jalan Sunan Ngampel 1
   Kebajoran Baru
   Jakarta, Indonesia

2. Black & Veatch International
   1500 Meadow Lake Parkway
   Kansas City, Missouri 64114 USA

Copies of the specifications and documents obtained in the United States require a deposit of $5.00; those obtained in Indonesia require a deposit of Rp 2000. Deposits will not be refunded.

All proposals must be made on the printed forms included in the specifications and documents.

Seven duplicate copies of each proposal will be required, each copy being bound with a copy of the specifications and documents.

Each bidder will be required to furnish a bid bond in the amount of not less than 10 per cent of the total value of the bid. The bid bond shall be as stipulated in the Instructions to Bidders included with the specifications and documents.

All proposals shall be firm and cannot be altered, withdrawn, or resubmitted for a period of 100 days after the date set for opening of bids. All proposals shall be on a lump sum basis. Proposals may be submitted for all three items specified on the Proposal form, any one item, or any combination of Items C.1, C.2, C.3. Proposals will not be considered for any individual piece of equipment constituting part of an item. Bids on individual portions of the work will not be considered.

The Perusahaan Umum Listrik Negara reserves the right to accept the proposal which, in its judgment, is the lowest responsive proposal submitted by a qualified bidder. Any award, waiver of irregularities, or rejection of proposals shall be subject to AID approval. Proposals received after the specified time of closing will be returned unopened.

MINISTRY OF PUBLIC WORKS AND POWER
represented by
PERUSAHAAN UMUM LISTRIK NEGARA
Ir. Bagoes Moedijantoro,
Director of Construction

(PLN - 6104)
(SURFACE CONDENSER - M-12A)
113073

INSTRUCTIONS TO BIDDERS

B.1 GENERAL. Proposals are requested by the Perusahaan Umum Listrik Negara, an agency of the Ministry of Public Works and Power of the Government of the Republic of Indonesia, hereinafter referred to as the "Owner" for equipment, materials, and related work set forth in the attached specifications. All proposals shall be prepared and submitted in accordance with these instructions.

B.2 GENERAL PROJECT DESCRIPTION. The specified equipment and materials will be incorporated in the Owner's new Semarang Steam Power Plant. The plant will be located in the port area of the city of Semarang, Central Java, Indonesia. Initial plant construction will consist of two 50 MW oil fired steam electric generating units.

The dollar portion of the project will be financed by the United States Agency for International Development (AID) under Loan 497-H-024. The rupiah portion of the project will be financed by the Government of Indonesia.

B.3 BIDDER QUALIFICATIONS. In order for his proposal to be considered, the bidder must submit written evidence, satisfactory to the Owner, of his qualifications to satisfactorily perform the specified work. Qualification data shall be submitted with the proposal in a separate envelope clearly marked as follows:

QUALIFYING DATA

For _____
(Title of Work Proposed)

By _____
(Bidder's Name)

For

PERUSAHAAN UMUM LISTRIK NEGARA BID OPENING
FOR SEMARANG STEAM POWER PLANT

_____
(Date of Bid Opening)

The envelope of qualifying data shall be placed inside the envelope containing the proposal.

The bidder shall certify his qualifications by submitting evidence that he:

Is a qualified manufacturer, or authorized representative of a qualified manufacturer, who regularly manufactures equipment and materials of the type specified

Does not anticipate change in ownership or major policy during the period of the proposed work. If such change is anticipated the scope and effect thereof shall be defined.

Has adequate plant and manufacturing capacity available to do the work properly and expeditiously within the time period specified

Has, or can arrange for, adequate field service organization to provide technical services in Indonesia such as erection advisors or servicemen if such services are required by the specifications and associated documents

Has adequate financial status to meet the financial obligations incident to the work

Has no claims pending against him regarding the quality of performance of his work

Is a well established manufacturer having adequate technical knowledge and practical experience

Has designed and manufactured three or more units having similar design requirements, each of which has been in successful commercial operation for a period of not less than three years. The evidence shall consist of a selected listing of the units, indicating for each unit the owner's name, location, date of initial operation, and rating. The listing shall be specially prepared for this particular bidding and shall list only those units falling under the above requirements.

Has designed and manufactured equipment of the type proposed during the preceding two years

The bidder is advised that the above stated requirements are a minimum and that the Owner reserves the right to request the submittal of additional information.

The Owner reserves the right to reject the proposal of any bidder if, in the opinion of the Owner, the qualification data is incomplete or the bidder is not qualified to satisfactorily perform the work.

B.4 PROPOSALS. Seven copies of each proposal shall be prepared and submitted, each copy containing a complete bound copy of these specifications and documents. Proposals which are not prepared and submitted in accordance with these instructions may be rejected.

B.4.1 Preparation. Each proposal shall be carefully prepared using the proposal and data forms bound herewith. Entries on the proposal and data forms shall be typed, using dark black ribbon, or legibly written in black ink. All prices shall be stated in words and figures except where the forms provide for figures only. All proposals shall be in English.

The bidder shall not alter any part of these specifications and documents in any way.

The bidder shall staple or otherwise bind, with each bound copy of the specifications and documents submitted, a signed copy of each addendum issued for these specifications during the bidding period. The bidder shall assemble all drawings, catalog data, and other supplementary information necessary to thoroughly describe materials and equipment covered by the proposal, and shall attach such supplemental information to the bound copy of these specifications and documents submitted with the proposal. No such descriptive data will in any way be construed to be a part of or to modify in any way the bidder's proposal.

B.4.2 Signatures. Each bidder shall sign the proposal with his usual signature and shall give his full business address. The names of all persons signing should also be typed or printed below the signature.

Bids by partnerships shall be signed with the partnership name followed by the signature and designation of one of the partners or other authorized representative. A complete list of the partners shall be included with the proposal.

Bids by a corporation shall be signed in the official corporate name of the corporation, followed by the signature and designation of the president, secretary, or other person authorized to bind the corporation.

A bid by a person who affixes to his signature the word "president", "secretary", "agent", or other designation, without disclosing his principal, will be rejected. Satisfactory evidence of the authority of the officer signing in behalf of the corporation shall be furnished. Bidding corporations shall designate the state in which they are incorporated and the address of their principal office.

The bidder's name stated on the proposal shall be the exact legal name of the firm.

B.4.3 Submittal. Proposals shall be submitted in sealed envelopes endorsed on the outside with the bidder's name and address and marked on the outside as follows:

PROPOSAL FOR _____ (Name of equipment) _____
SEMARANG STEAM POWER PLANT
TO BE OPENED 11:00 A.M. WESTERN INDONESIA
TIME IN JAKARTA, INDONESIA on
_____, 197_.
(Date of Opening)

The proposal along with supplementary information and qualification data shall be transmitted to the following:

The original and four copies to:

Perusahaan Umum Listrik Negara
Jalan Suman Ngampel 1
Kebajoran Baru
Jakarta, Indonesia

Attention: Ir. Bagoes Moedijantoro
Director of Construction

Two copies to:

Black & Veatch International
1500 Meadow Lake Parkway
Kansas City, Missouri USA 64114

Attention: Mr. L. J. Svoboda

Proposals may be submitted either by authorized local representatives or directly by qualified manufacturers. A single proprietary interest shall not submit multiple proposals for the same work even though the individual proposals are submitted under different names. The Owner reserves the right to reject proposals so submitted.

Proposals will be received up to the date and time specified in the INVITATION TO BIDDERS. Proposals received after that time will be returned to the sender unopened. It is the responsibility of the bidder to assure that his proposal is received by Perusahaan Umum Listrik Negara at their office prior to the time set for opening. Bidders shall send a cablegram to the Owner at the time their proposal is dispatched indicating that the proposal has been dispatched. The cablegram should be addressed to Ir. Bagoes Moedijantoro, Director of Construction, PLNPST, Jakarta, Indonesia.

B.4.4 Firm and Complete Proposals. All prices stated in the Proposal of the successful bidder shall be firm throughout the duration of the contract without escalation.

Unless otherwise specified, proposals shall be for the complete scope of the work specified in these specifications and documents. Proposals for individual components of the work will be considered only to the extent such partial scope of supply is specifically stipulated in the INVITATION TO BIDDERS and the PROPOSAL sections included as a part of these specifications and documents.

B.4.5 Withdrawal. Proposals may be withdrawn, altered, and resubmitted at any time before the time set for opening the bids. Proposals may not be withdrawn, altered, or resubmitted for a period of 100 days thereafter.

B.5 INFORMATION TO BE SUBMITTED WITH PROPOSAL. Each bidder shall submit with his proposal the name of manufacturer and the type or model of each principal item of equipment or material he proposes to furnish. He shall also submit drawings and descriptive matter indicating general dimensions, principle of operation, and the materials from which the parts are made. Any bid not having sufficient descriptive matter to describe accurately the equipment or materials bid upon may be rejected as irregular. The drawings and descriptive matter submitted by the successful bidder will be retained by the Owner. Any material departure from these drawings and descriptive matter as submitted will not be permitted without written permission from the Owner.

Verbal statements made by the bidder at any time regarding quality, quantity or arrangement of equipment will not be considered.

If alternate equipment or materials are indicated in these specifications, the Bidder shall have the option of selecting any one of the alternates so indicated.

B.6 PROPOSAL GUARANTEE. Each proposal shall be accompanied by a proposal guarantee in an amount not less than 10 per cent of the total bid.

The proposal guarantee shall be made payable without condition, in USA Dollars to Perusahaan Umum Listrik Negara, and the amount thereof may be retained by said Perusahaan Umum Listrik Negara as liquidated damages if the bidder's proposal is accepted and the bidder fails to enter into contract in the form prescribed, with legally responsible surety, within 45 calendar days after the date he is awarded the contract.

The proposal guarantee of each unsuccessful bidder will be returned after award of contract or when his proposal is rejected. The proposal guarantee of the bidder to whom the contract is awarded will be returned when said bidder executes the contract and files a satisfactory Performance Bond. The proposal guarantee of the second lowest responsive bidder may be retained for a period not to exceed 100 days pending the execution of the contract and Performance Bond by the successful bidder.

The proposal guarantee shall be in the form of a bank draft, an irrevocable bank guarantee or an acceptable bidder's bond in the form included herein. The surety must be approved by the Owner and AID. Bank drafts or guarantees must be issued by a solvent USA bank meeting the criteria established by the USA Controller of Currency for guarantees issued by USA national banks. Bidder's bonds must be issued by companies authorized to do business in the bidder's state of incorporation and must meet the criteria established by the USA Treasury Department for acceptable sureties on U.S. Government bonds.

B.7 TAXES, PERMITS, AND LICENSES. The bidder's attention is directed to the provisions set forth in the GENERAL CONDITIONS under the article TAXES, PERMITS, AND LICENSES. Each bidder shall be responsible for determining the applicable taxes, permits, and licenses.

B.8 TIME SCHEDULE. The time schedule for performing the specified work will be a basic consideration of the Contract. The proposal shall be based upon submittal of drawings and engineering data in accordance with the requirements of Section 1C and performance of the work in accordance with the schedule specified in Section 1A. It will be necessary that the bidder satisfy the Owner of his ability to complete the work within the stipulated time. In this connection, attention is called to the provisions of the attached GENERAL CONDITIONS relative to delays and extensions of time.

B.9 LOCAL CONDITIONS. Each bidder is urged to thoroughly inform himself of all conditions and factors which would affect the prosecution and completion of the work.

It must be understood and agreed that such factors have been properly investigated and considered in the preparation of the proposal submitted. No claims for financial adjustment to any contract awarded for the work under these specifications and documents will be permitted by the Owner which are based on the lack of such prior information or its effect on the cost of the work.

B.10 INTERPRETATION OF SPECIFICATIONS. If any prospective bidder is in doubt as to the true meaning of any part of the proposed contract documents, he may submit to the Engineer a written request for an interpretation. The person submitting the request will be responsible for its prompt delivery. Any interpretation of the proposed documents will be made only by addendum mailed or delivered to each person receiving a set of such documents. The Owner will not be responsible for any other explanations or interpretations of the proposed documents.

B.11 BOND. The Contractor to whom the work is awarded will be required to furnish a performance bond to the Owner prior to signing of the contract. The bond shall be equal to 30 per cent of the dollar value of the contract and shall be payable in USA Dollars.

The bond shall cover the performance of the work included in these specifications. The bond shall be executed on the form provided a copy of which is attached hereto. The bond shall be signed by a surety authorized to do business in the state in which the Contractor is incorporated or has his principal office; acceptable as surety to the Owner and AID; and acceptable as surety under the criteria established by the USA Treasury Department for acceptable sureties on U.S. Government bonds.

B.12 INELIGIBILITY. No firm included by AID on its list of suspended, debarred, or ineligible bidders will be permitted to bid either individually or in a joint venture, nor shall any firm so listed qualify for performing the work as a subcontractor or otherwise.

No USA firm, or any firm owned more than 50 per cent by a USA firm shall be eligible for bidding or financing if the USA firm is not in compliance with Executive Order 11246, as amended, and regulations and orders issued thereunder.

B.13 ACCEPTANCE AND REJECTION OF PROPOSALS. The Owner reserves the right to accept the proposal which, in its judgment, is the lowest responsive proposal submitted by a qualified bidder. Any award, waiver of irregularities, or rejection of proposals shall be subject to AID approval.

A responsive proposal is one which accepts all of the terms and conditions of these specifications and documents without material modification. A material modification is one which affects in any way the price, quantity, quality, or delivery or installation date of equipment or materials; or the price, quality, scope, delivery date, or completion date of equipment and materials, or other services to be supplied or performed; or, which limits in any way any responsibilities, duties, or liabilities of the bidder or any rights of the Owner or of AID, as any of the foregoing have been specified or defined in these specifications and documents.

B.14 CURRENCIES. Proposal pricing shall be stated in USA Dollars and Indonesian Rupiahs as shown in the Proposal. It is intended that the Contractor be paid in the currencies expended by him. Costs incurred outside Indonesia shall be shown as USA Dollars. Pricing shall be in Indonesian Rupiahs for that portion of the work performed in Indonesia, except wage payment to expatriate employees and other allowable dollar costs.

B.15 EVALUATION. Proposals will be evaluated on the basis of the fas
* lump sum price bid for ~~each of~~ the ~~three categories of~~ equipment and materials independently as specified.

The delivery dates stipulated in Article 1A.6 must be met by the successful bidder and must be acknowledged in the proposal submitted.

*Revised in accordance with the Contract

PROPOSAL

To: Ir. Bagoes Moedijantoro, Director of Construction
PERUSAHAAN UMUM LISTRIK NEGARA
Jalan Sunan Ngampel 1
Kebajoran Baru, Jakarta, Indonesia

PROPOSAL FOR SURFACE CONDENSERS AND AUXILIARY EQUIPMENT

Gentlemen:

The undersigned bidder having read and examined the specifications and associated contract documents for the above designated equipment which will be incorporated in the new Semarang Steam Power Plant does hereby propose to furnish the equipment and provide the services set forth in this Proposal.

All prices stated herein are firm and shall not be subject to escalation provided this Proposal is accepted within 100 days after the date of opening of the proposals.

The prices stated in USA Dollars include all USA taxes which might lawfully be assessed against the undersigned. All Indonesian taxes which might lawfully be assessed against the undersigned shall be for the account of the Owner in accordance with the provisions of Article GC.22.2 of the GENERAL CONDITIONS.

LUMP SUM PRICES

The undersigned bidder hereby proposes to furnish the equipment and services priced herein complete in accordance with the specifications and associated contract documents as defined in Article GC.1 of the GENERAL CONDITIONS for the following firm lump sum prices.

* C.1 SURFACE CONDENSERS, TUBES, CONDENSATE PUMPS, AND AIR REMOVAL EQUIPMENT

C.1.1 Equipment and Materials

Lump sum price for furnishing two surface condensers with tubes, four condensate pumps, and air removal equipment fas USA port of shipment complete as specified:

_____

_____ Dollars($ USA)
(Price in Words)

* Not included in Contract

(PLN - 6104)
(SURFACE CONDENSER - M-12A)
113073

* C.1.2 Freight

Estimated lump sum price of ocean freight including port charges for handling, loading, and unloading onto barge; insurance; and port surcharge for shipping all equipment and materials furnished under C.1.1 above from USA port to Port of Semarang, Indonesia:

_____

_____ Dollars($ USA)
(Price in Words)

C.1.3 Manufacturer's Field Services

If required by the Owner, manufacturer's technical field services specified in Section 1A will be furnished at the following rates.

C.1.3.1 Representative's Daily Service Rate

Service rate for each technical field representative exclusive of living costs, expenses and transportation, and on the basis of six 8-hour days per week on the site:

_____

_____ Dollars($ USA)
(Price in Words)

C.1.3.2 Overtime Rate

Service representative's time in excess of 48 hours per week will be provided at the following hourly rate:

_____

_____ Dollars($ USA)
(Price in Words)

C.1.3.3 Expense

Living costs and other expenses incurred in Indonesia will be invoiced at cost but will not exceed the following per diem:

_____

_____ Rupiahs(Rp IND)
(Price in Words)

*Not in Contract

* C.1.3.4 Transportation

Estimated cost per round trip from the bidder's office to Semarang, Central Java, Indonesia and return, including living costs and other expenses incidental to travel, but excluding per diem salary cost:

_____

_____ Dollars($ USA)
(Price in Words)

and

_____

_____ Rupiahs(Rp IND)
(Price in Words)

** C.2 CIRCULATING WATER PUMPS

** C.2.1 Equipment and Materials

Lump sum price for furnishing three circulating water pumps fas USA port of shipment complete as specified:

_____

_____ Dollars($ USA)
(Price in Words)

*** C.2.2 Freight

Estimated lump sum price of ocean freight including port charges for handling, loading, and unloading onto barge; insurance; and port surcharge for shipping all equipment and materials furnished under C.2.1 above from USA port to Port of Semarang, Indonesia:

_____

_____ Dollars($ USA)
(Price in Words)

* Not in Contract
** See Contractor's Telex Dated 18 June 1974
*** See Contractor's letter dated 17 June 1974

C.2.3 Manufacturer's Field Services

If required by the Owner, manufacturer's technical field services specified in Section 1A will be furnished at the following rates.

** C.2.3.1 Representative's Daily Service Rate

Service rate for each technical field representative exclusive of living costs, expenses and transportation, and on the basis of six 8-hour days per week on the site:

_____

_____ Dollars($ USA)
(Price in Words)

** C.2.3.2 Overtime Rate

Service representative's time in excess of 48 hours per week will be provided at the following hourly rate:

_____

_____ Dollars($ USA)
(Price in Words)

** C.2.3.3 Expenses

Living costs and other expenses incurred in Indonesia will be invoiced at cost but will not exceed the following per diem:

_____

_____ Rupiahs(Rp IND)
(Price in Words)

** C.2.3.4 Transportation

Estimated cost per round trip from the bidder's office to Semarang, Central Java, Indonesia and return, including living costs and other expenses incidental to travel, but excluding per diem salary cost:

_____

_____ Dollars($ USA)
(Price in Words)

** See Contractor's letter dated 17 June 1974
(PLN - 6104)
(SURFACE CONDENSER - M-12A)
113073

and

**

_____

_____ Rupiahs (Rp IND)
(Price in Words)

C.3 ~~TRAVELING WATER SCREENS~~

C.3.1 Equipment and Materials

Lump sum price for furnishing three traveling water screens fas USA port of shipment complete as specified:

_____

_____ Dollars ($ USA)
(Price in Words)

C.3.2 Freight

Estimated lump sum price of ocean freight including port charges for handling, loading, and unloading onto barge; insurance; and port surcharge for shipping all equipment and materials furnished under C.3.1 above from USA port to Port of Semarang, Indonesia:

_____

_____ Dollars ($ USA)
(Price in Words)

C.3.3 Manufacturer's Field Services

If required by the Owner, manufacturer's technical field services specified in Section 1A will be furnished at the following rates.

C.3.3.1 Representative's Daily Service Rate

Service rate for each technical field representative exclusive of living costs, expenses and transportation, and on the basis of six 8-hour days per week on the site:

_____

_____ Dollars ($ USA)
(Price in Words)

*Not in Contract

**See Contractor's Letter dated 17 June 1974

(PLN - 6104)
(SURFACE CONDENSER - M-12A)
113073

* C.3.3.2 Overtime Rate

Service representative's time in excess of 48 hours per week will be provided at the following hourly rate:

_____

_____ Dollars ($ USA)

(Price in Words)

C.3.3.3 Expenses

Living costs and other expenses incurred in Indonesia will be invoiced at cost but will not exceed the following per diem:

_____

_____ Rupiahs (Rp IND)

(Price in Words)

C.3.3.4 Transportation

Estimated cost per round trip from the bidder's office to Semarang, Central Java, Indonesia and return, including living costs and other expenses incidental to travel, but excluding per diem salary cost:

_____

_____ Dollars ($ USA

(Price in Words)

and

_____

_____ Rupiahs (Rp IND)

(Price in Words)

The rupiahs to dollar conversion rate is 415 Indonesian Rupiahs per USA Dollar.

*Not in Contract

(PLN - 6104)
(SURFACE CONDENSER - M-12A)
113073

The undersigned hereby declares that only the persons or firms interested in the Proposal as principal or principals are named herein, and that no other persons or firms than herein mentioned have any interest in this Proposal or in the contract to be entered into; that this Proposal is made without connection with any other person, company, or parties likewise submitting a proposal; and that it is in all respects for and in good faith, without collusion or fraud.

If this Proposal is accepted, the undersigned bidder agrees to submit engineering data, provide services, and complete delivery of the equipment and materials in accordance with the schedules stipulated in the specifications. The undersigned fully understands that adherence to the schedules stipulated is of the essence of the contract.

If this Proposal is accepted, the undersigned hereby agrees to enter into a contract on the attached forms within 45 calendar days from the date of notice by the Owner of award of contract and to furnish a Performance Bond satisfactory to the Owner.

Dated at _____ this _____ day of _____, 19__.

Bidder _____

By _____

Title _____

Business Address of Bidder _____

_____

State of Incorporation _____

Address of Principal Office _____

_____

(PLN - 6104)
(SURFACE CONDENSER - M-12A)
113073

PROPOSAL DATA

D.1 GENERAL. Each bidder shall submit complete and definitive information on his offering in sufficient detail to permit a complete analysis of the bid. The requirements stated in the INSTRUCTIONS TO BIDDERS, relative to information submittal shall be followed.

The requirements for information contained in this section are basic requirements. Additional information shall be provided as requested by the Engineer.

D.2 PERFORMANCE CURVES. The following performance curves shall be furnished as specified in Part 2.

* Condenser performance curves for various water and steam flows

Air ejector performance curves

Condensate pump characteristic curves

Circulating water pump characteristic curves

Motor speed-torque-current curves

D.3 DRAWINGS. Outline drawings shall be submitted showing the following information:

* Condenser arrangement including field joint locations

Tube sheet layout

Steam lanning arrangement

Condenser hotwell and deaerating section layout

Air ejector equipment arrangement

Condensate pump arrangement

Condensate pump cross section

Circulating water pump arrangement

Circulating water pump cross section

* Traveling screen drive section and elevations

Traveling screen drive dimensions

*Not in Contract

(PLN - 6104)
(SURFACE CONDENSER - M-12A)
030173

* Traveling screen floor opening requirements

Traveling screen main frame members

All drawings shall be in sufficient detail to permit preliminary plant arrangement studies to be made.

D.4 SUPPLEMENTARY INFORMATION. The following supplementary information shall be submitted:

* Description of deaeration and reheat method in condenser

Shipping breakdown of all equipment

* Description of exhaust/ trunk/ expansion joint/

Condenser construction general information

Air ejector data

Construction details and materials for traveling screens

List of recommended spare parts needed for a three year period of operation and estimated total cost, CIF. The successful bidder only will be required to submit a complete listing with individual prices.

D.5 EQUIPMENT DATA. The information required on the following pages is to assist the Engineer in analyzing the Proposal and in making an accurate estimate of the work required to install and erect the equipment and materials.

The data listed herein is stated for definitive purposes and for the convenience of the Owner.

The data listed herein shall not relieve the Contractor of his responsibility for meeting the requirements of the detailed specifications.

Note: Write entries boldly with black ink or type entries using carbon black ribbon. Do not use ball point pens. The completed pages will be reproduced by blue line printing.

*Not in Contract

BINGHAM WILLAMETTE Co.
(Bidder's Name)

Weight, lbs	_____Stator _____Rotor _____Total
Weights, lbs	
Pump, motor, and base plate	
Pumping internals	
Amount of field assembly work required	
Minimum clearance required to remove rotor, feet	
D.5.5 Circulating Water Pumps	
Manufacturer	BINGHAM WILLAMETTE Co.
Model or type number	48X45 E - SAFV
Rotative speed, rpm	500 RPM
Power required, bhp	489 AT 1.0 SP.GR.
Power required at ~~runoff~~ MIN. FLOW, bhp	570 AT 1.0 SP.GR.
Maximum required power and corresponding flow, bhp and gpm	570 AT 15,000 GPM (MIN. FLOW) AT 1.0 SP.GR.
Size of discharge connection	48"
Shaft diameter, in.	4 3/4"
Shaft coupling, type	BINGHAM ADJUSTABLE
Number of shaft couplings	LATER
Shaft tube	
Size, OD, in.	LATER
Thickness, in.	LATER

(Trim Line)

(PLN - 6104)
(SURFACE CONDENSER - M-12A)
113073

BINGHAM WILLAMETTE CO.
(Bidder's Name)

Pump column	
Size, OD, in.	48"
Thickness, in.	3/8"
Corrosion allowance, in.	STAINLESS
Length of sections	7 FEET
Material	
Pump column	18-8
Shaft	18-8
Shaft sleeves	18-8
Impellers	CF8M-STRESS RELIEVED
Suction bell	CF8
Bowls	CF8
Bowl liners	NONE
Wearing rings	NONE
Shaft tube	18-8
Thrust load imposed on thrust bearing, lbs	
Normal down	LATER
Maximum down	LATER
Up	LATER
Weights, lbs	
Pump column	6000 lbs
Shaft	LATER
Impellers	LATER
Total, each pump without motor	37,985 lbs
Weight of heaviest piece to be handled during maintenance	12,000 lbs.

(Trim Line)

(PLN - 6104)
(SURFACE CONDENSER - M-12A)
113073

BINGHAM WILLAMETTE CO.
(Bidder's Name)

Bearings	
Type	CUTLESS RUBBER
Number	LATER
Length, in.	LATER
Material	RUBBER
Description of bearing lubrication system	PUMPAGE FROM DISCHARGE
Maximum particle size allowable in lubricating water, in.	LATER
Motors	
Manufacturer	ALLIS CHALMERS
Type	VSS-IND.
Horsepower	600
Current at rated voltage, amperes	89 Full Load 525 Locked
Stator winding connection	LATER Wye LATER Delta
Description of motor insulation	CL.B. VPI (MICA-GLASS SYSTEM W/VACUUM PRESS. IMPREGNATION)
Full load speed, rpm	
Efficiency, per cent at load	91.8 Full 92.4 3/4 92.1 1/2
Power factor, per cent at load	78.9 Full 73.4 3/4 61.9 1/2
Full load torque at rated voltage, lb-ft	6,550

(Trim Line)

(PLN - 6104)
(SURFACE CONDENSER - M-12A)
030173

BINGHAM WILLAMETTE CO.
(Bidder's Name)

Torque at rated voltage in per cent of full load	CATER Max		at 80% Speed
	at 60% Speed		Locked Rotor
Speed-torque-current curve of the motor at starting voltage, ft-lbs	Max		at 80% Speed
	at 60% Speed		Locked Rotor
Speed-torque-current curve of the motor at rated voltage, ft-lbs	Max		at 80% Speed
	at 60% Speed		Locked Rotor
Will complete test data and speed-torque-current curves be furnished			
Motor open circuit time constant (T_o), seconds			

	Full Voltage	Starting Voltage
Maximum allowable locked-rotor time with motor starting from ambient temperature, seconds		
Maximum allowable locked-rotor time with motor at maximum temperature rise specified, seconds		
Cooling time before next start after running at rated full load minutes		
Acceleration time for starting conditions specified, seconds (includes driven equipment)		
Time-current curve during acceleration, curve number (attach curve)		

(Trim Line)

(PLN - 6104)
(SURFACE CONDENSER - M-12A)
030173

Bingham Willamette Co.
(Bidder's Name)

	Full Voltage	Starting Voltage
Number of successive starts		
Hot	1	
Cold	2	

Expected sound pressure level, dB flat response at 5 feet	Center Frequency, Hz	dBC
	125	
	250	
	500	
	1,000	
	2,000	
	4,000	
	8,000	
	Overall	
	Overall, dBA	

Space heater rating, kW: LATER

Description of lubrication system: SELF OIL LUB. WATER COOLER K-BURY —

Minimum clearance required to remove rotor, feet: _____ Height _____ Length _____ Width

Weight, pounds: _____ Stator _____ Rotor _____ Total

Overall dimensions, including shaft extension, inches: _____ Length _____ Width _____ Height

Shaft extension dimensions, inches: _____ Dia _____ Length

Rotor inertia, lb-ft: _____

Type of thrust bearing: KINGSBURY —

Thrust bearing losses caused by external thrust load, kW: _____

(Trim Line)

(PLN - 6104)
(SURFACE CONDENSER - M-12A)
030173

32876

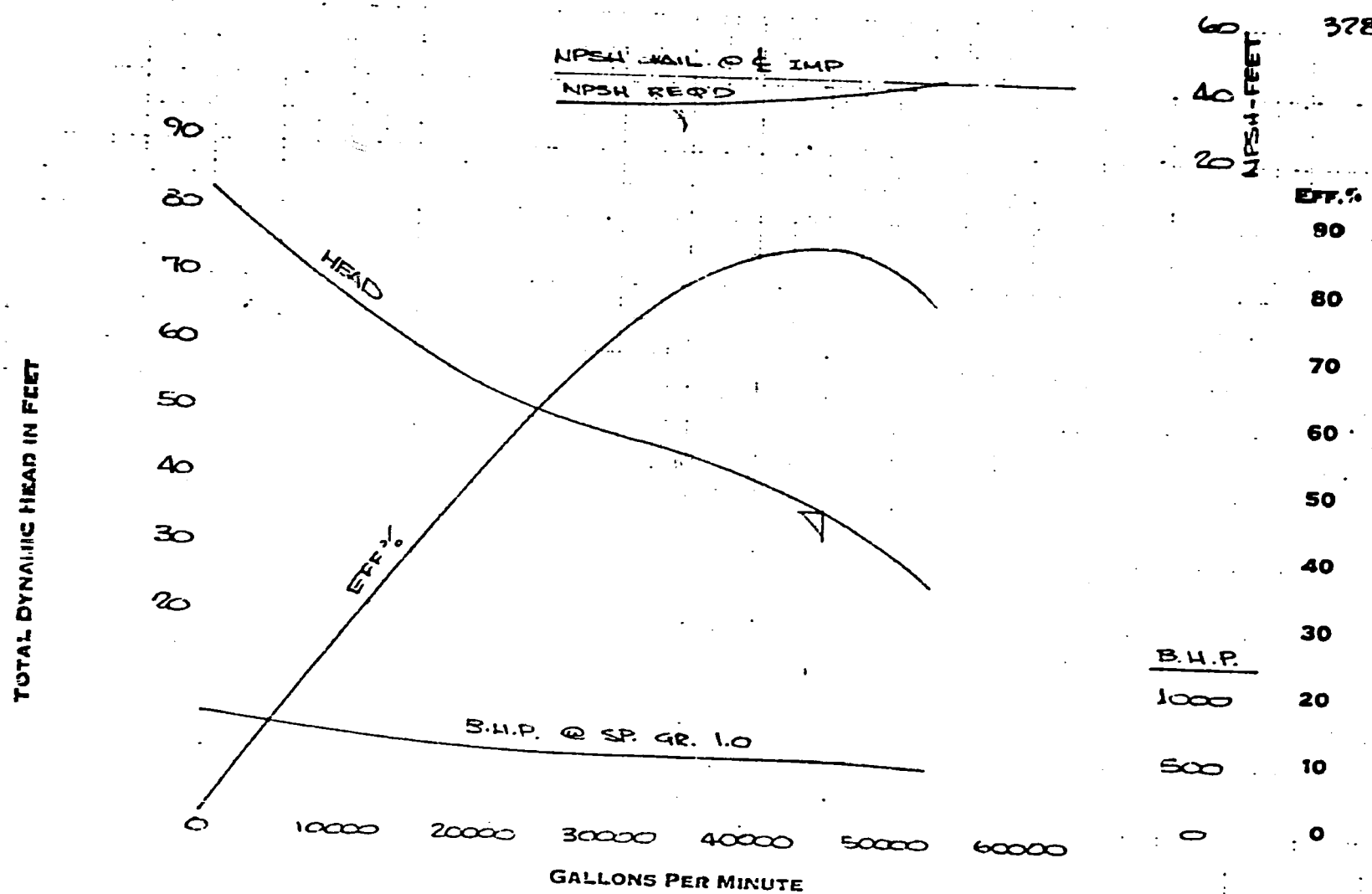

BLACK & VEATCH INTER. SEMARANG STEAM POWER PLANT PETUSAHAAN UMUM LISTRIK NEGARA CIRCULATING PUMPS	CHARACTERISTIC CURVE SHEET PUMP ENGINEERING DEPT. BYRON JACKSON DEMINGLE COMPANY	IMPELLER MAX DIA	48 × 45 E - SAFV PUMP		
		MIN DIA	DIA IMPELLER 36	IMPELLER PATT	500 R.P.M.
		EYE SIZE	NPSH REQUIRED	REFERENCE	CURVE No. 32876

DESCRIPTION TYPE SAFV

GENERAL

The Bingham-Willamette Type SAFV Pump is a vertical, wet pit, semi-open, mixed flow type pump capable of handling large capacities at low and medium heads.

STANDARD CONSTRUCTION

These pumping units consist of a bowl assembly, column pipe and discharge elbow, shaft and shaft tube, pit plate and driver stand. The lower flange of the discharge elbow is the pit plate and is used for mounting the entire unit on supports that are provided by the purchaser. Construction of the pump can be arranged so that all wetted parts (column, bowl, impeller, impeller housing and suction bell) can be removed. This feature allows servicing of the unit without disturbing the discharge piping.

Impeller...

The impeller is of the mixed flow design, the vanes of which are accurately formed, properly spaced and finished to a smooth surface. The impeller is dynamically balanced to prevent vibration. On high head applications, wear rings may be fitted on the back shroud to reduce the pump thrust.

Impeller Housing...

The impeller housing fits around the outside of the impellar vanes and provides a means of renewing the impeller running clearances.

Wearing Rings... (as required)

Replaceable rings provide renewable close running clearances between the impeller back shroud and the diffuser hub, and are supplied to reduce the pump axial thrust.

Suction Bell...

The suction bell is fitted to the lower end of the impeller housing. The diameter of the bell entrance is selected to provide a smooth and undistorted flow to the impeller inlet.

Diffuser Bowl...

The lower flange of the diffuser bowl bolts to the impeller housing and the upper flange of the lower column pipe. It is designed so that the diffuser bowl, impeller housing, suction bell, and rotating parts are removable as a complete assembly. Smooth curved diffuser vanes above the impeller straighten the flow from the impeller. The hub at the top of the diffuser is machined to receive the lower bearing housing.

Column Pipe...

The column pipe is flanged and bolted to the diffuser elbow or discharge deflector. Where the overall length of the pump required an intermediate bearing or bearings, the column pipe is made in a number of sections to provide sufficient bearing spiders (which are an integral part of the fabricated column pipe) to support the intermediate guide bearings.

Discharge Elbow...

Pullout Construction.

The column pipe is bolted to the discharge deflector. The top flange of the column pipe supports the weight of the pullout section and mates with the discharge elbow to provide a seal between the discharge and sump.

Non Pullout Construction.

The column pipe is bolted directly to the pit plate of the discharge elbow, the pit plate being designed to support the weight of the pump unit.

Both Types of Construction.

The discharge nozzle can be positioned above or below the main operating floor to suit the customer's piping configuration.

The discharge connection can be provided with either flanged or plain end. The plain end can be arranged to match the customer's piping for either a sleeve type coupling or weld end.

NOTE. On the below base discharge configuration a support column may be provided between the pit plate and the top of the discharge elbow depending on the pump size and/or setting of the discharge nozzle below the main floor.

DESCRIPTION TYPE SAFV

Motor Stand...

The motor stand is designed to support and properly locate the driver. The lower cover plate is bolted to support column or discharge elbow and seals against discharge pressure. Access openings are provided to service the stuffing box and adjustable driver coupling.

Shaft...

The pump, intermediate and upper shafts are of ample size to transmit the maximum required power and to operate well below the first critical speed. The pump shaft is accurately machined, and the impeller is positioned on the shaft with a split thrust ring fitted between a groove in the shaft and a recessed retainer bolted to the front of the impeller. Where intermediate shafts are furnished, sleeve type couplings are provided.

Shaft Tube...

The shaft tube protects the shaft from the pumpage and provides a passage for clean water to lubricate the bearings. The shaft tube is made up in several sections and is held in place by by a slip fit between the diffuser bearing housing, the shoulder on the column spider suppor supports and the lower end shoulder of the stuffing box.

Shaft Sleeves...(as required)

Hardened shaft sleeves can be provided to protect the shaft where it basses through the bearings and stuffing box.

Bearings...

The pump and intermediate bearings on the standard pump are the cutless rubber type. Other suitable bearing materials are available on request. On the pump shaft the impeller is supported with a lower bearing located in the center hub of the suction bell and upper bearing in the diffuser bowl hub. The intermediate shafts are supported by similar bearings positioned by the bearing support spiders at the top flange of each column pipe.

Stuffing Box...

The upper shaft is sealed as it passes through the top plate by a stuffing box designed to reduce the friction and prevent excessive wear and leakabe. The packing is held in place by a gland and equipped with a lantern ring. The gland is split to simplify packing replacement.

Coupling...

Pump/Driver Coupling.

A rigid, flanged adjustable coupling connects the pump and drive. The driver half of the coupling is driven by a key and is held in position by a thrust ring/groove arrangement. The pump shaft is keyed to the pump half coupling is is vertically adjustable by means of a threaded nut between the coupling halves. Combined pump thrust and weight of all rotating parts is carried on the motor thrust bearing.

Pump and Intermediate Shaft Couplings.

The pump and intermediate shaft couplings are of the sleeve type keyed to transmit the necessary torque and are positioned axially with a split grooved ring fitted to both shaft ends and designed to transmit the combined pump thrust and weight of pump rotating parts.

Lubrication

All bearings in the pump including the lower bearing are lubricated by one connection. The lubricant is injected at the stuffing box, passes through the intermediate bearings, enters the rifled drilled pump shaft at the diffuser bowl and passes through to flush and lubricate the lower bearing. No external piping connections are required. Clean water should be provided from an outside source, non-corrosive and free from suspended solids.

Drivers...(normally supplied by customer)

Drivers must have ample thrust capacity to carry the combined pump thrust and weight of all rotating parts.

TECHNICAL DATA TYPE SAFV

STANDARD MATERIAL CLASSES

Part	Class B (Fresh Water)	Class AF (Brackish or Sea Water)	Class F (Brackish or Sea Water)
Column Pipe	Steel	Low Ni-Cast Iron ②	316L Stainless Steel
Discharge Deflector	Steel	Low Ni-Cast Iron ②	316L Stainless Steel
Support Column	Steel	Low Ni-Cast Iron ②	316L Stainless Steel
Discharge Elbow	Steel	Low Ni-Cast Iron ②	316L Stainless Steel
Shaft Tube	Steel	18-8	18-8
Impeller	Bronze	CF8M	CF8M
Impeller Housing	Steel	316L Stainless Steel	316L Stainless Steel
Pump Shaft	Chrome Steel	316 Stainless Steel	316 Stainless Steel
Intermediate Shaft	Steel	316 Stainless Steel	316 Stainless Steel
Upper Shaft	Steel	316 Stainless Steel	316 Stainless Steel
Bearings	Rubber ①	Rubber ①	Rubber ①
Sleeves (if required)	Chrome Steel	Monel	Monel
Shaft Coupling (intermediate)	Steel	18-8	18-8
Adjustable Coupling (driver)	Steel	Steel	Steel
Gland	Bronze	Bronze	Bronze
Lantern Ring	Bronze ④	Bronze ④	Bronze ④
Internal Bolting Fastener Fasteners (wetted)	Steel	18-8	18-8
External Bolting Fasteners (non-wetted)	Steel	Steel ③	Steel ③
Driver Stand	Steel	Steel	Steel
Diffuser Bowl	Steel	Low Ni-Cast Iron ②	316L Stainless Steel
Suction Bell	Steel	Low Ni-Cast Iron ②	316L Stainless Steel
Bearing Housing	Steel	316L Stainless Steel	316L Stainless Steel
Wear Rings-Impeller	Bronze	Low Ni-Cast Iron ②	17-4
Wear Rings-Diffuser	Bronze	Low Ni-Cast Iron ②	18-8

① Other materials can be supplied, consult Portland.
② Ni Resist can be substituted at additional cost.
③ Cadmimum Plated.
④ Nylon may be substituted.

BINGHAM TYPE SAFV

ABOVE BASE DISCHARGE - NON PULLOUT CONSTRUCTION

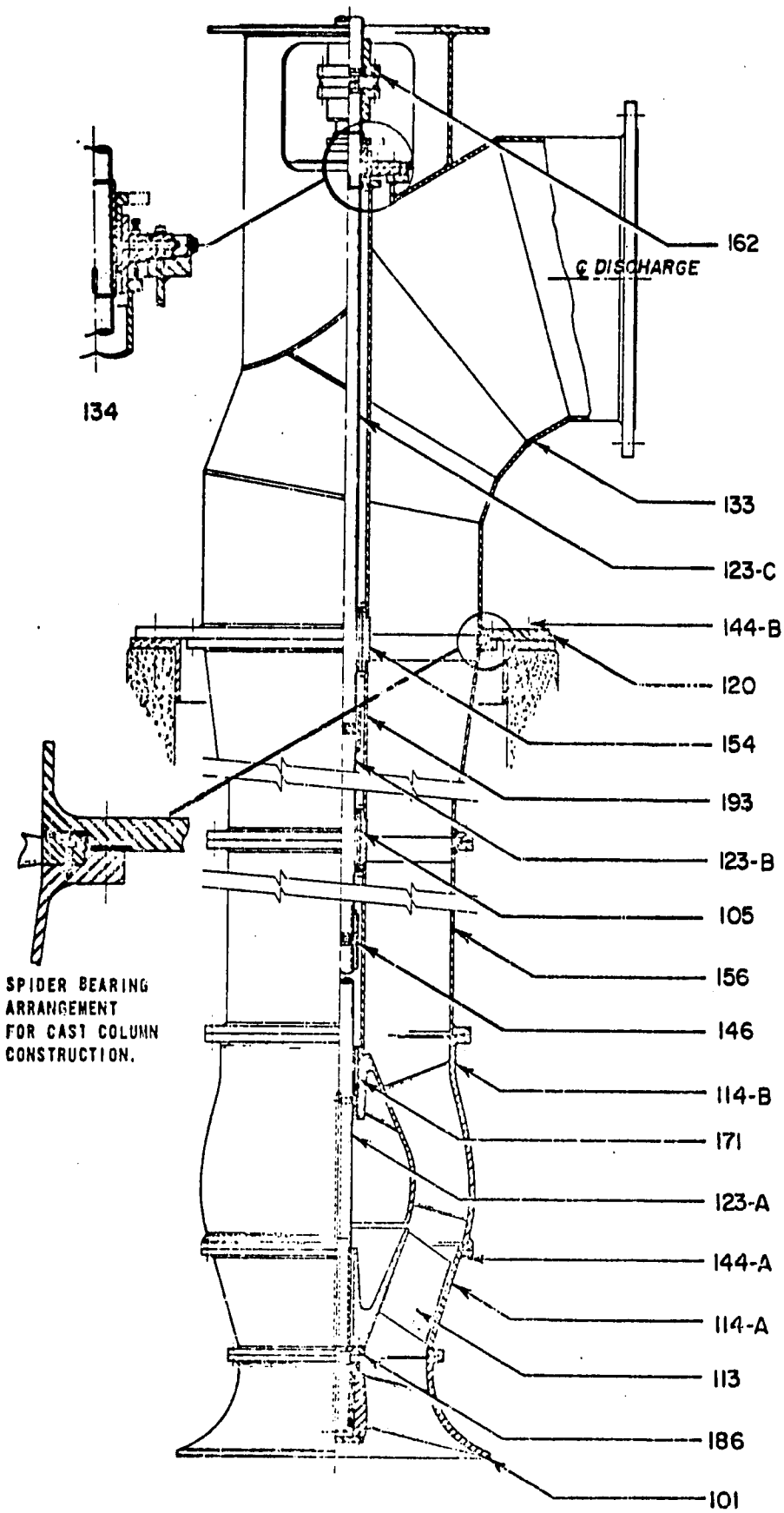

Part No.	Description
101	Suction Bell
105	Bearing
113	Impeller
114-A	Impeller Housing
114-B	Diffuser Bowl
120	Pit Plate
123-A	Pump Shaft
123-B	Intermediate Shaft
123-C	Upper Shaft
133	Discharge Elbow
134	Stuffing Box Assembly
144-A	Fastener (Wetted)
144-B	Fastener (Non-Wetted)
146	Shaft Coupling
154	Bearing Housing
156	Column Pipe
162	Adjustable Coupling
171	Sleeve
186	Thrust Ring
193	Shaft Tube

Drawing No. WP-451

BINGHAM TYPE SAFV

BELOW BASE DISCHARGE - NON PULLOUT CONSTRUCTION

IMPORTANT Always refer to pump serial and drawing numbers in communications.

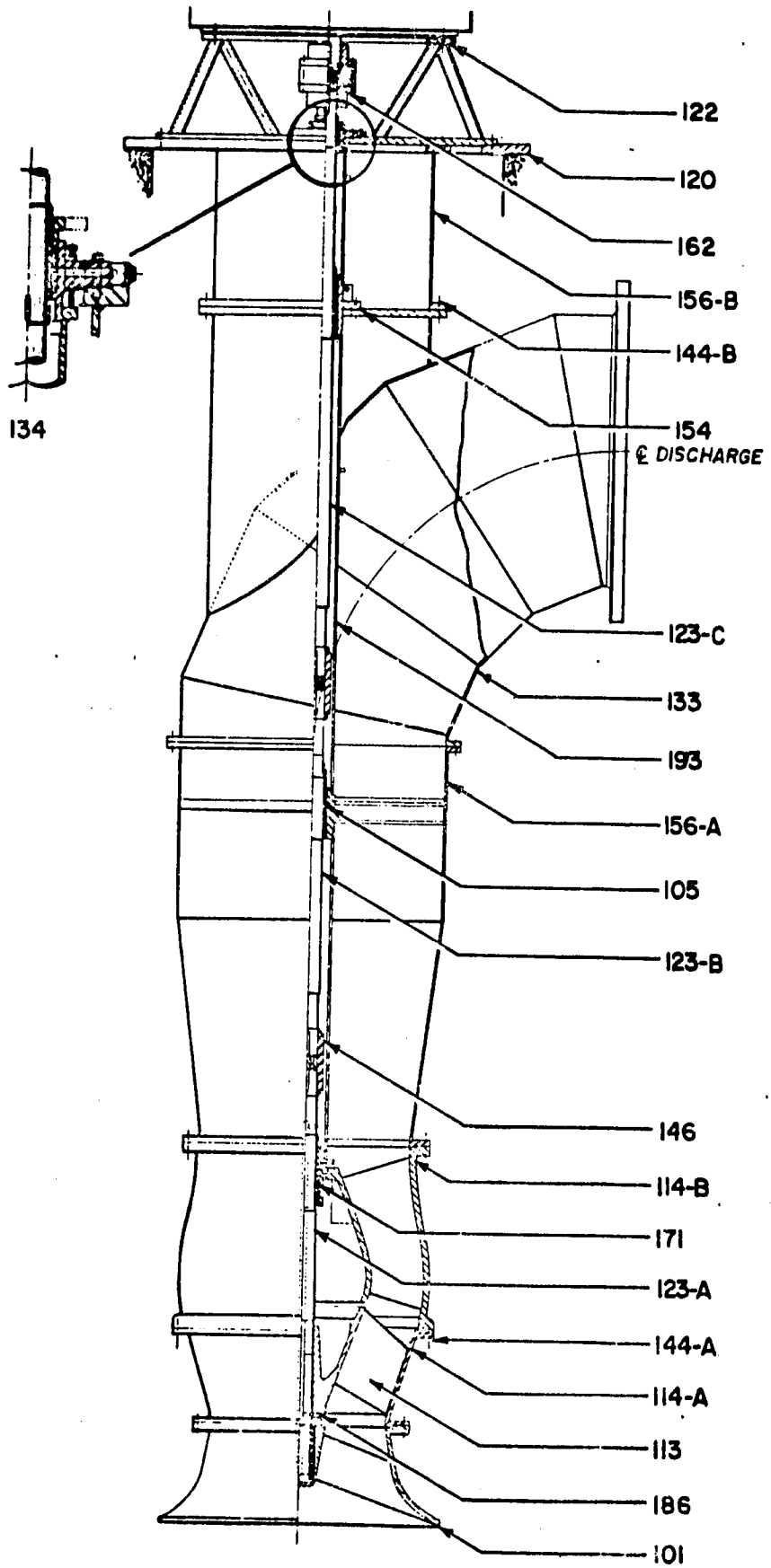

PART NO.	DESCRIPTION
101	Suction Bell
105	Bearing
113	Impeller
114-A	Impeller Housing
114-B	Diffuser Bowl
120	Pit Plate
122	Motor Stand
123-A	Pump Shaft
123-B	Intermediate Shaft
123-C	Upper Shaft
133	Discharge Elbow
134	Stuffing Box Assembly
144-A	Fastener (Wetted)
144-B	Fastener (Non-Wetted)
146	Shaft Coupling
154	Bearing Housing
156-A	Column Pipe
156-B	Support Column
162	Adjustable Coupling
171	Sleeve
186	Thrust Ring
193	Shaft Tube

Drawing No. WP-455

IMPORTANT Always refer to pump bottom and drawing numbers in correspondence.

OUTLINE DIMENSIONS TYPE SAFV

PRELIMINARY OUTLINE - NON-PULLOUT CONSTRUCTION.

Series 12.01
DIMENSIONS
January 18, 1974

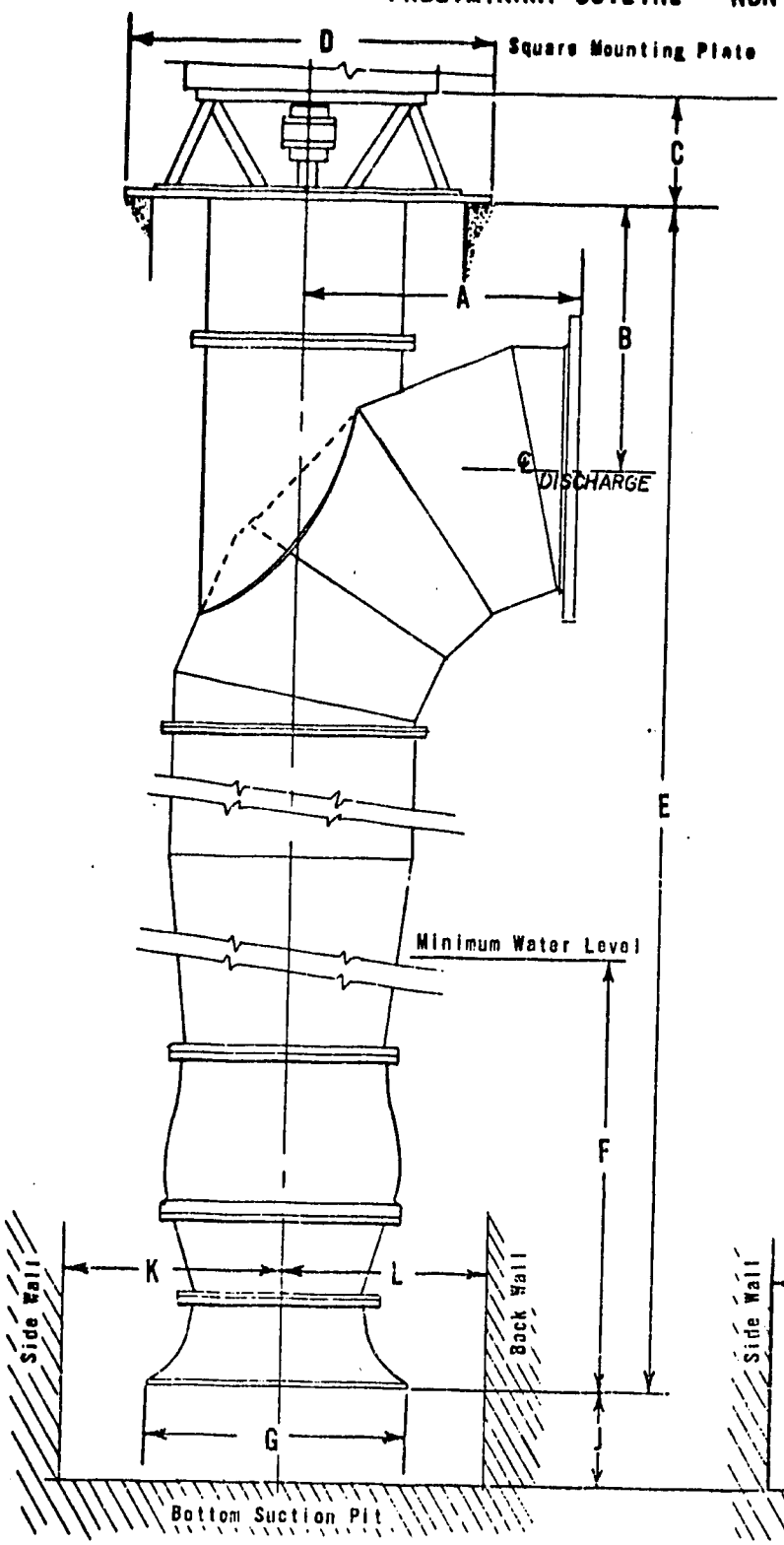

BELOW BASE DISCHARGE

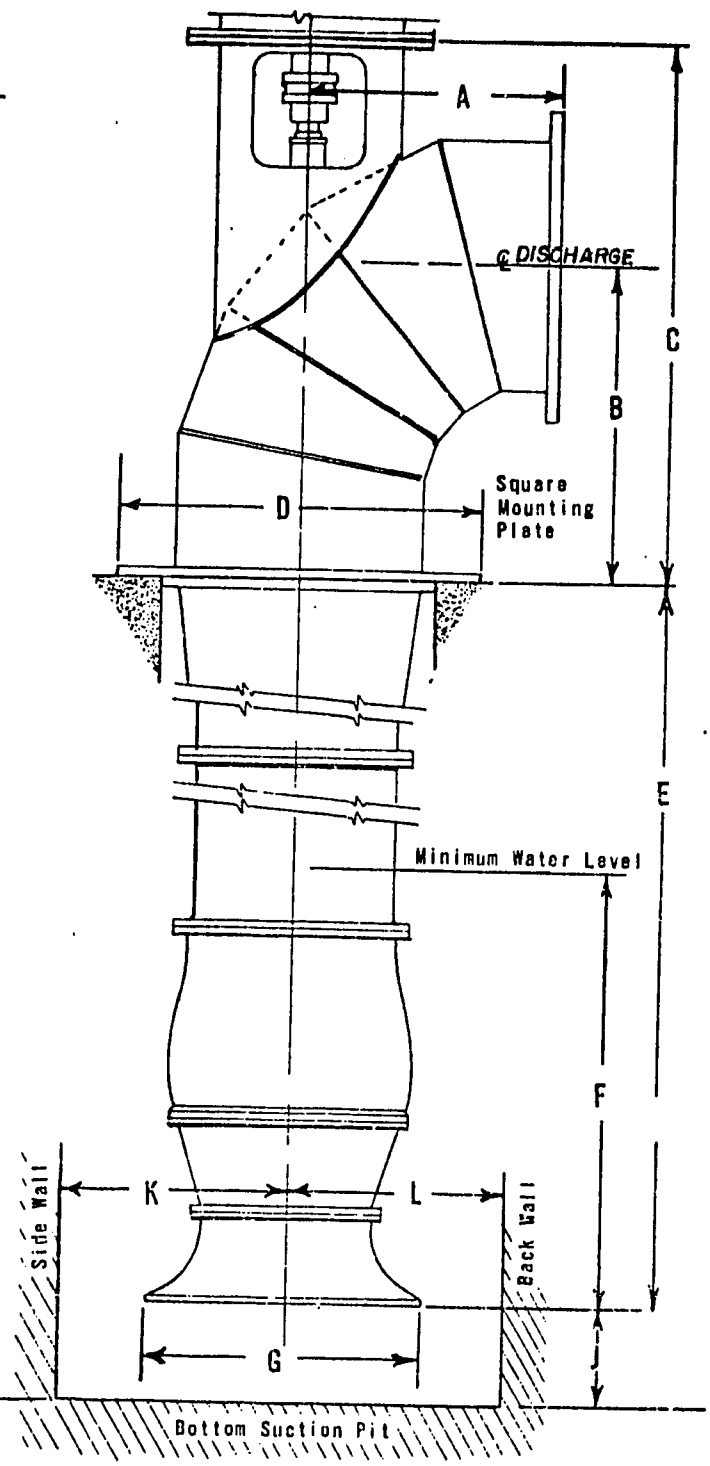

ABOVE BASE DISCHARGE

CONDITIONS

Capacity	US. GPM.
Head	FT.
Speed	RPM.
Customer	
Service	
Reference Number.	

DIMENSIONS

'A'	'G'
'B'	'J'
'C'	'K'
'D'	'L'
'E'	Discharge Dia.
'F'	

Drawing No. WP-456

OUTLINE DIMENSIONS TYPE SAFV

PRELIMINARY OUTLINE - PULLOUT CONSTRUCTION

IMPORTANT Always refer to Pump serial and drawing numbers in communications.

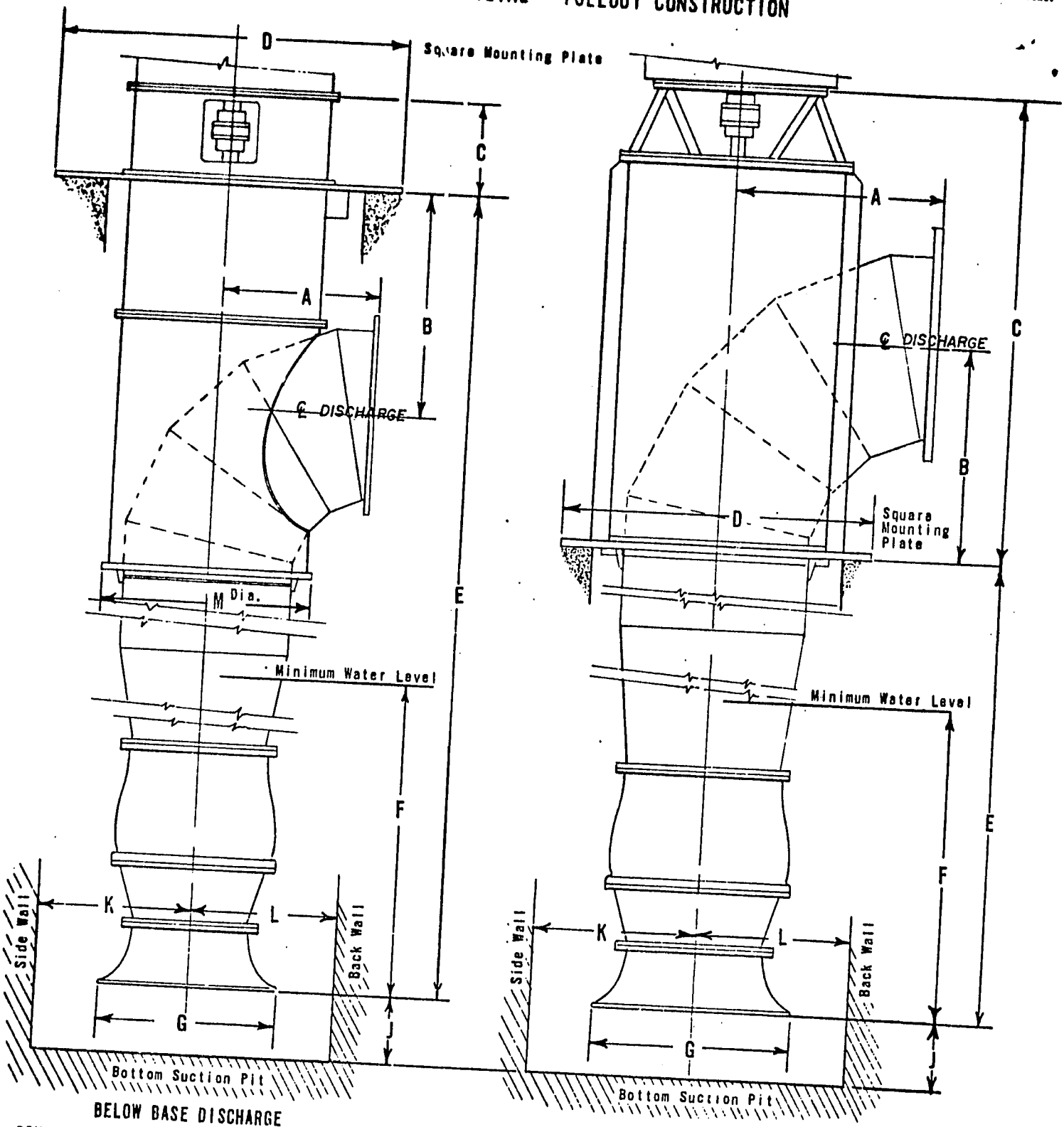

BELOW BASE DISCHARGE

ABOVE BASE DISCHARGE.

CONDITIONS

Capacity	US. GPM.
Head	FT.
Speed	RPM.
Customer	
Service	
Reference Number.	

DIMENSIONS

'A'	'G'
'B'	'J'
'C'	'K'
'D'	'L'
'E'	'M'
'F'	Discharge Dia.

Drawing No. WP-457

Binghamton-Willamette Company

PARTIAL LIST OF CONDENSER COOLING WATER PUMP INSTALLATIONS.

Section 1.03 Page
INSTALLATION LIST
January 10, 1973

YEAR	SERIAL NUMBER	CUSTOMER & INSTALLATION	QTY.	SIZE & TYPE	CAPACITY (GPM)	HEAD (FT)	HP.	PUMPAGE
1951	G 66-5127/8	PHILADELPHIA ELECTRIC COMPANY	2	57 X 66 SAFV	82,800	25	700	WATER
1953	E 4782	U.S. ARMY (PLANT #2)	2	54 X 60 SAFV	90,000	30	800	WATER
1953	G 66-9648	CITY OF OAKLAND	4	54 X 66 SAFV	112,250	36	1,175	WATER
1955	WG 72-18871	CONSOLIDATED EDISON COMPANY (ASTIRIA #3)	2	72 X 72 SAFV	122,000	17.4	700	WATER
1956	WG 60-18556	VIRGINIA ELECTRIC COMPANY	2	54 X 60 SAFV	55,000	16	350	WATER
1957	WG 72-29582	CONSOLIDATED EDISON COMPANY	2	72 X 72 SAFV	107,000	17.5	600	WATER
1957	WG 60-24720	VIRGINIA ELECTRIC COMPANY	2	54 X 60 SAFV	55,000	16	350	WATER
1958	WG 72-21244	CONSOLIDATED EDISON COMPANY (AUTHUR KILL)	2	72 X 72 SAFV	122,000	17.4	700	WATER
1958	G 66-32126	FLORIDA POWER & LIGHT COMPANY	2	57 X 66 SAFV	80,000	23	700	WATER
1960	WG 72-38105	CONSOLIDATED EDISON COMPANY (ASTORIA #5)	2	72 X 72 SAFV	107,000	17.5	600	WATER
1961	WG 66-44527	FLORIDA POWER CORPORATION (BARTOW UNIT #3)	2	54 X 66 SAFV	85,000	19	600	WATER
1961	WG 72-42067	CONSOLIDATED EDISON COMPANY (RAVENSWOOD #2)	2	72 X 72 SAFV	107,000	17.5	600	WATER
1961	WG 72-39541	CONSOLIDATED EDISON COMPANY (RAVENSWOOD #1)	2	72 X 72 SAFV	107,000	17.5	600	WATER
1964	863-50188	HOUSTON LIGHTING & POWER COMPANY (BACLIFF STATION UNITS #1 & 2)	6	54 X 66 SAFV	81,330	32.5		WATER
1965	550-50235	DUKE POWER COMPANY (PLANT MARSHALL UNITS #3 & 4)	6	57 X 66 SAFV	111,000	40	1,500	WATER
1965	909-45261	DUKE POWER COMPANY (MARSHAL UNITS #1 & 2)	2	54 X 60 SAFV	90,000	39.6	1,250	WATER
1965	550-50244	CONSOLIDATED EDISON COMPANY (ARTHUR - KILL STATION)	2	60 X 72 SAFV	105,000	19.76	700	WATER

Bingham-Willamette Company

PARTIAL LIST OF CONDENSER COOLING WATER PUMP INSTALLATIONS.

YEAR	SERIAL NUMBER	CUSTOMER & INSTALLATION	QTY.	SIZE & TYPE	CAPACITY (GPM)	HEAD (FT)	HP.	PUMPAGE
1966	550-50254	CITY OF AUSTIN (DECKER CREEK POWER STATION)	2	60 X 78 SAFV	116,000	23	900	WATER
1966	550-50273	GEORGIA POWER COMPANY (PLANT HARLLEE BRANCH UNIT #4)	2	60 X 72 SAFV	120,450	24	900	WATER
1966	550-50252	DAIRYLAND POWER COOPERATIVE	2	54 X 66 SAFV	90,000	46	1,500	WATER
1966	550-50276	FLORIDA POWER CORPORATION (CRYSTAL RIVER PLANT #2)	4	54 X 66 SAFV	82,000	19	500	WATER
1967	550-50310	H. B. ZACHRY COMPANY SAN ANTONIO, TEXAS (VICTOR BRAUNIG POWER PLANT UNIT #3)	3	54 X 60 SAFV	78,000	26	600	WATER
1967	550-50296	DUKE POWER COMPANY (OCONEE UNITS #1 & 2)	8	80 X 96 SAFV	177,000	28.7	1,750	WATER
1967	550-50337	VIRGINIA ELECTRIC & POWER (UNITS #1 &2)	8	80 X 96 SAFV	210,000	28	2,000	WATER
1967	550-50319	TAMPA ELECTRIC COMPANY (BIG BEND STATION UNITS #1 & 2)	4	60 X 72 SAFV	120,000	26	900	SALT WATER
1968	550-50376	TEXAS POWER & LIGHT COMPANY (TRADING HOUSE CREEK #2)	2	57 X 72 SAFV	114,250	35	1,250	WATER
1968	550-50357	INDUSTRIAL GENERATING COMPANY (BIG BROWN STATION UNIT #1 & 2)	6	57 X 72 SAFV	113,300	38	1,250	WATER
1968	550-50335	GEORGIA POWER COMPANY (PLANT HAMMOND UNIT #4)	2	54 X 66 SAFV	90,500	28.6	800	WATER
1968	550-50394	SOUTH CAROLINA ELECTRIC & GAS COMPANY (UNIT #2)	2	51 X 60 SAFV	85,000	55	1,500	WATER
1968	550-50361	SOUTH CAROLINA ELECTRIC & GAS COMPANY (UNIT #1)	2	51 X 60 SAFV	85,000	55	1,500	WATER
1968	550-50384	PHILADELPHIA ELECTRIC COMPANY (PEACH BOTTOM ATOMIC POWER STATION UNITS #2 & 3)	6	90 X 102 SAFV	250,000	25	2,000	WATER
1968	550-50360	LOUISIANA POWER & LIGHT COMPANY (NINEMILE POINT STEAM ELECTRIC STATION)	3	60 X 78 SAFV	141,500	44	2,000	WATER

Bingham-Willamette Company

PARTIAL LIST OF CONDENSER COOLING WATER PUMP INSTALLATIONS.

YEAR	SERIAL NUMBER	CUSTOMER & INSTALLATION	QTY.	SIZE & TYPE	CAPACITY (GPM)	HEAD (FT)	HP.	PUMPAGE
1968	550-50321	DUKE POWER COMPANY (OCONEE UNIT #3)	4	80 X 96 SAFV	177,000	28.7	1,750	WATER
1968	550-50386	OHIO EDISON COMPANY (W. H. SAMMIS PLANT UNIT #7)	2	72 X 96 SAFV	193,500	38.5	2,500	WATER
1968	550-50374	PUERTO RICO WATER RESOURCES AUTHORITY (AGUIRRE STATION UNITS #1 & 2)	3	60 X 72 SAFV	113,100	28.5	1,000	WATER
1968	550-50374	PUERTO RICO WATER RESOURCES AUTHORITY (SOUTH COAST STATION UNITS #5 & 6)	5	60 X 72 SAFV	105,598	28.5	1,000	WATER
1968	550-50370	ALABAMA POWER COMPANY (BARRY STEAM PLANT)	2	60 X 78 SAFV	133,500	29	1,250	WATER
1969	550-50400	ALABAMA POWER COMPANY (GORGAS STEAM PLANT)	2	60 X 79 SAFV	146,000	29	1,500	WATER
1969	550-50409	ARKANSAS POWER & LIGHT COMPANY (ARKANSAS NUCLEAR ONE)	4	80 X 96 SAFV	191,000	20	1,250	WATER
1969	550-50433	PHILADELPHIA ELECTRIC COMPANY (PEACH BOTTOM ATOMIC POWER STATION UNITS #2 & 3)	3	80 X 96 SAFV	292,000	52	5,000	WATER
1970	550-50451	LOUISIANA POWER & LIGHT COMPANY (NINEMILE POINT STEAM ELECTRIC STATION)	3	60 X 78 SAFV	141,500	47.8	2,250	WATER
1970	550-50477	SOUTH CAROLINA ELECTRIC & GAS COMPANY (ARTHUR WILLIAMS STATION UNIT #1)	3	60 X 72 SAFV	123,500	38	1,500	WATER
1970	550-50445	ORANGE & ROCKLAND UTILITIES (BOWLINE POINT PLANT UNIT #1)	3	70 X 78 SAFV	128,000	35	1,500	WATER
1971	550-50483	ORANGE & ROCKLAND UTILITIES (BOWLINE POINT PLANT UNIT #2)	3	70 X 78 SAFV	128,000	35	1,500	WATER
1972	220088/95	DUKE POWER COMPANY (BELEWS CREEK UNITS #1 & 2)	8	66 X 78 SAFV	131,250	36.3	1,500	WATER
1972	220141/42	TAMPA ELECTRIC COMPANY (BIG BEND STATION UNIT #3)	2	60 X 72 SAFV	120,500	36		SALT WATER

Bingham-Willamette Company FACTORIES: PORTLAND, OREGON • SHREVEPORT, LOUISIANA • VANCOUVER, B.C. CANADA

•
BLACVEATCH KSC

BINGWILL A PTL
JUNE 12, 1974
ATTN LLOYD SVOBODA
SEMARANG POWER PLANT
FINAL FIRM PRICE FOR CIRCULATION WATER PUMPS CONTRACT 6104-M-12A
WITH NO ESCALATION IS $649,750. SHIPMENT CAN BE MADE IN 21 MONTHS.
FOB SHIP. JACK BATTLE WILL BE IN KANSAS CITY BY 3 PM TODAY AND
WILL BE AVAILABLE FOR A MEETING.
DICK PITMAN FOR JACK BATTLE
BINGWILL A PTL
•
BLACVEATCH KSC
T

DYNMAC CORPORATION
Dynamic Machinery
2210 WEST 75th • PRAIRIE VILLAGE, KANSAS 66208 • A.C. 913 362 9636

June 17, 1974

File: BKC-703, PE-9630-A

Black & Veatch International
Box 8405
Kansas City, Missouri 64114

Attention: Lloyd J. Svoboda

Reference: Bingham Willamette Company Proposal for Circulating Water Pumps
Semarang Steam Power Plant Units 1 & 2
Black & Veatch Specification 6104-M-12A

Gentlemen:

This will confirm our telex of June 12, 1974 and our final firm price of the circulating water pumps. Our total bid on this contract will be $649,750.00. This price is not subject to escalation.

We propose to ship this equipment in twenty one (21) months from date of order and the liquidated damages would not take effect until that date and then only if the delay of this equipment jeopardizes the start up operation of your plant. The Bingham-Willamette engineering load is so heavy at this time that we will be unable to furnish you with drawings for approximately six months.

We are attaching a list of our exceptions and clarifications on this contract.

The price for Item C.2.2 will be $30,000.00
The price for Item C.2.3.1 will be $310.00
The price for Item C.2.3.2 will be $60.00
The price for Item C.2.3.3 will be 20,750 rupiahs
The price for Item C.2.3.4 will be $2,130.00 and immediately following should be the amount of 166,000 rupiahs.

Our terms of payment are as follows, based on receipt of an order in June, 1974. All percentages are based on the total contract price: 15% September 1974, 15% December 1974, 15% March 1975, 15% June 1975, 30% on shipment or when equipment is ready for shipment, 10% not to exceed 24months from date of shipment.

Yours very truly,

John L. Battle

JLB:bk
cc: Bingham-Portland (Pitman)
Dynmac - Tulsa

BEST AVAILABLE COPY

EXCEPTIONS AND CLARIFICATIONS
SEMARANG STEAM POWER PLANT UNITS 1 & 2
BLACK & VEATCH
SPECIFICATION 6104-M-12A

1. Certain exceptions in materials for the circulating water pumps have been taken to increase reliability and reduce the cost to the customer.

2. Paragraph GC. 15 Suspension of Work

   Bingham Willamette Company will agree to a thirty day waiting period for proposed contract changes provided this takes place in the first forty five days of the contract.

3. Freights are CIF from Portland, Oregon. Rates are not firm in any way and are only an estimation.

4. The motor manufacturer will conduct standard commercial test per NEMA Standard at 60 cycle. All other tests will be charged as an extra at the cost involved.

Accepted
20 June 74

John L. Battle

JLB:bk
June 13, 1974

cc: Bingham - Portland
Dynmac - Tulsa

BEST AVAILABLE COPY

•
BLACVEATCH KSC

DYNMAC PRVE
6-16-74
ATTEN LLOYD SVOBODA
REF SEMARANG STEAM POWER PLANT
WE WILL OFFER A PRICE OF $635,000.00 FIRM FOR THE
CIRCULATING WATER PUMPS
THIS PRICE IS NOT SUBJECT TO ESCALATION HOWEVER THE MAXIMUM LIQUIDATE
DAMAGES WILL BE 5 PERCENT
AS YOU KNOW I AM THREE MINUTES FROM YOUR OFFICE
I AM MOST EAGER TO DROP BY AND PICK UP THIS ORDER
THSNK YOU
JACK BATTLE
•
BLACVEATCH KSC

DYNMAC PRVE

0

CONTRACT AGREEMENT

THIS CONTRACT AGREEMENT, made and entered into this _____ of _____, 1974, by and between the PERUSAHAAN UMUM LISTRIK NEGARA, Party of the First Part and hereinafter called "Owner", and Bingham Willamette, Division of Guy F. Atkinson Company, a Nevada Corporation with its principal office in San Francisco, California, Party of the Second Part and hereinafter called "Contractor".

WITNESSETH:

THAT WHEREAS, the Owner has caused to be prepared specifications, plans and other contract documents for the work as herein specified; and

WHEREAS, the said Contractor has submitted to the Owner a tender in accordance with the terms of the Contract Agreement; and

WHEREAS, the Owner has determined and declared the aforesaid Contractor has submitted the lowest evaluated proposal for the said work and has duly awarded to the said Contractor a contract therefor, for the sum or sums named in the Contractor's Proposal, a copy thereof being attached to and made a part of this Contract Agreement;

NOW, THEREFORE, in consideration of the compensation to be paid to the Contractor and of the mutual agreements herein contained, the parties to these presents have agreed and hereby agree, the Owner for itself and its successors, and the Contractor for itself, himself, or themselves, or its, his or their successors and assigns, or its, his or their executors and administrators, as follows:

ARTICLE I. That the Contractor shall furnish fas U.S.A. port of shipment; furnish ocean freight (including port charges for handling, loading and unloading) ocean cargo insurance and surcharges and deliver to the Port of Semarang, Indonesia, circulating water pumps and motor drives (for Units 1 and 2) and spare parts as specified in accordance with the provisions of which are attached and made a part hereof, and shall execute and complete all work included in and covered by the Owner's official award of this Contract Agreement to the said Contractor.

ARTICLE I. That the Owner shall pay to the Contractor for furnishing equipment and materials and spare parts designated in the foregoing Article I as embraced in this Contract Agreement, and the Contractor will accept as full compensation therefor, the sum (subject to adjustments as provided by the contract) of SIX HUNDRED THIRTY-FIVE THOUSAND DOLLARS ($635,000.00) as the Base Contract Price including specified spare parts and SIX THOUSAND DOLLARS ($6,000.00) for additional spare parts; payment to be made in United States currency in the manner provided in the contract documents attached hereto.

(PLN 6104
(SURFACE CONDENSERS AND AUXILIARY EQUIPMENT M-12A)
(CIRCULATING WATER PUMPS)
062174

That the Owner shall pay to the Contractor for administrative expenses the sum of TWO HUNDRED EIGHTY-NINE THOUSAND THREE HUNDRED EIGHTY-FOUR RUPIAHS (Rp 289,384 IND). Administrative expenses shall be paid by the Owner to the Contractor from the budget of Proyek Survey Dan Perencanaan Umum Kelistrikan (S.P.U.K.), Jakarta, immediately upon signing of the Contract.

ARTICLE III. That the Owner shall pay to the Contractor for furnishing the actual cost of ocean freight (including port charges for handling, loading, and unloading), ocean cargo insurance and surcharges on equipment and materials and spare parts designated in the foregoing Article I from the U.S.A. port of shipment to the Port of Semarang, Indonesia, and the Contractor will accept as full compensation therefor the estimated sum of THIRTY THOUSAND DOLLARS ($30,000.00); subject to final adjustment to actual cost at the conclusion of the shipment of all required materials and equipment and spare parts; payment to be made in United States currency in the manner provided in the contract documents attached hereto.

ARTICLE IV. That the Contractor shall furnish technical field services upon request by the Owner and that the Owner shall pay to the Contractor for furnishing such services, and the Contractor will accept as full compensation therefor, payment in accordance with the following schedule:

Daily rate for each technical field representative based upon six 8-hour days per week

THREE HUNDRED TEN DOLLARS ($310.00)

Living costs and other expenses in Indonesia for each technical field representative at actual cost but not to exceed the following per diem:

TWENTY THOUSAND SEVEN HUNDRED FIFTY RUPIAHS (Rp 20,750 IND)

Round trip economy transportation including living expenses, and expenses incidental to travel, to and from Semarang, Indonesia, at actual cost.

The total cost for the service representative is estimated to be TWENTY-TWO THOUSAND DOLLARS ($22,000.00 USA) and ONE MILLION FIVE HUNDRED THOUSAND RUPIAHS (Rp 1,500,000 IND)

wd.

DEPARTEMEN KEUANGAN REPUBLIK INDONESIA
DIREKTORAT JENDERAL PAJAK
INSPEKSI PAJAK . JAKARTA. SELATAN .DUA.-.

SURAT KUASA UNTUK MENYETOR BEA DAN DENDA BEA METERAI

Inspeksi Pajak . Jakarta Sel.Dua.
Nomor N.652.059. V/74.

Nama, jabatan dan tempat tinggal wajib bea atau pemohon.	G.F. C O C K R E L L. Representative dari Bingham Williamette Co. Jalan Nuri No.11 - Kebayoran Lama JAKARTA - SELATAN.-	Jumlah bea dan denda meterai yang terhutang
Keterangan mengenai tanda yang harus dikenakan - bea meterai dengan menyebutkan dasar pengenaannya dan besarnya tarip.	Surat perjanjian pemborongan No. ... Tgl. ..... antara sub I dengan P.S. Direktur Pembangunan P.L.N. Jl.Sunan Ngampel No.1 mengenai jual-beli peralatan dari Luar Negeri - Circulating Water Pumps dengan ni- lai sebesar (US.$.693.000 x Rp.415.-) +Rp.1.789.384.- = Rp.289.384.384.-- Bea Meterai cfm.ps.56 ABM 1921 ditetapkan 1 o/oo = Tindasan lainnya dibuat rangkap 14 a Rp.25.-- =	Rp.289.400.-- " 350.--
Keterangan mengenai denda dengan menyebutkan - dasar pengenaannya.	-8-JUL-74 0050-4 74 652059• — V IJ••289.750.00	
HARUS DIBAYAR : 12 - Juli - 1974.	Jakarta, 5 - Juli - 1974. A.n. Kepala Inspeksi Pajak Jakarta Sel.Dua. Kasie P.T.L. (Drs. Ny. Sri Subiati).-	Jumlah: Rp.289.750.-- (Dua ratus delapan puluh-sembilan ribu tujuh ratus lima puluh rupiah).

TINDASAN

PEMBAYARAN

PERHATIAN
TANDA, UNTUK [illegible] DITAUTKAN.
BARU [illegible] SESUDAH
[illegible] DIBAYAR LUNAS DI KANTOR [illegible] NEGARA /
KANTOR [illegible] GIRO POS (pal. 5 "ABM 1921")

Bentuk KP.BM.3

ARTICLE V. That time of delivery is of the essence of this Contract Agreement, and that the Contractor shall proceed with the specified work and shall conform to the schedule specified in Section 1A of the specifications.

ARTICLE VI. That in the event the Contractor shall fail to deliver the specified equipment and materials within the time period stipulated in the foregoing Article V, the Contractor shall be liable to the Owner for the amount of THREE HUNDRED SIXTY DOLLARS ($360.00), as liquidated damages and not as a penalty, for each calendar day of delay in delivery of the equipment and materials which causes a delay in achieving commercial operation or causes the construction contractor to mobilize in addition to his normal construction to achieve commercial operation for all units in accordance with the provision of Article GC.34 of the General Conditions; that said liquidated damages shall not exceed five per cent of the Base Contract Price as stipulated in the foregoing Article II.

IN WITNESS WHEREOF, the parties hereto have executed this Contract Agreement as of the day and year first above written.

OWNER

PERUSAHAAN UMUM LISTRIK NEGARA

(Seal)

Attest: _____ By: _____

CONTRACTOR

BINGHAM WILLAMETTE COMPANY
a Division of Guy F. Atkinson Company

(Seal)

Attest: _____
Assistant Secretary

By: _____
W. E. Tharp, Executive Vice President and General Manager

(PLN 6104)
(SURFACE CONDENSERS AND AUXILIARY EQUIPMENT M-12A)
(CIRCULATING WATER PUMPS)
062174

BASIS OF CONTRACT AWARD

The Contract Award is based on the Specifications and Documents for Surface Condensers and Auxiliary Equipment Item C.2 Circulating Water Pumps Issued 30 November 1973; Addendum 1 dated 14 January 1974; Bingham Willamette Company Proposal PE-9630 dated 8 May 1974; Bingham Willamette Company Supplemental Proposal letter dated 17 June 1974; and Bingham Willamette Telexes dated 12 June 1974 and 18 June 1974.

The total contract price shall be established as follows:

C.2 Circulating Water Pumps Equipment and Materials (Refer to Bingham Willamette Company Proposal PE-9630)
Circulating Water Pumps and Motors
(including specific spare parts)

Base Contract Price	$635,000	
Additional Spare Parts	6,000	
Subtotal	$641,000	
Ocean freight, handling and insurance (Subject to adjustment)	30,000	
Service Representative	22,000	Rp 1,500,000 IND
Contractor Administrative expenses	--	Rp 289,384 IND
TOTAL CONTRACT PRICE	$693,000	Rp 1,789,384 IND

(PLN 6104
(SURFACE CONDENSERS AND AUXILIARY EQUIPMENT M-12A)
(CIRCULATING WATER PUMPS)
060874)

PERFORMANCE BOND

(See Instructions on reverse)

DATE BOND EXECUTED (Must be same or later than date of contract)
June 24, 1974

PRINCIPAL (Legal name and business address) (Contractor)
Bingham - Willamette Company, A Division of Guy F. Atkinson Company, a Nevada Corporation, 2800 N. W. Front Ave., Portland, Oregon U. S. A.

TYPE OF ORGANIZATION ("X" one)
☐ INDIVIDUAL ☐ PARTNERSHIP
☐ JOINT VENTURE ☒ CORPORATION

STATE OF INCORPORATION
Nevada

SURETY(IES) (Name(s) and business address(es))
Fidelity and Deposit Co. of Maryland
3005 First National Bank Tower
Portland, Oregon 97201 U. S. A.

PENAL SUM OF BOND			
MILLION(S)	THOUSAND(S)	HUNDRED(S)	CENT(S)
	207	900	00

CONTRACT DATE 6-24-74

CONTRACT NO. 6104- A - 12A

KNOW ALL MEN BY THESE PRESENTS, That we, the Principal and Surety(ies) hereto, are firmly bound to Perusahaan Umum Listrik Negara (hereinafter called PLN) in the above penal sum for the payment of which we bind ourselves, our heirs, executors, administrators, and successors, jointly and severally: *Provided*, That, where the Sureties are corporations acting as co-sureties, we, the Sureties, bind ourselves in such sum "jointly and severally" as well as "severally" only for the purpose of allowing a joint action or actions against any or all of us, and for all other purposes each Surety binds itself, jointly and severally with the Principal, for the payment of such sum only as is set forth opposite the name of such Surety, but if no limit of liability is indicated, the limit of liability shall be the full amount of the penal sum.

THE CONDITION OF THIS OBLIGATION IS SUCH, that whereas the Principal entered into the contract identified above;

NOW, THEREFORE, if the Principal shall:

(a) Perform and fulfill all the undertakings, covenants, terms, conditions, and agreements of said contract during the original term of said contract and any extensions thereof that may be granted by PLN, with or without notice to the Surety(ies), and during the life of any guaranty required under the contract, and shall also perform and fulfill all the undertakings, covenants, terms, conditions, and agreements of any and all duly authorized modifications of said contract that may hereafter be made, notice of which modifications to the Surety(ies) being hereby waived; and

(b) Pay to the Government of Indonesia the full amount of the taxes imposed by the Government of Indonesia which are collected, deducted, or withheld from wages paid by the Principal in carrying out the construction contract with respect to which this bond is furnished; then the above obligation shall be void and of no effect.

IN WITNESS WHEREOF, the Principal and Surety(ies) have executed this performance bond and have affixed their seals on the date set forth above.

PRINCIPAL			
Signature(s)	1. G. W. Wintz (Seal)	2. Betty A. Allen (Seal)	Corporate Seal
Name(s) & Title(s) (Typed)	1. G. W. Wintz, Division President	2. Betty A. Allen, Assistant Secretary.	

INDIVIDUAL SURETY(IES)		
Signature(s)	1. (Seal)	2. (Seal)
Name(s) (Typed)	1.	2.

CORPORATE SURETY(IES)				
SURETY A	Name & Address: Fidelity and Deposit Co. of Maryland, 3005 First Nat'l Bank Tower, Portland, Ore.		STATE OF INC.	LIABILITY LIMIT
Signature(s)	1. Richard W. Recob	2.		Corporate Seal
Name(s) & Title(s) (Typed)	1. Richard W. Recob, Attorney-in-fact	2.		

23-105

CORPORATE SURETY(IES) (Continued)

SURETY B	Name & Address		STATE OF INC	LIABILITY LIMIT	Corporate Seal
	Signature(s)	1	2		
	Name(s) & Title(s) (Typed)	1	2		
SURETY C	Name & Address		STATE OF INC	LIABILITY LIMIT	Corporate Seal
	Signature(s)	1	2.		
	Name(s) & Title(s) (Typed)	1	2		
SURETY D	Name & Address		STATE OF INC.	LIABILITY LIMIT	Corporate Seal
	Signature(s)	1	2.		
	Name(s) & Title(s) (Typed)	1	2.		
SURETY E	Name & Address		STATE OF INC.	LIABILITY LIMIT	Corporate Seal
	Signature(s)	1.	2.		
	Name(s) & Title(s) (Typed)	1	2		
SURETY F	Name & Address		STATE OF INC	LIABILITY LIMIT	Corporate Seal
	Signature(s)	1.	2.		
	Name(s) & Title(s) (Typed)	1	2.		
SURETY G	Name & Address		STATE OF INC.	LIABILITY LIMIT	Corporate Seal
	Signature(s)	1.	2.		
	Name(s) & Title(s) (Typed)	1	2.		

BOND PREMIUM ▶	RATE PER THOUSAND $ 5.	TOTAL $1,040.

INSTRUCTIONS

1. This form is authorized for use in connection with contracts for construction work or the furnishing of supplies or services. There shall be no deviation from this form without approval by PLN.

2. The full legal name and business address of the Principal shall be inserted in the space designated "Principal" on the face of this form. The bond shall be signed by an authorized person. Where such person is signing in a representative capacity (e.g., an attorney-in-fact), but is not a member of the firm, partnership, or joint venture, or an officer of the corporation involved, evidence of his authority must be furnished.

3. (a) Corporations executing the bond as sureties must be authorized to act as sureties. Where more than a single corporate surety is involved, their names and addresses (city and state) shall be inserted in the spaces (Surety A, Surety B, etc.) headed "CORPORATE SURETY (IES)", and in the space designated "SURETY (IES)" on the face of this form only the letter identification of the Sureties shall be inserted.

(b) Where individual sureties execute the bond, they shall be two or more responsible persons. A completed Affidavit of Individual Surety, for each individual surety, shall accompany the bond. Such sureties may be required to furnish additional substantiating information concerning their assets and financial capacility as PLN may require.

4. Corporations executing the bond shall affix their corporate seals. Individuals shall execute the bond opposite the word "Seal".

5. The name of each person signing this performance bond should be typed in the space provided.

Power of Attorney

FIDELITY AND DEPOSIT COMPANY OF MARYLAND

HOME OFFICE: BALTIMORE, MD.

KNOW ALL MEN BY THESE PRESENTS: That the FIDELITY AND DEPOSIT COMPANY OF MARYLAND, a corporation of the State of Maryland, by JOHN C. GARDNER, Vice-President, and C. M. PECOT, JR., Assistant Secretary, in pursuance of authority granted by Article VI, Section 2, of the By-Laws of said Company, which reads as follows:

"The President, or any one of the Executive Vice-Presidents, or any one of the additional Vice-Presidents specially authorized so to do by the Board of Directors or by the Executive Committee, shall have power, by and with the concurrence of the Secretary or any one of the Assistant Secretaries, to appoint Resident Vice-Presidents, Resident Assistant Secretaries and Attorneys-in-Fact as the business of the Company may require, or to authorize any person or persons to execute on behalf of the Company any bonds, undertakings, recognizances, stipulations, policies, contracts, agreements, deeds, and releases and assignments of judgments, decrees, mortgages and instruments in the nature of mortgages, and also all other instruments and documents which the business of the Company may require, and to affix the seal of the Company thereto."

does hereby nominate, constitute and appoint Richard W. Recob of Portland, Oregon.....

its true and lawful agent and Attorney-in-Fact, to make, execute, seal and deliver, for, and on its behalf as surety, and as its act and deed: any and all bonds and undertakings.....

And the execution of such bonds or undertakings in pursuance of these presents, shall be as binding upon said Company, as fully and amply, to all intents and purposes, as if they had been duly executed and acknowledged by the regularly elected officers of the Company at its office in Baltimore, Md., in their own proper persons. This power of attorney revokes that issued on behalf of Richard W. Recob, dated June 21, 1973.

The said Assistant Secretary does hereby certify that the aforegoing is a true copy of Article VI, Section 2, of the By-Laws of said Company, and is now in force.

IN WITNESS WHEREOF, the said Vice-President and Assistant Secretary have hereunto subscribed their names and affixed the Corporate Seal of the said FIDELITY AND DEPOSIT COMPANY OF MARYLAND, this 25th day of June, A.D. 1973

ATTEST: **FIDELITY AND DEPOSIT COMPANY OF MARYLAND**

(SIGNED)

C. M. PECOT, JR. By JOHN C. GARDNER

(SEAL) *Assistant Secretary* *Vice-President*

STATE OF MARYLAND
CITY OF BALTIMORE } ss:

On this 25th day of June, A.D. 1973, before the subscriber, a Notary Public of the State of Maryland, in and for the City of Baltimore, duly commissioned and qualified, came the above-named Vice-President and Assistant Secretary of the FIDELITY AND DEPOSIT COMPANY OF MARYLAND, to me personally known to be the individuals and officers described in and who executed the preceding instrument, and they each acknowledged the execution of the same, and being by me duly sworn, severally and each for himself deposeth and saith, that they are the said officers of the Company aforesaid, and that the seal affixed to the preceding instrument is the Corporate Seal of said Company, and that the said Corporate Seal and their signatures as such officers were duly affixed and subscribed to the said instrument by the authority and direction of the said Corporation.

IN TESTIMONY WHEREOF, I have hereunto set my hand and affixed my Official Seal, at the City of Baltimore, the day and year first above written.

(SIGNED) GLORIA J. COLEMAN

(SEAL) Notary Public Commission Expires July 1, 1974

CERTIFICATE

I, the undersigned, Assistant Secretary of the FIDELITY AND DEPOSIT COMPANY OF MARYLAND, do hereby certify that the original Power of Attorney of which the foregoing is a full, true and correct copy, is in full force and effect on the date of this certificate; and I do further certify that the Vice-President who executed the said Power of Attorney was one of the additional Vice-Presidents specially authorized by the Board of Directors to appoint any Attorney-in-Fact as provided in Article VI, Section 2 of the By-Laws of the FIDELITY AND DEPOSIT COMPANY OF MARYLAND.

This Certificate may be signed by facsimile under and by authority of the following resolution of the Board of Directors of the FIDELITY AND DEPOSIT COMPANY OF MARYLAND at a meeting duly called and held on the 16th day of July, 1969.

RESOLVED: "That the facsimile or mechanically reproduced signature of any Assistant Secretary of the Company, whether made heretofore or hereafter, wherever appearing upon a certified copy of any power of attorney issued by the Company, shall be valid and binding upon the Company with the same force and effect as though manually affixed."

IN TESTIMONY WHEREOF, I have hereunto subscribed my name and affixed the corporate seal of the said Company, this 24th day of June, 1974

C. M. Pecot

Assistant Secretary

L1419—Ctf.

BINGHAM - WILLAMETTE COMPANY

RESOLUTION OF AUTHORIZATION

Whereas, BINGHAM - WILLAMETTE COMPANY is a division of Guy F. Atkinson Company, a Nevada corporation, carrying on a general iron and steel fabrication and manufacturing business, including but not limited to machine and plate shop work, the manufacture of pumps, pressure vessels, gates and valves, and generally the design, manufacture and sale of other machinery equipment and devices which may be suitable for manufacture in its facilities:

Now, Therefore, be it

RESOLVED that each of the persons hereinafter named is hereby authorized on behalf of said corporation to do those things which are set forth following their name:

1. G. W. Wintz, Senior Vice President of Guy F. Atkinson Company and President of BINGHAM - WILLAMETTE COMPANY, is authorized to carry on all operations of said COMPANY, to represent it in all conferences, including any conferences with the United States or other governments or their agencies or representatives, to sign proposals, bids, contracts, purchase orders, change orders, bonds, applications for bonds, checks, progress estimates, government vouchers, affidavits, bills of sale, assignments, releases, warranties, letters, protests and appeals and, generally, to take any and all action necessary or convenient to the business of said COMPANY.

2. Wm. E. Tharp, Executive Vice President and General Manager of BINGHAM - WILLAMETTE COMPANY, is hereby authorized, in the absence of the said President, to carry on such business and execute such documents as the President could do if present, and the execution of any documents by the Executive Vice President and General Manager shall be conclusive evidence of the absence of the President.

3. A. R. Sadewic, Manager of Manufacturing of BINGHAM - WILLAMETTE COMPANY, is authorized to sign on behalf of said COMPANY, checks, progress estimates, government vouchers, affidavits, letters, bills of sale, assignments, protests, appeals and, in the absence of the President and Executive Vice President and General Manager, to sign all such proposals, bids, bonds, applications for bonds, contracts, purchase orders, change orders, releases, warranties or other documents and papers that could be signed by said President, and the execution of any documents by the Manager of Manufacturing shall be conclusive evidence of the absence of the President and Executive Vice President and General Manager.

4. W. L. Hallmark, Manager of Industrial Sales and Engineering of BINGHAM - WILLAMETTE COMPANY, is authorized to sign on behalf of said COMPANY, checks, progress estimates, government vouchers, affidavits, letters, bills of sale, assignments, protests, appeals and, in the absence of the President, and Executive Vice President and General Manager, to sign all such proposals, bids, bonds, applications for bonds, contracts, purchase orders, change orders, releases, warranties or other documents and papers that could be signed by said President, and the execution of any documents by the Manager of Industrial Sales and Engineering shall be conclusive evidence of the absence of the President and Executive Vice President and General Manager.

5. F. E. Westermann, Manager of the Valve Department of BINGHAM-WILLAMETTE COMPANY, is authorized to sign on behalf of said COMPANY, checks, progress estimates, government vouchers, affidavits, letters, bills of sale, assignments, protests, appeals and, in the absence of the President and Executive Vice President and General Manager, to sign all such proposals, bids, bonds, applications for bonds, contracts, purchase orders, change orders, releases, warranties or other documents and papers that could be signed by said President, and the execution by any documents by the Manager of the Valve Department shall be conclusive evidence of the absence of the President and Executive Vice President and General Manager.

RESOLVED FURTHER that all such actions heretofore taken in any of said capacities by any of the foregoing authorized representatives on behalf of this corporation are hereby ratified, confirmed and approved.

I, Betty A. Allen, Assistant Secretary of Guy F. Atkinson Company, the corporation above named, do hereby certify that pursuant to the by-laws of said corporation granting to the Executive Committee of its Board of Directors full powers to so act upon all such matters when the Board of Directors is not in session, said Executive Committee unanimously adopted the foregoing resolutions by written consent January 2, 1974, and that said resolutions are in full force and effect.

In Witness Whereof, I have hereunto set my hand and affixed the seal of said corporation this 24th day of June, 1974.

Betty A. Allen
Assistant Secretary

GENERAL CONDITIONS

* Basis of Contract Award

GC.1 CONTRACT DOCUMENTS. It is understood and agreed that the Invitation for Bids, Instructions to Bidders, Proposal, Proposal Data, Contract Agreement, Performance Bond, ~~Payment Bond~~, General Conditions, Specifications, Drawings, Addenda, and Change Orders issued by the Owner or the Engineer, and specifications and engineering data furnished by the Contractor and accepted by the Owner, are each included in this Contract and the work shall be done in accordance therewith.

**

GC.2 DEFINITIONS. Words, phrases, or other expressions used in these contract documents shall have meanings as follows:

1. "Contract" or "contract documents" shall include the items enumerated above under CONTRACT DOCUMENTS.

2. "Owner" or "PLN" shall mean the Perusahaan Umum Listrik Negara, an Agency of the Ministry of Public Works and Power of the Government of the Republic of Indonesia named and designated in the Contract Agreement as "Party of the First Part", acting through its duly authorized agents. All notices, letters, and other communication directed to the Owner shall be addressed and delivered to:

   Director of Construction
   Perusahaan Umum Listrik Negara
   Jalan Sunan Ngampel 1
   Kebajoran Baru
   Jakarta, Indonesia
   Cable address: PLNPST Jakarta Indonesia

3. "Contractor", "Manufacturer", or "Supplier" shall mean the corporation, company, partnership, firm, or individual named and designated in the Contract Agreement as the "Party of the Second Part", who has entered into this Contract for the performance of the work covered thereby, and its, his, or their duly authorized representatives.

4. "Subcontractor" shall mean and refer only to a corporation, partnership, or individual having a direct contract with the Contractor for performing work covered by these contract documents.

5. "Engineer" shall mean the firm of Black & Veatch International, Consulting Engineers, 1500 Meadow Lake Parkway, (mailing address P.O. Box 8405), Kansas City, Missouri 64114, (or P.O. Box 3149 Jakarta, Indonesia) or its duly authorized agents.

*Added for Contract
**Not included in Contract

6. "USA" shall mean the United States of America.

7. "AID" shall mean the United States Government, Department of State, Agency for International Development or any successor agency of the United States Government.

8. "Date of contract", or equivalent words, shall mean the date written in the first paragraph of the Contract Agreement; that is, the date of final signature by PLN.

9. "Contract effective date" shall mean the date when an irrevocable letter of credit is established in a United States of America bank.

10. "Day" or "days", unless herein otherwise expressly defined, shall mean a calendar day or days of 24 hours each.

11. "The work" shall mean the equipment, supplies, materials, labor, and services to be furnished under the contract and the carrying out of all obligations imposed by the contract documents.

12. "Drawings" or "plans" shall mean all (a) drawings furnished by the Owner as a basis for proposals, (b) supplementary drawings furnished by the Owner to clarify and to define in greater detail the intent of the contract drawings and specifications, (c) drawings submitted by the successful bidder with his proposal, provided such drawings are acceptable to the Owner, (d) drawings furnished by the Owner to the Contractor during the progress of the work, and (e) engineering data and drawings submitted by the Contractor during the progress of the work, provided such drawings are acceptable to the Engineer.

13. Whenever in these contract documents the words "as ordered", "as directed", "as required", "as permitted", "as allowed", or words or phrases of like import are used, it shall be understood that the order, direction, requirement, permission, or allowance of the Owner or Engineer is intended only to the extent of judging compliance with the terms of the contract; none of these terms shall imply the Owner or the Engineer has any authority or responsibility for supervision of the Contractor's forces, such supervision and the sole responsibility therefor being strictly reserved for the Contractor.

14. Similarly the words "approved", "reasonable", "suitable", "acceptable", "proper", "satisfactory", or words of like effect and import, unless otherwise particularly specified herein, shall mean approved, reasonable, suitable, acceptable, proper, or satisfactory in the judgment of the Owner or Engineer, to the extent provided in "12" above.

15. "Startup" shall mean the time period required to bring the steam-electric generating unit from an inactive condition, when construction is essentially complete, to the state ready for commercial operation. The startup period shall include preliminary inspection and check-out of equipment and supporting subsystems; trial operation of supporting equipment and subsystems; initial operation of the complete steam-electric generating unit; operation of the complete unit to obtain data, perform calibration and corrective work; shutdown, inspection and adjustment prior to obtaining commercial operating status.

16. "Initial operation" shall mean the first integral operation of the complete steam-electric generating unit with subsystems and supporting equipment in service or available for service.

17. "Commercial operation" shall mean the condition of operation in which the complete steam-electric generating unit is officially declared by the Owner to be available for continuous operation at variable loads up to and including rated capacity.

18. "Official acceptance" shall mean the Owner's written acceptance of all work performed under this Contract.

GC.3 EXECUTION OF CONTRACT. After appropriate AID approval, copies of the contract documents will be prepared by the Engineer. All copies will be submitted to the Contractor and the Contractor shall execute the Contract Agreement, insert executed copies of the required bonds and power of attorney, and submit all copies to the Owner. The date of contract on the contract forms shall be left blank for filling in by the Owner. The certification date on the power of attorney shall also be left blank for filling in by the Owner.

Copies of engineering data, special forms, or other documents furnished by the Contractor, which are required to be incorporated in the contract shall be supplied to the Engineer.

The Owner will execute all copies, and make distribution of one copy each to the Owner, Engineer, Contractor, and Surety.

After receipt of the executed contract documents, the Engineer will prepare 17 additional copies of the documents for distribution to the Owner, Engineer, Contractor and AID.

GC.4 LEGAL ADDRESSES. The business address of the Contractor given in the Proposal is hereby designated as the place to which all notices, letters, and other communictions to the Contractor may be mailed or delivered. The address of the Owner appearing in Article GC.2 is hereby designated as the place to which all notices, letters, and other communications to the Owner may be mailed or delivered. The delivery by one party to the other party at an address so designated, or the depositing in any mail box regularly maintained by the post office, of any notice, letter, or other communication addressed to such address, postage prepaid, registered or certified mail, with return receipt requested, shall be deemed sufficient service thereof, and the date of said service shall be the date of such delivery or mailing. Either party may change the said address or addresses at any time by an instrument in writing delivered to the Engineer and to the other party. Nothing herein contained shall be deemed to preclude or render inoperative the service of any notice, letter, or communication upon either party personally.

GC.5 SCOPE AND INTENT OF CONTRACT DOCUMENTS. The specifications and drawings are intended to supplement but not necessarily duplicate each other. Any work exhibited in the one and not in the other shall be executed as if it had been set forth in both, so that the work will be constructed according to the complete design as determined by the Engineer.

Should anything necessary for a clear understanding of the work be omitted from the specifications and drawings, or should the requirements appear to be in conflict, the Contractor shall secure written instructions from the Engineer before proceeding with the work affected thereby. It is understood and agreed that the work shall be performed according to the contract documents.

GC.6 INDEPENDENT CONTRACTOR. The relationship of the Contractor to the Owner shall be that of an independent contractor.

GC.7 ASSIGNMENT AND SUBCONTRACTING. The Contractor shall not assign or subcontract the work, or any part thereof, without the previous written consent of the Owner, Engineer, and AID, nor shall he assign, by power of attorney or otherwise, any of the money payable under this Contract unless written consent of the Owner has been obtained. No right under this Contract, nor claim for any money due or to become due hereunder shall be asserted against the Owner, or persons acting for the Owner, by reason of any so-called assignment of this Contract or any part thereof, unless such assignment has been authorized by the written consent of the Owner and AID. In case the Contractor is permitted to assign moneys due or to become due under this Contract, the instrument of assignment shall contain a clause subordinating the claim of the assignee to all prior liens for services rendered or materials supplied for the performance of the work.

Should any subcontractor fail to perform in a satisfactory manner the work undertaken by him, his subcontract shall be immediately terminated by the Contractor upon notice from the Owner. The Contractor shall be as fully responsible and accountable to the Owner for the acts and omissions of his subcontractors, and of persons either directly or indirectly employed by them, as he is for the acts and omissions of persons directly employed by him. Nothing contained in this Contract shall create any contractual relation between any subcontractor and the Owner.

GC.8 ORAL AND WRITTEN STATEMENTS. It is understood and agreed that the written terms and provisions of this Contract shall supersede all oral and written statements made by either party to this Contract prior to entering into contract. Written statements made by either party prior to entering into contract and oral statements shall not be effective or be construed as being a part of this Contract.

GC.9 REFERENCE STANDARDS. Reference to the standards of any technical society, organization, or association, or to codes of local or state authorities, shall mean the latest standard, code, specification, or tentative standard adopted and published at the date of taking bids, unless specifically stated otherwise.

GC.10 NO WAIVER OF RIGHTS. Neither the inspection by the Owner or Engineer or any of their officials, employees, or agents, nor any order by the Owner or Engineer for payment of money, or any payment for, or acceptance of, the whole or any part of the work by the Owner or Engineer, nor any extension of time, nor any possession taken by the Owner or its employees shall operate as a waiver of any provision of this Contract, or of any power herein reserved to the Owner, or any right to damages herein provided, nor shall any waiver of any breach in this Contract be held to be a waiver of any other or subsequent breach.

GC.11 AUTHORITY OF THE ENGINEER. To prevent delays and disputes, and to discourage litigation, it is agreed by the parties to this Contract that the Engineer shall determine all questions in relation to the work.

Duties of the Engineer with respect to the work performed under this Contract include, but are not necessarily limited to, the following: interpretation of the specifications and documents; review of engineering data submitted by the Contractor; witnessing tests of equipment and material prior to shipment as required; certification of the delivery of equipment and materials to the plant site; inspection and acceptance or rejection of equipment and materials delivered to the plant site; inspection and acceptance or rejection of equipment and materials during and upon completion of construction at the plant site; assisting the Owner in preparation and issuance of change orders; review of acceptance test procedures, schedules, and results; and final inspection of the completely installed equipment and materials.

If in the opinion of the Contractor a decision made by the Engineer is not in accordance with the meaning and intent of the contract, the Contractor may file with the Engineer, within 30 days after receipt of the decision, a written objection to the decision. Failure to file an objection within the allotted time will be considered acceptance of the Engineer's decision and the decision shall become final and conclusive.

The Engineer's decision and the filing of the written objection thereto shall be a condition precedent to the right to request arbitration or to start action in court.

GC.12 ENGINEERING INSPECTION. The Owner may appoint such inspectors as the Owner deems proper to inspect the materials furnished and the work performed for compliance with the drawings and specifications. The Contractor shall furnish all reasonable assistance required by the Engineer, or inspectors, for the proper inspection of the work.

The Contractor shall obey the directions and instructions of the Engineer or inspector when they are consistent with the obligations of this Contract. Should the Contractor object to any order given by any inspector, the Contractor may make written appeal to the Engineer for a decision.

Inspectors and other authorized representatives of the Owner or Engineer shall be free at all times to perform their duties. Any attempted interference of one of them by the Contractor or his employees shall be sufficient reason, if the Owner so decides, to terminate the contract.

Inspection of the work by the Engineer, or inspectors, will be performed at the factory of the manufacturer prior to shipment of the equipment and materials and at the Owner's plant site following delivery thereto. Procedures whereby the Contractor shall notify the Engineer a reasonable time in advance that the work or any part thereof is ready for inspection shall be established by agreement between the Engineer and the Contractor.

Inspection shall not relieve the Contractor from any obligation to perform the work strictly in accordance with the drawings and specifications. Work not so performed shall be removed and replaced by the Contractor at his own expense.

GC.13 RIGHT OF OWNER TO TERMINATE CONTRACT FOR CAUSE. If the work to be done under this Contract is abandoned by the Contractor; or if this Contract is assigned by him without the written consent of the Owner; or if the Contractor is adjudged bankrupt; or if a general assignment of his assets is made for the benefit of his creditors; or if a receiver is appointed for the Contractor or any of his property; or if at any time the work under this Contract is being unnecessarily delayed, that the Contractor is violating any of the conditions of this Contract, or that he is executing the same in bad faith

or otherwise not in accordance with the terms of said contract; or if the work is not substantially completed within the time named for its completion or within the time to which such completion date may be extended; then the Owner may serve written notice upon the Contractor and his surety of the Owner's intention to terminate this Contract. Unless within 30 days after the serving of such notice, a satisfactory arrangement is made for continuance, this Contract shall terminate. In the event of such termination, the surety shall have the right to take over and complete the work, provided that if the surety does not commence performance within 60 days, the Owner may take over and prosecute the work to completion, by contract or otherwise. The Contractor and his surety shall be liable to the Owner for all excess cost sustained by the Owner by reason of such prosecution and completion.

GC.14 HINDRANCES AND DELAYS. The Contractor expressly agrees that the period of time named in the Contract Agreement to complete all work includes allowance for all hindrances and delays incident to the work. No claim shall be made by the Contractor for hindrances or delays from any cause during the progress of the work, except as provided under SUSPENSION OF WORK and FORCE MAJEURE.

GC.15 SUSPENSION OF WORK. The Owner reserves the right to suspend and reinstate execution of the whole or any part of the work without invalidating the provisions of the contract. Orders for suspension or reinstatement of work will be issued by the Owner to the Contractor in writing. The time for completion of the work will be extended for a period equal to the time lost by reason of the suspension.

Changes in Contractor's price or delivery schedules which occur during a period of suspension ordered by the Owner shall not affect this Contract except as agreed by the Owner and the Contractor. If the Contractor proposes to apply such changes to this Contract, he shall present his proposal to the Owner in writing. During the 60 day period from and after the receipt by the Owner of such written proposal, the Owner shall be permitted to reinstate the work without change. If the work is not reinstated during this 60 day period, the Owner and the Contractor shall agree upon reasonable and proper changes or the Owner may cancel the unshipped portion of the work.

Changes in delivery schedule shall mean extension of the scheduled time of delivery beyond the number of days of the suspension period.

Any necessary and demonstrable costs incurred by the Contractor as a result of suspension of work will be paid by the Owner, provided such costs are substantiated to the satisfaction of the Owner.

GC.16 FORCE MAJEURE. The term force majeure, as used in these contract documents shall mean any cause beyond the control of the Contractor, and which the Contractor could not foresee and/or reasonably provide against and which prevents the Contractor from wholly or partly performing any duties under the contract.

Force majeure shall include, but is not limited to, any of the following:

a. War, revolution, insurrection or hostilities (whether declared or not)

b. Riot, civil commotion or civil uprising (other than among the Contractor's employees)

c. Earthquake, flood, tempest, hurricane, lightning or other natural disaster

d. Any fire of major proportions, or explosion

e. Epidemic

f. Strike, lockout or other industrial disturbance

If there occurs an event constituting force majeure, the Contractor shall give written notice of the occurrence to the Owner within 15 days of the occurrence or as soon thereafter as is practicable, including a statement describing the effect of such occurrence upon the performance of this agreement.

In the event of a force majeure, the Contractor unless otherwise directed by the Owner in writing shall continue to undertake and perform the duties included in this Contract as far as is reasonably practicable. If prevented from so performing by such cause, the performance may be suspended during the continuance of such inability but for no longer period and such inability shall be removed if practicable with all reasonable dispatch.

In the event of a force majeure resulting in a suspension of work this Contract shall be extended by a period equal to that for which the Contractor was prevented from performing.

If such event lasts for more than 45 days after notice has been given to the Owner in writing, either party to this Contract may terminate this Contract and the Contractor shall thereupon be entitled to any sums which would be payable pursuant to the termination provision of this Contract.

GC.17 DELAYED SHIPMENT. The Owner reserves the right to order (by written notice) the Contractor to delay shipment of equipment and materials herein contracted. In the event such a delay is ordered by the Owner the Owner will pay the Contractor reasonable and proper extra charges incurred by the Contractor as a result of the delay. Such extra charges shall include storage charges, handling charges, insurance, transportation charges to the storage facility, and preservation during storage. In the event storage is necessary, the Contractor shall be guided by the Owner's instructions in respect to the removal from storage and the arrangements for export shipment in accordance with the terms of the Contract.

GC.18 TERMINATION FOR THE CONVENIENCE OF THE OWNER. The Owner reserves the right to terminate and cancel this Contract in whole or in part at any time by written notice to the Contractor. In the event of such termination, the Contractor agrees to waive any claims for damages including loss of anticipated profits on account thereof. The Owner will pay to the Contractor reasonable and proper cancellation charges which are demonstrable to the satisfaction of the Owner. In the event of such termination, provisions of these contract documents relating to specific warranties and guarantees and to agreements to hold harmless or indemnify the other party to the Contract shall remain in full force and effect to the extent provided therein.

Upon receipt of notice of termination, the Contractor shall discontinue the work on the date and to the extent specified in the notice, make every reasonable effort to procure cancellation of all orders and subcontracts to the extent of their relationship to the work terminated and upon terms satisfactory to the Owner; halt all further purchasing or subcontracting activity applicable to the work terminated; and assist the Owner in maintenance, protection, and disposition of work already acquired by the Owner under this Contract.

GC.19 MODIFICATIONS. The Contractor shall modify the work whenever so ordered by the Owner and such modifications shall not affect the validity of the contract. Modifications may involve increases or decreases in the amount of the work for which appropriate contract price adjustment will be made.

All modifications shall be made under the authority of duly executed change orders issued and signed by the Owner, approved by AID, and accepted and signed by the Contractor.

If modifications affect the delivery and completion schedule of the work, appropriate adjustments to the schedules will be made as provided for in the article FORCE MAJEURE and this article in these GENERAL CONDITIONS.

GC.19.1 Extra Work. Modifications which increase the amount of the work shall be paid for according to the amount actually done.

Claims for extra work will not be paid unless the work covered by such claims was authorized in writing by the Owner and Engineer. The Contractor shall not have the right to prosecute or maintain an arbitration proceeding or to recover for extra work unless the claim is based upon a written order from the Owner and Engineer. Payments for extra work will be based on lump sums plus a percentage allowance as agreed to by the Owner and Engineer and the Contractor before the extra work is started. The percentage allowance shall include the Contractor's extra profit and extra overhead and, unless otherwise agreed by the Contractor and the Owner and Engineer, the percentage allowance shall be 15 per cent of the total direct cost.

For the purpose of determining whether proposed extra work will be authorized, the Contractor shall submit to the Engineer, for approval, a detailed fixed cost proposal for proposed extra work. The proposal shall show itemized quantities and charges for all elements of direct cost and a percentage allowance to cover extra profit and extra overhead. Unless otherwise agreed upon by the Contractor and the Owner and Engineer, the percentage allowance shall be 15 per cent of the total direct cost.

GC.19.2 Decreased Work. If a modification decreases the amount of work to be done, such decrease shall not constitute the basis for a claim for damages or anticipated profits on work affected by such decrease. The Engineer shall determine on an equitable basis the amount of (a) credit due the Owner for contract work not done as a result of an authorized change, (b) allowance to the Contractor for any actual loss incurred in connection with the purchase, delivery, and subsequent disposal of materials or equipment required for use on the work as planned and which could not be used in any part of the work as actually built, and (c) any other adjustment of the contract amount where the method to be used in making such adjustment is not clearly defined in the contract documents.

GC.20 ARBITRATION. Except as may otherwise be provided in this Contract, any dispute or difference arising under this Contract which cannot be settled by agreement between the parties to the dispute shall be submitted to arbitration in the manner specified herein.

Within 30 days from the date of failure to reach agreement as established by written notice by either party to the dispute to the other, each party to the dispute shall appoint an arbitrator. If the two arbitrators thus appointed fail to agree upon a decision and award within 30 days of the date of appointment of the second arbitrator, they shall select a third arbitrator

by agreement. If either party to the dispute fails to appoint an arbitrator within the allotted time, or if the two arbitrators cannot agree upon a third arbitrator within 10 days, then the parties to the dispute, or either of them, shall apply to the Court of Arbitration of the International Chamber of Commerce, 38 Cour Albert Ier, Paris VIII for the appointments which have not been made as stated.

The arbitration proceedings shall be conducted in accordance with the Rules of Conciliation and Arbitration of the International Chamber of Commerce. The decision shall be by majority vote of the arbitrators and shall be final, conclusive, and binding upon the parties thereto. Each party shall bear the cost of its appointed arbitrator. The cost of the third arbitrator if one be appointed, shall be borne by the parties as the arbitrators may determine.

All arbitration proceedings shall be conducted in a location acceptable to both parties to the dispute.

Decision of the arbitrators shall be final and binding on the parties and an action to enforce the decision of the arbitrators may be instituted in any court of competent jurisdiction.

The Contractor shall not cause a delay of the work during any arbitration proceedings, except by agreement with the Owner. It is understood and agreed by the parties to the contract that no requirement or statement herein shall be interpreted as curtailing the power of the Engineer to determine the amount, quality, and acceptability of work and materials.

GC.21 LAWS AND REGULATIONS.

GC.21.1 Non-Indonesian Laws and Regulations. The Contractor shall observe and comply with all applicable ordinances, laws, and regulations in the locality where equipment may be manufactured. The Contractor shall protect and indemnify the Owner and the Owner's officers and agents against any claim or liability arising from or based on violation of such ordinances, regulations, or laws.

GC.21.2 Indonesian Laws and Regulations. If Contractor's personnel are required in Indonesia, the following stipulations shall apply.

The Contractor shall observe, comply with and respect Indonesian laws, rules and regulations and shall not interfere with Indonesian political or religious affairs either directly or indirectly. The Contractor shall comply with such other rules and regulations as the Owner and Engineer may establish from time to time with respect to the construction work and personnel employed by the Contractor.

The Contractor shall, in all dealings with labor in his employ, have due regard to all recognized festival days of rest and religious or other customs.

The Contractor shall not give or barter, or otherwise dispose of, to any person or persons, any arms or ammunition of any kind, or permit or suffer the same as aforesaid.

In the event of any outbreak of illness of an epidemic nature, the Contractor shall comply with and carry out such regulations, orders and requirements as may be made by the Government of Indonesia or the local medical or sanitary authorities, for the purpose of dealing with and overcoming the same.

GC.22 TAXES, PERMITS AND LICENSES.

GC.22.1 Non-Indonesian Taxes, Permits, and Licenses. The Contractor shall pay all sales, use, income and other taxes and duties, tariffs, and imports lawfully assessed against the Owner or the Contractor (excluding the Republic of Indonesia or any political subdivision thereof) in connection with the work included in this Contract. The Contractor shall obtain and pay for all USA or other non-Indonesian licenses, permits, and inspections required for the work including the cost of securing all export licenses and permits for materials, equipment, supplies and personnel exported from the USA or other country to Indonesia.

GC.22.2 Indonesian Taxes, Permits, and Licenses. The Contractor will be exempt from any import duties and charges levied by Indonesian law on the equipment and materials by virtue of the Owner's relevant exemption privileges. The exemption shall also include stamp duties imposed on the Contract. Any Indonesian taxes which the Contractor pays in order to perform the work under this Contract will be for the account of the Owner; however the Contractor shall not pay such taxes without the prior written approval of the Owner.

The Contractor and his non-Indonesian field personnel will be exempt from the payment of Indonesian income taxes on payments received under this Contract and from custom duties, harbor dues and other charges for importation of personal effects.

Instruments, tools, machinery, and vehicles required for the performance of the work in Indonesia and imported on the condition that they will be exported at the completion of the work will be exempted from customs duties and other such charges.

GC.23 PATENTS. Royalties and fees for patents covering materials, articles, apparatus, devices, equipment, or processes used in the work, shall be included in the contract amount. The Contractor shall satisfy all demands that may be made at any time for such royalties or fees and he shall be liable for any damages or claims for patent infringements. The Contractor shall, at his own cost and expense, defend all suits or proceedings that may be instituted against the Owner for alleged infringement of any patents involved in the work and, in case of an award of damages, the Contractor shall pay such award. Final payment to the Contractor by the Owner will not be made while any such suit or claim remains unsettled.

In the event any apparatus or equipment, or any part thereof furnished by the Contractor, is in such suit or proceedings held to constitute infringement, and its use is enjoined, the Contractor shall, at his option, and at his own expense, either: procure for the Owner the right to continue use of said apparatus, equipment, or part thereof; replace it with noninfringing apparatus or equipment; or modify it so it becomes non-infringing.

GC.24 MATERIALS AND EQUIPMENT. Unless specifically provided otherwise in each case, all materials and equipment furnished for permanent installation in the work shall conform to applicable standard specifications and shall be new, unused, and undamaged when installed or otherwise incorporated in the work. No such material or equipment shall be used by the Contractor for any purpose other than that intended or specified, unless such use is specifically authorized by the Owner in each case.

GC.24.1 Equivalent Materials and Equipment. Whenever a material or article is specified or described by using the name of a proprietary product or the name of a particular manufacturer or vendor, the specific item mentioned shall be understood as establishing the type, function, and quality desired. Other manufacturers' products will be considered provided sufficient information is submitted to allow the Engineer to determine that the products proposed are equivalent to those named.

GC.25 GUARANTEE. The Contractor guarantees that the work herein contracted will be as specified and will be free from defects in design, workmanship, and materials. If within the guarantee period the work fails to meet the provisions of this guarantee, the Contractor shall promptly correct any defects, including nonconformance with the specifications, by adjustment, repair, or replacement of all defective parts or materials. Labor costs involved in carrying out such work shall be borne by the Contractor.

The guarantee period shall begin on the date of official acceptance, and shall end 12 months later.

If manufacturer's field representatives are included in the Contract, such supervision shall be furnished by the Contractor without cost for the correction of any defects.

The cost of all materials, parts, labor, transportation, supervision, special tools, and supplies required for replacement or repair of parts and for correction of defects shall be paid by the Contractor or by the surety.

This guarantee shall be extended to cover all repairs and replacements furnished under the guarantee and the period of the guarantee for each such repair or replacement shall be one year from the date of installation thereof.

If within 20 days after the Owner gives the Contractor notice of a defect, the Contractor neglects to make or undertake with due diligence to make the necessary corrections, the Owner is hereby authorized to make the corrections himself or order the work to be done by a third party, and the cost of the corrections shall be paid by the Contractor. The Owner will be permitted to make repairs or replacements on equipment without affecting the guarantee or without prior notice to the Contractor so long as the repairs or replacements involve the correct installation of replacement parts. The Owner shall also be permitted to adjust or test equipment as outlined in instruction manuals provided by the Contractor or as directed by the Contractor's erection or operating superintendent.

In the event of an emergency where, in the judgment of the Owner, delay would cause serious loss or damage, repairs or adjustments may be made by the Owner or a third party chosen by the Owner without advance notice to the Contractor and the cost of the work shall be paid by the Contractor, or by the surety. In the event such action is taken by the Owner, the Contractor will be notified promptly and shall assist wherever possible in making the necessary corrections.

GC.26 INSURANCE. The Contractor shall secure and maintain insurance of such types and in such amounts as may be necessary to protect himself and the interests of the Owner against all hazards or risks of loss as hereinafter specified. The form and limits of such insurance, together with the underwriter thereof in each case, shall be acceptable to the Owner but regardless of such acceptance it shall be the responsibility of the Contractor to maintain adequate insurance coverage at all times. Failure of the Contractor to maintain adequate coverage shall not relieve him of any contractual responsibility or obligation.

In the event of loss or damage to equipment and materials furnished under this Contract, the Contractor shall file all damage claims and shall be responsible for the replacement or repair of the work insured hereunder. Passage of title shall not relieve the Contractor of responsibility for loss or damage to the work.

The Contractor shall file with the Owner satisfactory certificates, or copies, of the policies providing the specified insurance. Certificates of insurance covering physical loss or damage to equipment and materials shall be submitted at least 60 days before the first shipment of the equipment and materials. A certificate for each of the other insurance policies shall be submitted at least 60 days prior to the arrival of the Contractor's personnel in Indonesia. Each certificate shall state that the Owner will be given 60 days written notice before the change, cancellation, or expiration of the included policies.

The workmen's compensation, automobile liability, and general liability insurance specified shall apply only to field services such as manufacturer's technical direction, field testing, and similar work not included as part of the normal manufacturing process.

GC.26.1 Workmen's Compensation and Employer's Liability. This insurance shall protect the Contractor against all claims under applicable workmen's compensation laws. The Contractor shall also be protected against claims for injury, disease, or death of employees which, for any reason, may not fall within the provisions of a workmen's compensation law. The policy covering workmen within the USA shall include an "all states" endorsement.

The liability limits shall not be less than the following:

Workmen's Compensation	
Employees within the USA	Statutory
Personnel outside the USA who are US citizens, residents of the USA, or hired in the USA	Payments comparable to those provided by the Longshoremen's and Harbor Worker's Act (33 USC 901 et seq)
Other employees	Payments meeting at least the minimum legal requirements applicable by reason of the point of hiring and the site of the work
Employer's Liability (for all employees)	$100,000 each person

GC.26.2 Comprehensive Automobile Liability. This insurance shall be written in comprehensive form and shall protect the Contractor against all claims for injuries to members of the public and damage to property of others arising from the use of motor vehicles, and shall cover operation on or off the site of all motor vehicles licensed for highway use, whether they are owned, nonowned, or hired.

The liability limits per vehicle shall not be less than:

Bodily injury	$50,000 each person $100,000 each occurrence
Property damage	$100,000 each occurrence

GC.26.3 Comprehensive General Liability. This insurance shall be written in comprehensive form and shall protect the Contractor against all claims arising from injuries to members of the public or damage to property of others arising out of any act or omission of the Contractor or his agents, employees, or subcontractors or from strikes, riots, and civil commotions. In addition, this policy shall specifically insure the contractual liability assumed by the Contractor under the article entitled DEFENSE OF SUITS. The Contractor shall notify the Owner of any contractual liability assumed hereunder that is not insurable.

The policy shall insure all of the hazards incident to the work including, but not limited to, the hazards enumerated below whenever such hazards are involved in the Contractor's work:

(1) Premises - Operations

(2) Elevators and hoists

(3) Independent contractors (Contractor's protective liability insurance for protection against suits arising out of negligence of subcontractors.)

(4) Products including completed operations to be in force for one year after official acceptance of the work.

(5) Contractual liability

To the extent that any contractor's work calls for blasting, explosive or underground work, his comprehensive general liability insurance shall be written to eliminate explosion, collapse, and underground damage (XCU) exclusions.

The liability limits shall not be less than:

Bodily injury	$250,000 each person $500,000 each occurrence
Property damage	$500,000 each occurrence $500,000 aggregate

GC.26.4 Installation Floater. This insurance shall protect the Contractor, the Owner, and the Engineer from all insurable risks of physical loss or damage to materials and equipment while the materials and equipment are in transit from the Contractor's factory to the USA port of shipment; during storage and loading for ocean shipment; during unloading and storage at the receiving port; during loading and transit from the receiving port to the construction site; and until the equipment and materials are unloaded at the plant site, inspected, and received into custody of the Owner or his designated installation contractor or until 60 days from unloading at the port of Semarang, whichever shall first occur. It shall be of the "all risks" type, with coverages designed for the circumstances which may occur in the particular work included in this Contract. The coverage shall be for an amount not less than the insurable value of the equipment and materials CI&F at the site.

Installation floater insurance shall provide for losses to be payable to the Contractor, the Owner, and the Engineer as their interests may appear and shall contain a waiver of subrogation rights against the insured parties.

Installation floater insurance shall be coordinated with the ocean cargo insurance specified hereinafter to provide complete coverage of equipment and materials at all times until termination of the coverage as specified above.

Certificates of insurance covering installation floater insurance shall quote the insuring agreement and all exclusions as they appear in the policy; or in lieu of certificates, copies of the complete policy may be submitted.

GC.26.5 Ocean Cargo Insurance. This insurance shall insure and protect the insurable interests of the Contractor and the Owner against all insurable risks of physical loss or damage to equipment and materials while aboard an ocean going vessel in transit to the Owner. This insurance shall be written for all risks including but not limited to war, riot, strike, and civil commotion. Coverage shall be for an amount not less than the cost, insurance, and freight (CI&F) value of the equipment and materials.

In the event the Contractor elects, or is directed by the Owner, to ship equipment and materials by aircraft, insurance providing coverage equivalent to that specified above for ocean cargo shall be provided.

GC.26.6 Other Insurance. The Contractor shall secure and maintain such other insurance coverage as may be required to protect against perils and legal liabilities not covered under the foregoing coverages.

GC.27 TRANSFER OF TITLE. The title of ownership for equipment and material furnished fob port of shipment under this Contract shall be passed to the Owner at the time the equipment and material are actually loaded free on board cargo vessels at the port of shipment. This transfer of title shall not be construed to mean an acceptance of the equipment and materials; the Contractor shall continue to be responsible for the quality and performance of such equipment and materials, and for their compliance with the specifications, until final acceptance of the work and the fulfillment of the guarantee provisions of this Contract.

Transfer of title shall not relieve the Contractor from responsibility for all risk of loss or damage to the equipment and materials as specified under the article INSURANCE in these GENERAL CONDITIONS.

GC.28 DEFENSE OF SUITS. In case any action in court is brought against the Owner or Engineer, or any officer or agent of either of them, for the failure, omission, or neglect of the Contractor to perform any of the covenants, acts, matters, or things by this Contract undertaken; or for injury or damage caused by the alleged negligence of the Contractor or his subcontractors or his or their agents, or in connection with any claim based on lawful demands of subcontractors, workmen, material men, or suppliers; the Contractor shall indemnify and save harmless the Owner and the Engineer and their officers and agents, from all losses, damages, costs, expenses, judgments, or decrees arising out of such action.

GC.29 RELEASE OF LIABILITY. Acceptance by the Contractor of the last payment shall be a release to the Owner and every officer and agent thereof, from all claims and liability hereunder for anything done or furnished for, or relating to the work, or for any act or neglect of the Owner or of any person relating to or affecting the work.

The last payment by the Owner to the Contractor shall constitute final acceptance of all work performed under this Contract and shall be a release to the Contractor and his surety from all contractual liabilities and responsibilities to the Owner except those liabilities and responsibilities assumed under the article entitled GUARANTEE in these GENERAL CONDITIONS.

GC.30 CLAIMS FOR LABOR AND MATERIALS. The Contractor shall indemnify and save harmless the Owner from all claims for labor and materials furnished under this Contract. When requested by the Owner, the Contractor shall submit satisfactory evidence that all persons, firms, or corporations who have done work or furnished materials under this Contract, for which the Owner may become legally liable, have been fully paid or satisfactorily secured. In case such evidence is not furnished or is not satisfactory, an amount will be retained from money due the Contractor which in addition to any other sums that may be retained will be sufficient, in the opinion of the Owner, to liquidate all such claims. Such sum will be retained until the claims as aforesaid are fully settled or satisfactorily secured.

GC.31 CONTRACTOR'S PRICE BREAKDOWN. The Contractor shall prepare and submit to the Engineer for approval a breakdown of the contract price according to the system of accounts provided by the Owner. The Contractor's price breakdown shall be submitted to and approved by the Engineer before any payments are made under this Contract. Each invoice submitted for payment shall be prepared in accordance with the price breakdown approved by the Engineer.

The sum of the items listed in the Contractor's price breakdown shall equal the contract lump sum price or prices. Overhead and profit shall not be listed as separate items.

An unbalanced breakdown estimate providing for overpayment of the Contractor on items of work which would be performed first will not be accepted.

GC.32 PAYMENTS. Payment for the work included in this Contract will be made in accordance with the requirements stated herein and the payment rules in Section 6.3 of AID Capital Projects Guidelines "Borrower Procurement of Equipment and Materials" M.O. 1442.3.

GC.32.1 Dollar Payments. The Owner will establish, in favor of the Contractor, an irrevocable Letter of Credit in a USA bank covering the total dollar price of the equipment and materials plus export shipping expenses plus the dollar portion of the services provided by the Contractor in Indonesia if such services are required by this Contract.

In accordance with AID regulations, the Contractor may designate the USA bank to issue the Letter of Credit in his favor, provided that this designation is made prior to approval of the Contract by AID and provided that the contract amount is $25,000 or more. If the Contractor designates a bank other than the bank which the Owner has selected to receive the AID Letter of Commitment, the Contractor shall pay the additional bank charges incurred.

GC.32.1.1 Dollar Payments for Equipment, Materials, Freight, and Insurance. All requests for dollar payment for equipment, materials, freight and insurance, excepting final payment, shall be submitted to the bank holding the Letter of Credit and shall include the following documentation:

a. Completed General Accounting Office Standard Form 1034, "Public Voucher for Purchase and Services Other Than Personal".

b. The Contractor's commercial invoice. Each invoice shall be marked "paid" by the Contractor except for equipment and materials of USA source and origin in which case the bank will certify by endorsement on or attached to the invoice that payment has been made.

c. AID Form 1440-3, Contractor's Certificate and Agreement with the Agency for International Development, Contractor's Invoice and Contract Abstract, executed in accordance with the instructions thereon. The insurer or carrier is not required to execute a copy of this form.

d. The following certification, signed and dated by the Contractor:

> The undersigned certifies that (1) the sales value of the equipment covered by this invoice; plus the value of equipment already delivered; plus the sales value of engineering services, labor, and purchased material for which expenditures have been made; plus the amount expended on account of commitments for equipment remaining to be supplied under the subject contract, are not less than the total payment already received or claimed against this Contract, including payments claimed under this invoice; and (2) it is complying with the terms and conditions of the subject contract.

e. Shipping documentation consisting of:

> Bill of lading or substitute commercially acceptable document such as copy of ocean or charter party bill of lading, arriving bill, or parcel post receipt. The bill of lading must indicate the carrier's statement of charges.
>
> If shipment is from free port or bonded warehouse in Indonesia, a copy of the bill of lading covering shipment from the source to the free port or bonded warehouse and a delivery receipt evidencing release from the free port or bonded warehouse shall be submitted. The date of the delivery receipt will be considered as the shipment date.
>
> If the equipment and materials are procured from sources within AID Geographic Code 941, excluding the USA, and shipment is made on a liner vessel bearing the flag of a country within AID Geographic Code 941, excluding the USA, the bill of lading submitted must contain a certification signed by the carrier that a copy of the carriers applicable freight rate tariff has been filed with the Resources Transportation Division, AID.

The number of copies required of the above documentation will be determined later. The AID Loan Number 497-H-024 shall appear on all documents.

* f.

*f. added for Contract, See page GC-20A

f. Progress payments submitted prior to fas delivery shall include certification, signed and dated by the Contractor, that the engineering/manufacturing progress to that date is in accordance with the Contractor's engineering/manufacturing schedule as previously submitted to and accepted by the Engineer. The certification document must be accompanied by a copy of a certificate from the Engineer to the Owner attesting that such progress has been made.

*Added for Contract

GC.32.1.2 Dollar Payments for Field Services. All requests for payment of the dollar portion of the Contractor's field services in Indonesia shall be submitted to the bank holding the Letter of Credit and shall include the following documentation:

a. Contractor's invoice describing the services performed, identifying the covering contract and the sections thereof which provide for such payment and the terms of payment. The invoice must be accompanied by written approval of the Engineer and Owner consenting to the payment of the invoice.

b. The following certification attached to, or endorsed on, the Contractor's invoice:

> "The undersigned certifies that the costs reimbursable to the Contractor and the amount payable to the Contractor in accordance with the terms of the contract, up to the date of this certificate, are not less than the total payments received or claimed by the Contractor under the contract (including the payment claimed under this invoice), and that the Contractor has fully complied with the terms and conditions of the contract, including the plans and specifications."

c. AID Form 1440-3, Contractor's Certificate and Agreement with the Agency for International Development, Contractor's Invoice and Contract Abstract, executed in accordance with the instructions thereon.

The number of copies required of the above documentation will be determined later. The AID Loan Number 497-H-024 shall appear on all documents.

GC.32.2 Rupiah Payments. If payments in rupiahs for a portion of the work is included in this Contract, requests for payments under the rupiah portion of this Contract shall include the following documentation:

* a. The Contractor's invoice. The invoice shall show the value of the rupiah portion of the work, including Administrative Expenses

b. The following certification, signed and dated by the Contractor:

> I (we) hereby certify that the equipment and materials invoiced herein or covered by the attached invoice were mined, grown, or produced in _____(eligible source country) and that any produced equipment and materials were manufactured, processed, or assembled into

*Revised per Contract

equipment and materials substantially different in basic characteristics or in purpose or utility from any imported components.

I (we) further certify that to the best of my (our) information and belief none of such equipment and materials contain components imported from other than free world (A.I.D. Geographic Code 935) countries.

The number of copies required of the above documentation will be determined later. The AID Loan Number 497-H-024 shall appear on all documents.

GC.32.3 Local Currency Needs. It is a requirement of AID that all local rupiah costs of the contract be paid in Indonesian Rupiahs. Dollar payments will not be made from the AID loan for that portion of the contract.

Whenever it is necessary for the Contractor, or personnel employed by him, to convert USA Dollars to Indonesian Rupiahs arrangements for such conversion shall be made through the US Disbursing Officer or the AID Jakarta Mission Controller as appropriate or as otherwise directed by the US Disbursing Officer.

* GC.32.4 Equipment and Materials Payment Schedule. Payment for the equipment and materials portion of this Contract will be made in accordance with the following schedule:

75% pro rata per shipment due fob ocean vessel. If shipment cannot be made due to force majeure conditions, payment will be made against Contractor's invoice and warehouse receipt.

15% Pro rata per shipment due upon Engineer's and Owner's certification of receipt of shipment at the Owner's plant site, but in no event later than six months after shipment from the factory or storage of the equipment

10% as provided hereinafter under Final Payment

100% of expenses incidental to export of the equipment including insurance, freight, and storage charges will be paid against Contractor's invoice and evidence of export or storage.

*Revised for Contract, See Page GC-22A

* GC.32.4 Equipment and Materials Payment Schedule. Payment for the equipment and materials portion of this Contract will be made in accordance with the following schedule:

a. Equipment and Materials. The payment percentages hereinafter stated apply to the equipment and materials Base Contract price stated in Article II of the Contract Agreement, Six Hundred Thirty Five Thousand Dollars ($635,000.00), and stipulated in the Basis of Contract Award:

Progress Payments

Sixty per cent (60%) due as progress payments made upon Contractor's invoice and certification of Engineering/Manufacturing progress as provided under GC.32.1.1 and in accordance with the following time schedule:

September 1974	15%
December 1974	15%
March 1975	15%
June 1975	15%

Shipment Payment
(Delivery fob port of shipment)

30% due fob ocean vessel for shipment of the equipment, materials and spare parts or storage as provided in Article GC.17, unless, as certified by the Engineer, the Contractor is unable to load aboard vessel within 30 days after delivery to the dock for cause specified as force majeure in Article GC.16. Upon certification by the Engineer of such delay, payment shall be due 30 days after fas delivery.

Final Payment

10% as provided hereinafter under Final Payment, Article GC.32.6.

b. Export Expenses and Spare Parts. 100% of documented expenses incidental to export of the equipment including ocean freight, surcharges, ocean cargo insurance, unloading charges and storage charges fob will be paid against Contractor's invoice and evidence of export, or storage as provided in Article GC.17.

* Revised for Contract

GC.32.5 Field Services Payment Schedule. The Contractor shall prepare and submit requests for payment for the dollar and rupiah portions of the Contract relating to the Contractor's field technical advisers, service and training personnel in Indonesia each month to the Engineer. Upon approval of the request for payment by the Engineer and the Owner, the Owner will pay the rupiah value of the work performed during the preceding month not later than 60 days after receipt of the approved invoice; the invoices for the dollar portion of the work will be returned to the Contractor with the Engineer's and Owner's approval for presentation by the Contractor to the bank holding the Letter of Credit.

Separate requests for payment shall be submitted for the dollar and rupiah portions of the erection work. Payment in dollars will be made against the Letter of Credit. Payment in rupiahs will be made in Indonesia by the Owner.

GC.32.6 Final Payment. Upon official approval and acceptance of the work by the Owner, the Contractor shall prepare and submit to the Engineer, final invoices.

The invoices shall include the 10 per cent retainage of the contract prices for equipment and materials adjusted according to the provisions of this Contract. Subject to the Engineer's approval and certification, such final invoices will be submitted to the Owner within 60 days of the Engineer's receipt thereof; and the Owner will within 60 days after said final invoices are certified forward the final invoices and all other required documentation to the bank holding the Letter of Credit for payment to the Contractor.

Official acceptance will not be made until all work specified in the contract documents has been completed, all required inspections have been made, an acceptable performance test has been completed and the unit has attained commercial operation; however, at the option of the Owner, official acceptance may be made upon the satisfactory completion of an acceptance test performed after initial operation. Final payment will not be made until official acceptance is made by the Owner and all required certifications have been received, and a release of all claims against the Owner has been submitted.

In the event the Owner does not give official approval and acceptance of
* the work within ~~36~~ 24 months after the ~~date the shipment of equipment and~~ ~~materials from the factory was complete~~ because of any cause which is beyond the Contractor's control, the final payment will be made in the
* ~~manner as stipulated above~~ providing the equipment and materials are in accordance with the specifications as far as can be determined.

* GC.32.7 Administrative Expenses. One hundred per cent (100%) of administrative expenses shall be paid immediately upon signing of the contract.

twenty-fifth month

fob date on which the shipment was complete

*Revised per Contract
(PLN - 6104)
(EQUIPMENT & MATERIALS)
062873

GC.33 BEGINNING, PROGRESS, AND TIME OF COMPLETION OF WORK. Unless otherwise specified the Contractor shall begin the work under this Contract within 10 days after receipt of a notice to proceed from the Owner to be followed by the establishment of an irrevocable Letter of Credit in a mutually acceptable USA bank for the USA Dollar value of this Contract. The rate of progress shall be such that the work will be completed in accordance with the schedule named in the Contract Agreement. The Contractor shall furnish the Engineer a detailed schedule setting forth the procedure he proposes to follow and giving the dates he expects to start and to complete separate portions of the work. If in the opinion of the Engineer proper progress is not being maintained, changes shall be made in the Contractor's operations to assure proper progress.

GC.34 LIQUIDATED DAMAGES. The term "Unit" used hereinafter and in the
* Contract Agreement shall be understood to mean either Unit 1 or 2 including the specified accessories of either unit of the Semarang Steam Power Plant as applicable; it shall not be construed to mean the individual items of equipment which are furnished under this Contract.

Liquidated damages as specified herein and in the Contract Agreement shall apply to each unit individually, not collectively to both units. The term contract price used in the limitation of the maximum amount of liquidated damages shall be understood to mean the contract price of the equipment for the designated unit, not the aggregate contract price of equipment for both Units 1 and 2, except if an item of equipment is common to both units.

Liquidated damages to certain categories of equipment and materials are not specified in the Contract Agreement on a generating unit basis in which case the liquidated damages will be assessed on the basis specified in the Contract Agreement.

It is understood and agreed that time is of the essence of the contract. Should the Contractor fail to complete delivery of the equipment and materials included in this Contract within the time period or periods stipulated in the Contract Agreement after due allowance for any extensions of time which may be granted under the provisions of these contract documents, the Contractor shall pay to the Owner, as stipulated liquidated damages and not as a penalty, the amount of liquidated damages stated in the Contract Agreement for each day of default. The total amount of liquidated damages assessed for failure to comply with the specified delivery schedule shall not exceed
* 5 percent of the contract price for the equipment and materials excluding ocean freight, insurance, and port surcharges, spare parts,

The Owner shall have the right to deduct the liquidated damages from any moneys in its hands or otherwise due, or to become due, to the Contractor, or to sue for and recover compensation for such liquidated damages.

5 percent of the Base Contract Price for the equipment, materials, and spare parts, excluding ocean freight, ocean cargo insurance, loading, unloading, and port surcharges.

*Revised for Contract
GC-24

If the Engineer Owner certifies that the failure to complete the delivery within the time herein agreed upon is directly due, in whole or in part, to inability of the ~~Contractor~~ to clear equipment and materials through Indonesian customs as a result of decision of the Owner in accordance with Article GC.22.2 not to permit the Contractor to pay Indonesian taxes, the Contractor will not be liable for liquidated damages to the extent that such damages are due to such inability to clear customs.

GC.35 AID PROCUREMENT SOURCE AND ORIGIN REQUIREMENTS. The Contractor shall comply with the following AID requirements.

GC.35.1 Geographic Source Provisions. All equipment, materials, and other commodities furnished under this Contract shall have their source and origin from countries designated as eligible in AID Geographic Code 941.

"Origin" shall mean the country in which such equipment or material was mined, grown, or produced through manufacturing, processing, or assembly. "Source" shall mean the country or territory from which such equipment or material is shipped to Indonesia; except that when the equipment or materials are shipped to Indonesia from a free port or bonded warehouse in the form in which received therein, "source" shall mean the country or territory from which the equipment or material was shipped to such free port or bonded warehouse.

A produced commodity shall be deemed of country origin if as a result of manufacturing, processing, or assembly in such country, a commercially recognized new commodity is produced that is substantially different in basic characteristics or in purpose or utility from any of its imported components.

Equipment and materials which are normally imported into Indonesia and stocked therein in the form in which imported to meet a general demand in Indonesia for the item, shall be deemed as being of Indonesian source and origin.

No produced commodity shall be eligible for AID financing if it contains components from a Communist Bloc country. (A country not specified in AID Geographic Code 935).

No produced commodity shall be eligible for AID financing if such commodity contains any components which were imported into the producing country and such components were acquired by the producer in the form in which they were imported; and the total cost of such components (delivered at the point of production) amounts to more than 50 per cent of the lowest price (excluding the cost of ocean transportation and marine insurance) at which the supplier makes the commodity available for export sale, whether or not financed by AID. Indonesian source goods and services are ineligible for AID financing with the exception of insurance and certain commissions as set forth in the AID Guidelines.

No produced commodity shall be eligible for AID financing if such commodity has been transported to Indonesia by: a transportation medium owned, operated, or under the control of any Communist Bloc country; a vessel which AID, by written notice to the Owner, has designated as ineligible; or under any ocean or air charter which has not received prior approval by AID.

GC.36 BOOKS AND RECORDS. The Contractor shall maintain adequate books and records covering all transactions under or in connections with this Contract. The books and records shall be maintained for a period of not less than 3 years after the date of final payment under this Contract. The books and records shall be available for inspection and audit by the Owner and/or AID to insure compliance with the requirements of this Contract. If the Contract is for a fixed price, an audit as to cost will not be performed except for cost reimbursable items; however, they will be subject to audit for compliance with source and origin, transportation, and comparable requirements.

GC.37 LEGAL EFFECT OF CERTAIN AID APPROVALS AND DECISIONS. The parties hereto understand that AID has reserved certain approval rights including but not limited to, the right to approve the terms of this Contract, the Contractor, and any or all plans, reports, specifications, subcontracts, bid documents, drawings, or other documents related to this Contract and the project of which it is part. The parties hereto further understand and agree that AID, in reserving any or all of the foregoing approval rights, has acted solely as a lender to assure the proper use of United States Government funds, and that any decision by AID to exercise or refrain from exercising these approval rights shall be made as a lender in the course of financing the project and shall not be construed as making AID a party to the contract. The parties hereto understand and agree that

AID may, from time to time, exercise the foregoing approval rights, or discuss matters related to these rights and the project of which this Contract is part, with the parties jointly or separately, without thereby incurring any responsibility or liability to the parties jointly or to any of them.

Any approval or failure to disapprove by AID of any plan, report, specification, contract, bid document, drawing or other documents shall not bar the Owner or AID from asserting any right or relieve Contractor of any liability which Contractor might otherwise have to the Owner or AID, because of such plan, specification, contract, bid document, drawing or other document, or any performance or failure of performance thereunder, or under any AID Contractor's or supplier's certificate.

GC.38 INELIGIBLE FIRMS. No equipment, material, or service shall be furnished under this Contract by any firm on the list of suspended, debarred, or ineligible firms maintained by AID. No USA firm or any other firm which is more than 50 per cent beneficially owned by a USA firm shall furnish equipment, materials, or services under this Contract if the USA firm is not in compliance with its equal employment opportunity obligations under Executive Order 11246, as amended and orders issued thereunder.

GC.39 COMMUNIST BLOC MATERIALS. No equipment, materials, or services, except ocean freight in connection with equipment and materials which are not AID financed, shall be furnished under this Contract if the source and origin thereof is a Communist Bloc country. A Communist Bloc country is defined as a country excluded from the Free World as specified in AID Geographic Code 935.

GC.40 SHIPPING. Not less than 50 per cent of the gross tonnage of equipment and materials furnished under this Contract shall be transported by privately owned USA flag commercial vessels to the extent that such vessels are available at fair and reasonable rates for USA flag vessels. The Contractor shall furnish documentation regarding the nationality of the vessels used to transport the equipment and materials.

The costs of ocean transportation and related delivery services will not be eligible for AID financing if the shipment is made:

a. On a carrier under the flag of a country not included in AID Geographic Code 941, unless shipment on such carrier has been approved by AID prior to shipment.

b. On a carrier under the flag of the Republic of Indonesia

c. **On any carrier designated by written notice to the Owner as ineligible by AID**

d. **Under any charter covering full or part cargo which has not received prior approval by AID.**

e. **On any carrier owned, operated, or under the control of any Communist Bloc country.**

GC.41 DIVERSION RIGHTS. AID reserves certain diversion and vesting rights to the extent and as provided under the Loan Agreement, Letters of Implementation, and other related documents. These rights may be exercised at the option of AID in the event of default by the Owner of agreements with AID which are not remedied, if an extraordinary situation shall arise which makes it improbable that the purposes of the loan will be attained or that the Owner will be able or willing to perform its obligations under AID agreements, or if disbursement by AID would be unlawful. The diversion and vesting rights include, among others, the provision that AID may direct the transfer of title to AID of goods financed by AID, provided the goods are from a source outside Indonesia, are in deliverable condition, and have not been off-loaded in Indonesia. In the event of exercise of these rights, the Contractor shall abide by the instructions of AID relative thereto.

GC.42 GOVERNMENTAL AUTHORIZATIONS. The Owner will assist the Contractor in obtaining any required authorizations for re-exporting tools, equipment, test equipment, unused materials, and the like, all of which are and remain the property of the Contractor, from Indonesia at the conclusion of the work. The Contractor will be required to re-export all of his equipment from Indonesia at the conclusion of his technical services. Any such materials which are to be retained or sold in Indonesia shall be disposed of in accordance with the regulations of the Government of Indonesia.

The Contractor, pursuant to its agreement to arrange for the USA export shipment on behalf of the Owner, will apply for any required export license. Whoever is the proper party under the applicable regulations shall make prompt application for any preference rating or other USA governmental authorizations which may be required to permit the manufacture of the equipment. The parties shall assist each other in every manner reasonably possible in securing such authorizations as may be required.

GC.43 CUSTOMS CLEARANCE. The Owner will be responsible for Indonesian customs clearance of all equipment and materials furnished under this Contract. Customs clearance will take place at the Port of Semarang, at the

international airport at Jakarta, or other appropriate port. All customs duties, taxes, and license fees necessary for such clearance will be for the account of the Owner.

It is contemplated that large amounts of equipment, materials, supplies, tools, etc. will be loaded overside ship directly onto barges. The Contractor shall furnish to the Owner and Engineer, necessary documentation so that prior arrangements can be made with customs officials for expeditious off loading from ocean going vessels into barges. Where necessary the Owner will arrange for unloading under customs bond to barges in order to facilitate ocean vessel unloading.

Documentation for customs clearance shall be submitted at least three weeks prior to the anticipated arrival of equipment and materials in Indonesia. Ten copies of the following documents shall be submitted to the Owner and two copies shall be submitted to the Engineer:

Bill of Lading
Packing List
Insurance Certificate
Invoice

The above documents shall be prepared in accordance with the applicable requirements of Article GC.32.1.1.

After customs clearance by the Owner and release of the goods by customs officials, the Owner will be responsible for transport from Semarang Harbor by barge, rail or truck to the site.

Tools and equipment for use during construction supervision but which are remain the property of the Contractor and which are to be re-exported the Contractor from Indonesia at the conclusion of the work shall be carefully documented and specially listed to facilitate both import and export. The Contractor shall determine prior to shipment the customs regulations applicable to this special case as well as normal import rules and regulations applicable.

GC.44 IMPORTED PERSONNEL. The Contractor shall submit to the Owner data on all personnel he intends to bring into Indonesia for the performance of the work. These data shall include the name and present address of each person, his intended assignment and responsibility in connection with the work, and a concise resume of his experience in the type of work to which he will be assigned. These data shall be submitted not later than 60 days prior to their expected arrival in Indonesia.

The Owner will review the information submitted and advise the Contractor of the suitability of the personnel listed. Any personnel found to be unsatisfactory to the Owner shall be replaced with personnel satisfactory to the Owner. The Owner's approval must be secured prior to withdrawal of any non-Indonesian personnel assigned to the work. Requests for withdrawal shall include the reasons for withdrawal, the duration of the withdrawal, or alternatively, data on the replacement personnel to be imported by the Contractor. If at any time after arrival of non-Indonesian personnel, the Owner shall notify the Contractor that any of them are in the Owner's opinion unsatisfactory, such persons shall be withdrawn and replacements satisfactory to the Owner shall be provided at the Contractor's expense.

Any expenses associated with illness of the Contractor's personnel, including replacement thereof, shall be at the Contractor's expense.

Costs of passports, visas, travel documents, inoculations and other incidental expenses incurred by the Contractor's non-Indonesian employees and their dependents occasioned by travel to and from Indonesia shall be borne by the Contractor.

The Owner will not furnish living quarters for the Contractor's personnel and families. The Contractor's employees may import for their personal use a reasonable quantity of household goods and personal effects. These goods will be exempt from import duties and taxes provided those not consumed are re-exported. The Owner will be the sole judge as to what constitutes a reasonable quantity based upon the rules and regulations of the Government of Indonesia. The non-Indonesian employees may import one automobile per family for their personal use exempt from import duties and taxes provided it is re-exported.

The Contractor and the expatriate personnel of the Contractor shall respect all Indonesian laws, rules, and regulations and shall not interfere with Indonesian political or religious affairs either directly or indirectly and shall comply with such other rules and regulations as the Contractor, Owner or Engineer may establish from time to time with respect to the expatriate personnel employed by the Contractor. The expatriate personnel of the Contractor shall work and live in harmony with their co-workers (both expatriate and Indonesian) employed on the work and at all times conduct themselves in an orderly manner. The Contractor and its expatriate personnel shall not engage, directly or indirectly, in any other employment, service, or business whatever, including dealings in real estate, nor shall they take part in local politics.

All expatriate personnel of the Contractor under this Contract shall be citizens or residents of a non-Indonesian Code 941 country, shall remain employees of the Contractor, and shall receive their salaries and allowances

directly from the Contractor. With regard to citizens or residents of the USA, the Contractor agrees not to discriminate against any employee or applicant for employment by reason of race, color, creed, sex or national origin in carrying out this Contract.

GC.45 REPORTING, SHIPPING, AND CLEARING DOCUMENTS. The Contractor shall provide all official forms and documentary information as shall be needed to satisfy the AID Loan.

GC.46 AID APPROVAL. This Contract and any amendment, modification, or assignment thereof shall not be effective unless and until approved by AID. Modifications not approved by AID will not be financed by AID.

GC.47 TERMINATION. Unless otherwise terminated under the provisions of the articles entitled RIGHT OF OWNER TO TERMINATE CONTRACT and TERMINATION FOR THE CONVENIENCE OF THE OWNER, this Contract shall be deemed terminated at the expiration of the guarantee period as provided for under the article entitled GUARANTEE.

GC.48 RELEASE OF INFORMATION. The Contractor shall not communicate or use in advertising, publicity, or sales releases, photographs or other reproductions of the work under this Contract, or descriptions of the size, dimensions, quantity, quality, or other information concerning the work unless prior written permission has been obtained from the Owner.

GC.49 AID GEOGRAPHIC CODES.

GC.49.1 AID Geographic Code 941 - Selected Free World. The United States (001 and 002), and any other independent country in the Free World*, excluding the cooperating country itself and the following:

Algeria	Greece	Netherlands
Andorra	Hong Kong	New Zealand
Australia	Iceland	Norway
Austria	Iraq	Portugal
Belgium	Ireland	Qatar
West Berlin	Israel	San Marino
Canada	Italy	Somali Republic
Cyprus	Japan	South Africa, Rep. of
Denmark	Kuwait	Southern Rhodesia
United Arab Republic (formerly Egypt)	Libya	Spain
	Liechtenstein	Syria
Finland	Luxembourg	Sweden
France	Malta	Switzerland
Germany, Fed. Rep.	Monaco	Yemen (Adan)

* "Free World" excludes communist countries or countries under communist domination, i.e., Union of Soviet Socialist Republics, Eastern Europe, Poland, North Viet Nam, North Korea, Mainland China, and other Chinese Communist-controlled areas, Outer Mongolia and Cuba.

United Arab Emirates
United Kingdom
Vatican City
Yugoslavia

GC.49.2 AID Geographic Code 935 Special Free World. Any area or country in the Free World, including the cooperating country itself.

Countries excluded from the Free World are as follows:

Cuba
China (Mainland) and Other Chinese Communist-Controlled Areas, including
- Manchuria
- Inner Mongolia
- Tsinghai Province
- Sikang Province
- Sinkiang
- Tibet
- The former Kwantung Leased Territory
- The present Port Arthur Naval Base area
- Liaoning Province

Eastern Europe
- Albania
- Bulgaria
- Czechoslovakia
- East Germany (Soviet Zone of Germany and Soviet Sector of Berlin)
- Estonia
- Hungary
- Latvia
- Lithuania
- Romania

Korea, North
Outer Mongolia
Poland
Union of Soviet Socialist Republics (USSR)
Viet-Nam (North)

GC.50 CONTRACTOR'S PROPOSAL. The conformed documents reflect a negotiated contract between the Owner and the Contractor using as a starting point the specifications and addendums issued by the Owner and the Contractors proposal 4 June 1974 number KC-3340 and the Contractor's Supplemental letter dated 11 June 1974.

The contract documents as conformed herein supersede the Contractor's proposal letter dated 4 June 1974 numbered KC-3340 and the conditions of sale attached to the proposal and the Contractor's Supplemental letter Proposal dated 11 June 1974. In cases of any conflict or inconsistency between the contract document provisions and clauses and the above referenced proposal, the conformed contract language shall govern and not the Contractor's proposal referenced above.

PART 1 - GENERAL REQUIREMENTS

TABLE OF CONTENTS

		Page
Section 1A - GENERAL DESCRIPTION AND SCOPE OF THE WORK		1A-1 through 1A-4
1A.1	General	1A-1
1A.2	Work Included Under These Specifications	1A-1
1A.3	Performance Guarantees	1A-2
1A.4	Miscellaneous Materials and Services	1A-2
1A.5	Work Not Included Under These Specifications	1A-3
1A.6	Schedule	1A-3
1A.7	Contractor's Services	1A-3
1A.8	Training Program	1A-4
Section 1B - GENERAL EQUIPMENT SPECIFICATIONS		1B-1 through 1B-17
1B.1	General	1B-1
1B.2	Referenced Specifications and Standards	1B-1
1B.3	Quality Assurance	1B-1
1B.4	Factory Assembly	1B-1
1B.5	Packaging	1B-2
1B.6	Protection	1B-2
1B.7	AID Emblem	1B-3
1B.8	Weatherproofing	1B-3
1B.9	Source of Materials and Repair Parts	1B-3
1B.10	Design Coordination	1B-3
1B.11	Correction of Manufacturing Errors	1B-3
1B.12	Equivalent Materials and Equipment	1B-3
1B.13	Tools	1B-4
1B.14	Compressed Air	1B-4
1B.15	Control Power	1B-4
1B.16	Auxiliary Power	1B-5
1B.17	Welding	1B-5
1B.18	Shop Coating	1B-5
1B.19	Alignment and Balance	1B-6
1B.20	Lubrication	1B-6
1B.21	Drive Units	1B-6
1B.22	Shaft Couplings	1B-7
1B.23	Safety Guards	1B-7
1B.24	Equipment Bases	1B-7
1B.25	Instrumentation	1B-7
1B.26	Electrical Accessory Devices	1B-10
1B.27	Nameplates	1B-11
1B.28	Factory Prewired Electronics Systems Cabinets	1B-12
1B.29	AC Motor Starters	1B-12
1B.30	Raceway	1B-12
1B.31	Wiring	1B-13

	Page
1B.32 Cable Termination Provisions	1B-15
Motor Control Center Specification and Data Sheet	1B-16A
Motor Control Center Specification and Data Sheet	1B-16B
Shipping Container Identification	1B-17
Section 1C - ENGINEERING DATA	1C-1 through 1C-5
1C.1 General	1C-1
1C.2 Correspondence	1C-1
1C.3 Performance Curves	1C-1
1C.4 Motor Information	1C-1
1C.5 Drawings	1C-1
1C.6 Instruction Manuals	1C-4
Typical Equipment Instruction Book Covers	A6104-030273
Section 1D - ELECTRIC MOTORS	1D-1 through 1D1-12
1D.1 General	1D-1
Subsection 1D1 - Integral Horsepower AC Motors, 600 Volts and Below	1D1-1 through 1D1-12
1D1.1 General	1D1-1
1D1.2 Codes and Standards	1D1-1
1D1.3 Rating	1D1-1
1D1.4 Nameplate Data	1D1-1
1D1.5 Terminal Markings	1D1-1
1D1.6 Design and Construction	1D1-2
1D1.7 Factory Tests and Inspection	1D1-10
1D1.8 Motor Specification and Data Sheets	1D1-10
1D1.9 Manufacturers	1D1-11
Motor Information Sheet	1D1-12

Section 1A - GENERAL DESCRIPTION AND SCOPE OF THE WORK

1A.1 GENERAL. This section covers the general description, scope of work, and supplementary requirements for equipment, materials, and services included under these specifications.

The equipment furnished under these specifications will be incorporated into a new steam power plant to be constructed on a site near the harbor at Semarang, Indonesia. The plant will have two oil fired steam electric generating units of approximately 50 megawatts capacity each.

1A.2 WORK INCLUDED UNDER THESE SPECIFICATIONS. The work under these
* specifications shall include furnishing the ~~surface condenser and~~ auxiliary equipment; delivery of same to Port of Semarang, Indonesia and unloading from transport; providing services and miscellaneous materials; all complete as specified herein and in accordance with the contract documents defined in Article GC.1 of the GENERAL CONDITIONS.

* ~~The equipment and materials furnished under these specifications for each of the new generating units shall include the following major items:~~

~~One surface condenser for each unit, shop tubed~~

~~One air ejector and one steam space priming ejector for each unit~~

~~Two condensate pumps and motors for each unit~~

** The equipment and materials furnished under these specifications ~~which~~ are common to both Units 1 and 2 ~~shall~~ include the following:

~~A total of~~ Three circulating water pumps and motors

* ~~A total of three traveling water screens with accessories~~

Equipment, materials, and accessories furnished shall be delivered to the Port of Semarang, Indonesia and unloaded from the transport, under these specifications. They will be received, transported to the plant site, unloaded, stored, and erected under separate specifications. Unloading from ships and storing at the site will not constitute acceptance.

*Not included in Contract
**Revised per Contract

The Contractor shall provide drawings and engineering data, manufacturer's field services, tools, instruction manuals, miscellaneous materials and services, and shall participate in design conferences, all as specified herein.

1A.3 PERFORMANCE GUARANTEES. The equipment furnished under these specifications will be tested by the Owner after installation to demonstrate its ability to operate satisfactorily under the conditions specified and to fulfill the warranties and guarantees set forth herein.

Specific performance guarantees are specified in the detailed specifications. Should the tests indicate that the equipment fails to meet guaranteed performance, the Contractor shall take immediate steps to correct the deficiencies in accordance with the requirements specified under GUARANTEE in the GENERAL CONDITIONS. ~~Failure to meet guaranteed performance~~
* ~~will result in the assessment of liquidated damages as specified in Article 8A.8.~~

1A.4 MISCELLANEOUS MATERIALS AND SERVICES. Miscellaneous materials and services not otherwise specifically called for shall be furnished by the Contractor in accordance with the following:

All nuts, bolts, and gaskets between components and equipment furnished under these specifications and ~~for all connections~~
* ~~to the Owner's circulating water piping~~

All piping integral to or between any equipment furnished under these specifications, ~~except as otherwise specified and excluding~~
* ~~the air removal header between the surface condenser and the air removal equipment~~ and excluding any circulating water piping

All necessary connections for the Owner's piping and instruments

One year's supply of all lubricants and greases. Specifications shall be provided for all lubricants required.

All necessary instrument and power and control wiring and raceways integral to any equipment furnished under these specifications. This shall include terminal blocks and internal wiring to these terminal blocks for equipment requiring external connection.

Coupling guards for all exposed shafts and couplings

Leveling blocks, subsoleplates, soleplates, thrust blocks, matching blocks, and shims

Erection drawings, prints, information, instructions, and other data for use by the erection contractor

*Not included in Contract

The use of all special tools required for erection of the equipment that are not included with the maintenance tools, including shipping costs to and from the jobsite

1A.5 WORK NOT INCLUDED UNDER THESE SPECIFICATIONS. The following items of work will be furnished by the Owner:

Transporting from the Port of Semarang, unloading and storing at the plant site, and field erecting all equipment

Foundations, foundation bolts, and sleeves

Field office furnishings, supplies, telephone service, and equipment for the manufacturer's field representatives

Motor controls and starters not otherwise specified to be furnished under these specifications

Grouting materials and placing thereof

Permanent electric wiring to connect equipment terminal boxes to the plant electrical system

Solvents and cleaning materials

Finish painting of all equipment except as specified herein

Operating personnel for startup and tests

1A.6 SCHEDULE. The Contractor shall schedule production and shipment of the equipment and materials to assure ~~delivery at the end of ships~~ * ~~tackle at the Port of Semarang/ Indonesia during February 1975/~~

Within 30 days after the contract award, a shipping schedule for major components shall be submitted by the Contractor for joint approval of the Owner and the Engineer.

1A.7 CONTRACTOR'S SERVICES. The services called for in WORK INCLUDED UNDER THESE SPECIFICATIONS shall be in accordance with the following.

1A.7.1 Submittal of Engineering Data. Drawings and other engineering data for the specified equipment and materials are essential to the design and subsequent construction of the entire generating unit. Time is of the essence in completing each phase of the work so that both units can be in commercial operation on the scheduled dates.

The Contractor will be required to submit drawings and engineering data in accordance with the schedule and requirements specified under Section 1C - ENGINEERING DATA, to assure compliance with the overall construction and operating schedule.

*Revised per Contract (PLN - 6104 (SURFACE CONDENSER - M-12A) 113073

fob shipment martime port of shipment on or before 21 calendar months from the date of Owner's signature to this Contract.

1A.7.2 Manufacturer's Technical Field Services. Upon request by the Owner, the Contractor shall provide the services of one or more technical field representatives to advise and assist the Owner in the erection of the equipment and materials furnished under these specifications, to inspect the equipment after erection, and to advise the Owner's personnel on proper operation of the equipment.

The Contractor shall state in his Proposal the costs to the Owner for providing such services. A per diem service cost for each representative, exclusive of living and travel expenses shall be stated based on an 8 hours per day 6 day work week. The hourly rate for overtime work in excess of 48 hours per week shall also be stated. The per diem rate for service shall apply only during working days at the site and not during the seventh day of the week unless actually engaged in work at the site. The per diem rate will apply while the person is in transit to Indonesia.

The number of days of transportation time for which per diem will be paid shall be as agreed upon by the Contractor and the Owner based on actual travel time, but shall not exceed three days each way for travel to and from the United States.

Living and transportation expenses within Indonesia will be reimbursed by the Owner in rupiahs at actual cost, but not to exceed the per diem stated in the Proposal.

Transportation costs to and from Indonesia will be reimbursed at actual cost. Transportation fare shall not exceed economy jet fare by the shortest practical route. Transportation costs shall include passport and visa costs, innoculations required, and living expenses incidental to travel.

1A.7.3 Design Conference. Within 30 days after award of contract the Contractor's design engineer shall attend a design conference at a time and place in the USA mutually agreed upon to discuss matters relative to the execution of this Contract. Additional design conferences shall be held as required thereafter to expedite the work.

1A.7.4 Tools. The Contractor shall furnish and ship with the equipment one set of all special tools required for the erection, dismantling, or maintenance of the equipment as specified in Section 1B of these specifications.

1A.7.5 Instruction Manuals. Instruction manuals shall be furnished in accordance with the requirements stated in Section 1C of these specifications.

1A.8 TRAINING PROGRAM. The Engineer will conduct a training program in the United States for training Owner's supervisory operating personnel for the Semarang Steam Power Plant. If requested by the Engineer, the Contractor, and his manufacturers, shall make their manufacturing facilities available for inspection trips by the Owner's trainees and shall assist in discussing the equipment and its design, operation, and maintenance.

Section 1B - GENERAL EQUIPMENT SPECIFICATIONS

1B.1 GENERAL. These General Equipment Specifications apply in general to all equipment and materials. Certain requirements specified herein will obviously not apply to the particular equipment and materials furnished under these specifications; however, where applicable to a particular item of equipment or material, these requirements shall apply.

These General Equipment Specifications are supplementary to the detailed specifications; if requirements in conflict with the requirements specified herein are specified in the detailed specifications, the detailed specifications shall govern to the extent of such conflict.

1B.2 REFERENCED SPECIFICATIONS AND STANDARDS. The specifications, codes, and standards referenced in these specifications (including addenda, amendments, and errata) shall govern in all cases where references thereto are made. In case of conflict between the referenced specifications, codes, or standards and these specifications, the latter shall govern to the extent of such difference.

The specification, code or standard applied in each case shall be the latest revision adopted and published at the date of taking bids. Any conflict between standards shall be referred to the Engineer who will determine which standard shall govern.

1B.3 QUALITY ASSURANCE. The Contractor shall maintain a quality program that provides that equipment, materials, and services under these specifications whether manufactured or performed within the Contractor's plant or at any other source shall be controlled at all points necessary to assure conformance to contractual requirements. The program shall provide for the prevention and ready detection of discrepancies and for timely and positive corrective action. The Contractor shall make objective evidence of quality conformance readily available to the Owner and the Engineer. Instructions and records for quality assurance shall be controlled.

1B.4 FACTORY ASSEMBLY. Equipment shall be shipped completely factory assembled, except when the physical size, arrangement or configuration of the equipment, or shipping and handling limitations make the shipment of completely assembled equipment impracticable, in which case the equipment shall be assembled and shipped as stated in the Contractor's proposal.

When proposals are submitted without statements describing sectional shipments, it will be understood that no field assembly of the equipment will be required and the Contractor shall be responsible for all cost encountered in the field for assembly of sections, accessories or appurtenances not listed in the Proposal as requiring field assembly.

1B.5 PACKAGING. All equipment and materials shall be suitably coated, wrapped, or covered and boxed or crated for export shipment and to prevent damage or deterioration during handling and storage at the site.

All accessory items shall be shipped with the equipment. Boxes and crates containing accessory items shall be marked so that they are identified with the main equipment. The contents of each box and crate shall be indicated by markings on the exterior.

An itemized list of contents shall be attached to the outside of each box or crate in a weather-resistant envelope. An identical list shall be included inside each box or crate. The lists shall be plainly marked and placed in an accessible location to facilitate receipt and inspection.

Each package or shipping unit shall be clearly marked as indicated on the sheet entitled "SHIPPING CONTAINER IDENTIFICATION" included at the end of this section.

Packaging or shipping units shall be designed within the limitations of the unloading facilities of the receiving ports and the ship which will be used for transport. Ships with special heavy capacity unloading rigging may be required for large units of equipment. It shall be the Contractor's responsibility to investigate these limitations and to provide suitable packaging and shipping to permit unloading at Jakarta or the Port of Semarang. "On deck" shipment will not be permitted unless prior approval has been obtained from the Engineer.

Electrical equipment, controls and insulations shall be protected against moisture and water damage. All external gasket surfaces and flange faces, couplings, motor pump shafts, bearings and like items shall be thoroughly cleaned, and coated with rust preventive compound as specified above, and protected with suitable wood, metal or other substantial type covering to insure their full protection.

1B.6 PROTECTION. Coated surfaces shall be protected against impact, abrasion, discoloration, and other damage. Surfaces which are damaged shall be repaired.

All exposed threaded parts shall be greased and protected with metallic or other substantial type protectors. All female threaded openings shall be closed with forged steel plugs. All piping, tubing, and conduit equipment connections shall be sealed with metallic or other rough usage covers and taped to seal the interior of the equipment piping, tubing, or conduit.

Provisions shall be made to ensure that water does not enter any equipment during shipment or in storage at the plant site.

Returnable containers and special shipping devices shall be returned by the manufacturer's field representative at the Contractor's expense.

1B.7 AID EMBLEM. All shipping containers shall carry the official AID clasped hands emblem. The emblem affixed to each shipping container shall be affixed in such a manner which assures that the emblem will remain legible until the shipment reaches the consignee. Size of the emblem in every case shall be large enough to be clearly visible at a reasonable distance. A list of emblem suppliers is available from AID.

The official AID clasped hands emblem shall be prominently displayed on all ships during loading and unloading when their cargo consists entirely of AID financed goods. Ship charterers shall include instructions relative to display of the emblem in the charter party agreements.

1B.8 WEATHERPROOFING. All outdoor equipment and all appurtenances shall be designed for satisfactory operation during 60 mile per hour wind and driving rain. All exposed unpainted parts shall be fabricated of corrosion resisting metal. All ventilating openings shall be louvered on outdoor equipment to prevent entrance of rain under weather conditions described above. All ventilating openings on outdoor equipment shall be equipped with fine mesh monel filters and stainless steel bug screens.

1B.9 SOURCE OF MATERIALS AND REPAIR PARTS. Equipment and accessories furnished shall be from a reputable manufacturer currently engaged in production of such materials:

Individual parts shall be manufactured to standard sizes and gages so that repair parts, furnished at any time, can be installed in the field.

1B.10 DESIGN COORDINATION. The Contractor shall be responsible for the selection and design of equipment and materials which will provide the best coordinated performance of the entire system. Components of rotating equipment shall be selected so that the natural frequency of the complete unit is not at or critically near the operating range of the unit.

1B.11 CORRECTION OF MANUFACTURING ERRORS. Equipment and materials shall be complete in all respects within the limits herein outlined. All manufacturing errors or omissions required to be corrected in the field shall be done by the manufacturer or his duly authorized representative at the Contractor's expense.

1B.12 EQUIVALENT MATERIALS AND EQUIPMENT. Whenever a material or article is specified or described by using the name of a proprietary product or the name of a particular manufacturer or vendor, the specific item mentioned shall be understood as establishing the type, function, and quality desired.

Other manufacturers' products will be considered provided sufficient information is submitted to allow the Engineer to determine that the products proposed are equivalent to those named.

1B.13 TOOLS. The Contractor shall furnish and ship with the equipment one set of all special tools required for the erection, dismantling, or maintenance of the equipment. The tools shall be shipped in separate heavily constructed wooden boxes provided with hinged covers and padlock hasps.

Maintenance tools shall be boxed separately and the boxes shall be marked as indicated on the sheet entitled "SHIPPING CONTAINER IDENTIFICATION".

Whenever possible, boxes containing tools shall be packed into larger containers with the equipment.

A weatherproofed itemized list of the contents shall also be indicated on the outside of each box.

The maintenance tools shall include all special handling rigs, bars, slings, and cable. All tools shall be in new and unused condition.

1B.14 COMPRESSED AIR. Filtered, dried, oil-free compressed air will be supplied for operation of pneumatic instruments and control valves. Normal house service air will be supplied for operation of other pneumatic devices. The compressed air will be supplied at receiver pressure varying from 70 to 100 psi.

Pressure regulators shall be provided for pneumatic devices which operate at pressure levels other than receiver pressure. Pressure regulators shall be Fisher Controls Co. Model 67 FR with pressure gage, or acceptable equal.

1B.15 CONTROL POWER. Electrical power for control and instrumentation will be a nominal 240 volt, single phase, 50 hertz, alternating current, or a nominal 250 volt direct current. The Contractor shall provide any devices required for proper operation and protection of the equipment during electrical power supply fluctuations described in the following paragraphs.

All dc electrical control and instrumentation devices shall be designed for continuous operation on an ungrounded station battery which will float on trickle charge at 258 volts. The Contractor shall guarantee satisfactory operation when the equipment is continuously energized at any voltage from 200 to 280 volts dc, with ambient temperatures as specified. Electrical devices served from this supply shall not impose any ground connections on it.

All alternating current control and instrumentation devices shall, unless otherwise specified, be designed for operation on a nominal 240 volt, 50 hertz, single phase, alternating current system. The Contractor shall guarantee satisfactory operation when the equipment is continuously energized at any voltage from 190 to 250 volts alternating current. Equipment required for operation at other nominal voltages shall be guaranteed to operate satisfactorily over proportional voltage variations. The dropout voltage shall be less than 140 volts for relays and 175 volts for contactors and starters.

All alternating current and direct current devices shall be guaranteed to operate satisfactorily under voltage conditions specified in the above paragraphs and at a range of ambient temperatures up to 50 C.

1B.16 AUXILIARY POWER. Auxiliary equipment, such as motors, transformers, and rectifiers, requiring electrical power shall be designed to operate from one of the nominal electrical power sources as follows:

Volts	Phase	Hertz
4160	3	50
416	3	50
240	1	50
250	DC	--

Preferred ac motor ratings shall be in accordance with the following schedule:

Horsepower	Volts	Phase
Below 3/4	220	1
3/4 to 250	380	3
250 and above	4000	3

Emergency motors shall be designed to operate on nominal 250 volts dc with voltage variations as described for dc control power.

Variations from preferred motor design voltages must be acceptable to the Engineer.

1B.17 WELDING. If the manufacturer has special requirements relating to the welding procedures for welds at the terminals of the equipment to be performed under separate specifications, the requirements shall be submitted to the Engineer in advance of all erection work.

1B.18 SHOP COATING. All metallic surfaces subject to corrosion shall be protected by suitable coatings applied in the shop. Surfaces which will be inaccessible after assembly shall be protected for the life of the equipment. The surfaces shall be cleaned and prepared in the shop. All mill scale, oxides, and other coatings shall be removed. Sand or grit blasting of internal areas which will be exposed to steam or treated feedwater will not be allowed. Exposed surfaces shall be finished smooth, thoroughly cleaned, and filled as necessary to provide a smooth uniform base for painting. Surfaces to be finish painted after installation, or requiring paint for corrosion protection until installation, shall be shop painted with one or more coats of primer as hereinafter specified.

1B.18.1 Painting. Transformers, switchgear, and other electrical equipment shall be shop finished with one or more coats of primer and two coats of high grade oil resistant enamel. The finish colors shall be manufac-

turer's standards, to be selected specifically by the Owner at a later date. The interior of all panels and switchgear shall be finished with gloss white enamel. A sufficient quantity of paint in each color shall be furnished to provide one complete coat for touchup.

Shop primer for steel and iron surfaces shall be Koppers "622 Rust Penetrating Primer", Mobil "13-R-50 Chromox QD Primer", or Tnemec "77 Chem-Prime" unless otherwise specified.

1B.18.2 Preservative Coatings. Ferrous surfaces which should not be painted shall be coated with rust preventive compound, Houghton "Rust Veto 334" or Rust-Oleum "R-9".

1B.18.3 Galvanizing. When so specified in the detailed specifications, structural steel members and bolts shall be galvanized. After all cutting, punching, reaming, drilling, and capping have been completed, structural steel members shall be "pickled" in accordance with the latest accepted practice, to remove all scale, rust, grease, and other impurities and then hot-dip galvanized in accordance with ASTM A123.

When specified to be galvanized in the detailed specifications, erection and structural bolts shall be galvanized in accordance with ASTM A394 for galvanized steel transmission tower bolts.

1B.19 ALIGNMENT AND BALANCE. All rotating parts shall be true and dynamically balanced. Excessive noise or vibration will be sufficient cause for rejection of the equipment. All rotating equipment shall be balanced at the factory.

1B.20 LUBRICATION. Equipment shall be lubricated by systems designed for continuous operation. Lubrication systems shall not waste lubricants and shall not require attention during startup and shutdown, or more frequently than once weekly. If pressure greasing of the equipment is required, the Contractor shall furnish grease guns for the Owner's use in maintenance.

Oil lubricant level indicators shall be furnished and marked to indicate proper levels under both standstill and operating conditions.

1B.21 DRIVE UNITS. Speed changing equipment furnished as a part of the equipment specified shall conform to the requirements herein.

The nominal horsepower rating of each drive unit shall be at least equal to the theoretical brake horsepower required to drive the equipment under full load, including all losses in speed reducers and power transmission.

The nominal input horsepower rating of each gear or speed reducer shall be at least equal to the nominal output horsepower of the drive motor or to the maximum power requirement for the driven equipment under the design conditions specified, whichever is greater.

Drive units shall be designed for continous service and shall include provisions which will prevent oil leakage around shafts.

1B.22 SHAFT COUPLINGS. Shaft couplings shall be used between all drives and driven equipment. Couplings shall be attached to driver and driven shafts by press fits and keys.

Shaft couplings shall be sized to transmit the maximum brake horsepower requirements of the driven equipment with a service factor of not less than 2.

Couplings shall be of the all metal lubricated gear flexible type, Koppers "Fast" or acceptable equal.

On applications where the motor is furnished under separate specifications, the motor half coupling shall be machined to the motor shaft dimensions on the motor drawing reviewed by the Engineer, and shipped to the motor supplier for shop mounting. The responsibility for proper fit of the coupling halves shall rest with the Contractor.

1B.23 SAFETY GUARDS. Guards shall be provided for protection of personnel from all exposed moving and/or rotating machine elements.

Each guard shall be fabricated from ASTM A36 steel plate having a minimum thickness of 3/16 inch and designed for easy installation and removal. Necessary supports and accessories shall be furnished with each guard.

Guards for outdoor installation shall be galvanized.

1B.23.1 Horizontal Shaft Equipment. Safety guards for horizontal shafts, shaft couplings, belt sheaves, etc. shall be of the inverted "U" design with sides extending to the equipment base or base plate.

1B.23.2 Vertical Shaft Equipment. Safety guards for vertical shafts, shaft couplings, etc. shall be of 360 degree construction with bolted vertical joints. Hinged sections shall be provided for inspection of couplings and glands.

1B.24 EQUIPMENT BASES. A cast iron or welded steel base plate shall be provided for all rotating equipment which is to be installed on a concrete base. Each base plate shall support the unit and its drive assembly, shall be of a neat design with pads for anchoring the units, shall have a raised lip all around, and shall have a threaded drain connection.

1B.25 INSTRUMENTATION. Accessory instrumentation components furnished with the equipment shall be in accordance with the requirements stated herein unless otherwise specified in the detail specifications. The devices specified shall be of the manufacture and model number herein specified, or an acceptable equal.

These devices shall be constructed in accordance with the latest applicable requirements of ANSI, ISA, and NEMA.

Permanently affixed, stainless steel tags stamped with the Engineer's tag number and a description of its use shall be furnished on all pressure switches, level switches, temperature switches, temperature elements, and solenoid valves.

Unless otherwise specified, all pressure and temperature instruments shall have metric scales. Scales shall be in kilograms per square centimeter for pressure instruments and in degrees centigrade for temperature instruments.

1B.25.1 Limit Switches. Limit switches, except those integrally mounted on motor operated valves, shall be selected from the following alternates:

(a) National Acme Company "Snaplock" Series SL. Switches shall have not less than two dpdt switch elements.

(b) Honeywell "Microswitch" DTF2-2RN, or variation thereof, with two dpdt switch elements

Limit switches shall be constructed to withstand the temperatures encountered in the actual service. Explosionproof construction shall be furnished where required by applicable code or the detailed specifications.

1B.25.2 Pressure Switches. Pressure switches shall be selected as follows:

(a) Static switches shall be Static "O" Ring.

(b) Differential pressure switches for low range application shall be manufactured by FW Dwyer.

(c) Differential pressure applications requiring both indication and pressure switch contacts shall be implemented with equipment manufactured by Barton Instrument Corporation regardless of the range.

Pressure switches shall be furnished in explosionproof construction where required by applicable code or the detailed specifications. Each pressure switch shall be specifically selected for the service in which it is used. The acceptability of each switch with respect to range, overpressure capability, capability, repeatability, and deadband shall be demonstrated to the Engineer.

1B.25.3 Temperature Switches. Temperature switches shall each consist of a thermocouple as described under "Temperature Detectors" and an electronic instrument. Electronic instruments shall be Rochester Instrument Systems, Inc., Series ET-205, complete with dual, double-pole, double-throw relays wired to terminals. Each of the two electronic instrument

relays in a temperature switch shall operate from an independent, calibrated set point. Electronic instruments shall be suitable for use with ISA Type K thermocouples.

1B.25.4 Level Switches. Level switches shall be Magnetrol having float and body construction appropriate to the service conditions of the systems to which they are connected. Switch elements shall be of the mercury bottle type magnetically coupled to the float. Two switch elements shall be available at each level point monitored. Switches shall be reversible for NC or NO operation or shall be double throw construction. Switch element leads shall be of high temperature construction and terminated on terminal blocks within the switch housing. Switch housings shall be splashproof construction, unless otherwise specified.

1B.25.5 Solenoid Valves. Solenoid valves shall be manufactured by Automatic Switch Company. Valves shall be selected to incorporate body construction, trim materials, and internal arrangements suitable to the application and shall be acceptable to the Engineer. Solenoid enclosures shall be NEMA 4 unless otherwise specified. Solenoid coils shall be Class H high temperature construction and shall be suitable for continuous duty.

1B.25.6 Pressure Gages. Gages for control air supply and signal pressures integral to the instrument shall be in accordance with the control manufacturer's standards. All other gages shall be 4-1/2 inch Ashcroft "Duragauge". Dials shall be engraved with service legends, or separate nameplates of engraved laminated phenolic shall be attached to the gage faces to identify the service. Legends shall be as directed by the Engineer. All gages, except on control air service, shall have stainless steel movements and nylon bearings. Gages for panel mounting shall be Type 1377. Gages for separate mountings shall be Type 1379 with 1/2 inch NPT bottom connections. Pulsation dampeners shall be furnished with all gages except control air gages.

1B.25.7 Thermometers. Thermometers for local mounting shall be Ashcroft 5 inch dial AHT 6060 "Every Angle" bimetallic thermometers. Thermometers for panel mounting shall be Ashcroft 4-1/2 inch dial 6135 mercury actuated with Type 1377 case and stainless steel armored capillary tubing of length required for the installation. The dials shall be engraved with service legends, or separate nameplates of engraved laminated phenolic shall be furnished attached to the dial faces to identify the service. Legends shall be as directed by the Engineer. Thermowells shall be furnished for all thermometers and shall be extra heavy solid bored Type 316 stainless steel construction. They shall be threaded and designed to allow seal welding.

1B.25.8 Temperature Detectors. All detectors shall be of the dual element type. Detectors shall be ISA Type K (chromel-alumel) thermocouples with Type KX extension wire. Temperature detectors shall be of the stainless

steel sheathed, compacted magnesium oxide insulated type, and shall be ungrounded unless otherwise specified. Thermocouples and extension wire shall comply to the special limits of error contained in ANSI C96.1-1964.

Thermocouple assemblies shall be complete with cast iron weatherproof connection heads and nipples. Extension nipples, insulating bushings, and compression fittings shall be furnished if required for the application. Heads shall be designed for positive connection and for a terminal temperature differential of not more than 0.1 F. The thermocouple shall be spring loaded for positive contact with the wall. The lead wire for all related detectors shall be brought to common junction boxes.

Fluid system temperature detectors shall be equipped with extra heavy solid bored Type 316 stainless steel thermowells and extension nipples. The thermocouple, extension nipple, and head shall be arranged to permit removal and replacement of the thermocouple with the equipment in operation.

1B.26 ELECTRICAL ACCESSORY DEVICES. Electrical accessory devices shall be furnished in accordance with the requirements stated herein unless otherwise specified in the detailed specification sections.

1B.26.1 Electrical Instruments. All electrical indicating instruments shall be of the switchboard type with one per cent accuracy classification, shall be designed for semiflush mounting and, unless otherwise specified, shall be approximately 4 inches square. All instrument scales shall consist of black markings on a white background. Any instrument which is checked in the field and found to be inaccurate in excess of 2 per cent shall be returned to the Contractor for calibration or replacement without cost to the Owner. All ac instruments shall be designed for operation through 5 ampere current transformers secondaries and 120 volt potential transformer secondaries. Instruments shall be General Electric Type AB-40, Westinghouse Type 241, or acceptable equal.

1B.26.2 Control Relays. General service auxiliary relays shall be I-T-E Type J10A, J11A, J12A, J13P, or acceptable equal. Where current carrying requirements exceed the capacity of the J10A, auxiliary relays shall be General Electric Types HFA or HGA, Westinghouse Type MG-6 or acceptable equal.

Timing relays where the delay period may exceed 3 minutes shall be Agastat Series 7000 or acceptable equal.

1B.26.3 Control Switches. Control switches shall be 600 volt, 20 ampere, multistage, rotary type with a minimum of ten contacts. Switches shall have black, fixed, modern, pistol grip type handles and engraved black plastic escutcheon plates. Switches shall be Westinghouse Type W, General Electric Type SB-1, or acceptable equal.

1B.26.4 Push-buttons and Selector Switches. Push-buttons and selector switches shall be Square D, Class 9001, Type T or TS oiltight, Honeywell-Microswitch Type PT, or acceptable equal.

1B.26.5 Indicating Lights. Indicating lights shall be Honeywell-Micro Switch Type PTW with 387 lamps, transparent glass lenses, and appropriately sized resistors. Alternate equal indicating lights must be acceptable to the Engineer.

1B.26.6 Alarm Contacts. Alarm contacts for remote annunciation shall be suitable for operation at 250 volts dc.

1B.26.7 Molded Case Circuit Breakers. Molded case circuit breakers used in equipment covered under these specifications shall have 5000 amperes interrupting capacity at 250 volts dc and 10,000 amperes symmetrical interrupting capacity at 240 volts ac.

1B.26.8 Terminal Blocks. Terminal blocks shall be provided with white marking strips and, where permitted by the safety codes and standards, shall be without covers. Extra terminals in a quantity of not less than 25 per cent of the intraconnected terminals shall be provided on each terminal block for circuit modifications and for termination of all conductors in a multiconductor cable.

Fuses shall not be mounted on terminal blocks. Neither step type terminal blocks nor angle mounting of terminal blocks will be acceptable.

All terminal blocks, except internal terminal blocks in factory prewired electronic systems cabinets, shall be rated 600 volts and shall have strap screw terminals. Standard terminal blocks for 10 AWG and smaller conductors shall be General Electric Company Type EB-5 or acceptable equal. Terminal blocks shall be appropriately sized for larger incoming conductors. Shorting type terminal blocks shall be six point General Electric Company Type EB-5 or acceptable equal.

1B.26.9 Fuse Blocks. Where fuse blocks rated 30 amperes, 250 volts are required by the specifications or the manufacturer's design, they shall be modular type with bakelite frame and reinforced retaining clips. Blocks shall be Class H, Model No. 15530-R screw terminal fuse blocks and manufactured by Underwriters' Safety Device Co., 4332 North Kedzie Avenue, Chicago, Illinois 60618. Blocks for other current and voltage ratings shall be similar in construction and by the same manufacturer.

Article 1B.27 for Electrical equipment:

1B.27 NAMEPLATES. The nameplates for the power transformers shall be lettered in both English and Indonesian. Nameplates for other equipment shall be in English.

Nameplates shall be provided for switches and other devices and shall be lettered in English with legends and nameplates acceptable to the Engineer.

Panel mounted instruments shall have nameplates made of laminated black phenolic engraving stock with white core. The lettering shall be not less than 1/4 inch square, bold engraved through the black outside layers so that the letters appear white.

Nameplates for locally mounted instruments shall be attached to the faces of the instruments in a manner acceptable to the Engineer.

1B.28 FACTORY PREWIRED ELECTRONIC SYSTEMS CABINETS. Internal wiring in factory prewired electronic systems cabinets may be installed according to the Contractor's standard as to wire size insulation and method of termination on internal equipment. Identification of conductors may be done by insulation color coding identified on drawings or by printed wiring lists. Terminal blocks for connection of external circuits into factory prewired electronic systems cabinets shall meet all the requirements specified above under Terminal Blocks.

1B.29 AC MOTOR STARTERS. The Motor Control Center Specification and Data Sheet, following this section, shows the wiring of the ac motor starters which will be furnished by the Owner. The Contractor shall assure that the control wiring, including terminal designations, is compatible with the starter wiring as shown.

1B.30 RACEWAY. Unless specified otherwise, all raceway interconnections between devices, panels, boxes, and fittings shall conform to ANSI C80.1 and UL 6. All conduit connections shall be of the threaded type. Unless specified otherwise, all conduit shall be hot-dip galvanized rigid steel. All conduit entering outdoor enclosures shall enter through "Meyers Scru-Tite" hubs or threaded openings.

Double locknuts and bushings shall be provided at the termination of all conduit not terminated in hubs. Locknuts shall be designed to securely bond the conduit to the box or cabinet when tightened.

Insulating bushings with insulating inserts in metal housings shall be provided on conduit 1-1/4 inches and larger. Insulating bushings shall be grounding type. Standard bushings shall be galvanized.

Conduit fittings used on outdoor equipment shall be of heavy cast construction and shall be sealed and gasketed.

All conduit shall be installed in exposed runs parallel or perpendicular to dominant surfaces with right angle turns made of symmetrical bends or fittings. A run of conduit shall not contain more than the equivalent of four quarter bends, including those immediately at outlets and fittings. Bends in conduit shall be made without reducing the internal diameter of the conduit.

Conduit shall be supported at intervals not to exceed 5 feet by means of conduit clamps and clamp-backs.

Moisture pockets shall be eliminated from conduit installed on outdoor equipment. If water cannot drain to the natural opening in the conduit system, a hole shall be drilled in the bottom of a pull box or a "C-type" conduit fitting provided in the low point of the conduit run.

Conduit shall be securely fastened to all boxes and cabinets. Threads on metallic conduit shall project through the wall of the box to allow the bushing to butt against the end of the conduit. The locknuts both inside and outside shall then be tightened sufficiently to bond the conduit securely to the box.

The raceway system provided for all interconnecting wiring shall be acceptable to the Engineer.

1B.31 WIRING. In general, all devices furnished under these specifications and requiring electrical connnections shall be designed for wiring into junction boxes or cubicles with terminal blocks. Terminal blocks shall be provided for conductors requiring connection to circuits external to the specified equipment, for internal circuits crossing shipping splits, and where equipment parts replacement and maintenance will be facilitated.

All spare contacts on relays, control switches, limit switches or similar devices shall be wired to accessible terminal blocks for the Owner's future connections. All wiring leaving an enclosure shall leave from terminal blocks and not from other devices in the enclosure.

Auxiliary equipment such as terminal blocks, auxiliary relays or contactors shall be readily accessible. Auxiliary equipment shall be arranged in compartments, cubicles, or junction boxes that a serviceman will have direct access to the equipment without removal of barriers, cover plates, or wiring. Grouped terminal blocks for all external connections shall be provided.

Terminal blocks shall be grouped in instrument and control compartments for easy accessiblity unrestricted by interference form structural members and instruments. Sufficient space shall be provided on each side of each terminal block to allow an orderly arrangement of all leads to be terminated on the block.

A shorting type terminal block shall be installed at an accessible location for each current transformer. The shorting terminal block shall be the one nearest the current transformer.

Terminal blocks shall not be mounted in compartments containing cables or buses operating at voltages above 600 volts.

All wiring shall be conservatively selected for the electrical and environmental conditions of the installations. Unless otherwise specified or required otherwise to perform satisfactorily in a particular service, all

electrical conductor shall be Class B, stranded copper, 14 AWG or larger. Oil resistant and proper temperature application wiring shall be used throughout. MI cable is not acceptable. Control panel and cabinet wiring shall be stranded copper conductor with NEC Type SIS, cross-linked polyethylene insulation rated at 600 volts, designed for a maximum conductor temperature of 90 C, and shall meet the vertical flame test requirements per IPCEA S-19-81, Paragraph 6.19.6. Conductor insulation for other general service wiring shall be flame retardant polyethylene according to IPCEA S-19-81, Part 3.18. NEC Type SF-2 silicone rubber insulated cable with braided glass jacket shall be used where ambient conditions cause conductor operating temperatures to exceed 90 C.

Preinsulated ring-type terminals with crimp guides or preinsulated slotted spring spade terminals shall be provided on all control conductor terminals, except, noninsulated terminals shall be provided on devices equiped with individual fitted covers. Typical devices upon which control conductors shall be terminated with noninsulated terminals are General Electric Type SB-1 and Westinghouse Type W control switches and General Electric HEA and Westinghouse Type WL lockout relays.

Each terminal block, conductor, relay, breaker, fuse block, other auxiliary device, and terminal shall be permanently labeled to coincide with identification indicated on the drawings. All terminals provided for termination of external circuits shall be identified by inscribing circuit designations acceptable to the Engineer on the terminal block marking strips with black paint. All other wiring terminations shall be identified either by legible markings on the device terminals or by printing on wire sleeves. Terminal and conductor identification shall be by a permanent method unaffected by heat, solvents, or steam, and not easily dislodged, preferably by means of printing on plastic sleeves. Identification of conductors shall be by the method described hereafter or acceptable equal. Conductor identification shall be with slip-on sleeves not less than 1/2 inch long. The sleeves shall be as manufactured by the Dura Mark Company, Port Washington, New York. Conductor identification shall be printed on the sleeve with a Thomas and Betts Company Catalog No. WT163M-1 marking pen, Panduit Corp. Part No. PX marking pen, or acceptable equal. After inscription of the conductor identification, the marking sleeve shall be coated with clear acrylic spray coating, Krylon No. 1303 as manufactured by Borden, Inc., or acceptable equal. Adhesive labels are not acceptable.

The arrangement of connections on terminal blocks shall be acceptable to the Engineer.

All connections requiring disconnect plug type devices shall be provided with factory terminated conductors on both sides of each plug. Sufficient multiconductor cable shall be provided to connect the plugs into junction boxes containing terminal blocks for the Owner's external connections. All conductors on the disconnect portion of plugs shall be in a common jacket.

All temporary wiring installed in the factory for equipment testing shall be removed prior to shipment of the equipment.

1B.32 CABLE TERMINATION PROVISIONS. Electrical conductors supplying the equipment provided under these specifications will be sized for installation in covered electrical cable tray to a 4 inch loading depth and with 40 per cent random fill. Sizing will be in accordance with the requirements of the following standards:

IPCEA - NEMA Standard of Ampacities of Cables in Trays, 1972

AIEE - IPCEA Power Cable Ampacities Handbook, 1962 (IPCEA P-46-426 & IEEE Publication No. S-135)

IPCEA Short Circuit Characteristics of Insulated Cable, Publication P-32-382, 1969

Capacity of conduit entrances, terminal enclosures, and conductor terminals shall be as required to accommodate either copper or aluminum conductors which are sized as described in the previous paragraph.

ITEM
SPEC
PROJECT

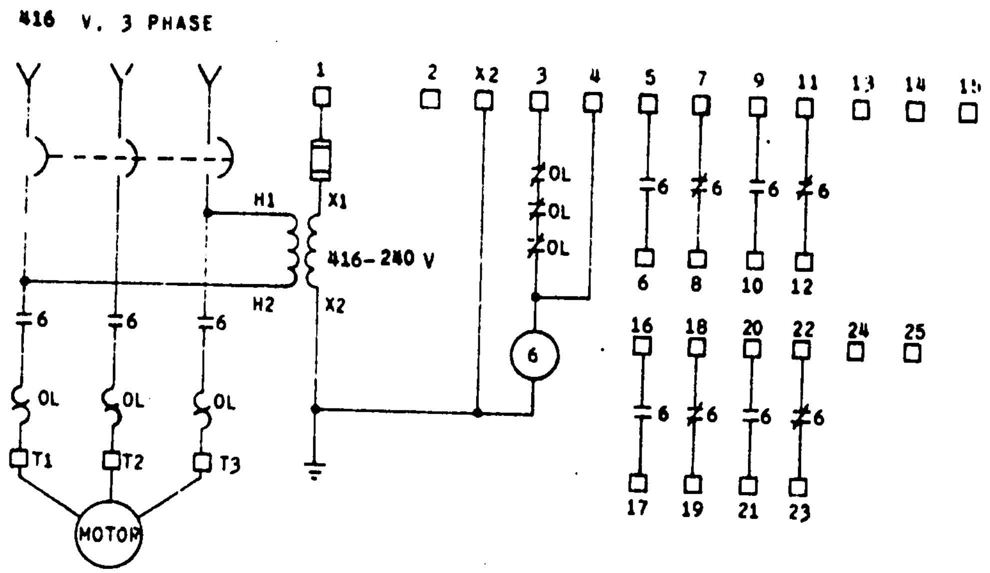

WIRING DIAGRAM COMBINATION FULL VOLTAGE NON-REVERSING STARTER

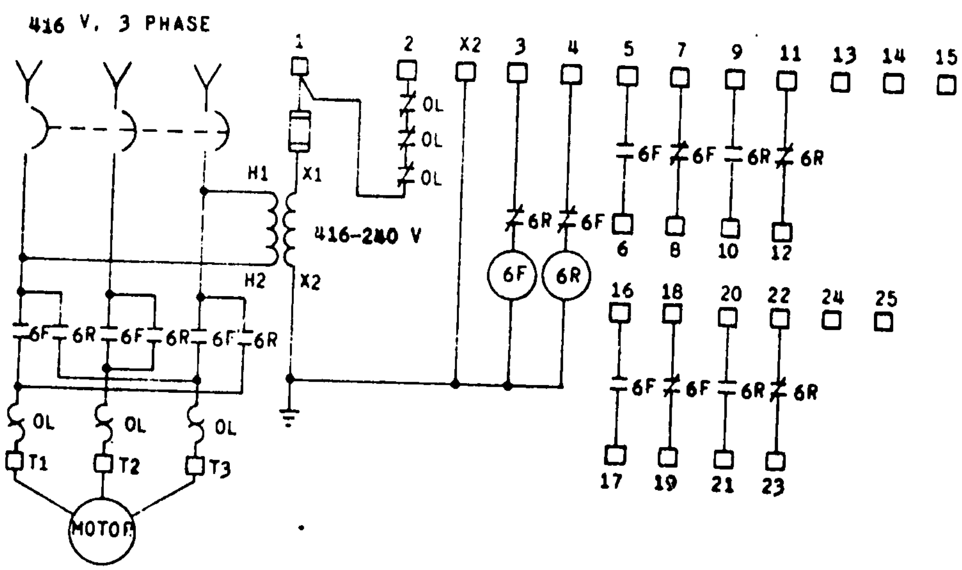

WIRING DIAGRAM COMBINATION FULL VOLTAGE REVERSING STARTER

BLACK & VEATCH INTERNATIONAL
CONSULTING ENGINEERS
KANSAS CITY, MO.

MOTOR CONTROL CENTER
SPECIFICATION AND DATA SHEET

1B-16A

ITEM _____
SPEC _____
PROJECT _____

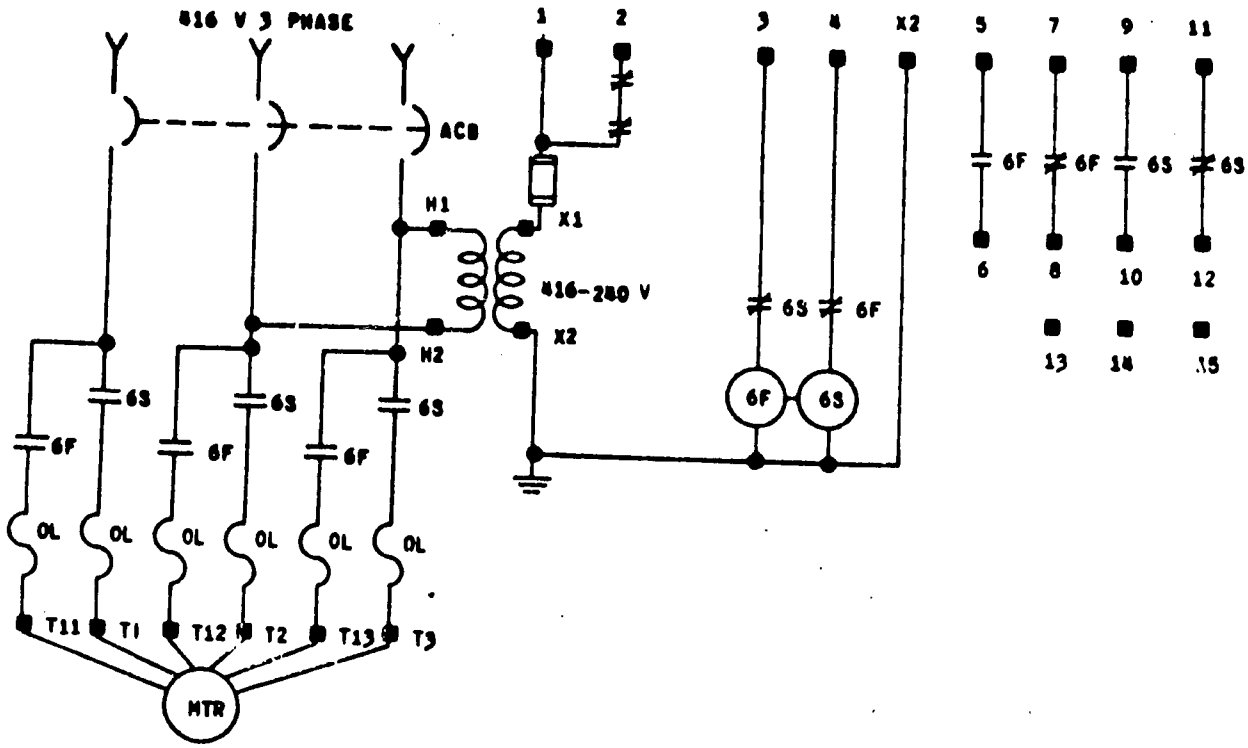

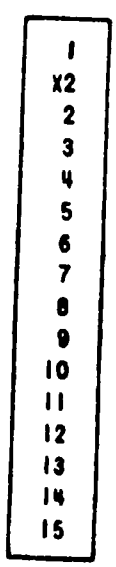

LEGEND

MTR - MOTOR
6S - SLOW CONTACTOR
6F - FAST CONTACTOR
OL - OVERLOAD
ACB - AIR CIRCUIT BREAKER
▭ - FUSE

WIRING DIAGRAM COMBINATION FULL VOLTAGE, 2 SPEED, 2 WINDING STARTER.

BLACK & VEATCH INTERNATIONAL
CONSULTING ENGINEERS
KANSAS CITY, MO.

MOTOR CONTROL CENTER
SPECIFICATION AND DATA SHEET

1B-16B

YELLOW

PROJECT AID
BARANG PEMERINTAH
PROYEK PELITA

RED

BLUE

PERUSAHAAN UMUM LISTRIK NEGARA
PROYEK PLTU SEMARANG
JL. SILIWANGI 379 SEMARANG

L/C NO.:
I.R. NO.:

SEMARANG
INDONESIA

CASE NO.:

GROSS WEIGHT:
NET WEIGHT:
DIMENSION:

NOTES:
1. THE ABOVE MARKINGS ARE TO BE PLACED ON TWO OPPOSITE STANDING SIDES.
2. TAGS ARE TO BE MARKED AS SHOWN ABOVE EXCEPT THAT CORNER MARKINGS ARE NOT REQUIRED.
3. TAGS ARE TO BE PROTECTED FROM FADING.
4. AID "CLASPED HANDS" EMBLEM SHALL ALSO BE APPLIED TO ALL SHIPPING CONTAINERS.

P-GN-009-B

BLACK & VEATCH INTERNATIONAL CONSULTING ENGINEERS KANSAS CITY MISSOURI USA	SHIPPING CONTAINER IDENTIFICATION	PROJECT 6104
	PERUSAHAAN UMUM LISTRIK NEGARA SEMARANG STEAM POWER PLANT UNITS 1&2	PAGE 1B-17

Section 1C - ENGINEERING DATA

1C.1 GENERAL. This section covers engineering data, instruction manuals, and manufacturer's drawings which the Contractor shall submit to the Engineer for design information or review. As stipulated in Section 1A, compliance with the specified schedule for drawing and data submittal is essential to the scheduled progress and completion of Units 1 and 2 and is of the essence of this Contract.

1C.2 CORRESPONDENCE. Correspondence forwarding drawings, instruction manuals, and other engineering data shall be addressed as follows:

Black & Veatch International
P.O. Box 8405
Kansas City, Missouri 64114

Attention: Mr. L. J. Svoboda

1C.3 PERFORMANCE CURVES. Within 30 days after award of contract, 12 copies of the following performance curves shall be submitted:

* ~~Condenser performance curves for various steam loadings and circulating water temperatures~~

~~Vacuum correction curves for varying cleanliness factors~~

~~Condenser performance curves with one circulating water pump operating~~

~~Air ejector performance curves~~

Speed torque, speed current, and safe time current curves
* for ~~condensate pump and~~ circulating water pump motors

1C.4 MOTOR INFORMATION. A sample Motor Information Sheet is bound at the end of Subsection 1D1. The successful bidder will receive one copy of this form for each motor for which a Motor Specification and Data Sheet has been included in these specifications. These sheets shall be completed and copies submitted as specified in this Section 1C. The number of copies required shall be the same as for other manufacturer's drawings.

1C.5 DRAWINGS. Drawings shall be submitted for the Engineer's review in accordance with the following procedures and schedules.

1C.5.1 Procedures. Drawings shall be in sufficient detail to show the kind, size, arrangement, weights of each component, breakdown for shipment, and operation of component materials and devices; the external connections, anchorages and supports required; the dimensions needed for installation and correlation with other materials and equipment; and the information specifically requested in this section under "Schedules".

*Not included in Contract

Six copies of each drawing, preliminary or certified, shall be submitted to the Engineer. Each drawing submitted, shall be clearly marked with the name of the project, the specification number, the Engineer's assigned number, the Contractor's name, and references to applicable specification paragraphs. When catalog pages are submitted, the applicable items shall be indicated.

"Preliminary" drawings shall be reasonably complete and suitable for the Engineer's use in establishing basic plant arrangement and design requirements. Preliminary drawings will not be reviewed by the Engineer; however, the Engineer will refer to the Contractor conflicts or discrepancies which he may discover in his reference to the drawings.

"Certified" drawings will be reviewed by the Engineer and returned to the Contractor marked RETURNED FOR CORRECTION, EXCEPTIONS NOTED, NO EXCEPTIONS NOTED, or RECEIVED FOR DISTRIBUTION.

When the drawings are returned marked NO EXCEPTIONS NOTED or RECEIVED FOR DISTRIBUTION, additional copies shall be submitted to the Engineer for distribution. The number of additional copies will be determined by the Engineer, but will not exceed six.

When the drawings are returned marked EXCEPTIONS NOTED the changes shall be made as noted thereon and corrected copies shall be submitted to the Engineer for final review and distribution. The number of corrected copies will be determined by the Engineer, but will not exceed twelve.

When the drawings and data are returned marked RETURNED FOR CORRECTION the corrections shall be made as noted thereon and as instructed by the Engineer and six corrected copies shall be resubmitted for review.

The Engineer's review of drawings and data will cover only general conformity to the specifications and the external connections and dimensions which affect the plant arrangement. The Engineer's review of drawings returned marked NO EXCEPTIONS NOTED, or EXCEPTIONS NOTED does not indicate a thorough review of all dimensions, quantities, and details of the material, equipment, device, or item shown and does not relieve the Contractor from any responsibility for errors or deviations from the specification requirements.

No work shall be performed in connection with the fabrication or manufacture of equipment and materials until the drawings and data therefor have been reviewed by the Engineer. Work may proceed on equipment and materials when the drawings and data therefor have been returned marked NO EXCEPTIONS NOTED or RECEIVED FOR DISTRIBUTION and when drawings have been marked EXCEPTIONS NOTED provided the work is performed in accordance with the Engineer's notations.

All drawings, after final processing by the Engineer, shall become a part of the specification documents and the work shown or described thereby shall be performed in conformity therewith unless otherwise required by the Owner or the Engineer.

When changes in the wiring and equipment are made in the field to correct shop construction errors or to adapt the requirements to the Owner's requirements, the Contractor shall prepare and submit 12 copies of record drawings to the Engineer to show the equipment as finally installed.

Upon receipt from the Engineer of drawings marked NO EXCEPTIONS NOTED or RECEIVED FOR DISTRIBUTION, the Contractor shall transmit two full size reproducible prints of each drawing to the Engineer. The reproducible shall be right reading, on 0.003 inch thick Du Pont wash-off mylar and shall not exceed 34 inches by 44 inches in size. Diazo sepias, black line mylar, or auto-positive reproducibles will not be acceptable.

Three microfilm aperture cards of each final drawing shall be submitted. Microfilming and aperture card mounting shall be in accordance with the applicable requirements of Military Specifications MIL-M-9868, and MIL-M-38761.

1C.5.2 Schedules. Drawings shall be submitted in accordance with the following schedules. The number of days specified shall be from and after the date of contract award.

a. For preliminary issue within 30 days and certified issue within 75 days:

* ~~Surface condenser complete outline~~

~~Condensate pump and motor outline~~

Circulating water pump and motor outline

* ~~Air ejector outline~~

~~Traveling screen outline~~

b. For preliminary issue within 45 days and certified issue within 90 days:

* ~~Condenser connection view~~

~~Expansion joint outline~~

Wiring diagrams

Completed Motor Information Sheets

*Not included in Contract

c. For preliminary issue within 60 days and certified issue within 120 days:

Miscellaneous trim drawings

d. For preliminary issue within 90 days and certified issue within 180 days:

Erection drawings

1C.5.3 Wiring Diagrams. Connection and interconnection wiring diagrams furnished by the Contractor shall meet the requirements of ANSI Y 14.15a-1971, Section 15-11, Article 15-11.3.2.1, BRANCHED HIGHWAY. The wiring drawings shall be drawn with all devices shown in their relative physical locations. Wiring diagrams shall be rear view. Each device connection shall have near each termination, shown in separate breaks, the opposite end destination.

Wiring diagrams shall be prepared on sheets approximately 34 inches by 44 inches. Where interconnecting wiring from different items of equipment or sectional wiring diagrams of the same item of equipment appear on different wiring diagram sheets, all interconnections shall be clearly identified. Where sectional wiring diagrams are required for a single item of equipment such as a relay panel or control panel, that section of the panel which is represented by each individual wiring diagram sheet shall be keyed on that sheet in a manner acceptable to the Engineer.

Information shown on the Contractor's drawings shall include wiring of the individual panel items as they actually will appear in the panel, contact arrangements of switches, and internal wiring of relays and instruments.

Elementary diagrams shall be cross-referenced to terminal markings on the connection and interconnection diagrams, but need not show complete details of circuits external to the panels. Each item of panel mounted equipment shown on the diagrams shall be identified by item number and name.

Sufficient space shall be left on the Owner's side of outgoing terminal blocks for adding cable color codes and circuit numbers.

1C.6 INSTRUCTION MANUALS. The Contractor shall furnish 10 complete and final copies of instruction manuals for the equipment not later than 30 days prior to the shipment of the equipment.

9 final copies of the instruction manuals shall be sent to the Owner and 1 final copy shall be sent to the Engineer.

Manuals shall be assembled and bound in Buchan Type ORL (old style) binders covered with pyroxylin impregnated black buckram covers, manufactured by Buchan Loose Leaf Records Co., Clifton Heights, Pennsylvania. Binders shall not be greater than 3-1/2 inches thick and shall be adjustable to permit secure compact binding. Each binder shall be stamped with the proper identification as indicated on Drawing A6104-030273 bound at the end of this section. Binders shall be black with gold lettering.

A complete proofed copy of the proposed manual, including cover lettering, shall be submitted to the Engineer for acceptance. After acceptance, the remaining copies shall be submitted as directed by the Engineer.

The manuals shall include the following:

Table of Contents and index tabs

Specifications, test data, and curves

Description of the equipment

Operating instructions

Instructions in methods of receiving, inspection, storage, and handling

Complete installation and maintenance instructions

Assembly drawings

Parts lists

Schedule of required lubricants

Nameplate information and shop order numbers for each item of equipment and component part thereof

List of recommended spare parts and prices

List of maintenance tools furnished with the equipment

NAME
OF
EQUIPMENT

PERUSAHAAN
UMUM LISTRIK
NEGARA

SEMARANG
STEAM POWER
PLANT

UNITS
1 & 2

VOLUME
NUMBER*

(Backbone)

PERUSAHAAN UMUM LISTRIK NEGARA
AGENCY OF MINISTRY OF PUBLIC WORKS AND POWER
GOVERNMENT OF REPUBLIC OF INDONESIA
JAKARTA, INDONESIA

SEMARANG STEAM POWER PLANT
100 MW (2 x 50 MW) UNITS 1 & 2

INSTRUCTION BOOK

FOR

NAME OF EQUIPMENT

VOLUME NUMBER*

MANUFACTURER'S NAME
MANUFACTURER'S ADDRESS

AID LOAN 497-H-024

BLACK & VEATCH INTERNATIONAL
CONSULTING ENGINEERS
KANSAS CITY, MISSOURI, U.S.A.

(Cover)

NOTE:

Cover Type: Large - 36 point Alternate Gothic #2
Medium - 16 point Futura Medium
Small - 12 point Futura Medium

Backbone Type: All same point size of Alternate Gothic #2 (Either 10 point, 12 point or 14 point) as backbone width allows.

* Stamp cover with volume number if instructions are contained in more than one volume

TYPICAL EQUIPMENT INSTRUCTION BOOK COVER

BLACK & VEATCH INTERNATIONAL CONSULTING ENGINEERS KANSAS CITY, MO., U.S.A.	PERUSAHAAN UMUM LISTRIK NEGARA SEMARANG STEAM POWER PLANT UNITS 1 & 2	A6104-030273

Section 1D - ELECTRIC MOTORS

1D.1 GENERAL. These motor specifications are applicable to all electric motors required for the operation of the equipment furnished. Motor Specification and Data Sheets for the motors required have been included in the equipment articles as required. Any motors not specifically covered but still required for operation of the equipment shall be furnished. The Contractor shall list and include as part of the Proposal the additional motors being furnished and they shall be in accordance with these specifications.

Subsection 1D1 - INTEGRAL HORSEPOWER AC MOTORS

1D1.1 GENERAL. These motor specifications are applicable to all integral horsepower ac electric motors required for the operation of the equipment furnished. Motor Specification and Data Sheets for the motors required have been included in the equipment articles as required.

The requirements of the individual Motor Specification and Data Sheets shall govern where conflicts occur.

1D1.2 CODES AND STANDARDS. All motors shall be designed and fabricated to conform to the requirements of applicable ANSI, IEEE, and NEMA standards.

1D1.3 RATING. Unless otherwise stated in the technical sections or on the Motor Specification and Data Sheets, all integral horsepower motors shall be designed for operation on 380 volts, 3 phase, 50 hertz or 4000 volts, 3 phase, 50 hertz.

Motors shall be designed for full voltage starting, frequent starting where required, and shall be suitable for continuous duty in the specified ambient. Intermittent duty motors may be furnished where recognized and defined as standard by the equipment standards and codes. Motors shall be sized for the altitude at which the equipment will be installed.

The electric motor brake horsepower required to drive the furnished equipment at the maximum design point of the equipment shall not exceed the motor rating at 1.0 service factor. Motors shall be sized so that, under maximum load conditions imposed by the driven equipment, the motor has an additional continuous rated overload capacity of not less than 15 per cent. Motors with a service factor of 1.15 may be applied up to full nameplate horsepower rating. Motors with a service factor of 1.00 may be applied up to 87 per cent of full nameplate rating.

1D1.4 NAMEPLATE DATA. All motor nameplate data shall conform to NEMA MG 1 requirements. The following additional nameplate data shall be included:

Manufacturer's identification number
Frame size number
Insulation system class designation
Service factor
Locked-rotor kVA code letter
Starting limitations, if any
Direction of rotation and voltage sequence as specified later

1D1.5 TERMINAL MARKINGS. Terminal markings for motors shall be in accordance with Part 2 of NEMA MG 1 standards.

1D1.6 DESIGN AND CONSTRUCTION. Design and construction of each motor shall be coordinated with the driven equipment requirements and as designated on the Motor Specification and Data Sheets.

1D1.6.1 Service Factor. For all motors 200 horsepower or less furnished with a service factor greater than 1.0, the service factor shall be in accordance with NEMA MG 1-12.47.

For all motors rated above 200 horsepower furnished with a service factor greater than 1.0, the motor nameplate shall show the horsepower rating at 1.0 service factor, and the service factor. The motor shall be designed to provide a continuous horsepower capacity equal to the rated horsepower at 1.0 service factor multiplied by the specified motor service factor without exceeding the total limiting temperature rise stated in these specifications for the insulation system and enclosure specified.

1D1.6.2 Enclosures. All motors shall be self-cooled.

Motors for normal indoor service shall have dripproof enclosures. Motors for unusual indoor service shall be totally enclosed and of the correct type enclosure for the particular service as specified in NEMA MG 1-1.26.

Motors for normal outdoor service shall be NEMA waterproof totally enclosed or have a NEMA weather-protected Type I enclosure. NEMA weather-protected Type I motors shall be complete with screen guards over all openings. Screen guards shall be fabricated of corrosion resistant metal.

Motors for outdoor service shall have all exposed metal surfaces protected, where practical, with a corrosion resistant polyester paint or coating. Exposed unpainted and uncoated metal surfaces shall be of a corrosion resistant material.

All self-ventilated open type motors, including those with dripproof, splashproof, and weather-protected enclosures, and the fan hoods of totally enclosed fan cooled motors shall meet NEMA MG 1 requirements for a fully guarded machine.

Totally enclosed motors shall be furnished with drain plugs, and with cast iron frames, bearing brackets, and terminal housings. Fan cooled motors shall have fans fabricated of corrosion resistant metal and cast iron fan covers. Drain plugs shall be Crouse-Hinds Type ECD "Universal" combination water drain-breather type or acceptable equal. Rotating shaft seal is preferred on shaft extension end of motor.

All motor nameplates and attachment pins shall be corrosion resistant material.

1D1.6.3 Insulation. All insulated windings shall have nonhygroscopic Class B, sealed insulation system rated for temperature rise and ambient temperature in accordance with NEMA MG 1 standards for the insulation class specified except for motors having a service factor greater than 1.0. The observable temperature rise measured by resistance for motors having a service factor greater than 1.0 shall not exceed 80 C when operating at service factor load.

When ambient temperatures greater than 40 C are specified, the observable temperature rise shall be reduced in accordance with NEMA MG 1 standards.

For the sealed insulation system specified, two additional dips and bakes of epoxy varnish or vacuum-pressure impregnation shall be included to provide a premium insulation for random windings. Sealed insulation for formed coil windings shall be in accordance with the requirements of NEMA MG 1 standards.

The insulation resistance corrected to 40 C shall be not less than motor rated kV+1 megohms for all windings.

An insulation resistance-time curve corrected to 40 C for determining the polarization index for windings of motors rated above 600 volts with formed-coil stators shall be taken immediately prior to making the final high potential ground test. Each stator phase shall be tested separately to ground with other phases grounded. Motors shall be tested at 5000 volts dc. The ambient temperature, winding temperature, and relative humidity values shall be included with the recorded data. The polarization index shall not be less than 3.0.

1D1.6.4 Space Heaters. All motors furnished in NEMA 180 frame series or larger shall have 240 volt, single phase, 50 hertz space heaters. Space heaters shall be provided inside the motor enclosure in a location suitable for easy removal and replacement. Space heaters shall be of the capacity required to maintain the motor internal temperature above the dew point when the motor is idle and shall be isolated by a heat insulation barrier or located so as not to cause heat damage to adjacent painted surfaces. Space heater leads shall be 600 volt stranded copper cable and shall include terminal connectors.

1D1.6.5 Terminal Housings. A single terminal housing for motor power leads and accessory leads shall be furnished on all motors rated 600 volts and less. A terminal housing for power leads and a separate accessory terminal housing for accessory leads shall be furnished on motors rated above 600 volts. When embedded temperature detectors are included in the specified accessories, an additional terminal housing shall be provided for detector leads. Leads insulated for different voltage classes shall not occupy or terminate in the same housing under any conditions.

Terminal housings shall be cast iron, pressed steel, or fabricated steel. Housing shall be diagonally split with a gasket between the diagonally split halves of the housing. Each housing shall have a threaded opening to provide a watertight rigid connection with the conduit and shall be designed for rotation in 90 degree increments, or provisions included otherwise, to receive conduit from any of four directions. A nonconducting motor lead positioner and gasket shall be furnished between the housing and the motor frame. All motor leads located in the housing shall have terminals and shall be permanently numbered for ease of identification.

Separate accessory terminal housings provided for current transformer leads, temperature detector leads, space heater leads, alarm device leads, speed switch leads, and other similar accessory equipment leads shall be complete with screw type terminal blocks General Electric Type EB-5 or acceptable equal for termination of such leads. Terminal blocks for current transformer leads shall be shorting type. Each terminal in the blocks shall be identified and marked for its respective leads. Accessory terminal housings shall be accessible from outside the motor.

Terminal housings shall be designed and constructed to permit motor removal after installation without disconnecting motor power and accessory lead raceways from the terminal housings.

All motor power lead terminal housings shall be at least one size larger than normally furnished as standard and, for motors rated above 600 volts, shall be arranged to permit the installation of stress cones within the housing. Surge capacitors and lightning arresters, when specified, shall be mounted at the motor terminals inside an oversized housing.

Location and dimensions of terminal housings for motors rated above 600 volts shall be subject to acceptance by the Engineer.

1D1.6.6 Leads. All leads including motor power leads, current transformer leads, space heater leads, and thermal device leads shall be wired into their respective terminal housing. All motor leads and their terminals shall be marked in accordance with the requirements of NEMA MG 1, Part 2.

All motors rated 100 horsepower and larger, and all motors furnished with unidirectional blowers shall have the direction of rotation marked by an arrow mounted visibly on the stator frame near the terminal housing or on the nameplate and the leads marked for phase sequence T1, T2, T3, to correspond to the direction of rotation and supply voltage sequence.

Space heater leads for motors rated 600 volts or less shall be wired into the motor power lead terminal housing, and space heater leads for motors rated over 600 volts shall be wired to the separate accessory terminal housing.

Dual voltage rated motor leads shall be easily connected or reconnected in the terminal housing for operating voltage. Permanent instructions for making these connections shall be furnished inside the terminal housing or on the motor frame or nameplate.

Strap type leads shall have bolt holes arranged in accordance with NEMA SG 1.

1D1.6.7 Terminals. All cable type leads shall be provided with Burndy Type YA (long barrel) or equivalent compression type connectors.

1D1.6.8 Ground Connectors. Motors shall be furnished with a grounding connector attached to the motor frame inside the motor power lead terminal housing. The grounding connector may be a lug or terminal or other acceptable grounding connector. The ground cable size will be given later.

Motors rated higher than 600 volts shall have an additional grounding connector permanently attached to the motor frame on the same side of the motor as the motor power lead terminal housing. The grounding connector may be a corrosion resistant metal pad welded or brazed to motor frame with a threaded hole at its center, a terminal connector attached to the motor frame, or other acceptable motor frame grounding method. The grounding point shall be on or near the end of the motor opposite the output shaft of horizontal motors and on or near the base of vertical motors.

1D1.6.9 Bearings. Motors furnished in NEMA 360 frame series and larger shall be provided with oil lubricated sleeve bearings. Motors furnished in smaller frame sizes shall be provided with grease lubricated, rolling element, self-lubricated, regreaseable type bearings.

Grease or oil lubricated rolling element thrust and radial bearings shall be designed and fabricated in accordance with AFBMA standards to have a minimum L-10 life rating of not less than 130,000 hours under the load, speed, and thrust requirements for direct coupled service and not less than 42,500 hours for belt or chain connected service. Grease lubricated radial bearings shall be double-shielded.

Sleeve bearings shall be oil-ring lubricated type with mountings provided with oil level sight glasses marked for required oil level at motor running and motor standstill. The oil ring shall be one-piece construction; split type construction will not be acceptable. Stationary labyrinth seals shall be bronze material.

Sleeve bearings, end bells, and bearing housings for horizontal motors shall be split type when available for the frame and enclosure specified. Air gap measurement holes or other acceptable means shall be provided in each motor end enclosure for checking air gap of sleeve bearing motors.

Sleeve bearings on horizontal motors shall be designed and located centrally with respect to running magnetic center to prevent the rotor axial thrust from being continuously applied against either end of the bearing. The motors shall be capable of withstanding without damage the axial thrusts that are developed when the motor is energized.

Insulation shall be provided to prevent circulation of shaft current on sleeve and plate type bearings, on oil piping connections for external bearing lubrication systems and, when required, on rolling element bearings.

Thrust bearings for vertical motors shall be capable of operating for extended periods of time at any of the thrust loadings imposed by the specific piece of driven equipment during starting and normal operation without damage to the bearing, the motor frame, or other motor parts.

Stacked rolling element bearings will not be acceptable except for vertical thrust bearings in frame sizes up through NEMA 360 Series open type enclosures and up through NEMA 680 Series totally enclosed type enclosures. Where stacked bearings are furnished, matched pair, ABEC Grade 3 precision tolerance bearings with flush ground sides shall be provided. Bearing seats on the shaft and the bearing in housing shall have accuracy equal to that of the bearing.

The type thrust bearing specified on the Motor Specification and Data Sheets shall be used for Base Bid Proposals. Alternate bids will be considered for other type thrust bearings provided that the Proposal contains the following information: normal downthrust capacity of bearing to be furnished, type of thrust bearing, number of bearings if angular contact type, thrust bearing losses, type of lubrication, quantity of cooling water if required, and AFBMA minimum L-10 life rating in hours for rolling element bearing under the load, speed, and foregoing normal thrust conditions.

All mountings for bearings shall be designed to prevent the entrance of lubricant into the motor enclosure or dirt into the bearings, and shall be provided with pipes, drain plugs, and fittings arranged for safe, easy relubrication from the outside of the motor while the motor is in service.

Bearing lubrication shall be furnished by an internal lubrication system, unless specified otherwise on the Motor Specification and Data Sheets. When an external lubrication system is required it shall be furnished complete by the Contractor, including all required connections. Required connections shall be furnished for forced or recirculating lube oil as specified on the Motor Specification and Data Sheets.

The Contractor shall furnish all lubrication information required to assure proper equipment startup and subsequent bearing maintenance. Motors furnished with rolling element bearings shall have the AFBMA bearing identification number shown on a nameplate attached to the motor frame.

1D1.6.10 Rotors. All induction motors shall have squirrel-cage rotors. Rotors shall be adequately sized to avoid overheating during acceleration of the motor and driven equipment. Rotors not of integral die cast construction shall be furnished with copper or copper alloy cage material.

All motor rotating components shall be dynamically balanced after mounting on the shaft. Motor vibration shall not exceed the peak-to-peak amplitude values given in NEMA MG 1 standards when measured in accordance with those standards.

For motors rated above 500 horsepower, the minimum clearance space required for removal of the rotor shall be indicated both in the Proposal and on the dimensional outline drawing.

1D1.6.11 Shafts. Where shipment permits, motor output shafts shall be complete with motor half coupling mounted, connected to the driven equipment, and adjusted ready for operation. Where motor size prevents shipment with motor connected to driven equipment, the motor half coupling shall be factory mounted for field connection to the driven equipment.

The output shaft of motors furnished with sleeve bearings shall be circumscribed with permanent marks indicating the motor magnetic center and end float limits when level and running at rated speed. A permanent, identified reference point shall be indicated or attached to the bearing housing or shaft seal. The markings shall be easily identifiable for use during motor installation.

Rotor end float and coupling end play for horizontal sleeve bearing motors shall be in accordance with NEMA MG 1-14.37 and -20.81. The minimum rotor end float in fractions of an inch and the maximum diameter in inches of the lathe center in the shaft extension shall be shown on the motor dimensional outline drawing.

1D1.6.12 Torque Characteristics. The torque characteristics of all induction motors at 90 per cent rated voltage or at the starting conditions shown on the Motor Specification and Data Sheets shall be as required to accelerate to full speed the inertia loads of the motor and driven equipment without damage to the motor or the equipment. Locked-rotor current at rated voltage of all induction motors shall be the minimum within the standard design limits used. All motors shall be designed and fabricated to withstand the forces of across-the-line starting at 110 per cent rated voltage.

Unless specified otherwise, motors rated 200 horsepower and less shall have torques and locked-rotor current in accordance with NEMA MG 1, Part 12 for the specified design classification. For motors rated above 200 horsepower, the torques in per cent full-load torque at rated voltage and frequency

shall not be less than 200 breakdown, 85 pull-up, and 100 starting. Locked-rotor kVA/hp at rated voltage and frequency shall not exceed 5.77 for motors rated above 200 through 500 horsepower and 5.59 for motors rated above 500 horsepower.

1D1.6.13 Critical Speeds. Motors shall be designed to keep torsional and rotational natural frequencies of vibration outside of the motor rated speed ranges to avoid resonant vibration over the operating speed range of the equipment-motor unit.

1D1.6.14 Externally Originating Vibration. Motors shall be capable of withstanding continuously, without damage, externally originating vibration transmitted through the motor shaft or the motor foundation equal in magnitude to the maximum internal motor vibration which is permitted by NEMA MG 1 standards for the motor alone.

1D1.6.15 Temperature Detectors. Bearing and winding temperature detectors shall be furnished and installed complete in accordance with the applicable requirements of ANSI C96.1 and IEEE 119 standards. Detectors shall be compatible with instrumentation requirements.

Resistance type temperature detectors shall conform to Edison-Omniguard Characteristic Curve No. 7, 120 ohms at 0 degree C.

Thermocouple type temperature detectors shall be ungrounded dual element, ISA Type K chromel-alumel.

1D1.6.16 Bearing Temperature Detectors. Bearing detectors, complete with detector head and holder assemblies as required, shall be furnished on all motors with sleeve and Kingsbury type bearings. Detectors shall be furnished on motors with antifriction bearings when specified on the Motor Specification and Data Sheets. The detector temperature sensitive tip shall be hermetically sealed and held in intimate contact with the outside diameter of the bearing babbitt not over 1/16 inch from shaft surface of bearing babbitt on sleeve bearings and on the outer race or in close proximity to the bearing metal for antifriction bearings.

Thermocouple type detectors for bearings shall be insulated with magnesium oxide packed in a stainless steel protective sheath.

1D1.6.17 Winding Temperature Detectors. Winding temperature detectors shall be furnished, installed and wired complete when specified on the Motor Specification and Data Sheets. When embedded detectors are specified, a detector lead terminal housing shall be included mounted on the motor frame.

Detectors embedded between coils in the stator slots shall be evenly spaced around the stator and centrally located axially in the slot. Detectors embedded in the coil end-turns shall be evenly spaced around the stator and located out of the ventilating air stream.

Thermocouple type detectors shall be embedded in the coil end-turns of random-wound stators and embedded between the coils in the stator slots of form-wound stators. The number of thermocouples shall be as specified on the Motor Specification and Data Sheets. Thermocouple wire shall be solid 18 AWG or larger.

Temperature detector and detector lead insulation class shall be the same as the stator coil insulation class. Leads for detectors furnished on motors rated above 600 volts shall be provided with a protective brass interlocked spiral armor and terminated on a terminal block.

All temperature detectors shall be tested at 1500 volts to ground and checked for accuracy just before the final winding dielectric tests are taken. Accuracy shall be checked by measurement of the detector resistance or by checking the temperature reading obtained with a temperature detector meter when the windings are at room temperature.

1D1.6.18 Motor Differential Protection. All 3 phase motors rated over 600 volts which are 1500 horsepower and larger shall be furnished with three relaying accuracy current transformers. Current transformers shall be provided with stranded cable type leads and shall be removable without disassembly of the motor. Current transformer ratios will be determined later by the Engineer. Motors shall be furnished with six leads and with a connection plate showing lead terminal connection for operating voltage mounted on the inside surface of the terminal housing cover. The type of connection, wye or delta, shall be stated in the Proposal Data.

1D1.6.19 Noise Level. The average no-load overall sound pressure level re 0.0002 dynes/cm^2 shall not exceed 90 dBA measured 3 feet from major machine surfaces for motors furnished in NEMA 440 series frame sizes and smaller. The sound level for motors furnished in frame sizes larger than NEMA 440 series shall not exceed 90 dBA measured 5 feet from major machine surfaces. Sound pressure levels shall be determined from 5-position readings.

Octave band sound pressure level values re 0.0002 dynes/cm^2 dBC shall be included on each Motor Information Sheet.

In addition to conformance with the specified noise level, single frequency air-borne windage noise shall not exceed levels which can produce damage to the human ear.

Noise level measurements shall be in accordance with the requirements of IEEE No. 85 Test Procedures.

Sound reduction baffles, mufflers, and materials shall be contained within the motor enclosure except external fan mufflers may be furnished for totally enclosed fan cooled motors.

1D1.7 FACTORY TESTS AND INSPECTION. Each motor shall be tested and inspected at the manufacturer's factory to determine that it is free from electrical or mechanical defects and to provide assurance that it meets the requirements of these specifications. Test procedures shall be in accordance with IEEE No. 112A Test Procedure for Polyphase Induction Motors and Generators.

1D1.7.1 Routine Tests and Inspection. The standard routine tests and inspections shall be made on each motor. These shall include the following:

No-load running current at normal voltage
Locked-rotor current at fractional voltage
Measurement of winding resistance
Dielectric test
Inspection of bearings and bearing lubrication system

Five copies of reports of the routine test for each motor shall be included with the dimensional outline drawings submitted to the Engineer. For motors rated above 100 horsepower, the test reports shall be submitted to the Engineer prior to shipment of the motor from the manufacturer's factory.

In each case where the motor design furnished is an electrical duplicate of one which has been manufactured and completely tested to determine performance characteristics, five copies of reports covering the results of the performance tests for the design, including a speed-torque-current curve, shall be provided in addition to the routine test specified. Electrical duplicate design includes those designs which are considered a "ratio-of-voltage" to the specified voltage.

1D1.7.2 Additional Tests for Large Motors. For motors rated above 500 horsepower, test report data shall include the following in addition to other requirements of these specifications:

Final value of motor axial and radial vibration
Length of time and final temperature rise of bearing test
A statement that bearings have been inspected and approved for shipment
Insulation resistance-time curve and polarization index for motors with formed-coil stators
Final value of motor noise level including statement that there is no objectionable discrete frequency windage noise

1D1.8 MOTOR SPECIFICATION AND DATA SHEETS. The Motor Specification and Data Sheets specify the major construction requirements for each motor. After award of contract, in accordance with the schedule specified in Section 1C, the Contractor shall complete and submit copies of the Motor Information Sheets for each motor furnished with all motor data filled in.

1D1.9 MANUFACTURERS. Motors shall be as manufactured by one or more of the following:

Allis-Chalmers
Century
Electric Machinery
Electric Products
General Electric
Ideal Electric
Reliance
U.S. Motors
Westinghouse

MOTOR _____

ITEM _____
SPEC M-12A
PROJECT 6104

MOTOR DATA TO BE SUBMITTED BY SUCCESSFUL BIDDER AS SPECIFIED

INFORMATION REQUIRED FOR ALL MOTORS.

HP _____
FULL LOAD SPEED _____ RPM
FULL LOAD CURRENT _____ AMPS
LOCKED ROTOR CURRENT _____ AMPS
TOTAL MOTOR WT _____ LBS
SPACE HEATERS (IF FURNISHED)
NUMBER OF UNITS _____
UNIT RATING, WATTS _____

TEMP. RISE _____ C BY RESISTANCE
AT SERVICE FACTOR OF 1.0 _____ ; 1.15 _____ .

SOUND LEVELS:
SOUND POWER LEVEL
RE 10-12 WATTS _____ dBA
FREE FIELD

INFORMATION REQUIRED FOR ALL MOTORS 200 HP AND LESS

SOUND LEVELS:
OVERALL MEAN SOUND PRESSURE LEVEL
RE 0.0002 DYNES/CM^2 REFERENCE DISTANCE OF 3 FEET _____ dBA FREE FIELD

INFORMATION REQUIRED FOR MOTORS LARGER THAN 200 HP

EFFICIENCY, PER CENT
LOAD: 1/2 ____ 3/4 ____ 4/4 ____
POWER FACTOR, PER CENT
LOAD: 1/2 ____ 3/4 ____ 4/4 ____

MINIMUM STARTING VOLTAGE IN PER CENT OF FULL VOLTAGE:
CALCULATED: _____
SPECIFIED: _____

OUTLINE DWG. NO. _____
ALLOWABLE STARTS _____
ACCELERATING TIME:
AT FULL VOLTAGE _____ SEC.
AT STARTING VOLTAGE _____ SEC.
LOCKED ROTOR PF _____ PER CENT
LOCKED ROTOR TORQUE _____ FT-LB
PULL UP TORQUE _____ FT-LB
BREAKDOWN TORQUE _____ FT-LB
TOTAL ROTOR WT _____ LBS
ROTOR INERTIA _____ LB-FT^2
OPEN CIR. TIME CONS'T. _____ SEC.
LOCKED ROTOR SAFE STALLED TIME:
AT FULL VOLTAGE _____ SEC.
AT STARTING VOLTAGE _____ SEC.
FOR VERTICAL MOTORS: REED FREQUENCY _____ CPS

SOUND LEVELS:
OVERALL MEAN SOUND PRESSURE LEVEL
RE 0.0002 DYNES/CM^2 AT 3 FEET _____ dBA FREE FIELD

OCTAVE BAND MEAN SOUND PRESSURE LEVEL
RE 0.0002 DYNES/CM^2 REFERENCE DISTANCE OF 5 FEET

FREQUENCY RANGE, CPS	LEVEL, dBC
90-180	_____
180-355	_____
355-710	_____
710-1400	_____
1400-2800	_____
2800-5600	_____
5600-11200	_____

FOR MOTORS FOR WHICH DIFFERENTIAL PROTECTION IS SPECIFIED:
STATOR CONN: WYE _____
DELTA _____

FOR HORIZONTAL MOTORS RATED 1000 HP AND LARGER AT 3000 RPM AND FOR ALL MOTORS RATED 3500 HP AND LARGER AT ALL SPEEDS:
CRITICAL SPEEDS: FIRST CRITICAL _____ RPM
SECOND CRITICAL _____ RPM

BLACK & VEATCH INTERNATIONAL
CONSULTING ENGINEERS
KANSAS CITY, MO.

MOTOR
INFORMATION SHEET

1D1-12

PART 2 - TECHNICAL REQUIREMENTS

TABLE OF CONTENTS

	Page
* Section 2A - SURFACE CONDENSER	2A-1 through 2A-11
2A.1 General	2A-1
2A.2 Code Requirements	2A-1
2A.3 Type	2A-1
2A.4 Arrangement	2A-1
2A.5 Performance	2A-1
2A.6 Performance Curves	2A-2
2A.7 Guarantees	2A-3
2A.8 Tests	2A-3
2A.9 Design	2A-4
2A.10 Materials	2A-5
2A.11 Construction	2A-6
2A.12 Tubes and Tube Sheets	2A-9
2A.13 Water Boxes	2A-9
2A.14 Erection Materials	2A-11
2A.15 Special Tools	2A-11
Drawing M6104-060873-1	
Drawing M6104-060873-2	
Section 2B - AIR REMOVAL EQUIPMENT	2B-1 through 2B-3
2B.1 General	2B-1
2B.2 Air Ejector	2B-1
2B.3 Steam Space Priming Ejector	2B-2
2B.4 Pressure Reducing Stations	2B-3
2B.5 Performance Curves	2B-3
Section 2C - CONDENSATE PUMPS	2C-1 through 2C-5
2C.1 General	2C-1
2C.2 Performance	2C-1
2C.3 Pump Characteristics	2C-1
2C.4 Characteristic Curves	2C-1
2C.5 Guarantees	2C-2
2C.6 Tests	2C-2
2C.7 Construction	2C-2
2C.8 Motors	2C-4
2C.9 Assembly	2C-4
2C.10 Manufacturing Tolerances	2C-4
2C.11 Spare Parts	2C-4
Motor Specification and Data Sheet	

*Not included in Contract

		Page
Section 2D - CIRCULATING WATER PUMPS		2D-1 through 2D-8
2D.1	General	2D-1
2D.2	Type	2D-1
2D.3	Arrangement	2D-1
2D.4	Design Conditions	2D-1
2D.5	Pump Characteristics	2D-2
2D.6	Characteristic Curves	2D-3
2D.7	Guarantees	2D-3
2D.8	Tests	2D-3
2D.9	Pump Construction	2D-4
2D.10	Motors	2D-6
2D.11	Assembly	2D-6
2D.12	Manufacturing Tolerances	2D-6
2D.13	Spare Parts	2D-7
Motor Specification and Data Sheet		2D 8
Drawing M6104-060873-3		
* Section 2E - TRAVELING WATER SCREENS		2E-1 through 2E-7
2E.1	General	2E-1
2E.2	Code Requirements	2E-1
2E.3	Type	2E-1
2E.4	Arrangement	2E-1
2E.5	Design	2E-1
2E.6	Materials	2E-2
2E.7	Main Frames	2E-2
2E.8	Screen Baskets	2E-3
2E.9	Chains	2E-3
2E.10	Drive Units	2E-3
2E.11	Guideways	2E-4
2E.12	Spray Cleaning Systems	2E-4
2E.13	Housings	2E-5
2E.14	Automatic Controls	2E-6
2E.15	Painting and Protective Coating	2E-6
Motor Specification and Data Sheet		2E-7

*Not included in Contract

Section 2D - CIRCULATING WATER PUMPS

2D.1 GENERAL. This section covers the design, performance, and construction requirements for three circulating water pumps. The three circulating water pumps are common to both Units 1 and 2.

Each of the circulating water pump units shall consist of the pump, drive motor, base plate, motor support, and other accessories required for a complete unit.

2D.2 TYPE. The pumps shall be of the vertical, wet pit, mixed flow type with below floor discharge and shall be of nonpullout construction.

2D.3 ARRANGEMENT. The equipment will be installed in a pump house at the intake structure and will be subjected to a humid, salt air atmosphere. All circulating water pump equipment shall be suitable for this exposure.

The pump setting arrangement shall be as indicated on Drawing M6104-060873-3 bound herein and as specified below:

Operating floor	109'-2"
Center of pump discharge	103'-2"
Pump pit lowest low water level	99'-10"
Bottom of pump pit	87'-0"

2D.4 DESIGN CONDITIONS. The pumps shall be designed for the following conditions:

Number to be furnished	3
Fluid pumped	Java Sea water
Temperature of fluid, F	85
Capacity, each pump, gpm	45,000
Total head, feet*	37

* Total head shall be the total pressure available at the pump discharge connection plus the static lift from the pump pit lowest low water level to the pump discharge connection. Pump inlet losses and friction losses through the pump column and elbow shall be charged to the pump. The total head of 37 feet stated is the sum of the required total pressure of 31.8 feet at the pump discharge connection and the static lift of 5.2 feet from the lowest low water level.

Approximate shutoff head, ft	95
Maximum speed, rpm	500

2D.5 PUMP CHARACTERISTICS. Pumps having steadily rising head-capacity characteristics are preferred; however, pumps having a cusp in the head-capacity characteristics will be acceptable provided such pumps will be guaranteed to perform without operational difficulties.

Pumps having low shutoff head, low required horsepower at shutoff, and maximum efficiency at approximately the rated design conditions are preferred.

Each pump shall also operate satisfactorily without cavitation, pitting, or excessive vibration or noise when operating under the following circulating water system conditions. The following curves represent approximate single pump system curves for the particular operating conditions. The point of intersection of the pump head-capacity curve with the following curves shall be considered the point of pump operation.

One pump serving one condenser:

Capacity, gpm	Head, feet
20,000	11.2
30,000	16.6
40,000	24.0
50,000	33.7

Two pumps serving two condensers:

Capacity, gpm	Head, feet
20,000	11.8
30,000	17.9
40,000	26.4
50,000	37.2

Three pumps serving three condensers:

Capacity, gpm	Head, feet
20,000	12.8
30,000	20.0
40,000	30.1
50,000	43.0

Two pumps serving three condensers:

Capacity, gpm	Head, feet
30,000	13.4
40,000	18.3
50,000	24.7
60,000	32.5
70,000	41.6

2D.6 CHARACTERISTIC CURVES. Certified pump characteristic curves shall be submitted. The curves shall indicate head, efficiency, net positive suction head required, and horsepower as ordinates, with capacity in gallons per minute as the abscissa. Characteristics of the maximum and minimum diameter impellers which may be fitted to the pump casing shall also be indicated.

Speed-torque curves for the pumps and motors shall be submitted. The combined moment of inertia (WK^2) of the pump and motor shall be submitted.

2D.7 GUARANTEES. The pumps and motors shall be guaranteed to deliver the specified capacity at the specified head and to operate in accordance with the certified pump characteristic curves.

The pumps shall be guaranteed to operate satisfactorily without cavitation, pitting, excessive vibration or noise in single operation (one pump serving one condenser) in parallel, (two pumps serving two condensers, three pumps serving three condensers and two pumps serving three condensers) and when starting or shutting down a pump with a second or third pump in operation.

The design of the pumps and motors shall be guaranteed to be such that no critical speed shall occur within a safe margin above or below the operating speed range of the pumps.

2D.8 TESTS. A shop test of the pump assemblies with the actual pump motors coupled to their respective pumps will not be required. The motors shall be tested separately from the pumps in accordance with requirements stated in Subsection 1D1.

Actual shop testing of the pumps is not required but pump curves constructed from prototype pumps shall be submitted, and the data and performance indicated therein shall be guaranteed. Pump curves shall take into account the expected operating points stated in the article PUMP CHARACTERISTICS above.

Six certified copies of all such test curves shall be submitted to the Engineer for acceptance as specified in Section 1C. These curves, where possible, shall indicate the actual test pressure and temperature conditions and the observed test points.

If the pump suction conditions (pressure and/or temperature) differ from the conditions listed under DESIGN CONDITIONS, appropriate correction factors shall be applied to the observed test curve and a corrected curve shall be indicated. This curve shall then represent the expected pump performance under DESIGN CONDITIONS based on the shop test data.

After installation of the equipment, a test may be performed by the Owner to check the pump characteristic curves when operating under the DESIGN CONDITIONS based on the certified pump curve or the shop test curve if available.

If the difference between the proposal curves, or actual field performance, and the expected pump performance indicated on the certified pump curve or the shop test curve, is in the opinion of the Engineer or Owner, too great, or if the pump fails to meet the other guarantees specified in Article 2D.7, the provisions of the article PERFORMANCE GUARANTEES in Section 1A shall apply.

2D.9 PUMP CONSTRUCTION. Pump construction shall be in accordance with the following requirements.

2D.9.1 Materials. Pump materials shall be equivalent to or shall exceed the strength and corrosion-erosion resistance of the following listed materials:

Impellers	18-8 stainless steel
Suction bells	14 per cent nickel cast iron
Pump bowls, including diffuser section	14 per cent nickel cast iron
Columns, including discharge elbow	Cast iron
Shafting	18-8 stainless steel
Shaft sleeves	18-8 stainless steel
Wearing rings	18-8 stainless steel
Shaft enclosing tubes	11-13 per cent chromium alloy steel
Outside bolting	Silicon bronze
Inside bolting	11-13 per cent chromium alloy steel

All components fabricated of Type 316 stainless steel shall be stress relieved to minimize stress corrosion.

2D.9.2 Impellers. The pump impellers shall be of the mixed flow type, and shall be of one-piece construction with Type 316 stainless steel key and thrust ring.

2D.9.3 Columns. The pump columns shall be provided with flanged joints to permit disassembly. The thickness of the casings shall include 1/4 inch corrosion thickness, minimum, over the required pressure thickness.

For maintenance, the length of pump sections shall not exceed 10 feet.

The pump discharge connections shall be flanged and shall be faced and drilled to mate with a 48 inch 125 pound ANSI standard flange.

2D.9.4 Shafts. Each pump line shaft shall be enclosed in a pipe of the materials specified under "Materials". Each shaft enclosing tube shall be provided with a tensioning device to exclude the pumped water from the shaft and bearings, and shall have a wall thickness of not less than 1/4 inch.

2D.9.5 Bearings and Lubrication. All radial shaft bearings shall be cutless rubber AISI 304 backed with stainless steel shaft sleeves and shall be of sufficient number to prevent whip. The rubber bearings shall include flushing grooves in the bearing.

A packing gland shall be provided at the top of the shaft enclosing tubes, accessible through openings in the motor support stand. Shaft sleeves shall be provided at the stuffing boxes. The boxes shall be of sufficient depth to permit ample packing. The packing glands shall be split to facilitate repacking of the boxes.

The space between the motor and the stuffing box shall be sufficient to permit removal of the packing gland and insertion of packing without dismantling the pump.

Water for bearing lubrication shall be the pumped fluid, supplied from the pump discharge except for pump startup at which time service water may be used. Strainers shall be provided for filtering the lubricating water.

2D.9.6 Motor Mountings. A heavy fabricated steel support pedestal shall be provided for mounting each circulating water pump motor. The pedestals shall be of cylindrical construction with access openings for convenient packing gland and coupling access. Ribs and reinforcements, if required, shall be on the inside. A pipe tap drain opening shall be provided in each mounting to drain leakage from the packing. All bolting, washers, and dowels required for securing the motors to the bases shall be Type 316 stainless steel and shall be furnished.

2D.9.7 Couplings. The shaft couplings between the motors and the pump shafts shall be of the rigid adjustable type attached to the shafts by press fit and keys. Other shaft couplings shall be either the bolted type or threaded type. A permanent plate shall be attached to each support pedestal giving direction of rotation and the coupling gap required for impeller positioning. All couplings shall be shop installed. Couplings and coupling guards shall be furnished in accordance with the requirements stated in Section 1B and the coupling guards, hinges, and bolts shall be stainless steel.

2D.9.8 Base Plates. Each pump shall be provided with a heavy structural steel base plate. Separate heavy steel soleplates shall be provided for grouting and shall be designed to permit removal of the entire pump and base plate without disturbing the soleplate or grout. Each base plate shall be provided with a drip lip and drainage grooves sloping to a drainage hole which will discharge into the pump pit. The soleplates shall be blasted clean to a near white finish per Steel Structures Painting Council Specification SSPC SP-10 and given a heavy coating of Carboline "Carbo-Zinc 11".

2D.9.9 Reverse Rotation. Each pump shall be designed so that reverse rotation caused by reverse water flow from an operating pump through the discharge header and back through an idle pump will not cause damage to any of the components of the pump and motor.

2D.10 MOTORS. The drive motors for the pumps shall be of solid shaft design. Circulating water pump motors shall be designed to withstand the forces of reverse pump rotation. The motor shall be in accordance with the requirements of Section 1D and the Motor Specification and Data Sheet included herein.

2D.11 ASSEMBLY. Each circulating water pump shall be shipped fully shop assembled as a single unit. Each motor drive shall be shipped fully shop assembled but separate from the pumps.

2D.12 MANUFACTURING TOLERANCES. The manufacturing tolerances for the circulating water pumps shall not exceed the following requirements:

± 1/8 inch on the elevation from the center line of the pump discharge to the center line of the base plate

± 1/8 inch from the center line of the shaft to the pump discharge flange face

± 1/8 inch offset between the center line of the shaft and the center line of the discharge

± 1/16 inch for pump discharge flange face being parallel to a plane passing through the center line of the shaft

2D.13 SPARE PARTS. In addition to the spare parts recommended in the bidder's proposal, the following spare parts shall be furnished with the circulating water pumps:

1 - set shaft packing

1 - each type of pump bearing assembly

1 - set of O-ring gaskets for all flanged joints

1 - set of special seals and gaskets for pump assembly

MOTOR CIRCULATING WATER PUMP

SPEC M-12A
PROJECT 6104

MOTOR SPECIFICATIONS

TYPE INDUCTION
QUANTITY THREE
HP AS REQUIRED, VOLTS 4000, PHASE 3, HERTZ 50, PF -
SERVICE: INDOOR X, OUTDOOR -
SERVICE FACTOR AS REQUIRED
NEMA DESIGN CLASS AS REQUIRED
INSULATION SYSTEM: CLASS B, STANDARD -, SEALED X, ENCAPSULATED -, AMB TEMP 40 C
MOUNTING: VERTICAL X, HORIZONTAL -
SHAFT: SOLID -, HOLLOW -
ENCLOSURE: TYPE GUARDED OPEN DRIPPROOF
SPACE HEATERS:
VOLTS 240
PHASE 1
WIRED TO SEPARATE TERMINAL BOX: YES X, NO -
INLET AIR FILTER NONE
OTHER REQUIREMENTS: STAINLESS STEEL SCREENS SHALL BE PROVIDED ON ALL VENTILATING OPENINGS.

CURRENT TRANSFORMERS NONE
SOLE PLATES: YES -, NO -
BEARINGS: TYPE KINGSBURY. GUIDE BEARINGS SHALL BE SPLIT SLEEVE OIL LUBRICATED TYPE. ALTERNATE BEARINGS: SPHERICAL ROLLER THRUST WITH DEEP GROOVE GUIDE BEARING BOTH HAVING MINIMUM AFBMA L-10 RATED LIFE OF 175,000 HOURS AT DESIGN DOWN THRUST CONDITIONS. MOTOR BEARINGS SHALL BE AIR COOLED. ALTERNATE COOLING USING OIL-TO-AIR HEAT EXCHANGER OR WATER COOLING USING SEA WATER FROM PUMP DISCHARGE ACCEPTABLE. ALTERNATE COOLING SHALL BE COMPLETE WITH ALL PIPING AND CONNECTIONS PROVIDED, AND SUITABLE FOR USE WITH SEA WATER IF WATER COOLED.

TEMPERATURE DETECTORS:
WIRED TO TERMINAL BLOCK IN SEPARATE DETECTOR TERMINAL BOX: YES X, NO -
WINDING:
NO. PER PHASE TWO
TYPE CHROMEL-ALUMEL THERMOCOUPLES
BEARINGS:
TYPE CHROMEL-ALUMEL THERMOCOUPLES
DISCHARGE AIR:
TYPE NONE
STARTING CONDITIONS:
BUS VOLTAGES, KV: PRIOR TO START _____, MINIMUM ALLOWABLE DURING START _____;
IMPEDANCES, % ON _____ MVA BASE: SOURCE- _____ +j _____ -BUS- _____ +j _____ -MOTOR
OTHER REQUIREMENTS: TERMINAL HOUSINGS SHALL BE DESIGNED AND CONSTRUCTED TO PERMIT MOTOR REMOVAL AFTER INSTALLATION WITHOUT DISCONNECTING MOTOR POWER AND ACCESSORY LEAD RACEWAYS FROM THE TERMINAL HOUSINGS.

BLACK & VEATCH INTERNATIONAL
CONSULTING ENGINEERS
KANSAS CITY, MO.

MOTOR
SPECIFICATION AND DATA SHEET

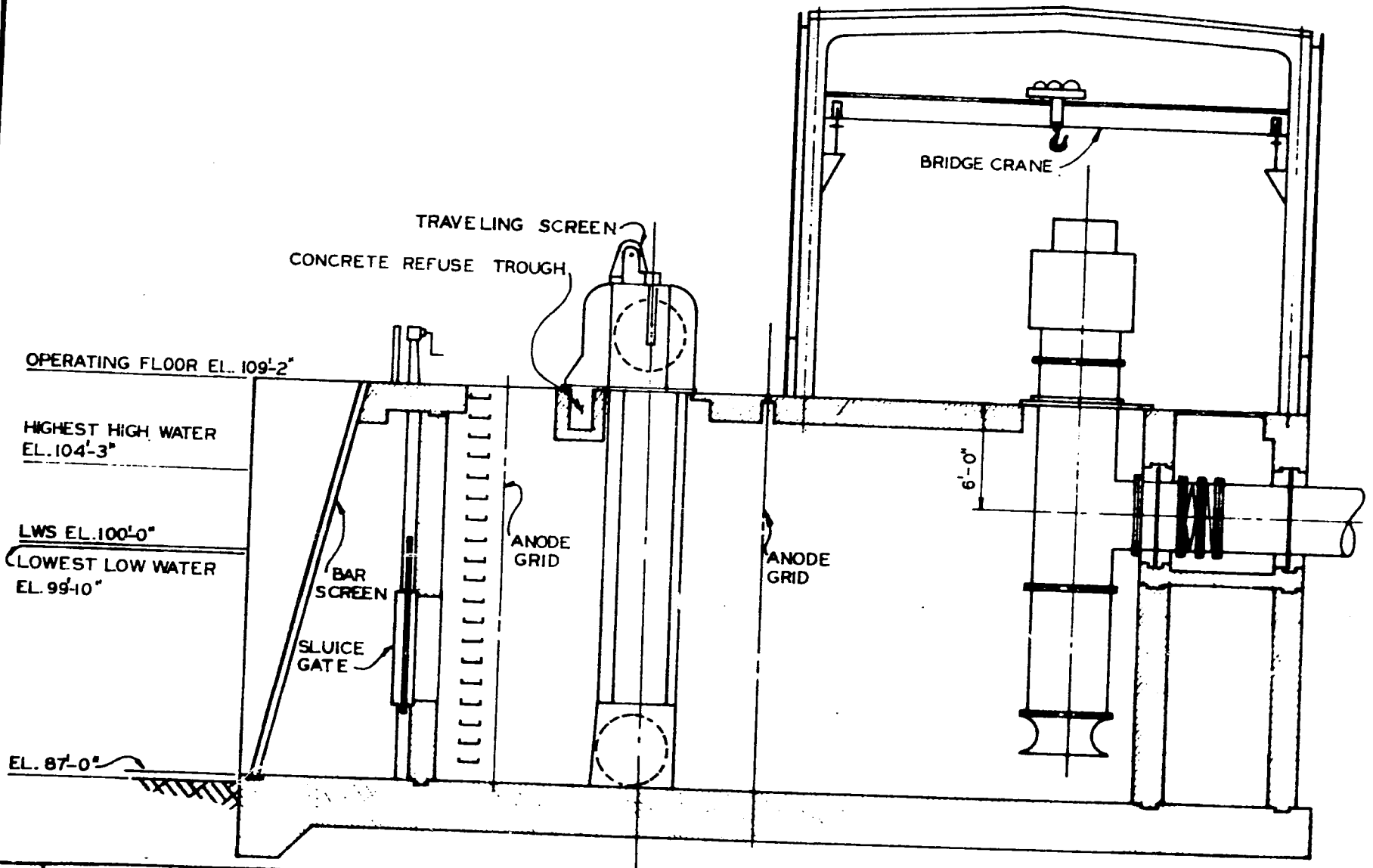

DATE	REVISION OR ISSUE	NO.	BY

BLACK & VEATCH INTERNATIONAL
CONSULTING ENGINEERS
KANSAS CITY, MO.

PERUSAHAAN UMUM LISTRIK NEGARA
AGENCY OF MINISTRY OF PUBLIC WORKS AND POWER
GOVERNMENT OF REPUBLIC OF INDONESIA
SEMARANG STEAM POWER PLANT
100 (2X50) MW
UNITS 1 & 2

INTAKE STRUCTURE AND PUMP HOUSE

BV: PROJECT
6104

BV: NUMBER
M6104-060873-3

APPENDIX

PERUSAHAAN UMUM LISTRIK NEGARA

SEMARANG STEAM POWER PLANT

SPECIFICATIONS AND DOCUMENTS
FOR
SURFACE CONDENSERS AND AUXILIARY EQUIPMENT

SPECIFICATION M-12A

ADDENDUM 1
January 14, 1974

Each bidder shall note these revisions to the contract documents and incorporate these revisions in his proposal. Each bidder shall attach a signed acknowledged copy of this entire addendum in the front of the specifications submitted with his proposal.

This addendum consists of this page.

1. Page A-1. Change the closing date for receipt of proposals indicated in the fifth and sixth lines of the first paragraph from "January 15, 1974" to "February 1, 1974".

BLACK & VEATCH INTERNATIONAL
Consulting Engineers

* * * * * * * * * * * * *

ACKNOWLEDGMENT

The undersigned bidder hereby certifies that the revisions set forth in this addendum have been incorporated in his bid and are a part of the contract documents.

Signed _____

Date _____

(PLN - 6104)
(SURFACE CONDENSER - M-12A)
(ADDENDUM 1)
011474

4970204 (15)
PN-AAD-777

PERUSAHAAN UMUM LISTRIK NEGARA
AGENCY OF MINISTRY OF PUBLIC WORKS AND POWER
GOVERNMENT OF REPUBLIC OF INDONESIA
SEMARANG STEAM POWER PLANT UNITS 1 AND 2

227p

LISTRIK NEGARA

AID LOAN 497-H-024

SPECIFICATIONS AND DOCUMENTS

HEAT EXCHANGERS

DESALINATION EQUIPMENT
SPECIFICATION 6104-M-12B

CONTRACT ISSUE

RILEY-BEAIRD, INC.
P.O. Box 1115
Shreveport, Louisiana 71130

BLACK & VEATCH INTERNATIONAL
consulting engineers
KANSAS CITY, MISSOURI, USA JAKARTA, INDONESIA

PERUSAHAAN UMUM LISTRIK NEGARA

SEMARANG STEAM POWER PLANT

SPECIFICATIONS AND DOCUMENTS
FOR
HEAT EXCHANGERS

Specifications M-12B

TABLE OF CONTENTS

		Page	through Page
I.	BIDDING REQUIREMENTS		
	Invitation to Bidders	A-1	A-2
	Instructions to Bidders	B-1	B-8
	Proposal	C-1	C-4
	* Proposal Data	D-1	D-35
	Black & Veatch International Letter Dated 1 May 1974	2 pages	
	Contractor's Proposal 152-L-491		
	Proposal Letter Dated 10 December 1973	2 pages	
	Revised Proposal Letter Dated 7 May 1974	3 pages	
	Flash Evaporator Scope of Supply	2 pages	
	Description	4 pages	
	Clarifications	1 page	
	Desalination Plant Scope of Supply	1 page	
	Description.	6 pages	
	Clarifications	1 page	
	Packaged Steam Generator Scope of Supply	1 page	
	Description and Clarifications	2 pages	
	Contractor's Letter Dated 26 January 1974	11 pages	
	Contractor's Letter Dated 4 February 1974	4 pages	
	Contractor's Letter Dated 22 February 1974	1 page	
	Contractor's Letter Dated 22 March 1974	1 page	
	Contractor's Telex Dated 7 May 1974	1 page	
	Contractor's Telex Dated 16 May 1974	1 page	
	Contractor's Letter Dated 26 May 1974	1 page	
	Contractor's Letter Dated 30 May 1974	1 page	
	Bid Bond	E-1	E-2
II.	CONTRACT FORMS		
	Contract Agreement	CA-1	CA-4
	Basis of Contract Award	BA-1	
	Performance Bond	PB-1	PB-2

* Pages D-6 through D-17 Deleted for Contract

		Page	through Page
III.	GENERAL CONDITIONS	GC-1	GC-32
IV.	SPECIFICATIONS		
	Part 1 - GENERAL REQUIREMENTS		
	Section		
	1A - General Description and Scope of the Work	1A-1	1A-5
	1B - General Equipment Specifications	1B-1	1B-17
	1C - Engineering Data	1C-1	1C-6
	1D - Electric Motors	1D-1	1D2-2
	Part 2 - TECHNICAL REQUIREMENTS		
	Section		
	** 2A - Feedwater Heaters	2A-1	2A-11
	2B - Deaerating Heater	2B-1	2B-7
	2C - Auxiliary Cooling Water Heat Exchanger	2C-1	2C-5
	2D - Flash Evaporator	2D-1	2D-8
	2E - Desalination Plant	2E-1	2E4-3
	2F - Package Steam Generator	2F-1	2F-8
	APPENDIX	-	
	Addendum 1 dated 14 November 1973	14 pages	
	Addendum 2 dated 20 November 1973	2 pages	
	Addendum 3 dated 18 December 1973	1 page	

** Deleted for Contract

INVITATION TO BIDDERS

HEAT EXCHANGERS
FOR
SEMARANG STEAM POWER PLANT
PERUSAHAAN UMUM LISTRIK NEGARA

Sealed proposals will be received by Perusahaan Umum Listrik Negara (an agency of the Ministry of Public Works and Power of the Government of the Republic of Indonesia), at the office of the Director of Construction, Perusahaan Umum Listrik Negara, Jalan Sunan Ngampel 1, Kebajoran Baru, Jakarta, Indonesia until 11:00 a.m. Western Indonesia Time on ~~December 20,~~ January 5 *~~1971~~ 1974 and then publicly opened for furnishing:

** ~~FOUR LOW PRESSURE FEEDWATER HEATERS~~
~~FOUR HIGH PRESSURE FEEDWATER HEATERS~~
~~TWO DEAERATING HEATERS~~
~~FOUR AUXILIARY COOLING WATER HEAT EXCHANGERS~~
ONE FLASH EVAPORATOR
ONE DESALINATION PLANT
ONE PACKAGE STEAM GENERATOR

to be incorporated in the new 100 MW (2-50 MW units) Semarang Steam Power Plant, located in the port area of the City of Semarang, Java, Indonesia.

United States funds for the project will be furnished under United States Agency for International Development (AID) Loan 497-H-024.

It will be a condition of the proposal that all proposed equipment and materials shall have their source and origin in countries designated as eligible in United States AID Geographic Code 941.

Proposals will be considered only from qualified manufacturers, or authorized representatives of qualified manufacturers, who regularly manufacture equipment and materials of the type specified and who have built three or more units with similar design requirements, each with not less than three years of successful operating experience.

Bidders must submit data with their proposals to establish their qualifications for performing the work. Proposals not accompanied by this data *** may be classified as nonresponsive and subject to ~~disqualification~~ rejection.

**** Prospective bidders may examine and obtain copies of the specifications and documents at the following offices:

1. Black & Veatch International
   Jalan Sunan Ngampel 1
   Kebajoran Baru
   Jakarta, Indonesia

* Revised in accordance with Addendum 3
** Not Included in Contract
*** Revised in accordance with Item 1 of Addendum 1
**** Revised in accordance with Item 2 of Addendum 1
(PLN - 6104)
(HEAT EXCHANGERS - M-12B)
102273

2. Black & Veatch International
1500 Meadow Lake Parkway
Kansas City, Missouri 64114 USA

*~~Each copy of the specifications delivered to prospective bidders will re-quire a deposit. Deposits for the specifications will not be refunded.~~

**All proposals must be made on the printed forms included in the specifications and documents.
Seven duplicate copies of each proposal will be required, each copy being bound with a copy of the specifications and documents.

Each bidder will be required to furnish a bid bond in the amount of not less than 10 per cent of the total value of the bid. The bid bond shall be as stipulated in the Instructions to Bidders included with the specifications and documents

All proposals shall be firm and cannot be altered, withdrawn, or resubmitted
***~~within~~ for a period of 100 days after the date set for opening of bids. All proposals shall be on a lump sum basis. Proposals may be submitted for either or both Items 1 and 2 as designated on the Proposal form. Proposals for individual heat exchangers will not be considered.

****~~The Perusahaan Umum Listrik Negara reserves the right to adopt the proposal which, in its judgment, is the lowest responsive proposal by a qualified bidder; to reject any and all proposals; and to waive minor irregularities in any proposal that is submitted.~~ Any award, waiver of irregularities, or rejections of proposals shall be subject to AID approval. Proposals received after the specified time of closing will be returned unopened.

MINISTRY OF PUBLIC WORKS AND POWER
represented by
PERUSAHAAN UMUM LISTRIK NEGARA
Ir. Bagoes Moedijantoro,
Director of Construction

* Refer to Item 3 of Addendum 1
** Revised per Item 4 of Addendum 1
*** Revised per Item 5 of Addendum 1
**** Refer to Item 6 of Addendum 1

(PLN - 6104)
(HEAT EXCHANGERS - M-12B)
102273

INSTRUCTIONS TO BIDDERS

B.1 GENERAL. Proposals are requested by the Perusahaan Umum Listrik Negara, an agency of the Ministry of Public Works and Power of the Government of the Republic of Indonesia, hereinafter referred to as the "Owner" for equipment, materials, and related work set forth in the attached specifications. All proposals shall be prepared and submitted in accordance with these instructions.

B.2 GENERAL PROJECT DESCRIPTION. The specified equipment and materials will be incorporated in the Owner's new Semarang Steam Power Plant. The plant will be located in the port area of the city of Semarang, Central Java, Indonesia. Initial plant construction will consist of two 50 MW oil fired steam electric generating units.

The dollar portion of the project will be financed by the United States Agency for International Development (AID) under Loan 497-H-024. The rupiah portion of the project will be financed by the Government of Indonesia.

B.3 BIDDER QUALIFICATIONS. In order for his proposal to be considered, the bidder must submit written evidence, satisfactory to the Owner, of his qualifications to satisfactorily perform the specified work. Qualification data shall be submitted with the proposal in a separate envelope clearly marked as follows:

QUALIFYING DATA

For _____
(Title of Work Proposed)

By _____
(Bidder's Name)

For

PERUSAHAAN UMUM LISTRIK NEGARA BID OPENING
FOR SEMARANG STEAM POWER PLANT

_____
(Date of Bid Opening)

The envelope of qualifying data shall be placed inside the envelope containing the proposal.

The bidder shall certify his qualifications by submitting evidence that he:

Is a qualified manufacturer, or authorized representative of a qualified manufacturer, who regularly manufactures equipment and materials of the type specified

Does not anticipate change in ownership or major policy during the period of the proposed work. If such change is anticipated the scope and effect thereof shall be defined.

Has adequate plant and manufacturing capacity available to do the work properly and expeditiously within the time period specified

Has, or can arrange for, adequate field service organization to provide technical services in Indonesia such as erection advisors or servicemen if such services are required by the specifications and associated documents

Has adequate financial status to meet the financial obligations incident to the work

Has no claims pending against him regarding the quality of performance of his work

Is a well established manufacturer having adequate technical knowledge and practical experience

Has designed and manufactured three or more units having similar design requirements, each of which has been in successful commercial operation for a period of not less than three years. The evidence shall consist of a selected listing of the units, indicating for each unit the owner's name, location, date of initial operation, and rating. The listing shall be specially prepared for this particular bidding and shall list only those units falling under the above requirements.

Has designed and manufactured equipment of the type proposed during the preceding two years

The bidder is advised that the above stated requirements are a minimum and that the Owner reserves the right to request the submittal of additional information.

The Owner reserves the right to reject the proposal of any bidder if, in the opinion of the Owner, the qualification data is incomplete or the bidder is not qualified to satisfactorily perform the work.

B.4 PROPOSALS. Seven copies of each proposal shall be prepared and submitted, each copy containing a complete bound copy of these contract documents. Proposals which are not prepared and submitted in accordance with these instructions may be rejected.

B.4.1 Preparation. Each proposal shall be carefully prepared using the proposal and data forms bound herewith. Entries on the proposal and data forms shall be typed, using dark black ribbon, or legibly written in black ink. All prices shall be stated in words and figures except where the forms provide for figures only. All proposals shall be in English.

* The bidder shall not alter any part of these specifications and documents in any way.

The bidder shall staple or otherwise bind, with each bound copy of contract documents submitted, a signed copy of each addendum issued for these specifications during the bidding period. The bidder shall assemble all drawings, catalog data, and other supplementary information necessary to thoroughly describe materials and equipment covered by the proposal, and shall attach such supplemental information to the bound copy of these specifications submitted with the proposal. No such descriptive data will in any way be construed to be a part of or to modify in any way the bidder's proposal.

B.4.2 Signatures. Each bidder shall sign the proposal with his usual signature and shall give his full business address. The names of all persons signing should also be typed or printed below the signature.

Bids by partnerships shall be signed with the partnership name followed by the signature and designation of one of the partners or other authorized representative. A complete list of the partners shall be included with the proposal.

Bids by a corporation shall be signed in the official corporate name of the corporation, followed by the signature and designation of the president, secretary, or other person authorized to bind the corporation.

A bid by a person who affixes to his signature the word "president", "secretary", "agent", or other designation, without disclosing his principal, will be rejected. Satisfactory evidence of the authority of the officer signing in behalf of the corporation shall be furnished. Bidding corporations shall designate the state in which they are incorporated and the address of their principal office.

The bidder's name stated on the proposal shall be the exact legal name of the firm.

* Revised in accordance with Item 7 of Addendum 1.

6.4.3 Submittal. Proposals shall be submitted in sealed envelopes endorsed on the outside with the bidder's name and address and marked on the outside as follows:

PROPOSAL FOR _____ (Name of equipment) _____
SEMARANG STEAM POWER PLANT
TO BE OPENED 11:00 A.M. WESTERN INDONESIA
TIME IN JAKARTA, INDONESIA on
_____, 197_.
(Date of Opening)

The proposal along with supplementary information and qualification data shall be transmitted to the following:

The original and four copies to:

Perusahaan Umum Listrik Negara
Jalan Suman Ngampel 1
Kebajoran Baru
Jakarta, Indonesia

* Attention: Ir. ~~Abdoes Moedijantoro~~ Bagoes Moedijantoro
Director of Construction

Two copies to:

Black & Veatch International
1500 Meadow Lake Parkway
Kansas City, Missouri USA 64114

Attention: Mr. L. J. Svoboda

Proposals may be submitted either by authorized local representatives or directly by qualified manufacturers. A single proprietary interest shall not submit multiple proposals for the same work even though the individual proposals are submitted under different names. The Owner reserves the right to reject proposals so submitted.

Proposals will be received up to the date and time specified in the INVITATION TO BIDDERS. Proposals received after that time will be returned to the sender unopened. It is the responsibility of the bidder to assure that his proposal is received by Perusahaan Umum Listrik Negara at their office prior to the time set for opening. Bidders shall send a cablegram to the Owner at the time their proposal is dispatched indicating that the proposal has been dispatched. The cablegram should be addressed to Ir. Bagoes Moedijantoro, Director of Construction, PLNPST, Jakarta, Indonesia.

* Revised in accordance with Item 8 of Addendum 1

B.4.4 Firm and Complete Proposals. All prices stated in the Proposal of the successful bidder shall be firm throughout the duration of the contract without escalation.

* Proposals shall be for the complete scope of the work specified in these contract documents. Proposals for individual components of the work will not be considered.

B.4.5 Withdrawal. Proposals may be withdrawn, altered, and resubmitted at any time before the time set for opening the bids. Proposals may not be
** withdrawn, altered, or resubmitted ~~within~~ for a period of 100 days thereafter.

B.5 INFORMATION TO BE SUBMITTED WITH PROPOSAL. Each bidder shall submit with his proposal the name of manufacturer and the type or model of each principal item of equipment or material he proposes to furnish. He shall also submit drawings and descriptive matter indicating general dimensions, principle of operation, and the materials from which the parts are made. Any bid not having sufficient descriptive matter to describe accurately the equipment or materials bid upon may be rejected as irregular. The drawings and descriptive matter submitted by the successful bidder will be retained by the Owner. Any material departure from these drawings and descriptive matter as submitted will not be permitted without written permission from the Owner.

Verbal statements made by the bidder at any time regarding quality, quantity or arrangement of equipment will not be considered.

If alternate equipment or materials are indicated in these specifications, the Bidder shall have the option of selecting any one of the alternates so indicated.

B.6 PROPOSAL GUARANTEE. Each proposal shall be accompanied by a proposal guarantee in an amount not less than 10 per cent of the total bid.

The proposal guarantee shall be made payable without condition, in USA Dollars to Perusahaan Umum Listrik Negara, and the amount thereof may be retained by said Perusahaan Umum Listrik Negara as liquidated damages if the bidder's proposal is accepted and the bidder fails to enter into contract in the form prescribed, with legally responsible surety, within 45 calendar days after the date he is awarded the contract.

The proposal guarantee of each unsuccessful bidder will be returned after award of contract or when his proposal is rejected. The proposal guarantee of the bidder to whom the contract is awarded will be returned when said bidder executes the contract and files a satisfactory Performance Bond. The proposal guarantee of the second lowest responsive bidder may be re-
*** tained for a period not to exceed 100 days pending the execution of the contract and Performance Bond by the successful bidder.

*Refer to Item 9 of Addendum 1.
**Revised in accordance with Item 10 of Addendum 1.
***Revised in accordance with Item 11 of Addendum 1.

The proposal guarantee shall be in the form of a bank draft, an irrevocable bank guarantee or an acceptable bidder's bond in the form included herein. The surety must be approved by the Owner and AID. Bank drafts or guarantees must be issued by a solvent USA bank meeting the criteria established by the USA Controller of Currency for guarantees issued by USA national banks. Bidder's bonds must be issued by companies authorized to do business in the bidder's state of incorporation and must meet the criteria established by the USA Treasury Department for acceptable sureties on U.S. Government bonds.

B.7 TAXES, PERMITS, AND LICENSES. The bidder's attention is directed to the provisions set forth in the GENERAL CONDITIONS under the article TAXES, PERMITS, AND LICENSES. Each bidder shall be responsible for determining the applicable taxes, permits, and licenses.

B.8 TIME SCHEDULE. The time schedule for performing the specified work will be a basic consideration of the Contract. The proposal shall be based upon submittal of drawings and engineering data in accordance with the requirements of Section 1C and performance of the work in accordance with the schedule specified in Section 1A. It will be necessary that the bidder satisfy the Owner of his ability to complete the work within the stipulated time. In this connection, attention is called to the provisions of the attached GENERAL CONDITIONS relative to delays and extensions of time.

B.9 LOCAL CONDITIONS. Each bidder is urged to thoroughly inform himself of all conditions and factors which would affect the prosecution and completion of the work.

It must be understood and agreed that such factors have been properly investigated and considered in the preparation of the proposal submitted. No claims for financial adjustment to any contract awarded for the work under these specifications and documents will be permitted by the Owner which are based on the lack of such prior information or its effect on the cost of the work.

B.10 INTERPRETATION OF SPECIFICATIONS. If any prospective bidder is in doubt as to the true meaning of any part of the proposed contract documents, he may submit to the Engineer a written request for an interpretation. The person submitting the request will be responsible for its prompt delivery. Any interpretation of the proposed documents will be made only by addendum mailed or delivered to each person receiving a set of such documents. The Owner will not be responsible for any other explanations or interpretations of the proposed documents.

B.11 BOND. The Contractor to whom the work is awarded will be required to furnish a performance bond to the Owner prior to signing of the contract. The bond shall be equal to 30 per cent of the dollar value of the contract and shall be payable in USA Dollars.

The bond shall cover the performance of the work included in these specifications. The bond shall be executed on the form provided a copy of which is attached hereto. The bond shall be signed by a surety authorized to do business in the state in which the Contractor is incorporated or has his principal office; acceptable as surety to the Owner and AID; and acceptable as surety under the criteria established by the USA Treasury Department for acceptable sureties on U.S. Government bonds.

B.12 INELIGIBILITY. No firm included by AID on its list of suspended, debarred, or ineligible bidders will be permitted to bid either individually or in a joint venture, nor shall any firm so listed qualify for performing the work as a subcontractor or otherwise.

No USA firm, or any firm owned more than 50 per cent by a USA firm shall be eligible for bidding or financing if the USA firm is not in compliance with Executive Order 11246, as amended, and regulations and orders issued thereunder.

B.13 ACCEPTANCE AND REJECTION OF PROPOSALS. *The Owner reserves the right to accept the proposal which, in its judgment, is the lowest responsive proposal by a qualified bidder and to reject any and all proposals and to waive minor irregularities in any proposal that is submitted. Any award, waiver of irregularities, or rejection of proposals shall be subject to AID approval.

A responsive proposal is one which accepts all of the terms and conditions of these specifications and documents without material modification. A material modification is one which affects in any way the price, quantity, quality, or delivery or installation date of equipment or materials; or the price, quality, scope, delivery date, or completion date of equipment and materials, or other services to be supplied or performed; or, which limits in any way any responsibilities, duties, or liabilities of the bidder or any rights of the Owner or of AID, as any of the foregoing have been specified or defined in these specifications and documents.

B.14 CURRENCIES. Proposal pricing shall be stated in USA Dollars and Indonesian Rupiahs as shown in the Proposal. It is intended that the Contractor be paid in the currencies expended by him. Costs incurred outside Indonesia shall be shown as USA Dollars. Pricing shall be in Indonesian Rupiahs for that portion of the work performed in Indonesia, except wage payment to expatriate employees and other allowable dollar costs.

*Refer to Item 12 of Addendum 1

*BID EVALUATION. Proposals will be evaluated on the basis of the fair price of equipment and materials specified. All other items such as service, spare parts, freight, and installation will not be included in the bid evaluation.

For purposes of evaluation, the Kuwait portion of proposal will be converted to Kuwait Dinars at the rate of US Dollar.

*Refer to Item 13 of Addendum 1.

PROPOSAL

To: Ir. Bagoes Moedijantoro, Director of Construction
PERUSAHAAN UMUM LISTRIK NEGARA
Jalan Sunan Ngampel 1
Kebajoran Baru, Jakarta, Indonesia

PROPOSAL FOR HEAT EXCHANGERS

Gentlemen:

The undersigned bidder having read and examined the specifications and associated contract documents for the above designated equipment which will be incorporated in the new Semarang Steam Power Plant does hereby propose to furnish the equipment and provide the services set forth in this Proposal.

All prices stated herein are firm and shall not be subject to escalation provided this Proposal is accepted within 100 days after the date of opening of the proposals.

The prices stated in USA Dollars include all USA taxes which might lawfully be assessed against the undersigned. All Indonesian taxes which might lawfully be assessed against the undersigned shall be for the account of the Owner in accordance with the provisions of Article GC.22.2 of the GENERAL CONDITIONS.

LUMP SUM PRICES

The undersigned bidder hereby proposes to furnish the feedwater heaters, deaerating heaters, and auxiliary cooling water heaters; and/or the flash evaporator, desalination plant, and package steam generator in accordance with the specifications and associated contract documents as defined in Article GC.1 of the GENERAL CONDITIONS for the following firm lump sum prices.

C.1 EQUIPMENT AND MATERIALS

Item 1. Lump sum price for furnishing eight feedwater heaters, two deaerating heaters, and four auxiliary cooling water heat exchangers fas USA port of shipment complete as specified:

Not included in our proposal

_____ Dollars ($ USA)
(Price in Words)

(PLN - 6104)
(HEAT EXCHANGERS - M-12B)
(ADDENDUM 1)
111473

Item 2. Lump sum price for furnishing one flash evaporator, one desalination plant, and one package steam generator fas USA port of shipment complete as specified:

* Two hundred eighty five thousand, two hundred

(Price in Words) Dollars ($285,200 USA)

C.2 FREIGHT

Item 1. Estimated lump sum price of ocean freight including port charges for handling, loading, and unloading onto barge; insurance; and port surcharge for shipping all equipment and materials furnished under C.1, Item 1 above from USA port to Port of Semarang, Indonesia:

Not supplied

(Price in Words) Dollars ($ USA)

Item 2. Estimated lump sum price of ocean freight including port charges for handling, loading, and unloading onto barge; insurance; and port surcharge for shipping all equipment and materials furnished under C.1, Item 2, above from USA port to Port of Semarang, Indonesia:

Forty thousand

(Price in Words) Dollars ($ 40,000 USA)

C.3 MANUFACTURER'S FIELD SERVICES

If required by the Owner, manufacturer's technical field services specified in Section 1A will be furnished at the following rates.

C.3.1 Representative's Daily Service Rate

Service rate for each technical field representative exclusive of living costs, expenses and transportation, and on the basis of six 8-hour days per week on the site:

One thousand, three hundred and twenty dollars/week

(Price in Words) Dollars ($1,320/week USA)

* Superceded and revised by Riley-Beaird letter dated 7 May 1974

(PLN - 6104)
(HEAT EXCHANGERS - M-12B)
(ADDENDUM 1)
111473

C.3.2 Overtime Rate

Service representative's time in excess of 48 hours per week will be provided at the following hourly rate:

Thirty-five dollars/hour

_____ Dollars ($35.00/hr. USA)
(Price in Words)

C.3.3 Expenses

Living costs and other expenses incurred in Indonesia will be invoiced at cost but will not exceed the following per diem:

Thirty-one thousand, one hundred and twenty-five

_____ Rupiahs (Rp 31,125 IND)
(Price in Words)

C.3.4 Transportation

Estimated cost per round trip from the bidder's office to Semarang, Central Java, Indonesia and return, including living costs and other expenses incidental to travel, but excluding per diem salary cost:

* One thousand, seven hundred

_____ Dollars ($1,700 USA)
(Price in Words)

and

Sixty-two thousand, two hundred and fifty

_____ Rupiahs (Rp62,250 IND)
(Price in Words)

The rupiahs to dollar conversion rate is 415 Rupiahs per USA Dollar.

The undersigned hereby declares that only the persons or firms interested in the Proposal as principal or principals are named herein, and that no other persons or firms than herein mentioned have any interest in this Proposal or in the contract to be entered into; that this Proposal is made without connection with any other person, company, or parties likewise submitting a proposal; and that it is in all respects for and in good faith, without collusion or fraud.

* Superceded and revised by Riley-Beaird letter dated 7 May 1974

If this Proposal is accepted, the undersigned bidder agrees to submit engineering data, provide services, and complete delivery of the equipment and materials in accordance with the schedules stipulated in the specifications. The undersigned fully understands that adherence to the schedules stipulated is of the essence of the contract.

If this Proposal is accepted, the undersigned hereby agrees to enter into a contract on the attached forms within 45 calendar days from the date of notice by the Owner of award of contract and to furnish a Performance Bond satisfactory to the Owner.

Dated at SHREVEPORT LA this 11 day of DEC, 1973

Bidder RILEY BEAIRD INC

By [illegible]

Title V. P. MAXIM DIV

Business Address of Bidder PO BOX 1115
SHREVEPORT LA 71130

State of Incorporation DELEWARE

Address of Principal Office PO BOX 1115
SHREVEPORT LA 71130

(PLN - 6104)
(HEAT EXCHANGERS - M-12B)
102273

PROPOSAL DATA

D.1 GENERAL. Each bidder shall submit complete and definitive information on his offering in sufficient detail to permit a complete analysis of the bid. The requirements stated in the INSTRUCTIONS TO BIDDERS relative to information submittal shall be followed.

The requirements for information contained in this section are basic requirements. Additional information shall be provided as requested by the Engineer.

D.2 PERFORMANCE CURVES. The following performance curves shall be furnished as specified in Part 2:

* Feedwater Heaters, Deaerating Heater, and Auxiliary Cooling Water Heat Exchangers

The manufacturers' standard specification sheet, indicating performance and construction materials, shall be submitted for each heat exchanger.

Flash Evaporator

Heat and material balance diagrams for the evaporator operating at design conditions with full recycle flow shall be submitted.

Performance curves shall be submitted indicating the quality of distillate in milligrams per liter.

Desalination Plant

Heat and material balance diagrams for the evaporator operating at design conditions shall be submitted.

Performance curves indicating the quality of distillate in milligrams per liter shall be submitted.

Pump characteristic curves

Speed-torque curves for the pumps

Package Steam Generator

Forced draft fan characteristic curve

Steam temperature curve

*Not included in Contract

D.3 DRAWINGS. Outline drawings shall be submitted indicating the following information:

Major dimensions of each heat exchanger

Preliminary nozzle locations

Support details

* Feedwater Heaters

Sectional view of heater indicating materials, methods of construction, and provisions for drainage

Detail of high pressure channel and channel cover joint seal

Detail of low pressure channel and channel cover joint seal

Detail of subcooler section construction

Typical tube sheet drilling and tube rolling

Deaerating Heater

Sectional view of deaerating heater indicating materials, methods of construction, and provisions for tray removal

Auxiliary Cooling Water Heat Exchangers

Internal construction indicating provisions for complete drainage

Flash Evaporator

Sectional view of evaporator indicating materials, and methods of construction

Complete description of expansion provisions between shell and tubes

Tube sheet and steam lane layout

Desalination Plant

Desalination plant outline drawings, with dimensional information, indicating the overall size, configuration, and arrangement of the complete unit and each major component thereof

*Not included in Contract

Sectional views indicating materials and methods of construction of all components

Evaporator tubes and shell expansion provisions

Evaporator tube sheet and steam lane layout

Details of pump shaft seals

Details of bearing construction

Basic electrical diagrams illustrating the principles of operation of the unit and its associated controls

Package Steam Generator

Outline drawings, with dimensional information, indicating the overall size, configuration, and arrangement of the complete unit and each major component thereof

Basic electrical diagrams illustrating the principles of operation of the unit and its associated controls

All drawings shall be in sufficient detail to permit preliminary plant arrangement studies to be made.

*D.4 SUPPLEMENTARY INFORMATION. The following supplementary information shall be submitted:

Tools

A list of all maintenance tools to be provided for the equipment specified herein

** Feedwater Heaters

Description of manufacture, testing and inspection procedures

Detailed description of tube installation procedures

Description of channel design features to insure optimum tube entrance conditions

Description of cover handling devices

Description of proposed method for protection of heaters during manufacture, shipment, and storage at jobsite

*Refer to Item 17 of Addendum 1
**Not included in Contract

* Deaerating Heater

Description of manufacture, testing and inspection procedures

Description with details of construction of the tray and tray support system

Description of proposed method for protection of deaerating heater during manufacture, shipment, and storage at the jobsite

Description with details of construction of the proposed manholes

Auxiliary Cooling Water Heat Exchanger

Description of manufacturing, testing, and inspection procedures

Detailed description of tube installation procedures

Description of general heat exchanger design features including channel design and baffle design and arrangement

Description of proposed method for protection of the heat exchangers during manufacture, shipment, and storage at the jobsite

Flash Evaporator

Description of manufacture, testing, and inspection procedures

Description of proposed method for protection of evaporator during manufacture, shipment, and storage at the jobsite

Desalination Plant

Description of manufacture, testing, and inspection procedures

Description of proposed method for protection of unit during manufacture, shipment, and storage at the jobsite

Package Steam Generator

Description of manufacturing, testing, and inspection procedures

Description with details of construction of shell including insulation and lagging

*Not included in Contract

Tube data including tube sizes, gages, materials, and quantities

Feedwater quality requirements

Flame safeguard system description

Feedwater control system description

Complete combustion control equipment description

Trim and piping tabulation

Allowable forces and moments

Information on sound pressure levels

Description of proposed method for protection of the steam generator during manufacture, shipment, and storage at the site

D.5 EQUIPMENT DATA. The information required on the following pages is to assist the Engineer in evaluating the Proposal and in making an accurate estimate of the work required to install and erect the equipment and materials.

The data listed herein is stated for definitive purposes and for the convenience of the Owner.

The data listed herein shall not relieve the Contractor of his responsibility for meeting the requirements of the detailed specifications.

Note: Write entries boldly with black ink or type entries using carbon black ribbon. Do not use ball point pens. The completed pages will be reproduced by blue line printing.

Section 2D - FLASH EVAPORATOR

RILEY BEAIRD INC
(Bidder's Name)

	Brine Heater	Vapor Condenser
Manufacturer and model number	MAXIM MODEL 1-TCFE-36	
*Effective tube surface, sq ft	560.9	463.3
*Ineffective tube surface, sq ft	12.6	16.7
Total tube surface, sq ft	573.5	480
Tubes		
** Material	90-10 Cu-Ni A-249 TP-304 SS	B-111
Gage	3/4"ODx 18 BWG	5/8"ODx 20 BWG
Active length, ft	7.56	7.5
Number of tube passes	TWO	TWO
* Number of tubes	97 193 per pass	98 196 per pass
Design heat transfer coefficient Btu/hr/sq ft/F	560	400
Shell		
Material, ASTM number	A-242 CORTEN	
Thickness, in.	0.50 INCHES	
Degasifier material	N/A	
*** Mist eliminator material, ASTM number	316 S/S Monel	
Brine pump requirements (pump furnished under separate specifications)		
Flow, gpm	30 GPM	
TDH, excluding friction in Owner's brine piping, ft		
Available NPSH above Owner's supporting steel, ft	2 FT	

(Trim Line)

(PLN - 6104)
(HEAT EXCHANGERS - M-12B)
(ADDENDUM 1)
111473

* Revised per Riley-Beaird letter dated 4 February 1974
* Revised per Riley-Beaird letter dated 29 January 1974
Revised per Riley-Beaird letter dated 26 January 1974

Brine distribution system	RILEY - BEAIRD, INC. (Bidder's Name)
Header pipe size	1½"
Manufacturer and model number of butterfly valve	N/A
Number and size of nozzles	ONE - 1½"
Brine circuit pressure drops at design conditions	20 PSI TOTAL
Brine flow, gpm	30 GPM
Brine heater tubes, psi	
Brine distribution piping and nozzles, psi	
Total, psi	
Tube velocity in brine heater tubes, fps	6 FPS
Vapor condenser pressure drop in tubes at design flow, psi	5 PSI
Tube velocity in vapor condenser tubes at design flow, fps	6 FPS
Description of ejector system	SINGLE STAGE
Ejector steam requirements	150 lb/hr @ 135 psi
Dimensions, ft	
Overall length	12'-6"
Overall width	6'-7"
Overall height	8'-0"
Tube removal space requirements	91 INCHES
Weights, lb	
Evaporator, complete, empty	26,700 #

(Trim Line)

RILEY-BEAIRD, INC.
(Bidder's Name)

Evaporator, complete, flooded	34,000 #
Heaviest piece to be handled during erection	COMPLETE UNIT
Brine heater extraction steam volumes at design conditions	
Steam volume, ~~cubic feet~~ #/HR	13,464 #/HR
Condensate volume, ~~cubic feet~~ #/HR	13,464 #/HR
Connections, size and number	1-½" STEAM TO AIR EJECTO
Steam inlet	1-12" STEAM SUPPLY TO HE
Brine pump suction	
Brine pump discharge	
Makeup water inlet	1-1½"
Effluent outlet	1-2½"
Brine heater drips	2-½"
Air suction	1-½"
Blowdown	2-½" & 1-2"
Cooling water inlet and outlet	2-8"
Vacuum	1-1"

(Trim Line)

Relief valves	Brine Heater Tubes	Vapor Condenser Tubes	Brine Heater Shell
Manufacturer	KUNKLE	KUNKLE	KUNKLE
Size	1"	1"	2"

(PLN - 6104)
(HEAT EXCHANGERS - M-12B)
102273

RILEY BEAIRD INC
(Bidder's Name)

	Brine Heater Tubes	Vapor Condenser Tubes	Brine Heater Shell
Model number	291	291	191

Field assembly

Describe the amount of field assembly welding, bolting, accessory installation, piping, wiring and other field work to be done

WELDING - NONE

BOLTING - SKID & TERMINAL P

WIRING - LAMPS FOR SIGHT GLASS WINDOW

(Trim Line)

(PLN - 6104)
(HEAT EXCHANGERS - M-12B)
(ADDENDUM 1)
111473

RILEY - BEARD, INC.
(Bidder's Name)

List components to be field assembled. Give dimensions and weights

NONE

Will evaporator performance and operation be guaranteed based on the water analysis specified herein

YES

(Trim Line)

(PLN - 6104)
(HEAT EXCHANGERS - M-12B)
081373

Section 2E - DESALINATION PLANT

RILEY - BEARD INC
(Bidder's Name)

Evaporator

Manufacturer's model number: MAXIM MODEL 240-6

	Brine Heater	Vapor Condenser
Effective tube surface, sq ft		
Ineffective tube surface, sq ft		
Total tube surface, sq ft	463	1945
Number of tube passes	FOUR	TWO PASSES/STAGE
Number of tubes	98	TOTAL 594
Design heat transfer coefficient, Btu/hr/sq ft/F	590	520
Tubes		
Material, ASTM number	B-111	B-111
Gage and size, in.	3/4" OD x 20 BWG	3/4" OD x 20 BWG
Active length, ft	84"	106"
Evaporator shell		
Material, ASTM number	FLASH CONDENSER A-242 FLASH CHAMBER A-402	
Thickness, in.	FLASH COND. 1/4" FLASH CHAMBER 1/4"	
Brine heater shell		
Material, ASTM number	CORTEN STEEL A-242	
Thickness, in.	0.25	
Mist eliminator material, ASTM number	MONEL	
Deaerator material, ASTM number		

(Trim Line)

(PLN - 6104)
(HEAT EXCHANGERS - M-12B)
081373

	RILEY-BEAIRD, INC. (Bidder's Name)
Steam ejectors	
Manufacturer and model number	Schutte & Koerting, Inc.
Size, in.	1½" B Type 540 T-2 & 2" A
Material	C. I. Body St'l Tail Piece
Vacuum system condenser	
Shell material, ASTM number	A-283-C
Shell thickness, in.	0.25
Tube material, ASTM number	90-10 B-111
Tube thickness, in.	3/4" OD x 20 BWG
Brine pump	
Manufacturer and model number	Gould Model 3196
Capacity, gpm @ TDH	670 GPM @ 45 PSIG
Materials	
Casing	Bronze
Impeller	316 S/S
Shaft	316 S/S
Motors	
Manufacturer	Reliance
Type designation and frame size	
Rating	30 hp 1450 rpm
	3 Phase 380 Volts

(Trim Line)

(PLN - 6104)
(HEAT EXCHANGERS - M-12B)
081373

RILEY-BEAIRD, INC.
(bidder's Name)

Enclosure	TEFC - WATER PROOF
Full load current, amperes	
Locked-rotor current, amperes	
Distillate pumps	
Manufacturer and model number	GOULD MOD 3196
Capacity, gpm @ TDH	50 GPM @ 50 PSIG
Materials	
Casing	BRONZE
Impeller	316 S/S
Shaft	316 S/S
Motors	
Manufacturer	RELIANCE
Type designation and frame size	
Rating	5 hp 2900 rpm
	3 Phase 380 Volts
Enclosure	TEFC WATER PROOF
Full load current, amperes	
Locked-rotor current, amperes	
Space heater rating, kW	
Connections, size and number	
Steam inlet	ONE - 1½" ONE - 8"

(Trim Line)

(PLN - 6104)
(HEAT EXCHANGERS - M-12B)
081373

RILEY-BEARD, INC.
(Bidder's Name)

Brine pumps discharge	TWO - 4"
Feedwater inlet	ONE - 8"
Distillate pumps discharge	TWO - 1"
Brine heater drips	TWO - 3/4"
Relief valves	RUPTURE DISC
Manufacturer	CONTINENTAL
Model number	#6
Size	4"
Chemical feed system	
Metering pump	
Manufacturer	PRECISION CONTROL PRODUCTS
Model number	MODEL 5001-11
Capacity	5 gph @ 150 psi
Materials	
Pump head	ACRYLIC PVC
Diaphragm	HYPALON VITON
Motor electrical requirements	
Rating	_____ hp _____ rpm
	1 Phase 50 Hertz 220 Volts
Current at rated volts	_____ Full Load _____ Locked-rotor

(Trim Line)

RILEY-BEAIRD, INC.
(Bidder's Name)

Mixer motor	
Manufacturer	PRECISION CONTROL PRODUCTS
Type designation and frame size	TYPE 3033-11 FRAME 48C
Rating	_____ hp _____ rpm
	1 Phase 220 Volts
Enclosure	TEFC
Full load current, amperes	
Locked-rotor current, amperes	
Level switch	
Manufacturer	WARRICK
Probe material	MONEL
Desalination system dimensions	
Overall length, ft	39'-0"
Overall width, ft	15'-0"
Overall height, ft	12'-6"
Tube removal space requirements, ft	11'-6"
Desalination plant weights	
Empty, lbs	41,250
Flooded, lbs	53,850

(Trim Line)

RILEY-BEAIRD, INC.
(Bidder's Name)

Heaviest piece to be handled during erection: DESALINATOR 37,000 POUNDS

Field assembly

Describe the amount of field assembly, welding, bolting, accessory installation, piping, wiring and other field work to be done:

WELDING - NONE
BOLTING - SKIDS, INTERFACE & ACCESSORY INSTALL. AIR SUPPLY PIPING PURCHASER HOOK-UP
WIRING - CONTROLLERS TO MAXIM SUPPLIED PANEL W/SWITCHES

List components to be field assembled. Give weights and dimensions:

HOLDING TANK W/PIPING AND PUMPS SEPARATELY SKIDDED SHALL BE HOOKED UP TO DESALINATOR AND PURCHASERS PIPING

4000 POUNDS

Performance Data

Feedwater requirements

Flow, gpm: 720

Pressure, psi: 45 PSI

Tube velocity in evaporator condenser tubes, fps: 6 FPS

(Trim Line)

(PLN - 6104)
(HEAT EXCHANGERS - M-12B)
081373

RILEY-BEAIRD INC.
(Bidder's Name)

Tube velocity in brine heater tubes, fps	6 FPS
Pressure drop across evaporator condenser tubes at design flow, psi	15 PSI
Pressure drop across brine heater tubes at design flow, psi	10 PSI
Brine heater steam requirements	10,000 lbs/hr @ 12 psi
Ejector steam requirements	466 lbs/hr @ 135 psi
Brine discharge rate, gpm	655 GPM
Distillate output, gpm	50 GPM
Distillate output quality, total solids maximum, mg/l	5.0 PPM PER PARA 2E-4 OF SPECIFICATIONS

(Trim Line)

Section 2F - PACKAGE STEAM GENERATOR	RILEY-BEAIRD, INC. (Bidder's Name)
Manufacturer	CONTINENTAL BOILERS, INC. BOILER EQUIP. & CONTROL
Model	F 132 B 400-2
Dimensions, ft	
Width	5'-4"
Length	21'-5"
Height, not including stack	9'-7"
Weight of complete unit, lbs	
Dry	31,200 POUNDS
Operating	
Shipping	31,200 POUNDS
Space required at front or rear of unit for tube removal, ft	FRONT 12'-10" REAR 14'-2"
Design pressure, psi	200 PSIG
Effective heating surface, sq ft	2000
Fire side heating surface per horsepower, sq ft	5
Overall guaranteed efficiency at design conditions	80 % MINIMUM
Temperature of gas leaving boiler at design conditions, F	NOT TO EXCEED 125°F ABOVE BOILER WATER TEMP.
Maximum lagging surface temperature with 95 F ambient air, F	
Steam outlet connection	
Size	8"
Type	FLANGED 300#

(Trim Line)

(PLN - 6104)
(HEAT EXCHANGERS - M-12B)
081373

	RILEY-BEAIRD-INC. (Bidder's Name)
Burner	
Manufacturer	OIL PRESSURE ATOMIZING
Type	MECHANICAL
Oil pressure required, psi	200 PSIG
Turndown ratio	30 TO 100 %
Forced draft fan	
Manufacturer	CHICAGO BLOWER
Type	BACKWARD AIRFOIL
* Operating speed, rpm	~~3600~~ 3000
Rating, cfm and static pressure at 105 F	
Motor	
Manufacturer	
Type designation and frame size	
Rating	hp rpm
	Phase Volts
Speed, rpm	
Enclosure	
Full load current, amperes	
Locked-rotor current, amperes	
Space heater rating, kW	

(Trim Line)

(PLN - 6104)
(HEAT EXCHANGERS - M-12B)
081373

* Revised in accordance with Riley-Beaird letter dated 4 February 1974

	RILEY-BEAIRD, INC. (Bidder's Name)
Type of feedwater control	FLOAT OPERATED
Combustion control system	
Manufacturer	HONEYWELL
Type	MODUTROL
Flame safeguard system	
Manufacturer	FIREYE-ECA
Type	5022
Insulation type and thickness	FIBERGLASS 2"
Feedwater pump	
Manufacturer and model number	AURORA H6T
Capacity, gpm @ TDH	52 GPM
Materials	
Casing	
Impeller	
Shaft	
Motor	
Manufacturer	
Type designation and frame size	
Rating	20 hp, 1500 rpm, 3 Phase, 380 Volts

(Trim Line)

(PLN - 6104)
(HEAT EXCHANGERS - M-12B)
G81373

* Revised in accordance with Riley-Beaird letter dated 4 February 1974

	RILEY-BEAIRD, INC. (Bidder's Name)
Enclosure	TEFC
Full load current, amperes	
Locked-rotor current, amperes	
Space heater rating, kW	
Feedwater tank	
Material, ASTM designation	
Thickness, inches	
Shell	
Head or bottom	
Head or top	
Weight, lb	
Size, inches	
Length	
Diameter	
Capacity, gal	
Valves	
Safety valves	
Number furnished	TWO
Manufacturer	LONERGAN
Size and figure number	ONE - 1½" FIG 11W203 ONE - 2" FIG 11W204

(Trim Line)

RILEY-BEAIRD, INC.
(Bidder's Name)

	2 Inch & Smaller	2-1/2 Inch & Larger
General service valves		
Manufacturer		
Figure number		
Blowdown valves		
Number furnished	THREE - BOTTOM BLOWDOWN	
Manufacturer	EVERLASTING	
Figure number		
Feedwater stop and check valves	Stop Valve	Check Valve
Manufacturer		DURABLA
Figure number		
Steam drum outlet valves	Stop Check	Stop Valve
Manufacturer	JENKINS	FIG 293
Figure number		
Gage glasses		
Manufacturer		
Model number		
Pressure gages		
Manufacturer		
Model number		
Stack		
Diameter, inches	N/A	
Type of connection	N/A	

(Trim Line)

(Bidder's Name)

Total electric power requirements, amperes at 416 volts, 3 phase, 50 hertz

Extent of field assembly required

(Trim Line)

(PLN - 6104)
(HEAT EXCHANGERS - M-12B)
081373

BLACK & VEATCH INTERNATIONAL
CONSULTING ENGINEERS

TEL (816) 361-7000
TELEX 42-[illegible]
CABLE ADDRESS BEACVEATCH

1500 MEADOW LAKE PARKWAY
MAILING ADDRESS: P.O. BOX 20, 1405
KANSAS CITY, MISSOURI 64114

AIR MAIL

Perusahaan Umum Listrik Negara
Semarang Steam Power Plant Units 1 and 2
USAID Loan 497-H-024
Heat Exchanger Specification 6104-M-12B

BVI Project 6104
BVI File M-12B
1 May 1974

Riley Beaird
P. O. Box 1115
Shreveport, Louisiana 71130

Attention: Mr. Frank Zarambo

Gentlemen:

A quick rebid based on the original specifications for Heat Exchangers C.1 Item 2 of Heat Exchangers Specification 6104-M-12B consisting of flash evaporator, desalination plant and package steam boiler is requested because of the technical and/or commercial deviations from the specifications. The following clarifications are to be considered in this rebid.

Flash Evaporator

1. The brine heater may be external to the evaporator shell.

2. The brine heater and vapor condenser may have straight or U-tubes.

3. Brine heater tubes may be 90-10 cu-ni

4. The flash evaporator shall be designed and piped within the package for emergency operation. Materials shall be furnished which will permit a maximum of 100 hours per year operation with normal maintenance while using sea water as makeup.

5. A distillate pump shall be provided which shall operate under the same discharge head as the desalination plant distillate pump.

BLACK & VEATCH INTERNATIONAL

Riley Beaird
Mr. Frank Zarambo

BVI Project 6104
1 May 1974

Desalination Plant

1. All surfaces or internals of the evaporator shell which are wetted by sea water or brine shall be constructed of 90-10 cu-ni

2. Requirements for the acid feed subsystem shall be deleted; however, provisions for acid cleaning shall be included.

3. Single pumps shall be furnished for all pumping requirements and shall be piped and wired into the package; however, one complete assembly of each pumping unit shall be provided with the equipment, to be stored as spares.

Package Steam Generator

1. Burners shall be of the air atomizing or mechanical atomizing type.

Two copies of the proposal, using the original specifications shall be delivered to the offices of Black & Veatch International in Kansas City on or before 9 May 1974.

Very truly yours,

BLACK & VEATCH INTERNATIONAL

L. J. Svoboda

LJS:hn

cc: Mr. A. M. Acheson

RILEY | RILEY-DEALAND, INC.

MAXIM EVAPORATORS

December 10, 1973

Perusahaan Umum Listrik Negara
Jalan Sunan Ngampel 1
Kebajoran, Baru
Jakarta, Indonesia

Attention: Ir Bagoes Moedijantoro

Subject: Proposal, Item 2
Semarang Steam Power Plant
Specifications 6104-M-12B
Maxim Ref. 152-L-491

Gentlemen:

We are pleased to submit for your review and consideration our proposal for Item 2 only, consisting of one (1) flash evaporator, one (1) desalination plant and one (1) packaged steam generator, FAS Houston, Texas.

We further enclose, as requested per the subject specification, qualification data describing our ability and other supporting evidence which establishes Maxim as a qualified manufacturer of distillation equipment.

The flash evaporator offered is the standard Maxim TCFE design and is a single effect flash type evaporator with integral brine heater and vapor condenser constructed within a single shell.

Our offering for the desalination plant also incorporates the standard Maxim packaged land based desalinator design, which is currently in use in Sumatra, as well as other parts of the world. The Maxim MSF (multi-stage flash) desalinator provides:

a) Low temperature operation
b) Cross tube design, allowing complete removal of the vapor condensers
c) Low profile
d) Outdoor design
e) Unattended operation
f) Complete factory test, prior to shipment
g) Proven design, resulting in maximum reliability and minimum maintenance and downtime

Our quotation also includes the packaged steam generator. Based on our experience, we offer a Continental horizontal fire tube, scotch marine type boiler, as manufactured by Boiler Engineering and Supply, Inc., of Phoenixville, Pennsylvania. As with all our vendor supplied equipment, reliability and quality material are used as our purchasing criteria, rather than low price, to insure maximum and trouble-free operation.

We sincerely welcome your comments and the invitation to discuss our offering with you and the cognizant engineers at your earliest convenience. We thank you for this opportunity to present our quotation and trust that our offering is favorably received.

Very truly yours,

Frank J. Zarambo, Sales Manager
Land Based Desalinators

FJZ:lp

Enclosures

RILEY | RILEY-BEAIRD, INC.

May 7, 1974

CHARLES D. ROSI
Division Vice President
Maxim Evaporator Products

Black & Veatch International
P. O. Box 8405
Kansas City, Missouri 64114

Attention: Mr. L. J. Svoboda

Subject: Perusahaan Umum Listrik Negara
Semarang Steam Power Plant, Units 1 and 2
Heat Exchanger Spec 6104-M-12B
BVI Project 6104, File M-12B
Maxim Ref. 152-L-491-A

Gentlemen:

In response to your letter dated 1 May 1974, we are pleased to submit our revised quotation superceding our original offering 152-L-491, dated December 10, 1973.

With reference to our price schedule, pages C-1 through C-3 inclusive, the following is offered for your valued consideration and acceptance.

	Para. C.1	Equipment and Materials
	Item 1	Not included in our proposal.
	Item 2	Two hundred ninety-nine thousand, eight hundred and fifty dollars and no cents ($299,850.00 U.S.).
	Para. C.2	Freight
	Item 1	Not supplied.
*	Item 2	Forty-five thousand dollars and no cents ($45,000.00 U.S.).
	Para. C.3	Manufacturer's Field Services
	C.3.1	One thousand, three hundred and twenty dollars ($1,320.00 U.S.) per week.

*Corrected to $40,000 by Riley-Beaird telex dated 7 May 1974

Para. C.3 (Continued)

C.3.2 Overtime Rate

Thirty-five dollars and no cents per man-hour ($35.00/man-hour).

C.3.3 Expenses

Thirty-one thousand, one hundred and twenty-five Rupiahs per diem (Rp 31.125 Ind.).

C.3.4 Transportation

One thousand, nine hundred dollars and no cents ($1,900.00 U.S.).

and

Sixty-two thousand, two hundred and fifty Rupiahs (Rp 62.250 Ind.).

This revised offering is based on the following terms and conditions:

a) Shipment of the equipment quoted herein is to be made within seventeen (17) ~~eighteen (18)~~ months after acceptance of a purchase order and receipt of the applicable letter of credit.

Cdr 5-24-74

b) This quotation is firm, not subject to escalation, for a period of twenty (20) days from the date of this offering.

c) The conversion rate, Rupiahs to U.S. dollars, is 415 Rupiahs per U.S.A. dollar.

d) Spare parts, including complete pump assemblies, are not included as a part of our offering. It is the intent of Riley-Beaird to enter into separate agreement for the supply of such spare parts. A complete list of recommended spares will be submitted for your consideration and selection within 90 days from receipt of your purchase order.

e) All other terms and conditions and other descriptions as noted in our original offering dated December 10, 1973, and BVI specification 6104-M-12B apply, except as modified herein, * and in these Contract documents.

* Revised for Contract

Specifically,

1) The clarifications noted in BVI letter dated 1 May 1974 apply.

2) References to factory operational tests prior to shipment, as noted within Riley-Beaird's technical description, are to be deleted and are considered unnecessary by Riley-Beaird for these specific models offered.

We thank you for this opportunity to present our quotation and trust that this offering is favorably received. We welcome your comments and look forward to the opportunity to discuss our current proposal.

Very truly yours,

Charles D. Rose

CDR:lp

cc: Mr. T. E. Lindemuth
Mr. F. J. Zarambo

RILEY BEAIRD INC.
MAXIM EVAPORATORS
318/868-4441 • Telex 50-7446 • Twx 510-973-4153

Riley-Beaird proposes to supply, FAS Houston, Texas, one (1) flash evaporator, Maxim model 1-TCFE-36S, as shown on drawings 152-080-D-016 and 152-081-E-010, Flow Diagram and Outline and Setting Plan, respectively, and further described per Section II-b of this proposal.

A. Unless otherwise stated, the following equipment, supplies and other services are to be furnished by Riley-Beaird, comprising one (1) complete flash evaporator assembly:

1. Evaporator shell, complete with heat exchangers, vapor separator and all necessary connections, lighting devices and other appendages, mounted on a structural steel foundation
2. Condensate cooler
3. After condenser
4. Air ejector
5. Liquid level gage glasses
6. Chemical feed system
7. Relief valves
8. Thermostatic steam trap
9. Feed sediment strainer
10. Feed orifice
11. Interconnecting piping as shown
12. Valves as shown
13. Instruction manuals
    a. Preliminary (one copy)
    b. Final (10 copies)
14. Drawings for approval (six sets)
15. Drawings for distribution (six sets)
16. Final drawings (reproducible, one set)
17. Microfilm aperture cards (three sets)
18. Services of a trained serviceman as required
19. Bid and performance bond as required
20. Ocean freight and insurance from Houston, Texas to Port of Semarang

B. The following material, services and supplies are to be furnished by the purchaser and are not included in our proposal:

1. Motor controllers and starters
2. Brine pump
3. Distillate pump
4. All electrical wiring, conduits, etc.
5. All thermometers, gages and other instrumentation
6. Insulation
7. All services and other material as shown and indicated per paragraph 1A.5, page 1A-3 of B and V specification 6104-M-12B
8. All piping from and to the flash evaporator terminal connections as shown, including valves and other controls

9. Interconnecting steam and condensate piping from the flash evaporator, desalinator and the packaged steam boiler and condensate receiver system

I. General

A. The Maxim model 1-TCFE-36S is a single effect flash type evaporator with an integral brine heater and vapor condenser, arranged and constructed in a single shell, and supplied as a packaged plant, complete with the ancilliary equipment and piping as described herein.

B. The evaporator is to be capable of producing 12,500 lbs/hr (36,000 U.S. GPD) of distillate containing less than 5 ppm total dissolved solids, when supplied with steam and cooling water in accordance with Riley-Beaird drawing 152-080-D-016, Flow Diagram. The feed to the evaporator is to be supplied by the purchaser at 60 PSIG maximum.

II. Evaporator

A. Shell

The evaporator shell is to be a horizontal, cylindrical type designed in accordance with ASME Code, Section VIII. A code stamp will not be supplied for the shell. The shell is to be constructed of Corten steel and is to be suitably mounted on a structural foundation. The evaporator shell is to be supplied with two observation windows mounted on either side of the shell. A lighting fixture with a flexible fixture support is supplied with each observation port to provide illumination of the evaporator internals. The evaporator shell is to be further fitted with a hinged access port, which incorporates one of the observation windows.

B. Brine Heater

The evaporator is to be furnished with a removable brine heater of the U-bend design. The brine heater shall be two pass with steam in the tubes. The brine heater is to consist of 3/4" OD x 18 BWG stainless
* steel, ~~type 304~~ tubes, mechanically expanded into a Corten steel tube sheet. The tube sheet holes shall be arranged in a triangular pitch with a minimum distance center to center of 15/16". Each tube hole is to be doubled grooved, and the tube hole edges shall be chamfered on the shell side.

The brine heater bundle is to be fitted into the evaporator shell and assembled with a removable steam inlet head or bonnet, constructed of Corten steel. The tube bundle when assembled shall be encased within a shroud, internal to the shell which forms the flashing device.

C. Vapor Condenser

The evaporator is to be furnished with a two pass removable vapor condenser of the U-bend design. Cooling water from the Java Sea shall flow through the tubes. The condenser is to consist of 5/8" OD x 20 BWG 90-10 copper nickel alloy tubes, mechanically expanded into a 90-10 copper nickel tube sheet. The tube sheet

C. Vapor Condenser (Continued)

holes shall be arranged on a triangular pitch with a minimum center to center distance of 15/16". Each tube hole is to be doubled grooved, and the tube hole edges are to chamfered on the shell side.

The condenser bundle is to be fitted into the evaporator shell and assembled with a removable water box of 90-10 copper nickel alloy with structural steel flanges. The condenser tube bundle is to be internal to a distillate collection trough, and adequate baffles are to be provided to effectively cool and sweep the noncondensibles from the evaporator shell.

D. Vapor Separator

A monel metal, mesh type, vapor separator is to be supplied so that the vapors produced will pass through the separator prior to condensing. The vapor separator is to remove any water droplets and/or entrained particles from the vapors.

E. Vacuum System

1. Air Ejector

A single stage, steam-operated air ejector is supplied to provide initial vacuum and remove the noncondensible gases liberated during the flashing action. Motive steam to the air ejector shall be 150 pounds per hour at 135 PSIG. The air ejector shall take suction at the vapor condenser neck, and the effluent discharge shall be directed to a after condenser located on the evaporator foundation.

The air ejector shall be supplied with a cast iron body and tail piece and a stainless steel nozzle and steel diffuser.

2. After Condenser

A single pass, shell and tube type heat exchanger shall be supplied to condense the motive steam from the air ejector. The noncondensibles are to be vented to the atmosphere. The raw water feed to the evaporator shall flow through the tubes and act as the condensing media.

The after condenser shall be supplied with a 3", Sch. 40, steel, A-106-B shell and steel A-285-C tube sheet. The tubes shall be 5/8" OD x 18 BWG stainless steel, type 304 tubes, mechanically expanded into the tube sheet. The tube sheet holes shall be double grooved. The after condenser shall be fitted with removable steel front and rear water boxes.

F. Condensate Cooler

A four pass, shell and tube type U-bend design heat exchanger shall be supplied and mounted on the evaporator foundation to cool the condensate drains to 185°F. Raw water feed to the evaporator shall flow through the tubes.

The condensate cooler shall be supplied with a 6", Sch. 40, steel A-106-B shell. The tube bundle shall be removable and tubes shall be 5/8" OD x 18 BWG stainless steel type 304, mechanically expanded into a steel, A-285-C tube sheet. The tube holes are to be double grooved.

A removable multi-pass water box, constructed of steel, shall be supplied.

G. Chemical Feed System

A chemical feed system is to be supplied to pretreat the incoming feed water to the evaporator. The feed system shall contain a mixing tank with motor driven agitator, an adjustable positive displacement metering pump, valves and fittings, all mounted on a structural steel base and foundation.

H. Liquid Level Indicators

Two (2) liquid level indicators (gage glasses) are to be supplied and fitted to the evaporator shell. One shall indicate the brine level within the shell and another shall indicate the liquid level of the distillate in the condenser hot well. The gage glass assembly shall be Penberthy.

I. Relief Valves

Three (3) relief valves shall be provided and located as follows:

1. 2" - Evaporator shell
2. 1" - Condenser tube side (water box)
3. 1" - Brine heater tube side (water box)

J. Thermometers and Gages

1. Thermometers

All thermometers are to be purchaser-supplied and installed. Suitable connections will be provided where practical and identified on drawing 152-080-D-016, Flow Diagram.

2. Gages

All pressure and vacuum (compound) gages are to be purchaser-supplied and installed. Suitable connections will be provided as required and shown on drawing 152-080-D-016, Flow Diagram.

K. Piping

The interconnecting piping and connections supplied with the evaporator shall be in accordance with Riley-Beaird drawings 152-080-D-016 and 152-081-E-010, Flow Diagram and Outline drawings, respectively.

L. Assembly and Tests

The evaporator and all components and ancilliary equipment to be supplied is to be completely assembled at our facility.

All heat exchangers are to be individually tested, prior to assembly with the evaporator, in accordance with ASME Code Section VIII and stamped accordingly. Necessary certificates will be supplied as required.

* The evaporator assembly shall be hydrostatically tested ~~and subjected to a factory operational test prior to shipment to insure operational capacity and economy.~~ Upon completion, the evaporator is to be drained, cleaned and painted in accordance with Riley-Beaird standard commercial procedures.

M. Preparation for Shipment

The evaporator is to be completely drained and all openings and connections suitably sealed to prevent water and/or foreign matter from entering the system during shipment storage and handling.

Disassembly of the plant shall be the minimum necessary to facilitate shipment and safeguard parts vulnerable to damage, pilferage and loss. The extent of disassembly shall be confined to the removal of protruding parts that would otherwise increase cubage.

Removed parts shall be matchmarked where practical and/or identified to facilitate assembly at the site. Removed bolts, nuts, pins, screws and washers shall be reinstalled in mating parts and secured to prevent loss.

N. Packing/Packaging

The evaporator shall be adequately protected to best commercial practices and crated for export shipment. The method and construction of the crating and/or boxing shall be at the descretion of Riley-Beaird to insure delivery of the equipment at the site. All boxes and crates shall be identified and marked in accordance with the purchaser's requirements. Special emblems, as required, will be affixed to all containers.

*Deleted for Contract

A. The required brine pump and motor are not included in our proposal. Unless otherwise modified, at the discretion of the purchaser, the brine pump is to be supplied and installed at the site by others. All necessary piping, supports, foundation, wiring and controls are to be furnished by the purchaser.

* B. The required distillate pump and motor are not included in our proposal. Unless otherwise modified, the distillate pump is to be supplied and installed at the site by others. All necessary piping, supports, foundation, wiring and controls are to be furnished by the purchaser.

C. The evaporator shell shall be fabricated of Cor-Ten steel and shall include the corrosion allowance specified per para 2D.9, page 2D-5. Based on our experience and confirmed by tests conducted by OSW at the Freeport, Texas test facility, Cor-Ten steel has displayed excellent corrosion resistance qualities. Maxim has supplied a Desalinator to Castle Harbour Hotel on Bermuda in 1968, partially constructed of Cor-Ten, and no evidence of corrosion attack is apparent. In fact, original machining marks are still visible. We therefore offer the Cor-Ten steel construction as an alternate material as permitted per para 2D.8.2, page 2D-4.

D. The evaporator shall be fitted with two gage glasses as indicated per para H, page 3, Section II-b of this proposal. The gage glasses shall be Penberthy model 37-a series.

E. The brine heater and vapor condenser heat exchangers shall incorporate the U-bend design and be removable to effect full and complete inspection and maintenance of the heat exchangers. Further, the condensate cooler is also to be supplied with a removable U-bend tube bundle.

F. The design parameters of the evaporator offered herein are based on the intent of para 2D.8.1, page 2D-4 and the design pressures established for the service. Therefore, the evaporator and other heat exchangers shall be designed for the following pressures:

Evaporator shell	30" Hg vacuum to 50 PSI
Brine heater tube side	135 PSIG
Vapor condenser tube side	275 PSIG

*Refer to BVI letter dated 1 May 1974

RILEY BEAIRD inc.
MAXIM EVAPORATORS
318/868-4441 • Telex 50-7446 • Twx 510-973-4153

Riley-Beaird proposes to supply, FAS Houston, Texas, one (1) Desalinator, Maxim model 24D-6, as shown on drawings 152-081-E-011 and 152-080-E-017, Outline and Setting Plan and Flow Diagram, respectively, and further described per Section III-B of this proposal.

A. Unless otherwise stated, the following equipment, supplies and other services are to be furnished by Riley-Beaird, comprising one complete Desalinator:

1. Maxim model 24D-6 six stage flash type Desalinator, complete with integral condensers and other appendages, mounted on a structural steel foundation
2. Sea feed heater - after condenser
3. Two stage air ejector
4. Spray chamber
5. Mixing and deaeration tank
6. Reflux cooler
7. Solenoid dump valve
8. Water meter
9. Thermometers and gages, instruments and controls as shown
10. Control panel
11. Chemical feed systems
12. Pumps and motors as shown
13. Interconnecting piping as shown
14. Drawings for approval (six sets)
15. Drawings for distribution (six sets)
16. Final drawings (reproducible, one set)
17. Microfilm aperture cards (three sets)
18. Instruction manuals
    a. Preliminary (one copy)
    b. Final (10 copies)
19. Services of a trained serviceman as required
20. Bid and performance bond as required
21. Ocean freight and insurance from Houston, Texas, to port of Semarang

B. The following material, services and supplies are to be furnished by the purchaser and not included in our proposal:

1. All services, material and labor as shown and indicated per paragraph 1A.5, page 1A-3 of B and V specification 6104-M-12B
2. All piping from and to the flash evaporator terminal connections as shown, including valves and other controls
3. Interconnecting steam and condensate piping from the flash evaporator, Desalinator and the packaged steam boiler and condensate receiver system
4. Insulation
5. Motor controllers and starters
6. Electrical supply
7. Salinity equipment and cell(s)

I. General

The Maxim model 24D-6 Desalinator is a multi-stage, horizontal, low pressure (vacuum) flash type distillation plant, supplied as a packaged plant, complete with all ancilliary equipment and piping as described herein and arranged in accordance with Riley-Beaird drawing 152-081-E-011, Outline and Setting Plan.

The desalination plant is to be capable of producing 25,000 lbs/hr (72,000 U.S. GPD) of distillate containing less than 5 ppm total dissolved solids, when supplied with steam and other services as shown on Riley-Beaird drawing 152-080-E-017, Flow Diagram.

II. Desalinator

A. Shell

The Desalinator shell is to consist of six (6) flash stages and is to be arranged in a horizontal configuration. The shell is to be constructed of 90-10 copper nickel alloy for all surfaces wetted with sea water and brine. External structural steel stiffeners shall be provided, and the shell assembly shall be mounted on a structural steel foundation.

Each flash stage is to be fitted with an internal flashing device, and stages 2, 3 and 4 are to contain an adjustable brine butterfly valve to control and maximize the flashing action of the brine. Adjustment is to be made externally without plant shutdown or loss of production. Each flash stage is to be further fitted with an observation port and a vapor separator of monel mesh. The vapor separator shall be removable for inspection and replacement through an access port.

The vapors released in each flash stage shall rise and pass through the vapor separator where any entrained droplets shall be removed. The vapors are to be then directed downward to the stage condenser, located beneath the flashing section. The vapor spaces, condenser section and distillate collection trough shall be constructed of Cor-Ten steel.

B. Condenser

Each stage condenser shall contain a removable condenser bundle of the U-bend design. Sea water shall flow through the tubes. All tubes shall be 3/4" OD x 20 BWG, 90-10 copper nickel, and all six stage condenser tubes shall be mechanically expanded into a common 90-10 copper nickel alloy tube sheet. The condenser bundle shall contain the necessary supports and required baffles to effect the removal of noncondensible gases.

The condenser tube sheet and water box shall be bolted to the Desalinator shell. The condenser water box shall be common to all six stages and shall contain the necessary ribs to effect the flow of sea water through the tubes. The water box shall be constructed of 90-10 copper nickel alloy with a steel flange.

I. General

The Maxim model 24D-6 Desalinator is a multi-stage, horizontal, low pressure (vacuum) flash type distillation plant, supplied as a packaged plant, complete with all ancilliary equipment and piping as described herein and arranged in accordance with Riley-Beaird drawing 152-081-E-011, Outline and Setting Plan.

The desalination plant is to be capable of producing 25,000 lbs/hr (72,000 U.S. GPD) of distillate containing less than 5 ppm total dissolved solids, when supplied with steam and other services as shown on Riley-Beaird drawing 152-080-E-017, Flow Diagram.

II. Desalinator

A. Shell

The Desalinator shell is to consist of six (6) flash stages and is to be arranged in a horizontal configuration. The shell is to be constructed of 90-10 copper nickel alloy for all surfaces wetted with sea water and brine. External structural steel stiffeners shall be provided, and the shell assembly shall be mounted on a structural steel foundation.

Each flash stage is to be fitted with an internal flashing device, and stages 2, 3 and 4 are to contain an adjustable brine butterfly valve to control and maximize the flashing action of the brine. Adjustment is to be made externally without plant shutdown or loss of production. Each flash stage is to be further fitted with an observation port and a vapor separator of monel mesh. The vapor separator shall be removable for inspection and replacement through an access port.

The vapors released in each flash stage shall rise and pass through the vapor separator where any entrained droplets shall be removed. The vapors are to be then directed downward to the stage condenser, located beneath the flashing section. The vapor spaces, condenser section and distillate collection trough shall be constructed of Cor-Ten steel.

B. Condenser

Each stage condenser shall contain a removable condenser bundle of the U-bend design. Sea water shall flow through the tubes. All tubes shall be 3/4" OD x 20 BWG, 90-10 copper nickel, and all six stage condenser tubes shall be mechanically expanded into a common 90-10 copper nickel alloy tube sheet. The condenser bundle shall contain the necessary supports and required baffles to effect the removal of noncondensible gases.

The condenser tube sheet and water box shall be bolted to the Desalinator shell. The condenser water box shall be common to all six stages and shall contain the necessary ribs to effect the flow of sea water through the tubes. The water box shall be constructed of 90-10 copper nickel alloy with a steel flange.

C. Sea Feed Heater

A multi-pass shell and tube sea feed heater shall be supplied and located parallel to the first flash stage. Sea water shall flow through the tubes. The SFH shall be fitted with 3/4" OD x 20 BWG 90-10 copper nickel alloy straight tubes and shall be mechanically expanded into the front and rear tube sheets. The tube sheets shall be 90-10 copper nickel alloy and shall be fixed.

The SFH shell shall be steel, A-285-C and is to be supplied with a flanged steam inlet, fitted with a suitable impingement baffle to prevent direct impingement of the steam on the tubes. A condensate hot well is provided for the collection of the condensate. Removable front and rear water boxes shall be provided.

D. After Condenser

The after condenser shall be integral with the sea feed heater described per para II-C above. The discharge of the air ejectors shall be directed to the section of the SFH shell when condensing of the motive steam takes place. The noncondensibles shall be vented to the atmosphere. The drains of the after condenser shall be directed as required by the purchaser.

E. Air Ejectors

A two stage, steam operated, air ejector is to be supplied. Motive steam is to be 466 lbs/hr total to both stages. The first stage air ejector is to take suction from the last flash stage through the spray chamber and the effluent is to be discharged to the second stage air ejector suction. The total effluent is to be directed to the after condenser.

F. Spray Chamber

A spray chamber is installed in the suction to the first stage air ejector. The spray chamber shall be vertically mounted and cooled distillate introduced into the chamber to condense any vapors. The drains shall be directed to the distillate pump suction.

G. Mixing and Deaeration Tank

A sea water mixing tank of 1,000 gallons capacity shall be supplied and mounted on a structural steel foundation. The tank shall be fiberglass constructed and fitted with a suitable cover.

Sea water is to be introduced via a spray nozzle(s) into the tank for deaeration and mixing. A 10" flanged overflow connection is provided. A recirculation line from the brine pump(s) discharge shall be installed for recirculation and chemical cleaning.

The sea water feed to the Desalinator shall be made by the sea water feed pump.

H. Reflux Cooler

A single pass, shell and tube type heat exchanger shall be supplied to provide cooling of a portion of distillate produced for introduction into the spray chamber and seal water for the distillate pumps. Sea water shall flow through the tubes. The tubes shall be 3/4" OD x 20 BWG 90-10 copper nickel and shall be mechanically expanded into fixed 90-10 copper nickel front and rear tube sheets. Removable front and rear water boxes of 90-10 copper nickel construction with steel flanges shall be installed.

I. Solenoid Dump Valve

A three-way manual reset solenoid operated dump valve is to be supplied and located in the distillate pump(s) discharge. The solenoid dump valve is to be arranged in a "de-energized to dump" position, so that upon loss of current or high salinity reading, the distillate is to be automatically diverted to waste. Upon return to normal operating conditions, the solenoid valve must be manually reset.

J. Salinity Cell

Provisions are to be made for installation of a salinity cell or conductivity device, furnished by the purchaser. A suitable connection will be furnished in the distillate pump discharge for locating the cell. The purchaser is to advise complete descriptive data regarding the owner-supplied equipment.

K. Water Meter

A distillate water meter shall be supplied to record the distillate production. The meter shall be of the integrating flow type, readable to the nearest 10 gallons. The meter body shall be bronze. A four-way, distillate by-pass valve shall be provided.

L. Thermometers and Gages

Pressure gages and thermometers shall be supplied as shown on drawing 152-080-E-017, Flow Diagram.

1. Thermometers

All thermometers shall be 5" dial, bimetallic type and mounted locally. Thermometer wells of material compatible for the service is to be supplied. All thermometers are to be in degrees centigrade.

2. Gages

All pressure and compound gages shall be locally mounted except as noted herein. Gages are to be $4\frac{1}{2}$" diameter and supplied with a phenolic case and bronze bourdon tube.

M. Level Controllers

Level controllers are to be installed in the suction legs of the brine and distillate pumps. The level controllers are to be fitted with high and low level alarm switches.

M. Level Controllers (Continued)
A high and low level alarm switch is to be also provided in the sea feed heater condensate hot well.

N. Pumps and Motors
The following pumps and motors are to be furnished and installed:

* 1. Sea water feed pump (one required)
* 2. Brine pump (two required)
* 3. Distillate pump (two required)
* 4. Desuperheater pump (one required)

* Each brine and distillate pump supplied is to be rated at full capacity of the Desalinator. Refer to Technical Data Sheet, Pump and Motor Information for pump and motor characteristics.

O. Chemical Feed Systems
** Two chemical feed systems are to be supplied.

1. One complete chemical feed system is provided for the injection of phosphate into the sea water feed to the Desalinator to inhibit the formation of scale within the Desalinator. The chemical feed system is to consist of a plastic mixing tank with a motor driven agitator and an adjustable positive displacement injection pump. The assembly is to be mounted on a steel foundation, complete with valves, fittings and necessary interconnecting piping.

** 2. One complete feed system, similar to Item O-1 as described above, is supplied for the injection of acid into the feed.

P. Piping
The interconnecting piping and connections supplied with the evaporator shall be in accordance with Riley-Beaird drawings 152-080-E-017 and 152-081-E-011, Flow Diagram and Outline drawings, respectively.

Q. Assembly and Tests
The evaporator and all components and ancilliary equipment to be supplied is to be completely assembled at our facility.

All heat exchangers are to be individually tested, prior to assembly with the evaporator, in accordance with ASME Code Section VIII and stamped accordingly. Necessary certificates will be supplied as required.

* The evaporator assembly shall be hydrostatically tested and subjected to a factory operational test prior to shipment to insure operational capacity and economy. Upon completion, the evaporator is to be drained, cleaned and painted in accordance with Riley-Beaird standard commercial procedures.

R. Preparation for Shipment

The evaporator is to be completely drained and all openings and connections suitably sealed to prevent water and/or foreign matter from entering the system during shipment storage and handling.

Disassembly of the plant shall be the minimum necessary to facilitate shipment and safeguard parts vulnerable to damage, pilferage and loss. The extent of disassembly shall be confined to the removal of protruding parts that would otherwise increase cubage.

Removed parts shall be matchmarked where practical and/or identified to facilitate assembly at the site. Removed bolts, nuts, pins, screws and washers shall be reinstalled in mating parts and secured to prevent loss.

S. Packing/Packaging

The evaporator shall be adequately protected to best commercial practices and crated for export shipment. The method and construction of the crating and/or boxing shall be at the descretion of Riley-Beaird to insure delivery of the equipment at the site. All boxes and crates shall be identified and marked in accordance with the purchaser's requirements. Special emblems, as required, will be affixed to all containers.

RILEY BEAIRD inc.

MAXIM EVAPORATORS

318/868-4441 • Telex 50-7446 • Twx 510-973-4153

TECHNICAL DATA SHEET
PUMP AND MOTOR INFORMATION
MAXIM REF 152-L-491

DATA LISTED IS FOR ONE DESALINATOR

1. Service	Feed	Brine	Distillate	Desuperheater	
2. Quantity	one	two	two	one	
3. Pump Mf'r.	Goulds			Ampco	
4. Size	4x6-13	4x6-13	1x2-8	1x3/4KC	
5. Type		Horizontal Centrifugal	Horizontal Centrifugal	Horizontal Centrifugal	
6. Liquid	sea water	brine	feed water	condensate	
7. USGPM-Normal					
8. USGPM-Rated	670	670 ea.	50 ea.	3	
9. TDH	45 PSIG	45 PSIG	50 PSIG	40 PSI	
10. NPSH	Flooded	6'-0"	3'-6"	3'-6"	
11. Materials					
a) Casing	Bronze	Bronze	Bronze	Al. Brz.	
b) Impeller	316 S/S	316 S/S	316 S/S	Al. Brz.	
c) Shaft	316 S/S	316 S/S	316 S/S	S/S	
d) Sleeve	316 S/S	316 S/S	316 S/S	Al. Brz.	
12. RPM	1450	1450	2900	2900	
13. Motor HP	~~15~~ 30	30 ea.	5 ea.	3/4	
14. Insulation	Class B	Class B	Class B	Class B	
15. Enclosure	TEFC	TEFC	TEFC	TEFC	
16. Electrics	3/50/380	3/50/380	3/50/380	3/50/380	
17. Other	Flex. Coupled	Flex. Coupled	Flex. Coupled	Close Coupled Mechanical	

NOTES: Riley-Beaird reserves the right to supply pumps and motors of alternate and equal manufacture.

*Revised in accordance with Riley-Beaird letter dated 26 January 1974
**Refer to BVI letter dated 1 May 1974

BARNEY BEARD inc.
MAXIM EVAPORATORS
Subsidiary of RILEY STOKER CORPORATION
318/868-4441 • Telex 50-7446 • Twx 510-973-4153

DESALINATION PLANT CLARIFICATIONS

1. The Desalination plant offered is to automatically shutdown when the cycle makeup storage tank is full. Upon signal, all pump motors are to be stopped and the instrument air supply interrupted to secure all valves. We point out that the motor controllers are to be purchaser supplied and therefore must be supplied with a suitable contact to receive the signal and stop the pumps.

2. The Maxim 24D-6 Desalinator is to be constructed of 90-10 copper nickel alloy for all surfaces wetted with sea water or brine. All vapor spaces, condenser walls and distillate troughs are to be fabricated of Cor-Ten steel. This type of construction has been standard with Maxim since 1968, and our experience indicates that Cor-Ten steel displays excellent corrosion resistant qualities. Earlier installations show no evidence of corrosion attack, and OSW tests conducted at their Freeport, Texas test facility confirm our statements. Therefore, we offer this construction as an alternate material, as permitted per para. 2E2.2.2 of Specification 6104-M-12B.

3. No manways are to be supplied. The simplified Maxim design requires no internal access, for no maintenance of internals is necessary.

4. Each flash stage is provided with an observation port to view the flashing action of the brine. No gage glasses are provided, for no brine level can be recorded or observed. The flashing device causes a "sheet" of brine to be discharged from the flash device to the exit port or orifice, and therefore no brine level is maintained.

MAXIM EVAPORATORS
318/868-4441 • Telex. 50-7446 • Twx. 510-973-4153

The following is to be supplied as a packaged steam generator:

I. Boiler Equipment
- A) Combustion Control - Programmer and Flame Detector, Electronic type
- B) Burner Motor Starter - Across the line type with overload protection and low voltage release
- C) Ignition Transformer - 10,000 Volt output with two ignition electrodes
- D) Indicator Lights - "Ignition," "Load Demand," "Flame Out" and "Low Water"
- E) Electric Ignition
- F) Stack Thermometer - Dial Type
- G) Insulated and jacketed shell
- H) Access Covers - hinged front and davited rear door
- I) Flame Observation Ports, front and rear
- J) Manual Potentiometer

II. Steam Boiler Trim Only
- A) Dual low water cut-offs
- B) Water Level Control - float operated, integral with water column
- C) Water Column - complete with water gauge glass set, trycocks and blowdown valves
- D) Steam Gauge - with shut-off cock, siphon and drain
- E) Engineer's Test Cock - as required by ASME Code
- F) Feed Piping - (units 100 psi and up) globe and check valve connected in line to internally baffled boiler opening
- G) Safety Valve(s) - ASME National Board approved type

III. No. 2 Oil Fuel Handling Equipment and Associated Controls
- A) Pressuretrols (3) - Modulating, operating/limit and excess limit (steam boilers)
- B) Aquastats (3) - Modulating, operating/limit and excess limit (hot water boilers)
- C) Oil pilot nozzle - holder, tip, and strainer
- D) Oil pilot electric shut-off valve - solenoid operated
- E) Main Oil Nozzle - variable capacity, pressure atomizing
- F) Main Oil electric shut-off valve - solenoid operated
- G) Return oil check valve
- H) Return oil flow regulating valve - variable orifice type
- I) Oil pump - gear type, w/motor base and coupling - shipped loose for field installation
- J) Check Valve - on pump discharge
- K) Oil pressure regulating valve
- L) Suction strainer - self-cleaning type
- M) Modutrol motor w/auxiliary switch and air-fuel linkage
- N) Air Fuel Interlock - air failure safety switch
- O) Oil supply pressure gauge w/isolating valve
- P) Oil return pressure gauge w/isolating valve
- Q) Oil pump motor starter

Riley-Beaird proposes to supply a quantity of one Continental Model F132B400-2 Scotch Marine Type automatic firetube boiler rated for 13,800 steam pounds per hour from and at 212°F utilizing 2,000 square feet heating surface by fireside (ASME) measurement, having 150 PSIG design pressure and being guaranteed a minimum efficiency of 80% with a stack temperature not to exceed 125°F over steam temperature.

This boiler is designed and constructed per ASME Code and bears the Underwriters Laboratories "B" label for completely integrated boiler, burners and controls for firing number 2 fuel oil. Mechanical pressure atomization is utilized at the burners, and full equipment is provided for modulating operation.

In addition to compliance with the afroementioned ASME and Underwriters Laboratories Code requirements, this boiler is constructed in full accordance with National Electric Code, NEMA I, ASTM (only as required by ASME), NFPA, AMBA, FM and NFPA. In exception to your specifications, the unit is not in compliance with EEI and IEE Code requirements.

The unit is of the packaged, factory assembled, bottom supported, multi-pass, fire-tube type with integrally mounted burner, fan, controls and accessories required for a complete unit. Refer to the Scope of Supply attached for a complete enumeration of items included as standard equipment.

The steam generator to be supplied is suitable for outdoor installation in an unprotected location, and is adequately weatherproofed for normal outdoor weather conditions in a relatively temperate climate but is not freeze protected. Weather-proofing includes specific attention to protecting blower motor, oil pump motor, feedwater pump motor and miscellaneous valves as well as under shell painting, NEMA III panel and seal type wiring. In review of the Scope of Supply, please note that we are in exception to your specifications in that we are offering the vendor's standard pressure atomization type burners rather than air atomization burners specified. Regarding your paragraph 2F.8.2, a complete system of flame safety and safety interlock equipment can be furnished, but cannot be provided with our proposal. The same is true of the combustion control system provision in your paragraph 2F.8.3.

As per your paragraph 2F.8.4, we are offering a standard compliment of controls and instrumentation. With regard to annunciators, we call your attention to the fact that the vendor supplies four indicating lights as standard equipment and would have to require that you specify annunciation points required if the vendor's standard is not suitable.

With regard to controls and control circuits, we found what appeared to be a contradiction in your specification with regard to electrical characteristics required. The unit we are offering is complete with control transformer for 115/50/1 control
* circuit and is wired for ~~380~~ 416 volt, 50 Hz, 3 phase electrical service to the control
** panel. Our package does not include a circuit breaker which could be provided by the contractor.

We are offering feedwater control equipment in accordance with your specifications including a feedwater pump, motor tank as described in your paragraphs 2F9.1 and 2F9.2. We are taking exception to your specifications regarding size and type of piping connections, and providing screwed threaded or flange connections wherever applicable to our vendor's standard. We also take exception to your requirement that water and steam valves be forged or cast steel and all steam and water connections be valved. Once again we must restrict our proposal to our vendor's standard equipment.

The boiler proposed should be equipped with all standard safety valves required to meet the requirements of ASME boiler and pressure vessel code as per your requirements, gags for these safety valves are included.

Also included on the unit proposed are a main steam outlet valve (8" - 250# flanged) and a 6" steam stop check non-return outlet valve complete with an 8" x 6" reducer. In exception to your specification no valve drain is provided between the main steam outlet valve and the stop check valve. Both these valves and the reducer are shipped loose for installation by others.

Also provided with this unit are gauge glass assemblies in accordance with the ASME Code, a bottom blow down assembly consisting of two quick opening and one slow opening valve piped into a common discharge, and chain wheel operation shut-off valves with sufficient chain for operation from floor level.

Standard pressure gauges will also be provided.

All motors required for the steam generator auxiliaries will be totally enclosed for outside installation. The steam generator shall be provided with a flanged stack connection, but stack will be provided by others.

We believe the equipment offered will be in compliance with your specification sheets 2F-6 and 2F-7, but page 2F-8 is not applicable due to the fact that pressure atomizing rather than air atomizing burners are offered with this boiler.

Except where otherwise noted, all standard and optional equipment provided with this unit shall be of the standard type provided by Continental Boilers, Inc.

RILEY | RILEY-BEARD, INC.

MAXIM EVAPORATORS

January 26, 1974

Perusahaan Umum Listrik Negara
Jalan Sunan Ngampel 1
Kebajoran, Baru
Jakarta, Indonesia

Attention: Ir Bagoes Moedijantoro

Subject: Proposal, Item 2
Semarang Steam Power Plant
Specifications 6104-M-12B
Maxim Ref. 152-L-491

Gentlemen:

As a result of a preliminary meeting held at the Black and Veatch International Office in Kansas City, we hereby submit the following data and other supporting evidence in order to clarify and otherwise define the scope of our proposal:

1. Flash Evaporator

a) The vapor mesh separator included within the flash evaporator shell is to be monel. Page D-18 of our proposal incorrectly stated the material as stainless steel. Therefore, reference to stainless steel should be deleted and monel metal substituted in accordance with Page 2D-5 of specification 6104-M-12B.

b) The Maxim TCFE design is a horizontal single effect, flash type with integral brine heater and vapor condenser, constructed within a single shell. This design was first supplied to the Town of Hempstead, New York, in 1964 where four (4) individual units were installed, each rated at 40,000 pounds per hour of fresh water. For your information, we enclose photographs of this equipment being off loaded at the site.

Further, the following installations incorporating the TCFE design have been made and are in operation:

Location	Capacity GPH	Delivery Date	A & E Firm
Nuclear Power Station Zorita, Spain	120	1966	Westinghouse Electric Nuclear Equipment Services, Europe
Rochester Gas & Electric Robt. E. Ginna Nuclear Power Plant	120	1968	Westinghouse
NOK, Switzerland Nuclear Power Station (near Zurich)	120	1968	Westinghouse
Consolidated Edison Co. IPP Indian Point #2 Nuclear Power Station	120	1968	Westinghouse
Florida Power & Light Co. Turkey Point Nuclear Power Station	120	1968	Westinghouse
Carolina Power & Light Co. Robinson Nuclear Power Station	120	1968	Westinghouse
Wisconsin Michigan Power Point Beach #1 & 2 Nuclear Power Station	120	1969	Westinghouse
Japan Kansai Elec. Power Nuclear Station #1, Mihama	120	1968	Westinghouse
NKB, Switzerland Nuclear Power Station (near Geneva)	120	1969	Westinghouse
Japan Kansai Elec. Power Nuclear Station #2, Mihama	120	1970	Kansai Elec. Power Co.
Consumers Power Co. Palisades	1200	1972	Bechtel San Francisco
Consumers Power Co. Palisades	1200	1972	Bechtel San Francisco

The following installations incorporating the TCFE design have been made, but to the best of our knowledge, are not in operation pending completion of the facility:

Location	Capacity GPH	Delivery Date	A & E Firm
Baltimore Gas & Elec. Co. Calvert Cliffs Units 1&2	1200	1972	Bechtel Gaithersburg, Md.
Toledo Edison Co. Davis Besse #1	900	1972	Bechtel Gaithersburg, Md.
Toledo Edison Co. Davis Besse #1	900	1972	Bechtel Gaithersburg, Md.
Toledo Edison Co. Davis Besse #1	600	1972	Bechtel Gaithersburg, Md.
Northeast Utilities Millstone Point #2	900	1973	Bechtel Gaithersburg, Md.
Northeast Utilities Millstone Point #2	1500	1973	Bechtel Gaithersburg, Md.
Arkansas Power & Light Arkansas Nuclear One, Unit2	1200	1973	Combustion Engr. Bechtel
Arkansas Power & Light Arkansas Nuclear One, Unit2	1200	1973	Bechtel
Detroit Edison Co. Enrico Fermi #2	1800	1973	Detroit Edison
Detroit Edison Co. Enrico Fermi #2	1800	1973	Detroit Edison
Atomic Energy Commission Livermore Site	120	1973	Rogers Engineering

The unique TCFE design is a flash evaporator with the brine heater located and encased within the flashing device. No boiling occurs within the device, and we include a photo which defines the flashing action of the raw water. Please note that the flashing occurs after the discharge of the brine from the lip and throat of the flash device.

c) The Maxim model 1-TCFE-36 offered does not incorporate a specific and/or separate deaerator. The TCFE flash evaporator is designed to allow the evaporator itself to act as the deaerator. Our experience indicates no adverse or marked difference occurs, and therefore Maxim does not recommend the use or inclusion of this item.

Further, the noncondensible vapors released from the feed water during the preheating and flashing process are evacuated through the generous and oversized vacuum removal system. The design considers complete sweeping of the internal flashing section with special emphasis on the condenser section to insure complete removal of the noncondensibles.

d) Reference was made to the use of the distillate pumps supplied for the desalinator to remove the distillate from the flash evaporator. Consideration should be given to the supply of a separate distillate pump, which can readily be mounted on the flash evaporator foundation, providing a self-contained evaporator package. The location of the distillate terminal connections permits sufficient NPSH for proper operation and would eliminate the long suction piping to utilize the desalinator pumps. For this application, we would offer a Gould model 1 x 2-8 horizontal centrifugal pump with a 2 HP, 2900 RPM, TEFC motor, for 3/50/380 V operation. The pump is rated for 30 GPM and will provide a 18-20 PSI discharge at normal operating condition.

* The additional cost to cover the supply of the pump and motor and all necessary labor and material to mount the pump on our foundation would be $1,270.00. The terminal connection would be the discharge connection of the pump liquid end, and no motor controller is included.

e) With reference to the brine pump, procurement is to be made by the purchaser in accordance with Page 2D-1 of specification 6104-M-12B.

2. <u>Desalination Plant</u>

a) With reference to the control valves to be supplied, the following is submitted:

1. All pneumatic solenoid operated valves are to be ASCO.

2. The three-way solenoid dump valve, installed in the distillate pump discharge, is to be manufactured by R.G. Lawrence. This is a size beyond the normal supply of ASCO and has been used extensively for marine service.

*This pump will be provided by the Contractor and the cost is included in the negotiated contract price

3. The steam control valve installed in the area of terminal "E" is to be Fisher, type 7810 butterfly with positioner, size 6" to fit between two (2) 150 # RF flanges. The actuator is a size 40, type 656, spring to close, air to open. The valve is to be supplied with a carbon steel body and stainless steel disc.

4. The two-way solenoid steam valve in the air ejector supply line, terminal connection "F" is to be a $1\frac{1}{2}$", type 141S46, 2 way solenoid valve as manufactured by Magnatrol Valve Corporation. The valve is to be normally closed with an internal pilot operated piston.

   Maximum fluid temperature - 400°F.

   Maximum static pressure - 200 PSI

   Coil insulation - Class H

   Construction: Valve body - High pressure valve, bronze

   Piston assembly - Stainless steel pilot, connected to a bronze piston

   Solenoid housing - Malleable iron

5. The 6" control valve, to be supplied in the sea water supply line before entry into the mixing and deaeration tank, is to be a 6" - 150 # ASA, figure 7010 diaphragm control valve as manufactured by Atlas Valve Company. The actuator is to be a model 11-120, spring to close, air to open. Refer to Atlas Drawing SA-240-D.

   Construction: Body - Bronze

   Trim - Cage 17-4PH stainless steel

   Diaphragm - Neoprene

   Yoke - Aluminum

   Diaphragm Case - Aluminum

6. The 6" control valve, to be supplied in the brine pump discharge line, is to be a duplicate of Item 5 above.

7. The 2" control valve, located in the distillate pump discharge line before the 3 way solenoid valve, is to be a 2" type 667GS valve as manufactured by Fisher. The actuator is to be a size 30.

   Construction: Body - Bronze

   Trim - Stainless steel with equal percentage plug

8. The sea water feed control valve, located in the discharge of the sea water feed pump, is to be a 6" 150 #, model 2432 with dual range positioner as manufactured by Grinnell. The actuator is to be a model 3250. Refer to Grinnell Bulletin DR-71.

   Construction: Body - Bronze

   Diaphragm - Ethylene propylene rubber

   Bonnet - Iron

* b) In accordance with the specifications, no provisions were included to provide cooling of the condensate drains. In the event that the purchaser and/or BVI requires further cooling of the condensate, a shell and tube heat exchanger, using sea water as a coolant, can readily be included. The addition of the condensate cooler can be accomplished within the desalinator foundation with no increase in overall dimensions. The added cost would be $1,990.00 to provide for the condensate cooler and associated piping within our system.

c) With reference to the condensate drain system, we have reviewed our original recommendation and wish to modify the condensate system as shown on drawing 152-080-E-017. Please refer to drawing SK-L-491 for the revised condensate system and please note that the desuperheater pump is now labeled as a condensate pump. No cost increase or decrease results.

* d) Paragraph ZE2.6 of specification 6104-M-128 states that two distillate and two brine pumps be supplied, and we interpret the intent of the specifications to mean that each pump is to be rated at full capacity. No reference was made to the supply of redundant pumps for any other system, and our proposal was based on the supply of a single pump and motor for the condensate and sea water feed service. In the event that dual pump and motor sets are required for the condensate and sea water supply service, a contract increase of $7,950.00 will result.

*Not applicable to this Contract

* e) Further, no provisions were made within the scope of our supply to furnish isolation valves on the suction and discharge of the brine and distillate pumps. The arrangement shown on our drawing 1S2-080-E-017 will permit operation of either pump, but we point out that the standby pump cannot be removed or isolated while the desalinator is in operation. Considering that the desalinator will be subjected to intermittent service, removal of a pump can be accomplished during down periods and the connections blanked off to allow operation of the desalinator.

In the event that isolation valves are required, which in our opinion is beyond the scope of the specifications, the following contractural cost increases will result, based on the supply of redundant pumps for all services:

Sea water supply pump	$4,280.00
Brine pump	$5,460.00
Distillate pump	$1,260.00
Condensate pump	$ 940.00

f) The added cost to supply the redundant pump and motors and the associated costs to include isolation valves for each pump merits further consideration. We are of the opinion that the intermittent service to which the desalinator will be subjected does not warrant the dual pump feature. It has been our experience that a single pump arrangement will provide the reliability, commensurate with the intended service. Consideration should be given to the supply of single pumps with complete pump and motor spares which would allow replacement during shutdown periods.

* g) 1. Page 2E-2 and Subsection 2E-3 specifies that two chemical feed systems are to be supplied. Our quotation included the acid feed and polyphosphate feed systems in compliance with the specifications. We wish to note that the use of both systems is unnecessary, and based on our experience, we recommend the use of the polyphosphate feed system only.

2. The use of acid is not recommended because:

a) The low temperature operation can effectively be treated with polyphosphates, currently available on the market, to inhibit scale formation.

b) The control of acid feed by pH or metered quantity is unreliable and proven unsuccessful.

*Not applicable to this Contract

c) The storage and handling of concentrated acid provides hazardous exposure to personnel. Accidents resulting in severe burns are common.

d) The use of acid results in extensive internal corrosion of the desalinator. The iron and copper content of the brine blow down of acid fed plants averages .5 to 1 ppm, resulting in accelerated corrosion of the desalinator parent material.

3. We do not have any knowledge of any known MSF installation where the design criteria permits the use of acid and polyphosphate feed. We are aware of one chemical manufacturer that recommends the flushing of the desalinator for eight to ten hours before introducing the polyphosphate feed into a previously acid treated plant.

4. The use of polyphosphate is recommended because:

a) The chemical is available as a dry powder which is nontoxic and safe to handle and readily mixes with fresh water.

b) Polyphosphate feed is readily and accurately controlled.

c) Our experience with MSF desalinators operating on sea water indicates that polyphosphate provides an effective scale inhibitor up to sea water temperatures of 225°F.

d) The brine blow down of a polyphosphate plant will normally contain 0.05 - 0.1 ppm iron and copper content.

5. Therefore, based on our experience and other desalinators in operation on sea water throughout the world, the current trend is to eliminate the use of acid because of the recent advances and development of effective polymers. In consideration of the elimination of the acid feed system and the static mixer, a contract decrease of $2,200.00 can be realized.

h) The Maxim model 24D-6 desalinator is constructed of 90-10 copper nickel alloy for all parts and surfaces, walls, etc., wetted with sea water or brine. Because of the unique Maxim design, all vapor spaces and fresh water collection troughs are constructed of Cor-Ten steel. This construction was reviewed in detail with BVI engineers.

* In the event that all 90-10 copper nickel alloy is required, a contract increase of $15,600.00 will result. Based on our experience, desalinators incorporating Cor-Ten steel have been in service since 1958, and no adverse effects have been noted. The first desalinator of this design, installed in Bermuda, still shows evidence of the original machining marks on the Cor-Ten steel.

*Not applicable to this Contract

Therefore, we are of the opinion that the added cost to provide an all 90-10 copper nickel fabricated plant does not justify the added expenditure.

i) We wish to advise that the sea water feed pump, Goulds model 4 x 6-13, to be supplied and included within our desalinator package, will be furnished with a 30 HP motor. Although this pump was not described in Section 2D, pages D-23 through D-29 inclusive, the motor HP was incorrectly stated in our Technical Data Sheet, line 13. Please delete reference to 15 HP and substitute 30 HP for the feed pump only. No price increase or decrease results.

The brine pumps are correctly stated at 30 HP each.

j) Paragraph 2E1.4 specified that a desalinator panel be provided for installation at the site by the installing activity. For your information, our quote included the panel, but we assumed that installation would be made in close proximity to the desalinator. Currently the location of this panel has not been finalized, and we recommend that the panel be installed adjacent to the desalinator to provide complete control.

The control panel offered included:

1. One Bailey Meter Company, style QAD 331 or equal panel, 90" high x 23" wide x 24" deep with watertight front and back access door. The following equipment is to be located within the panel:

   a) Two (2) Briston instruments; one indicating, one controlling.

   b) Nine (9) sets of start-stop buttons, with "run" indicator lights, Cutlar Hamer E-30 or equal.

   c) Six (6) selector switches for open-close valve functions.

   d) Six (6) indicator lights for "valve open" indication.

   e) One (1) master override switch.

   f) One (1) 6" compound gage.

   g) One (1) main air supply shutoff valve.

   h) Five (5) filter regulators.

   i) Five (5) air block valves.

j) One (1) 40 point electric terminal block.

k) As required - $\frac{1}{4}$" OD copper tubing w/Parker type CDI compression fittings.

l) As required - bulk head tube connectors.

2. The specifications note that shutdown, upon signal, is to be automatic and as required the Maxim model 24D-6 will operate in this mode. The specs further state that startup is to be manual, and the design of the desalinator will allow easy and fast startup, providing instrumentation and motor controls are at the desalinator. Consequently, we are of the opinion that the desalinator control panel should be mounted at the desalinator location. In the event that this is not practical or otherwise possible, manual startup will entail operators to be positioned at the control board and at the desalinator with some sort of intercom to effect startup. It is therefore our recommendation that the control panel be supplied as requrested except that the location be made at the desalinator site.

3. Packaged Steam Generator

a) The packaged steam generator offered as part of our quotation is manufactured by Boiler Engineering and Supply Co., Inc., of Phoenixville, Pa.

b) The boiler offered includes a mechanical pressure atomization fuel system. Although the specifications call for a low pressure air atomizing type burner, the Continental boilers are supplied with mechanical pressure atomizing for all sizes below 600 BHP. This appears to be standardized throughout the industry.

For your information, the mechanical pressure atomization requires a full return line. This is also true of the air atomization system, furnished with larger boilers.

We have checked with the boiler manufacturer and he has advised that air atomization is possible, but the added expense does not warrant consideration. Therefore, exception to the specification was noted to take advantage of the standard designs offered by the industry.

c) Please be advised that the packaged boiler will be supplied as a complete system, including flame safety and safety interlock. Inference is made in our proposal that the flame safety and safety interlock cannot be provided. This statement applies only to drawings and technical data, as requested per para. 2F.8.2. Such data will be supplied after receipt and acceptance of a formal contract.

We thank you for this opportunity to be of assistance and trust that this submittal clarifies our design and proposal. We welcome your further comments and look forward to your early reply.

Very truly yours,

Frank J. Zovambo, Sales Manager
Land Based Desalinators

FJZ:lp

cc: Mr. T. E. Lindemuth - Riley-Beaird, Inc.

RILEY | RILEY-BEARD, INC.

MAXIM EVAPORATORS

February 4, 1974

Perusahaan Umum Listrik Negara
Jalan Sunan Ngampel 1
Kebajoran, Baru
Jakarta, Indonesia

Attention: Ir Bagoes Moedijantoro

Subject: Proposal, Item 2
Semarang Steam Power Plant
Specifications 6104-M-12B
Maxim Ref. 152-L-491

Gentlemen:

Supplementing our letter of January 26, 1974, the following information and other data is submitted to define and otherwise supplement our original offering of December 10, 1973.

1. With reference to page D-18, the following data is to be added:

	Brine Heater	Vapor Condenser
Effective tube surface, sq.ft.	560.9	463.3
Ineffective tube surface, sq.ft.	12.6	16.7

2. Please revise the number of tubes as also indicated on page D-18:

   a) Change "number of tubes" for brine heater from 97 to 193 tubes per pass.

   b) Change "number of tubes" for vapor condenser from 98 to 196 tubes per pass.

3. Refer to page D-31:

   Change "operating speed, RPM" for forced draft fan from 3600 to 3000 RPM.

4. Refer to page D-32:

   Change RPM for motor from 1750 RPM to 1500 RPM.

5. The boiler manufacturer did not include the 600 volt circuit breaker in his
* proposal. In accordance with para. 2F.8.4, page 2F-3, we offer the circuit breaker at $590.00, which is to be included within the packaged steam generator. We point out that two sources of power are required, i.e., the boiler and the condensate receiver system, and the circuit breaker offered above, which applies to the boiler only. In the event that the condensate receiver system is also to be protected, a second circuit breaker would be required, and the same price would apply.

6. At the request of BVI, we hereby offer a degassifier for the flash evaporator
** installation. The degassifier is to be a wooden column type with a forced air supply. The column measures 18" wide x 18" deep and is 16'-0" high with 11'-6" of packing.

The degassifier is designed to handle 35 GPM feed as described per page 2D-3 of the specifications and is capable of reducing the CO_2 content from 500 ppm to 5 ppm at 50°F.

A 1 HP fan, rated at 125 cfm is included with a 1/50/220 V motor.

The contract increase to add the degassifier is $7,000.00.

We point out that the degassifier is to be supplied as a separate item and is to be installed in the feed line upstream from the flash evaporator. No flow controls are included and it would be the responsibility of the purchaser to provide the flow control and/or a level control to avoid flooding and over feeding.

The location of the degassifier is to be made at a level above the flash evaporator to provide a positive head for the feed to the flash desalinator. Pending a review of the available space, it is our opinion that the feed can be made by gravity and vacuum drag without benefit of a feed pump.

The system offered above is designed for the water analysis as shown on page 2D-3 of the specifications and is not intended for alternate sources of feed which may be imposed or beyond the present scope as defined in 6104-M-128.

We point out that the specifications do not specify the use of acid feed and consequently was not offered in our original proposal. This also applies to the degassifier offered herein.

7. For information purposes only, the estimated cost of repair and spare parts to be initially supplied and recommended for a three (3) year period are as follows:

* This circuit breaker will be provided by the Contractor and the cost is included in the negotiated contract price.

** Not applicable to this Contract.

a) Flash Evaporator	$4,500.00
b) Desalinator Plant	$7,500.00
c) Packaged Steam Boiler	$2,000.00

The above are estimated costs and do not include chemicals for operating and cleaning operations. It is our policy to provide a detailed list of recommendes spares before shipment of the equipment and in accordance with the specifications, this list will be provided as part of the operating and technical manuals.

8. * We have been requested to review the terms of payment and consider alternate terms in lieu of those specified per paragraph GC.32.4, page GC-22.

The following alternate terms are acceptable to Riley-Beaird, Inc.:

Payment for the equipment and materials portion of this contract will be made in accordance with the following schedule:

10% of Item 2, para. C-1, as shown on page C-2, and as further modified by equipment additions and/or deletions in the form of a certified check is to be submitted with the purchase order.

90% payment due upon delivery of the equipment to the dock FAS Houston, Texas. If shipment cannot be made due to force majeure conditions, payment will be made against Riley-Beaird, Inc.'s invoice and warehouse receipt.

In the event that storage of the equipment is necessary, all warehouse and storage costs, including insurance; additional transporting costs and handling charges; and any other associated costs are to be borne by the purchaser.

In consideration of the above alternate terms of payment, Riley-Beaird, Inc. offers a maximum reduction of 2% (two percent) applied against the current quoted price of $285,200.00 for Item 2 only, exclusive of any contractural additions. In the event that the final selling price of Item 2 is less than $285,200.00, the 2% reduction applies to the actual price.

9. For information purposes only, and without benefit of any knowledge of the site and local conditions which may apply, we estimate that the field services of our serviceman to supervise the installation would be required as follows:

* Not applicable to this Contract

a) Flash Evaporator	4 - 5 weeks
b) Desalination Plant	6 - 7 weeks
c) Boiler	2 - 3 weeks

The above estimated schedule is based on one man providing the services to supervise the installation and assumes that all materials and local labor are ready and available at the site. The estimate is further based on the installation of the single item only with no consideration to the parallel or concurrent installation of all the equipment.

* 10. We direct your attention to the delivery requirements as specified per paragraph 1A.6, page 1A-3. Our shop loading and scheduling indicated that we could make delivery within the time specified, based on the bid opening date of December 20, 1973, and an award for the equipment being made on or about January 31, 1974.

We appreciate that the bid opening was delayed due to circumstances beyond the control of all parties concerned. Since a delay has been experienced, we have solicited current vendor delivery promises for raw material and long-lead components. We do not anticipate any major or severe problems, but revised delivery promises may influence our ability to hold the March 1975 delivery date. The volatile nature of price and delivery schedules for nonferrous alloy items dictates that we advise that some delivery extension may be necessary to accommodate extensions in lead time that our suppliers and vendors may impose.

We thank you for this opportunity to clarify and otherwise define our proposal, and we trust that this submittal will enable you to evaluate and process our offering. We welcome your further comments and look forward to the receipt of your purchase order.

Very truly yours,

Frank J. Zarambo, Sales Manager
Land Based Desalinators

FJZ:lp

cc: Mr. T. E. Lindemuth, Riley-Beaird, Inc.

*Not applicable to this Contract

RILEY | RILEY-BEARD, INC.

MAXIM EVAPORATORS

February 22, 1974

Perusahaan Umum Listrik Negara
Jalan Sunan Ngampel 1
Kebajoran, Baru
Jakarta, Indonesia

Attention: Ir Bagoes Moedijantoro

Subject: Proposal, Item 2
Semarang Steam Power Plant
Specifications 6104-M-12B
Maxim Ref. 152-L-491

Gentlemen:

With reference to the Desalination plant offered per our quotation dated December 10, 1973, we hereby submit the following data in order to clarify and otherwise define the scope of our proposal:

a) All surfaces of the Desalination plant in contact with sea water or brine are to be 90-10 copper nickel alloy, as noted in our original proposal. For purposes of clarification, the 90-10 copper nickel material meets the specifications of CDA-706 and is further defined by MIL-C-15726 which specifies 1.5 to 3 percent iron content.

b) The after condenser is to be supplied as a separate shell and tube heat exchanger. Our quotation makes reference to the after condenser as an integral section of the sea feed heater. After discussion with Black and Veatch International, we hereby modify our original proposal and offer to supply a separate after condenser. No contract price increase or decrease results.

We thank you for this opportunity to be of assistance and welcome your further reply.

Very truly yours,

Frank J. Zarambo, Sales Manager
Land Based Desalinators

FJZ:lp
cc: T. E. Lindemuth

RILEY | RILEY-BEAIRD, INC.

MAXIM EVAPORATORS

March 22, 1974

Perusahaan Umum Listrik Negara
Jalan Sunan Ngampel 1
Kebajoran, Baru
Jakarta, Indonesia

Attention: Ir Bagoes Moedijantoro

Subject: Item 2 - Terms and Conditions
Semarang Steam Power Plant
BVI 6104-M-12B
Maxim Ref. 152-L-491

Gentlemen:

Our quotation dated December 10, 1974, incorporated our Standard Terms and Conditions, Riley-Beaird, Inc., Form 31673 which conflicts with certain provisions specified in BVI specifications 6104-M-12B. We therefore request that RBI Form 31673 be deleted from our offering, for the applicable terms specified in 6104-M-12B will apply.

We thank you for bringing this to our attention, and we trust that you concur with our action.

Very truly yours,

Frank J. Zarambo, Sales Manager
Land Based Desalinators

FJZ:lp

cc: Mr. T. E. Lindemuth, Riley-Beaird, Inc.

RECEIVED
3:40 pm
MAY 8 1974
BLACK & VEATCH
INTERNATIONAL

[illegible]

[illegible]

[illegible] LOUISIANA MAY 7, 1974
BLACK & VEATCH INT
KANSAS CITY MO
ATTN [illegible] L J [illegible]
RE [illegible] UNITS 1 & 2, SPEC 61M4-4-120, MAY 4 QUOTE MAILED MAY 7, 1974. PLEASE CORRECT PARA. C.2 ITEM 2 TO READ FORTY THOUSAND DOLLARS VICE FORTY FIVE THOUSAND.

C ROSE
RILEY-[illegible], INC.

[illegible]

[illegible]

BEST AVAILABLE COPY

BLACVEATCH KSC

BLAKVINT SWMS
PD KANSAS CITY MO 5-16-74 MP

LLOYD SVOBODA FOLLOWING TELEX RECEIVED BVI FROM RILEY-BEAIRD:

RLYBRD MR SHV
SHREVEPORT LOUISIANA MAY 16,1974
BLACK AND VEATCH INT
KANSAS CITY MO
ATTN L J SVOBODA
RE SAMARANC STEAM POWER PLANT
WE SUPPLEMENT OUR OFFERING DATED MAY 7,1974, WITH THE ADDITION OF THE FOLLOWING ITEM:

WAREHOUSE SPARES PUMP SET CONSISTING OF
ONE FEED PUMP AND MOTOR
ONE BRINE PUMP AND MOTOR
ONE DISTILLATE PUMP AND MOTOR
ONE CONDENSATE PUMP AND MOTOR
FOR DESALINATION PLANT ONLY.
SELLING PRICE FOB SHREVEPORT LA - - - - - $12,650.00

OUR QUOTATIOJTHATED MAY 7, 1974, PAGE 2, PARA D, IS TO BE AMENDED BY DELETION OF THE ABOVE QUOTED ITEM FROM OUR SPARE PARTS COMMENTS.

F J ZARAMBO
RILEY-BEAIRD, INC.

BLAKVINT SWMS
M

BLACVEATCH KSC

BLAKVINT SWMS

RILEY | RILEY-BEAIRD, INC.

May 26, 1974

CHARLES D. ROSE
Division Vice President
Maxim Evaporator Products

Black & Veatch International
P. O. Box 8405
Kansas City, Missouri 64114

Attention: Mr. L. J. Svoboda

Subject: Perusahaan Umum Listrik Negara
Semarang Steam Power Plant, Units 1 and 2
Heat Exchanger Spec 6104-M-12B
BVI Project 6104, File M-12B
Maxim Ref. 152-L-491-A

Gentlemen:

With reference to our quotation 152-L-491-A dated May 7, 1974, the quotation is hereby extended an additional thirty (30) days effective from the date of this letter.

Therefore, please modify para. (b), page 2, as noted under Terms and Conditions, accordingly.

Very truly yours,

Charles D. Rose

CDR:lp

RILEY | RILEY-BEAIRD, INC.

May 30, 1974

CHARLES D. ROSE
Division Vice President
Vacuum Evaporator Products

Black & Veatch International
P. O. Box 8405
Kansas City, Missouri 64114

Attention: Mr. L. J. Svoboda

Subject: Perusahaan Umum Listrik Negara
Semarang Steam Power Plant, Units 1 and 2
Heat Exchanger Spec 6104-M-12B
BVI Project 6104, File M-12B
Maxim Ref. 152-L-491-A

Gentlemen:

With reference to our quotation 152-L-491-A, dated May 7, 1974, we wish to modify para. (a), page 2, relative to shipment date. Please change eighteen (18) months, as originally offered, to seventeen (17) months from contract effective date.

Very truly yours,

Charles D. Rose

CDR:lp

BID BOND

(See Instructions on reverse)

(Must not be later than bid opening date) Dec. 20, 1973

PRINCIPAL (Legal name and business address) (Bidder)

Riley-Beaird, Inc.
P. O. Box 1115
Shreveport, Louisiana 71130

TYPE OF ORGANIZATION ("X" one)

[ ] INDIVIDUAL [ ] PARTNERSHIP [ ] JOINT VENTURE [X] CORPORATION

STATE OF INCORPORATION: Delaware

SURETY(IES) (Name and business address)

The Fidelity and Casualty Company of New York
80 Maiden Lane
New York, New York

PENAL SUM OF BOND					BID IDENTIFICATION	
PERCENT OF BID PRICE	AMOUNT NOT TO EXCEED				BID DATE	INVITATION NO.
	MILLION(S)	THOUSAND(S)	HUNDRED(S)	CENTS	Dec. 20, 1973	
10		28	520	00	FOR (Construction, Supplies or Services)	Semarang Steam Power Plant

KNOW ALL MEN BY THESE PRESENTS, That we, the Principal and Surety(ies) hereto, are firmly bound to Perusahaan Umum Listrik Negara (hereinafter called PLN) in the above penal sum for the payment of which we bind ourselves, our heirs, executors, administrators, and successors, jointly and severally: *Provided*, That, where the Sureties are corporations acting as co-sureties, we, the Sureties, bind ourselves in such sum "jointly and severally" as well as "severally" only for the purpose of allowing a joint action or actions against any or all of us, and for all other purposes each Surety binds itself, jointly and severally with the Principal, for the payment of such sum only as is set forth opposite the name of such Surety, but if no limit of liability is indicated, the limit of liability shall be the full amount of the penal sum.

THE CONDITION OF THIS OBLIGATION IS SUCH, that whereas the Principal has submitted the bid identified above.

NOW, THEREFORE, if the Principal, upon acceptance by PLN of his bid identified above, within the period specified therein for acceptance (sixty (60) days if no period is specified), shall execute such further contractual documents, if any, and give such bond(s) as may be required by the terms of the bid as accepted within the time specified (ten (10) days if no period is specified) after receipt of the forms by him, or in the event of failure so to execute such further contractual documents and give such bonds, if the Principal shall pay PLN for any cost of procuring the work which exceeds the amount of his bid, then the above obligation shall be void and of no effect.

Each Surety executing this instrument hereby agrees that its obligation shall not be impaired by any extension(s) of the time for acceptance of the bid that the Principal may grant to PLN notice of which extension(s) to the Surety(ies) being hereby waived; provided that such waiver of notice shall apply only with respect to extensions aggregating not more than sixty (60) calendar days in addition to the period originally allowed for acceptance of the bid.

IN WITNESS WHEREOF, the Principal and Surety(ies) have executed this bid bond and have affixed their seals on the date set forth above.

PRINCIPAL

Signature(s)	1. C.R. Kierbow (Seal)	2. (Seal)	Corporate Seal
Name(s) & Title(s) (Typed)	1. C. R. Kierbow Vice President, Secretary, Treasurer, Controller	2.	

INDIVIDUAL SURETIES

Signature(s)	1. (Seal)	2. (Seal)
Name(s) (Typed)	1.	2.

CORPORATE SURETY(IES)

SURETY A	Name & Address	The Fidelity and Casualty Company of New York New York, New York	STATE OF INC N. York	LIABILITY LIMIT
	Signature(s)	1.	2.	Corporate Seal
	Name(s) & Title(s) (Typed)	1. Dick Whittington Attorney	2.	

BEST AVAILABLE COPY

	STATE OF INC	LIABILITY LIMIT	Corporate Seal
	STATE OF INC	LIABILITY LIMIT	Corporate Seal
	STATE OF INC	LIABILITY LIMIT	Corporate Seal
	STATE OF INC	LIABILITY LIMIT	Corporate Seal
	STATE OF INC	LIABILITY LIMIT	Corporate Seal
	STATE OF INC	LIABILITY LIMIT	Corporate Seal

INSTRUCTIONS

1. This form is authorized for use whenever a bid guaranty is required in connection with construction work or the furnishing of supplies or services. There shall be no deviation from this form without approval by PLN.

2. The full legal name and business address of the Principal shall be inserted in the space designated "Principal" on the face of this form. The bond shall be signed by an authorized person. Where such person is signing in a representative capacity (e.g., an attorney in fact), but is not a member of the firm, partnership, or joint venture, or an officer of the corporation involved, evidence of his authority must be furnished.

3. The penal sum of the bond may be expressed as a percentage of the bid price if desired. In such cases, a maximum dollar limitation may be stipulated (e.g., 20% of the bid price but the amount not to exceed dollars).

4. (a) Where more than a single corporation surety is involved, their names and addresses (city and State) shall be inserted in the spaces (Surety A, Surety B, etc.) headed "CORPORATE SURETY (IES)", and in the space designated "SURETY (IES)" on the face of this form only the letter identification of the Sureties shall be inserted.

(b) Where individual sureties execute the bond, they shall be two or more responsible persons. A completed Affidavit of Individual Surety, for each individual surety, shall accompany the bond. Such sureties may be required to furnish additional substantiating information concerning their assets and financial capacity as PLN may require.

5. Corporations executing the bond shall affix their corporate seals. Individuals shall execute the bond opposite the word "Seal".

6. The name of each person signing this bid bond should be typed in the space provided.

BEST AVAILABLE COPY

CONTRACT AGREEMENT

THIS CONTRACT AGREEMENT, made and entered into this 10 of 1 JUL, 1974, by and between the PERUSAHAAN UMUM LISTRIK NEGARA, Party of the First Part and hereinafter called "Owner" and RILEY BEAIRD, INC., a Delaware Corporation with its principal office in Shreveport, Louisiana, Party of the Second Part and hereinafter called "Contractor".

WITNESSETH:

THAT WHEREAS, the Owner has caused to be prepared specifications, plans and other contract documents for the work as herein specified; and

WHEREAS, the said Contractor has submitted to the Owner a tender in accordance with the terms of this Contract Agreement; and

WHEREAS, the Owner has determined and declared the aforesaid Contractor has submitted the lowest evaluated proposal for the said work and has duly awarded to the said Contractor a contract therefor, the sum or sums named in the Contractor's Proposal, a copy thereof being attached to and made a part of this Contract Agreement;

NOW, THEREFORE, in consideration of the compensation to be paid to the Contractor and of the mutual agreements herein contained, the parties to these presents have agreed and hereby agree, the Owner for itself and its successors, and the Contractor for itself, himself, or themselves, or its, his or their successors and assigns, or its, his or their executors and administrators, as follows:

ARTICLE I. That the Contractor shall furnish fas U.S.A. port of shipment; furnish ocean freight (including port charges for handling, loading, and unloading), ocean cargo insurance and surcharges and deliver to the Port of Semarang, Indonesia, one desalination plant, one flash evaporator, one package steam generator and associated equipment and materials and spare parts as specified in accordance with the provisions of the contract documents as defined in Article GC.1 of the General Conditions which are attached and made a part hereof, and shall execute and complete all work included in and covered by the Owner's official award of this Contract Agreement to the said Contractor.

ARTICLE II. That the Owner shall pay to the Contractor for furnishing equipment and materials and spare parts designated in the foregoing Article I as embraced in this Contract Agreement, and the Contractor will accept as full compensation therefor, the sum (subject to adjustments as provided by the contract) of THREE HUNDRED TWELVE THOUSAND FIVE HUNDRED DOLLARS ($312,500.00) for the Base Contract Price and the sum of FOURTEEN THOUSAND DOLLARS ($14,000) for spare parts; payment to be made in United States currency in the manner provided in the contract documents attached hereto.

That the Owner shall pay to the Contractor for administrative expenses the sum of ONE HUNDRED FIFTY-NINE THOUSAND NINE HUNDRED EIGHTY-THREE RUPIAHS (Rp 159,983 IND). Administrative expenses shall be paid by the Owner to the Contractor from the budget of Proyek Survey Dan Perencanaan Umum Kelistrikan (S.P.U.K.) Jakarta immediately upon signing of the contract.

ARTICLE III. That the Owner shall pay to the Contractor for furnishing the actual cost of ocean freight (including port charges for handling, loading, and unloading), ocean cargo insurance and surcharges on equipment and materials and spare parts designated in the foregoing Article I from the U.S.A. port of shipment to the Port of Semarang, Indonesia, and the Contractor will accept as full compensation therefor the estimated sum of FORTY THOUSAND DOLLARS ($40,000.00); subject to final adjustment to actual cost at the conclusion of the shipment of all required materials, equipment and spare parts; payment to be made in United States currency in the manner provided in the contract documents attached hereto.

ARTICLE IV. That the Contractor shall furnish technical field services upon request by the Owner and that the Owner shall pay to the Contractor for furnishing such services, and the Contractor will accept as full compensation therefor, payment in accordance with the following schedule:

Per diem rate for each technical field representative based on six 8-hour days per week at the site

TWO HUNDRED TWENTY DOLLARS ($220.00 USA)

Living costs and other expenses in Indonesia for each technical field representative at actual cost but not to exceed the following per diem:

THIRTY-ONE THOUSAND ONE HUNDRED TWENTY-FIVE RUPIAHS (Rp 31,125 IND)

Round-trip economy transportation including living expenses, and expenses incidental to travel, to and from Semarang, Indonesia, at actual cost

The total cost of technical field representatives is estimated to be FIFTEEN THOUSAND DOLLARS ($15,000.00 USA) and ONE MILLION FIVE HUNDRED THOUSAND RUPIAHS (Rp 1,500,000 IND)

ARTICLE V. That time of delivery is of the essence of this Contract Agreement, and that the Contractor shall proceed with the specified work and shall conform to the schedule specified in Section IA of the specifications under the heading SCHEDULE.

ARTICLE VI. That in the event the Contractor shall fail to deliver the specified equipment and materials within the time period stipulated in the foregoing Article V, the Contractor shall be liable to the Owner for the amount of TWO HUNDRED THIRTY DOLLARS ($230.00), as liquidated damages and not as a penalty, for each calendar day of delay in accordance with the provisions of Article GC.34 of the General Conditions; that the total amount of said liquidated damages shall not exceed ten per cent of that portion of the contract price for equipment and materials stated in Article II of this Contract Agreement which comprises the contract price for all of the equipment and materials.

DEPARTEMEN KEUANGAN REPUBLIK INDONESIA
I.A. DIREKTORAT JENDERAL PAJAK
KPPMA [illegible]

[illegible]

Jakarta [illegible]
Tanggal [illegible]

[illegible]	[illegible]	Jumlah bea dan denda materai yang tertutang
Keterangan mengenai denda dengan menyebutkan dasar pengenaannya.	[illegible] Rp.1.[illegible] : Rp.1.[illegible] [illegible] Pokok [illegible] 10/00 = [illegible] Jumlah bea yang dibayar sendiri 10 % Rp.[illegible] -	=Rp.160.000,- =Rp. [illegible] -B-3BL-AN [illegible] 7001602053 [illegible] 160.350.00
HARUS DIBAYAR : 12 Juli 1974.	Jakarta 3 Juli [illegible] 1974. [illegible] Jakarta [illegible]	Jumlah: -Rp.160.350,- (Seratus enam puluh ribu tiga ratus lima puluh rupiah).-

PERHATIAN:
[illegible]

Bentuk [illegible]

PEMBAYARAN:

BEST AVAILABLE COPY

IN WITNESS WHEREOF, the parties hereto have executed this Contract Agreement as of the day and year first above written.

OWNER

PERUSAHAAN UMUM LISTRIK NEGARA

(Seal)

Attest: _____ By: _____

Director for Construction.

CONTRACTOR

RILEY BEAIRD, INC.

(Seal)

Attest: _____ By: _____

Charles D. Rose
Vice President
Maxim Evaporator Division

(PLN 6104)
(DESALINATION EQUIPMENT M-12B)
060274

BASIS OF CONTRACT AWARD

The Contract Award is based on the Specifications and Documents for Heat Exchangers issued 29 October 1973; Addendum 1 dated 14 November 1973; Addendum 2 dated 20 November 1973; Addendum 3 dated 18 December 1973; Black & Veatch International letter dated 1 May 1974; Riley Beaird, Inc. Proposal 152-L-491 of 10 December 1973; Riley Beaird, Inc. revised Proposal 152-L-491-A dated 7 May 1974; Riley Beaird, Inc. supplemental letters dated 26 January 1974, 29 January 1974, 4 February 1974, 22 February 1974, 22 March 1974, 26 May 1974, 30 May 1974; Riley Beaird, Inc. Telexes dated 7 May 1974 and 16 May 1974.

The total contract price shall be established as follows:

C.1 Item 2 Equipment and Materials (Refer to Riley Beaird, Inc. Proposal 152-L-491-A dated 7 May 1974 and Telex dated 16 May 1974)

BASE CONTRACT PRICE	$312,500	
Spare parts (subject to adjustment)	14,000	
Subtotal	$326,500	
Ocean freight, handling and insurance (subject to adjustment)	40,000	
Service Representative	15,000	Rp 1,500,000 IND
Contractor Administrative expenses	-	159,983 IND
TOTAL CONTRACT PRICE	$381,500	Rp 1,659,983 IND

PERFORMANCE BOND

(See Instructions on reverse)

DATE BOND EXECUTED *(Must be same or later than date of contract)*: June 14, 1974

PRINCIPAL *(Legal name and business address)* (Contractor)

Riley Beaird, Inc.
P. O. Box 1115
Shreveport, Louisiana 71130

TYPE OF ORGANIZATION ("X" one)

☐ INDIVIDUAL ☐ PARTNERSHIP
☐ JOINT VENTURE ☒ CORPORATION

STATE OF INCORPORATION: Delaware

SURETY(IES) *(Name(s) and business address(es))*

The Fidelity and Casualty Company of New York
80 Maiden Lane
New York, New York

PENAL SUM OF BOND			
MILLION(S)	THOUSAND(S)	HUNDRED(S)	CENT(S)
	114	500	00

CONTRACT DATE	CONTRACT NO.
June 13, 1974	PLN-6104-M-12B

KNOW ALL MEN BY THESE PRESENTS, That we, the Principal and Surety(ies) hereto, are firmly bound to Perusahaan Umum Listrik Negara (hereinafter called PLN) in the above penal sum for the payment of which we bind ourselves, our heirs, executors, administrators, and successors, jointly and severally: *Provided*, That, where the Sureties are corporations acting as co-sureties, we, the Sureties, bind ourselves in such sum "jointly and severally" as well as "severally" only for the purpose of allowing a joint action or actions against any or all of us, and for all other purposes each Surety binds itself, jointly and severally with the Principal, for the payment of such sum only as is set forth opposite the name of such Surety, but if no limit of liability is indicated, the limit of liability shall be the full amount of the penal sum.

THE CONDITION OF THIS OBLIGATION IS SUCH, that whereas the Principal entered into the contract identified above;

NOW, THEREFORE, if the Principal shall:

Perform and fulfill all the undertakings, covenants, terms, conditions, and agreements of said contract during the original term of said contract and any extensions thereof that may be granted by PLN, with or without notice to the Surety (ies), and during the life of any guaranty required under the contract, and shall also perform and fulfill all the undertakings, covenants, terms, conditions, and agreements of any and all duly authorized modifications of said contract that may hereafter be made, notice of which modifications to the Surety (ies) being hereby waived.

IN WITNESS WHEREOF, the Principal and Surety (ies) have executed this performance bond and have affixed their seals on the date set forth above.

PRINCIPAL			
Signature(s)	1. W. E. Adams (Seal)	2. (Seal)	Corporate Seal
Name(s) & Title(s) (Typed)	1. W. E. Adams President, General Manager	2.	

INDIVIDUAL SURETY(IES)		
Signature(s)	1. (Seal)	2. (Seal)
Name(s) (Typed)	1.	2.

CORPORATE SURETY(IES)					
SURETY A	Name & Address	THE FIDELITY AND CASUALTY COMPANY OF NEW YORK, New York, New York	STATE OF INC. New York	LIABILITY LIMIT	Corporate Seal
	Signature(s)	1. Dick Whittington	2.		
	Name(s) & Title(s) (Typed)	1. Dick Whittington Attorney	2.		

23-105

SURETY B	Name & Address		STATE OF INC	LIABILITY LIMIT	Corporate Seal
	Signature(s)	1	2		
	Name(s) & Title(s) (Typed)	1	2.		
SURETY C	Name & Address		STATE OF INC.	LIABILITY LIMIT	Corporate Seal
	Signature(s)	1	2.		
	Name(s) & Title(s) (Typed)	1	2.		
SURETY D	Name & Address		STATE OF INC.	LIABILITY LIMIT	Corporate Seal
	Signature(s)	1	2.		
	Name(s) & Title(s) (Typed)	1	2		
SURETY E	Name & Address		STATE OF INC.	LIABILITY LIMIT	Corporate Seal
	Signature(s)	1	2.		
	Name(s) & Title(s) (Typed)	1	2		
SURETY F	Name & Address		STATE OF INC.	LIABILITY LIMIT	Corporate Seal
	Signature(s)	1	2.		
	Name(s) & Title(s) (Typed)	1	2		
SURETY G	Name & Address		STATE OF INC.	LIABILITY LIMIT	Corporate Seal
	Signature(s)	1	2.		
	Name(s) & Title(s) (Typed)	1	2		

BOND PREMIUM ▶	RATE PER THOUSAND $	TOTAL $

INSTRUCTIONS

1. This form is authorized for use in connection with contracts for construction work or the furnishing of supplies or services. There shall be no deviation from this form without approval by PLN.

2. The full legal name and business address of the Principal shall be inserted in the space designated "Principal" on the face of this form. The bond shall be signed by an authorized person. Where such person is signing in a representative capacity (e.g., an attorney-in-fact), but is not a member of the firm, partnership, or joint venture, or an officer of the corporation involved, evidence of his authority must be furnished.

3. (a) Corporations executing the bond as sureties must be authorized to act as sureties. Where more than a single corporate surety is involved, their names and addresses (city and state) shall be inserted in the spaces (Surety A, Surety B, etc.) headed "CORPORATE SURETY (IES)", and in the space designated "SURETY (IES)" on the face of this form only the letter identification of the Sureties shall be inserted.

(b) Where individual sureties execute the bond, they shall be two or more responsible persons. A completed Affidavit of Individual Surety, for each individual surety, shall accompany the bond. Such sureties may be required to furnish additional substantiating information concerning their assets and financial capacility as PLN may require.

4. Corporations executing the bond shall affix their corporate seals. Individuals shall execute the bond opposite the word "Seal".

5. The name of each person signing this performance bond should be typed in the space provided.

The Fidelity and Casualty Company of New York

GENERAL POWER OF ATTORNEY

Know all men by these Presents, That THE FIDELITY AND CASUALTY COMPANY **OF NEW YORK has made, constituted and appointed, and by these presents does make, constitute, and appoint**

Dick Whittington of Shreveport, Louisiana

its true and lawful attorney for it and in its name, place, and stead, to execute on behalf of the said Company, as surety, bonds, undertakings and contracts of suretyship to be given to

all obligees

provided that no bond or undertaking or contract of suretyship executed under this authority shall exceed in amount the sum of ONE MILLION ($1,000,000.) DOLLARS.

This Power of Attorney is granted and is signed and sealed by facsimile under and by the authority of the following Resolution adopted by the Board of Directors of THE FIDELITY AND CASUALTY COMPANY OF NEW YORK at a meeting duly called and held on the 16th day of October, 1957, as amended April 20th, 1961:

"RESOLVED, that the Chairman of the Board, the Vice Chairman of the Board, the President, an Executive Vice President or any Vice President of the Company, be, and that each or any of them hereby is, authorized to execute Powers of Attorney qualifying the attorney named in the given Power of Attorney to execute in behalf of THE FIDELITY AND CASUALTY COMPANY OF NEW YORK, bonds, undertakings and all contracts of suretyship; and that any Secretary or any Assistant Secretary be, and that each or any of them hereby is, authorized to attest the execution of any such Power of Attorney and to attach thereto the seal of the Company.

FURTHER RESOLVED, that the signatures of such officers and the seal of the Company may be affixed to any such Power of Attorney or to any certificate relating thereto by facsimile, and any such Power of Attorney or certificate bearing such facsimile signatures or facsimile seal shall be valid and binding upon the Company when so affixed and in the future with respect to any bond, undertaking or contract of suretyship to which it is attached."

In Witness Whereof, THE FIDELITY AND CASUALTY COMPANY OF NEW YORK **has caused its official seal to be hereunto affixed, and these presents to be signed by one of its Vice Presidents and attested by one of its Secretaries this 31st day of March, 1965.**

THE FIDELITY AND CASUALTY COMPANY OF NEW YORK

Attest: By

Edward J. Bernard — Secretary

Carroll R. Young — Vice-President

STATE OF NEW YORK, }
COUNTY OF NEW YORK, } ss.:

On this 31st day of March, 1965, before me personally came Carroll R. Young, to me known, who being by me duly sworn, did depose and say: that he resides in Springfield, in the County of Union, State of New Jersey, at 66 Spring Brook Road; that he is a Vice-President of THE FIDELITY AND CASUALTY COMPANY OF NEW YORK, the corporation described in and which executed the above instrument; that he knows the seal of the said corporation; that the seal affixed to the said instrument is such corporate seal; that it was so affixed by order of the Board of Directors of said corporation and that he signed his name thereto by like order.

Lillian Bryson

LILLIAN BRYSON
Notary Public, State of New York
No. 41-0474650
Qualified in Queens County
Certificate Filed in New York County
Term Expires March 30, 1967

CERTIFICATE

STATE OF NEW YORK, }
COUNTY OF NEW YORK, } ss.:

I, the undersigned, an Assistant Secretary of THE FIDELITY AND CASUALTY COMPANY OF NEW YORK, a New York corporation, DO HEREBY CERTIFY that the foregoing and attached Power of Attorney remains in full force and has not been revoked; and furthermore that the Resolution of the Board of Directors, set forth in the said Power of Attorney, is now in force.

Signed and sealed at the City of New York. Dated the 28th **day of** March, **19** 73.

Eugene P. Dougherty
Assistant Secretary

15 Bond 4315B

GENERAL CONDITIONS

Basis of Contract Award,

* GC.1 CONTRACT DOCUMENTS. It is understood and agreed that the Invitation for Bids, Instructions to Bidders, Proposal, Proposal Data, Contract Agreement, Performance Bond, ~~Payment Bond~~, General Conditions, Specifications, Drawings, Addenda, and Change Orders issued by the Owner or the Engineer, and specifications and engineering data furnished by the Contractor and accepted by the Owner, are each included in this Contract and the work shall be done in accordance therewith.

**

GC.2 DEFINITIONS. Words, phrases, or other expressions used in these contract documents shall have meanings as follows:

1. "Contract" or "contract documents" shall include the items enumerated above under CONTRACT DOCUMENTS.

2. "Owner" or "PLN" shall mean the Perusahaan Umum Listrik Negara, an Agency of the Ministry of Public Works and Power of the Government of the Republic of Indonesia named and designated in the Contract Agreement as "Party of the First Part", acting through its duly authorized agents. All notices, letters, and other communication directed to the Owner shall be addressed and delivered to:

   Director of Construction
   Perusahaan Umum Listrik Negara
   Jalan Sunan Ngampel 1
   Kebajoran Baru
   Jakarta, Indonesia
   Cable address: PLNPST Jakarta Indonesia

3. "Contractor", "Manufacturer", or "Supplier" shall mean the corporation, company, partnership, firm, or individual named and designated in the Contract Agreement as the "Party of the Second Part", who has entered into this Contract for the performance of the work covered thereby, and its, his, or their duly authorized representatives.

4. "Subcontractor" shall mean and refer only to a corporation, partnership, or individual having a direct contract with the Contractor for performing work covered by these contract documents.

5. "Engineer" shall mean the firm of Black & Veatch International, Consulting Engineers, 1500 Meadow Lake Parkway, (mailing address P.O. Box 8405), Kansas City, Missouri 64114, (or P.O. Box 3149 Jakarta, Indonesia) or its duly authorized agents.

*Added for Contract
**Not included in Contract

6. "USA" shall mean the United States of America.

7. "AID" shall mean the United States Government, Department of State, Agency for International Development or any successor agency of the United States Government.

8. "Date of contract", or equivalent words, shall mean the date written in the first paragraph of the Contract Agreement; that is, the date of final signature by PLN.

9. "Contract effective date" shall mean the date when an irrevocable letter of credit is established in a United States of America bank.

10. "Day" or "days", unless herein otherwise expressly defined, shall mean a calendar day or days of 24 hours each.

11. "The work" shall mean the equipment, supplies, materials, labor, and services to be furnished under the contract and the carrying out of all obligations imposed by the contract documents.

12. "Drawings" or "plans" shall mean all (a) drawings furnished by the Owner as a basis for proposals, (b) supplementary drawings furnished by the Owner to clarify and to define in greater detail the intent of the contract drawings and specifications, (c) drawings submitted by the successful bidder with his proposal, provided such drawings are acceptable to the Owner, (d) drawings furnished by the Owner to the Contractor during the progress of the work, and (e) engineering data and drawings submitted by the Contractor during the progress of the work, provided such drawings are acceptable to the Engineer.

13. Whenever in these contract documents the words "as ordered", "as directed", "as required", "as permitted", "as allowed", or words or phrases of like import are used, it shall be understood that the order, direction, requirement, permission, or allowance of the Owner or Engineer is intended only to the extent of judging compliance with the terms of the contract; none of these terms shall imply the Owner or the Engineer has any authority or responsibility for supervision of the Contractor's forces, such supervision and the sole responsibility therefor being strictly reserved for the Contractor.

14. Similarly the words "approved", "reasonable", "suitable", "acceptable", "proper", "satisfactory", or words of like effect and import, unless otherwise particularly specified herein, shall mean approved, reasonable, suitable, acceptable, proper, or satisfactory in the judgment of the Owner or Engineer, to the extent provided in "12" above.

15. Whenever in these contract documents the expression "it is understood and agreed" or an expression of like import is used, such expression means the mutual understanding and agreement of the parties executing the Contract Agreement.

16. "Startup" shall mean the time period required to bring the steam-electric generating unit from an inactive condition, when construction is essentially complete, to the state ready for commercial operation. The startup period shall include preliminary inspection and check-out of equipment and supporting subsystems; trial operation of supporting equipment and subsystems; initial operation of the complete steam-electric generating unit; operation of the complete unit to obtain data, perform calibration and corrective work; shutdown, inspection and adjustment prior to obtaining commercial operating status.

17. "Initial operation" shall mean the first integral operation of the complete steam-electric generating unit with subsystems and supporting equipment in service or available for service.

18. "Commercial operation" shall mean the condition of operation in which the complete steam-electric generating unit is officially declared by the Owner to be available for continuous operation at variable loads up to and including rated capacity.

19. "Official acceptance" shall mean the Owner's written acceptance of all work performed under this Contract.

GC.3 EXECUTION OF CONTRACT. After appropriate AID approval, copies of the contract documents will be prepared by the Engineer. All copies will be submitted to the Contractor and the Contractor shall execute the Contract Agreement, insert executed copies of the required bonds and power of attorney, and submit all copies to the Owner. The date of contract on the contract forms shall be left blank for filling in by the Owner. The certification date on the power of attorney shall also be left blank for filling in by the Owner.

Copies of engineering data, special forms, or other documents furnished by the Contractor, which are required to be incorporated in the contract shall be supplied to the Engineer.

The Owner will execute all copies, and make distribution of one copy each to the Owner, Engineer, Contractor, and Surety.

*Deleted in accordance with Item 19 of Addendum 1

After receipt of the executed contract documents, the Engineer will prepare 17 additional copies of the documents for distribution to the Owner, Engineer, Contractor and AID.

GC.4 LEGAL ADDRESSES. The business address of the Contractor given in the Proposal is hereby designated as the place to which all notices, letters, and other communictions to the Contractor may be mailed or delivered. The address of the Owner appearing in Article GC.2 is hereby designated as the place to which all notices, letters, and other communications to the Owner may be mailed or delivered. The delivery by one party to the other party at an address so designated, or the depositing in any mail box regularly maintained by the post office, of any notice, letter, or other communication addressed to such address, postage prepaid, registered or certified mail, with return receipt requested, shall be deemed sufficient service thereof, and the date of said service shall be the date of such delivery or mailing. Either party may change the said address or addresses at any time by an instrument in writing delivered to the Engineer and to the other party. Nothing herein contained shall be deemed to preclude or render inoperative the service of any notice, letter, or communication upon either party personally.

GC.5 SCOPE AND INTENT OF CONTRACT DOCUMENTS. The specifications and drawings are intended to supplement but not necessarily duplicate each other. Any work exhibited in the one and not in the other shall be executed as if it had been set forth in both, so that the work will be constructed according to the complete design as determined by the Engineer.

Should anything necessary for a clear understanding of the work be omitted from the specifications and drawings, or should the requirements appear to be in conflict, the Contractor shall secure written instructions from the Engineer before proceeding with the work affected thereby. It is understood and agreed that the work shall be performed according to the contract documents.

GC.6 INDEPENDENT CONTRACTOR. The relationship of the Contractor to the Owner shall be that of an independent contractor.

*GC.7 ASSIGNMENT. The Contractor shall not assign the work, or any part thereof, without the previous written consent of the Owner, Engineer, and AID, nor shall he assign, by power of attorney or otherwise, any of the money payable under this Contract unless written consent of the Owner has been obtained. No right under this Contract, nor claim for any money due or to become due hereunder shall be asserted against the Owner, or persons acting for the Owner, by reason of any so-called assignment of this Contract or any part thereof, unless such assignment has been authorized by the written consent of the Owner and AID. In case the Contractor is permitted to assign moneys due or to become due under this Contract, the instrument of assignment shall contain a clause subordinating the claim of the assignee to all prior liens for services rendered or materials supplied for the performance of the work.

*Refer to Item 20 of Addendum 1

* GC.8 ORAL STATEMENTS. It is understood and agreed that the written terms and provisions of this agreement shall supersede all prior statements of representatives of the Owner, and prior statements shall not be effective or be construed as being a part of this Contract.

GC.9 REFERENCE STANDARDS. Reference to the standards of any technical society, organization, or association, or to codes of local or state authorities, shall mean the latest standard, code, specification, or tentative standard adopted and published at the date of taking bids, unless specifically stated otherwise.

GC.10 NO WAIVER OF RIGHTS. Neither the inspection by the Owner or Engineer or any of their officials, employees, or agents, nor any order by the Owner or Engineer for payment of money, or any payment for, or acceptance of, the whole or any part of the work by the Owner or Engineer, nor any extension of time, nor any possession taken by the Owner or its employees shall operate as a waiver of any provision of this Contract, or of any power herein reserved to the Owner, or any right to damages herein provided, nor shall any waiver of any breach in this Contract be held to be a waiver of any other or subsequent breach.

GC.11 AUTHORITY OF THE ENGINEER. To prevent delays and disputes, and to discourage litigation, it is agreed by the parties to this Contract that the Engineer shall determine all questions in relation to the work.

Duties of the Engineer with respect to the work performed under this Contract include, but are not necessarily limited to, the following: interpretation of the specifications and documents; review of engineering data submitted by the Contractor; witnessing tests of equipment and material prior to shipment as required; certification of the delivery of equipment and materials to the plant site; inspection and acceptance or rejection of equipment and materials delivered to the plant site; inspection and acceptance or rejection of equipment and materials during and upon completion of construction at the plant site; assisting the Owner in preparation and issuance of change orders; review of acceptance test procedures, schedules, and results; and final inspection of the completely installed equipment and materials.

If in the opinion of the Contractor a decision made by the Engineer is not in accordance with the meaning and intent of the contract, the Contractor may file with the Engineer, within 30 days after receipt of the decision, a written objection to the decision. Failure to file an objection within the allotted time will be considered acceptance of the Engineer's decision and the decision shall become final and conclusive.

The Engineer's decision and the filing of the written objection thereto shall be a condition precedent to the right to request arbitration or to start action in court.

*Refer to Item 21 of Addendum 1

* ~~At the time of this agreement that there shall be no delay in the [illegible] of the work and the decision of the Engineer as rendered shall be promptly observed.~~

GC.12 ENGINEERING INSPECTION. The Owner may appoint such inspectors as the Owner deems proper to inspect the materials furnished and the work performed for compliance with the drawings and specifications. The Contractor shall furnish all reasonable assistance required by the Engineer, or inspectors, for the proper inspection of the work.

The Contractor shall obey the directions and instructions of the Engineer or inspector when they are consistent with the obligations of this Contract. Should the Contractor object to any order given by any inspector, the Contractor may make written appeal to the Engineer for a decision.

Inspectors and other authorized representatives of the Owner or Engineer
**shall be free at all times to ~~perform~~ perform their duties. Any attempted interference of one of them by the Contractor or his employees shall be sufficient reason, if the Owner so decides, to terminate the contract.

Inspection of the work by the Engineer, or inspectors, will be performed at the factory of the manufacturer prior to shipment of the equipment and materials and at the Owner's plant site following delivery thereto. Procedures whereby the Contractor shall notify the Engineer a reasonable time in advance that the work or any part thereof is ready for inspection shall be established by agreement between the Engineer and the Contractor.

Inspection shall not relieve the Contractor from any obligation to perform the work strictly in accordance with the drawings and specifications. Work not so performed shall be removed and replaced by the Contractor at his own expense.

GC.13 RIGHT OF OWNER TO TERMINATE CONTRACT FOR CAUSE. If the work to be done under this Contract is abandoned by the Contractor; or if this Contract is assigned by him without the written consent of the Owner; or if the Contractor is adjudged bankrupt; or if a general assignment of his assets is made for the benefit of his creditors; or if a receiver is appointed for the
***~~Contractor or any of his property; or if at any time the Engineer certifies in writing to the Owner that the performance of the work under this contract~~
is being unnecessarily delayed, that the Contractor is violating any of the conditions of this Contract, or that he is executing the same in bad faith or otherwise not in accordance with the terms of said contract; or if the work is not substantially completed within the time named for its completion or within the time to which such completion date may be extended; then the Owner may serve written notice upon the Contractor and his surety of the Owner's intention to terminate this Contract. Unless within 30 days after the serving of such notice, a satisfactory arrangement is made for continuance, this Contract shall terminate. In the event of such termination, the surety shall have the right to take over and complete the work, provided

*Deleted per Item 22 of Addendum 1
**Revised per Item 23 of Addendum 1
***Refer to Item 24 of Addendum 1

that if the surety does not commence performance within 60 days, the Owner may take over and prosecute the work to completion, by contract or otherwise. The Contractor and his surety shall be liable to the Owner for all excess cost sustained by the Owner by reason of such prosecution and completion.

GC.14 HINDRANCES AND DELAYS. The Contractor expressly agrees that the period of time named in the Contract Agreement to complete all work includes allowance for all hindrances and delays incident to the work. No claim shall be made by the Contractor for hindrances or delays from any cause during the progress of the work, except as provided under SUSPENSION OF WORK and FORCE MAJEURE.

GC.15 SUSPENSION OF WORK. The Owner reserves the right to suspend and reinstate execution of the whole or any part of the work without invalidating the provisions of the contract. Orders for suspension or reinstatement of work will be issued by the Owner to the Contractor in writing. The time for completion of the work will be extended for a period equal to the time lost by reason of the suspension.

Changes in Contractor's price or delivery schedules which occur during a period of suspension ordered by the Owner shall not affect this Contract except as agreed by the Owner and the Contractor. If the Contractor proposes to apply such changes to this Contract, he shall present his proposal to the Owner in writing. During the 60 day period from and after the receipt by the Owner of such written proposal, the Owner shall be permitted to reinstate the work without change. If the work is not reinstated during this 60 day period, the Owner and the Contractor shall agree upon reasonable and proper changes or the Owner may cancel the unshipped portion of the work.

Changes in delivery schedule shall mean extension of the scheduled time of delivery beyond the number of days of the suspension period.

Any necessary and demonstrable costs incurred by the Contractor as a result of suspension of work will be paid by the Owner, provided such costs are substantiated to the satisfaction of the Owner.

* GC.16 FORCE MAJEURE. Should the Contractor be delayed in the final completion of the work by any cause or causes outside of and beyond the control of the Contractor, such as but not limited to acts of a public enemy, war, blockages, insurrections, riots, epidemics, civil disturbances, strikes, fire, and other causes not within the control of the Contractor, which makes the performance of the contract unfeasible and which by the exercise of due diligence the Contractor in performance of the contract is unable to overcome, then an extension of time sufficient to compensate for the delay, as determined by the Engineer, shall be granted by the Owner, and the Contractor shall not be charged for liquidated damages for such delay; provided, however, that the Contractor shall give the Owner and the Engineer prompt notice in writing of the cause of delay in each case and shall demonstrate that he has used all reasonable means to minimize the delay.

*Refer to Item 25 of Addendum 1

* If any such delay, except for failure to notify agreement as set forth herein, lasts for 60 days, the parties shall immediately consult with one another for the purpose of arranging upon the basis of the bases on which the Contractor shall resume work at the end of the delay. If they do not agree upon a postponement of the performance of the work, which is delayed, then either party may, by written notice, terminate the work which is delayed and in such event the Owner shall pay to the Contractor reasonable and proper cancellation charges as mutually agreed.

GC.17 DELAYED SHIPMENT. The Owner reserves the right to order (by written notice) the Contractor to delay shipment of equipment and materials herein contracted. In the event such a delay is ordered by the Owner the Owner will pay the Contractor reasonable and proper extra charges incurred by the Contractor as a result of the delay. Such extra charges shall include
** storage charges, handling charges, insurance, interest on investment, transportation charges to the storage facility, and preservation during storage. In the event storage is necessary, the Contractor shall be guided by the Owner's instructions in respect to the removal from storage and the arrangements for export shipment in accordance with the terms of the Contract.

GC.18 TERMINATION FOR THE CONVENIENCE OF THE OWNER. The Owner reserves the right to terminate and cancel this Contract in whole or in part at any time by written notice to the Contractor. In the event of such termination, the Contractor agrees to waive any claims for damages including loss of anticipated profits on account thereof. The Owner will pay to the Contractor reasonable and proper cancellation charges which are demonstrable to the satisfaction of the Owner. In the event of such termination, provisions of these contract documents relating to specific warranties and guarantees and to agreements to hold harmless or indemnify the other party to the Contract shall remain in full force and effect to the extent provided therein.

Upon receipt of notice of termination, the Contractor shall discontinue the work on the date and to the extent specified in the notice, make every reasonable effort to procure cancellation of all orders and subcontracts to the extent of their relationship to the work terminated and upon terms satisfactory to the Owner; halt all further purchasing or subcontracting activity applicable to the work terminated; and assist the Owner in maintenance, protection, and disposition of work already acquired by the Owner under this Contract.

GC.19 MODIFICATIONS. The Contractor shall modify the work whenever so ordered by the Owner and such modifications shall not affect the validity of the contract. Modifications may involve increases or decreases in the amount of the work for which appropriate contract price adjustment will be made.

*Refer to Item 25 of Addendum 1
**Deleted per Item 26 of Addendum 1

All modifications shall be made under the authority of duly executed change orders issued and signed by the Owner, approved by AID, and accepted and signed by the Contractor.

If modifications affect the delivery and completion schedule of the work, appropriate adjustments to the schedules will be made as provided for in the article FORCE MAJEURE and this article in these GENERAL CONDITIONS.

GC.19.1 Extra Work. Modifications which increase the amount of the work shall be paid for according to the amount actually done.

*Claims for extra work will not be paid unless and the work covered by such claims was authorized in writing by the Owner ~~or~~ Engineer. The Contractor shall not have the right to prosecute or maintain ~~either~~ an arbitration proceeding or ~~in action in court~~ to recover for extra work unless the claim is based upon a written order from the Owner ~~or~~ Engineer. Payments for and extra work will be based on lump sums plus a percentage allowance as agreed and to by the Owner ~~or~~ Engineer and the Contractor before the extra work is started. The percentage allowance shall include the Contractor's extra profit and extra overhead and, unless otherwise agreed by the Contractor and the Owner ~~or~~ Engineer, the percentage allowance shall be 15 per cent of the total and direct cost.

*For the purpose of determining whether proposed extra work will be authorized, the Contractor shall submit to the Engineer, for approval, a detailed fixed cost proposal for proposed extra work. The proposal shall show itemized quantities and charges for all elements of direct cost and a percentage allowance to cover extra profit and extra overhead. Unless otherwise agreed upon by the Contractor and the Owner ~~or~~ Engineer, the percentage allowance shall be 15 per cent of the total direct cost. and

GC.19.2 Decreased Work. If a modification decreases the amount of work to be done, such decrease shall not constitute the basis for a claim for damages or anticipated profits on work affected by such decrease. The Engineer shall determine on an equitable basis the amount of (a) credit due the Owner for contract work not done as a result of an authorized change, (b) allowance to the Contractor for any actual loss incurred in connection with the purchase, delivery, and subsequent disposal of materials or equipment required for use on the work as planned and which could not be used in any part of the work as actually built, and (c) any other adjustment of the contract amount where the method to be used in making such adjustment is not clearly defined in the contract documents.

GC.20 ARBITRATION. Except as may otherwise be provided in this Contract, any dispute or difference arising under this Contract which cannot be settled by agreement between the parties to the dispute shall be submitted to arbitration in the manner specified herein.

*Revised per Item 27 of Addendum 1

Within 30 days from the date of failure to reach agreement as established by written notice by either party to the dispute to the other, each party to the dispute shall appoint an arbitrator. If the two arbitrators thus appointed fail to agree upon a decision and award within 30 days of the date of appointment of the second arbitrator, they shall select a third arbitrator by agreement. If either party to the dispute fails to appoint an arbitrator within the allotted time, or if the two arbitrators cannot agree upon a third arbitrator within 10 days, then the parties to the dispute, or either of them, shall apply to the Court of Arbitration of the International Chamber of Commerce, 38 Cour Albert Ier, Paris VIII for the appointments which have not been made as stated.

The arbitration proceedings shall be conducted in accordance with the Rules of Conciliation and Arbitration of the International Chamber of Commerce. The decision shall be by majority vote of the arbitrators and shall be final, conclusive, and binding upon the parties thereto. Each party shall bear the cost of its appointed arbitrator. The cost of the third arbitrator if one be appointed, shall be borne by the parties as the arbitrators may determine.

All arbitration proceedings shall be conducted in a location acceptable to both parties to the dispute.

Decision of the arbitrators shall be final and binding on the parties and an action to enforce the decision of the arbitrators may be instituted in any court of competent jurisdiction.

The Contractor shall not cause a delay of the work during any arbitration proceedings, except by agreement with the Owner. It is understood and agreed by the parties to the contract that no requirement or statement herein shall be interpreted as curtailing the power of the Engineer to determine the amount, quality, and acceptability of work and materials.

GC.21 LAWS AND REGULATIONS.

GC.21.1 Non-Indonesian Laws and Regulations. The Contractor shall observe and comply with all applicable ordinances, laws, and regulations in the locality where equipment may be manufactured. The Contractor shall protect and indemnify the Owner and the Owner's officers and agents against any claim or liability arising from or based on violation of such ordinances, regulations, or laws.

GC.21.2 Indonesian Laws and Regulations. If Contractor's personnel are required in Indonesia, the following stipulations shall apply.

The Contractor shall observe, comply with and respect Indonesian laws, rules and regulations and shall not interfere with Indonesian political or religious affairs either directly or indirectly. The Contractor shall comply with such other rules and regulations as the Owner and Engineer may establish from time to time with respect to the construction work and personnel employed by the Contractor.

The Contractor shall, in all dealings with labor in his employ, have due regard to all recognized festival days of rest and religious or other customs.

The Contractor shall not give or barter, or otherwise dispose of, to any person or persons, any arms or ammunition of any kind, or permit or suffer the same as aforesaid.

In the event of any outbreak of illness of an epidemic nature, the Contractor shall comply with and carry out such regulations, orders and requirements as may be made by the Government of Indonesia or the local medical or sanitary authorities, for the purpose of dealing with and overcoming the same.

GC.22 TAXES, PERMITS AND LICENSES.

GC.22.1 Non-Indonesian Taxes, Permits, and Licenses. The Contractor shall pay all sales, use, income and other taxes and duties, tariffs, and imports lawfully assessed against the Owner or the Contractor (excluding the Republic of Indonesia or any political subdivision thereof) in connection with the work included in this Contract. The Contractor shall obtain and pay for all USA or other non-Indonesian licenses, permits, and inspections required for the work including the cost of securing all export licenses and permits for materials, equipment, supplies and personnel exported from the USA or other country to Indonesia.

GC.22.2 Indonesian Taxes, Permits, and Licenses. The Contractor will be exempt from any import duties and charges levied by Indonesian law on the equipment and materials by virtue of the Owner's relevant exemption privileges. The exemption shall also include stamp duties imposed on the Contract. Any Indonesian taxes which the Contractor pays in order to perform the work under this Contract will be for the account of the Owner; however the Contractor shall not pay such taxes without the prior written approval of the Owner.

The Contractor and his non-Indonesian field personnel will be exempt from the payment of Indonesian income taxes on payments received under this Contract and from custom duties, harbor dues and other charges for importation of personal effects.

instruments, tools, machinery, and vehicles required for the performance of the work in Indonesia and imported on the condition that they will be exported at the completion of the work will be exempted from customs duties and other such charges.

GC.23 PATENTS. Royalties and fees for patents covering materials, articles, apparatus, devices, equipment, or processes used in the work, shall be included in the contract amount. The Contractor shall satisfy all demands that may be made at any time for such royalties or fees and he shall be liable for any damages or claims for patent infringements. The Contractor shall, at his own cost and expense, defend all suits or proceedings that may be instituted against the Owner for alleged infringement of any patents involved in the work and, in case of an award of damages, the Contractor shall pay such award. Final payment to the Contractor by the Owner will not be made while any such suit or claim remains unsettled. ~~The Contractor's liability for patent infringement is~~ *~~limited to patents held in the country in which the equipment is manufactured.~~

In the event any apparatus or equipment, or any part thereof furnished by the Contractor, is in such suit or proceedings held to constitute infringement, and its use is enjoined, the Contractor shall, at his option, and at his own expense, either: procure for the Owner the right to continue use of said apparatus, equipment, or part thereof; replace it with noninfringing apparatus or equipment; or modify it so it becomes noninfringing.

GC.24 MATERIALS AND EQUIPMENT. Unless specifically provided otherwise in each case, all materials and equipment furnished for permanent installation in the work shall conform to applicable standard specifications and shall be new, unused, and undamaged when installed or otherwise incorporated in the work. No such material or equipment shall be used by the Contractor for any purpose other than that intended or specified, unless such use is specifically authorized by the Owner in each case.

GC.24.1 Equivalent Materials and Equipment. Whenever a material or article is specified or described by using the name of a proprietary product or the name of a particular manufacturer or vendor, the specific item mentioned shall be understood as establishing the type, function, and quality desired. Other manufacturers' products will be considered provided sufficient information is submitted to allow the Engineer to determine that the products proposed are equivalent to those named.

GC.25 GUARANTEE. The Contractor guarantees that the work herein contracted will be as specified and will be free from defects in design, workmanship, and materials. If within the guarantee period the work fails to meet the

*Deleted per Item 28 of Addendum 1

provisions of this guarantee, the Contractor shall promptly correct any defects, including nonconformance with the specifications, by adjustment, * repair, or replacement of all defective parts or materials. Labor costs involved in carrying out such work shall be borne by the Contractor. The guarantee period shall begin on the date of official acceptance, and shall end 12 months later.

If manufacturer's field representatives are included in the Contract, such supervision shall be furnished by the Contractor without cost for the correction of any defects.

The cost of all materials, parts, labor, transportation, supervision, special tools, and supplies required for replacement or repair of parts and for correction of defects shall be paid by the Contractor or by the surety.

This guarantee shall be extended to cover all repairs and replacements furnished under the guarantee and the period of the guarantee for each such repair or replacement shall be one year from the date of installation thereof.

If within 20 days after the Owner gives the Contractor notice of a defect, the Contractor neglects to make or undertake with due diligence to make the necessary corrections, the Owner is hereby authorized to make the corrections himself or order the work to be done by a third party, and the cost of the corrections shall be paid by the Contractor. The Owner will be permitted to make repairs or replacements on equipment without affecting the guarantee or without prior notice to the Contractor so long as the repairs or replacements involve the correct installation of replacement parts. The Owner shall also be permitted to adjust or test equipment as outlined in instruction manuals provided by the Contractor or as directed by the Contractor's erection or operating superintendent.

In the event of an emergency where, in the judgment of the Owner, delay would cause serious loss or damage, repairs or adjustments may be made by the Owner or a third party chosen by the Owner without advance notice to

*Refer to Item 29 of Addendum 1

the Contractor and the cost of the work shall be paid by the Contractor, or by the surety. In the event such action is taken by the Owner, the Contractor will be notified promptly and shall assist wherever possible in making the necessary corrections.

GC.26 INSURANCE. The Contractor shall secure and maintain insurance of such types and in such amounts as may be necessary to protect himself and the interests of the Owner against all hazards or risks of loss as hereinafter specified. The form and limits of such insurance, together with the underwriter thereof in each case, shall be acceptable to the Owner but regardless of such acceptance it shall be the responsibility of the Contractor to maintain adequate insurance coverage at all times. Failure of the Contractor to maintain adequate coverage shall not relieve him of any contractual responsibility or obligation.

In the event of loss or damage to equipment and materials furnished under this Contract, the Contractor shall file all damage claims and shall be responsible for the replacement or repair of the work insured hereunder. Passage of title shall not relieve the Contractor of responsibility for loss or damage to the work.

The Contractor shall file with the Owner satisfactory certificates, or copies, of the policies providing the specified insurance. Certificates of insurance covering physical loss or damage to equipment and materials shall be submitted at least 60 days before the first shipment of the equipment and materials. A certificate for each of the other insurance policies shall be submitted at least 60 days prior to the arrival of the Contractor's personnel in Indonesia. Each certificate shall state that the Owner will be given 60 days written notice before the change, cancellation, or expiration of the included policies.

The workmen's compensation, automobile liability, and general liability insurance specified shall apply only to field services such as manufacturer's technical direction, field testing, and similar work not included as part of the normal manufacturing process.

GC.26.1 Workmen's Compensation and Employer's Liability. This insurance shall protect the Contractor against all claims under applicable workmen's compensation laws. The Contractor shall also be protected against claims for injury, disease, or death of employees which, for any reason, may not fall within the provisions of a workmen's compensation law. The policy covering workmen within the USA shall include an "all states" endorsement.

The liability limits shall not be less than the following:

Workmen's Compensation	
Employees within the USA	Statutory
Personnel outside the USA who are US citizens, residents of the USA, or hired in the USA	Payments comparable to those provided by the Longshoremen's and Harbor Worker's Act (33 USC 901 et seq)
Other employees	Payments meeting at least the minimum legal requirements applicable by reason of the point of hiring and the site of the work
Employer's Liability (for all employees)	$100,000 each person

GC.26.2 Comprehensive Automobile Liability. This insurance shall be written in comprehensive form and shall protect the Contractor against all claims for injuries to members of the public and damage to property of others arising from the use of motor vehicles, and shall cover operation on or off the site of all motor vehicles licensed for highway use, whether they are owned, nonowned, or hired.

The liability limits per vehicle shall not be less than:

Bodily injury	$50,000 each person $100,000 each occurrence
Property damage	$100,000 each occurrence

GC.26.3 Comprehensive General Liability. This insurance shall be written in comprehensive form and shall protect the Contractor against all claims arising from injuries to members of the public or damage to property of others arising out of any act or omission of the Contractor or his agents, employees, or subcontractors or from strikes, riots, and civil commotions. In addition, this policy shall specifically insure the contractual liability assumed by the Contractor under the article entitled DEFENSE OF SUITS. The Contractor shall notify the Owner of any contractual liability assumed hereunder that is not insurable.

The policy shall insure all of the hazards incident to the work including, but not limited to, the hazards enumerated below whenever such hazards are involved in the Contractor's work:

(1) Premises - Operations

(2) Elevators and hoists

(3) Independent contractors (Contractor's protective liability insurance for protection against suits arising out of negligence of subcontractors.)

(4) Products including completed operations to be in force for one year after official acceptance of the work.

(5) Contractual liability

To the extent that any contractor's work calls for blasting, explosive or underground work, his comprehensive general liability insurance shall be written to eliminate explosion, collapse, and underground damage (XCU) exclusions.

The liability limits shall not be less than:

Bodily injury	$250,000 each person $500,000 each occurrence
Property damage	$500,000 each occurrence $500,000 aggregate

GC.26.4 Installation Floater. This insurance shall protect the Contractor, the Owner, and the Engineer from all insurable risks of physical loss or damage to materials and equipment while the materials and equipment are in transit from the Contractor's factory to the USA port of shipment; during storage and loading for ocean shipment; during unloading and storage at the receiving port; during loading and transit from the receiving port to the construction site; and until the equipment and materials are unloaded at the plant site, inspected, and received into custody of the Owner or his designated installation contractor or until 60 days from unloading at the port of Semarang, whichever shall first occur. It shall be of the "all risks" type, with coverages designed for the circumstances which may occur in the particular work included in this Contract. The coverage shall be for an amount not less than the insurable value of the equipment and materials CI&F at the site.

Installation floater insurance shall provide for losses to be payable to the Contractor, the Owner, and the Engineer as their interests may appear and shall contain a waiver of subrogation rights against the insured parties.

Installation floater insurance shall be coordinated with the ocean cargo insurance specified hereinafter to provide complete coverage of equipment and materials at all times until termination of the coverage as specified above.

Certificates of insurance covering installation floater insurance shall quote the insuring agreement and all exclusions as they appear in the policy; or in lieu of certificates, copies of the complete policy may be submitted.

GC.26.5 Ocean Cargo Insurance. This insurance shall insure and protect the insurable interests of the Contractor and the Owner against all insurable risks of physical loss or damage to equipment and materials while aboard an ocean going vessel in transit to the Owner. This insurance shall be written for all risks including but not limited to war, riot, strike, and civil commotion. Coverage shall be for an amount not less than the cost, insurance, and freight (CI&F) value of the equipment and materials.

In the event the Contractor elects, or is directed by the Owner, to ship equipment and materials by aircraft, insurance providing coverage equivalent to that specified above for ocean cargo shall be provided.

GC.26.6 Other Insurance. The Contractor shall secure and maintain such other insurance coverage as may be required to protect against perils and legal liabilities not covered under the foregoing coverages.

GC.27 TRANSFER OF TITLE. The title of ownership for equipment and material furnished fob port of shipment under this Contract shall be passed to the Owner at the time the equipment and material are actually loaded free on board cargo vessels at the port of shipment. This transfer of title shall not be construed to mean an acceptance of the equipment and materials; the Contractor shall continue to be responsible for the quality and performance of such equipment and materials, and for their compliance with the specifications, until final acceptance of the work and the fulfillment of the guarantee provisions of this Contract.

Transfer of title shall not relieve the Contractor from responsibility for all risk of loss or damage to the equipment and materials as specified under the article INSURANCE in these GENERAL CONDITIONS.

BEST AVAILABLE COPY

GC.28 DEFENSE OF SUITS. In case any action in court is brought against the Owner or Engineer, or any officer or agent of either of them, for the failure, omission, or neglect of the Contractor to perform any of the covenants, acts, matters, or things by this Contract undertaken; or for injury or damage caused by the alleged negligence of the Contractor or his subcontractors or his or their agents, or in connection with any claim based on lawful demands of subcontractors, workmen, material men, or suppliers; the Contractor shall indemnify and save harmless the Owner and the Engineer and their officers and agents, from all losses, damages, costs, expenses, judgments, or decrees arising out of such action.

GC.29 RELEASE OF LIABILITY. Acceptance by the Contractor of the last payment shall be a release to the Owner and every officer and agent thereof, from all claims and liability hereunder for anything done or furnished for, or relating to the work, or for any act or neglect of the Owner or of any person relating to or affecting the work.

The last payment by the Owner to the Contractor shall constitute final acceptance of all work performed under this Contract and shall be a release to the Contractor and his surety from all contractual liabilities and responsibilities to the Owner except those liabilities and responsibilities assumed under the article entitled GUARANTEE in these GENERAL CONDITIONS.

GC.30 CLAIMS FOR LABOR AND MATERIALS. The Contractor shall indemnify and save harmless the Owner from all claims for labor and materials furnished under this Contract. When requested by the Owner, the Contractor shall submit satisfactory evidence that all persons, firms, or corporations who have done work or furnished materials under this Contract, for which the Owner may become legally liable, have been fully paid or satisfactorily secured. In case such evidence is not furnished or is not satisfactory, an amount will be retained from money due the Contractor which in addition to any other sums that may be retained will be sufficient, in the opinion of the Owner, to liquidate all such claims. Such sum will be retained until the claims as aforesaid are fully settled or satisfactorily secured.

GC.31 CONTRACTOR'S PRICE BREAKDOWN. The Contractor shall prepare and submit to the Engineer for approval a breakdown of the contract price according to the system of accounts provided by the Owner. The Contractor's price breakdown shall be submitted to and approved by the Engineer before any payments are made under this Contract. Each invoice submitted for payment shall be prepared in accordance with the price breakdown approved by the Engineer.

The sum of the items listed in the Contractor's price breakdown shall equal the contract lump sum price or prices. Overhead and profit shall not be listed as separate items.

An unbalanced breakdown estimate providing for overpayment of the Contractor on items of work which would be performed first will not be accepted.

GC.32 PAYMENTS. Payment for the work included in this Contract will be made in accordance with the requirements stated herein and the payment rules in Section 6.3 of AID Capital Projects Guidelines "Borrower Procurement of Equipment and Materials" M.O. 1442.3.

GC.32.1 Dollar Payments. The Owner will establish, in favor of the Contractor, an irrevocable Letter of Credit in a USA bank covering the total dollar price of the equipment and materials plus export shipping expenses plus the dollar portion of the services provided by the Contractor in Indonesia if such services are required by this Contract.

In accordance with AID regulations, the Contractor may designate the USA bank to issue the Letter of Credit in his favor, provided that this designation is made prior to approval of the Contract by AID and provided that the contract amount is $25,000 or more. If the Contractor designates a bank other than the bank which the Owner has selected to receive the AID Letter of Commitment, the Contractor shall pay the additional bank charges incurred.

GC.32.1.1 Dollar Payments for Equipment, Materials, Freight, and Insurance. All requests for dollar payment for equipment, materials, freight and insurance, excepting final payment, shall be submitted to the bank holding the Letter of Credit and shall include the following documentation:

a. Completed General Accounting Office Standard Form 1034, "Public Voucher for Purchase and Services Other Than Personal".

b. The Contractor's commercial invoice. Each invoice shall be marked "paid" by the Contractor except for equipment and materials of USA source and origin in which case the bank will certify by endorsement on or attached to the invoice that payment has been made.

c. AID Form 1440-3, Contractor's Certificate and Agreement with the Agency for International Development, Contractor's Invoice and Contract Abstract, executed in accordance with the instructions thereon. The insurer or carrier is not required to execute a copy of this form.

d. The following certification, signed and dated by the Contractor:

> The undersigned certifies that (1) the sales value of the equipment covered by this invoice; plus the value of equipment already delivered; plus the sales value of engineering services, labor, and purchased material for which expenditures have been made; plus the amount expended on account of commitments for equipment remaining to be supplied under the subject contract, are not less than the total payment already received or claimed against this Contract, including payments claimed under this invoice; and (2) it is complying with the terms and conditions of the subject contract.

e. Shipping documentation consisting of:

> Bill of lading or substitute commercially acceptable document such as copy of ocean or charter party bill of lading, arriving bill, or parcel post receipt. The bill of lading must indicate the carrier's statement of charges.
>
> If shipment is from free port or bonded warehouse in Indonesia, a copy of the bill of lading covering shipment from the source to the free port or bonded warehouse and a delivery receipt evidencing release from the free port or bonded warehouse shall be submitted. The date of the delivery receipt will be considered as the shipment date.
>
> If the equipment and materials are procured from sources within AID Geographic Code 941, excluding the USA, and shipment is made on a liner vessel bearing the flag of a country within AID Geographic Code 941, excluding the USA, the bill of lading submitted must contain a certification signed by the carrier that a copy of the carriers applicable freight rate tariff has been filed with the Resources Transportation Division, AID.

The number of copies required of the above documentation will be determined later. The AID Loan Number 497-H-024 shall appear on all documents.

GC.32.1.2 Dollar Payments for Field Services. All requests for payment of the dollar portion of the Contractor's field services in Indonesia shall be submitted to the bank holding the Letter of Credit and shall include the following documentation:

a. Contractor's invoice describing the services performed, identifying the covering contract and the sections thereof which provide for such payment and the terms of payment. The invoice must be accompanied by written approval of the Engineer and Owner consenting to the payment of the invoice.

b. The following certification attached to, or endorsed on, the Contractor's invoice:

> "The undersigned certifies that the costs reimbursable to the Contractor and the amount payable to the Contractor in accordance with the terms of the contract, up to the date of this certificate, are not less than the total payments received or claimed by the Contractor under the contract (including the payment claimed under this invoice), and that the Contractor has fully complied with the terms and conditions of the contract, including the plans and specifications."

c. AID Form 1440-3, Contractor's Certificate and Agreement with the Agency for International Development, Contractor's Invoice and Contract Abstract, executed in accordance with the instructions thereon.

The number of copies required of the above documentation will be determined later. The AID Loan Number 497-H-024 shall appear on all documents.

GC.32.2 Rupiah Payments. If payments in rupiahs for a portion of the work is included in this Contract, requests for payments under the rupiah portion of this Contract shall include the following documentation:

a. The Contractor's invoice. The invoice shall show the
* value of the rupiah portion of the work. The Contractor shall submit on invoice showing the rupiah cost for administrative expenses.

b. The following certification, signed and dated by the Contractor:

> I (we) hereby certify that the equipment and materials invoiced herein or covered by the attached invoice were mined, grown, or produced in _____(eligible source country) and that any produced equipment and materials were manufactured, processed, or assembled into

*Added for Contract

equipment and materials substantially different in basic characteristics or in purpose or utility from any imported components.

I (we) further certify that to the best of my (our) information and belief none of such equipment and materials contain components imported from other than free world (A.I.D. Geographic Code 935) countries.

The number of copies required of the above documentation will be determined later. The AID Loan Number 497-H-024 shall appear on all documents.

* GC.32.3 Local Currency Needs. It is a requirement of AID that all local rupiah costs of the contract be paid in Indonesian Rupiahs. Dollar payments will not be made from the AID loan for that portion of the contract.

** ~~As provided for under the AID/Capital Projects Guidelines MUO/ IAAPLP and MUO/1442/3/~~

Whenever it is necessary for the Contractor, or personnel employed by him, to convert USA Dollars to Indonesian Rupiahs arrangements for such conversion shall be made through the US Disbursing Officer or the AID Jakarta Mission Controller as appropriate or as otherwise directed by the US Disbursing Officer.

** ~~Payments for any Indonesian tax or contribution will not be made from the AID loan.~~

*** GC.32.4 Equipment and Materials Payment Schedule. Payment for the equipment and materials portion of this Contract will be made in accordance with the following schedule:

75% pro rata per shipment due fob ocean vessel. If shipment cannot be made due to force majeure conditions, payment will be made against Contractor's invoice and warehouse receipt.

15% Pro rata per shipment due upon Engineer's and Owner's certification of receipt of shipment at the Owner's plant site, but in no event later than six months after shipment from the factory or storage of the equipment

10% as provided hereinafter under Final Payment

100% of expenses incidental to export of the equipment including insurance, freight, and storage charges will be paid against Contractor's invoice and evidence of export or storage.

*Insert the following for Contract:
GC.32.2.1 Administrative Expenses. One hundred percent (100%) of administrative expenses shall be paid immediately upon signing of the Contract.
**Deleted per Item 30 of Addendum 1
***Revised for Contract as shown on Page GC-22A

* GC.32.4 Equipment and Materials Payment Schedule. Payment for the equipment and materials portion of this Contract will be made in accordance with the following schedule:

a. Equipment and Materials. The payment percentages hereinafter stated apply to the equipment and materials Base Contract price stated in the Basis of Contract Award ($312,500):

75% pro rata per shipment due fob ocean vessel. If shipment cannot be made due to force majeure conditions, payment will be made against Contractor's invoice and warehouse receipt.

15% Pro rata per shipment due upon Engineer's and Owner's certification of receipt of shipment at the Owner's plant site, but in no event later than six months after shipment from the factory or storage of the equipment.

10% as provided hereinafter under Final Payment, Article GC.32.6.

b. Payment for Spare Parts. One hundred percent (100%) due fob maritime port of shipment for shipment of all the spare parts ordered by the Owner.

c. Export Expense. One hundred percent (100%) of documented expenses incidental to export of equipment and spare parts including ocean freight, surcharges, cargo insurance, handling, loading and unloading charges, and storage charges as provided in GC.17, will be paid against Contractor's invoice and evidence of export or storage.

* Revised for Contract

GC.32.5 Field Services Payment Schedule. The Contractor shall prepare and submit requests for payment for the dollar and rupiah portions of the Contract relating to the Contractor's field technical advisers, service and training personnel in Indonesia each month to the Engineer. Upon approval of the request for payment by the Engineer and the Owner, the Owner will pay the rupiah value of the work performed during the preceding month not later than 60 days after receipt of the approved invoice; the invoices for the dollar portion of the work will be returned to the Contractor with the Engineer's and Owner's approval for presentation by the Contractor to the bank holding the Letter of Credit.

Separate requests for payment shall be submitted for the dollar and rupiah portions of the erection work. Payment in dollars will be made against the Letter of Credit. Payment in rupiahs will be made in Indonesia by the Owner.

GC.32.6 Final Payment. Upon official approval and acceptance of the work by the Owner, the Contractor shall prepare and submit to the Engineer, final invoices.

The invoices shall include the 10 per cent retainage of the contract prices for equipment and materials adjusted according to the provisions of this Contract. Subject to the Engineer's approval and certification, such final invoices will be submitted to the Owner within 60 days of the Engineer's receipt thereof; and the Owner will within 60 days after said final invoices are certified forward the final invoices and all other required documentation to the bank holding the Letter of Credit for payment to the Contractor.

Official acceptance will not be made until all work specified in the contract documents has been completed, all required inspections have been made, an acceptable performance test has been completed and the unit has attained commercial operation; however, at the option of the Owner, official acceptance may be made upon the satisfactory completion of an acceptance test performed after initial operation. Final payment will not be made until official acceptance is made by the Owner and all required certifications have been received, and a release of all claims against the Owner has been submitted.

In the event the Owner does not give official approval and acceptance of the work within 36 months after the date the shipment of equipment and materials from the factory was complete because of any cause which is beyond the Contractor's control, the final payment will be made in the manner as stipulated above providing the equipment and materials are in accordance with the specifications as far as can be determined.

GC.53 BEGINNING, PROGRESS, AND TIME OF COMPLETION OF WORK. *[illegible] The rate of progress shall be such that the work will be completed in accordance with the schedule named in the Contract Agreement. The Contractor shall furnish the Engineer a detailed schedule setting forth the procedure he proposes to follow and giving the dates he expects to start and to complete separate portions of the work. If in the opinion of the Engineer proper progress is not being maintained, changes shall be made in the Contractor's operations to assure proper progress.

GC.54 LIQUIDATED DAMAGES. The term "Unit" used hereinafter and in the Contract Agreement shall be understood to mean either Unit 1 or 2 including the specified accessories of either unit of the Semarang Steam Power Plant as applicable; it shall not be construed to mean the individual items of equipment which are furnished under this Contract.

Liquidated damages as specified herein and in the Contract Agreement shall apply to each unit individually, not collectively to both units. The term contract price used in the limitation of the maximum amount of liquidated damages shall be understood to mean the contract price of the equipment for the designated unit, not the aggregate contract price of equipment for both Units 1 and 2, except if an item of equipment is common to both units.

Liquidated damages to certain categories of equipment and materials are not specified in the Contract Agreement on a generating unit basis in which case the liquidated damages will be assessed on the basis specified in the Contract Agreement.

It is understood and agreed that time is of the essence of the contract. Should the Contractor fail to complete delivery of the equipment and materials included in this Contract within the time period or periods stipulated in the Contract Agreement after due allowance for any extensions of time which may be granted under the provisions of these contract documents, the Contractor shall pay to the Owner, as stipulated liquidated damages and not as a penalty, the amount of liquidated damages stated in the Contract Agreement for each day of default. The total amount of liquidated damages assessed for failure to comply with the specified delivery schedule shall not exceed 10 per cent of the contract price for the equipment and materials excluding ocean freight, insurance, and port surcharges, and spare parts. ***

The Owner shall have the right to deduct the liquidated damages from any moneys in its hands or otherwise due, or to become due, to the Contractor, or to sue for and recover compensation for such liquidated damages.

*Refer to Item 31 of Addendum 1
**Deleted for Contract
***Revised for Contract

If the Engineer certifies that the failure to complete the delivery within the time herein agreed upon is directly due, in whole or in part, to inability of the Contractor to clear equipment and materials through Indonesian customs as a result of decision of the Owner in accordance with Article GC.22.2 not to permit the Contractor to pay Indonesian taxes, the Contractor will not be liable for liquidated damages to the extent that such damages are due to such inability to clear customs.

GC.35 AID PROCUREMENT SOURCE AND ORIGIN REQUIREMENTS. The Contractor shall comply with the following AID requirements.

GC.35.1 Geographic Source Provisions. All equipment, materials, and other commodities furnished under this Contract shall have their source and origin from countries designated as eligible in AID Geographic Code 941.

"Origin" shall mean the country in which such equipment or material was mined, grown, or produced through manufacturing, processing, or assembly. "Source" shall mean the country or territory from which such equipment or material is shipped to Indonesia; except that when the equipment or materials are shipped to Indonesia from a free port or bonded warehouse in the form in which received therein, "source" shall mean the country or territory from which the equipment or material was shipped to such free port or bonded warehouse.

A produced commodity shall be deemed of country origin if as a result of manufacturing, processing, or assembly in such country, a commercially recognized new commodity is produced that is substantially different in basic characteristics or in purpose or utility from any of its imported components.

Equipment and materials which are normally imported into Indonesia and stocked therein in the form in which imported to meet a general demand in Indonesia for the item, shall be deemed as being of Indonesian source and origin.

No produced commodity shall be eligible for AID financing if it contains components from a Communist Bloc country. (A country not specified in AID Geographic Code 935).

AID may, from time to time, exercise the foregoing approval rights, or discuss matters related to these rights and the project of which this Contract is part, with the parties jointly or separately, without thereby incurring any responsibility or liability to the parties jointly or to any of them.

Any approval or failure to disapprove by AID of any plan, report, specification, contract, bid document, drawing or other documents shall not bar the Owner or AID from asserting any right or relieve Contractor of any liability which Contractor might otherwise have to the Owner or AID, because of such plan, specification, contract, bid document, drawing or other document, or any performance or failure of performance thereunder, or under any AID Contractor's or supplier's certificate.

GC.38 INELIGIBLE FIRMS. No equipment, material, or service shall be furnished under this Contract by any firm on the list of suspended, debarred, or ineligible firms maintained by AID. No USA firm or any other firm which is more than 50 per cent beneficially owned by a USA firm shall furnish equipment, materials, or services under this Contract if the USA firm is not in compliance with its equal employment opportunity obligations under Executive Order 11246, as amended and orders issued thereunder.

GC.39 COMMUNIST BLOC MATERIALS. No equipment, materials, or services, except ocean freight in connection with equipment and materials which are not AID financed, shall be furnished under this Contract if the source and origin thereof is a Communist Bloc country. A Communist Bloc country is defined as a country excluded from the Free World as specified in AID Geographic Code 935.

GC.40 SHIPPING. Not less than 50 per cent of the gross tonnage of equipment and materials furnished under this Contract shall be transported by privately owned USA flag commercial vessels to the extent that such vessels are available at fair and reasonable rates for USA flag vessels. The Contractor shall furnish documentation regarding the nationality of the vessels used to transport the equipment and materials.

The costs of ocean transportation and related delivery services will not be eligible for AID financing if the shipment is made:

a. On a carrier under the flag of a country not included in AID Geographic Code 941, unless shipment on such carrier has been approved by AID prior to shipment.

b. On a carrier under the flag of the Republic of Indonesia

c. On any carrier designated by written notice to the Owner as ineligible by AID

d. Under any charter covering full or part cargo which has not received prior approval by AID.

e. On any carrier owned, operated, or under the control of any Communist Bloc country.

GC.41 DIVERSION RIGHTS. AID reserves certain diversion and vesting rights to the extent and as provided under the Loan Agreement, Letters of Implementation, and other related documents. These rights may be exercised at the option of AID in the event of default by the Owner of agreements with AID which are not remedied, if an extraordinary situation shall arise which makes it improbable that the purposes of the loan will be attained or that the Owner will be able or willing to perform its obligations under AID agreements, or if disbursement by AID would be unlawful. The diversion and vesting rights include, among others, the provision that AID may direct the transfer of title to AID of goods financed by AID, provided the goods are from a source outside Indonesia, are in deliverable condition, and have not been off-loaded in Indonesia. In the event of exercise of these rights, the Contractor shall abide by the instructions of AID relative thereto.

GC.42 GOVERNMENTAL AUTHORIZATIONS. The Owner will assist the Contractor in obtaining any required authorizations for re-exporting tools, equipment, test equipment, unused materials, and the like, all of which are and remain the property of the Contractor, from Indonesia at the conclusion of the work. The Contractor will be required to re-export all of his equipment from Indonesia at the conclusion of his technical services. Any such materials which are to be retained or sold in Indonesia shall be disposed of in accordance with the regulations of the Government of Indonesia.

The Contractor, pursuant to its agreement to arrange for the USA export shipment on behalf of the Owner, will apply for any required export license. Whoever is the proper party under the applicable regulations shall make prompt application for any preference rating or other USA governmental authorizations which may be required to permit the manufacture of the equipment. The parties shall assist each other in every manner reasonably possible in securing such authorizations as may be required.

GC.43 CUSTOMS CLEARANCE. The Owner will be responsible for Indonesian customs clearance of all equipment and materials furnished under this Contract. Customs clearance will take place at the Port of Semarang, at the

international airport at Jakarta, or other appropriate port. All customs duties, taxes, and license fees necessary for such clearance will be for the account of the Owner.

It is contemplated that large amounts of equipment, materials, supplies, tools, etc. will be loaded overside ship directly onto barges. The Contractor shall furnish to the Owner and Engineer, necessary documentation so that prior arrangements can be made with customs officials for expeditious off loading from ocean going vessels into barges. Where necessary the Owner will arrange for unloading under customs bond to barges in order to facilitate ocean vessel unloading.

Documentation for customs clearance shall be submitted at least three weeks prior to the anticipated arrival of equipment and materials in Indonesia. Ten copies of the following documents shall be submitted to the Owner and two copies shall be submitted to the Engineer:

Bill of Lading
Packing List
Insurance Certificate
Invoice

The above documents shall be prepared in accordance with the applicable requirements of Article GC.32.1.1.

After customs clearance by the Owner and release of the goods by customs officials, the Owner will be responsible for transport from Semarang Harbor by barge, rail or truck to the site.

Tools and equipment for use during construction supervision but which are to remain the property of the Contractor and which are to be re-exported by the Contractor from Indonesia at the conclusion of the work shall be carefully documented and specially listed to facilitate both import and export. The Contractor shall determine prior to shipment the customs regulations applicable to this special case as well as normal import rules and regulations applicable.

GC.44 IMPORTED PERSONNEL. The Contractor shall submit to the Owner data on all personnel he intends to bring into Indonesia for the performance of the work. These data shall include the name and present address of each person, his intended assignment and responsibility in connection with the work, and a concise resume of his experience in the type of work to which he will be assigned. These data shall be submitted not later than 60 days prior to their expected arrival in Indonesia.

The Owner will review the information submitted and advise the Contractor of the suitability of the personnel listed. Any personnel found to be unsatisfactory to the Owner shall be replaced with personnel satisfactory to the Owner. The Owner's approval must be secured prior to withdrawal of any non-Indonesian personnel assigned to the work. Requests for withdrawal shall include the reasons for withdrawal, the duration of the withdrawal, or alternatively, data on the replacement personnel to be imported by the Contractor. If at any time after arrival of non-Indonesian personnel, the Owner shall notify the Contractor that any of them are in the Owner's opinion unsatisfactory, such persons shall be withdrawn and replacements satisfactory to the Owner shall be provided at the Contractor's expense.

Any expenses associated with illness of the Contractor's personnel, including replacement thereof, shall be at the Contractor's expense.

Costs of passports, visas, travel documents, inoculations and other incidental expenses incurred by the Contractor's non-Indonesian employees and their dependents occasioned by travel to and from Indonesia shall be borne by the Contractor.

The Owner will not furnish living quarters for the Contractor's personnel and families. The Contractor's employees may import for their personal use a reasonable quantity of household goods and personal effects. These goods will be exempt from import duties and taxes provided those not consumed are re-exported. The Owner will be the sole judge as to what constitutes a reasonable quantity based upon the rules and regulations of the Government of Indonesia. The non-Indonesian employees may import one automobile per family for their personal use exempt from import duties and taxes provided it is re-exported.

* The contractor and the expatriate personnel of the Contractor shall respect all Indonesian laws, rules, and regulations and shall not interfere with Indonesian political or religious affairs either directly or indirectly and shall comply with such other rules and regulations as the Contractor, Owner or Engineer may establish from time to time with respect to the expatriate personnel employed by the Contractor. The expatriate personnel of the Contractor shall work and live in harmony with their co-workers (both expatriate and Indonesian) employed on the work and at all times conduct themselves in an orderly
* manner. The contractor and its expatriate personnel shall not engage, directly or indirectly, in any other (employment, service, or business whatever, including dealings in real estate) nor shall they take part in local politics.

All expatriate personnel of the Contractor under this Contract shall be citizens or residents of a non-Indonesian Code 941 country, shall remain employees of the Contractor, and shall receive their salaries and allowances

*Revised per Item 32 of Addendum 1

directly from the Contractor. With regard to citizens or residents of the USA, the Contractor agrees not to discriminate against any employee or applicant for employment by reason of race, color, creed, sex or national origin in carrying out this Contract.

GC.45 REPORTING, SHIPPING, AND CLEARING DOCUMENTS. The Contractor shall provide all official forms and documentary information as shall be needed to satisfy the AID Loan.

GC.46 AID APPROVAL. This Contract and any amendment, modification, or assignment thereof shall not be effective unless and until approved by AID. Modifications not approved by AID will not be financed by AID.

GC.47 TERMINATION. Unless otherwise terminated under the provisions of the articles entitled RIGHT OF OWNER TO TERMINATE CONTRACT and TERMINATION FOR THE CONVENIENCE OF THE OWNER, this Contract shall be deemed terminated at the expiration of the guarantee period as provided for under the article entitled GUARANTEE.

GC.48 RELEASE OF INFORMATION. The Contractor shall not communicate or use in advertising, publicity, or sales releases, photographs or other reproductions of the work under this Contract, or descriptions of the size, dimensions, quantity, quality, or other information concerning the work unless prior written permission has been obtained from the Owner.

GC.49 AID GEOGRAPHIC CODES.

GC.49.1 AID Geographic Code 941 - Selected Free World. The United States (001 and 002), and any other independent country in the Free World*, excluding the cooperating country itself and the following:

Algeria	Greece	Netherlands
Andorra	Hong Kong	New Zealand
Australia	Iceland	Norway
Austria	Iraq	Portugal
Belgium	Ireland	Qatar
West Berlin	Israel	San Marino
Canada	Italy	Somali Republic
Cyprus	Japan	South Africa, Rep. of
Denmark	Kuwait	** ~~South Yemen~~ Yemen (Adan)
United Arab Republic (formerly Egypt)	Libya	Southern Rhodesia
	Liechtenstein	Spain
Finland	Luxembourg	Syria
France	Malta	Sweden
Germany, Fed. Rep.	Monaco	Switzerland

* "Free World" excludes communist countries or countries under communist domination, i.e., Union of Soviet Socialist Republics, Eastern Europe, Poland, North Viet Nam, North Korea, Mainland China, and other Chinese Communist-controlled areas, Outer Mongolia and Cuba.

** Revised per Item 33 of Addendum 1

United Arab Emirates
United Kingdom
Vatican City
Yugoslavia

GC.49.2 AID Geographic Code 935 Special Free World. Any area or country in the Free World, including the cooperating country itself.

Countries excluded from the Free World are as follows:

- Cuba
- China (Mainland) and Other Chinese Communist-Controlled Areas, including
  - Manchuria
  - Inner Mongolia
  - Tsinghai Province
  - Sikang Province
  - Sinkiang
  - Tibet
  - The former Kwantung Leased Territory
  - The present Port Arthur Naval Base area
  - Liaoning Province
- Eastern Europe
  - Albania
  - Bulgaria
  - Czechoslovakia
  - East Germany (Soviet Zone of Germany and Soviet Sector of Berlin)
  - Estonia
  - Hungary
  - Latvia
  - Lithuania
  - Romania
- Korea, North
- Outer Mongolia
- Poland
- Union of Soviet Socialist Republics (USSR)
- Viet-Nam (North)

*GC.50 Contractor's Proposal. The conformed documents reflect a negotiated contract between the Owner and the Contractor using as a starting point the specifications and addenda issued by the Owner, and the Contractor's proposals, supplemental letters and telexes as listed in the Basis of Contract Award.

The Contractor's proposals, supplemental letters and telexes as included in this conformed contract document shall be considered to be part of the contract document; however, in cases of any conflicts or inconsistencies with the remainder of the conformed contract document, the intent expressed or implied in the remainder of the conformed contract document shall govern.

PART 1 - GENERAL REQUIREMENTS

TABLE OF CONTENTS

		Page
Section 1A - GENERAL DESCRIPTION AND SCOPE OF THE WORK		1A-1 thru 1A-5
1A.1	General	1A-1
1A.2	Work Included Under These Specifications	1A-1
1A.3	Performance Guarantees	1A-2
1A.4	Miscellaneous Materials and Services	1A-2
1A.5	Work Not Included Under These Specifications	1A-3
1A.6	Schedule	1A-3
1A.7	Contractor's Services	1A-3
1A.8	Training Program	1A-5
Section 1B - GENERAL EQUIPMENT SPECIFICATIONS		1B-1 thru 1B-17
1B.1	General	1B-1
1B.2	Referenced Specifications and Standards	1B-1
1B.3	Quality Assurance	1B-1
1B.4	Factory Assembly	1B-1
1B.5	Packaging	1B-2
1B.6	Protection	1B-2
1B.7	AID Emblem	1B-3
1B.8	Weatherproofing	1B-3
1B.9	Source of Materials and Repair Parts	1B-3
1B.10	Design Coordination	1B-3
1B.11	Correction of Manufacturing Errors	1B-3
1B.12	Equivalent Materials and Equipment	1B-3
1B.13	Tools	1B-4
1B.14	Compressed Air	1B-4
1B.15	Control Power	1B-4
1B.16	Auxiliary Power	1B-5
1B.17	Welding	1B-5
1B.18	Shop Coating	1B-5
1B.19	Alignment and Balance	1B-6
1B.20	Lubrication	1B-6
1B.21	Drive Units	1B-6
1B.22	Shaft Couplings	1B-7
1B.23	Safety Guards	1B-7
1B.24	Equipment Bases	1B-7
1B.25	Instrumentation	1B-7
1B.26	Electrical Accessory Devices	1B-10
1B.27	Nameplates	1B-11
1B.28	Factory Prewired Electronic Systems Cabinets	1B-12
1B.29	AC Motor Starters	1B-12
1B.30	Raceway	1B-12
1B.31	Wiring	1B-13
1B.32	Cable Termination Provisions	1B-15

	Page
Motor Control Center Specification and Data Sheet	1B-16
Shipping Container Identification	1B-17
Section 1C - ENGINEERING DATA	1C-1 thru 1C-6
1C.1 General	1C-1
1C.2 Correspondence	1C-1
1C.3 Motor Information	1C-1
1C.4 Drawings	1C-1
1C.5 Instruction Manuals	1C-4
Motor Information Sheet	1C-6
Typical Equipment Instruction Book Cover	A6104-030273
Section 1D - ELECTRIC MOTORS	1D-1 thru 1D2-2
1D.1 General	1D-1
Subsection	
1D1 - Integral Horsepower AC Motors	1D1-1 thru 1D1-6
1D2 - Fractional Horsepower AC Motors	1D2-1 thru 1D2-2

Section 1A - GENERAL DESCRIPTION AND SCOPE OF THE WORK

1A.1 GENERAL. This section covers the general description, scope of work, and supplementary requirements for equipment, materials, and services included under these specifications.

The equipment furnished under these specifications will be incorporated into a new steam power plant to be constructed on a site near the harbor at Semarang, Indonesia. The plant will have two oil fired steam electric generating units of approximately 50 megawatts capacity each.

1A.2 WORK INCLUDED UNDER THESE SPECIFICATIONS. The work under these specifications shall include furnishing the heat exchangers and auxiliary equipment; delivery of same to Port of Semarang, Indonesia and unloading from transport; providing services and miscellaneous materials; all complete as specified herein and in accordance with the contract documents defined in Article GC.1 of the GENERAL CONDITIONS.

* The equipment and materials furnished under these specifications for each of the new generating units shall include the following major items:

Two low pressure feedwater heaters for each unit

Two high pressure feedwater heaters for each unit

One deaerating heater for each unit

Two auxiliary cooling water heat exchangers for each unit

The equipment and materials furnished under these specifications which are common to both Units 1 and 2 shall include the following:

One flash evaporator

One desalination plant

One package steam generator

The requirements stated below shall apply, as much as feasible, to the equipment furnished under these specifications:

All pumps shall be from the same manufacturer

All motors shall be from the same manufacturer

Equipment requiring lubrication shall be capable of operation using lubricants of the same specification

* Not included in this Contract

Equipment, materials, and accessories furnished shall be delivered to the Port of Semarang, Indonesia and unloaded from the transport, under these specifications. They will be received, transported to the plant site, unloaded, stored, and erected under separate specifications. Unloading from ships and storing at the site will not constitute acceptance.

The Contractor shall provide drawings and engineering data, manufacturer's field services, tools, instruction manuals, miscellaneous materials and services, and shall participate in design conferences, all as specified herein.

1A.3 PERFORMANCE GUARANTEES. The equipment furnished under these specifications will be tested by the Owner after installation to demonstrate its ability to operate satisfactorily under the conditions specified and to fulfill the warranties and guarantees set forth herein.

Specific performance guarantees are specified in the detailed specifications. Should the tests indicate that the equipment fails to meet guaranteed performance, the Contractor shall take immediate steps to correct the deficiencies in accordance with the requirements specified under GUARANTEE in the GENERAL CONDITIONS.

1A.4 MISCELLANEOUS MATERIALS AND SERVICES. Miscellaneous materials and services not otherwise specifically called for shall be furnished by the Contractor in accordance with the following:

All nuts, bolts, and gaskets between components and equipment furnished under these specifications

All piping integral to or between any equipment furnished under these specifications, except as otherwise specified

All necessary connections for the Owner's piping and instruments

One year's supply of all lubricants and greases. Specifications shall be provided for all lubricants required.

All necessary instrument and power and control wiring and raceways integral to any equipment furnished under these specifications. This shall include terminal blocks and internal wiring to these terminal blocks for equipment requiring external connection.

Coupling guards for all exposed shafts and couplings

Leveling blocks, subsoleplates, soleplates, thrust blocks, matching blocks, and shims

Erection drawings, prints, information, instructions, and other data for use by the erection contractor

The use of all special tools required for erection of the equipment that are not included with the maintenance tools, including shipping costs to and from the jobsite

1A.5 WORK NOT INCLUDED UNDER THESE SPECIFICATIONS. The following items of work will be furnished by the Owner:

Transporting from the Port of Semarang, unloading and storing at the plant site, and field erecting all equipment

Foundations, foundation bolts, and sleeves

Field office furnishings, supplies, telephone service, and equipment for the manufacturer's field representatives

Motor controls and starters not otherwise specified to be furnished under these specifications

Grouting materials and placing thereof

Permanent electric wiring to connect equipment terminal boxes to the plant electrical system

Solvents and cleaning materials

Finish painting of all equipment except as specified herein

Operating personnel for startup and tests

** 1A.6 SCHEDULE. The Contractor shall schedule production and shipment
* of the equipment and materials to assure delivery at the Port of Semarang, Indonesia during March 1975.

Within 30 days after the contract award, a shipping schedule for major components shall be submitted by the Contractor for joint acceptance of the Owner and the Engineer.

1A.7 CONTRACTOR'S SERVICES. The services called for in WORK INCLUDED UNDER THESE SPECIFICATIONS shall be in accordance with the following.

** Revised for Contract as follows:
The Contractor shall schedule production and shipment of the equipment and materials to assure shipment fob ocean vessel USA port of export seventeen (17) months after the effective date of Contract and receipt of letter of credit.

* Revised per Item 34 of Addendum 1

1A.7.1 Submittal of Engineering Data. Drawings and other engineering data for the specified equipment and materials are essential to the design and subsequent construction of the entire generating unit. Time is of the essence in completing each phase of the work so that both units can be in commercial operation on the scheduled dates.

The Contractor will be required to submit drawings and engineering data in accordance with the schedule and requirements specified under Section 1C - ENGINEERING DATA, to assure compliance with the overall construction and operating schedule.

1A.7.2 Manufacturer's Technical Field Services. The Contractor shall provide the services of a technical field representative to advise and assist the Owner in the erection of the desalination plant furnished under these specifications, to inspect the equipment after erection, and to advise the Owner's personnel on proper operation of the desalination plant.

Upon request by the Owner, the Contractor shall provide the services of other technical field representatives to advise and assist the Owner in the erection of the equipment and materials furnished under these specifications, to inspect the equipment after erection, and to advise the Owner's personnel on proper operation of the equipment.

The Contractor shall state in his Proposal the costs to the Owner for providing such services. A per diem service cost for each representative, exclusive of living and travel expenses shall be stated based on an 8 hours per day 6 day workweek. The hourly rate for overtime work in excess of 48 hours per week shall also be stated. The per diem rate for service shall apply only during working days at the site and not during the seventh day of the week unless actually engaged in work at the site. The per diem rate will apply while the person is in transit to Indonesia.

The number of days of transportation time for which the per diem service rate will be paid shall be as agreed upon by the Contractor and the Owner based on actual travel time, but shall not exceed three days each way for travel to and from the United States.

Living and transportation expenses within Indonesia will be reimbursed by the Owner in rupiahs at actual cost, but not to exceed the per diem expense rate stated in the Proposal.

Transportation costs to and from Indonesia will be reimbursed at actual cost. Transportation fare shall not exceed economy jet fare by the shortest practical route. Transportation costs shall include passport and visa costs, innoculations required, and living expenses incidental to travel.

1A.7.3 Design Conference. Within 30 days after award of contract the Contractor's design engineer shall attend a design conference at a time and place in the USA mutually agreed upon to discuss matters relative to the execution of this Contract. Additional design conferences shall be held as required thereafter to expedite the work.

1A.7.4 Tools. The Contractor shall furnish and ship with the equipment one set of all special tools required for the erection, dismantling, or maintenance of the equipment as specified in Section 1B of these specifications.

1A.7.5 Instruction Manuals. Instruction manuals shall be furnished in accordance with the requirements stated in Section 1C of these specifications.

1A.8 TRAINING PROGRAM. The Engineer will conduct a training program in the United States for training Owner's supervisory operating personnel for the Semarang Steam Power Plant. If requested by the Engineer, the Contractor, and his manufacturers, shall make their manufacturing facilities available for inspection trips by the Owner's trainees and shall assist in discussing the equipment and its design, operation, and maintenance.

Section 1B - GENERAL EQUIPMENT SPECIFICATIONS

1B.1 GENERAL. These General Equipment Specifications apply in general to all equipment and materials. Certain requirements specified herein will obviously not apply to the particular equipment and materials furnished under these specifications; however, where applicable to a particular item of equipment or material, these requirements shall apply.

These General Equipment Specifications are supplementary to the detailed specifications; if requirements in conflict with the requirements specified herein are specified in the detailed specifications, the detailed specifications shall govern to the extent of such conflict.

1B.2 REFERENCED SPECIFICATIONS AND STANDARDS. The specifications, codes, and standards referenced in these specifications (including addenda, amendments, and errata) shall govern in all cases where references thereto are made. In case of conflict between the referenced specifications, codes, or standards and these specifications, the latter shall govern to the extent of such difference.

The specification, code or standard applied in each case shall be the latest revision adopted and published at the date of taking bids. Any conflict between standards shall be referred to the Engineer who will determine which standard shall govern.

1B.3 QUALITY ASSURANCE. The Contractor shall maintain a quality program that provides that equipment, materials, and services under these specifications whether manufactured or performed within the Contractor's plant or at any other source shall be controlled at all points necessary to assure conformance to contractual requirements. The program shall provide for the prevention and ready detection of discrepancies and for timely and positive corrective action. The Contractor shall make objective evidence of quality conformance readily available to the Owner and the Engineer. Instructions and records for quality assurance shall be controlled.

1B.4 FACTORY ASSEMBLY. Equipment shall be shipped completely factory assembled, except when the physical size, arrangement or configuration of the equipment, or shipping and handling limitations make the shipment of completely assembled equipment impracticable, in which case the equipment shall be assembled and shipped as stated in the Contractor's proposal.

When proposals are submitted without statements describing sectional shipments, it will be understood that no field assembly of the equipment will be required and the Contractor shall be responsible for all cost encountered in the field for assembly of sections, accessories or appurtenances not listed in the Proposal as requiring field assembly.

1B.5 PACKAGING. All equipment and materials shall be suitably coated, wrapped, or covered and boxed or crated for export shipment and to prevent damage or deterioration during handling and storage at the site.

All accessory items shall be shipped with the equipment. Boxes and crates containing accessory items shall be marked so that they are identified with the main equipment. The contents of each box and crate shall be indicated by markings on the exterior.

An itemized list of contents shall be attached to the outside of each box or crate in a weather-resistant envelope. An identical list shall be included inside each box or crate. The lists shall be plainly marked and placed in an accessible location to facilitate receipt and inspection.

Each package or shipping unit shall be clearly marked as indicated on the sheet entitled "SHIPPING CONTAINER IDENTIFICATION" included at the end of this section.

Packaging or shipping units shall be designed within the limitations of the unloading facilities of the receiving ports and the ship which will be used for transport. Ships with special heavy capacity unloading rigging may be required for large units of equipment. It shall be the Contractor's responsibility to investigate these limitations and to provide suitable packaging and shipping to permit unloading at Jakarta or the Port of Semarang. "On deck" shipment will not be permitted unless prior approval has been obtained from the Engineer.

Electrical equipment, controls and insulations shall be protected against moisture and water damage. All external gasket surfaces and flange faces, couplings, motor pump shafts, bearings and like items shall be thoroughly cleaned, and coated with rust preventive compound as specified above, and protected with suitable wood, metal or other substantial type covering to insure their full protection.

1B.6 PROTECTION. Coated surfaces shall be protected against impact, abrasion, discoloration, and other damage. Surfaces which are damaged shall be repaired.

All exposed threaded parts shall be greased and protected with metallic or other substantial type protectors. All female threaded openings shall be closed with forged steel plugs. All piping, tubing, and conduit equipment connections shall be sealed with metallic or other rough usage covers and taped to seal the interior of the equipment piping, tubing, or conduit.

Provisions shall be made to ensure that water does not enter any equipment during shipment or in storage at the plant site.

Returnable containers and special shipping devices shall be returned by the manufacturer's field representative at the Contractor's expense.

1B.7 AID EMBLEM. All shipping containers shall carry the official AID clasped hands emblem. The emblem affixed to each shipping container shall be affixed in such a manner which assures that the emblem will remain legible until the shipment reaches the consignee. Size of the emblem in every case shall be large enough to be clearly visible at a reasonable distance. A list of emblem suppliers is available from AID.

The official AID clasped hands emblem shall be prominently displayed on all ships during loading and unloading when their cargo consists entirely of AID financed goods. Ship charterers shall include instructions relative to display of the emblem in the charter party agreements.

1B.8 WEATHERPROOFING. All outdoor equipment and all appurtenances shall be designed for satisfactory operation during 60 mile per hour wind and driving rain. All exposed unpainted parts shall be fabricated of corrosion resisting metal. All ventilating openings shall be louvered on outdoor equipment to prevent entrance of rain under weather conditions described above. All ventilating openings on outdoor equipment shall be equipped with fine mesh monel filters and stainless steel bug screens.

1B.9 SOURCE OF MATERIALS AND REPAIR PARTS. Equipment and accessories furnished shall be from a reputable manufacturer currently engaged in production of such materials.

Individual parts shall be manufactured to standard sizes and gages so that repair parts, furnished at any time, can be installed in the field.

1B.10 DESIGN COORDINATION. The Contractor shall be responsible for the selection and design of equipment and materials which will provide the best coordinated performance of the entire system. Components of rotating equipment shall be selected so that the natural frequency of the complete unit is not at or critically near the operating range of the unit.

1B.11 CORRECTION OF MANUFACTURING ERRORS. Equipment and materials shall be complete in all respects within the limits herein outlined. All manufacturing errors or omissions required to be corrected in the field shall be done by the manufacturer or his duly authorized representative at the Contractor's expense.

1B.12 EQUIVALENT MATERIALS AND EQUIPMENT. Whenever a material or article is specified or described by using the name of a proprietary product or the name of a particular manufacturer or vendor, the specific item mentioned shall be understood as establishing the type, function, and quality desired.

Other manufacturers' products will be considered provided sufficient information is submitted to allow the Engineer to determine that the products proposed are equivalent to those named.

1B.13 TOOLS. The Contractor shall furnish and ship with the equipment one set of all special tools required for the erection, dismantling, or maintenance of the equipment. The tools shall be shipped in separate heavily constructed wooden boxes provided with hinged covers and padlock hasps.

Maintenance tools shall be boxed separately and the boxes shall be marked as indicated on the sheet entitled "SHIPPING CONTAINER IDENTIFICATION".

Whenever possible, boxes containing tools shall be packed into larger containers with the equipment.

A weatherproofed itemized list of the contents shall also be indicated on the outside of each box.

The maintenance tools shall include all special handling rigs, bars, slings, and cable. All tools shall be in new and unused condition.

1B.14 COMPRESSED AIR. Filtered, dried, oil-free compressed air will be supplied for operation of pneumatic instruments and control valves. Normal house service air will be supplied for operation of other pneumatic devices. The compressed air will be supplied at receiver pressure varying from 70 to 100 psi.

Pressure regulators shall be provided for pneumatic devices which operate at pressure levels other than receiver pressure. Pressure regulators shall be Fisher Controls Co. Model 67 FR with pressure gage, or acceptable equal.

1B.15 CONTROL POWER. Electrical power for control and instrumentation will be a nominal 240 volt, single phase, 50 hertz, alternating current, or a nominal 250 volt direct current. The Contractor shall provide any devices required for proper operation and protection of the equipment during electrical power supply fluctuations described in the following paragraphs.

All dc electrical control and instrumentation devices shall be designed for continuous operation on an ungrounded station battery which will float on trickle charge at 258 volts. The Contractor shall guarantee satisfactory operation when the equipment is continuously energized at any voltage from 200 to 280 volts dc, with ambient temperatures as specified. Electrical devices served from this supply shall not impose any ground connections on it.

All alternating current control and instrumentation devices shall, unless otherwise specified, be designed for operation on a nominal 240 volt, 50 hertz, single phase, alternating current system. The Contractor shall guarantee satisfactory operation when the equipment is continuously energized at any voltage from 190 to 250 volts alternating current. Equipment required for operation at other nominal voltages shall be guaranteed to operate satisfactorily over proportional voltage variations. The dropout voltage shall be less than 140 volts for relays and 175 volts for contactors and starters.

All alternating current and direct current devices shall be guaranteed to operate satisfactorily under voltage conditions specified in the above
* paragraphs and at a range of ambient temperatures from 50 C to -30 C. up to 50 C.

1B.16 AUXILIARY POWER. Auxiliary equipment, such as motors, transformers, and rectifiers, requiring electrical power shall be designed to operate from one of the nominal electrical power sources as follows:

Volts	Phase	Hertz
4160	3	50
416	3	50
240	1	50
250	DC	--

Preferred ac motor ratings shall be in accordance with the following schedule:

Horsepower	Volts	Phase
Below 3/4	220	1
3/4 to 250	380	3
250 and above	4000	3

Emergency motors shall be designed to operate on nominal 250 volts dc with voltage variations as described for dc control power.

Variations from preferred motor design voltages must be acceptable to the Engineer.

1B.17 WELDING. If the manufacturer has special requirements relating to the welding procedures for welds at the terminals of the equipment to be performed under separate specifications, the requirements shall be submitted to the Engineer in advance of all erection work.

1B.18 SHOP COATING. All metallic surfaces subject to corrosion shall be protected by suitable coatings applied in the shop. Surfaces which will be inaccessible after assembly shall be protected for the life of the equipment. The surfaces shall be cleaned and prepared in the shop. All mill scale, oxides, and other coatings shall be removed. Sand or grit blasting of internal areas which will be exposed to steam or treated feedwater will not be allowed. Exposed surfaces shall be finished smooth, thoroughly cleaned, and filled as necessary to provide a smooth uniform base for painting. Surfaces to be finish painted after installation, or requiring paint for corrosion protection until installation, shall be shop painted with one or more coats of primer as hereinafter specified.

1B.18.1 Painting. Transformers, switchgear, and other electrical equipment shall be shop finished with one or more coats of primer and two coats of high grade oil resistant enamel. The finish colors shall be manufac-

*Revised per Item 35 of Addendum 1

turer's standards, to be selected specifically by the Owner at a later date. The interior of all panels and switchgear shall be finished with gloss white enamel. A sufficient quantity of paint in each color shall be furnished to provide one complete coat for touchup.

Shop primer for steel and iron surfaces shall be Koppers "622 Rust Penetrating Primer", Mobil "13-R-50 Chromox QD Primer", or Tnemec "77 Chem-Prime" unless otherwise specified.

1B.18.2 Preservative Coatings. Ferrous surfaces which should not be painted shall be coated with rust preventive compound, Houghton "Rust Veto 334" or Rust-Oleum "R-9".

1B.18.3 Galvanizing. When so specified in the detailed specifications, structural steel members and bolts shall be galvanized. After all cutting, punching, reaming, drilling, and capping have been completed, structural steel members shall be "pickled" in accordance with the latest accepted practice, to remove all scale, rust, grease, and other impurities and then hot-dip galvanized in accordance with ASTM A123.

When specified to be galvanized in the detailed specifications, erection and structural bolts shall be galvanized in accordance with ASTM A394 for galvanized steel transmission tower bolts.

1B.19 ALIGNMENT AND BALANCE. All rotating parts shall be true and dynamically balanced. Excessive noise or vibration will be sufficient cause for rejection of the equipment. All rotating equipment shall be balanced at the factory.

1B.20 LUBRICATION. Equipment shall be lubricated by systems designed for continuous operation. Lubrication systems shall not waste lubricants and shall not require attention during startup and shutdown, or more frequently than once weekly. If pressure greasing of the equipment is required, the Contractor shall furnish grease guns for the Owner's use in maintenance.

Oil lubricant level indicators shall be furnished and marked to indicate proper levels under both standstill and operating conditions.

1B.21 DRIVE UNITS. Speed changing equipment furnished as a part of the equipment specified shall conform to the requirements herein.

The nominal horsepower rating of each drive unit shall be at least equal to the theoretical brake horsepower required to drive the equipment under full load, including all losses in speed reducers and power transmission.

The nominal input horsepower rating of each gear or speed reducer shall be at least equal to the nominal output horsepower of the drive motor or to the maximum power requirement for the driven equipment under the design conditions specified, whichever is greater.

Drive units shall be designed for continous service and shall include provisions which will prevent oil leakage around shafts.

1B.22 SHAFT COUPLINGS. Shaft couplings shall be used between all drives and driven equipment. Couplings shall be attached to driver and driven shafts by press fits and keys.

Shaft couplings shall be sized to transmit the maximum brake horsepower requirements of the driven equipment with a service factor of not less than 2.

Couplings shall be of the all metal lubricated gear flexible type, Koppers "Fast" or acceptable equal.

On applications where the motor is furnished under separate specifications, the motor half coupling shall be machined to the motor shaft dimensions on the motor drawing reviewed by the Engineer, and shipped to the motor supplier for shop mounting. The responsibility for proper fit of the coupling halves shall rest with the Contractor.

1B.23 SAFETY GUARDS. Guards shall be provided for protection of personnel from all exposed moving and/or rotating machine elements.

Each guard shall be fabricated from ASTM A36 steel plate having a minimum thickness of 3/16 inch and designed for easy installation and removal. Necessary supports and accessories shall be furnished with each guard.

Guards for outdoor installation shall be galvanized.

1B.23.1 Horizontal Shaft Equipment. Safety guards for horizontal shafts, shaft couplings, belt sheaves, etc. shall be of the inverted "U" design with sides extending to the equipment base or base plate.

1B.23.2 Vertical Shaft Equipment. Safety guards for vertical shafts, shaft couplings, etc. shall be of 360 degree construction with bolted vertical joints. Hinged sections shall be provided for inspection of couplings and glands.

1B.24 EQUIPMENT BASES. A cast iron or welded steel base plate shall be provided for all rotating equipment which is to be installed on a concrete base. Each base plate shall support the unit and its drive assembly, shall be of a neat design with pads for anchoring the units, shall have a raised lip all around, and shall have a threaded drain connection.

1B.25 INSTRUMENTATION. Accessory instrumentation components furnished with the equipment shall be in accordance with the requirements stated herein unless otherwise specified in the detail specifications. The devices specified shall be of the manufacture and model number herein specified, or an acceptable equal.

These devices shall be constructed in accordance with the latest applicable requirements of ANSI, ISA, and NEMA.

Permanently affixed, stainless steel tags stamped with the Engineer's tag number and a description of its use shall be furnished on all pressure switches, level switches, temperature switches, temperature elements, and solenoid valves.

*Unless otherwise specified, all pressure instruments shall have metric and English scales and all temperature instruments shall have metric scales. Pressure instruments shall have scales in kilograms per square centimeter and in pounds per square inch. Temperature instruments shall have scales in degrees centigrade.

1B.25.1 Limit Switches. Limit switches, except those integrally mounted on motor operated valves, shall be selected from the following alternates:

(a) National Acme Company "Snaplock" Series SL. Switches shall have not less than two dpdt switch elements.

(b) Honeywell "Microswitch" DTF2-2RN, or variation thereof, with two dpdt switch elements

Limit switches shall be constructed to withstand the temperatures encountered in the actual service. Explosionproof construction shall be furnished where required by applicable code or the detailed specifications.

1B.25.2 Pressure Switches. Pressure switches shall be selected as follows:

(a) Static switches shall be Static "O" Ring.

(b) Differential pressure switches for low range application shall be manufactured by FW Dwyer.

(c) Differential pressure applications requiring both indication and pressure switch contacts shall be implemented with equipment manufactured by Barton Instrument Corporation regardless of the range.

Pressure switches shall be furnished in explosionproof construction where required by applicable code or the detailed specifications. Each pressure switch shall be specifically selected for the service in which it is used. The acceptability of each switch with respect to range, overpressure capability, capability, repeatability, and deadband shall be demonstrated to the Engineer.

1B.25.3 Temperature Switches. Temperature switches shall each consist of a thermocouple as described under "Temperature Detectors" and an electronic instrument. Electronic instruments shall be Rochester Instrument Systems, Inc., Series ET-205, complete with dual, double-pole, double-throw relays wired to terminals. Each of the two electronic instrument

*Refer to Item 36 of Addendum 1

relays in a temperature switch shall operate from an independent, calibrated set point. Electronic instruments shall be suitable for use with ISA Type K thermocouples.

1B.25.4 Level Switches. Level switches shall be Magnetrol having float and body construction appropriate to the service conditions of the systems to which they are connected. Switch elements shall be of the mercury bottle type magnetically coupled to the float. Two switch elements shall be available at each level point monitored. Switches shall be reversible for NC or NO operation or shall be double throw construction. Switch element leads shall be of high temperature construction and terminated on terminal blocks within the switch housing. Switch housings shall be splashproof construction, unless otherwise specified.

1B.25.5 Solenoid Valves. Solenoid valves shall be manufactured by Automatic Switch Company. Valves shall be selected to incorporate body construction, trim materials, and internal arrangements suitable to the application and shall be acceptable to the Engineer. Solenoid enclosures shall be NEMA 4 unless otherwise specified. Solenoid coils shall be Class H high temperature construction and shall be suitable for continuous duty.

1B.25.6 Pressure Gages. Gages for control air supply and signal pressures integral to the instrument shall be in accordance with the control manufacturer's standards. All other gages shall be 4-1/2 inch Ashcroft "Duragauge". Dials shall be engraved with service legends, or separate nameplates of engraved laminated phenolic shall be attached to the gage faces to identify the service. Legends shall be as directed by the Engineer. All gages, except on control air service, shall have stainless steel movements and nylon bearings. Gages for panel mounting shall be Type 1377. Gages for separate mountings shall be Type 1379 with 1/2 inch NPT bottom connections. Pulsation dampeners shall be furnished with all gages except control air gages.

1B.25.7 Thermometers. Thermometers for local mounting shall be Ashcroft 5 inch dial AHT 6060 "Every Angle" bimetallic thermometers. Thermometers for panel mounting shall be Ashcroft 4-1/2 inch dial 6135 mercury actuated with Type 1377 case and stainless steel armored capillary tubing of length required for the installation. The dials shall be engraved with service legends, or separate nameplates of engraved laminated phenolic shall be furnished attached to the dial faces to identify the service. Legends shall be as directed by the Engineer. Thermowells shall be furnished for all thermometers and shall be extra heavy solid bored Type 316 stainless steel construction. They shall be threaded and designed to allow seal welding.

1B.25.8 Temperature Detectors. All detectors shall be of the dual element type. Detectors shall be ISA Type K (chromel-alumel) thermocouples with Type KX extension wire. Temperature detectors shall be of the stainless

steel sheathed, compacted magnesium oxide insulated type, and shall be ungrounded unless otherwise specified. Thermocouples and extension wire shall comply to the special limits of error contained in ANSI C96.1-1964.

Thermocouple assemblies shall be complete with cast iron weatherproof connection heads and nipples. Extension nipples, insulating bushings, and compression fittings shall be furnished if required for the application. Heads shall be designed for positive connection and for a terminal temperature differential of not more than 0.1 F. The thermocouple shall be spring loaded for positive contact with the wall. The lead wire for all related detectors shall be brought to common junction boxes.

Fluid system temperature detectors shall be equipped with extra heavy solid bored Type 316 stainless steel thermowells and extension nipples. The thermocouple, extension nipple, and head shall be arranged to permit removal and replacement of the thermocouple with the equipment in operation.

1B.26 ELECTRICAL ACCESSORY DEVICES. Electrical accessory devices shall be furnished in accordance with the requirements stated herein unless otherwise specified in the detailed specification sections.

1B.26.1 Electrical Instruments. All electrical indicating instruments shall be of the switchboard type with one per cent accuracy classification, shall be designed for semiflush mounting and, unless otherwise specified, shall be approximately 4 inches square. All instrument scales shall consist of black markings on a white background. Any instrument which is checked in the field and found to be inaccurate in excess of 2 per cent shall be returned to the Contractor for calibration or replacement without cost to the Owner. All ac instruments shall be designed for operation through 5 ampere current transformers secondaries and 120 volt potential transformer secondaries. Instruments shall be General Electric Type AB-40, Westinghouse Type 241, or acceptable equal.

1B.26.2 Control Relays. General service auxiliary relays shall be I-T-E Type J10A, J11A, J12A, J13P, or acceptable equal. Where current carrying requirements exceed the capacity of the J10A, auxiliary relays shall be General Electric Types HFA or HGA, Westinghouse Type MG-6 or acceptable equal.

Timing relays where the delay period may exceed 3 minutes shall be Agastat Series 7000 or acceptable equal.

1B.26.3 Control Switches. Control switches shall be 600 volt, 20 ampere, multistage, rotary type with a minimum of ten contacts. Switches shall have black, fixed, modern, pistol grip type handles and engraved black plastic escutcheon plates. Switches shall be Westinghouse Type W, General Electric Type SB-1, or acceptable equal.

1B.26.4 Push-buttons and Selector Switches. Push-buttons and selector switches shall be Square D, Class 9001, Type T or TS oiltight, Honeywell-Microswitch Type PT, or acceptable equal.

1B.26.5 Indicating Lights. Indicating lights shall be Honeywell-Micro Switch Type PTW with 387 lamps, transparent glass lenses, and appropriately sized resistors. Alternate equal indicating lights must be acceptable to the Engineer.

1B.26.6 Alarm Contacts. Alarm contacts for remote annunciation shall be suitable for operation at 250 volts dc.

1B.26.7 Molded Case Circuit Breakers. Molded case circuit breakers used in equipment covered under these specifications shall have 5000 amperes interrupting capacity at 250 volts dc and 10,000 amperes symmetrical interrupting capacity at 240 volts ac.

1B.26.8 Terminal Blocks. Terminal blocks shall be provided with white marking strips and, where permitted by the safety codes and standards, shall be without covers. Extra terminals in a quantity of not less than 25 per cent of the intraconnected terminals shall be provided on each terminal block for circuit modifications and for termination of all conductors in a multiconductor cable.

Fuses shall not be mounted on terminal blocks. Neither step type terminal blocks nor angle mounting of terminal blocks will be acceptable.

All terminal blocks, except internal terminal blocks in factory prewired electronic systems cabinets, shall be rated 600 volts and shall have strap screw terminals. Standard terminal blocks for 10 AWG and smaller conductors shall be General Electric Company Type EB-5 or acceptable equal. Terminal blocks shall be appropriately sized for larger incoming conductors. Shorting type terminal blocks shall be six point General Electric Company Type EB-5 or acceptable equal.

1B.26.9 Fuse Blocks. Where fuse blocks rated 30 amperes, 250 volts are required by the specifications or the manufacturer's design, they shall be modular type with bakelite frame and reinforced retaining clips. Blocks shall be Class H, Model No. 15530-R screw terminal fuse blocks and manufactured by Underwriters' Safety Device Co., 4332 North Kedzie Avenue, Chicago, Illinois 60618. Blocks for other current and voltage ratings shall be similar in construction and by the same manufacturer.

Article 1B.27 for Electrical equipment:

1B.27 NAMEPLATES. The nameplates for the power transformers shall be lettered in both English and Indonesian. Nameplates for other equipment shall be in English.

Nameplates shall be provided for switches and other devices and shall be lettered in English with legends and nameplates acceptable to the Engineer.

Panel mounted instruments shall have nameplates made of laminated black phenolic engraving stock with white core. The lettering shall be not less than 1/4 inch square, bold engraved through the black outside layers so that the letters appear white.

Nameplates for locally mounted instruments shall be attached to the faces of the instruments in a manner acceptable to the Engineer.

1B.28 FACTORY PREWIRED ELECTRONIC SYSTEMS CABINETS. Internal wiring in factory prewired electronic systems cabinets may be installed according to the Contractor's standard as to wire size insulation and method of termination on internal equipment. Identification of conductors may be done by insulation color coding identified on drawings or by printed wiring lists. Terminal blocks for connection of external circuits into factory prewired electronic systems cabinets shall meet all the requirements specified above under Terminal Blocks.

1B.29 AC MOTOR STARTERS. The Motor Control Center Specification and Data Sheet, following this section, shows the wiring of the ac motor starters which will be furnished by the Owner. The Contractor shall assure that the control wiring, including terminal designations, is compatible with the starter wiring as shown.

1B.30 RACEWAY. Unless specified otherwise, all raceway interconnections between devices, panels, boxes, and fittihgs shall conform to ANSI C80.1 and UL 6. All conduit connections shall be of the threaded type. Unless specified otherwise, all conduit shall be hot-dip galvanized rigid steel. All conduit entering outdoor enclosures shall enter through "Meyers Scru-Tite" hubs or threaded openings.

Double locknuts and bushings shall be provided at the termination of all conduit not terminated in hubs. Locknuts shall be designed to securely bond the conduit to the box or cabinet when tightened.

Insulating bushings with insulating inserts in metal housings shall be provided on conduit 1-1/4 inches and larger. Insulating bushings shall be grounding type. Standard bushings shall be galvanized.

Conduit fittings used on outdoor equipment shall be of heavy cast construction and shall be sealed and gasketed.

All conduit shall be installed in exposed runs parallel or perpendicular to dominant surfaces with right angle turns made of symmetrical bends or fittings. A run of conduit shall not contain more than the equivalent of four quarter bends, including those immediately at outlets and fittings. Bends in conduit shall be made without reducing the internal diameter of the conduit.

Conduit shall be supported at intervals not to exceed 5 feet by means of conduit clamps and clamp-backs.

Moisture pockets shall be eliminated from conduit installed on outdoor equipment. If water cannot drain to the natural opening in the conduit system, a hole shall be drilled in the bottom of a pull box or a "C-type" conduit fitting provided in the low point of the conduit run.

Conduit shall be securely fastened to all boxes and cabinets. Threads on metallic conduit shall project through the wall of the box to allow the bushing to butt against the end of the conduit. The locknuts both inside and outside shall then be tightened sufficiently to bond the conduit securely to the box.

The raceway system provided for all interconnecting wiring shall be acceptable to the Engineer.

1B.31 WIRING. In general, all devices furnished under these specifications and requiring electrical connnections shall be designed for wiring into junction boxes or cubicles with terminal blocks. Terminal blocks shall be provided for conductors requiring connection to circuits external to the specified equipment, for internal circuits crossing shipping splits, and where equipment parts replacement and maintenance will be facilitated.

All spare contacts on relays, control switches, limit switches or similar devices shall be wired to accessible terminal blocks for the Owner's future connections. All wiring leaving an enclosure shall leave from terminal blocks and not from other devices in the enclosure.

Auxiliary equipment such as terminal blocks, auxiliary relays or contactors shall be readily accessible. Auxiliary equipment shall be arranged in compartments, cubicles, or junction boxes that a serviceman will have direct access to the equipment without removal of barriers, cover plates, or wiring. Grouped terminal blocks for all external connections shall be provided.

Terminal blocks shall be grouped in instrument and control compartments for easy accessiblity unrestricted by interference form structural members and instruments. Sufficient space shall be provided on each side of each terminal block to allow an orderly arrangement of all leads to be terminated on the block.

A shorting type terminal block shall be installed at an accessible location for each current transformer. The shorting terminal block shall be the one nearest the current transformer.

Terminal blocks shall not be mounted in compartments containing cables or buses operating at voltages above 600 volts.

All wiring shall be conservatively selected for the electrical and environmental conditions of the installations. Unless otherwise specified or required otherwise to perform satisfactorily in a particular service, all

electrical conductor shall be Class B, stranded copper, 14 AWG or larger. Oil resistant and proper temperature application wiring shall be used throughout. MI cable is not acceptable. Control panel and cabinet wiring shall be stranded copper conductor with NEC Type SIS, cross-linked polyethylene insulation rated at 600 volts, designed for a maximum conductor temperature of 90 C, and shall meet the vertical flame test requirements per IPCEA S-19-81, Paragraph 6.19.6. Conductor insulation for other general service wiring shall be flame retardant polyethylene according to IPCEA S-19-81, Part 3.18. NEC Type SF-2 silicone rubber insulated cable with braided glass jacket shall be used where ambient conditions cause conductor operating temperatures to exceed 90 C.

Preinsulated ring-type terminals with crimp guides or preinsulated slotted spring spade terminals shall be provided on all control conductor terminals, except, noninsulated terminals shall be provided on devices equiped with individual fitted covers. Typical devices upon which control conductors shall be terminated with noninsulated terminals are General Electric Type SB-1 and Westinghouse Type W control switches and General Electric HEA and Westinghouse Type WL lockout relays.

Each terminal block, conductor, relay, breaker, fuse block, other auxiliary device, and terminal shall be permanently labeled to coincide with identification indicated on the drawings. All terminals provided for termination of external circuits shall be identified by inscribing circuit designations acceptable to the Engineer on the terminal block marking strips with black paint. All other wiring terminations shall be identified either by legible markings on the device terminals or by printing on wire sleeves. Terminal and conductor identification shall be by a permanent method unaffected by heat, solvents, or steam, and not easily dislodged, preferably by means of printing on plastic sleeves. Identification of conductors shall be by the method described hereafter or acceptable equal. Conductor identification shall be with slip-on sleeves not less than 1/2 inch long. The sleeves shall be as manufactured by the Dura Mark Company, Port Washington, New York. Conductor identification shall be printed on the sleeve with a Thomas and Betts Company Catalog No. WT163M-1 marking pen, Panduit Corp. Part No. PX marking pen, or acceptable equal. After inscription of the conductor identification, the marking sleeve shall be coated with clear acrylic spray coating, Krylon No. 1303 as manufactured by Borden, Inc., or acceptable equal. Adhesive labels are not acceptable.

The arrangement of connections on terminal blocks shall be acceptable to the Engineer.

All connections requiring disconnect plug type devices shall be provided with factory terminated conductors on both sides of each plug. Sufficient multiconductor cable shall be provided to connect the plugs into junction boxes containing terminal blocks for the Owner's external connections. All conductors on the disconnect portion of plugs shall be in a common jacket.

All temporary wiring installed in the factory for equipment testing shall be removed prior to shipment of the equipment.

1B.32 CABLE TERMINATION PROVISIONS. Electrical conductors supplying the equipment provided under these specifications will be sized for installation in covered electrical cable tray to a 4 inch loading depth and with 40 per cent random fill. Sizing will be in accordance with the requirements of the following standards:

IPCEA - NEMA Standard of Ampacities of Cables in Trays, 1972

AIEE - IPCEA Power Cable Ampacities Handbook, 1962 (IPCEA P-46-426 & IEEE Publication No. S-135)

IPCEA Short Circuit Characteristics of Insulated Cable, Publication P-32-382, 1969

Capacity of conduit entrances, terminal enclosures, and conductor terminals shall be as required to accommodate either copper or aluminum conductors which are sized as described in the previous paragraph.

No produced commodity shall be eligible for AID financing if such commodity contains any components which were imported into the producing country and such components were acquired by the producer in the form in which they were imported; and the total cost of such components (delivered at the point of production) amounts to more than 50 per cent of the lowest price (excluding the cost of ocean transportation and marine insurance) at which the supplier makes the commodity available for export sale, whether or not financed by AID. Indonesian source goods and services are ineligible for AID financing with the exception of insurance and certain commissions as set forth in the AID Guidelines.

No produced commodity shall be eligible for AID financing if such commodity has been transported to Indonesia by: a transportation medium owned, chartered, or under the control of any Communist bloc country; a vessel which AID, by written notice to the Owner, has designated as ineligible; or under any ocean or air charter which has not received prior approval by AID.

GC.36 BOOKS AND RECORDS. The Contractor shall maintain adequate books and records covering all transactions under or in connections with this Contract. The books and records shall be maintained for a period of not less than 5 years after the date of final payment under this Contract. The books and records shall be available for inspection and audit by the Owner and/or AID to insure compliance with the requirements of this Contract. If the Contract is for a fixed price, an audit as to cost will not be performed except for cost reimbursable items; however, they will be subject to audit for compliance with source and origin, transportation, and comparable requirements.

GC.37 LEGAL EFFECT OF CERTAIN AID APPROVALS AND DECISIONS. The parties hereto understand that AID has reserved certain approval rights including but not limited to, the right to approve the terms of this Contract, the Contractor, and any or all plans, reports, specifications, subcontracts, bid documents, drawings, or other documents related to this Contract and the project of which it is part. The parties hereto further understand and agree that AID, in reserving any or all of the foregoing approval rights, has acted solely as a lender to assure the proper use of United States Government funds, and that any decision by AID to exercise or refrain from exercising these approval rights shall be made as a lender in the course of financing the project and shall not be construed as making AID a party to the contract. The parties hereto understand and agree that

ITEM.
SPEC
PROJEC

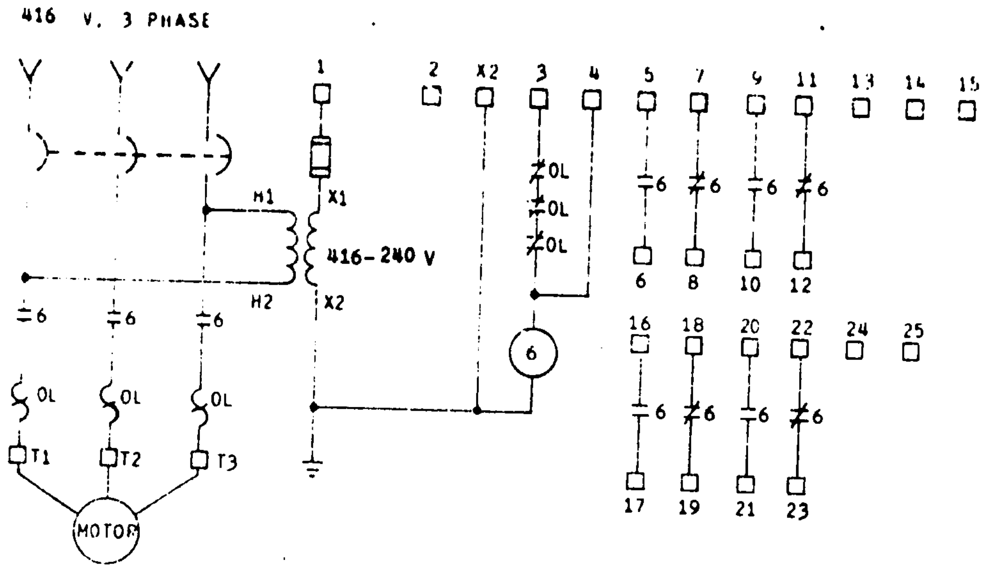

WIRING DIAGRAM COMBINATION FULL VOLTAGE NON-REVERSING STARTER

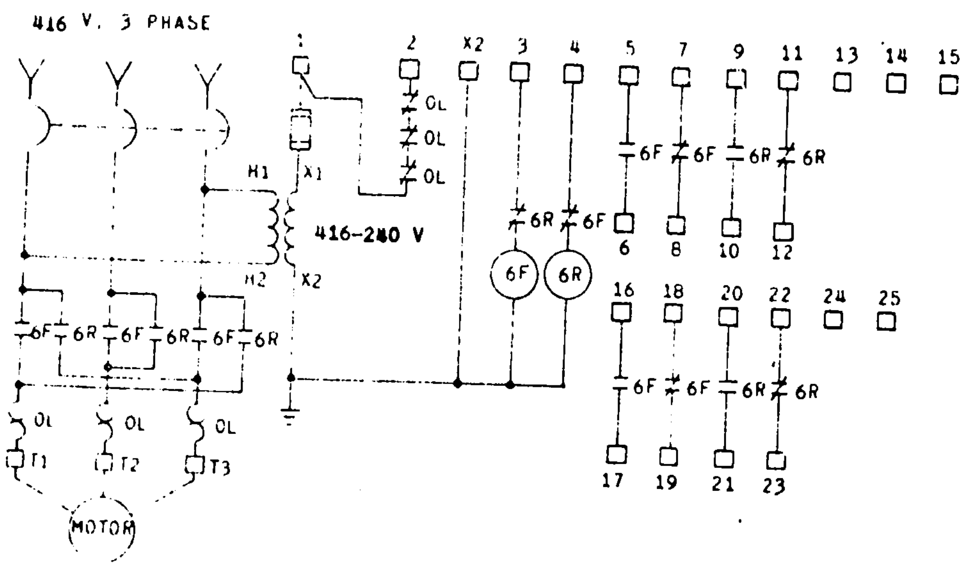

WIRING DIAGRAM COMBINATION FULL VOLTAGE REVERSING STARTER

BLACK & VEATCH INTERNATIONAL
CONSULTING ENGINEERS
KANSAS CITY, MO.

MOTOR CONTROL CENTER
SPECIFICATION AND DATA SHEET

1B-16

YELLOW

PROJECT AID
BARANG PEMERINTAH
PROYEK PELITA

RED
BLUE

PERUSAHAAN UMUM LISTRIK NEGARA
PROYEK PLTU SEMARANG
JL. SILIWANGI 379 SEMARANG

L/C NO.:
I.R.NO.:

SEMARANG
INDONESIA

CASE NO.:

GROSS WEIGHT:
NET WEIGHT:
DIMENSION:

NOTES:
1. THE ABOVE MARKINGS ARE TO BE PLACED ON TWO OPPOSITE STANDING SIDES.
2. TAGS ARE TO BE MARKED AS SHOWN ABOVE EXCEPT THAT CORNER MARKINGS ARE NOT REQUIRED.
3. TAGS ARE TO BE PROTECTED FROM FADING.
4. AID "CLASPED HANDS" EMBLEM SHALL ALSO BE APPLIED TO ALL SHIPPING CONTAINERS.

P-GN-009-B

BLACK & VEATCH INTERNATIONAL CONSULTING ENGINEERS KANSAS CITY MISSOURI USA	SHIPPING CONTAINER IDENTIFICATION	PROJECT 6104
	PERUSAHAAN UMUM LISTRIK NEGARA SEMARANG STEAM POWER PLANT UNITS 1&2	PAGE 1B-17

Section 1C - ENGINEERING DATA

1C.1 GENERAL. This section covers engineering data, instruction manuals, and manufacturer's drawings which the Contractor shall submit to the Engineer for design information or review. As stipulated in Section 1A, compliance with the specified schedule for drawing and data submittal is essential to the scheduled progress and completion of Units 1 and 2 and is of the essence of this Contract.

1C.2 CORRESPONDENCE. Correspondence forwarding drawings, instruction manuals, and other engineering data shall be addressed as follows:

Black & Veatch International
P.O. Box 8405
Kansas City, Missouri 64114

Attention: Mr. L. J. Svoboda

1C.3 MOTOR INFORMATION. A sample Motor Information Sheet is bound at the end of this section. The successful bidder shall submit copies of this sheet, with all data filled in as indicated, for each motor rating for which a Motor Specification and Data Sheet has been included in these specifications. These sheets shall be completed and copies submitted as specified in this Section 1C. The number of copies required shall be the same as for other manufacturer's drawings.

1C.4 DRAWINGS. Drawings shall be submitted for the Engineer's review in accordance with the following procedures and schedules.

1C.4.1 Procedures. Drawings shall be in sufficient detail to indicate the kind, size, arrangement, weights of each component, breakdown for shipment, and operation of component materials and devices; the external connections, anchorages and supports required; the dimensions needed for installation and correlation with other materials and equipment; and the information specifically requested in this section under "Schedules".

Six copies of each drawing, preliminary or certified, shall be submitted to the Engineer. Each drawing submitted, shall be clearly marked with the name of the project, the specification number, the Engineer's assigned number, the Contractor's name, and references to applicable specification paragraphs. When catalog pages are submitted, the applicable items shall be indicated.

"Preliminary" drawings shall be reasonably complete and suitable for the Engineer's use in establishing basic plant arrangement and design requirements. Preliminary drawings will not be reviewed by the Engineer; however, the Engineer will refer to the Contractor conflicts or discrepancies which he may discover in his reference to the drawings.

"Certified" drawings will be reviewed by the Engineer and returned to the Contractor marked RETURNED FOR CORRECTION, EXCEPTIONS NOTED, NO EXCEPTIONS NOTED, or RECEIVED FOR DISTRIBUTION.

When the drawings are returned marked NO EXCEPTIONS NOTED or RECEIVED FOR DISTRIBUTION, additional copies shall be submitted to the Engineer for distribution. The number of additional copies will be determined by the Engineer, but will not exceed six.

When the drawings are returned marked EXCEPTIONS NOTED the changes shall be made as noted thereon and corrected copies shall be submitted to the Engineer for final review and distribution. The number of corrected copies will be determined by the Engineer, but will not exceed twelve.

When the drawings and data are returned marked RETURNED FOR CORRECTION the corrections shall be made as noted thereon and as instructed by the Engineer and six corrected copies shall be resubmitted for review.

The Engineer's review of drawings and data will cover only general conformity to the specifications and the external connections and dimensions which affect the plant arrangement. The Engineer's review of drawings returned marked NO EXCEPTIONS NOTED, or EXCEPTIONS NOTED does not indicate a thorough review of all dimensions, quantities, and details of the material, equipment, device, or item indicated and does not relieve the Contractor from any responsibility for errors or deviations from the specification requirements.

No work shall be performed in connection with the fabrication or manufacture of equipment and materials until the drawings and data therefor have been reviewed by the Engineer. Work may proceed on equipment and materials when the drawings and data therefor have been returned marked NO EXCEPTIONS NOTED or RECEIVED FOR DISTRIBUTION and when drawings have been marked EXCEPTIONS NOTED provided the work is performed in accordance with the Engineer's notations.

All drawings, after final processing by the Engineer, shall become a part of the specification documents and the work indicated or described thereby shall be performed in conformity therewith unless otherwise required by the Owner or the Engineer.

When changes in the wiring and equipment are made in the field to correct shop construction errors or to adapt the requirements to the Owner's requirements, the Contractor shall prepare and submit 12 copies of record drawings to the Engineer to indicate the equipment as finally installed.

Upon receipt from the Engineer of drawings marked NO EXCEPTIONS NOTED or RECEIVED FOR DISTRIBUTION, the Contractor shall transmit one full size reproducible print of each drawing to the Engineer. The reproducible shall be right reading, on 0.003 inch thick Du Pont wash-off mylar and shall not exceed 34 inches by 44 inches in size. Diazo sepias, black line mylar, or auto-positive reproducibles will not be acceptable.

Three microfilm aperture cards of each final drawing shall be submitted. Microfilming and aperture card mounting shall be in accordance with the applicable requirements of Military Specifications MIL-M-9868, and MIL-M-38761.

1C.4.2 Schedules. Drawings shall be submitted in accordance with the following schedules. The number of days specified shall be from and after the date of contract award.

a. For preliminary issue within 30 days and certified issue within 75 days:

   Detailed outline drawings of all heat exchangers to include full information required for design of support pads, recommended reaction forces on piping including directions, nozzles, and miscellaneous connections.

b. For preliminary issue within 45 days and certified issue within 90 days:

   Detailed drawings of the heat exchangers internals

   Wiring diagrams

   Completed Motor Information Sheets

c. For preliminary issue within 60 days and certified issue within 105 days:

   Miscellaneous trim drawings

d. For preliminary issue within 90 days and certified issue within 135 days:

   Erection drawings

1C.4.3 Wiring Diagrams. Connection and interconnection wiring diagrams furnished by the Contractor shall meet the requirements of ANSI Y 14.15a-1971, Section 15-11, Article 15-11.3.2.1, BRANCHED HIGHWAY. The wiring drawings shall be drawn with all devices indicated in their relative physical locations. Wiring diagrams shall be rear view. Each device connection shall have near each termination, indicated in separate breaks, the opposite end destination.

Wiring diagrams shall be prepared on sheets approximately 34 inches by 44 inches. Where interconnecting wiring from different items of equipment or sectional wiring diagrams of the same item of equipment appear on different wiring diagram sheets, all interconnections shall be clearly identified. Where sectional wiring diagrams are required for a single item of equipment such as a relay panel or control panel, that section of the panel which is represented by each individual wiring diagram sheet shall be keyed on that sheet in a manner acceptable to the Engineer.

Information indicated on the Contractor's drawings shall include wiring of the individual panel items as they actually will appear in the panel, contact arrangements of switches, and internal wiring of relays and instruments.

Elementary diagrams shall be cross-referenced to terminal markings on the connection and interconnection diagrams, but need not indicate complete details of circuits external to the panels. Each item of panel mounted equipment indicated on the diagrams shall be identified by item number and name.

Sufficient space shall be left on the Owner's side of outgoing terminal blocks for adding cable color codes and circuit numbers.

1C.5 INSTRUCTION MANUALS. The Contractor shall furnish 10 complete and final copies of instruction manuals for the equipment not later than 30 days prior to the shipment of the equipment.

Nine final copies of the instruction manuals shall be sent to the Owner and one final copy shall be sent to the Engineer.

Manuals shall be assembled and bound in Buchan Type ORL (old style) binders covered with pyroxylin impregnated black buckram covers, manufactured by Buchan Loose Leaf Records Co., Clifton Heights, Pennsylvania. Binders shall not be greater than 3-1/2 inches thick and shall be adjustable to permit secure compact binding. Each binder shall be stamped with the proper identification as indicated on Drawing A6104-030273 bound at the end of this section. Binders shall be black with gold lettering.

A complete proofed copy of the proposed manual, including cover lettering, shall be submitted to the Engineer for acceptance. After acceptance, the remaining copies shall be submitted as directed by the Engineer.

The manuals shall include the following:

Table of Contents and index tabs

Specifications, test data, and curves

Description of the equipment

Operating instructions

Instructions in methods of receiving, inspection, storage, and handling

Complete installation and maintenance instructions

Assembly drawings

Parts lists

Schedule of required lubricants

Nameplate information and shop order numbers for each item of equipment and component part thereof

List of recommended spare parts and prices

List of maintenance tools furnished with the equipment

MOTOR _____

ITEM _____
SPEC M-12B
PROJECT 6104

MOTOR DATA TO BE SUBMITTED BY SUCCESSFUL BIDDER AS SPECIFIED

INFORMATION REQUIRED FOR ALL MOTORS.

HP _____
FULL LOAD SPEED _____ RPM
FULL LOAD CURRENT _____ AMPS
LOCKED ROTOR CURRENT _____ AMPS
TOTAL MOTOR WT _____ LBS
SPACE HEATERS (IF FURNISHED)
NUMBER OF UNITS _____
UNIT RATING, WATTS _____

TEMP. RISE _____ C BY RESISTANCE
AT SERVICE FACTOR OF 1.0 _____ ; 1.15 _____.

SOUND LEVELS:
SOUND POWER LEVEL
RE 10-12 WATTS _____ dBA
FREE FIELD

INFORMATION REQUIRED FOR ALL MOTORS 200 HP AND LESS

SOUND LEVELS:
OVERALL MEAN SOUND PRESSURE LEVEL
RE 0.0002 DYNES/CM^2 REFERENCE DISTANCE OF 3 FEET _____ dBA FREE FIELD

INFORMATION REQUIRED FOR MOTORS LARGER THAN 200 HP

EFFICIENCY, PER CENT
LOAD: 1/2 ____ 3/4 ____ 4/4 _____
POWER FACTOR, PER CENT
LOAD: 1/2 ____ 3/4 ____ 4/4 _____

MINIMUM STARTING VOLTAGE IN PER CENT OF FULL VOLTAGE:
CALCULATED: _____
SPECIFIED: _____

OUTLINE DWG. NO. _____
ALLOWABLE STARTS _____
ACCELERATING TIME:
AT FULL VOLTAGE _____ SEC.
AT STARTING VOLTAGE _____ SEC.
LOCKED ROTOR PF _____ PER CENT
LOCKED ROTOR TORQUE _____ FT-LB
PULL UP TORQUE _____ FT-LB
BREAKDOWN TORQUE _____ FT-LB
TOTAL ROTOR WT _____ LBS
ROTOR INERTIA _____ LB-FT^2
OPEN CIR. TIME CONS'T. _____ SEC.
LOCKED ROTOR SAFE STALLED TIME:
AT FULL VOLTAGE _____ SEC.
AT STARTING VOLTAGE _____ SEC.
FOR VERTICAL MOTORS: REED FREQUENCY _____ CPS

SOUND LEVELS:
OVERALL MEAN SOUND PRESSURE LEVEL
RE 0.0002 DYNES/CM^2 AT 5 FEET _____ dBA
FREE FIELD

OCTAVE BAND MEAN SOUND PRESSURE LEVEL
RE 0.0002 DYNES/CM^2 REFERENCE DISTANCE OF 5 FEET

FREQUENCY RANGE, CPS	LEVEL, dBC
90-180	_____
180-355	_____
355-710	_____
710-1400	_____
1400-2800	_____
2800-5600	_____
5600-11200	_____

FOR MOTORS FOR WHICH DIFFERENTIAL PROTECTION IS SPECIFIED:
STATOR CONN: WYE _____
DELTA _____

FOR HORIZONTAL MOTORS RATED 1000 HP AND LARGER AT 3000 RPM AND FOR ALL MOTORS RATED 3500 HP AND LARGER AT ALL SPEEDS:
CRITICAL SPEEDS: FIRST CRITICAL _____ RPM
SECOND CRITICAL _____ RPM

BLACK & VEATCH INTERNATIONAL
CONSULTING ENGINEERS
KANSAS CITY, MO.

MOTOR
INFORMATION SHEET

1C-6

NAME
OF
EQUIPMENT

PERUSAHAAN
UMUM LISTRIK
NEGARA

SEMARANG
STEAM POWER
PLANT

UNITS
1 & 2

VOLUME
NUMBER*

(Backbone)

PERUSAHAAN UMUM LISTRIK NEGARA
AGENCY OF MINISTRY OF PUBLIC WORKS AND POWER
GOVERNMENT OF REPUBLIC OF INDONESIA
JAKARTA, INDONESIA

SEMARANG STEAM POWER PLANT
100 MW (2 x 50 MW) UNITS 1 & 2

INSTRUCTION BOOK

FOR

NAME OF EQUIPMENT

VOLUME NUMBER*

MANUFACTURER'S NAME
MANUFACTURER'S ADDRESS

AID LOAN 497-H-024

BLACK & VEATCH INTERNATIONAL
CONSULTING ENGINEERS
KANSAS CITY, MISSOURI, U.S.A.

(Cover)

NOTE:

Cover Type: Large - 36 point Alternate Gothic #2
Medium - 16 point Futura Medium
Small - 12 point Futura Medium

Backbone Type: All same point size of Alternate Gothic #2 (Either 10 point, 12 point or 14 point) as backbone width allows.

* Stamp cover with volume number if instructions are contained in more than one volume

TYPICAL EQUIPMENT INSTRUCTION BOOK COVER

BLACK & VEATCH INTERNATIONAL CONSULTING ENGINEERS KANSAS CITY, MO., U.S.A.	PERUSAHAAN UMUM LISTRIK NEGARA SEMARANG STEAM POWER PLANT UNITS 1 & 2	A6104-030273

Section 1D - ELECTRIC MOTORS

1D.1 GENERAL. These motor specifications are applicable to all electric motors required for the operation of the equipment furnished. Motor Specification and Data Sheets for the integral horsepower motors required have been included in the equipment articles as required. Any motors not specifically covered, but still required for operation of the equipment, shall be furnished. The Contractor shall list and include as part of the Proposal the additional motors being furnished, and they shall be in accordance with these specifications.

Subsection 1D1 - INTEGRAL HORSEPOWER AC MOTORS

1D1.1 GENERAL. These motor specifications are applicable to all integral horsepower ac electric motors required for the operation of the equipment furnished. Motor Specification and Data Sheets for the motors required have been included in the equipment articles as required.

The requirements of the individual Motor Specification and Data Sheets shall govern where conflicts occur.

1D1.2 CODES AND STANDARDS. All motors shall be designed and fabricated to conform to the requirements of applicable ANSI, IEEE, and NEMA standards.

1D1.3 RATING. Unless otherwise stated in the technical sections or on the Motor Specification and Data Sheets, all integral horsepower motors shall be designed for operation on 380 volts, 3 phase, 50 hertz.

Motors shall be designed for full voltage starting, frequent starting where required, and shall be suitable for continuous duty in the specified ambient. Intermittent duty motors may be furnished where recognized and defined as standard by the equipment standards and codes. Motors shall be sized for the altitude at which the equipment will be installed.

The motor rated horsepower at 1.0 service factor shall not be less than the brake horsepower required to drive the furnished equipment at the maximum design point of the equipment. Motors shall be sized so that, under maximum load conditions imposed by the driven equipment, the motor has an additional continuous rated overload capacity of not less than 15 per cent. Motors with a service factor of 1.15 may be applied up to full nameplate horsepower rating. Motors with a service factor of 1.00 may be applied up to 87 per cent of full nameplate rating.

1D1.4 NAMEPLATE DATA. All motor nameplate data shall conform to NEMA MG 1 requirements. The following additional nameplate data shall be included:

Manufacturer's identification number
Frame size number
Insulation system class designation
Service factor
Locked-rotor kVA code letter
Starting limitations, if any
Direction of rotation and voltage sequence as specified later

1D1.5 DESIGN AND CONSTRUCTION. Design and construction of each motor shall be coordinated with the requirements of the driven equipment and as designated on the Motor Specification and Data Sheets.

1D1.5.1 Service Factor. For all motors furnished with a service factor greater than 1.0, the service factor shall be in accordance with NEMA MG 1-12.47.

1D1.5.2 Enclosures. All motors shall be self-cooled.

The stator and rotor air gap surfaces of all motors shall be protected with a corrosive resistant alkyd enamel or with polyester epoxy eposy paint or coating.

Motors for outdoor service shall have all exposed metal surfaces protected, where practical, with a corrosion resistant polyester or epoxy paint or coating. Exposed unpainted and uncoated metal surfaces shall be of a corrosion resistant material.

The fan hoods of totally enclosed fan cooled motors shall meet NEMA MG 1 requirements for a fully guarded machine.

Totally enclosed motors shall be furnished with drain plugs, and with cast iron frames, bearing brackets, and terminal housings. Fan cooled motors shall have fans fabricated of corrosion resistant metal and cast iron fan covers. Drain plugs shall be Crouse-Hinds Type ECD "Universal" combination water drain-breather type or acceptable equal.

In addition to the foregoing requirements for outdoor service motors, totally enclosed NEMA waterproof motors shall have enclosure interior surfaces protected with a corrosion resistant alkyd enamel or with polyester or epoxy paint or coating. Bolts, nuts, screws, and other hardware items shall be corrosion resistant material or heavy cadmium plated. A rotating labyrinth shaft seal shall be furnished on the shaft extension end of the motor.

All motor nameplates and attachment pins shall be corrosion resistant material.

1D1.5.3 Insulation. All insulated windings shall have nonhygroscopic Class B, sealed insulation system rated for temperature rise and ambinet temperature in accordance with NEMA MG 1 standards for the insulation class specified except for motors having a service factor greater than 1.0. The observable temperature rise measured by resistance for motors having a service factor greater than 1.0 shall not exceed 85 C when operating at service factor load.

When ambient temperatures greater than 40 C are specified. the observable temperature rise shall be reduced in accordance with NEMA MG 1 standards.

For the sealed insulation system specified, two additional dips and bakes of epoxy varnish or vacuum-pressure impregnation shall be included to provide a premium insulation for random windings.

The insulation resistance corrected to 40 C shall be not less than motor rated kV+1 megohms for all windings.

1D1.5.4 Space Heaters. All motors furnished in NEMA 180 frame series or larger shall have 240 volt, single phase, 50 hertz space heaters. Space heaters shall be provided inside the motor enclosure in a location suitable for easy removal and replaceemnt. Space heaters shall be of the capacity required to maintain the motor internal temperature above the dew point when the motor is idle. They shall be isolated by a heat insulation barrier or located so as not to cause heat damage to adjacent painted surfaces nor cause thermal protective device "over temperature" indication when the motor is not energized. Space heater leads shall be 600 volt stranded copper cable and shall include terminal connectors.

1D1.5.5 Terminal Housings. A single terminal housing for motor power leads and accessory leads shall be furnished on all motors.

Terminal housings shall be cast iron. Housing shall be diagonally split with a gasket between the diagonally split halves of the housing. Each housing shall have a threaded opening to provide a watertight rigid connection with the conduit and shall be designed for rotation in 90 degree increments, or provisions included otherwise, to receive conduit from any of four directions. A nonconducting motor lead positioner and gasket shall be furnished between the housing and the motor frame. All motor leads located in the housing shall have terminals and shall be permanently numbered for ease of identification.

All motor power lead terminal housings shall be at least one size larger than normally furnished as standard.

1D1.5.6 Leads. All motor power leads and space heater leads shall be wired into the motor terminal housing. All motor leads and their terminals shall be permanently marked in accordance with the requirements of NEMA MG 1, Part 2.

Leads for dual voltage rated motors shall be easily connected or reconnected in the terminal housing for operating voltage. Permanent instructions for making these connections shall be furnished inside the terminal housing or on the motor frame or nameplate.

1D1.5.7 Terminals. All cable type leads shall be provided with Burndy Type YA (long barrel) or equivalent compression type connectors.

1D1.5.8 Ground Connectors. Motors shall be furnished with a grounding connector attached to the motor frame inside the motor power lead terminal housing. The grounding connector may be a lug or terminal or other acceptable grounding connector. ~~/The/ground/cable/size/will/be/given/later.~~ *

*Refer to Item 37 of Addendum 1

1D1.5.9 Bearings. All motors furnished shall be provided with grease lubricated, rolling element, self-lubricated, regreaseable type bearings.

Grease or oil lubricated rolling element thrust and radial bearings shall be designed and fabricated in accordance with AFBMA standards to have a minimum L-10 life rating of not less than 130,000 hours under the load, speed, and thrust requirements for direct coupled service. Grease lubricated radial bearings shall be double-shielded.

Bearings and bearing housings shall be designed to permit disassembly in the field for inspection of bearings or removal of rotor.

Thrust bearings for vertical motors shall be capable of operating for extended periods of time at any of the thrust loadings imposed by the specific piece of driven equipment during starting and normal operation without damage to the bearing, the motor frame, or other motor parts.

Stacked rolling element bearings will not be acceptable except as vertical thrust bearings in frame sizes up through NEMA 360 Series open type enclosures and up through NEMA 680 Series totally enclosed type enclosures. Where stacked bearings are furnished, matched pair, ABEC Grade 3 precision tolerance bearings with flush ground sides shall be provided. Bearing seats on the shaft and the bearing in housing shall have accuracy equal to that of the bearing.

All mountings for bearings shall be designed to prevent the entrance of lubricant into the motor enclosure or dirt into the bearings, and shall be provided with pipes, drain plugs, and fittings arranged for safe, easy relubrication from the outside of the motor while the motor is in service.

Bearing lubrication shall be furnished by an internal lubrication system.

The Contractor shall furnish all lubrication information required to assure proper equipment startup and subsequent bearing maintenance. Motors furnished with rolling element bearings shall have the AFBMA bearing identification number indicated on a nameplate attached to the motor frame.

1D1.5.10 Rotors. All induction motors shall have squirrel-cage rotors. Rotors shall be adequately sized to avoid overheating during acceleration of the motor and driven equipment. Rotors not of integral die cast construction shall be furnished with copper or copper alloy cage material.

All motor rotating components shall be dynamically balanced after mounting on the shaft. Motor vibration shall not exceed the peak-to-peak amplitude values given in NEMA MG 1 standards when measured in accordance with those standards. In addition, the magnitude of vibration values for twice the line frequency vibrations shall not exceed 0.5 mil.

1D1.5.11 Shafts. Where shipment permits, motor output shafts shall be complete with motor half coupling mounted, connected to the driven equipment, and adjusted ready for operation. Where motor size prevents shipment with motor connected to driven equipment, the motor half coupling shall be factory mounted for field connection to the driven equipment.

1D1.5.12 Torque Characteristics. The torque characteristics of all induction motors at 90 per cent rated voltage or at the starting conditions indicated on the Motor Specification and Data Sheets shall be as required to accelerate to full speed the inertia loads of the motor and driven equipment without damage to the motor or the equipment. All motors shall be designed and fabricated to withstand the forces of across-the-line starting at 110 per cent rated voltage.

Motors shall have torques and locked-rotor current in accordance with NEMA MG 1, Part 12 for the specified design classification. Locked-rotor kVA/hp at rated voltage and frequency shall not exceed 5.77.

1D1.5.13 Critical Speeds. Motors shall be designed to keep torsional and rotational natural frequencies of vibration outside of the motor rated speed ranges to avoid resonant vibration over the operating speed range of the equipment-motor unit.

1D1.5.14 Noise Level. The average no-load overall sound pressure level re 0.0002 dynes/cm^2 shall not exceed 90 dBA measured 3 feet from major machine surfaces for motors furnished in NEMA 440 series frame sizes and smaller. The sound level for motors furnished in frame sizes larger than NEMA 440 series shall not exceed 90 dBA measured 5 feet from major machine surfaces. Sound pressure levels shall be determined from 5-position readings.

Octave band sound pressure level values re 0.0002 dynes/cm^2 dBC shall be included on each Motor Information Sheet.

In addition to conformance with the specified noise level, single frequency air-borne windage noise shall not exceed levels which can produce damage to the human ear.

Noise level measurements shall be in accordance with the requirements of IEEE No. 85 Test Procedures.

Sound reduction baffles, mufflers, and materials shall be contained within the motor enclosure except external fan mufflers may be furnished for totally enclosed fan cooled motors.

1D1.6 FACTORY TESTS AND INSPECTION. Each motor shall be tested and inspected at the manufacturer's factory to determine that it is free from electrical or mechanical defects and to provide assurance that it meets the requirements of these specifications. Test procedures shall be in accordance with IEEE No. 112A Test Procedure for Polyphase Induction Motors and Generators.

Standard routine tests and inspections shall be made on each motor. These shall include the following:

No-load running current at normal voltage
Locked-rotor current at fractional voltage
Dielectric test
Inspection of bearings and bearing lubrication system

Five copies of reports of the routine test for each motor shall be included with the dimensional outline drawings submitted to the Engineer.

1D1.7 MOTOR SPECIFICATION AND DATA SHEETS. The Motor Specification and Data Sheets specify the major construction requirements for each motor. After award of contract, in accordance with the schedule specified in Section 1C, the Contractor shall complete and submit copies of the Motor Information Sheets for each motor rating furnished with all motor data filled in. A sample Motor Information Sheet is included at the end of Section 1C.

1D1.8 MANUFACTURERS. Motors shall be as manufactured by one or more of the following:

Allis-Chalmers
Century
Electric Machinery
General Electric
Reliance
U.S. Motors
Westinghouse

Subsection 1D2 - FRACTIONAL HORSEPOWER AC MOTORS

1D2.1 GENERAL. These specifications supplement the integral horsepower ac motor section and cover all general, special, and definite purpose fractional horsepower motors provided in NEMA 2-digit frames. Motors provided under these specifications including those constructed integrally with the driven equipment shall be the manufacturer's proven design standard furnished completely assembled, lubricated, and ready for operation.

The requirements of the individual technical sections shall govern where conflicts occur.

1D2.2 CODES AND STANDARDS. In addition to the requirements of the integral horsepower ac motor section, all motors shall be selected for installation and use for the equipment duty service in accordance with NEMA MG 1 and MG 2 requirements.

1D2.3 RATING. Motor rating, service factor and nameplate data shall conform to the requirements of NEMA MG 1 standards. Motors shall be designed for full voltage starting, frequent starting where required, and shall be suitable for continuous duty in a 50 C ambient. Intermittent duty motors may be furnished where recognized and defined as standard by the equipment standards and codes.

Motor nameplate horsepower ratings shall not be exceeded when the equipment is operating within the limits of the design conditions specified. The motor loading shall not exceed the motor service factor rating under starting conditions or at the equipment maximum load point.

All motor torque characteristics shall conform to the requirements specified in the integral horsepower ac motor section.

Unless specified otherwise in the individual technical sections, all ac motors shall be designed for operation on 380 volts, 3 phase, 50 hertz for motors 3/4 horsepower and larger, and 230 volts, single phase, 50 hertz for motors less than 3/4 horsepower.

1D2.4 DESIGN AND CONSTRUCTION. Type, design, and construction of each motor shall be coordinated with the driven equipment requirements as specified in the individual technical sections.

1D2.4.1 Shafts. Shafts shall be furnished with corrosion resistant treatment unless a corrosion resistant material is specified.

1D2.4.2 Insulation. All motors shall have Class B insulation in accordance with the requirements of the integral horsepower section except temperature rise shall be in accordance with NEMA MG 1 standards.

1D2.4.3 Terminals and Leads. Terminal and lead details including identification, dimensions and locations of terminal housings, terminal boards, combination spade, screw, or stud terminals, and terminal spacing shall be in accordance with NEMA MG 1 and MG 2 standards. Where supplied, terminal boards shall be fabricated of nonhygroscopic material. When dual voltage rated motors are furnished as standard, the leads shall be easily connected or reconnected in the terminal housing for either operating voltage. Permanent instructions for making these connections shall be furnished inside the terminal housing or on the motor frame or nameplate.

1D2.4.4 Ground Connectors. All motors, including those with resilient mountings, shall be furnished with a common ground connection in accordance with NEMA MG 2-2.06. A ground connector shall be provided inside the motor terminal housing for 12 AWG grounding cable.

1D2.4.5 Rotors. All motor rotors shall be designed adequately sized to avoid overheating during acceleration of the motor and driven equipment. Rotors shall be keyed or otherwise securely mounted on the motor shaft and shall be dynamically balanced. Starting switches, where required, shall be designed to provide quiet, positive action at the proper opening and closing speed.

1D2.4.6 Bearings. Bearings for fractional horsepower motors shall be designed to operate in any position or angle. One-piece sleeve bearings with wick lubrication shall be furnished where available. Ball bearings shall be furnished where sleeve bearings are not available and where axial thrust loads exceed 20 pounds.

1D2.4.7 Capacitors. Capacitors, where required, shall be furnished in removable metal enclosures mounted on the motor frames. Lock washers shall be furnished under the capacitor enclosure holddown screws.

1D2.4.8 Thermal Protection. Manual reset thermal protection, for both stalled rotor and overload protection, shall be furnished on all motors where available unless specified otherwise in the individual technical sections.

1D2.5 TESTS. Routine tests in accordance with NEMA MG 1 requirements shall be performed on each motor at the factory to determine that there are no electrical or mechanical defects.

1D2.6 MANUFACTURER. The motor manufacturer shall be as selected by the Contractor.

PART 2 - TECHNICAL REQUIREMENTS

TABLE OF CONTENTS

	Page
* Section 2A - FEEDWATER HEATERS	2A-1 thru 2A-11
2A.1 General	2A-1
2A.2 Code Requirements	2A-1
2A.3 Specification Sheets	2A-1
2A.4 Type	2A-1
2A.5 Arrangement	2A-1
2A.6 Design	2A-1
2A.7 Performance	2A-1
2A.8 Materials	2A-2
2A.9 Construction	2A-3
2A.10 Accessories	2A-4
2A.11 Shell Interior Protection	2A-6
2A.12 Specification Sheet Abbreviations	2A-7
Feedwater Heater Specification Sheets	2A-7
Feedwater Heater Cycle Diagram	2A-8 thru 2A-11
	6104-Q72773-1
Section 2B - DEAERATING HEATER	2B-1 thru 2B-7
2B.1 General	2B-1
2B.2 Code Requirements	2B-1
2B.3 Specification Sheet	2B-1
2B.4 Type	2B-1
2B.5 Arrangement	2B-1
2B.6 Design	2B-1
2B.7 Performance	2B-2
2B.8 Materials	2B-3
2B.9 Construction	2B-4
2B.10 Accessories	2B-6
2B.11 Cleaning and Protection of Interior Surfaces	2B-7
2B.12 Abbreviations	2B-7
Deaerator Specification Sheets	2 Sheets
Section 2C - AUXILIARY COOLING WATER HEAT EXCHANGERS	2C-1 thru 2C-5
2C.1 General	2C-1
2C.2 Code Requirements	2C-1
2C.3 Type	2C-1
2C.4 Arrangement	2C-1
2C.5 Performance	2C-1
2C.6 Guarantees	2C-2

* Deleted for Contract

(PLN - 6104)
(HEAT EXCHANGERS - M-12B)
102273

		Page
* 2C.7	Materials	2C-3
2C.8	Construction	2C-4
2C.9	Shell Interior Protection	2C-5
Aux Cooling Water Heat Exchangers Arrangement, Plan, and Sections		M61B4-072771-2
Section 2D - FLASH EVAPORATOR		2D-1 thru 2D-8
2D.1	General	2D-1
2D.2	Code Requirements	2D-1
2D.3	Type	2D-1
2D.4	Arrangement	2D-1
2D.5	Design Conditions	2D-2
2D.6	Guarantee	2D-3
2D.7	Performance Tests	2D-3
2D.8	Construction	2D-4
2D.9	Evaporator Shell	2D-5
2D.10	Tubes	2D-6
2D.11	Tube Sheets	2D-6
2D.12	Air Ejector Vacuum System	2D-6
2D.13	Piping and Instrument Connections	2D-6
2D.14	Shell Interior Protection	2D-8
Section 2E - DESALINATION PLANT		2E-1 thru 2E4-3
2E.1	General	2E-1
2E.2	Code Requirements	2E-1
2E.3	System Description and Arrangement	2E-1
2E.4	Design Criteria	2E-1
2E.5	Guarantees	2E-4
Subsections		
2E1	Controls	2E1-1 thru 2E1-4
2E2	Desalination Evaporator	2E2-1 thru 2E2-8
2E3	Chemical Feed Equipment	2E3-1 thru 2E3-2
2E4	Valves and Piping	2E4-1 thru 2E4-3
Section 2F - PACKAGE STEAM GENERATOR		2F-1 thru 2F-8
2F.1	General	2F-1
2F.2	Codes and Standards	2F-1
2F.3	Type	2F-1
2F.4	Design Criteria	2F-1
2F.5	Fuel	2F-2
2F.6	Guarantees and Tests	2F-2
2F.7	Boiler Shell	2F-2

* Deleted for Contract

(PLN - 6104)
(HEAT EXCHANGERS - M-12B)
102273

		Page
2F.8	Firing Equipment	2F-3
2F.9	Feedwater Flow Regulation	2F-3
2F.10	Trim and Piping	2F-4
2F.11	Base Frame	2F-5
2F.12	Motors	2F-5
2F.13	Stack	2F-5
2F.14	Cleaning and Painting	2F-5
2F.15	Protection	2F-5
Motor Specification and Data Sheets		2F-6 thru 2F-8

*** In accordance with BVI letter dated 1 May 1974, insert the following paragraph. Reference Riley Beaird letter dated 26 January 1974, Page 4 Item d.

A distillate pump shall be provided which shall operated under the same discharge head as the desalination plant distillate pump.

Section 2D - FLASH EVAPORATOR

2D.1 GENERAL. This section covers the design and construction requirements for one flash evaporator unit.

2D.2 CODE REQUIREMENTS. Except as specified otherwise herein, the evaporator and accessory equipment shall be designed and constructed in accordance with the latest applicable requirements of the ASME Boiler and Pressure Vessel Code, ANSI B31.1 Code for Pressure Piping, the standard of the Heat Exchanger Institute, and any other applicable codes and standards. All data reports and inspection certificates required by the code shall be submitted to the Engineer.

2D.3 TYPE. The evaporator shall be a horizontal, single effect flash type
* with integral deaerator, ~~brine heater~~, and vapor condenser constructed within a single shell. The evaporator will be used for startup and emergency
* supply of makeup water to the plant cycles. * The brine heater shall be either integral with or external to the evaporator shell.
The makeup to the evaporator will be chlorinated plant service water supplied from the local city water system and/or a well drilled on the site.
**

Steam from a package boiler or drum steam from the steam generator will be the heating medium.

Condensing medium will be sea water from the Java Sea.

Provisions for evaporator air extraction shall be provided with the unit.
***

A brine pump will be provided under separate specifications. The pump will be rated for the required full load brine flow.

Under normal operating conditions, heating steam condensate temperature shall not exceed 185 F at the evaporator condensate discharge.

Suitable provisions shall be included to prevent internal corrosion of the evaporator from noncondensible gases. If necessary to accomplish this, the materials used in constructing the shell and internal parts shall be of greater corrosion resistance than the specified materials. Details of the provisions included in the design to prevent internal corrosion shall be submitted.

2D.4 ARRANGEMENT. The evaporator will be located on the mezzanine floor which is between the turbine room ground floor and the turbine operating floor. A brine pump will be installed on the basement floor level which is approximately 20 feet below the mezzanine floor.

* Revised per BVI letter dated 1 May 1974.

** In accordance with BVI letter dated 1 May 1974, insert the following paragraph: The flash evaporator shall be designed and piped within the package for emergency operation. Materials shall be furnished which will permit a maximum of 100 hours per year operation with normal maintenance while using sea water as makeup.

The Owner will field apply a 1-1/2 inch thickness of insulation to the exterior surfaces of the shell, brine heater water boxes, and the brine piping. All equipment shall be arranged for clearance for this insulation.

2D.5 DESIGN CONDITIONS. The flash evaporator shall be designed and constructed in accordance with the following requirements. The performance indicated shall be guaranteed.

Capacity, net distillate output, lb per hr	12,500
Quality of distillate output, mg/l, maximum (as measured by the Tracor or flame spectrophotometer technique)	Total dissolved solids - 5.00 Silica as SiO_2 - 0.01
Steam supply at evaporator inlet	
Pressure, psi	12.5
Enthalpy, Btu/lb	1181.0 - 1194.1
Cooling water	
Source	Java Sea
Flow (at design), lb per hr	400,000
Temperature, F	85
Maximum pressure drop, psi	6
Makeup to evaporators	
Source	Service water
Temperature, F	65-100
Pressure, psi	35-60

Water analysis, mg/l (Note: Water to the service water system can vary between the two extreme analyses listed)

	Analysis 1	Analysis 2
Ca as $CaCO_3$	12	147
Mg as $CaCO_3$	8	114
Na as $CaCO_3$	331	48
HCO_3 as $CaCO_3$	254	286
SO_4 as $CaCO_3$	32	0
Cl as $CaCO_3$	65	23
CO_2 as $CaCO_3$	5	17
pH	7.7	7.3
SiO_2 as SiO_2	50	20

2D.6 GUARANTEE. The evaporator shall be guaranteed to produce distillate with an average quality as specified under DESIGN CONDITIONS. The "average" quality shall be determined by sampling and analysis of the distillate at 2 hour intervals during one continuous 24 hour operating period. The "average" quality shall be the average of the 12 samples.

2D.7 PERFORMANCE TESTS. The Owner will conduct performance tests on the flash evaporator using plant instruments to determine compliance with guarantee. These tests shall be binding between the parties to this Contract.

The Owner will calibrate the plant instruments and will take account of unmeasured quantities in a reasonable manner. The general methods outlined in the ASME Power Test Codes will be used as a guide for all testing procedures. However, code technicalities shall not invalidate the results of these tests.

Tests will be conducted at approximately the specified design conditions. The Owner will make proper corrections in the calculations to account for conditions which do not correspond with the specified design conditions.

The flash evaporator manufacturer will be given written notice of the test at least 30 days in advance of the scheduled date. The manufacturer may witness the performance test.

The test will be conducted at the expense of the Owner with the exception of the expenses incurred by the manufacturer's representative.

If the performance tests indicate that the flash evaporator fails to comply with the performance guarantee, the manufacturer shall modify the flash evaporator as required to obtain the guaranteed performance. All costs incurred by these modifications shall be the responsibility of the Contractor.

In the event the flash evaporator fails to meet the guarantee and the manufacturer has made such alternations and modification as he feels necessary to obtain the guaranteed performance, the flash evaporator shall be retested. The tests shall be conducted as previously specified. The entire expense of the additional tests, required to show the effect of such alterations and modifications shall be borne by the flash evaporator manufacturer. The "entire expense" shall be interpreted as all outside charges incurred during the retesting other than the normal operating forces of the Owner.

2D.8 CONSTRUCTION. The flash evaporator shall be constructed in accordance with the following.

2D.8.1 Design Pressures. Components shall be designed for the following pressure:

Shell	30 inch Hg vacuum to 15 psi at 320 F
Brine heater tube side	50 psi
* Brine heater shell side	135 psi
Vapor condenser tube side	275 psi

2D.8.2 Materials. The following materials satisfy the minimum requirements of construction. Alternate materials may be used provided they equal or exceed the strength and corrosion-erosion characteristics of the materials specified.

Flash evaporator shell	Carbon steel ASTM A285
Tubes	
** Brine heater	304 stainless steel ASTM A249 or 90-10 copper-nickel
Vapor condenser	90-10 copper-nickel
Water boxes	
Brine heater	Carbon steel ASTM A285
Vapor condenser	90-10 copper-nickel

*Added per Item 40 of Addendum 1
** Revised per BVI letter dated 1 May 1974

Deaerator section	18-8 stainless steel or 18-8 stainless steel lined
* ~~Deaerator trays~~	~~Type 304 stainless steel~~
Tube sheets	
Brine heater	Carbon steel ASTM A285
Vapor condenser	90-10 copper nickel
Moisture separator wire mesh	Monel
Piping connections	
2 inches and smaller	Socket weld
Brine heater water inlet	Flanged
Evaporator condenser water inlet and outlet	Flanged
All other 2-1/2 inches and larger	Butt welding
Overall dimensions	
Length, maximum	20'-0"
Height, maximum	8'-0"

2D.9 EVAPORATOR SHELL. The evaporator shell shall be of welded steel construction. Shell thickness and reinforcement shall be designed for the specified pressures with a corrosion allowance of 1/8 inch and a maximum deflection at any point of 1/8 inch. Hinged access doors shall be provided for maintenance and inspection of the internal parts of the evaporator. All necessary supports required for attachment to the structural steel of the Owner's building shall be provided.

The vapor condenser shall be provided with an air cooling zone designed to collect noncondensible gases and direct them to the air suction connection.

Steam inlet connection shall be provided with an internal impingement baffle to protect the brine heater tubes.

*Refer to Item 41 of Addendum 1

The vessel shall be equipped with gage glasses to indicate the flash chamber brine level and the vapor condenser condensate level. The gage glasses shall be reflex type and shall be complete with 600 pound carbon steel gage valves.

The flash chamber shell shall be fitted with two observation windows for observation of the brine discharge from the distribution nozzles. The windows shall have an unobstructed viewing area not less than 5 inches in diameter. A lighting fixture shall be provided near each window for illuminating the flash chamber interior. The fixtures shall be Crouse-Hinds No. EVO 2375 or acceptable equal.

The shell shall be pressure tested at the factory at 1-1/2 times the design conditions. The test shall include checking of the shell deflections and checking for leak tightness. A code stamp will not be required for the *evaporator shell, but will be required for all tube bundles.

** 2D.10 TUBES. The brine heater and vapor condenser tubes shall be straight or U-tube type and individually replaceable without disturbing other tubes.

All tubes shall be rolled into the tube sheet.

2D.11 TUBE SHEETS. Tube holes shall be arranged in a triangular pitch. Tube hole edges shall be chamfered on the shell side and each hole shall be provided with a minimum of two grooves. The bridge between the holes shall have a minimum center-to-center spacing equal to the tube OD plus 3/16 inch, or 1.25 times the nominal tube OD, whichever is greater.

2D.12 AIR EJECTOR VACUUM SYSTEM. A vacuum system to provide the initial vacuum required for startup of the flash evaporator shall be furnished. During normal operation, the ejectors shall support the vacuum maintained by the condensing action in the evaporator and shall evacuate noncondensibles from the shell.

The vacuum system shall include adequate steam operated ejectors to maintain the vacuum required in the flash chamber and a condenser to condense the steam used in the ejectors. All components of this system shall be con-
***structed of a corrosion-resistant ~~alloy~~ material acceptable to the Engineer.

As an alternate to a separate air ejector system, if practical, the vacuum system provided for the desalination plant may be extended to serve the flash evaporator when operating off steam from the package boiler. The flash evaporator will never be operated concurrently with the desalination plant.

2D.13 PIPING AND INSTRUMENT CONNECTIONS. All piping and instrument connections required for the Owner's piping and instruments shall be provided. The size, location, type and number of connections shall be as required by the Engineer.

** Revised per BVI letter dated 1 May 1974

*Revised per Item 42 of Addendum 1
***Revised per Item 43 of Addendum 1

2D.13.1 Piping Connections. Piping connections 2 inches and smaller shall be socket welding type using 3000 pound steel couplings. Piping connections 2-1/2 inches and larger shall be flanged or butt welding type.

All welding connections shall be machined in accordance with details to be furnished by the Engineer. Rough flame cuts will not be acceptable.

2D.13.2 Instrument Connections. Instrument connections for the Owner's instruments shall include, but not necessarily to be limited to, the following:

Pressure gages - 1/2 inch NPT

Cooling water inlet
Cooling water outlet
Brine heater inlet
Brine heater outlet
Brine heater shell
Flash chamber
Vapor condenser

Thermometers - 3/4 inch NPT

Cooling water inlet
Cooling water outlet
Brine heater inlet
Brine heater outlet (3)
Condensate effluent
Distillate effluent

Level controllers and level switches

* Fourteen 2 inch ~~butt~~ socket welding connections

2D.13.3 Piping. Except as otherwise specified herein, all piping shall be seamless carbon steel ASTM A53 Schedule 40.

All fittings used with steel pipe 2 inches and smaller shall be 2000 pound carbon steel socket welding type. Fittings for steel pipe 2-1/2 inches and larger shall be seamless steel butt welding type ASTM A234.

All flanges shall be forged carbon steel welding neck type.

2D.13.4 Valves. A hand operated butterfly valve shall be provided in the brine piping between the brine heater and the brine distribution header. The valve shall be provided with a positive locking device and disc position indicator.

*Revised per Item 44 of Addendum 1

(PLN - 6104)
(HEAT EXCHANGERS - M-12B)
081373

Sentinel relief valves shall be furnished as follows:

1" brine heater tube side

1" vapor condenser tube side

2" brine heater shell

*2D.14 SHELL INTERIOR PROTECTION. All interior carbon steel surfaces, including baffles and supports shall be blast cleaned using steel grit. The blast cleaning shall be done prior to any interior drilling or fabrication. The protective coating shall be continually touched up during fabrication to provide the required protection. The protective coating shall be a water soluble rust preventative material that is acceptable to the Engineer.

After fabrication is completed and before shipment, the interior shall be cleaned and thoroughly dried, after which all connections and openings shall be adequately covered and sealed to prevent the entrance of dirt or moisture during ocean shipment and prior to erection.

*Revised per Item 45 of Addendum 1

Section 2E - DESALINATION PLANT

2E.1 GENERAL. The design, performance, and construction requirements for the desalination system shall be as specified herein and the following subsections:

Subsection 2E1	CONTROLS
Subsection 2E2	DESALINATION EVAPORATOR
Subsection 2E3	CHEMICAL FEED EQUIPMENT
Subsection 2E4	VALVES AND PIPING

2E.2 CODE REQUIREMENTS. Except as specified otherwise herein, the desalination system and accessory equipment shall be designed and constructed in accordance with the latest applicable requirements of the ASME Boiler and Pressure Vessel Code, ANSI B31.1 Code for Pressure Piping, the standard of the Heat Exchanger Institute, and any other applicable codes and standards. All data reports and inspection certificates required by the code shall be submitted to the Engineer.

2E.3 SYSTEM DESCRIPTION AND ARRANGEMENT. The raw water to the desalination system will be water from the Java Sea. The water shall be strained before entering the desalination system.

The desalination system shall consist of one package type flash evaporator, complete with the necessary pumps, controls and instrumentation, and a chemical feed system. The desalination system will provide makeup water to the plant cycle. It shall operate continuously at the design flow rate until the Cycle Makeup Storage Tank is full at which time the system shall automatically shut down. When the storage tank reaches a low level, a low level alarm shall be initiated and the desalination system shall be manually started.

The evaporator shall be a horizontal, multiple stage flash type with deaerator, brine heater, and vapor condenser. The deaerator, flash chamber and evaporator condenser shall be constructed within a single shell.

Steam, controlled at approximately 12.5 psi, will be the heating medium and will be supplied from cycle extraction steam, plant auxilary steam, or package steam generator. Desuper heating equipment shall be furnished with the unit if required. The evaporator feedwater will be the condensing medium. Air suction shall be provided by steam ejectors.

* ~~Two distillate pumps and two brine~~ Pumps shall be provided in accordance with these specifications including the requirements of the pump specification sheets and the Motor Specification and Data Sheets included herein. Each pump shall be sized to handle the requirements of the desalination system at full capacity.

* The chemical feed system shall consist of ~~two subsystems: the acid feed subsystem and~~ the phosphate feed subsystem. The system shall chemically treat the evaporator feedwater to reduce its scaling tendency. Detailed specifications of the chemical feed system are presented in Subsection 2E3 of these specifications.

The desalination plant effluent will normally be pumped to a 100,000 gallon capacity Cycle Makeup Storage Tank provided by the Owner. Level controls will be provided by the Owner to shut the desalination plant down when the tank reaches high level.

A conductivity recorder will be furnished by the Owner to monitor plant effluent. An input will be furnished by the Owner to the desalination plant which shall cause the effluent to be directed to waste on high conductivity. Contacts shall be furnished to alarm high conductivity.

The entire desalination system, including the pumps and the chemical feed system shall be assembled as completely as possible into a single package for shipment.

All components shall be assembled on a common steel base plate and the unit shall be complete with ladders and access platform as required for normal operation and maintenance.

All components of the desalination system except the control panel will be located outside and shall conform to Section 1B of this specification.

2E.4 DESIGN CRITERIA. The desalination system shall be designed and constructed in accordance with the following requirements. The performance indicated shall be guaranteed.

Capacity, net distillate output, lb per hr	25,000
Quality of distillate output, mg/l maximum (as measured by the Tracor or flame spectrophotometer technique)	Total Dissolved Solids - 5.0 Silica as SiO_2 - 0.01
Number of evaporator stages, minimum	Six
Heating steam supply at evaporator inlet	10,000 lb/hr, max

* Revised per BVI letter dated 1 May 1974

Pressure, psi	12.5
Enthalpy, Btu/lb	1,180-1,285
Ejector steam supply at ejector inlet	
Pressure, psi	135
Feedwater to Evaporator	
Source	Java Sea
Temperature, F	85
Pressure at Evaporator inlet, psi	
At design flow	50
At pump shutoff	100
Distillate to storage	
Back pressure at Distillate Pump discharge, ft.	60
Brine blowdown to waste	
Back pressure at Brine Pump discharge, ft.	45
Water Analysis, mg/l	
Calcium as $CaCO_3$	1,050
Magnesium as $CaCO_3$	5,064
Sodium as $CaCO_3$	21,375
Potassium as $CaCO_3$	399
Total Alkalinity as $CaCO_3$	182
Sulfates as $CaCO_3$	1,339
Chlorides as $CaCO_3$	26,367
Silica as SiO_2	2

(PLN - 6104)
(HEAT EXCHANGERS - M-12B)
081373

The desalination system design and its performance guarantee shall be based upon the above product distillate requirement and influent conditions. The design analysis of the sea water given above is considered typical, and shall be used as a design basis. Minor variation in the sea water quality is expected; however, the desalination system effluent shall meet the above stated guarantee of quality regardless of these possible variations in influent.

2E.5 GUARANTEE. The desalination system shall be guaranteed to produce distillate with an average quality as specified under DESIGN CONDITIONS. The "average" quality shall be determined by sampling and analysis of the distillate at 2 hour intervals during one continuous 24 hour operating period. The "average" quality shall be the average of the 12 samples.

2E.6 PERFORMANCE TESTS. The Owner will conduct performance tests on the desalination system using plant instruments to determine compliance with guarantee. These tests shall be binding on the parties to this Contract.

The Owner will calibrate the plant instruments and will take account of unmeasured quantities in a reasonable manner. The general methods outlined in the ASME Power Test Codes will be used as a guide for all testing procedures. However, code technicalities shall not invalidate the results of these tests.

Tests will be conducted at approximately the specified design conditions. The Owner will make proper corrections in the calculations to account for conditions which do not correspond with the specified design conditions.

The desalination system manufacturer will be given written notice of the test at least 30 days in advance of the scheduled date. The manufacturer may witness the performance test.

The test will be conducted at the expense of the Owner with the exception of the expenses incurred by the manufacturer's representative.

If the performance tests indicate that the desalination system fails to comply with the performance guarantee, the Contractor shall modify the system as required to obtain the guaranteed performance. All costs incurred by these modifications shall be the responsibility of the Contractor.

In the event the desalination system fails to meet the guarantee and the Contractor has made such alterations and modifications as he feels necessary to obtain the guaranteed performance, the desalination system shall be retested. The tests shall be conducted as previously specified. The entire expense of the additional tests, required to show the effect of such alterations and modifications, shall be borne by the Contractor. The "entire expense" shall be interpreted as all outside charges incurred during the retesting other than the normal operating forces of the Owner.

Subsection 2E1 - CONTROLS

2E1.1 GENERAL. This section covers the control requirements of the desalination system.

2E1.2 SYSTEM REQUIREMENTS. All control equipment shall be furnished for the desalination system for a complete installation. Equipment to be furnished shall include all control switches, level switches, solenoid valves, time delay relays, relays, panels, and other accessory equipment as required.

Except for those which are specified herein to be remotely mounted, all control and accessory equipment with interconnecting piping and wiring as specified shall be furnished and installed before shipment. All controls and instrumentation and accessories to be mounted locally on the desalination plant (which is to be located outdoors) shall be of weatherproof construction suitable for marine atmosphere applications. Wiring for control and accessory equipment to be remotely mounted shall be shop installed to terminal blocks located in a weatherproof junction box mounted on the frame of the desalination equipment.

The desalination system shall be furnished with manual and automatic control. The system shall be manually started upon low level signal from the Makeup Water Storage Tank. The system shall stop automatically when a high water level in the Makeup Water Storage Tank is reached.

System effluent shall be controlled by a conductivity signal. At high conductivity, the effluent flow shall be diverted to waste. At low conductivity, the flow shall be redirected to the storage tank.

The Owner shall furnish the following inputs to the desalination system:

Makeup Water Storage Tank level low
Makeup Water Storage Tank level high
Distillate conductivity high
Distillate conductivity normal

Manual control shall override the level and conductivity signals.

All pressure, temperature, and level control systems shall be provided as required for proper operation within the desalination plant. Control

systems shall include, but shall not necessarily be limited to, the following:

* ~~Inlet feedwater control. A control valve and flow controller shall be furnished as described on the Control Valve Specification Sheets included in these specifications.~~

Feedwater heater outlet water temperature. A control valve and temperature controller shall be furnished as described on the Control Valve Specification Sheets included in these specifications. The system shall maintain a constant brine temperature from the feedwater heater by throttling the inlet steam to the feedwater heater.

Brine level. A control valve and level controller shall be furnished as described in the Control Valve Specification Sheets. The system shall maintain a constant brine level in the desalination plant.

Distillate level. A control valve and level controller shall be furnished as described in the Control Valve Specification Sheets. The system shall maintain a constant distillate level in the desalination plant.

Control valves, controllers, and positioners shall be as specified in
** Subsection ~~2D4~~. 2E4

Electrical control or devices shall be suitable for use with a 250 volt
** dc station battery ~~and~~ 240 volt ac 50 hertz. Control devices shall be as specified in Section 1B.

Motor starters, wired as indicated in Section 1B, will be furnished by the Owner.

2E1.3 INSTRUMENTS AND INSTRUMENT CONNECTIONS. Pressure gages, thermometers, and level switches furnished with the desalination plant shall include, but not necessarily be limited to, the following:

Pressure gages
Brine heater shell
Brine heater steam supply
Brine heater effluent
Ejectors steam supply
Evaporator shell, (2)
Sea water effluent
Distillate pump discharge
Brine pump discharge

*Deleted per Item 46 of Addendum 1
**Revised per Item 46 of Addendum 1

Thermometers
Brine heater shell
Brine heater steam supply
Brine heater influent
Brine heater effluent
Distillate
Flash chamber, 1 per stage
Sea water influent
Evaporator condenser, 1 per stage

Level switches
Hotwell level, (2)
Brine level, (2)
Distillate level, (2)

Pressure gages, thermometers, and level switches shall conform to the applicable requirements of Article 1B.25 of these specifications.

The instruments with appropriate nameplates shall be grouped on a panel mounted on the desalination plant frame.

A connection shall be furnished for installing the Owner's conductivity cell in the common discharge from the distillate pumps. The connection shall be suitable for a Leeds & Northrup 4905 conductivity cell.

A 3/4 inch NPT connection shall be furnished for measuring the feedwater heater outlet water temperature. The connection shall be suitable for inserting a thermowell and thermocouple furnished by the Owner.

2E1.4 DESALINATION PANEL 1. The Contractor shall furnish a panel for housing control equipment to be mounted indoors remote from the desalination plant, by the Owner.

The panel shall be a Bailey Meter Company Style QAD331, or acceptable equal, 90 inches high by 23 inches wide by 24 inches deep, totally enclosed with access door on the back.

All piping, tubing, and electrical connections will enter the panel bottom. The panel shall be designed without bottom cross bracing.

Equipment to be furnished and installed on the panel shall include, but not necessarily be limited to the following:

2 - Brine pump control switches with three indicating lights and a nameplate

2 - Distillate pump control switches each with three indicating lights and a nameplate

2 - Metering pump selector switches each with three indicating lights and a nameplate

The following equipment shall be furnished, mounted and wired to terminal blocks in the panel:

Control wiring shall be terminated at terminal blocks for connecting the Company's external leads.

All auxiliary relays, timing relays, and all other equipment not required to be mounted in the desalination plant

The requirements for painting, wiring, terminal blocks fuses, wiring diagrams, nameplates, selector switches, control switches, and indicating lights shall conform to the applicable requirements of Section 1B.

Arrangement of devices on the panel shall be acceptable to the Engineer.

Subsection 2E2 - DESALINATION EVAPORATOR

2E2.1 GENERAL. This subsection covers the design and construction requirements for the desalination evaporator.

2E2.2 CONSTRUCTION. The desalination evaporator shall be constructed
* in accordance with the following. *All surfaces of the desalination plant in contact with sea water or brine shall be 90-10 copper nickel.

2E2.2.1 Design Pressures. Components shall be designed for the following pressures:

Evaporator shell	30 inches Hg vacuum to 15 psi
Brine heater shell	15 psi
Evaporator condenser tube side	50 psi minimum
Brine heater tube side	50 psi minimum

2E2.2.2 Materials. The following materials satisfy the minimum requirements of construction. Alternate materials may be used provided they equal or exceed the strength and corrosion-erosion characteristics of the materials specified.

Flash evaporator shell	90-10 Copper Nickel
Brine heater shell	Carbon steel ASTM A285
Tubes	
Brine heater	90-10 Copper Nickel
Evaporator condenser	90-10 Copper Nickel
Water boxes	
Brine heater	90-10 Copper Nickel
Evaporator condenser	90-10 Copper Nickel
Deaerator section, if req'd	90-10 Copper Nickel
Deaerator trays, if req'd	90-10 Copper Nickel

*Reference Riley-Beaird letter dated 22 February 1974, Item a, and BVI letter dated 1 May 1974

Tube Sheets	
Brine heater	90-10 Copper Nickel or Naval Brass
Evaporator condenser	90-10 Copper Nickel or Naval Brass
Moisture separator wire mesh	Monel
Piping connections	
2 inches and smaller	Socket weld
Brine heater water inlet	Flanged
Evaporator condenser water inlet and outlet	Flanged
All other 2-1/2 inches and larger	Butt welding

All components not listed shall be of corrosion-resistant materials, subject to the acceptance of the Engineer.

2E2.3 EVAPORATOR SHELL. Shell thickness and reinforcement shall be designed for maximum deflection at any point of 1/8 inch. Hinged access manways shall be provided for maintenance and inspection of the internal parts of the evaporator.

The evaporator condenser shall be provided with air cooling zones as required, designed to collect noncondensible gases and direct them to the air suction connection.

The steam inlet connection shall be provided with an internal impingement baffle to protect the brine heater tubes.

The vessel shall be equipped with gage glasses to indicate the brine level in each stage and the evaporator condenser distillate level. The gage glasses shall be reflex type and shall be complete with 600 pound carbon steel gage valves.

The shell shall be pressure tested at the factory at 1-1/2 times the design conditions. The test shall include checking of the shell deflections and checking for leak tightness. A code stamp will not be *required for the evaporator shell, but will be required for all tube bundles.

*Revised in accordance with Item 5 of Addendum 2.

(PLN - 6104)
(HEAT EXCHANGERS - M-12B)
102273

Single pumps shall be furnished for all pumping requirements and shall be piped and wired into the package; however, one co ete assembly of each pumping unit shall be provided with the equipment, to be stored as spares.

2E2.4 TUBES. Tubes for the evaporator condenser may be the "U-tube" type; the brine heater shall be straight.

All tubes shall be rolled in the tube sheet.

2E2.5 TUBE SHEETS. Tube holes shall be arranged in accordance with manufacturer's standard but shall comply with ASME and HEI requirements.

* 2E2.6 PUMPS. ~~Two distillate pumps and two brine~~ P pumps shall be provided complete with motors and base plates. The base plates shall be mounted on the desalination plant base frame. Pump design and materials shall be the manufacturer's standard for the service specified. Pumps shall be provided with packed gland stuffing boxes where practical.

Pumps and motors shall be provided in accordance with Design Criteria and information stated on the specification sheets included as part of these specifications. Unfilled blanks shall be filled in and the completed specification sheets shall be submitted as part of the bidder's Proposal.

Each bidder shall submit characteristic curves and drawings for the pumps he proposes to furnish. The curves shall indicate head, horsepower, efficiency, and net positive suction head required, all plotted against capacity. Speed-torque curves for the pumps shall also be submitted.

2E2.7 AIR EJECTOR VACUUM SYSTEM. A vacuum system to provide the initial vacuum required for startup of the desalination plant shall be furnished. During normal operation, the ejectors shall support the vacuum maintained by the condensing action in each stage of the evaporator and shall evacuate noncondensibles from the shell.

The vacuum system shall include adequate steam operated ejectors to maintain the vacuum required in the various flash chambers and condensers to condense the steam used in the ejectors. All components of this system shall be constructed of a corrosion-resistant alloy acceptable to the Engineer.

2E2.8 CLEANING AND PROTECTION OF INTERIOR SURFACES. ~~Before shipment, the interior of the evaporator shall be thoroughly cleaned and a minimum~~
** ~~of 100 pounds of activated alumina desiccant in 25 pound bags shall be placed inside. The bags shall be secured to prevent shifting during shipment. A warning notice to remove the desiccant before placing the evaporator in operation shall be placed on each manhole cover.~~

* Revised per BVI letter dated 1 May 1974

** Refer to Item 47 of Addendum 1

*After placement of the desiccant, all connections and openings shall be covered with tight fitting sheet metal closures and all openings shall be carefully sealed with an adhesive backed waterproof cloth tape. Sealing shall be adequate to prevent air from/entering the evaporator during shipment and storage causing corrosion of the interior.

*Refer to Item 47 of Addendum 1

PUMP DESIGNATION DESALINATION DISTILLATE PUMPS

* TYPE DESIGNATION CLOSE COUPLED HORIZONTAL MOTOR PUMP

NO. TO BE FURNISHED TWO

ITEM

SPEC M-12B

PROJECT 6104

PERFORMANCE REQUIREMENTS

PUMPED LIQUID _____ SPECIFIC GRAVITY: _____ @ _____ F

TEMPERATURE: _____ F MAX _____ F MIN _____ F AT DESIGN CONDITIONS pH RANGE: _____

CAPACITY _____ GPM TOTAL HEAD, H: _____ FT MAX RPM: _____

TOTAL SUCTION PRESSURE, H_s: _____ FT (POSITIVE, NEGATIVE)

NET POSITIVE SUCTION HEAD AVAILABLE, NPSH: _____ FT FLOOR LINE DATUM ON VWPCP TYPE PUMPS

SUCTION PRESSURE RANGE: _____ FT MIN TO _____ FT MAX PLANT ELEVATION: _____ FT

PARALLEL OPERATION CAPABILITY REQUIRED: _____ (SEE REMARKS)

CONSTRUCTION REQUIREMENTS

* CASING MATERIAL: BRONZE DESIGN PRESSURE: _____ PSI DESIGN TEMPERATURE: _____ F

SHAFT MATERIAL: STAINLESS STEEL SHAFT SLEEVES: _____

IMPELLER MATERIAL: STAINLESS STEEL IMPELLER TYPE: _____ NO. OF STAGES: _____

WEARING RINGS: IMPELLER: _____ CASING: _____

SUCTION CAN (VWPCP TYPE ONLY): MATERIAL: _____ COATING: _____

CONNECTION LOCATION (VWPCP TYPE ONLY) SUCTION: _____ FLOOR, DISCHARGE: _____ FLOOR

SHAFT SEALS: STUFFING BOX: _____ MECHANICAL SEAL: _____

SEALS FOR PRESSURE: _____ VACUUM: _____ PRESSURE AND VACUUM: _____

BEARING TYPE: _____

PUMP LOCATION: _____ BASEPLATE: _____ COUPLING: _____

SUCTION STRAINER REQUIRED: _____

MOTOR REQUIREMENTS

MOTOR REQUIRED WITH PUMP: YES MOTOR SUPPLIED BY: CONTRACTOR

VOLTAGE: _____ NO. OF PHASES: _____ FREQUENCY: _____ CPS

MOTOR TYPE: _____ ENCLOSURE TYPE: _____

INSULATION CLASS: _____ SEALED: _____ ENCAPSULATED: _____

AMBIENT TEMPERATURE: _____ C TEMPERATURE RISE: _____ C SERVICE FACTOR: _____

BEARINGS: TYPE: _____ LUBRICATION: _____ AVERAGE LIFE (AFBMA) _____ YRS

CONDUIT BOX: _____ SPACE HEATERS: _____

REMARKS

* ALTERNATE CONSTRUCTION OF CAST IRON CASING, STEEL SHAFT, AND BRONZE IMPELLER

ALTERNATE PUMP TYPE TO BE HORIZONTAL FRAME MOUNTED END SUCTION WITH SHAFT COUPLING

GENERAL SERVICE CENTRIFUGAL PUMP
SPECIFICATION SHEET

BLACK & VEATCH INTERNATIONAL
CONSULTING ENGINEERS
KANSAS CITY, MO.

PERUSAHAAN UMUM LISTRIK NEGARA
AGENCY OF MINISTRY OF PUBLIC WORKS AND POWER
GOVERNMENT OF REPUBLIC OF INDONESIA
SEMARANG STEAM POWER PLANT
100 (2X50) MW
UNITS 1 & 2

2E2-5

MOTOR DESALINATION DISTILLATE PUMPS

ITEM
SPEC M-12B
PROJECT 610A

MOTOR SPECIFICATIONS

TYPE INDUCTION
QUANTITY TWO
HP SEE SEC. ID, VOLTS 380, PHASE 3, HERTZ 50, PF --
SERVICE: INDOOR --, OUTDOOR X
SERVICE FACTOR 1.0
NEMA DESIGN CLASS B
INSULATION SYSTEM: CLASS B, STANDARD --, SEALED X, ENCAPSULATED --, AMB TEMP 50 C
MOUNTING: VERTICAL --, HORIZONTAL X
SHAFT: SOLID X, HOLLOW --
ENCLOSURE: TYPE TOTALLY ENCLOSED NEMA WATERPROOF
SPACE HEATERS:
VOLTS --
PHASE --
WIRED TO SEPARATE TERMINAL BOX: YES --, NO X
INLET AIR FILTER NONE
OTHER REQUIREMENTS: AS SPECIFIED. SHALL INCLUDE MOUNTING FOR PUMP IF REQUIRED

CURRENT TRANSFORMERS NONE
SOLE PLATES: YES --, NO X
BEARINGS: TYPE ANTIFRICTION, MIN AFBMA L-10 RATED LIFE 130,000 HRS
LUBRICATION: TYPE GREASE, SYSTEM SELF-LUBRICATING
OTHER REQUIREMENTS: REGREASEABLE

TEMPERATURE DETECTORS: NONE
WIRED TO TERMINAL BLOCK IN SEPARATE DETECTOR TERMINAL BOX: YES --, NO --
WINDING:
NO. PER PHASE --
TYPE --
BEARINGS:
TYPE --
DISCHARGE AIR:
TYPE --
STARTING CONDITIONS:
BUS VOLTAGES, KV: PRIOR TO START --, MINIMUM ALLOWABLE DURING START --;
IMPEDANCES, % ON -- MVA BASE: SOURCE- -- +j -- -BUS- -- +j -- -MOTOR
OTHER REQUIREMENTS: ALL OTHER REQUIREMENTS NOT SPECIFIED ABOVE TO BE IN ACCORDANCE WITH SECTION ID.

MOTOR
SPECIFICATION AND DATA SHEET

BLACK & VEATCH INTERNATIONAL
CONSULTING ENGINEERS
KANSAS CITY, MO.

PERUSAHAAN UMUM LISTRIK NEGARA
AGENCY OF MINISTRY OF PUBLIC WORKS AND POWER
GOVERNMENT OF REPUBLIC OF INDONESIA
SEMARANG STEAM POWER PLANT
100 (2X50) MW
UNITS 1 & 2

2E2-6

PUMP DESIGNATION DESALINATION BRINE PUMPS

* TYPE DESIGNATION CLOSE COUPLED HORIZONTAL MOTOR PUMP

NO. TO BE FURNISHED TWO

ITEM

SPEC M-12B

PROJECT 6104

PERFORMANCE REQUIREMENTS

PUMPED LIQUID _____ SPECIFIC GRAVITY: _____ @ _____ F

TEMPERATURE: _____ F MAX _____ F MIN _____ F AT DESIGN CONDITIONS pH RANGE: _____

CAPACITY _____ GPM TOTAL HEAD, H: _____ FT MAX RPM: _____

TOTAL SUCTION PRESSURE, H_s: _____ FT (POSITIVE, NEGATIVE)

NET POSITIVE SUCTION HEAD AVAILABLE, NPSH: _____ FT (FLOOR LINE DATUM ON VWPCP TYPE PUMPS)

SUCTION PRESSURE RANGE: _____ FT MIN TO _____ FT MAX PLANT ELEVATION: _____ FT

PARALLEL OPERATION CAPABILITY REQUIRED: _____ (SEE REMARKS)

CONSTRUCTION REQUIREMENTS

CASING MATERIAL: BRONZE DESIGN PRESSURE: _____ PSI DESIGN TEMPERATURE: _____ F

SHAFT MATERIAL: STAINLESS STEEL SHAFT SLEEVES: _____

IMPELLER MATERIAL: STAINLESS STEEL IMPELLER TYPE: _____ NO. OF STAGES: _____

WEARING RINGS: IMPELLER: _____ CASING: _____

SUCTION CAN VWPCP TYPE ONLY : MATERIAL: _____ COATING: _____

CONNECTION LOCATION VWPCP TYPE ONLY: SUCTION: _____ FLOOR, DISCHARGE: _____ FLOOR

SHAFT SEALS: STUFFING BOX: _____ MECHANICAL SEAL: _____

SEALS FOR PRESSURE: _____ VACUUM: _____ PRESSURE AND VACUUM: _____

BEARING TYPE: _____

PUMP LOCATION: _____ BASEPLATE: _____ COUPLING: _____

SUCTION STRAINER REQUIRED: _____

MOTOR REQUIREMENTS

MOTOR REQUIRED WITH PUMP: YES MOTOR SUPPLIED BY: CONTRACTOR

VOLTAGE: _____ NO. OF PHASES: _____ FREQUENCY: _____ CPS

MOTOR TYPE: _____ ENCLOSURE TYPE: _____

INSULATION CLASS: _____ SEALED: _____ ENCAPSULATED: _____

AMBIENT TEMPERATURE: _____ C TEMPERATURE RISE: _____ C SERVICE FACTOR: _____

BEARINGS: TYPE: _____ LUBRICATION: _____ AVERAGE LIFE (AFBMA) _____ YRS

CONDUIT BOX: _____ SPACE HEATERS: _____

REMARKS

* ALTERNATE PUMP TYPE TO BE HORIZONTAL FRAME MOUNTED END SUCTION WITH SHAFT COUPLING

GENERAL SERVICE CENTRIFUGAL PUMP
SPECIFICATION SHEET

BLACK & VEATCH INTERNATIONAL
CONSULTING ENGINEERS
KANSAS CITY, MO

PERUSAHAAN UMUM LISTRIK NEGARA
AGENCY OF MINISTRY OF PUBLIC WORKS AND POWER
GOVERNMENT OF REPUBLIC OF INDONESIA
SEMARANG STEAM POWER PLANT
100 MW X 50 MW
UNITS 1 & 2

2E2-7

MOTOR DESALINATION BRINE PUMPS

ITEM
SPEC M-12B
PROJECT 6104

MOTOR SPECIFICATIONS

TYPE INDUCTION
QUANTITY TWO
HP SEE SEC. ID, VOLTS 380, PHASE 3, HERTZ 50, PF --
SERVICE: INDOOR --, OUTDOOR X
SERVICE FACTOR 1.0
NEMA DESIGN CLASS B
INSULATION SYSTEM: CLASS B, STANDARD --, SEALED X, ENCAPSULATED --, AMB TEMP 50 C
MOUNTING: VERTICAL --, HORIZONTAL X
SHAFT: SOLID X, HOLLOW --
ENCLOSURE: TYPE TOTALLY ENCLOSED NEMA WATERPROOF
SPACE HEATERS:
VOLTS 240
PHASE SINGLE, 50 HERTZ
WIRED TO SEPARATE TERMINAL BOX: YES --, NO X
INLET AIR FILTER NONE
OTHER REQUIREMENTS: AS SPECIFIED. SHALL INCLUDE MOUNTING FOR PUMP IF REQUIRED.

CURRENT TRANSFORMERS NONE
SOLE PLATES: YES --, NO X
BEARINGS: TYPE ANTIFRICTION, MIN AFBMA L-10 RATED LIFE 130,000 HRS
LUBRICATION: TYPE GREASE, SYSTEM ~~SELF-LUBRICATING~~
OTHER REQUIREMENTS: REGREASEABLE

TEMPERATURE DETECTORS: NONE
WIRED TO TERMINAL BLOCK IN SEPARATE DETECTOR TERMINAL BOX: YES --, NO --
WINDING:
NO. PER PHASE --
TYPE --
BEARINGS:
TYPE --
DISCHARGE AIR:
TYPE --
STARTING CONDITIONS:
BUS VOLTAGES, KV: PRIOR TO START --, MINIMUM ALLOWABLE DURING START --;
IMPEDANCES, % ON -- MVA BASE: SOURCE- -- +j -- -BUS- -- +j -- -MOTOR
OTHER REQUIREMENTS: ALL OTHER REQUIREMENTS NOT STATED ABOVE TO BE IN ACCORDANCE WITH SECTION ID.

MOTOR
SPECIFICATION AND DATA SHEET

BLACK & VEATCH INTERNATIONAL
CONSULTING ENGINEERS
KANSAS CITY, MO.

PERUSAHAAN UMUM LISTRIK NEGARA
AGENCY OF MINISTRY OF PUBLIC WORKS AND POWER
GOVERNMENT OF REPUBLIC OF INDONESIA
SEMARANG STEAM POWER PLANT
100 (2X50) MW
UNITS 1 & 2

2E2-8

Subsection 2E3 - CHEMICAL FEED EQUIPMENT

2E3.1 GENERAL. This subsection covers the design and construction requirements of the chemical feed system.

* 2E3.2 SYSTEM DESCRIPTION. The chemical feed system shall consist of two subsystems: the acid feed subsystem and the phosphate feed subsystem.
* with provisions for acid cleaning.

* The acid feed subsystem shall be used to reduce the alkalinity of the sea water influent to the desalination plant to 20 mg/l.

The acid feed subsystem shall consist of an acid tank, a metering pump, and all necessary controls and instrumentation. When dilution of the 66° Baumé sulfuric acid is necessary to obtain a better metering efficiency, a mixer shall also be provided.

The phosphate feed subsystem shall consist of a solution tank, a mixer, one metering pump, and all necessary controls and instrumentation.

2E3.2.1 Solution Tanks. The solution tanks shall be constructed of polypropylene and shall have an effective volume of not less than 50 gallons. The top shall be completely covered, with flanged connection for the mixer and a hinged charging door. A dissolving basket shall be provided for the phosphate solution tank.

2E3.2.2 Mixers. The mixer for the phosphate tank shall have a tank mounting bracket and a stainless steel shaft and propeller. The mixer shall have a motor designed in accordance with requirements of Subsection 1D1 for operation on 220 volt, single phase, 50 hertz current. The motor shall be complete with three wire cord and plug and on-off toggle switch built into the motor.

* If a mixer shall be required for the acid tank, it shall have the same specifications as that required for the phosphate tank except that the shaft and propeller shall be constructed of Hastelloy B.

* 2E3.2.3 Metering Pump~~s~~. ~~Two~~ A positive displacement diaphragm type metering pump~~s~~ shall be furnished for the chemical feed system. Each pump shall utilize a Teflon diaphragm with other materials of construction suitable for the service. The design pressure shall be adequate for system requirements, with factory set internal relief valves set at approximately 20 per cent greater than the normal discharge pressure. Back pressure valves shall be furnished.

Each pump capacity shall be adequate to provide the required chemical concentration in the evaporator feedwater under all operating conditions.

* Pump motors shall be furnished for ~~both~~ pumps. Motors shall conform to the requirements stipulated in Subsection 1D1.

* Revised per BVI letter dated 1 May 1974

* 2E3.2.4 Pump Interconnection. The two chemical metering pumps shall be installed so that one pump takes suction from the phosphate solution tank and the other from the acid solution tank. However, interconnection shall be provided so that both pumps can take suction from either the phosphate or acid tank and the combined discharge routed to the proper injection point.

* 2E3.2.5 Controls. A level switch shall be provided for ~~each~~ the solution tank
* to provide annunciation and pump shutoff on low liquid level. ~~Each~~ The pump motor shall be supplied with a manual on-off switch mounted on the desalination system control panel.

The level switch shall be a B/W Controller Corporation probe electrode type. Electrode holders shall be stainless steel, designed for flange mounting. Relays shall be furnished in NEMA 4 enclosures. Electrodes shall be constructed of materials suitable for the service, with material selection subject to the acceptance of the engineer.

* Revised per BVI letter dated 1 May 1974

Section 2E4 - VALVES AND PIPING

2E4.1 GENERAL. This section covers the requirements for all valves and pipe to be utilized in the desalination system. Valves and piping design and materials shall be manufacturer's standard for the performance specified, but shall conform wherever practicable to the requirements specified in this section.

2E4.2 VALVES.

2E4.2.1 Control Valves. For each control valve to be furnished, bidders shall submit with their proposals a control valve data sheet similar to the Control Valve Specification Sheet included with these specifications. The manufacturer and model number of the valve and accessories shall be filled out to fully describe the equipment offered. Valves and accessories shall be as manufactured by Fisher Controls Company, or acceptable equal.

2E4.2.2 General Service Valves. General service valves shall be as manufactured by Edward, Crane, Powell, Hancock, Walworth, or acceptable equal.

Bronze gate, globe and check valves shall have union type bonnet joints. All gate and globe valves shall have inside screw, rising stem construction.

All steel body valves 2 inches and smaller shall be Class 600 pound, with forged steel bodies with pressure seal, integral, or flanged type bonnets. Gate and glove valves shall have outside screw and yoke construction.

All iron or steel body valves 2-1/2 inches and larger shall have outside screw and yoke design with flanged type bonnet joints.

2E4.3 PIPING AND INSTRUMENT CONNECTIONS. All piping and instrument connections required for the Owner's piping and instruments shall be provided. The size, location, type and number of connections shall be as required by the Engineer.

2E4.3.1 Piping. Except as otherwise specified herein, all piping shall be seamless carbon steel ASTM A53 Schedule 40.

All fittings used with steel pipe 2 inches and smaller shall be 2000 pound carbon steel socket welding type. Fittings for steel pipe 2-1/2 inches and larger shall be seamless steel butt welding type ASTM A234.

All flanges shall be forged carbon steel welding neck type.

Brine and sea water piping within the plant package shall be 90-10 Cu-Ni in accordance with the manufacturer's standard.

BEST AVAILABLE COPY

2E4.3.2 Piping Connections. Piping connections 2 inches and smaller shall be socket welding type using 3000 pound steel couplings. Piping connections 2-1/2 inches and larger shall be flanged or butt welding type.

End preparation for butt welding joints shall be machined in accordance with weld end details to be furnished by the Engineer.

2E4.4 INSULATION. Insulation and jacketing will be furnished and field applied by the Owner.

VALVE DESCRIPTION

Flow Diagram _____ Number Required _____ Valve Tag _____

Service _____

Fluid _____ Sp Gr _____ Viscosity _____ ssu @ _____ F

VALVE DESIGN

	Design	Low
Flow Rate		
Inlet Pressure		
Inlet Temperature		
Outlet Pressure		
Percent Travel		
Preferred		
Predicted		
Inner Valve Type		

Maximum Differential Pressure _____ Maximum Temperature _____

VALVE CONSTRUCTION

Body Type _____

Body Pressure Class _____

Body Material _____

Body Ends _____

Preferred Body Size _____

Guide Location _____

Cooling Fins _____

Materials:

Plug _____

Seat Ring _____

Guide Posts _____

Bushings _____

Stem _____

Packing _____

VALVE OPERATOR

Type _____

Signal Range _____

Valve Action:

Flow _____

Spring _____

Signal Increase _____

Accessories:

Positioner _____

Limit Switch _____

Handjack _____

Stops _____

Air Lock _____

PRESSURE CONTROLLER

Type _____

Adjustable Range _____

Maximum Pressure _____

Mounting _____

Signal Range _____

Reset or Rate _____

TEMPERATURE CONTROLLER

Type _____

Adjustable Range _____

Maximum Press. and Temp. _____

Mounting _____

Capillary Length _____

Pipe Connection _____

Reset or Rate _____

LEVEL CONTROLLER

Type _____

Adjustable Range _____

Cage Connections _____

Pressure Class _____

Signal Range _____

Cooling Fins _____

Gauge Glasses _____

Reset or Rate _____

REMARKS _____

CONTROL VALVE SPECIFICATION SHEET

BEST AVAILABLE COPY

BLACK & VEATCH INTERNATIONAL
CONSULTING ENGINEERS
KANSAS CITY, MO.

PERUSAHAAN UMUM LISTRIK NEGARA
AGENCY OF MINISTRY OF PUBLIC WORKS AND POWER
GOVERNMENT OF REPUBLIC OF INDONESIA
SEMARANG STEAM POWER PLANT
100 (2X50) MW
UNITS 1 & 2

2E4-3

Section 2F - PACKAGE STEAM GENERATOR

2F.1 GENERAL. This section covers the design, performance, and construction requirements for the auxiliary package steam generator.

2F.2 CODES AND STANDARDS. All equipment and materials shall be designed, fabricated, and constructed in accordance with the latest applicable requirements of the ASME Boiler and Pressure Vessel Code; National Electric Code; the Standards of ANSI, NEMA, EEI, IEEE, ASTM, NFPA, and ABMA. Manufacturer's Data Reports as required by the ASME Code and certificate of inspection by an inspection and insurance company acceptable to the Engineer shall be submitted to the Engineer in triplicate. Combustion safeguard equipment shall meet the requirements of FM, FIA, NFPA, and UL. The steam generator shall bear a UL label and stamp.

2F.3 TYPE. The steam generator shall be of the packaged, factory assembled, bottom supported, multipass, firetube type with integrally mounted burner, fan, controls, and accessories required for a complete unit.

The steam generator will be installed outdoors in an unprotected location and shall be suitable for such outdoor installation during all types of weather to be experienced at the plant site. Where required, equipment and accessories shall be provided with special weatherproof construction as specified in Section 1B under WEATHERPROOFING.

2F.4 DESIGN CRITERIA. The steam generator shall be designed and constructed in accordance with the following requirements. The performance indicated shall be guaranteed.

Nominal horsepower rating, hp	400
Outlet steam conditions	
Pressure, psi	135
Temperature, F	358.4
Flow, lb/hr	13,800
Maximum moisture content, per cent	1
Feedwater temperature, F	85

(PLN - 6104)
(HEAT EXCHANGERS - M-12B)
102273

Ambient air temperature	
Maximum, F	120
Minimum, F	60
Site elevation, ft above sea level	12
Minimum design pressure, psi	175
Minimum fire side heating surface per horsepower, sq ft	5

2F.5 FUEL. The steam generator will be fired with No. 2 fuel oil supplied at approximately 85 F and 200 psi.

The unit shall operate on this fuel at the specified capacities without reduction in availability, undue maintenance, or other operating difficulties.

2F.6 GUARANTEES AND TESTS. The steam generator shall be guaranteed to perform as specified herein. The equipment shall operate safely and reliably and without undue maintenance or operator attention. The guarantees shall be such as can be met in everyday operation under all specified operating conditions.

The performance of the unit shall be guaranteed when firing No. 2 fuel oil at the continuous rating. The overall efficiency shall be guaranteed to be as specified and as stated in the performance data.

The steam conditions at the boiler outlet shall be guaranteed to be obtainable with normal surface conditions in the boiler.

2F.7 BOILER SHELL. The boiler shall be fabricated form steel plate and shall be of welded construction. The unit shall have adequate cleanout doors and openings to provide full access to all surfaces exposed to fire. Provisions shall be made for tube cleaning and tube removal from the burner end of the unit.

All refractory, insulation, and lagging shall be factory installed.

The unit shall be arranged so that tubes may be exposed for cleaning without removal of equipment or refractory.

All necessary connections, including connections for feedwater inlet, steam outlet, blowoff, sampling, and safety valves, shall be provided in accordance with code requirements.

2F.8 FIRING EQUIPMENT. The steam generator shall be provided with a system of oil firing equipment, including burner, pilot, forced draft fan, flame safeguard system, combustion control system, and all other equipment and devices required for a complete firing system. The firing equipment shall be the manufacturer's standard system except as otherwise specified herein.

The entire system shall be completely factory assembled and tested.

* 2F.8.1 Burner. The burner shall be of the low pressure air atomizing or mechanical atomizing type and shall be complete with all required accessory equipment.

2F.8.2 Flame Safeguard System. A complete system of flame safety and safety interlock equipment shall be furnished. A complete description of the system shall be submitted to the Engineer for review.

2F.8.3 Combustion Control System. A complete automatic combustion control system shall be furnished to maintain set steam pressure and to regulate fuel and air flow. The system shall be of the modulating type. A complete description of the system shall be submitted to the Engineer for review.

2F.8.4 Controls and Instrumentation. The manufacturer's standard complement of controls and instrumentation shall be furnished. All indicating lights, control switches, annunciators, and other control components shall be mounted in a fabricated enclosed control panel on the steam generator. A complete system of annunciation and trip devices shall be provided for protection of the steam generator. A complete description of the controls and instrumentation shall be submitted to the Engineer for review.

The controls and control circuits shall be suitable for use with 240 volt, 50 Hz, single phase power supply. Control transformers of adequate capacity shall be included in the control panel. The control transformer secondary shall be fused and grounded. All motor starters, controls, and interlocks associated with the unit shall be installed in the control panel. Starters for three phase motors shall have three overload units. Electrical service to the control panel will be 416 volt, 50 Hz, 3 phase. The main circuit breaker shall be three pole, 600 volt, thermal-magnetic type.

All control equipment shall be especially designed for package steam generator use and shall be approved by the Underwriters' Laboratories and Factory Mutual. All electrical wiring shall conform to National Electrical Code.

2F.9 FEEDWATER FLOW REGULATION. A complete system for feedwater flow regulation shall be furnished, including feedwater pump, feedwater tank, all valves, piping and sensing elements. A complete description of the system shall be submitted to the Engineer for review.

* Revised per BVI letter dated 1 May 1974

2F.9.1 Feedwater Pump. One feedwater pump, to supply water as required by the boiler, shall be furnished complete with motor, shaft coupling guard, and full-length base plate. The base plate shall be provided with drainage grooves and a raised edge. The feed pump shall be mounted to the boiler unit base frame, or alternately to the desalination evaporator base frame.

Each bidder shall submit characteristic curves for the pumps he proposes to furnish. The curves shall show head, horsepower, and efficiency all plotted against capacity.

2F9.2 Feedwater Tank. A feedwater tank of welded steel construction with adequate volume shall be furnished. The tank shall be complete with gage glass, float controlled valve sized for 5 to 100 per cent make-up water, and supporting frame to place the tank at the proper height for efficient feed pump operation. Additionally, the height chosen shall provide gravity drain of the condensate from the desalination brine heater into the feedwater tank. The tank may be mounted on the boiler frame or alternately may be mounted on the base frame of the desalination evaporator. Connection points for condensate returns from other equipment will be required.

2F.10 TRIM AND PIPING. All trim and piping required for a complete operating steam generating unit shall be furnished. This shall include all piping, valves, and accessories integral to or between any equipment supplied with the steam generator. Trim and piping shall be the manufacturer's standard except as specified otherwise herein.

* All piping connections 2 inches and smaller shall be socket welding type and all piping connections 2-1/2 inches and larger shall be flanged or butt welding type except that fuel piping may be threaded. All piping shall be steel. All threaded and socket welding fittings shall be forged steel, 2000 psi pressure class minimum. All flanges shall be steel.

* All water and steam valves shall be forged or cast steel. All steam and water connections shall be valved.

A complete fuel piping train shall be furnished including all valves, strainers, pressure regulators, relief valves, and other accessories required for control and shutoff of the fuel. All piping shall be neatly and compactly arranged on the burner front.

2F.10.1 Safety Valves. The steam generator shall be equipped with all safety valves required to meet the requirements of the ASME Boiler and Pressure Vessel Code. Gags shall be provided for all valves.

2F.10.2 Feedwater Valves. One stop valve and one check valve shall be furnished for the feedwater inlet to the boiler. The interconnecting piping

* Revised for Contract. Manufacturer's standard is acceptable, but shall conform wherever practicable to the requirements specified herein.

and fittings between the valves and the boiler shall be furnished. The stop valve shall be located to permit convenient operation. The location of the valves and routing of the interconnecting piping shall be acceptable to the Engineer.

2F.10.3 Steam Drum Outlet Valves. The steam outlet shall be provided with a
* stop check valve and a stop valve. with a valved drain between them.

2F.10.4 Blowdown Valves. Blowdown valves shall be furnished for each blowdown connection in accordance with the ASME Code.

2F.10.5 Gage Glasses. Gage glass assemblies shall be furnished in accordance with the ASME Code. Blowdown valves shall be located for operation from the floor level. Chainwheel operated shutoff valves shall be furnished and shall have sufficient chain for operation from floor level.

2F.10.6 Pressure Gages. A drum pressure gage shall be furnished installed on the steam generator at the operating level complete with shutoff and blowdown valves and piping.

A pressure gage with shutoff valve shall be provided in the fuel oil supply train.

Gages shall be in accordance with Section 1B except the drum pressure gage shall be a 6 inch Ashcroft No. 1379 Durogauge. Each gage shall be furnished with an Ashcroft No. 7001 gage valve.

2F.11 BASE FRAME. The unit shall be furnished with a rigid fabricated steel base frame. The base frame shall be designed and constructed to give a neat, smooth, streamlined appearance. No additional base supporting steel shall be required.

2F.12 MOTORS. All motors required for the steam generator auxiliaries shall be furnished in accordance with the Motor Specification and Data Sheets included at the end of this section and Section 1D of these specifications.

2F.13 STACK. The steam generator shall be provided with a flanged stack connection for extension by the Owner.

2F.14 CLEANING AND PAINTING. The steam generator shall be thoroughly cleaned and shop primed in accordance with the requirements stated in Section 1B. The heat transfer surfaces shall be protected against corrosion during shipment and storage by a method acceptable to the Engineer.

2F.15 PROTECTION. The steam generator and auxiliaries shall be prepared for shipment in accordance with the requirements stated in Section 1B under PACKAGING and under PROTECTION.

* Revised for Contract

MOTOR PACKAGE STEAM GENERATOR FEED PUMP

ITEM
SPEC M-12B
PROJECT 6104

MOTOR SPECIFICATIONS

TYPE INDUCTION
QUANTITY ONE
HP SEE SECTION 1D, VOLTS 380, PHASE 3, HERTZ 50, PF --
SERVICE: INDOOR --, OUTDOOR X
SERVICE FACTOR 1.0
NEMA DESIGN CLASS B
INSULATION SYSTEM: CLASS B, STANDARD --, SEALED X, ENCAPSULATED --, AMB TEMP 50 C
MOUNTING: VERTICAL --, HORIZONTAL X
SHAFT: SOLID X, HOLLOW
ENCLOSURE: TYPE TOTALLY ENCLOSED FAN COOLED NEMA WATERPROOF
SPACE HEATERS:
VOLTS 240
PHASE SINGLE, 50 HERTZ
WIRED TO SEPARATE TERMINAL BOX: YES --, NO X
INLET AIR FILTER NONE
OTHER REQUIREMENTS: AS SPECIFIED. SHALL INCLUDE MOUNTING FOR PUMP IF REQUIRED.

CURRENT TRANSFORMERS NONE
SOLE PLATES: YES --, NO X
BEARINGS: TYPE ANTIFRICTION, MIN AFBMA L-10 RATED LIFE 130,000 HRS
LUBRICATION: TYPE GREASE, SYSTEM SELF-LUBRICATING
OTHER REQUIREMENTS: REGREASEABLE

TEMPERATURE DETECTORS: NONE
WIRED TO TERMINAL BLOCK IN SEPARATE DETECTOR TERMINAL BOX: YES --, NO --
WINDING:
NO. PER PHASE --
TYPE --
BEARINGS:
TYPE --
DISCHARGE AIR:
TYPE --
STARTING CONDITIONS:
BUS VOLTAGES, KV: PRIOR TO START --, MINIMUM ALLOWABLE DURING START --;
IMPEDANCES, % ON -- MVA BASE: SOURCE- -- +j -- -BUS- -- +j -- -MOTOR
OTHER REQUIREMENTS: ALL OTHER REQUIREMENTS NOT SPECIFIED ABOVE TO BE IN ACCORDANCE WITH SECTION 1D.

MOTOR
SPECIFICATION AND DATA SHEET

BLACK & VEATCH INTERNATIONAL
CONSULTING ENGINEERS
KANSAS CITY, MO.

PERUSAHAAN UMUM LISTRIK NEGARA
AGENCY OF MINISTRY OF PUBLIC WORKS AND POWER
GOVERNMENT OF REPUBLIC OF INDONESIA
SEMARANG STEAM POWER PLANT
100 (2X50) MW
UNITS 1 & 2

MOTOR PACKAGE STEAM GENERATOR FD FAN

ITEM
SPEC M-12B
PROJECT 6104

MOTOR SPECIFICATIONS

TYPE INDUCTION
QUANTITY ONE
HP SEE SECTION 1D, VOLTS 380, PHASE 3, HERTZ 50, PF --
SERVICE: INDOOR --, OUTDOOR X
SERVICE FACTOR 1.0
NEMA DESIGN CLASS B
INSULATION SYSTEM: CLASS B, STANDARD --, SEALED X, ENCAPSULATED --, AMB TEMP 50 C
MOUNTING: VERTICAL --, HORIZONTAL X
SHAFT: SOLID X, HOLLOW
ENCLOSURE: TYPE TOTALLY ENCLOSED FAN COOLED NEMA WATERPROOF
SPACE HEATERS:
VOLTS 240
PHASE SINGLE, 50 HERTZ
WIRED TO SEPARATE TERMINAL BOX: YES --, NO X
INLET AIR FILTER NONE
OTHER REQUIREMENTS: AS SPECIFIED

CURRENT TRANSFORMERS NONE
SOLE PLATES: YES --, NO X
BEARINGS: TYPE ANTIFRICTION, MIN AFBMA L-10 RATED LIFE 130,000 HRS
LUBRICATION: TYPE GREASE, SYSTEM SELF-LUBRICATING
OTHER REQUIREMENTS: REGREASEABLE

TEMPERATURE DETECTORS: NONE
WIRED TO TERMINAL BLOCK IN SEPARATE DETECTOR TERMINAL BOX: YES --, NO --
WINDING:
NO. PER PHASE --
TYPE --
BEARINGS:
TYPE --
DISCHARGE AIR:
TYPE --
STARTING CONDITIONS:
BUS VOLTAGES, KV: PRIOR TO START --, MINIMUM ALLOWABLE DURING START --;
IMPEDANCES, % ON -- MVA BASE: SOURCE- -- +j -- -BUS- -- +j -- -MOTOR
OTHER REQUIREMENTS: ALL OTHER REQUIREMENTS NOT STATED ABOVE TO BE IN ACCORDANCE WITH SECTION 1D.

MOTOR
SPECIFICATION AND DATA SHEET

BLACK & VEATCH INTERNATIONAL
CONSULTING ENGINEERS
KANSAS CITY, MO.

PERUSAHAAN UMUM LISTRIK NEGARA
AGENCY OF MINISTRY OF PUBLIC WORKS AND POWER
GOVERNMENT OF REPUBLIC OF INDONESIA
SEMARANG STEAM POWER PLANT
100 (2X50) MW
UNITS 1 & 2

P-EL-116

MOTOR PACKAGE STEAM GENERATOR AIR COMPRESSOR

ITEM
SPEC M-12B
PROJECT 6104

MOTOR SPECIFICATIONS

TYPE INDUCTION
QUANTITY ONE
HP SEE SECTION 1D, VOLTS 380, PHASE 3, HERTZ 50, PF —
SERVICE: INDOOR --, OUTDOOR X
SERVICE FACTOR 1.0
NEMA DESIGN CLASS B
INSULATION SYSTEM: CLASS B, STANDARD --, SEALED X, ENCAPSULATED —, AMB TEMP 50
MOUNTING: VERTICAL --, HORIZONTAL X
SHAFT: SOLID X, HOLLOW --
ENCLOSURE: TYPE TOTALLY ENCLOSED FAN COOLED NEMA WATERPROOF
SPACE HEATERS:
VOLTS 240
PHASE SINGLE, 50 HERTZ
WIRED TO SEPARATE TERMINAL BOX: YES --, NO X
INLET AIR FILTER NONE
OTHER REQUIREMENTS:

CURRENT TRANSFORMERS NONE
SOLE PLATES: YES --, NO X
BEARINGS: TYPE ANTIFRICTION, MIN AFBMA L-10 RATED LIFE 130,000 HRS
LUBRICATION: TYPE GREASE, SYSTEM SELF-LUBRICATING
OTHER REQUIREMENTS: REGREASEABLE

TEMPERATURE DETECTORS: NONE
WIRED TO TERMINAL BLOCK IN SEPARATE DETECTOR TERMINAL BOX: YES —, NO —
WINDING:
NO. PER PHASE --
TYPE --
BEARINGS:
TYPE --
DISCHARGE AIR:
TYPE --
STARTING CONDITIONS:
BUS VOLTAGES, KV: PRIOR TO START --, MINIMUM ALLOWABLE DURING START —;
IMPEDANCES, % ON — MVA BASE: SOURCE- -- +j -- -BUS- -- +j -- -MOTOR
OTHER REQUIREMENTS: ALL OTHER REQUIREMENTS NOT SPECIFIED ABOVE TO BE IN ACCORDANCE WITH SECTION 1D.

MOTOR
SPECIFICATION AND DATA SHEET

BLACK & VEATCH INTERNATIONAL
CONSULTING ENGINEERS
KANSAS CITY, MO.

PERUSAHAAN UMUM LISTRIK NEGARA
AGENCY OF MINISTRY OF PUBLIC WORKS AND POWER
GOVERNMENT OF REPUBLIC OF INDONESIA
SEMARANG STEAM POWER PLANT
100 (2X50) MW
UNITS 1 & 2

APPENDIX

PERUSAHAAN UMUM LISTRIK NEGARA

SEMARANG STEAM POWER PLANT

SPECIFICATIONS AND DOCUMENTS
FOR
HEAT EXCHANGERS

SPECIFICATION 6104 - M-12B

ADDENDUM 1
November 14, 1973

Each bidder shall note these revisions to the specifications and documents and incorporate these revisions in his proposal. Each bidder shall attach a signed acknowledged copy of this entire addendum in the front of the specifications and documents submitted with his proposal.

This addendum consists of nine pages and revised Pages C-1, C-2, C-3, D-18, and D-21.

1. Page A-1. In the third line of the fifth paragraph, change the last word from "disqualification" to "rejection".

2. Page A-1. Add the words "and documents" following the word "specifications" in the first line of the last paragraph.

3. Page A-2. Delete the first paragraph and insert in its place the following revised paragraph:

   "Copies of the specifications and documents obtained in the United States require a deposit of $5.00; those obtained in Indonesia require a deposit of Rp 2,000. Deposits will not be refunded."

4. Page A-2. Add the words "and documents" following the word "specifications" in the second paragraph.

   Add the words "and documents" following the word "specifications" in the second sentence of the fourth paragraph.

5. Page A-2. In the second line of the fifth paragraph, delete the word "within" and substitute the phrase "for a period of".

6. Page A-2. Revise the first sentence of the last paragraph to read:

"The Perusahaan Umum Listrik Negara reserves the right to accept the proposal which, in its judgment, is the lowest responsive proposal submitted by a qualified bidder."

7. Page B 3, Article B.4.1. Revise the second paragraph to read as follows:

"The bidder shall not alter any part of these specifications and documents in any way."

8. Page B-4, Article B.4.3. Change the spelling of the name of the Owner's Director of Construction to read:

"Ir. Bagoes Moedijantoro"

9. Page B-5, Article B.4.4. Delete the second paragraph and insert the following:

"Unless otherwise specified, proposals shall be for the complete scope of the work specified in these specifications and documents. Proposals for individual components of the work will be considered only to the extent such partial scope of supply is specifically stipulated in the INVITATION TO BIDDERS and the PROPOSAL sections included as a part of these specifications and documents."

10. Page B-5, Article B.4.5. In the last line of this article, change the phrase "within 150 days" to read "for a period of 100 days".

11. Page B-5, Article B.6. In the third paragraph, sixth line, change "150 days" to read "100 days".

12. Page B-7, Article B.13. Revise the first sentence in the first paragraph to read:

"The Owner reserves the right to accept the proposal which, in its judgment, is the lowest responsive proposal submitted by a qualified bidder."

13. Page B-8, Article B.15. Delete this article in its entirety and insert the following:

"B.15 EVALUATION. Proposals will be evaluated on the basis of the fas lump sum price bid for each of the two categories of equipment and materials independently as specified.

The delivery date stipulated in Article 1A.6 must be met by the successful bidder and must be acknowledged in the proposal submitted."

14. Page C-1. Delete entire page and replace with revised Page C-1 attached to this addendum.

15. Page C-2. Delete entire page and replace with revised Page C-2 attached to this addendum.

16. Page C-3. Delete entire page and replace with revised Page C-3 attached to this addendum.

17. Page D-5, Article D.4. Add the following paragraph at the end of the article:

"The bidder shall submit a list of recommended spare parts needed for a three year period of operation and estimated total FAS cost, plus estimated freight charges. The successful bidder only will be required to submit a complete listing with individual prices."

18. Pages D-18 and D-21. Delete these pages in their entirety and replace with revised Pages D-18 and D-21 attached to this addendum.

19. Page GC-3, Article GC.2. Delete Subarticle 15 at top of page in its entirety.

20. Page GC-4, Article GC.7. Delete entire article and replace with the following revised article:

"GC.7 ASSIGNMENT AND SUBCONTRACTING. The Contractor shall not assign or subcontract the work, or any part thereof, without the previous written consent of the Owner, Engineer, and AID, nor shall he assign, by power of attorney or otherwise, any of the money payable under this Contract unless written consent of the Owner has been obtained. No right under this Contract, nor claim for any money due or to become due hereunder shall be asserted against the Owner, or persons acting for the Owner, by reason of any so-called assignment of this Contract or any part thereof, unless such assignment has been authorized by the written consent of the Owner and AID. In case the Contractor is permitted to assign moneys due or to become due under this Contract, the instrument of assignment shall contain a clause subordinating the claim of the assignee to all prior liens for services rendered or materials supplied for the performance of the work.

Should any subcontractor fail to perform in a satisfactory manner the work undertaken by him, his subcontract shall be immediately terminated by the Contractor upon notice from the Owner. The Contractor shall be as fully responsible and accountable to the Owner for the acts and omissions of his subcontractors, and of persons either directly or indirectly employed by them, as he is for the acts and omissions of persons directly employed by him. Nothing contained in this Contract shall create any contractual relation between any subcontractor and the Owner."

21. Page GC-5, Article GC.8. Delete this article in its entirety and substitute the following:

"GC.8 ORAL AND WRITTEN STATEMENTS. It is understood and agreed that the written terms and provisions of this Contract shall supersede all oral and written statements made by either party to this Contract prior to entering into contract. Written statements made by either party prior to entering into contract and oral statements shall not be effective or be construed as being a part of this Contract."

22. Page GC-6, Article GC.11. Delete the first paragraph at the top of this page.

23. Page GC-6, Article GC.12. In the third paragraph, second line, delete the word "perfor" and substitute the word "perform".

24. Page GC-6, Article GC.13. Revise the sixth and seventh lines of this article to read:

"Contractor or any of his property; or if at any time the work under this Contract"

25. Page GC-7, Article GC.16. Delete this article in its entirety and substitute the following revised article:

"GC.16 FORCE MAJEURE. The term force majeure, as used in these contract documents shall mean any cause beyond the control of the Contractor, and which the Contractor could not foresee and/or reasonably provide against and which prevents the Contractor from wholly or partly performing any duties under the contract.

Force majeure shall include, but is not limited to, any of the following:

a. War, revolution, insurrection or hostilities (whether declared or not)

b. Riot, civil commotion or civil uprising (other than among the Contractor's employees)

c. Earthquake, flood, tempest, hurricane, lightning or other natural disaster

d. Any fire of major proportions, or explosion

e. Epidemic

f. Strike, lockout or other industrial disturbance

If there occurs an event constituting force majeure, the Contractor shall give written notice of the occurrence to the Owner within 15 days of the occurrence or as soon thereafter as is practicable, including a statement describing the effect of such occurrence upon the performance of this agreement.

In the event of a force majeure, the Contractor unless otherwise directed by the Owner in writing shall continue to undertake and perform the duties included in this Contract as far as is reasonably practicable. If prevented from so performing by such cause, the performance may be suspended during the continuance of such inability but for no longer period and such inability shall be removed if practicable with all reasonable dispatch.

In the event of a force majeure resulting in a suspension of work this Contract shall be extended by a period equal to that for which the Contractor was prevented from performing.

If such event lasts for more than 45 days after notice has been given to the Owner in writing, either party to this Contract may terminate this Contract and the Contractor shall thereupon be entitled to any sums which would be payable pursuant to the termination provision of this Contract."

26. Page GC-8, Article GC.17. In the sixth line of this article, delete phrase "interest on investment".

27. Page GC-9, Article GC.19.1. In the third line of the second paragraph, delete the word "either".

In the fourth line of the second paragraph, delete the words "an action in court".

In the second and third paragraphs, wherever the phrase "Owner or Engineer" appears, change the phrase to "Owner and Engineer". (5 places)

28. Page GC-12, Article GC.23. Delete the last sentence of the first paragraph.

29. Page GC-13, Article GC.25. Add the following sentence to the first paragraph:

> "Labor costs involved in carrying out such work shall be borne by the Contractor."

30. Page GC-22, Article GC.32.3. In the first paragraph, delete the phrase "except as provided for under the AID Capital Projects Guidelines M.O. 1442.2 and M.O. 1442.3".

Delete the third paragraph in this article.

31. Page GC-24, Article GC.33. Revise the first sentence in this article to read:

> "Unless otherwise specified the Contractor shall begin the work under this Contract within 10 days after receipt of a notice to proceed from the Owner to be followed by the establishment of an irrevocable Letter of Credit in a mutually acceptable USA bank for the USA Dollar value of this Contract."

32. Page GC-30, Article GC.44. In the next to last paragraph on this page, insert the words "Contractor and the" between the words "The expatriate" in the first line.

In the ninth line of the next to last paragraph on this page, insert the words "Contractor and its" between the words "The expatriate".

33. Page GC-31, Article GC.49.1. Revise "South Yemen" to read "Yemen (Adan)".

34. Page 1A-3, Article 1A.6. Change the second line of the first paragraph to read:

"of the equipment and materials to assure delivery at the end of ships tackle at the Port of Semarang,"

35. Page 1B-5, Article 1B.15. Revise the last line of this article to read as follows:

"paragraphs and at a range of ambient temperatures up to 50 C."

36. Page 1B-8, Article 1B.25. Delete the second paragraph on this page and insert the following revised paragraph:

"Unless otherwise specified, all pressure and temperature instruments shall have metric scales. Scales shall be in kilograms per square centimeter for pressure instruments and in degrees centigrade for temperature instruments."

37. Page 1D1-3, Article 1D1.5.8. Change the last sentence to read:

"The ground lug size shall be in accordance with the following tabulation:

Full Load Motor Amperes	Minimum Ground Lug Range - AWG
0 thru 21	12 thru 10
22 thru 40	10 thru 8
41 thru 65	8 thru 6
66 thru 156	6 thru 4
157 thru 240	4 thru 2
241 thru 400	2 thru 1/0 "

38. Page 2A-10. Under DESIGN REQUIREMENTS, change the tube side design pressure from "1800" psi to read "2400" psi and change the tube side test pressure from "2700" psi to read "3600" psi.

39. Page 2A-11. Under DESIGN REQUIREMENTS, change the tube side design pressure from "1800" psi to read "2400" psi and change the tube side test pressure from "2700" psi to read "3600" psi.

40. Page 2D-4, Article 2D.8.1. After the second item in the design pressure listing, add the following:

"Brine heater shell side 135 psi"

41. Page 2D-5, Article 2D.8.2. Change the second item from the top of the page to read:

"Deaerator

If tray type	Type 304 stainless steel
If packed type	Polypropylene or acceptable equal"

42. Page 2D-6, Article 2D.9. Change the last line of the last paragraph to read:

"evaporator shell, but will be required for all tube bundles."

43. Page 2D-6, Article 2D.12. In the last line of the second paragraph, change the word "alloy" to read "material".

44. Page 2D-7, Article 2D.13.2. In the last line of this article, change the word "butt" to read "socket".

45. Page 2D-8, Article 2D.14. Change the first sentence of the first paragraph to read:

"All interior carbon steel surfaces, including baffles and supports shall be blast cleaned using steel grit."

46. Page 2E1-2, Article 2E1.2. Delete the first indented item at the top of the page which reads "Inlet feedwater.....".

Change the second line of the first paragraph after the listing to read "Subsection 2E4" instead of "Subsection 2G4".

In the second line of the next to the last paragraph, change the words "battery and 240 volt" to read "battery or 240 volt".

47. Pages 2E2-3 and 2E2-4, Article 2E2.8. Delete both paragraphs under this article and substitute the following:

"All interior carbon steel surfaces, including the baffles and supports shall be blast cleaned using steel grit. The blast cleaning shall be done prior to any interior drilling or fabrication. The protective coating shall be continually touched up during fabrication to provide the required protection. The protective coating shall be a water soluble rust preventive material that is acceptable to the Engineer.

After fabrication is completed and before shipment, the interior shall be cleaned and thoroughly dried, after which all connections and openings shall be adequately covered and sealed to prevent the entrance of dirt or moisture during ocean shipment and prior to erection."

BLACK & VEATCH INTERNATIONAL
Consulting Engineers

* * * * * * * * * * * * * *

ACKNOWLEDGMENT

The undersigned bidder hereby certifies that the revisions set forth in this addendum have been incorporated in his bid and are a part of the specifications and documents.

Signed _____

_____

Date DEC 11, 1973

(PLN - 6104)
(HEAT EXCHANGERS - M-12B)
(ADDENDUM 1)
111473

PROPOSAL

To: Ir. Bagoes Moedijantoro, Director of Construction
PERUSAHAAN UMUM LISTRIK NEGARA
Jalan Sunan Ngampel 1
Kebajoran Baru, Jakarta, Indonesia

PROPOSAL FOR HEAT EXCHANGERS

Gentlemen:

The undersigned bidder having read and examined the specifications and associated contract documents for the above designated equipment which will be incorporated in the new Semarang Steam Power Plant does hereby propose to furnish the equipment and provide the services set forth in this Proposal.

All prices stated herein are firm and shall not be subject to escalation provided this Proposal is accepted within 100 days after the date of opening of the proposals.

The prices stated in USA Dollars include all USA taxes which might lawfully be assessed against the undersigned. All Indonesian taxes which might lawfully be assessed against the undersigned shall be for the account of the Owner in accordance with the provisions of Article GC.22.2 of the GENERAL CONDITIONS.

LUMP SUM PRICES

The undersigned bidder hereby proposes to furnish the feedwater heaters, deaerating heaters, and auxiliary cooling water heaters; and/or the flash evaporator, desalination plant, and package steam generator in accordance with the specifications and associated contract documents as defined in Article GC.1 of the GENERAL CONDITIONS for the following firm lump sum prices.

C.1 EQUIPMENT AND MATERIALS

Item 1. Lump sum price for furnishing eight feedwater heaters, two deaerating heaters, and four auxiliary cooling water heat exchangers fas USA port of shipment complete as specified:

Not included in our proposal

_____ Dollars ($ USA)
(Price in Words)

Item 2. Lump sum price for furnishing one flash evaporator, one desalination plant, and one package steam generator fas USA port of shipment complete as specified:

Two hundred eighty five thousand, two hundred

_____ Dollars ($285,200 USA)
(Price in Words)

C.2 FREIGHT

Item 1. Estimated lump sum price of ocean freight including port charges for handling, loading, and unloading onto barge; insurance; and port surcharge for shipping all equipment and materials furnished under C.1, Item 1 above from USA port to Port of Semarang, Indonesia:

Not supplied

_____ Dollars ($ USA)
(Price in Words)

Item 2. Estimated lump sum price of ocean freight including port charges for handling, loading, and unloading onto barge; insurance; and port surcharge for shipping all equipment and materials furnished under C.1, Item 2, above from USA port to Port of Semarang, Indonesia:

Forty thousand

_____ Dollars ($ 40,000 USA)
(Price in Words)

C.3 MANUFACTURER'S FIELD SERVICES

If required by the Owner, manufacturer's technical field services specified in Section 1A will be furnished at the following rates.

C.3.1 Representative's Daily Service Rate

Service rate for each technical field representative exclusive of living costs, expenses and transportation, and on the basis of six 8-hour days per week on the site:

One thousand, three hundred and twenty dollars/week

_____ Dollars ($1,320/week USA)
(Price in Words)

C.3.2 Overtime Rate

Service representative's time in excess of 48 hours per week will be provided at the following hourly rate:

Thirty-five dollars/hour

_____ Dollars ($35.00/hr.USA)
(Price in Words)

C.3.3 Expenses

Living costs and other expenses incurred in Indonesia will be invoiced at cost but will not exceed the following per diem:

Thirty-one thousand, one hundred and twenty-five

_____ Rupiahs (Rp 31,125 IND)
(Price in Words)

C.3.4 Transportation

Estimated cost per round trip from the bidder's office to Semarang, Central Java, Indonesia and return, including living costs and other expenses incidental to travel, but excluding per diem salary cost:

One thousand, seven hundred

_____ Dollars ($1,700 USA)
(Price in Words)

and

Sixty-two thousand, two hundred and fifty

_____ Rupiahs (Rp62,250 IND)
(Price in Words)

The rupiahs to dollar conversion rate is 415 Rupiahs per USA Dollar.

The undersigned hereby declares that only the persons or firms interested in the Proposal as principal or principals are named herein, and that no other persons or firms than herein mentioned have any interest in this Proposal or in the contract to be entered into; that this Proposal is made without connection with any other person, company, or partics likewise submitting a proposal; and that it is in all respects for and in good faith, without collusion or fraud.

Section 2D - FLASH EVAPORATOR

RILEY BEAIRD INC
(Bidder's Name)

Manufacturer and model number	MAXIM MODEL 1-TCPE-36	
	Brine Heater	Vapor Condenser
Effective tube surface, sq ft	[illegible]	[illegible] *
Ineffective tube surface, sq ft	[illegible]	[illegible] *
Total tube surface, sq ft	573.5	480
Tubes		
Material	A-249 TP-304 SS	B-111
Gage	3/4" OD x 18 BWG	5/8" OD x 20 BWG
Active length, ft	7.56	7.5
Number of tube passes	TWO	TWO
Number of tubes	97 [illegible]	98 [illegible] *
Design heat transfer coefficient Btu/hr/sq ft/F	560	400
Shell		
Material, ASTM number	A-242 CORTEN	
Thickness, in.	0.50 INCHES	
Degasifier material	N/A	
Mist eliminator material, ASTM number	316 S/S	
Brine pump requirements (pump furnished under separate specifications)		
Flow, gpm	30 GPM	
TDH, excluding friction in Owner's brine piping, ft		
Available NPSH above Owner's supporting steel, ft	2 FT	

(Trim Line)

(PLN - 6104)
(HEAT EXCHANGERS - M-12B)
(ADDENDUM 1)
111473

RILEY BEAIRD INC
(Bidder's Name)

	Brine Heater Tubes	Vapor Condenser Tubes	Brine Heater Shell
Model number	291	291	191

Field assembly

Describe the amount of field assembly welding, bolting, accessory installation, piping, wiring and other field work to be done

WELDING - NONE

BOLTING - SKID & TERMINAL PTS.

WIRING - LAMPS FOR SIGHT GLASS WINDOW

(Trim Line)

(PLN - 6104)
(HEAT EXCHANGERS - M-12B)
(ADDENDUM 1)
111473

PERUSAHAAN UMUM LISTRIK NEGARA

SEMARANG STEAM POWER PLANT

SPECIFICATIONS AND DOCUMENTS
FOR
HEAT EXCHANGERS

SPECIFICATION 6104 - M-12B

ADDENDUM 2
November 20, 1973

Each bidder shall note these revisions to the specifications and documents and incorporate these revisions in his proposal. Each bidder shall attach a signed acknowledged copy of this entire addendum in the front of the specifications and documents submitted with his proposal.

This addendum consists of two pages.

1. Page 2A-1, Article 2A.3. Delete the second paragraph in its entirety.

2. Drawing M6104-072773-1. Delete Drawing M6104-072773-1 which appears at the end of Section 2A.

3. Page 2C-4, Article 2C.7. Delete the following at the top of the page:

"Piping connection:

Shell	Carbon Steel, ASME SA-515 or ASME SA-285 Gr C
Channel	Cast iron"

4. Page 2C-4, Article 2C.8.3. In the first line of the second paragraph change the word "zinc" to read "carbon steel".

(PLN - 6104)
(HEAT EXCHANGERS - M-12B)
(ADDENDUM 2)
112073

5. Page 2E2-2, Article 2E2.3. Change the last line on this page to read:

"required for the evaporator shell, but will be required for all tube bundles."

BLACK & VEATCH INTERNATIONAL
Consulting Engineers

* * * * * * * * * * * * *

ACKNOWLEDGMENT

The undersigned bidder hereby certifies that the revisions set forth in this addendum have been incorporated in his bid and are a part of the specifications and documents.

Signed _____

Date DEC 11, 1973

(PLN - 6104)
(HEAT EXCHANGERS - M-12B)
(ADDENDUM 2)
112073

PERUSAHAAN UMUM LISTRIK NEGARA

SEMARANG STEAM POWER PLANT

SPECIFICATIONS AND DOCUMENTS
FOR
HEAT EXCHANGERS

SPECIFICATION M-12B

ADDENDUM 3
December 18, 1973

Each bidder shall note these revisions to the contract documents and incorporate these revisions in his proposal. Each bidder shall attach a signed acknowledged copy of this entire addendum in the front of the specifications submitted with his proposal.

This addendum consists of this page.

1. Page A-1. Change the closing date for receipt of proposals indicated in the fifth and sixth lines of the first paragraph to "January 5, 1974".

BLACK & VEATCH INTERNATIONAL
Consulting Engineers

* * * * * * * * * * * * * * * *

ACKNOWLEDGMENT

The undersigned bidder hereby certifies that the revisions set forth in this addendum have been incorporated in his bid and are a part of the contract documents.

Signed _____

_____

Date 1-7-74

(PLN - 6104)
(HEAT EXCHANGERS - M-12B)
(ADDENDUM 3)
121873

CONTRACT NO. PJ. 100/PST/74

4970204 (16)
PD-AAD-777
A

PERUSAHAAN UMUM LISTRIK NEGARA
AGENCY OF MINISTRY OF PUBLIC WORKS AND POWER
GOVERNMENT OF REPUBLIC OF INDONESIA
SEMARANG STEAM POWER PLANT UNITS 1 AND 2

LISTRIK NEGARA

177 p.

AID LOAN 497-H-024

SPECIFICATIONS AND DOCUMENTS

AUXILIARY PUMPS
BOILER FEED PUMPS
SPECIFICATION 6104-M-26A

CONTRACT ISSUE

BINGHAM-WILLAMETTE CO.
2800 N.W. Front Ave.
Portland, Oregon 97210

BLACK & VEATCH INTERNATIONAL
consulting engineers
KANSAS CITY, MISSOURI, USA JAKARTA, INDONESIA

PERUSAHAAN UMUM LISTRIK NEGARA

SEMARANG STEAM POWER PLANT

SPECIFICATIONS AND DOCUMENTS
FOR
AUXILIARY PUMPS

Specification M-26A

TABLE OF CONTENTS

		Page	through Page
I.	BIDDING REQUIREMENTS		
	Invitation to Bidders	A-1	A-2
	Instructions to Bidders	B-1	B-8
	Proposal	C-1	C-4
	* Proposal Data	D-1	D-8
	Contractor's Proposal PE-9537 Proposal Information	13 pages	
	Contractor's Revised Proposal PE-9537A	1 page	
	Contractor's Letter Dated 5 June 1974	3 pages	
	** ~~Bid Bond~~	~~E-1~~	~~E-2~~
II.	CONTRACT FORMS		
	Contract Agreement	CA-1	CA-4
	Basis of Contract Award	BA-1	
	Performance Bond	PB-1	PB-2
III.	GENERAL CONDITIONS	GC-1	GC-32
IV.	SPECIFICATIONS		
	Part 1 - GENERAL REQUIREMENTS		
	Section		
	1A - General Description and Scope of the Work	1A-1	1A-5
	1B - General Equipment Specifications	1B-1	1B-17
	1C - Engineering Data	1C-1	1C-6
	1D - Electric Motors	1D-1	1D2-2
	Part 2 - TECHNICAL REQUIREMENTS		
	Section		
	2A - Boiler Feed Pumps	2A-1	2A-10

* Pages D-9 through D-39 Deleted for Contract
** Bid Bond deleted for Contract
(PLN - 6104)
(AUXILIARY PUMPS - M-26A)
102373

	Page	through Page
** 2B - Miscellaneous Water Pumps	2B-1	2B-23
2C - Oil Pumps	2C-1	2C-9

APPENDIX

Addendum 1 Dated 14 November 1973	21 pages
Addendum 2 Dated 18 December 1973	1 page
Addendum 3 Dated 31 December 1973	1 page

** Not Included in Contract

(PLN - 6104)
(AUXILIARY PUMPS - M-26A)
102373

INVITATION TO BIDDERS

AUXILIARY PUMPS
FOR
SEMARANG STEAM POWER PLANT
PERUSAHAAN UMUM LISTRIK NEGARA

Sealed proposals will be received by Perusahaan Umum Listrik Negara (an agency of the Ministry of Public Works and Power of the Government of the Republic of Indonesia), at the office of the Director of Construction, Perusahaan Umum Listrik Negara, Jalan Sunan Ngampel 1, Kebajoran Baru, Jakarta, Indonesia until 11:00 a.m. Western Indonesia Time on
* ~~December 20, 1973~~ and then publicly opened for furnishing:
** ~~January 8, 1974~~ < February 1, 1974

FOUR BOILER FEED PUMPS
*** ~~FOUR AUXILIARY COOLING WATER PUMPS~~
~~ONE FIRE PUMP~~
~~THREE SCREEN WASH PUMPS~~
~~FOUR AIR PREHEAT COIL PUMPS~~
~~TWO MAKEUP WATER FILL PUMPS~~
~~TWO SERVICE WATER PUMPS~~
~~TWO CITY WATER BOOSTER PUMPS~~
~~ONE EVAPORATOR BRINE PUMP~~
~~TWO SEA WATER SUPPLY PUMPS~~
~~TWO LUBE OIL TRANSFER PUMPS~~
~~TWO LIGHT OIL SUPPLY PUMPS~~
~~TWO FUEL SUPPLY BOOSTER PUMPS~~

to be incorporated in the new 100 MW (2-50 MW units) Semarang Steam Power Plant, located in the port area of the City of Semarang, Java, Indonesia.

United States funds for the project will be furnished under United States Agency for International Development (AID) Loan 497-H-024.

It will be a condition of the proposal that all proposed equipment and materials shall have their source and origin in countries designated as eligible in United States AID Geographic Code 941.

Proposals will be considered only from qualified manufacturers, or authorized representatives of qualified manufacturers, who regularly manufacture equipment and materials of the type specified and who have built three or more units with similar design requirements, each with not less than three years of successful operating experience.

*Revised in accordance with Addendum 2, Item 1
**Revised in accordance with Addendum 3, Item 1
***Not in Contract

(PLN - 6104)
(AUXILIARY PUMPS - M-26A)
102373

Bidders must submit data with their proposals to establish their qualifications for performing the work. Proposals not accompanied by this data
* may be classified as nonresponsive and subject to ~~disqualification~~ rejection.

** Prospective bidders may examine and obtain copies of the specifications and documents at the following offices:

1. Black & Veatch International
   Jalan Sunan Ngampel 1
   Kebajoran Baru
   Jakarta, Indonesia

2. Black & Veatch International
   1500 Meadow Lake Parkway
   Kansas City, Missouri 64114 USA

Copies of the specifications and documents obtained in the United States require a deposit of $5.00; those obtained in Indonesia require a deposit of Rp 2,000. Deposits will not be refunded.

*** ~~Deposits for the specifications will not be refunded.~~

**** All proposals must be made on the printed forms included in the specification and documents.

Seven duplicate copies of each proposal will be required, each copy being bound with a copy of the specifications and documents.

Each bidder will be required to furnish a bid bond in the amount of not less than 10 per cent of the total value of the bid. The bid bond shall be as
***** stipulated in the Instructions to Bidders included with the specifications and documents.

All proposals shall be firm and cannot be altered, withdrawn, or resubmitted
****** within 100 days after the date set for opening of bids. All proposals shall be on a lump sum basis. Proposals may be submitted on the basis of furnishing all pumps specified, the boiler feed pumps only, or the remainder of the pumps only. Proposals will not be considered for individual pumps other than the boiler feed pumps.

~~****** The Perusahaan Umum Listrik Negara reserves the right to accept the proposal which, in its judgment is the lowest responsive proposal by a qualified bidder, to reject any and all proposals, and to waive irregularities in any proposal that is submitted.~~ Any award, waiver of irregularities, or rejection of proposals shall be subject to AID approval. Proposals received after the specified time of closing will be returned unopened.

The Perusahaan Umum Listrik Negara reserves the right to accept the proposal which, in its judgment, is the lowest responsive proposal submitted by a qualified bidder.

MINISTRY OF PUBLIC WORKS AND POWER
represented by
PERUSAHAAN UMUM LISTRIK NEGARA
Ir. Bagoes Moedijantoro,
Director of Construction

*Revised in accordance with Addendum 1, Item 1
**Revised in accordance with Addendum 1, Item 2
***Revised in accordance with Addendum 1, Item 3
****Revised in accordance with Addendum 1, Item 4
*****Revised in accordance with Addendum 1, Item 5
******Revised in accordance with Addendum 1, Item 6

(PLN - 6104)
(AUXILIARY PUMPS - M-26A)
102373

INSTRUCTIONS TO BIDDERS

B.1 GENERAL. Proposals are requested by the Perusahaan Umum Listrik Negara, an agency of the Ministry of Public Works and Power of the Government of the Republic of Indonesia, hereinafter referred to as the "Owner" for equipment, materials, and related work set forth in the attached specifications. All proposals shall be prepared and submitted in accordance with these instructions.

B.2 GENERAL PROJECT DESCRIPTION. The specified equipment and materials will be incorporated in the Owner's new Semarang Steam Power Plant. The plant will be located in the port area of the city of Semarang, Central Java, Indonesia. Initial plant construction will consist of two 50 MW oil fired steam electric generating units.

The dollar portion of the project will be financed by the United States Agency for International Development (AID) under Loan 497-H-024. The rupiah portion of the project will be financed by the Government of Indonesia.

B.3 BIDDER QUALIFICATIONS. In order for his proposal to be considered, the bidder must submit written evidence, satisfactory to the Owner, of his qualifications to satisfactorily perform the specified work. Qualification data shall be submitted with the proposal in a separate envelope clearly marked as follows:

QUALIFYING DATA

For _____
(Title of Work Proposed)

By _____
(Bidder's Name)

For

PERUSAHAAN UMUM LISTRIK NEGARA BID OPENING
FOR SEMARANG STEAM POWER PLANT

_____
(Date of Bid Opening)

The envelope of qualifying data shall be placed inside the envelope containing the proposal.

The bidder shall certify his qualifications by submitting evidence that he:

Is a qualified manufacturer, or authorized representative of a qualified manufacturer, who regularly manufactures equipment and materials of the type specified

does not anticipate change in ownership or major policy during the period of the proposed work. If such change is anticipated the scope and effect thereof shall be defined.

Has adequate plant and manufacturing capacity available to do the work properly and expeditiously within the time period specified

Has, or can arrange for, adequate field service organization to provide technical services in Indonesia such as erection advisors or servicemen if such services are required by the specifications and associated documents

Has adequate financial status to meet the financial obligations incident to the work

Has no claims pending against him regarding the quality of performance of his work

Is a well established manufacturer having adequate technical knowledge and practical experience

Has designed and manufactured three or more units having similar design requirements, each of which has been in successful commercial operation for a period of not less than three years. The evidence shall consist of a selected listing of the units, indicating for each unit the owner's name, location, date of initial operation, and rating. The listing shall be specially prepared for this particular bidding and shall list only those units falling under the above requirements.

Has designed and manufactured equipment of the type proposed during the preceding two years

The bidder is advised that the above stated requirements are a minimum and that the Owner reserves the right to request the submittal of additional information.

The Owner reserves the right to reject the proposal of any bidder if, in the opinion of the Owner, the qualification data is incomplete or the bidder is not qualified to satisfactorily perform the work.

B.4 PROPOSALS. Seven copies of each proposal shall be prepared and submitted, each copy containing a complete bound copy of these contract documents. Proposals which are not prepared and submitted in accordance with these instructions may be rejected.

B.4.1 Preparation. Each proposal shall be carefully prepared using the proposal and data forms bound herewith. Entries on the proposal and data forms shall be typed, using dark black ribbon, or legibly written in black ink. All prices shall be stated in words and figures except where the forms provide for figures only. All proposals shall be in English.

* The bidder shall not alter any part of these specifications and documents in any way.

The bidder shall staple or otherwise bind, with each bound copy of contract documents submitted, a signed copy of each addendum issued for these specifications during the bidding period. The bidder shall assemble all drawings, catalog data, and other supplementary information necessary to thoroughly describe materials and equipment covered by the proposal, and shall attach such supplemental information to the bound copy of these specifications submitted with the proposal. No such descriptive data will in any way be construed to be a part of or to modify in any way the bidder's proposal.

B.4.2 Signatures. Each bidder shall sign the proposal with his usual signature and shall give his full business address. The names of all persons signing should also be typed or printed below the signature.

Bids by partnerships shall be signed with the partnership name followed by the signature and designation of one of the partners or other authorized representative. A complete list of the partners shall be included with the proposal.

Bids by a corporation shall be signed in the official corporate name of the corporation, followed by the signature and designation of the president, secretary, or other person authorized to bind the corporation.

A bid by a person who affixes to his signature the word "president", "secretary", "agent", or other designation, without disclosing his principal, will be rejected. Satisfactory evidence of the authority of the officer signing in behalf of the corporation shall be furnished. Bidding corporations shall designate the state in which they are incorporated and the address of their principal office.

The bidder's name stated on the proposal shall be the exact legal name of the firm.

*Revised in accordance with Addendum 1, Item 7

3.4.3 Submittal. Proposals shall be submitted in sealed envelopes endorsed on the outside with the bidder's name and address and marked on the outside as follows:

PROPOSAL FOR _____ (Name of equipment)
SEMARANG STEAM POWER PLANT
TO BE OPENED 11:00 A.M. WESTERN INDONESIA
TIME IN JAKARTA, INDONESIA on
_____, 197_.
(Date of Opening)

The proposal along with supplementary information and qualification data shall be transmitted to the following:

The original and four copies to:

Perusahaan Umum Listrik Negara
Jalan Suman Ngampel 1
Kebajoran Baru
Jakarta, Indonesia

* Attention: Ir. ~~Bagoes Moedijantoro~~ Bagoes Moedijantoro
Director of Construction

Two copies to:

Black & Veatch International
1500 Meadow Lake Parkway
Kansas City, Missouri USA 64114

Attention: Mr. L. J. Svoboda

Proposals may be submitted either by authorized local representatives or directly by qualified manufacturers. A single proprietary interest shall not submit multiple proposals for the same work even though the individual proposals are submitted under different names. The Owner reserves the right to reject proposals so submitted.

Proposals will be received up to the date and time specified in the INVITATION TO BIDDERS. Proposals received after that time will be returned to the sender unopened. It is the responsibility of the bidder to assure that his proposal is received by Perusahaan Umum Listrik Negara at their office prior to the time set for opening. Bidders shall send a cablegram to the Owner at the time their proposal is dispatched indicating that the proposal has been dispatched. The cablegram should be addressed to Ir. Bagoes Moedijantoro, Director of Construction, PLNPST, Jakarta, Indonesia.

*Revised in accordance with Addendum 1, Item 8

B.4.4 Firm and Complete Proposals. All prices stated in the Proposal of the successful bidder shall be firm throughout the duration of the contract without escalation.

*~~Proposals shall be for the complete scope of the work specified in these contract documents. Proposals for individual components of the work will not be considered.~~

See Page B-5A

B.4.5 Withdrawal. Proposals may be withdrawn, altered, and resubmitted at any time before the time set for opening the bids. Proposals may not be **withdrawn, altered, or resubmitted ~~within 150 days~~ for a period of 100 days thereafter.

B.5 INFORMATION TO BE SUBMITTED WITH PROPOSAL. Each bidder shall submit with his proposal the name of manufacturer and the type or model of each principal item of equipment or material he proposes to furnish. He shall also submit drawings and descriptive matter indicating general dimensions, principle of operation, and the materials from which the parts are made. Any bid not having sufficient descriptive matter to describe accurately the equipment or materials bid upon may be rejected as irregular. The drawings and descriptive matter submitted by the successful bidder will be retained by the Owner. Any material departure from these drawings and descriptive matter as submitted will not be permitted without written permission from the Owner.

Verbal statements made by the bidder at any time regarding quality, quantity or arrangement of equipment will not be considered.

If alternate equipment or materials are indicated in these specifications, the Bidder shall have the option of selecting any one of the alternates so indicated.

B.6 PROPOSAL GUARANTEE. Each proposal shall be accompanied by a proposal guarantee in an amount not less than 10 per cent of the total bid.

The proposal guarantee shall be made payable without condition, in USA Dollars to Perusahaan Umum Listrik Negara, and the amount thereof may be retained by said Perusahaan Umum Listrik Negara as liquidated damages if the bidder's proposal is accepted and the bidder fails to enter into contract in the form prescribed, with legally responsible surety, within 45 calendar days after the date he is awarded the contract.

The proposal guarantee of each unsuccessful bidder will be returned after award of contract or when his proposal is rejected. The proposal guarantee of the bidder to whom the contract is awarded will be returned when said bidder executes the contract and files a satisfactory Performance Bond. The proposal guarantee of the second lowest responsive bidder may be ***retained for a period not to exceed ~~150~~ 100 days pending the execution of the contract and Performance Bond by the successful bidder.

*Revised in accordance with Addendum 1, Item 9
**Revised in accordance with Addendum 1, Item 10
***Revised in accordance with Addendum 1, Item 11

The proposal guarantee shall be in the form of a bank draft, an irrevocable bank guarantee or an acceptable bidder's bond in the form included herein. The surety must be approved by the Owner and AID. Bank drafts or guarantees must be issued by a solvent USA bank meeting the criteria established by the USA Controller of Currency for guarantees issued by USA national banks. Bidder's bonds must be issued by companies authorized to do business in the bidder's state of incorporation and must meet the criteria established by the USA Treasury Department for acceptable sureties on U.S. Government bonds.

B.7 TAXES, PERMITS, AND LICENSES. The bidder's attention is directed to the provisions set forth in the GENERAL CONDITIONS under the article TAXES, PERMITS, AND LICENSES. Each bidder shall be responsible for determining the applicable taxes, permits, and licenses.

B.8 TIME SCHEDULE. The time schedule for performing the specified work will be a basic consideration of the Contract. The proposal shall be based upon submittal of drawings and engineering data in accordance with the requirements of Section 1C and performance of the work in accordance with the schedule specified in Section 1A. It will be necessary that the bidder satisfy the Owner of his ability to complete the work within the stipulated time. In this connection, attention is called to the provisions of the attached GENERAL CONDITIONS relative to delays and extensions of time.

B.9 LOCAL CONDITIONS. Each bidder is urged to thoroughly inform himself of all conditions and factors which would affect the prosecution and completion of the work.

It must be understood and agreed that such factors have been properly investigated and considered in the preparation of the proposal submitted. No claims for financial adjustment to any contract awarded for the work under these specifications and documents will be permitted by the Owner which are based on the lack of such prior information or its effect on the cost of the work.

B.10 INTERPRETATION OF SPECIFICATIONS. If any prospective bidder is in doubt as to the true meaning of any part of the proposed contract documents, he may submit to the Engineer a written request for an interpretation. The person submitting the request will be responsible for its prompt delivery. Any interpretation of the proposed documents will be made only by addendum mailed or delivered to each person receiving a set of such documents. The Owner will not be responsible for any other explanations or interpretations of the proposed documents.

B.4.4 Firm and Complete Proposals

* Unless otherwise specified, proposals shall be for the complete scope of the work specified in these specifications and documents. Proposals for individual components of the work will be considered only to the extent such partial scope of supply is specificlaly stipulated in the INVITATION TO BIDDERS and the PROPOSAL sections included as a part of these specifications and documents.

*Revised in accordance with Addendum 1, Item 9

(PLN - 6104)
(EQUIPMENT & MATERIALS)
101573

B.11 BOND. The Contractor to whom the work is awarded will be required to furnish a performance bond to the Owner prior to signing of the contract. ** The bond shall be equal to 80 per cent of the dollar value of the contract and shall be payable in USA Dollars.

The bond shall cover the performance of the work included in these specifications. The bond shall be executed on the form provided a copy of which is attached hereto. The bond shall be signed by a surety authorized to do business in the state in which the Contractor is incorporated or has his principal office; acceptable as surety to the Owner and AID; and acceptable as surety under the criteria established by the USA Treasury Department for acceptable sureties on U.S. Government bonds.

B.12 INELIGIBILITY. No firm included by AID on its list of suspended, debarred, or ineligible bidders will be permitted to bid either individually or in a joint venture, nor shall any firm so listed qualify for performing the work as a subcontractor or otherwise.

No USA firm, or any firm owned more than 50 per cent by a USA firm shall be eligible for bidding or financing if the USA firm is not in compliance with Executive Order 11246, as amended, and regulations and orders issued thereunder.

* B.13 ACCEPTANCE AND REJECTION OF PROPOSALS. ~~The Owner reserves the right to accept the proposal which, in its judgment, is the lowest responsive proposal by a qualified bidder and to reject any and all proposals and to waive minor irregularities in any proposal that is submitted.~~ Any award, waiver of irregularities, or rejection of proposals shall be subject to AID approval.

A responsive proposal is one which accepts all of the terms and conditions of these specifications and documents without material modification. A material modification is one which affects in any way the price, quantity, quality, or delivery or installation date of equipment or materials; or the price, quality, scope, delivery date, or completion date of equipment and materials, or other services to be supplied or performed; or, which limits in any way any responsibilities, duties, or liabilities of the bidder or any rights of the Owner or of AID, as any of the foregoing have been specified or defined in these specifications and documents.

B.14 CURRENCIES. Proposal pricing shall be stated in USA Dollars and Indonesian Rupiahs as shown in the Proposal. It is intended that the Contractor be paid in the currencies expended by him. Costs incurred outside Indonesia shall be shown as USA Dollars. Pricing shall be in Indonesian Rupiahs for that portion of the work performed in Indonesia, except wage payment to expatriate employees and other allowable dollar costs.

The Owner reserves the right to accept the proposal which, in its judgment, is the lowest responsive proposal submitted by a qualified bidder.

*Revised in accordance with Addendum 1, Item 12
** Changed for Contract

~~* 11.1 EVALUATION Proposals will be evaluated on the basis of the fas price bid for each of the four categories of equipment and materials independently as specified. All other items such as service, ocean freight, and insurance will not be included in the economic evaluation.~~

~~For purposes of evaluation, the rupiah portion of proposal pricing will be converted to dollars at the rate of 415 Rupiahs per USA Dollar.~~

* B.15 EVALUATION. Proposals will be evaluated on the basis of the fas lump sum price bid for each of the four categories of equipment and materials independently as specified.

The delivery date stipulated in Article 1A.6 must be met by the successful bidder and must be acknowledged in the proposal submitted.

*Revised in accordance with Addendum 1, Item 13

PROPOSAL

To: Ir. Bagoes Moedijantoro, Director of Construction
PERUSAHAAN UMUM LISTRIK NEGARA
Jalan Sunan Ngampel 1
Kebajoran Baru, Jakarta, Indonesia

PROPOSAL FOR AUXILIARY PUMPS

Gentlemen:

The undersigned bidder having read and examined the specifications and associated contract documents for the above designated equipment and materials which will be incorporated in the new Semarang Steam Power Plant does hereby propose to furnish the equipment and materials and provide the services set forth in this Proposal.

All prices stated herein are firm and shall not be subject to escalation provided this Proposal is accepted within 100 days after the date of opening of the proposals.

The prices stated in USA Dollars include all USA taxes which might lawfully be assessed against the undersigned. All Indonesian taxes which might lawfully be assessed against the undersigned shall be for the account of the Owner in accordance with the provisions of Article GC.22.2 of the GENERAL CONDITIONS.

LUMP SUM PRICES

The undersigned bidder hereby proposes to furnish the boiler feed pumps; and/or the water pumps; and/or the oil pumps; and/or the fire pump in accordance with the specifications and associated contract documents as defined in Article GC.1 of the GENERAL CONDITIONS for the following firm lump sum prices.

C.1 BOILER FEED PUMPS

C.1.1 Equipment

Lump sum price for furnishing the boiler feed pumps
fas USA port of shipment complete as specified:

* FOUR HUNDRED FIFTY FIVE THOUSAND
FOUR HUNDRED SEVENTY FOUR Dollars ($455,474 USA)
(Price in Words)

*Superseded and revised by Dynmac Corporation letter dated 5 June 1974

(PLN - 6104)
(AUXILIARY PUMPS - M-26A)
(ADDENDUM 1)
111473

C.1.2 Freight

Estimated lump sum price of ocean freight including port charges for handling, loading, and unloading onto barge; insurance; and port surcharge for shipping the boiler feed pumps from USA port to Port of Semarang, Indonesia:

SIXTEEN THOUSAND

NINE HUNDRED FORTY FIVE Dollars($16,945 USA
(Price in Words)

C.1.3 Manufacturer's Field Services

If required by the Owner, manufacturer's technical field services for the boiler feed pumps specified in Section 1A will be furnished at the following rates.

C.1.3.1 Representative's Daily Service Rate

Service rate for each technical field representative exclusive of living costs, expenses and transportation, and on the basis of six 8-hour days per week on the site:

THREE HUNDRED TEN Dollars($ 310 USA /DAY
(Price in Words)

C.1.3.2 Overtime Rate

Service representative's time in excess of 48 hours per week will be provided at the following hourly rate:

SIXTY Dollars($ 60 USA /HOUR
(Price in Words)

C.1.3.3 Expenses

Living costs and other expenses incurred in Indonesia will be invoiced at cost but will not exceed the following per diem:

Rupiahs(Rp IND)
(Price in Words)

C.1.3.4 Transportation

Estimated cost per round trip from the bidder's office to Semarang, Central Java, Indonesia and return, including living costs and other expenses incidental to travel. ~~but excluding per diem salary none~~:

THREE THOUSAND

* TWO HUNDRED SEVENTY FOUR Dollars ($3,274 USA)
(Price in Words)

and

_____

_____ Rupiahs (Rp IND)
(Price in Words)

** C.2 WATER PUMPS

C.2.1 Equipment

Lump sum price for furnishing the water pumps fas USA port of shipment complete as specified:

ONE HUNDRED FIFTY FIVE THOUSAND

FOUR HUNDRED EIGHTY Dollars ($155,480 USA)
(Price in Words)

** C.2.2 Freight

Estimated lump sum price of ocean freight including port charges for handling, loading, and unloading onto barge; insurance; and port surcharge for shipping the water pumps from USA port to Port of Semarang, Indonesia:

SEVEN THOUSAND

EIGHTY SIX Dollars ($7,086 USA)
(Price in Words)

** C.2.3 Manufacturer's Field Services

If required by the Owner, manufacturer's technical field services for the water pumps specified in Section 1A will be furnished at the following rates.

* Superseded and revised by Dynmac Corporation letter dated 5 June 1974
** Not Included in Contract

The undersigned hereby declares that only persons or firms interested in the Proposal as principal or principals are named herein, and that no other persons or firms than herein mentioned have any interest in this Proposal or in the contract to be entered into; that this Proposal is made without connection with any other person, company, or parties likewise submitting a proposal; and that it is in all respects for and in good faith, without collusion or fraud.

If this Proposal is accepted, the undersigned bidder agrees to submit engineering data, provide services, and complete delivery of the equipment and materials in accordance with the schedules stipulated in the specifications. The undersigned fully understands that adherence to the schedules stipulated is of the essence of the contract.

If this Proposal is accepted, the undersigned hereby agrees to enter into a contract on the attached forms within 45 calendar days from the date of notice by the Owner of award of contract and to furnish a Performance Bond satisfactory to the Owner.

Dated at Portland, Oregon this 24th day of January, 1974.

Bidder BINGHAM-WILLAMETTE COMPANY
a Division of Guy F. Atkinson Company

By [signature]
Wm. E. Tharp

Title General Manager

Business Address of Bidder 2800 N. W. Front Ave.
Portland, Oregon 97210

State of Incorporation NEVADA

Address of Principal Office Ten West Orange Ave.
South San Francisco, CA.
94080

(PLN - 6104)
(AUXILIARY PUMPS - M-26A)
102373

PROPOSAL DATA

D.1 GENERAL. Each bidder shall submit complete and definitive information on his offering in sufficient detail to permit a complete analysis of the bid. The requirements stated in the INSTRUCTIONS TO BIDDERS relative to information submittal shall be followed.

The requirements for information contained in this section are basic requirements. Additional information shall be provided as requested by the Engineer.

D.2 PERFORMANCE CURVES. The following performance curves shall be furnished as specified in Part 2:

Pump characteristic curves

Pump speed-torque curves

Motor speed-torque-current curves

D.3 DRAWINGS. Drawings shall be submitted indicating the following information:

Major dimensions of each pump

Cross section assembly views of each pump

Details of bearing construction

Diagram of allowable forces and moments on piping connections

All drawings shall be in sufficient detail to permit preliminary plant arrangement studies to be made.

D.4 SUPPLEMENTARY INFORMATION. The following supplementary information shall be submitted:

Description of testing facilities available, and complete description of the extent of testing included in the price for shop testing

List of recommended spare parts, in addition to those parts furnished with the pumps, needed for a three year period of operation and estimated total FAS cost, plus estimated freight charges. The successful bidder only will be required to submit a complete listing with individual prices.

D.5 EQUIPMENT DATA. The information required on the following pages is to assist the Engineer in evaluating the Proposal and in making an accurate estimate of the work required to install and erect the equipment and materials.

The data listed herein is stated for definitive purposes and for the convenience of the Owner.

The data listed herein shall not relieve the Contractor of his responsibility for meeting the requirements of the detailed specifications.

Note: Write entries boldly with black ink or type entries using carbon black ribbon. Do not use ball point pens. The completed pages will be reproduced by blue line printing.

D.5.1 Boiler Feed Pumps

BINGHAM-WILLAMETTE CO
(Bidder's Name)

General Data

Manufacturer	BINGHAM-WILLAMETTE CO.
Model or type number	4x6x10½B MSD
Type (diffuser, volute, etc)	VOLUTE
Number of stages	7
Speed, rpm	4250
Minimum recommeded pump flow, lb/hr	170 GPM 8500 lb/hr
Connection sizes, in.	
Suction	6"
Discharge	4"
Inertia of pump rotating element, WK^2	16.0 lb FT^2
Static deflection of shaft, in.	0.004 IN
Maximum deflection of shaft, in.	0.0055 IN
Clearances at the following points, in new condition, in.	
Impellers and wearing rings	0.014/0.015
Balancing disc and sleeve	0.010/0.011
Shaft seals	NIL — Mech. Seal
Materials (by ASTM and AISI number)	
Casing	ASTM A296 CA6NM
Shaft	ASTM A276 410 HT
Impellers	ASTM A296 CA6NM
Wearing rings	ACI CA-15
Shaft sleeves	ASTM A276 440 HT
Recirculation orifice PLTS	ASTM A276 410

(PLN - 6104)
(AUXILIARY PUMPS - M-26A)
072773

	BINGHAM-WILLAMETTE CO. (Bidder's Name)
Type of bearings	SLEEVE RADIAL, PIVOT SHOE THRUST
Description of pump seals	JOHN CRANE MODEL 8B1-XPIDI WITH PUMPING RING, 1/2" BORG WAGNER COOLERS
Lubricating oil requirements	
Quantity, gpm, each pump	14 GPM
Supply temperature, F	140 °F
Return temperature, F	164 °F
Supply pressure, psi	10-12 PSI
Cooling water flow at 95 F, gpm	
Stuffing boxes	—
Oil cooler	20 GPM
Bearings	—
Other	SEAL 10 GPM
Pressure breakdown orifices	Recirculation / Warmup
Design flow, lb per hr	85000 / 5000
Connection size, in.	2" SCH 160 / 1" SCH 160
Manufacturer	BINGHAM / BINGHAM
Dimensions	12 3/4 LG. / 10 1/2 LG.
Coupling	
Manufacturer	KOPPERS
Model or type number	3 1/2 H
Rated horsepower and service factor	8712 HP / 5.8

(Trim Line)

(PLN - 6104)
(AUXILIARY PUMPS - M-26A)
072773

BINGHAM-WILLAMETTE CO.
(Bidder's Name)

Speed increaser	
Name of manufacturer	PHILADELPHIA GEAR
Model or type number	11 HSD
Service factor	1.92 BASED ON 1500 HP
Gear ratio	2.83:1
Maximum horsepower rating	2880 HP @ S.F. = 1.0
Shaft arrangement	PARALLEL HORIZ. OFFSET
Gears	
Material	4140 FORGED STEEL HEAT TREATED
Hardness	51 ROCKWELL C
Contact stress	110,300 PSI
Reliability factor	1
Load distribution factor	1.328
Life factor	1
Description of internal lubrication system	PRESSURE LUBE TO BEARINGS WITH SPRAY TO GEAR FACE.

(Trim Line)

(PLN - 6104)
(AUXILIARY PUMPS - M-26A)
(ADDENDUM 1)
111473

BINGHAM-WILLAMETTE CO.
(Bidder's Name)

Speed increaser	
Name of manufacturer	PHILADELPHIA GEAR
Model or type number	11 HSD
Service factor	1.92 BASED ON 1500 HP
Gear ratio	2.83:1
Maximum horsepower rating	2880 HP @ S.F. = 1.0
Shaft arrangement	PARALLEL HORIZ. OFFSET
Gears	
Material	4140 FORGED STEEL HEAT TREATED
Hardness	51 ROCKWELL C
Contact stress	110,300 PSI
Reliability factor	1
Load distribution factor	1.328
Life factor	1
Description of internal lubrication system	PRESSURE LUBE TO BEARINGS WITH SPRAY TO GEAR FACE.

(Trim Line)

(PLN - 6104)
(AUXILIARY PUMPS - M-26A)
(ADDENDUM 1)
111473

BINGHAM-WILLAMETTE CO.
(Bidder's Name)

Efficiency at rated conditions (cold water), per cent	78%
Power required at rated conditions, bhp	1447 HP
Maximum power required, bhp	1657 HP @ 325 °F
Motors	
Manufacturer	WESTINGHOUSE
Type	LIFE LINE D
Horsepower	1750
Current at rated voltage, amps	215 Full Load 1230 Locked
Stator winding connection	X Wye ____ Delta
Description of motor insulation	THERMALASTIC EPOXY
Full load speed, rpm	1484
Efficiency, per cent at load	95.4 Full 95.8 3/4 95.8 1/2
Power factor, per cent at load	92.2 Full 92.8 3/4 92.0 1/2
Full load torque at rated voltage, lb-ft	6190
Speed-torque-current curves of the motor at rated voltage, lb-ft/amp (or attached curve, No.____)	LATER ____/____ Max ____/____ at 80% Speed ____/____ at 60% Speed ____/____ Locked Rotor
Speed-torque-current curve of the motor at starting voltage, lb-ft/amp (or attached curve, No.____)	LATER ____/____ Max ____/____ at 80% Speed ____/____ at 60% Speed ____/____ Locked Rotor

(Trim Line)

(PLN - 6104)
(AUXILIARY PUMPS - M-26A)
072773

BINGHAM-WILLAMETTE CO.
(Bidder's Name)

Will complete test data and speed-torque-current curves be furnished	YES
Acceleration time for starting conditions specified, seconds (includes driven equipment)	LATER
Time-current curve during acceleration, Curve No. (attach curve)	Curve No. LATER
Number of successive starts	1 Hot 2 Cold
Cooling time before next start after running at rated full load, minutes	45 MIN.

	Full Voltage	Starting Voltage
Maximum allowable locked-rotor time with motor starting from ambient temperature, seconds	10 SEC	4000 V

Maximum allowable locked-rotor time with motor at rated temperature rise specified, seconds	LATER
Motor open circuit time constant (T°), seconds	LATER

Expected sound pressure level, at 5 feet

Center Frequency, Hz	dBC
125	78
250	84
500	84
1,000	80
2,000	84
4,000	78
8,000	79
Overall	88
Overall dBA	85

(Trim Line)

(PLN - 6104)
(AUXILIARY PUMPS - M-26A)
072773

BINGHAM-WILLAMETTE CO.
(Bidder's Name)

Space heater rating kW	0.200
Description of lubrication system	OIL LUBRICATED
Minimum pressure psi	—
Flow, gpm per bearing	—
Minimum clearance required to remove rotor, feet	DATA SHEET 3141 P. 63 ____ Height ____ Length ____ Width
Weight, pounds	4470 Stator 2300 Rotor 6770 Total
Overall dimensions, including shaft extensions, inches	DATA SHEET 3141 P. 63 ____ Dia ____ Length
Rotor inertia, lb-ft	LATER
Have complete tests been made previously on a duplicate motor	____ Yes X No

Expected pumping unit sound pressure level, dB flat response at distances specified in Section 2A

Center Frequency, Hz	dBC
125	LATER
250	
500	
1,000	
2,000	
4,000	
8,000	
Overall	
Overall, dBA	

(Trim Line)

(PLN - 6104)
(AUXILIARY PUMPS - M-26A)
072773

RESOLUTION OF AUTHORIZATION

Whereas, BINGHAM - WILLAMETTE COMPANY is a division of Guy F. Atkinson Company, a Nevada corporation, carrying on a general iron and steel fabrication and manufacturing business, including but not limited to machine and plate shop work, the manufacture of pumps, pressure vessels, gates and valves, and generally the design, manufacture and sale of other machinery equipment and devices which may be suitable for manufacture in its facilities:

Now, Therefore, be it

RESOLVED that each of the persons hereinafter named is hereby authorized on behalf of said corporation to do those things which are set forth following their name:

1. G. W. Wintz, Senior Vice President of Guy F. Atkinson Company and President of BINGHAM - WILLAMETTE COMPANY, is authorized to carry on all operations of said COMPANY, to represent it in all conferences, including any conferences with the United States or other governments or their agencies or representatives, to sign proposals, bids, contracts, purchase orders, change orders, bonds, applications for bonds, checks, progress estimates, government vouchers, affidavits, bills of sale, assignments, releases, warranties, letters, protests and appeals and, generally, to take any and all action necessary or convenient to the business of said COMPANY.

2. Wm. E. Tharp, General Manager of BINGHAM - WILLAMETTE COMPANY, is hereby authorized, in the absence of the said President, to carry on such business and execute such documents as the President could do if present, and the execution of any documents by the General Manager shall be conclusive evidence of the absence of the President.

3. A. R. Sadewic, Manager of Manufacturing of BINGHAM - WILLAMETTE COMPANY, is authorized to sign on behalf of said COMPANY, checks, progress estimates, government vouchers, affidavits, letters, bills of sale, assignments, protests, appeals and, in the absence of the President and General Manager, to sign all such proposals, bids, bonds, applications for bonds, contracts, purchase orders, change orders, releases, warranties or other documents and papers that could be signed by said President, and the execution of any documents by the Manager of Manufacturing shall be conclusive evidence of the absence of the President and General Manager.

4. W. L. Hallmark, Manager of Industrial Sales and Engineering of BINGHAM - WILLAMETTE COMPANY, is authorized to sign on behalf of said COMPANY, checks, progress estimates, government vouchers, affidavits, letters, bills of sale, assignments, protests, appeals and, in the absence of the President, and General Manager, to sign all such proposals, bids, bonds, applications for bonds, contracts, purchase orders, change orders, releases, warranties or other documents and papers that could be signed by said President, and the execution of any documents by the Manager of Industrial Sales and Engineering shall be conclusive evidence of the absence of the President and General Manager.

5. F. E. Westermann, Manager of the Valve Department of BINGHAM - WILLAMETTE COMPANY, is authorized to sign on behalf of said COMPANY, checks, progress estimates, government vouchers, affidavits, letters, bills of sale, assignments, protests, appeals and, in the absence of the President and General Manager, to sign all such proposals, bids, bonds, applications for bonds, contracts, purchase orders, change orders, releases, warranties or other documents and papers that could be signed by said President, and the execution of any documents by the Manager of the Valve Department shall be conclusive evidence of the absence of the President and General Manager.

RESOLVED FURTHER that all such actions heretofore taken in any of said capacities by any of the foregoing authorized representatives on behalf of this corporation are hereby ratified, confirmed and approved.

I, Betty A. Allen, Assistant Secretary of Guy F. Atkinson Company, the corporation above named, do hereby certify that pursuant to the By-Laws of said corporation granting to the Executive Committee of its Board of Directors full powers to so act upon all such matters when the Board of Directors is not in session, said Executive Committee unanimously adopted the foregoing resolutions by written consent January 6, 1971, and that said resolutions are in full force and effect.

In Witness Whereof, I have hereunto set my hand and affixed the seal of said corporation this 24th day of January, 1974.

Assistant Secretary

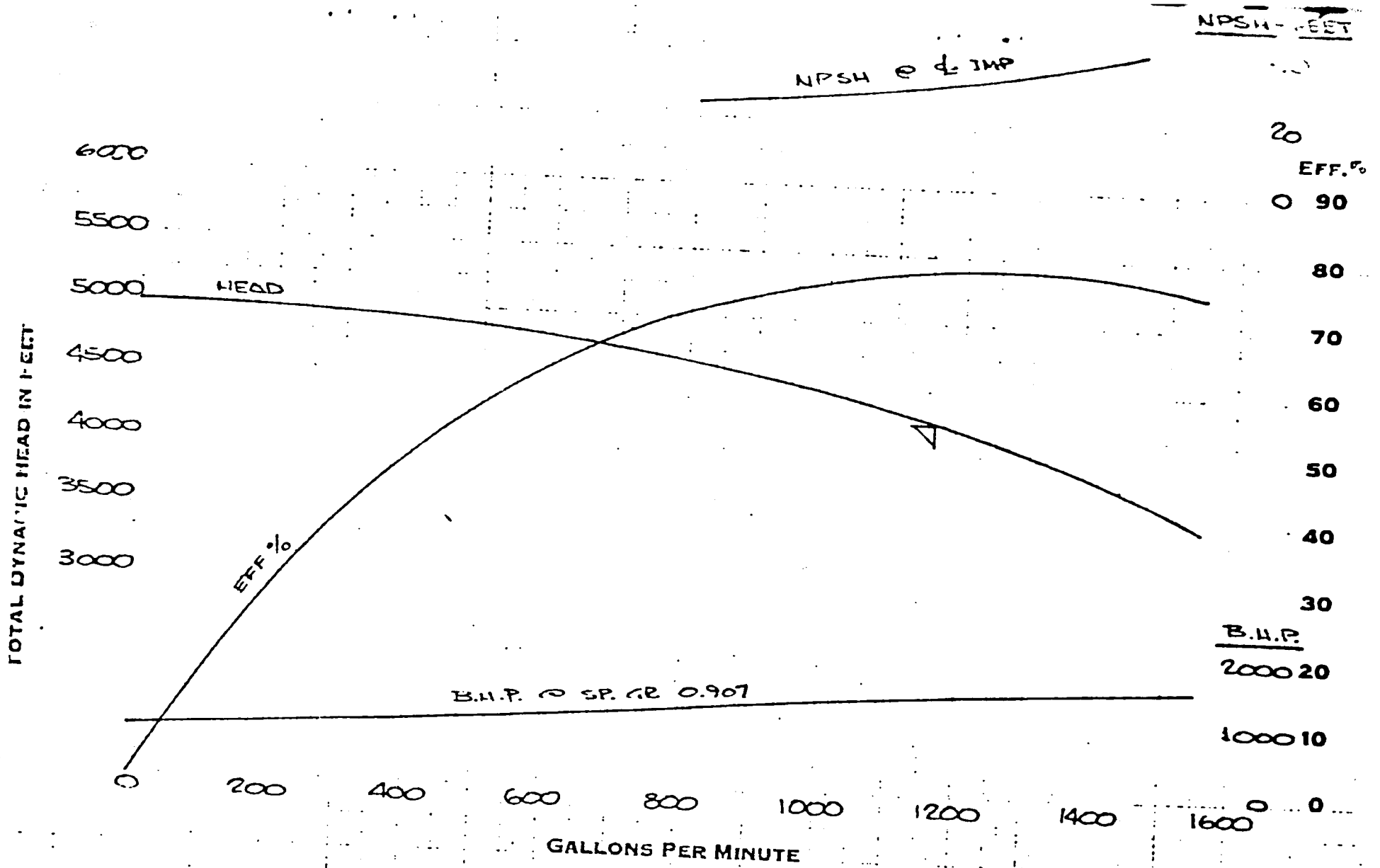

BLACK & VEATCH SEMARANG UNITS 1 & 2 BOILERFEED PUMPS	CHARACTERISTIC CURVE SHEET PUMP ENGINEERING DEPT WILLAMETTE	MAX 10 3/4 175	4 × 6 - 10½ B - MSD 7316 PUMP		
			10 3/4	413 MSD-11 413 MSD 2	1250 R.P.M.
					32605

BP 9537

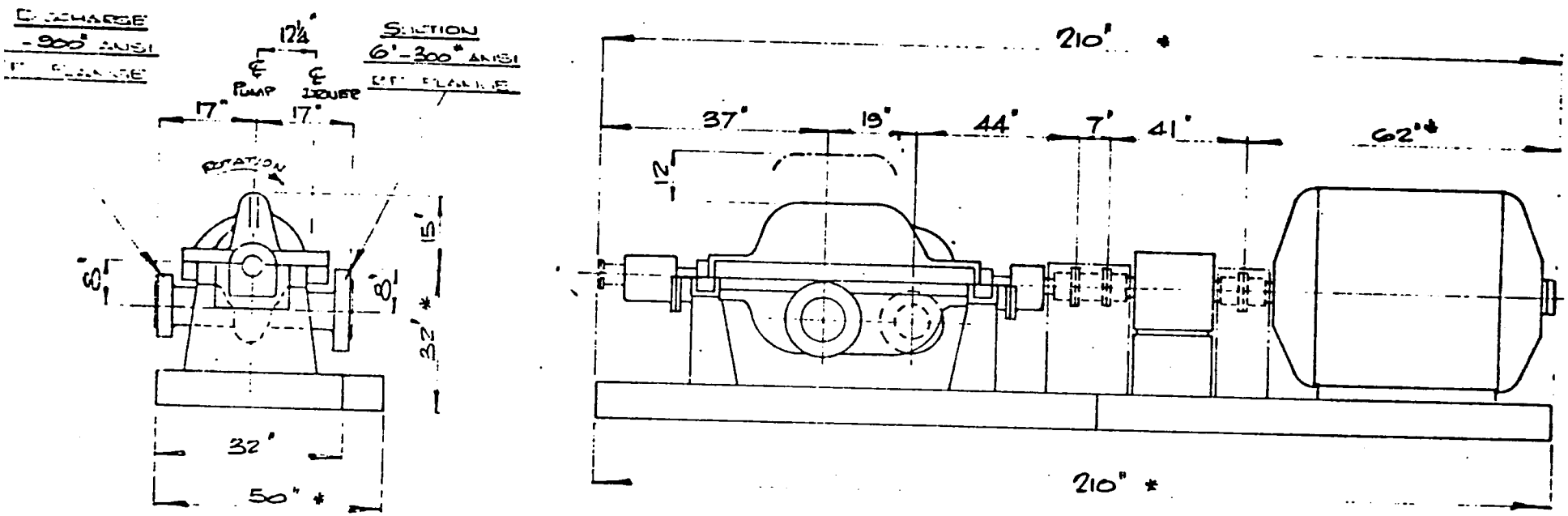

*. DEPENDENT ON DRIVER SELECTION

SLACK & VEATCH
SEMARANG 1 & 2

Boiler Feed Pump

Unless Noted Otherwise

Bingham-Willamette Co.

THE DESIGNS AND/OR INFORMATION SHOWN ON THIS DRAWING ARE PROPRIETARY, AND THE RECIPIENT AGREES NOT TO REPRODUCE OR COPY IT IN WHOLE OR IN PART, NOR TO REVEAL ITS CONTENT TO OTHERS NOR TO MAKE ANY USE OF IT THAT IS OR MAY BE INJURIOUS TO BINGHAM-WILLAMETTE CO

PRELIMINARY OUTLINE 4x6x10½ B-7ST. MSD PUMP

REF.	FIRST USED	DR.	CK	DATE 1/24/74	SCALE	BP 9537

REVISON DESCRIPTION	DATE	INIT	REV
			[A]

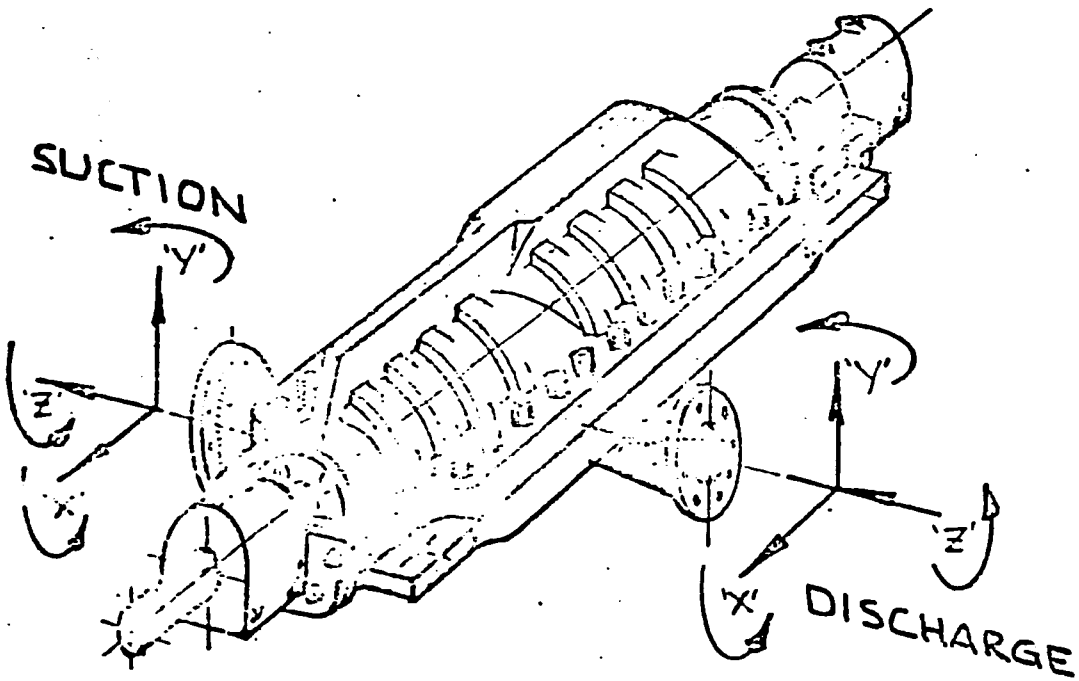

SUCTION

ITEM	FORCE	MOMENT
'X'	1500 lb	2900 lbft
'Y'	1700 lb	2550 lbft
'Z'	1500 lb	2550 lbft
'R'	1900 lb	3250 lbft

DISCHARGE

ITEM	FORCE	MOMENT
'X'	1050 lb	1450 lbft
'Y'	1175 lb	1250 lbft
'Z'	1050 lb	1250 lbft
'R'	1300 lb	1600 lbft

BLACK & VEATCH ENG^R.
SEMARANG 1 & 2.

MULTI-STAGE HORIZONTAL TYPE PUMP

4x6x10½ B - MSD 7STG.

Bingham PUMP DIVISION
BINGHAM-WILLAMETTE COMPANY
PORTLAND, ORE. - SHREVEPORT, LA.

REF.

FIRST USED

FORCE & MOMENT DIAGRAM.

DR. E. | CK. | DATE: 1/24/74 | SCALE: ~ .. 12 IN.

THE DESIGNS AND/OR INFORMATION ON THIS DRAWING ARE PROPRIETARY AND THE RECIPIENT AGREES NOT TO REPRODUCE OR COPY IT IN WHOLE OR IN PART, NOR TO REVEAL ITS CONTENTS TO OTHERS, NOR TO MAKE ANY USE OF IT THAT IS OR MAY BE INJURIOUS TO BINGHAM-WILLAMETTE COMPANY.

AP 9537

BEARING ASSEMBLY

BFW Pump

SLEEVE JOURNAL AND KINGSBURY THRUST - JHJ-5 & LARGER.

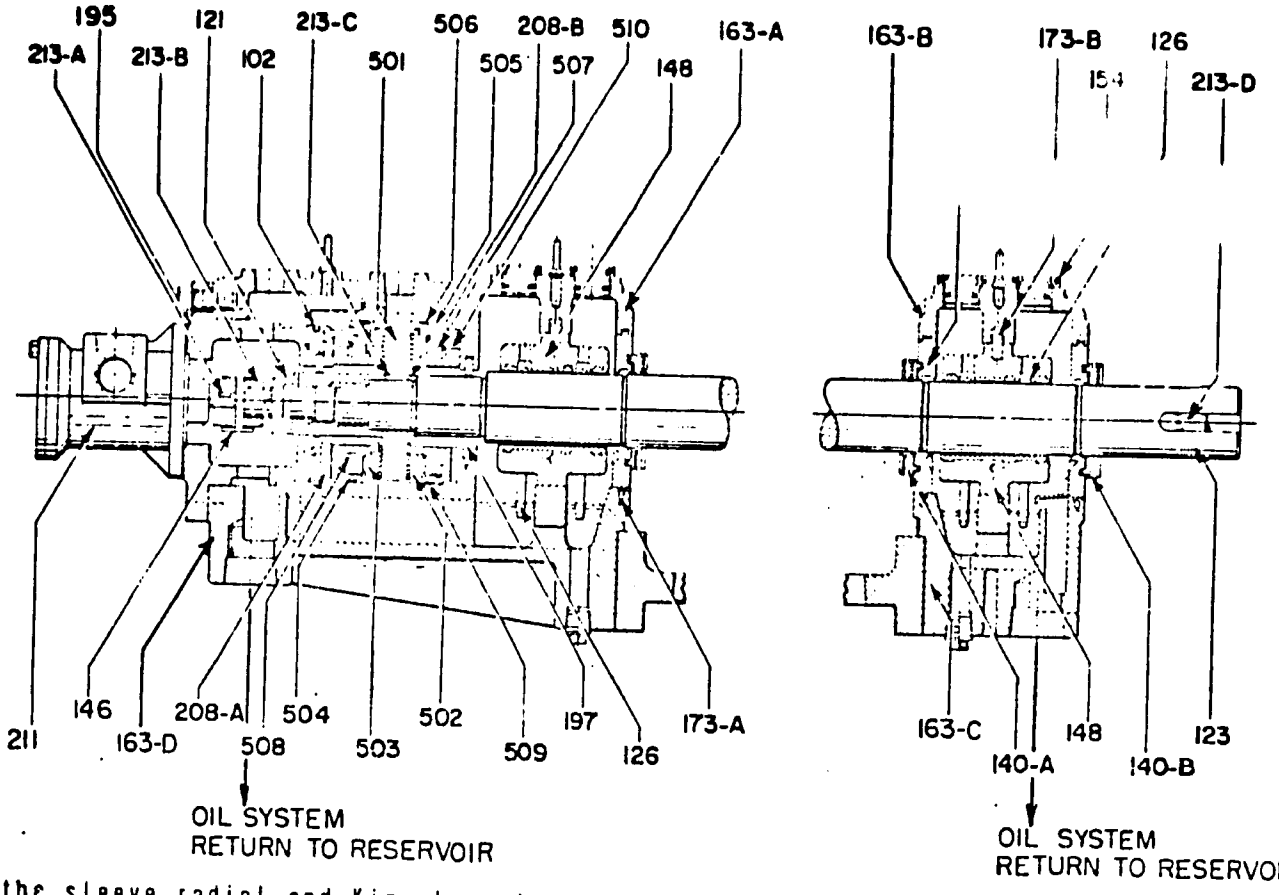

On the sleeve radial and Kingsbury type thrust bearing pumps, the radial bearings on both the inboard and outboard ends are of the sleeve type babbitt lined. In the outboard housing the sleeve type radial bearing is combined with a Kingsbury type thrust bearing. Force feed lubrication is provided to all radial and thrust bearings, and oil ring lubrication is added to each radial bearing as a safety feature. The driver can be lubricated from the same system. See drawing on page 24.02 - for details.

Unnumbered parts in the illustrations are the same as corresponding parts shown with numbers.

PART NO.	DESCRIPTION	PART NO.	DESCRIPTION	PART NO.	DESCRIPTION
102	"O" Ring	163-D	Bearing Housing	213-D	Key
121	Locknut	164-A	Bearing Cover	501	Bearing Collar
123	Shaft	164-B	Bearing Cover	502	Shoe (Babbitt Faced)
126	Oil Ring	173-A	Pin	503	Shoe Support
140-A	Deflector Disc	173-B	Pin	504	Base Ring (in Halves)
140-B	Deflector Disc	197	Seal Ring	505	Key (Base Ring)
146	Shaft Coupling	208-A	Shaft Adjusting Shim	506	Key Screw (Base Ring)
148	Journal Bearing	208-B	Bearing Adjusting Shim	507	Inner Leveling Plate
154	Inspection Cover	211	Oil Pump	508	Outer Leveling Plate
163-A	Bearing Housing	213-A	Key	509	Set Screw
163-B	Bearing Housing	213-B	Key	510	Dowel
163-C	Bearing Housing	213-C	Key		

Supersedes Drawing No. WP-198

DRAWING NO. WP-399

SCHEMATIC DIAGRAM of KINGSBURY STANDARD LUBRICATION SYSTEMS

SCHEMATIC WITHOUT AUXILIARY PUMP

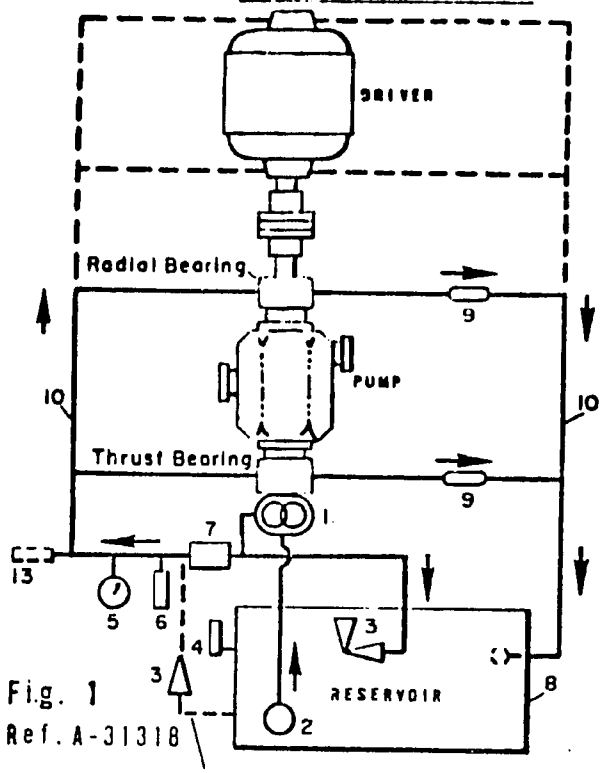

Fig. 1
Ref. A-31318

Relief valve located here when high pressure cooler is required.

BFW Pump

SCHEMATIC WITH AUXILIARY PUMP

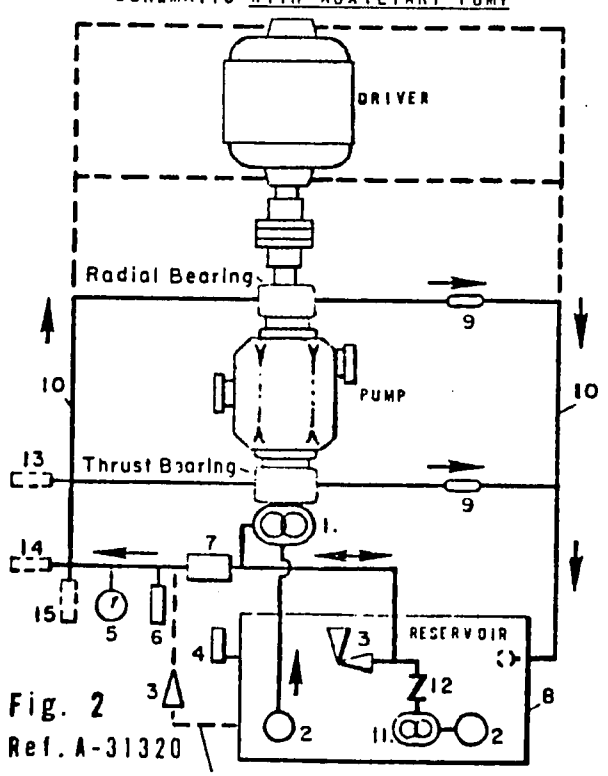

Fig. 2
Ref. A-31320

Relief valve located here when high pressure cooler is required

With the Kingsbury Bearing Pressure Lubricating System, oil is pumped from the reservoir, through a filter by the shaft-driven oil pump and is then passed through a pressure relief valve and heat exchanger to assure correct pressure and temperature before entering the main pump thrust and journal bearings. A reservoir of ample capacity, pressure gauge, thermometer and piping are provided with the standard system.

A motor driven auxiliary oil pump can also be provided to pressurize the system before the main pump is started or during failure of the shaft driven oil pump.

Pressure switches can be installed to provide controls for sounding alarms during low oil pressure, delay starting of main pump until the auxiliary oil pump has provided adequate pressure, or shut off auxiliary oil pump after main pump has started. Also, a pressure switch can be arranged to switch on the auxiliary on failure of shaft-driven oil pump.

GENERAL

The STANDARD systems are designed to:

a. Supply lubricating oil to pump bearings at 8/12 psi.
b. Have 5 GPM at 8/12 psi available for lubrication of driver bearings.
c. Utilize oil at 150 SSU at 100° F.
d. Use 10 GPM of 90° F. cooling, 75 psi pressure, all conditions maximum.

The following is included as standard equipment in Schematic Drawing, Fig. 1:

Item	Description	Type - Model
1	Shaft-Driven Oil Pump	De Laval, IMO No. 3E (Limited to 3600 RPM Max.)
2	Filter	Marvel Sump Type (with bypass valve)
3	Pressure Relief Valve	3/4" Consolidated (Set for 8 psi)
4	Oil Level Indicator	Gits Sight Glass
5	Pressure Gauge	2" Dia. Dial - Ashcroft
6	Thermometer	3" Dia. Dial - Weston
7	Heat Exchanger	Cooley No. 312 (Type two pass)
8	Reservoir	15 GPM Capacity
9	Sight Flow Indicators	Clear Tygon Tubing
10	Piping	Steel Tubing and Pipe with screwed fittings

IN ADDITION TO THE ABOVE THE FOLLOWING ADDITIONAL EQUIPMENT WILL BE SUPPLIED WITH SCHEMATIC DRAWING, FIG. 2.

11	Auxiliary Motor-Driven Oil Pump	De Laval IMO No. 3E with 1/2 BHP 3600 RPM Motor
12	Check Valve	3/4" Crane No. 1246

The FOLLOWING is a list of some of the additional equipment that is also available at extra cost:

13	Pressure Switch for Low Pressure Alarm	Allen Bradley No. 836
14	Pressure Switch for Main Pump - Start Up	Allen Bradley No. 836
15	Pressure Switch for Auxiliary Oil Pump Cut "In" at 5 psi and Cut "Out" at 15 psi oil pressure	Allen Bradley No. 836

High Speed Shaft-Driven IMO Pump - De Laval #A21M. — Piping to and from driver (Only if driver sent to factory for mounting). — Flanged pipe fittings. Bull's Eye Sight Flow Indicators. — Line Type Filters. — Larger capacity reservoir (in excess of 15 gallons). — Higher pressure heat exchangers.

We reserve the right to substitute equal or better equipment in the above.

Supersedes Drawing No. WP-249

DRAWING NO WP-407

STUFFING BOX ASSEMBLY

PACKING AND SEAL ARRANGEMENTS FOR HORIZONTAL SPLIT PUMPS.

FIG-1
STANDARD PACKED BOX

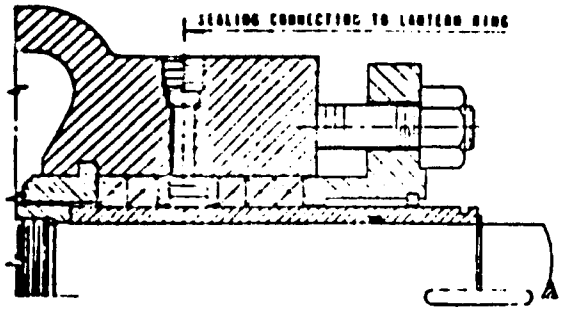

► For general applications on cool and clean pumpage up to 250°F. and approximately 150 PSI max. press.

FIG-2
STANDARD BOX WITH MECHANICAL SEAL

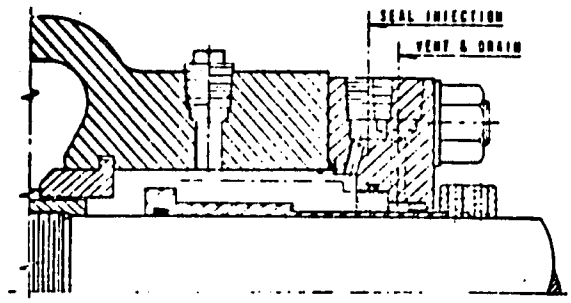

Application limited by pumpage and seal manufacturer's limitations.

FIG-3
PACKED BOX WITH INSERT COOLING JACKET AND INJECTION

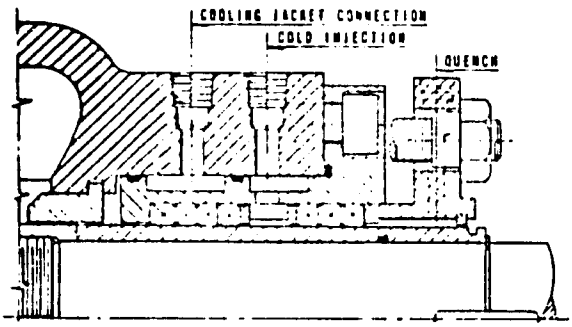

For boiler feed and hot pumpage above 250°F. Source of injection liquid should be specified when this arrangement is selected.

FIG-4
MECHANICAL SEAL WITH INSERT COOLING JACKET

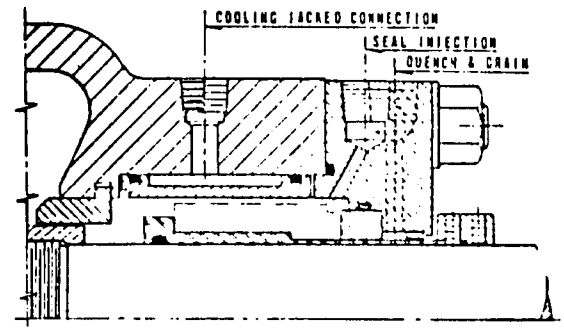

Recommended for dead ended seal applications or for pumps kept at operating temperature on standby service

BFW Pump

FIG-5
MECHANICAL SEAL WITH PUMPING RING

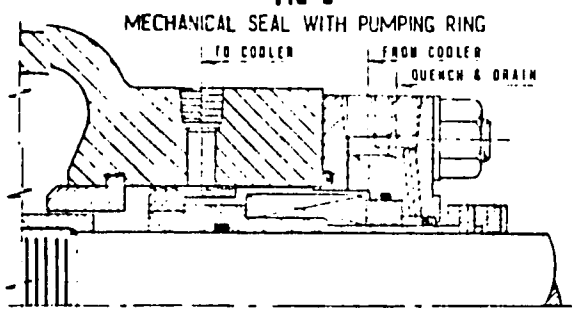

► For high temperature pumps operating above normal mechanical seat temperature limitations. Cooling jacket recommended above 350°F.

FIG-6
PACKINGLESS BOX

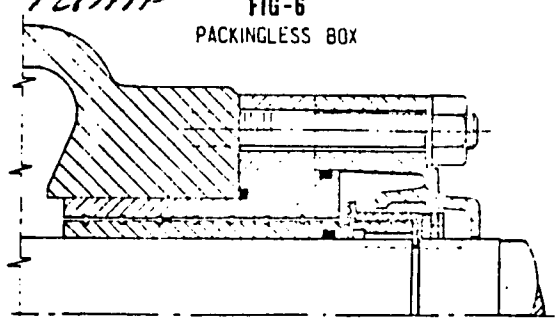

Suitable for cool pumpage and high suction pressures and where small amount of leakage can be tolerated.

Other variations of the above arrangements can be provided on request

RECOMMENDED FLOW REQUIREMENTS FOR COOLING AND INJECTION

GPM per Box	Location
¼ to ½	Sealing connection to Lantern Ring (Fig. 1 & 3) 10 psi above suction pressure with pumpage. Contamination no problem. Lower than suction pressure with raw water. Contamination a problem.
2	Cooling Jacket (Fig. 3 & 4) Lower than suction pressure.
¼	Gland Quench (Fig. 2, 3, 4 & 5) Nominal pressure.
► *2 to 4	Mechanical Seal Injection (Fig. 2, 4 & 5) 20 psi min. above suction pressure.

*5 to 10 GPM required for high speed and/or high pressure applications

Stuffing boxes are designed to accomodate Standard Seal Arrangements of all Mechanical Seal Manufacturers.

Supersedes Drawing No. WP-247, dated May 12, 1965.

DRAWING NO. WP-247-1

PIPING ARRANGEMENT

SCHEMATIC PIPING DIAGRAM for MULTI - STAGE PUMPS

TYPICAL PIPING INSTALLATION for SEAL-CIRCULATION and BEARING COOLING

Fig.-4
Seal Circulation
thru Single Separator
Ref. B-13903

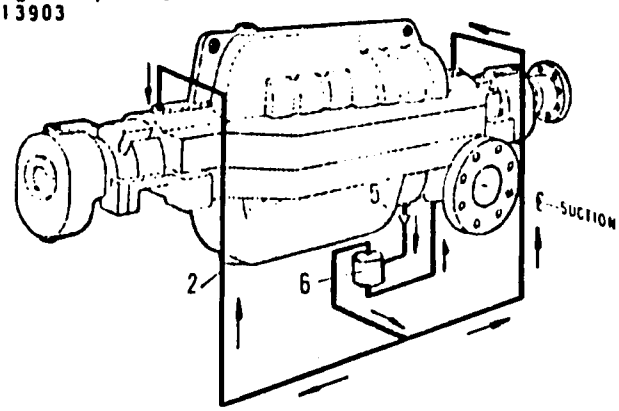

Fig.-5
Seal Circulation
thru Double Separators
Ref. B-14560

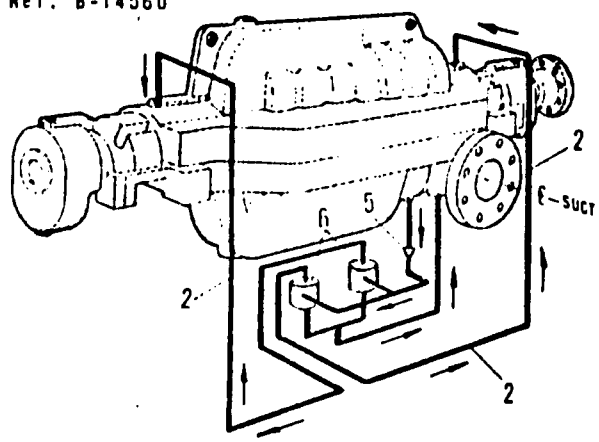

NOTE: FIG.-4 and FIG.-5 SHOWS FLOW FROM FIRST STAGE TO EITHER SINGLE OR DOUBLE SEPARATORS WITH CLEANED PUMPAGE GOING TO EACH STUFFINGBOX (MECHANICAL SEAL) AND CONTAMINATED PUMPAGE TO PUMP SUCTION.

BFW Pump

Fig.-6
Seal Circulation from Pumping Ring
thru Double Heat Exchangers
Ref. 240962/4

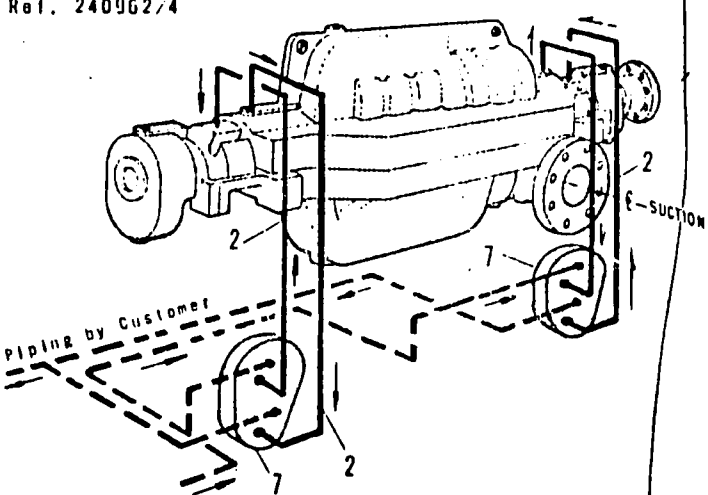

NOTE:
FIG.-6 SHOWS COOLANT FLOW FROM PUMPING RING THRU HEAT EXCHANGER TO BOTH STUFFING BOXES FOR MECHANICAL SEAL INJECTION.

Fig.-7
Seal Circulation thru Single Heat
Exchanger with Bleed-Off from Stage 1

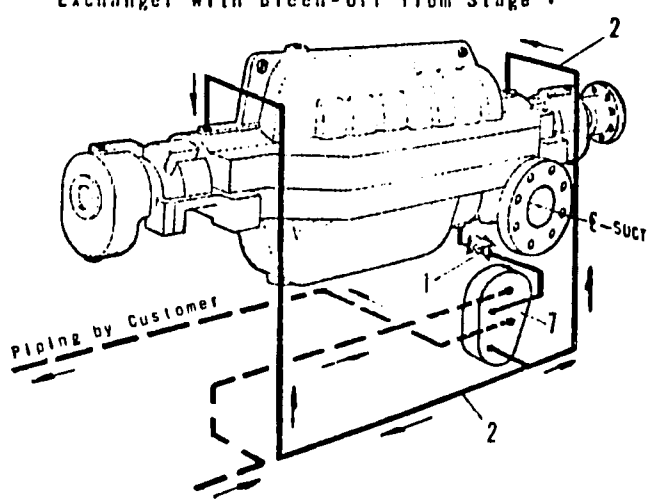

NOTE:
FIG.-7 SHOWS PUMPAGE FLOW FROM FIRST STAGE DISCHARGE THRU HEAT EXCHANGER TO BOTH STUFFING BOXES FOR MECHANICAL SEAL INJECTION.

DRAWING NO. WP-248

Westinghouse

Squirrel Cage Life-Line D Motors Drip-Proof and Weather Protected Type I

Short Shafts for Coupled Service
Anti-Friction and Split Sleeve Bearings
Frames 6808-6810
1800 Rpm and Slower

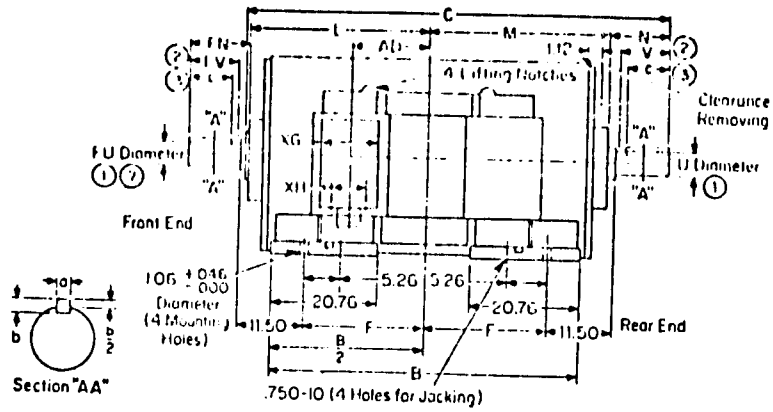

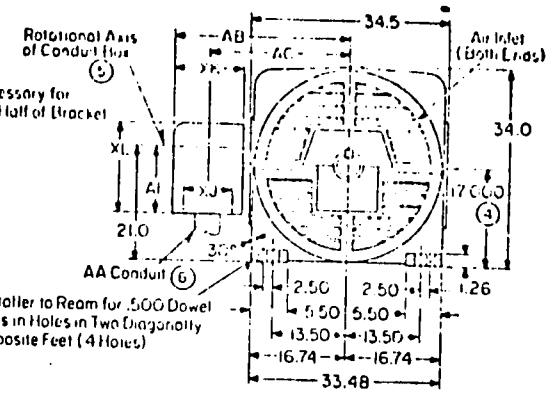

Dimensions, Inches Not to be used for construction purposes unless dimensions are approved.

Applying to each frame number

Frame No.	B	C	F	L	M	AD	Rear Shaft Extension U①	Key Size a	b	c③	N	V②	Front Shaft Extension⑦ FU①	Key Size a	b	c③	FN	FV②	Recommended Coupling Bore Min.	Max.	Approx. Wt., Pounds
6808-S	48.50	67.34	18.00	29.00	29.00	10.38	4.375	1.00	1.00	7.00	9.26	8.50	4.375	1.00	1.00	7.00	9.26	8.50	4.3715	4.3725	5830
6808-L	48.50	68.34	18.00	29.00	29.00	10.38	4.875	1.25	1.25	8.00	10.26	9.50	4.875	1.25	1.25	8.00	10.26	9.50	4.8715	4.8725	6100
6809-S	52.50	71.34	20.00	31.00	31.00	12.38	4.375	1.00	1.00	7.00	9.26	8.50	4.375	1.00	1.00	7.00	9.26	8.50	4.3715	4.3725	6770
6809-L	52.50	72.34	20.00	31.00	31.00	12.38	4.875	1.25	1.25	8.00	10.26	9.50	4.875	1.25	1.25	8.00	10.26	9.50	4.8715	4.8725	6990
6810-S	57.50	76.34	22.50	33.50	33.50	14.88	4.375	1.00	1.00	7.00	9.26	8.50	4.375	1.00	1.00	7.00	9.26	8.50	4.3715	4.3725	7320
6810-L	57.50	77.34	22.50	33.50	33.50	14.83	4.875	1.25	1.25	8.00	10.26	9.50	4.875	1.25	1.25	8.00	10.26	9.50	4.8715	4.8725	7600
6810-G	57.50	78.58	22.50	33.50	33.50	14.86	5.500	1.25	1.25	9.25	11.50	10.75	5.500	1.25	1.25	9.25	11.50	10.75	5.4965	5.4975	7700

Fabricated Steel Conduit Box⑥

Standard Conduit Box, XG=8.0

AA	AB	AC	AF	XH	XJ	XL	XK
⑥	32.4	25.8	14.0	5.0	10.0	18.0	13.0

Special Conduit Box, XG=13.0

AA	AB	AC	AF	XH	XJ	XL	XK
⑥	32.4	25.8	14.0	10.0	10.0	18.0	13.0

Special Conduit Box, XG=26.0

AA	AB	AC	AF	XH	XJ	XL	XK
⑥	32.4	25.8	14.0	23.0	10.0	18.0	13.0

Cast Iron Conduit Box⑧

Special Conduit Box, XG=11.0

AA	AB	AC	AF	XH	XJ	XL	XK
⑥	29.2	23.9	10.0	9.0	7.5	15.3	9.8

Special Conduit Box, XG=14.0

AA	AB	AC	AF	XH	XJ	XL	XK
⑥	32.3	25.8	13.0	10.0	10.0	18.8	12.9

① Manufacturers allowance +.000" −.001".
② Dimensions V & FV represent usable length of shaft.
③ Motors are factory balanced with a half key of length c per NEMA 1-12.06.
④ Shaft height dimension may be +.000" −.060". When exact dimension is required, shims up to .060 inch may be necessary.
⑤ Conduit boxes may be rotated in steps of 90° around center determined by dimension AD.
⑥ Customer should specify either fabricated steel or cast iron conduit box, identifying box by "XG" dimension. If he specifies size of conduit, we will drill clearance hole in fabricated steel box or pipe tap hole in cast iron box for size conduit he specifies.

Dimensions XH & XJ represent usable drilling area for customer's conduit. Dimensions AC & AD represent center of this area.

If conduit opening (AA) is not specified on the order, motor will be shipped with conduit box undrilled.

⑦ Front shaft extension furnished only when specially ordered.
⑧ Cast iron conduit boxes are normally supplied on Weather Protected Type I motors. Drip-proof motors are supplied with fabricated steel conduit box unless otherwise specified.

Note: All sleeve bearing motors on 6800 frame series have ¼ inch minimum end play.

Use of limited end float couplings are required on all sleeve bearing motors as recommended by NEMA MG 1-14.38.

Caution Note: Air inlet openings are in the ends of motor and air exhaust openings are the sides of motor. When installing motor, avoid locating motor so that adjacent structures are closer than 4 inches to the motor ends and sides. Also make certain that no adjacent structure causes exhaust air to be deflected from exhaust openings into inlet openings.

Caution Note: All motors are dynamically balanced to meet or better the limit of NEMA Standards Mg1-12.05 vibration in service, however, is not determined not only by balance of motor and driven unit but may be greatly affected by the base on which they are mounted. To minimize vibration, a rigid base must be provided for motor and driven unit.

Reproduced from Drawing 2743-D-68, sub 8

Approval

Customer [illegible]		Customer Order [illegible]	
S.O. [illegible]	Item 1	Application	
Hp [illegible]	Rpm [illegible]	PH [illegible]	HZ [illegible] Volts [illegible]
Frame [illegible]	Enclosure [illegible]	State [illegible]	
Certified By [illegible]	Date [illegible]	[illegible]	

Westinghouse Electric Corporation
Large Ac and Dc Motor Division, Buffalo, N. Y. 14240
Printed in USA

May, 1972
Supersedes DS 3141, page 63, dated October, 1970
E. C/1738/DS

IMPORTANT

BINGHAM TYPE MSD

10 STAGE SINGLE SUCTION - DOUBLE VOLUTE PUMPS

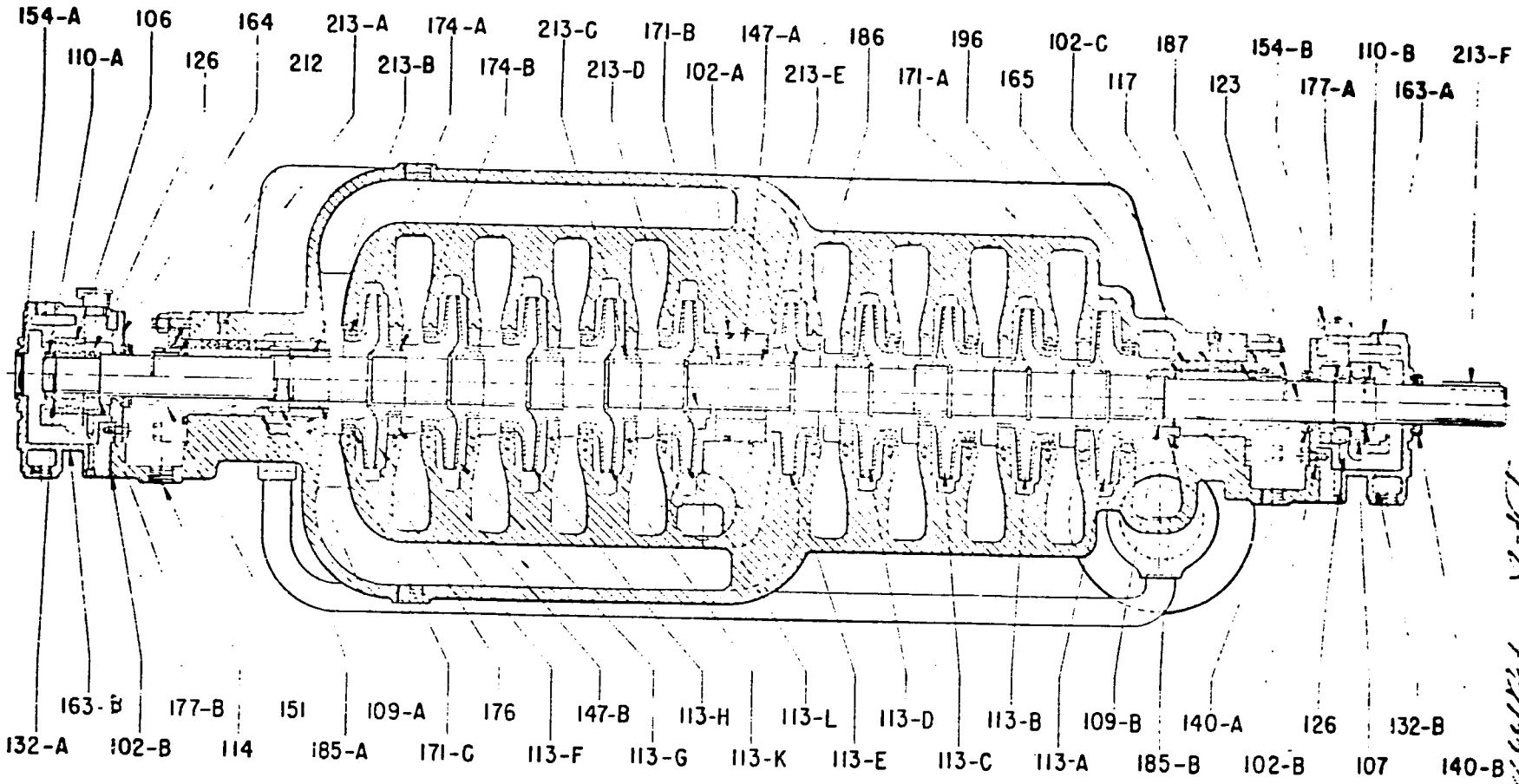

Improved parts in the illustrations are the same as corresponding parts shown with numbers

PART NO.	DESCRIPTION	PART NO.	DESCRIPTION	PART NO.	DESCRIPTION	PART NO.	DESCRIPTION	PART NO.	DESCRIPTION
102-A	"O" Ring	113-C	Impeller-Stage 3	132-A	Lockwasher	165	Lantern Ring	185-A	Throttle Bushing
102-B	Gasket	113-D	Impeller-Stage 4	132-B	Lockwasher	168	Oil Gauge (Not Shown)	185-B	Throat Bushing
102-C	"O" Ring	113-E	Impeller-Stage 5	140-A	Deflector Disc	171-A	Shaft Sleeve	186	Thrust Ring
102-D	Gasket-Case (Not Shown)	113-F	Impeller-Stage 6	140-B	Deflector Disc	171-B	Center Sleeve	187	Retainer Ring
106	Thrust Bearing	113-G	Impeller-Stage 7	147-A	Stage Piece	171-C	Throttle Sleeve	196	Packing
107	Radial Bearing	113-H	Impeller-Stage 8	147-B	Stage Piece	174-A	Impeller Ring, Eye	212	Split Bushing
109-A	Shaft Nut	113-K	Impeller-Stage 9	151	Mechanical Seal	174-B	Impeller Ring, Hub	213-A	Key
109-B	Shaft Nut	113-L	Impeller-Stage 10	154-A	End Cover	176	Casing Ring	213-B	Key
110-A	Locknut	114	Case-Bottom Half	154-B	Inspection Cover	177-A	Oil Ring Mtg. Sleeve	213-C	Key
110-B	Locknut	117	Gland	163-A	Bearing Housing	177-B	Oil Ring Mtg. Sleeve	213-D	Key
113-A	Impeller-Stage 1	123	Shaft	163-B	Bearing Housing	179	Case-Top Half	213-E	Key
113-B	Impeller-Stage 2	126	Oil Ring	164	Bearing Cover			213-F	Key

DRAWING NO. WP-238

Bingham Factories: PORTLAND, OREGON • VANCOUVER, B.C., CANADA

BINGHAM PUMP COMPANY PRINTED IN U.S.A.

MSD CROSS SECTION

C3

FLOW DIAGRAM TYPE MSD

SINGLE SUCTION

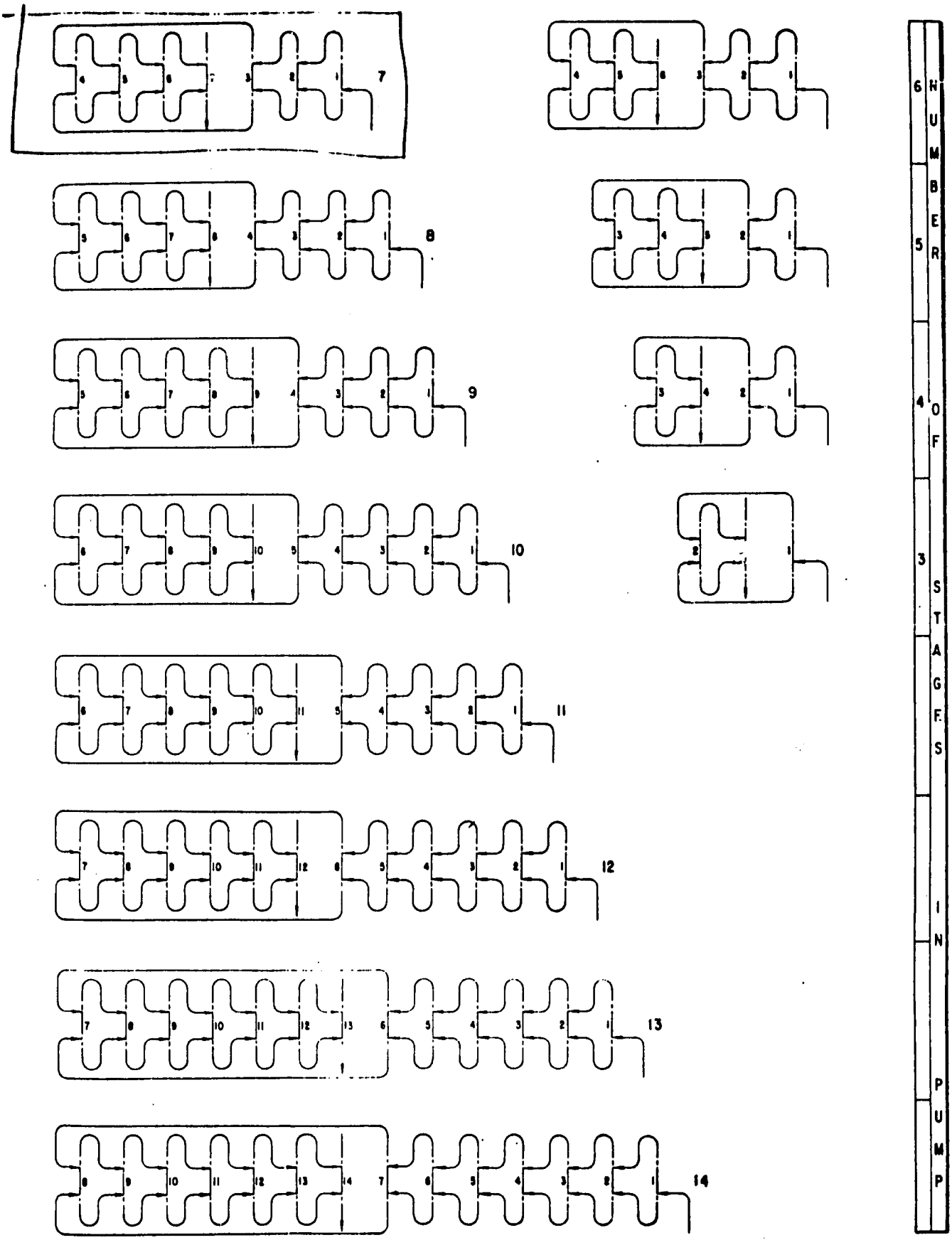

Supersedes WP-241

DRAWING NO. WP-311

OUTLINE DIMENSIONS TYPE MSD
SINGLE SUCTION FIRST STAGE

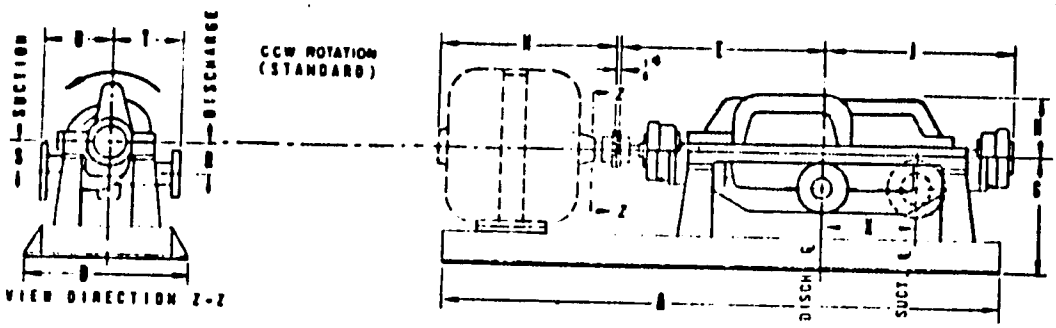

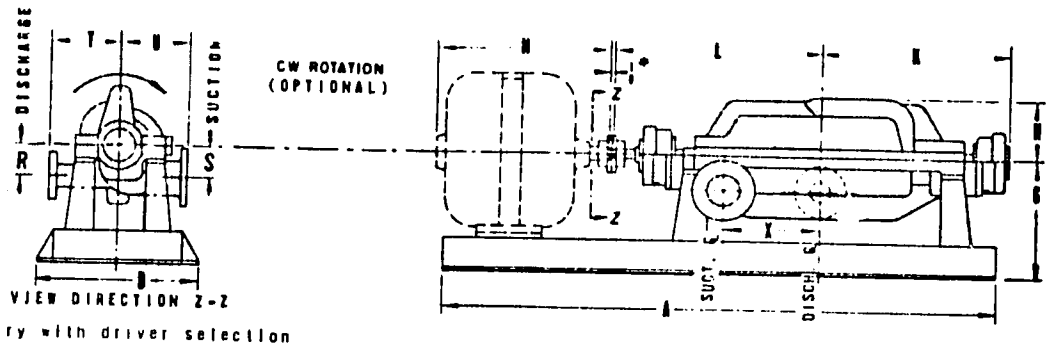

Dimensions A and N vary with driver selection

* If spacer coupling is used allow 7 inches between shaft ends.

** Dimensions J & K are based on Standard Ball Bearings. Add 6 inches to J & K for sleeve bearings, and add 15 inches to J & K for Kingsbury bearings.

Pumps are available with either clockwise (CW) or counterclockwise (CCW) rotation with dimensions as shown.

Minimum flange rating on nozzles : Cast steel casing – 300# ASA.. Cast iron Casing – 250# ASA.

All dimensions are in inches and for guidance only. Do Not use for construction unless certified.

[illegible]	[illegible]	[illegible]	[illegible]	[illegible]	[illegible]	[illegible]	[illegible]	[illegible]	[illegible]	[illegible]	[illegible]	[illegible]
[illegible]	[illegible]	[illegible]	[illegible]	[illegible]	[illegible]	[illegible]	[illegible]	[illegible]	[illegible]	[illegible]	[illegible]	[illegible]
[illegible]	[illegible]	[illegible]	[illegible]	[illegible]	[illegible]	[illegible]	[illegible]	[illegible]	[illegible]	[illegible]	[illegible]	[illegible]
[illegible]	[illegible]	[illegible]	[illegible]	[illegible]	[illegible]	[illegible]	[illegible]	[illegible]	[illegible]	[illegible]	[illegible]	[illegible]
[illegible]	[illegible]	[illegible]	[illegible]	[illegible]	[illegible]	[illegible]	[illegible]	[illegible]	[illegible]	[illegible]	[illegible]	[illegible]

[illegible]	[illegible]	[illegible]	[illegible]	[illegible]	[illegible]	[illegible]	[illegible]	[illegible]	[illegible]	[illegible]	[illegible]	[illegible]
[illegible]	[illegible]	[illegible]	[illegible]	[illegible]	[illegible]	[illegible]	[illegible]	[illegible]	[illegible]	[illegible]	[illegible]	[illegible]
[illegible]	[illegible]	[illegible]	[illegible]	[illegible]	[illegible]	[illegible]	[illegible]	[illegible]	[illegible]	[illegible]	[illegible]	[illegible]
[illegible]	[illegible]	[illegible]	[illegible]	[illegible]	[illegible]	[illegible]	[illegible]	[illegible]	[illegible]	[illegible]	[illegible]	[illegible]

Supersedes Drawing NO. WP-313 and 314

DRAWING NO. WP-378

DYNMAC CORPORATION
Dynamic Machinery
2210 WEST 75th • PRAIRIE VILLAGE, KANSAS 66208 • A.C. 913 362 9636

May 28, 1974

File: BKC-694, PE-9537 A

Black & Veatch International
P.O. Box 8405
Kansas City, Missouri 64114

Attention: Mr. L. J. Svoboda

Reference: Perusahaan Umum, Listrik Negara
Semarang Steam Power Plant Units 1 & 2
Boiler Feed Pumps - Specification 6104-M-26A

Gentlemen:

Bingham-Willamette Company has advised that we are now in a position to offer you a firm price bid covering the Boiler Feed Pumps on the above subject job. We have just been hit by an increase on our outside suppliers which has forced us to change our price of February 1 for Item C.1.1 from $455,474.00 to a present price of $481,474.00. Further, due to the unstable deliveries of auxiliary equipment, we propose shipment in 77 weeks from date of order and liquidated damages would not take effect until that time and then only if the delay of this equipment jeopardizes start up operations of your plant.

The price to be inserted into the contract covering Item C.1.3.3 under the heading of Expenses should read 20,750 rupiahs per day. Under Item C.1.3.4 Transportation, please change our figure from $3,274.00 to $2,130.00 and directly following it, the figure should read 166,000 rupiahs.

We must insist on the following Bingham-Willamette price policy. This quotation is firm for acceptance for 30 days from this date. We will enter into a firm price contract not to exceed two years, however, we reserve the right to review our price at the time of the placement of the order. Terms will include progress payments as follows: (a) 10% of price ninety (90) days from date of placement of order, (b) 40% of contract price nine months from date of placement of order, (c) balance at time of shipment. Major buyout items that are not an integral part of the pumps (motors, gears, etc) will be furnished subject to the terms and conditions imposed by the supplier which includes any pricing modification occurring after placing of order. We will furnish you, upon request, copies of quotes from outside sources and copies of invoices. We can furnish a bid bond immediately should you require it.

If we can be of further assistance, please call us.

Yours very truly,

John L. Battle

JLB:bk
Attachments
cc: Dynmac - Tulsa
Bingham - Portland (Pitman)

DYNMAC CORPORATION
Dynamic Machinery
2210 WEST 75th • PRAIRIE VILLAGE, KANSAS 66208 • A C 913 362 9636

June 5, 1974

File: BKC-694, PE-9537 A

Black & Veatch International
P.O. Box 8405
Kansas City, Missouri 64114

Attention: Mr. L. J. Svoboda

Reference: Perusahaan Umum, Listrik Negara
Semarang Steam Power Plant Units 1 & 2
Boiler Feed Pumps - Specification 6104-M-26A

Gentlemen:

We are now prepared to offer our final price proposal covering the above contract. Our firm price bid for the equipment will be $480,991.00. This price includes a maximum of 5% liquidated damages. The liquidated damages will be calculated on the price of $480,991.00 not including any escalation. We propose to ship this equipment within eighteen months from date of order and liquidated damages will not take effect until that date and then only if the delay of this equipment jeopardizes the start up operation of your plant.

The maximum escalation on this contract will be $32,470.00. This is to cover any increase in the price of the auxiliary (gears & motors) equipment. We will furnish you a copy of the Bingham Willamette purchase order to these companies and also a copy of their invoice to Bingham-Willamette. You will be billed the exact amount of difference up to a total of $32,470.00.

The price to be inserted into the contract covering Item C.1.3.3 under the heading of Expenses should read 20 750 rupiahs per day. Under Item C.1.3.4 Transportation, please change our figure from $3,274.00 to $2,130.00 and directly following it, the figure should read 166,000 rupiahs.

We are attaching a copy of our Exceptions and Clarifications to this contract.

We are adding one complete additional rotating element and it is included in the base price of $480,991.00.

We will furnish a 100% performance bond for this contract.

Our terms of payment are as follows, based on receipt on an order in June 1974. All percentages are based on the total contract price.

15% September 1974
15% December 1974
15% March 1975
15% June 1975
30% on shipment or when equipment is ready for shipment.
10% not to exceed 24 months from date of shipment.

We would expect the spare parts to cover two motors and two gears to be approximately $30,000.00. This would include for the gears pinions, gears and complete gaskets for two units along with complete sets of bearings for two motors.

We are in contact with the General Electric Company as regards the boiler feed pump motors and are awaiting their reply and pricing.

I wish to thank you very much for your cooperation and the professionalism which has been exhibited in the conduct of the negotiations on this contract.

Yours very truly,

John L. Battle

JLB:bk
Attachment

cc: Bingham - Portland (Pitman)
Dynmac - Tulsa

EXCEPTIONS AND CLARIFICATIONS
SEMARANG STEAM POWER PLANT UNITS 1 & 2
BLACK & VEATCH
SPECIFICATION 6104-M-26A

1. Bingham-Willamette Company will provide expected sound levels for Boiler Feed pumps later. However, due to difficulty in isolating testing equipment from outside or external sound sources, Bingham-Willamette company cannot guarantee that sound level tests would show the sound levels of equipment furnished to be less than the levels called for in PP 2A.8. No sound tests are included in our pricing.

2. The motor manufacturer cannot accept, or comment, on the portion of PPDT.5.17 having to do with single frequency air-borne windage noise until it is further identified. Motors will be designed for a noise level of 90 DBA at 5 feet in accordance with IEEE-85. Noise tests, if required, can be made in accordance with IEEE-85 for a price addition of $1,076.00 each.

3. Bingham-Willamette Company will agree to a thirty day waiting period for proposed contract changes provided this takes place in the first forty five days of the contract.

4. Freights are CIF from Portland, Oregon. Rates are not firm in any way and are only an estimation.

5. Price forboiler feed pumps includes witnessed performance, hydro and NPSH tests. These tests will be run at reduced speed to allow the exclusion of the gear box.

6. Spare parts consisting of a rotor complete with impellers, case and impeller wear rings, seals, bearings, etc. and two couplings are included in the price of the Boiler Feed Water Pumps.

BEST AVAILABLE COPY

JLB:hk
6/4/74

John L. Battle

CONTRACT AGREEMENT

THIS CONTRACT AGREEMENT, made and entered into this 10 of [illegible] 1974, by and between the PERUSAHAAN UMUM LISTRIK NEGARA, Party of the First Part and hereinafter called "Owner", and BINGHAM-WILLAMETTE COMPANY, a Division of Guy F. Atkinson Company, a Nevada corporation with its principal office in San Francisco, California, Party of the Second Part and hereinafter called "Contractor".

WITNESSETH:

THAT WHEREAS, the Owner has caused to be prepared specifications, plans and other contract documents for the work as herein specified; and

WHEREAS, the said Contractor has submitted to the Owner a tender in accordance with the terms of this Contract Agreement; and

WHEREAS, the Owner has determined and declared the aforesaid Contractor has submitted the lowest evaluated proposal for the said work and has duly awarded to the said Contractor a contract therefor, for the sum or sums named in the Contractor's Proposal, a copy thereof being attached to and made a part of this Contract Agreement;

NOW, THEREFORE, in consideration of the compensation to be paid to the Contractor and of the mutual agreements herein contained, the parties to these presents have agreed and hereby agree, the Owner for itself and its successors, and the Contractor for itself, himself, or themselves and its, his or their successors and assigns, or its, his or their executors and administrators as follows:

ARTICLE I. That the Contractor shall furnish fas U.S.A. port of shipment; furnish ocean freight (including port charges for handling, loading, and unloading), ocean cargo insurance and surcharges; and deliver to the Port of Semarang, Indonesia, boiler feed pumps (for Units 1 and 2) and spare parts as specified in accordance with the provisions of the contract documents as defined in Article GC.1 of the General Conditions which are attached and made a part hereof, and shall execute and complete all work included in and covered by the Owner's official award of this Contract Agreement to the said Contractor.

ARTICLE II. That the Owner shall pay to the Contractor for furnishing equipment and materials and spare parts designated in the foregoing Article I as embraced in this Contract Agreement, and the Contractor will accept as full compensation therefor, the sum (subject to adjustments as provided by the contract) of FOUR HUNDRED EIGHTY THOUSAND NINE HUNDRED NINETY-ONE DOLLARS ($480,991.00) for the Base Contract Price; the sum of thirty thousand dollars ($30,000) for spare parts and the sum of thirty-two thousand four hundred and seventy dollars ($32,470) as maximum escalation (subject to adjustment as provided by the Contract); payment to be made in United States currency in the manner provided in the contract documents attached hereto.

(PLN 6104)
(AUXILIARY PUMPS M-26A)
(BOILER FEED PUMPS)
060874

That the Owner shall pay to the Contractor for Administrative expenses the sum of TWO HUNDRED FORTY-THREE THOUSAND NINE HUNDRED FIFTY-SEVEN RUPIAHS (Rp 243,957 IND). Administrative expenses shall be paid by the Owner to the Contractor from the budget of Proyek Survey Dan Perencanaan Umum Kelistrikan (S.P.U.K) Jakarta immediately upon signing of the contract.

ARTICLE III. That the Owner shall pay to the Contractor for furnishing the actual cost of ocean freight (including port charges for handling, loading, and unloading), ocean cargo insurance and surcharge on equipment and materials and spare parts designated in the foregoing Article I from the U.S.A. port of shipment to the Port of Semarang, Indonesia, and the Contractor will accept as full compensation therefor the estimated sum of SIXTEEN THOUSAND NINE HUNDRED FORTY-FIVE DOLLARS ($16,945.00); subject to final adjustment to actual cost at the conclusion of the shipment of all required equipment, materials, and spare parts; payment to be made in United States currency in the manner provided in the contract documents attached hereto.

ARTICLE IV. That the Contractor shall furnish technical field services upon request by the Owner and that the Owner shall pay to the Contractor for furnishing such services, and the Contractor will accept as full compensation therefor, payment in accordance with the following schedule:

Per daily rate for each technical representative based on six (6) eight hour days per week

THREE HUNDRED TEN DOLLARS ($310.00 USA)

Living costs and other expenses incurred in Indonesia for each technical representative at actual cost but not to exceed the following per diem:

TWENTY THOUSAND SEVEN HUNDRED FIFTY RUPIAHS (Rp 20,750 IND)

Round trip economy transportation including living expenses and expenses incidental to travel, to and from Semarang, Indonesia, at actual cost.

The total costs for the service representative is estimated to be TWENTY-THREE THOUSAND DOLLARS ($23,000.00 USA) and ONE MILLION SIX HUNDRED THOUSAND RUPIAHS (Rp 1,600,000 IND)

ARTICLE V. That time of delivery is of the essence of this Contract Agreement, and that the Contractor shall proceed with the specified work and shall conform to the schedule specified in Section 1A of the specifications.

(PLN 6104)
(AUXILIARY PUMPS M-26A)
(BOILER FEED PUMPS)
060574

ARTICLE VI. That in the event the Contractor shall fail to deliver the specified equipment and materials within the time period stipulated in the foregoing Article V, the Contractor shall be liable to the Owner for the amount of THREE HUNDRED DOLLARS ($300.00), as liquidated damages and not as a penalty, for each calendar day of delay in delivery of the equipment and materials in accordance with the provisions of Article GC.34 of the General Conditions; and that the total amount of said liquidated damages shall not exceed five per cent of the Base Contract Price for equipment and materials stated in Article II of this Contract Agreement and shown on the Basis of Contract Award of $480,991.00.

I.A.

DEPARTEMEN KEUANGAN REPUBLIK INDONESIA
DIREKTORAT JENDERAL PAJAK
INSPEKSI PAJAK JAKARTA SELATAN DUA.....

A

SURAT KUASA UNTUK MENYETOR BEA DAN DENDA BEA METERAI

Inspeksi Pajak Jakarta Sel.Dua.
Nomor 1.952.V/74.

Nama, jabatan dan tempat tinggal wajib bea atau pemohon.	G.F. COCKRELL. Representative dari Bingham Williamette Co. Jln. Nuri No. 11. Keb-Lama. JAKARTA SELATAN.	Jumlah bea dan denda meterai yang terhutang
Keterangan mengenai tanda yang harus dikenakan bea meterai dengan menyebutkan dasar pengenaannya dan besarnya tarip.	Surat Perjanjian Pemborongan No.....Tgl..... Antara Sub I dengan P.S. Direktur Pembangunan P.L.N. Jln. Sunan Ngampel No. 1. mengenai jual-beli Peralatan dari Luar-Negeri-Boiler Feed Pumps dengan nilai sebesar (US $ 583.406 X Rp.415,-) + Rp.1.343.957,- = Rp.243.957.447,- Bea Meterai cfm. ps. 56 ABM 1921 ditetapkan 1o/oo = Tindasan lainnya dibuat rangkap 14 a Rp.25,- =	=Rp.243.975,- =Rp. 350,-
Keterangan mengenai denda dengan menyebutkan dasar pengenaannya.	-8-JUL-74 00503 74N652054. — V N.	325.00
HARUS DIBAYAR : 12 Juli 1974.	Jakarta 5 Juli ..... 19 74. A.n. Kepala Inspeksi Pajak JAKARTA SELATAN DUA. KASIE P.T.L. (Drs. Sri Subiyati).	Jumlah: =Rp.244.325,- (Dua ratus empat ribu tiga dua puluh lima luh-us-h).-

INSPEKSI PAJAK JAKARTA SELATAN DUA

PEMBAYARAN

TINDASAN

PERHATIAN

TANDA, UNTUK MANA S.K.U.M. INI DIKELUARKAN, BARU BOLEH DITANDATANGANI SESUDAH BEANTA DIBAYAR LUNAS DI KANTOR KAS NEGARA / KANTOR (SENTRAL) GIRO POS (PP. 5 MAR. 1957)

Bentuk KP.BM.3

IN WITNESS WHEREOF, the parties hereto have executed this Contract Agreement as of the day and year first above written.

OWNER

PERUSAHAAN UMUM LISTRIK NEGARA

(Seal)

Attest _____ By: _____

CONTRACTOR

BINGHAM-WILLAMETTE COMPANY
a Division of Guy F. Atkinson Company

(Seal)

Attest _____ Assistant Secretary

By: _____
W. E. Sharp, Executive Vice President and General Manager

(PLN 6104)
(AUXILIARY PUMPS M-26A)
(BOILER FEED PUMPS)
060574

BASIS OF CONTRACT AWARD

The Contract Award is based on the Specifications and Documents for Auxiliary Pumps 6104-M-26A issued 29 October 1973; Addendum 1 dated 14 November 1973; Addendum 2 dated 18 December 1973; Addendum 3 dated 31 December 1973; Bingham-Willamette Company Proposal PE-9537 dated 24 January 1974, Bingham-Willamette Company (Dynmac Corporation letterhead for Bingham-Williamette) Proposal PE-9537A dated 28 May 1974, Bingham-Willamette Company (Dynmac Corporation letterhead for Bingham-Willamette) supplemental letter dated 5 June 1974, with exceptions and clarifications page, and PLN/Bingham-Willamette negotiations of June 3 and June 4.

The total contract price shall be established as follows:

C.1 Boiler Feed Pumps C.1.1 Equipment (Refer to Bingham-Willamette Company Proposal PE-9537A) including 2 Complete BFP Rotors	-	
Base Contract Price	$480,991.00	
Spare Parts	30,000.00	
Maximum Escalation on Auxiliary (Gears & Motors) Equipment	32,470.00	
Maximum Total Price for Materials and Equipment as Specified	$543,461.00	
Ocean Freight, Handling, and Insurance	16,945.00	
Service Representative	23,000.00	Rp 1,600,000 IND
Contractor Administrative Expenses	--	243,957 IND
TOTAL CONTRACT PRICE	$583,406.00	Rp 1,843,957 IND

PERFORMANCE BOND *

(See Instructions on reverse)

DATE BOND EXECUTED (Not later than date of contract): June 21, 1974

PRINCIPAL (Legal name and business address) (Contractor)
Bingham - Willamette Company, A Division of Guy F. Atkinson Company, a Nevada Corporation, 2800 N. W. Front Ave., Portland, Oregon U. S. A.

TYPE OF ORGANIZATION ("X" one)
☐ INDIVIDUAL ☐ PARTNERSHIP
☐ JOINT VENTURE x☒ CORPORATION

STATE OF INCORPORATION: Nevada

SURETY(IES) (Name(s) and business address(es))
Fidelity and Deposit Company of Maryland
3005 First National Bank Tower
Portland, Oregon 97201 **

PENAL SUM OF BOND

MILLION(S)	THOUSAND(S)	HUNDRED(S)	CENT(S)
	583	406	00

CONTRACT DATE: If Known 6-21-74

CONTRACT NO.: 6104 - M. - 26A

KNOW ALL MEN BY THESE PRESENTS, That we, the Principal and Surety(ies) hereto, are firmly bound to Perusahaan Umum Listrik Negara (hereinafter called PLN) in the above penal sum for the payment of which we bind ourselves, our heirs, executors, administrators, and successors, jointly and severally: *Provided*, That, where the Sureties are corporations acting as co-sureties, we, the Sureties, bind ourselves in such sum "jointly and severally" as well as "severally" only for the purpose of allowing a joint action or actions against any or all of us, and for all other purposes each Surety binds itself, jointly and severally with the Principal, for the payment of such sum only as is set forth opposite the name of such Surety, but if no limit of liability is indicated, the limit of liability shall be the full amount of the penal sum.

THE CONDITION OF THIS OBLIGATION IS SUCH, that whereas the Principal entered into the contract identified above;

NOW, THEREFORE, if the Principal shall:

Perform and fulfill all the undertakings, covenants, terms, conditions, and agreements of said contract during the original term of said contract and any extensions thereof that may be granted by PLN, with or without notice to the Surety (ies), and during the life of any guaranty required under the contract, and shall also perform and fulfill all the undertakings, covenants, terms, conditions, and agreements of any and all duly authorized modifications of said contract that may hereafter be made, notice of which modifications to the Surety (ies) being hereby waived.

IN WITNESS WHEREOF, the Principal and Surety (ies) have executed this performance bond and have affixed their seals on the date set forth above.

PRINCIPAL

Signature(s)	1. Betty A. Allen (Seal)	2. G. W. Wintz (Seal)	Corporate Seal
Name(s) & Title(s) (Typed)	1. Betty A. Allen, Assistant Secretary	2. G. W. Wintz, Division President	

INDIVIDUAL SURETY(IES)

Signature(s)	1. (Seal)	2. (Seal)
Name(s) (Typed)	1.	2.

CORPORATE SURETY(IES)

SURETY A	Name & Address	~~Fidelity and Deposit Co. of Maryland~~ 3005 First Nat'l Bank Tower, Portland,	STATE OF INC. Ore.	LIABILITY LIMIT
	Signature(s)	1. Richard W. Recob	2.	Corporate Seal
	Name(s) & Title(s) (Typed)	1. Richard W. Recob, Attorney-in-fact	2.	

25-105

* Deleted for Contract
** Added for Contract

PB-1

CORPORATE SURETIES (Continued)				
Name & Address		STATE OF INC.	LIABILITY LIMIT	Corporate Seal
Signature(s)	1	2		
Name(s) & Title(s) (Typed)	1	2		
Name & Address		STATE OF INC.	LIABILITY LIMIT	Corporate Seal
Signature(s)	1	2		
Name(s) & Title(s) (Typed)	1	2		
Name & Address		STATE OF INC.	LIABILITY LIMIT	Corporate Seal
Signature(s)	1	2		
Name(s) & Title(s) (Typed)	1	2		
Name & Address		STATE OF INC.	LIABILITY LIMIT	Corporate Seal
Signature(s)	1	2		
Name(s) & Title(s) (Typed)	1	2		
Name & Address		STATE OF INC.	LIABILITY LIMIT	Corporate Seal
Signature(s)	1	2		
Name(s) & Title(s) (Typed)	1	2		
Name & Address		STATE OF INC.	LIABILITY LIMIT	Corporate Seal
Signature(s)	1	2		
Name(s) & Title(s) (Typed)	1	2		

BOND PREMIUM	RATE PER THOUSAND	TOTAL
	$ 2.	$ 1, 167.

BEST AVAILABLE COPY

INSTRUCTIONS

1. This form is authorized for use in connection with contracts for construction work or the furnishing of supplies or services. There shall be no deviation from this form without approval by PLN.

2. The full [illegible] and business address of the Principal shall be [illegible] in the space designated "Principal" on the face of this form. The bond shall be signed by an authorized person. Where such person is signing in a representative capacity (e.g., an attorney-in-fact), but is not a member of the firm, partnership, or joint venture, or an officer of the corporation involved, evidence of his authority must be furnished.

3. (a) Corporations executing the bond as sureties must be authorized to act as sureties. Where more than a single corporate surety is involved, their names and addresses (city and state) shall be inserted in the spaces (Surety A, Surety B, etc.) headed "CORPORATE SURETY (IES)", and in the space designated "SURETY (ies)" on the face of this form only the letter identification of the Sureties shall be inserted.

(b) Where individual sureties execute the bond, they shall be two or more responsible persons. A completed Affidavit of Individual Surety, for each individual surety, shall accompany the bond. Such sureties may be required to furnish additional substantiating information concerning their assets and financial capability as PLN may require.

4. Corporations executing the bond shall affix their corporate seals. Individuals shall execute the bond opposite the word "Seal".

5. The name of each person signing this performance bond should be typed in the space provided.

Power of Attorney

FIDELITY AND DEPOSIT COMPANY OF MARYLAND

HOME OFFICE: BALTIMORE, MD.

KNOW ALL MEN BY THESE PRESENTS: That the FIDELITY AND DEPOSIT COMPANY OF MARYLAND, a corporation of the State of Maryland, by JOHN C. GARDNER, Vice-President, and C. M. PECOT, JR., Assistant Secretary, in pursuance of authority granted by Article VI, Section 2, of the By-Laws of said Company, which reads as follows:

"The President, or any one of the Executive Vice-Presidents, or any one of the additional Vice-Presidents specially authorized so to do by the Board of Directors or by the Executive Committee, shall have power, by and with the concurrence of the Secretary or any one of the Assistant Secretaries, to appoint Resident Vice-Presidents, Resident Assistant Secretaries and Attorneys-in-Fact as the business of the Company may require, or to authorize any person or persons to execute on behalf of the Company any bonds, undertakings, recognizances, stipulations, policies, contracts, agreements, deeds, and releases and assignments of judgments, decrees, mortgages and instruments in the nature of mortgages, and also all other instruments and documents which the business of the Company may require, and to affix the seal of the Company thereto."

does hereby nominate, constitute and appoint Richard W. Recob of Portland, Oregon.....

its true and lawful agent and Attorney-in-Fact, to make, execute, seal and deliver, for, and on its behalf as surety, and as its act and deed: any and all bonds and undertakings.....

And the execution of such bonds or undertakings in pursuance of these presents, shall be as binding upon said Company, as fully and amply, to all intents and purposes, as if they had been duly executed and acknowledged by the regularly elected officers of the Company at its office in Baltimore, Md., in their own proper persons. This power of attorney revokes that issued on behalf of Richard W. Recob, dated June 21, 1973.

The said Assistant Secretary does hereby certify that the aforegoing is a true copy of Article VI, Section 2, of the By-Laws of said Company, and is now in force.

IN WITNESS WHEREOF, the said Vice-President and Assistant Secretary have hereunto subscribed their names and affixed the Corporate Seal of the said FIDELITY AND DEPOSIT COMPANY OF MARYLAND, this 25th day of June, A.D. 1973

ATTEST:

(SIGNED) FIDELITY AND DEPOSIT COMPANY OF MARYLAND

C. M. PECOT, JR. By JOHN C. GARDNER

(SEAL) *Assistant Secretary* *Vice-President*

STATE OF MARYLAND
CITY OF BALTIMORE } ss:

On this 25th day of June, A.D. 1973, before the subscriber, a Notary Public of the State of Maryland, in and for the City of Baltimore, duly commissioned and qualified, came the above-named Vice-President and Assistant Secretary of the FIDELITY AND DEPOSIT COMPANY OF MARYLAND, to me personally known to be the individuals and officers described in and who executed the preceding instrument, and they each acknowledged the execution of the same, and being by me duly sworn, severally and each for himself deposeth and saith, that they are the said officers of the Company aforesaid, and that the seal affixed to the preceding instrument is the Corporate Seal of said Company, and that the said Corporate Seal and their signatures as such officers were duly affixed and subscribed to the said instrument by the authority and direction of the said Corporation.

IN TESTIMONY WHEREOF, I have hereunto set my hand and affixed my Official Seal, at the City of Baltimore, the day and year first above written.

(SIGNED)

(SEAL) GLORIA J. COLEMAN

Notary Public Commission Expires July 1, 1974

CERTIFICATE

I, the undersigned, Assistant Secretary of the FIDELITY AND DEPOSIT COMPANY OF MARYLAND, do hereby certify that the original Power of Attorney of which the foregoing is a full, true and correct copy, is in full force and effect on the date of this certificate; and I do further certify that the Vice-President who executed the said Power of Attorney was one of the additional Vice-Presidents specially authorized by the Board of Directors to appoint any Attorney-in-Fact as provided in Article VI, Section 2 of the By-Laws of the FIDELITY AND DEPOSIT COMPANY OF MARYLAND.

This Certificate may be signed by facsimile under and by authority of the following resolution of the Board of Directors of the FIDELITY AND DEPOSIT COMPANY OF MARYLAND at a meeting duly called and held on the 16th day of July, 1969.

RESOLVED: "That the facsimile or mechanically reproduced signature of any Assistant Secretary of the Company, whether made heretofore or hereafter, wherever appearing, upon a certified copy of any power of attorney issued by the Company, shall be valid and binding upon the Company with the same force and effect as though manually affixed."

IN TESTIMONY WHEREOF, I have hereunto subscribed my name and affixed the corporate seal of the said Company, this 21st day of June, 19 74

L1419—Ctf.

Assistant Secretary

BINGHAM - WILLAMETTE COMPANY

RESOLUTION OF AUTHORIZATION

Whereas, BINGHAM - WILLAMETTE COMPANY is a division of Guy F. Atkinson Company, a Nevada corporation, carrying on a general iron and steel fabrication and manufacturing business, including but not limited to machine and plate shop work, the manufacture of pumps, pressure vessels, gates and valves, and generally the design, manufacture and sale of other machinery equipment and devices which may be suitable for manufacture in its facilities:

Now, Therefore, be it

RESOLVED that each of the persons hereinafter named is hereby authorized on behalf of said corporation to do those things which are set forth following their name:

1. G. W. Wintz, Senior Vice President of Guy F. Atkinson Company and President of BINGHAM - WILLAMETTE COMPANY, is authorized to carry on all operations of said COMPANY, to represent it in all conferences, including any conferences with the United States or other governments or their agencies or representatives, to sign proposals, bids, contracts, purchase orders, change orders, bonds, applications for bonds, checks, progress estimates, government vouchers, affidavits, bills of sale, assignments, releases, warranties, letters, protests and appeals and, generally, to take any and all action necessary or convenient to the business of said COMPANY.

2. Wm. E. Tharp, Executive Vice President and General Manager of BINGHAM - WILLAMETTE COMPANY, is hereby authorized, in the absence of the said President, to carry on such business and execute such documents as the President could do if present, and the execution of any documents by the Executive Vice President and General Manager shall be conclusive evidence of the absence of the President.

3. A. R. Sadewic, Manager of Manufacturing of BINGHAM - WILLAMETTE COMPANY, is authorized to sign on behalf of said COMPANY, checks, progress estimates, government vouchers, affidavits, letters, bills of sale, assignments, protests, appeals and, in the absence of the President and Executive Vice President and General Manager, to sign all such proposals, bids, bonds, applications for bonds, contracts, purchase orders, change orders, releases, warranties or other documents and papers that could be signed by said President, and the execution of any documents by the Manager of Manufacturing shall be conclusive evidence of the absence of the President and Executive Vice President and General Manager.

4. W. L. Hallmark, Manager of Industrial Sales and Engineering of BINGHAM - WILLAMETTE COMPANY, is authorized to sign on behalf of said COMPANY, checks, progress estimates, government vouchers, affidavits, letters, bills of sale, assignments, protests, appeals and, in the absence of the President, and Executive Vice President and General Manager, to sign all such proposals, bids, bonds, applications for bonds, contracts, purchase orders, change orders, releases, warranties or other documents and papers that could be signed by said President, and the execution of any documents by the Manager of Industrial Sales and Engineering shall be conclusive evidence of the absence of the President and Executive Vice President and General Manager.

5. F. E. Westermann, Manager of the Valve Department of BINGHAM-WILLAMETTE COMPANY, is authorized to sign on behalf of said COMPANY, checks, progress estimates, government vouchers, affidavits, letters, bills of sale, assignments, protests, appeals and, in the absence of the President and Executive Vice President and General Manager, to sign all such proposals, bids, bonds, applications for bonds, contracts, purchase orders, change orders, releases, warranties or other documents and papers that could be signed by said President, and the execution by any documents by the Manager of the Valve Department shall be conclusive evidence of the absence of the President and Executive Vice President and General Manager.

RESOLVED FURTHER that all such actions heretofore taken in any of said capacities by any of the foregoing authorized representatives on behalf of this corporation are hereby ratified, confirmed and approved.

I, Betty A. Allen, Assistant Secretary of Guy F. Atkinson Company, the corporation above named, do hereby certify that pursuant to the by-laws of said corporation granting to the Executive Committee of its Board of Directors full powers to so act upon all such matters when the Board of Directors is not in session, said Executive Committee unanimously adopted the foregoing resolutions by written consent January 2, 1974, and that said resolutions are in full force and effect.

In Witness Whereof, I have hereunto set my hand and affixed the seal of said corporation this 24th day of June, 1974.

Assistant Secretary

GENERAL CONDITIONS

* GC.1 CONTRACT DOCUMENTS. It is understood and agreed that the Basis of Contract Award, Invitation for Bids, Instructions to Bidders, Proposal, Proposal Data, Contract Agreement, Performance Bond, ~~Payment Bond~~ General Conditions, Specifications, Drawings, Addenda, and Change Orders issued by the Owner or the Engineer, and specifications and engineering data furnished by the Contractor and accepted by the Owner, are each included in this Contract and the work shall be done in accordance therewith.

**

GC.2 DEFINITIONS. Words, phrases, or other expressions used in these contract documents shall have meanings as follows:

1. "Contract" or "contract documents" shall include the items enumerated above under CONTRACT DOCUMENTS.

2. "Owner" or "PLN" shall mean the Perusahaan Umum Listrik Negara, an Agency of the Ministry of Public Works and Power of the Government of the Republic of Indonesia named and designated in the Contract Agreement as "Party of the First Part", acting through its duly authorized agents. All notices, letters, and other communication directed to the Owner shall be addressed and delivered to:

   Director of Construction
   Perusahaan Umum Listrik Negara
   Jalan Sunan Ngampel 1
   Kebajoran Baru
   Jakarta, Indonesia
   Cable address: PLNPST Jakarta Indonesia

3. "Contractor", "Manufacturer", or "Supplier" shall mean the corporation, company, partnership, firm, or individual named and designated in the Contract Agreement as the "Party of the Second Part", who has entered into this Contract for the performance of the work covered thereby, and its, his, or their duly authorized representatives.

4. "Subcontractor" shall mean and refer only to a corporation, partnership, or individual having a direct contract with the Contractor for performing work covered by these contract documents.

5. "Engineer" shall mean the firm of Black & Veatch International, Consulting Engineers, 1500 Meadow Lake Parkway, (mailing address P.O. Box 8405), Kansas City, Missouri 64114, (or P.O. Box 3149 Jakarta, Indonesia) or its duly authorized agents.

* Added for Contract
** Not included in Contract

6. "USA" shall mean the United States of America.

7. "AID" shall mean the United States Government, Department of State, Agency for International Development or any successor agency of the United States Government.

8. "Date of contract", or equivalent words, shall mean the date written in the first paragraph of the Contract Agreement; that is, the date of final signature by PLN.

9. "Contract effective date" shall mean the date when an irrevocable letter of credit is established in a United States of America bank.

10. "Day" or "days", unless herein otherwise expressly defined, shall mean a calendar day or days of 24 hours each.

11. "The work" shall mean the equipment, supplies, materials, labor, and services to be furnished under the contract and the carrying out of all obligations imposed by the contract documents.

12. "Drawings" or "plans" shall mean all (a) drawings furnished by the Owner as a basis for proposals, (b) supplementary drawings furnished by the Owner to clarify and to define in greater detail the intent of the contract drawings and specifications, (c) drawings submitted by the successful bidder with his proposal, provided such drawings are acceptable to the Owner, (d) drawings furnished by the Owner to the Contractor during the progress of the work, and (e) engineering data and drawings submitted by the Contractor during the progress of the work, provided such drawings are acceptable to the Engineer.

13. Whenever in these contract documents the words "as ordered", "as directed", "as required", "as permitted", "as allowed", or words or phrases of like import are used, it shall be understood that the order, direction, requirement, permission, or allowance of the Owner or Engineer is intended only to the extent of judging compliance with the terms of the contract; none of these terms shall imply the Owner or the Engineer has any authority or responsibility for supervision of the Contractor's forces, such supervision and the sole responsibility therefor being strictly reserved for the Contractor.

14. Similarly the words "approved", "reasonable", "suitable", "acceptable", "proper", "satisfactory", or words of like effect and import, unless otherwise particularly specified herein, shall mean approved, reasonable, suitable, acceptable, proper, or satisfactory in the judgment of the Owner or Engineer, to the extent provided in "12" above.

* ~~15. Whenever in these contract documents the phrase "it is [illegible]" or an expression of like import is used, such expression means the natural understanding and intent of the parties executing the Contract Agreement.~~

16. "Startup" shall mean the time period required to bring the steam-electric generating unit from an inactive condition, when construction is essentially complete, to the state ready for commercial operation. The startup period shall include preliminary inspection and check-out of equipment and supporting subsystems; trial operation of supporting equipment and subsystems; initial operation of the complete steam-electric generating unit; operation of the complete unit to obtain data, perform calibration and corrective work; shutdown, inspection and adjustment prior to obtaining commercial operating status.

17. "Initial operation" shall mean the first integral operation of the complete steam-electric generating unit with subsystems and supporting equipment in service or available for service.

18. "Commercial operation" shall mean the condition of operation in which the complete steam-electric generating unit is officially declared by the Owner to be available for continuous operation at variable loads up to and including rated capacity.

19. "Official acceptance" shall mean the Owner's written acceptance of all work performed under this Contract.

GC.3 EXECUTION OF CONTRACT. After appropriate AID approval, copies of the contract documents will be prepared by the Engineer. All copies will be submitted to the Contractor and the Contractor shall execute the Contract Agreement, insert executed copies of the required bonds and power of attorney, and submit all copies to the Owner. The date of contract on the contract forms shall be left blank for filling in by the Owner. The certification date on the power of attorney shall also be left blank for filling in by the Owner.

Copies of engineering data, special forms, or other documents furnished by the Contractor, which are required to be incorporated in the contract shall be supplied to the Engineer.

The Owner will execute all copies, and make distribution of one copy each to the Owner, Engineer, Contractor, and Surety.

*Deleted in accordance with Addendum 1, Item 17

After receipt of the executed contract documents, the Engineer will prepare 17 additional copies of the documents for distribution to the Owner, Engineer, Contractor and AID.

GC.4 LEGAL ADDRESSES. The business address of the Contractor given in the Proposal is hereby designated as the place to which all notices, letters, and other communications to the Contractor may be mailed or delivered. The address of the Owner appearing in Article GC.2 is hereby designated as the place to which all notices, letters, and other communications to the Owner may be mailed or delivered. The delivery by one party to the other party at an address so designated, or the depositing in any mail box regularly maintained by the post office, of any notice, letter, or other communication addressed to such address, postage prepaid, registered or certified mail, with return receipt requested, shall be deemed sufficient service thereof, and the date of said service shall be the date of such delivery or mailing. Either party may change the said address or addresses at any time by an instrument in writing delivered to the Engineer and to the other party. Nothing herein contained shall be deemed to preclude or render inoperative the service of any notice, letter, or communication upon either party personally.

GC.5 SCOPE AND INTENT OF CONTRACT DOCUMENTS. The specifications and drawings are intended to supplement but not necessarily duplicate each other. Any work exhibited in the one and not in the other shall be executed as if it had been set forth in both, so that the work will be constructed according to the complete design as determined by the Engineer.

Should anything necessary for a clear understanding of the work be omitted from the specifications and drawings, or should the requirements appear to be in conflict, the Contractor shall secure written instructions from the Engineer before proceeding with the work affected thereby. It is understood and agreed that the work shall be performed according to the contract documents.

GC.6 INDEPENDENT CONTRACTOR. The relationship of the Contractor to the Owner shall be that of an independent contractor.

* GC.7 ASSIGNMENT. The Contractor shall not assign the work, or any part thereof, without the previous written consent of the Owner, Engineer, and AID, nor shall he assign, by power of attorney or otherwise, any of the money payable under this Contract unless written consent of the Owner has been obtained. No right under this Contract, nor claim for any money due or to become due hereunder shall be asserted against the Owner, or persons acting for the Owner, by reason of any so-called assignment of this Contract or any part thereof, unless such assignment has been authorized by the written consent of the Owner and AID. In case the Contractor is permitted to assign moneys due or to become due under this Contract, the instrument of assignment shall contain a clause subordinating the claim of the assignee to all prior liens for services rendered or materials supplied for the performance of the work.

See Page GC-4A

(PLN - 6104)
(EQUIPMENT & MATERIALS)
061573

*Revised in accordance with Addendum 1, Item 18

* GC.7 ASSIGNMENT AND SUBCONTRACTING. The Contractor shall not assign or subcontract the work, or any part thereof, without the previous written consent of the Owner, Engineer, and AID, nor shall he assign, by power of attorney or otherwise, any of the money payable under this Contract unless written consent of the Owner has been obtained. No right under this Contract, nor claim for any money due or to become due hereunder shall be asserted against the Owner, or persons acting for the Owner, by reason of any so-called assignment of this Contract or any part thereof, unless such assignment has been authorized by the written consent of the Owner and AID. In case the Contractor is permitted to assign moneys due or to become due under this Contract, the instrument of assignment shall contain a caluse subordinating the claim of the assignee to all prior liens for services rendered or materials supplied for the performance of the work.

Should any subcontractor fail to perform in a satisfactory manner the work undertaken by him, his subcontract shall be immediately terminated by the Contractor upon notice from the Owner. The Contractor shall be as fully responsible and accountable to the Owner for the acts and omissions of his subcontractors, and of persons either directly or indirectly employed by them, as he is for the acts and omissions of persons directly employed by him. Nothing contained in this Contract shall create any contractural relation between any subcontractor and the Owner.

*Revised in accordance with Addendum 1, Item 18

See Page GC-5A

* ~~GC/8 ORAL STATEMENTS/ IF IS PROPERTERPOP AND AGREED THAT THE WRITTEN TERMS AND PROVISIONS OF THIS AGREEMENT SHALL SUPERSEDE ALL OTHA STATEMENTS OF REPRESENTATIONS OF THE OWNER AND OTHA STATEMENTS SHALL NOT BE REFERRABLE OF WE CONSIDERED AS BEING/A/PART OF THIS CONTRACT.~~

GC.9 REFERENCE STANDARDS. Reference to the standards of any technical society, organization, or association, or to codes of local or state authorities, shall mean the latest standard, code, specification, or tentative standard adopted and published at the date of taking bids, unless specifically stated otherwise.

GC.10 NO WAIVER OF RIGHTS. Neither the inspection by the Owner or Engineer or any of their officials, employees, or agents, nor any order by the Owner or Engineer for payment of money, or any payment for, or acceptance of, the whole or any part of the work by the Owner or Engineer, nor any extension of time, nor any possession taken by the Owner or its employees shall operate as a waiver of any provision of this Contract, or of any power herein reserved to the Owner, or any right to damages herein provided, nor shall any waiver of any breach in this Contract be held to be a waiver of any other or subsequent breach.

GC.11 AUTHORITY OF THE ENGINEER. To prevent delays and disputes, and to discourage litigation, it is agreed by the parties to this Contract that the Engineer shall determine all questions in relation to the work.

Duties of the Engineer with respect to the work performed under this Contract include, but are not necessarily limited to, the following: interpretation of the specifications and documents; review of engineering data submitted by the Contractor; witnessing tests of equipment and material prior to shipment as required; certification of the delivery of equipment and materials to the plant site; inspection and acceptance or rejection of equipment and materials delivered to the plant site; inspection and acceptance or rejection of equipment and materials during and upon completion of construction at the plant site; assisting the Owner in preparation and issuance of change orders; review of acceptance test procedures, schedules, and results; and final inspection of the completely installed equipment and materials.

If in the opinion of the Contractor a decision made by the Engineer is not in accordance with the meaning and intent of the contract, the Contractor may file with the Engineer, within 30 days after receipt of the decision, a written objection to the decision. Failure to file an objection within the allotted time will be considered acceptance of the Engineer's decision and the decision shall become final and conclusive.

The Engineer's decision and the filing of the written objection thereto shall be a condition precedent to the right to request arbitration or to start action in court.

*Revised in accordance with Addendum 1, Item 19

* ~~It is the intent of this agreement that there shall be no delay in the performance of the work and the acceptance of the Engineer is rendered shall be reasonable~~

GC.12 ENGINEERING INSPECTION. The Owner may appoint such inspectors as the Owner deems proper to inspect the materials furnished and the work performed for compliance with the drawings and specifications. The Contractor shall furnish all reasonable assistance required by the Engineer, or inspectors, for the proper inspection of the work.

The Contractor shall obey the directions and instructions of the Engineer or inspector when they are consistent with the obligations of this Contract. Should the Contractor object to any order given by any inspector, the Contractor may make written appeal to the Engineer for a decision.

Inspectors and other authorized perform representatives of the Owner or Engineer
** shall be free at all times to ~~perform~~ their duties. Any attempted interference of one of them by the Contractor or his employees shall be sufficient reason, if the Owner so decides, to terminate the contract.

Inspection of the work by the Engineer, or inspectors, will be performed at the factory of the manufacturer prior to shipment of the equipment and materials and at the Owner's plant site following delivery thereto. Procedures whereby the Contractor shall notify the Engineer a reasonable time in advance that the work or any part thereof is ready for inspection shall be established by agreement between the Engineer and the Contractor.

Inspection shall not relieve the Contractor from any obligation to perform the work strictly in accordance with the drawings and specifications. Work not so performed shall be removed and replaced by the Contractor at his own expense.

GC.13 RIGHT OF OWNER TO TERMINATE CONTRACT FOR CAUSE. If the work to be done under this Contract is abandoned by the Contractor; or if this Contract is assigned by him without the written consent of the Owner; or if the Contractor is adjudged bankrupt; or if a general assignment of his assets is made for the benefit of his creditors; or if a receiver is appointed for the Contractor or any of his property; or if at any time the ~~Engineer certifies~~
*** ~~in writing to the Owner that the performance of~~ the work under this Contract is being unnecessarily delayed, that the Contractor is violating any of the conditions of this Contract, or that he is executing the same in bad faith or otherwise not in accordance with the terms of said contract; or if the work is not substantially completed within the time named for its completion or within the time to which such completion date may be extended; then the Owner may serve written notice upon the Contractor and his surety of the Owner's intention to terminate this Contract. Unless within 30 days after the serving of such notice, a satisfactory arrangement is made for continuance, this Contract shall terminate. In the event of such termination, the surety shall have the right to take over and complete the work, provided

*Deleted in accordance with Addendum 1, Item 20
**Revised in accordance with Addendum 1, Item 21
***Revised in accordance with Addendum 1, Item 22

* GC.8 ORAL AND WRITTEN STATEMENTS. It is understood and agreed that the written terms and provisions of this Contract shall supersede all oral and written statements made by either party to this Contract prior to entering into contract. Written statements made by either party prior to entering into contract and oral statements shall not be effective or be construed as being a part of this Contract.

*Revised in accordance with Addendum 1, Item 19

that if the surety does not commence performance within 60 days, the Owner may take over and prosecute the work to completion, by contract or otherwise. The Contractor and his surety shall be liable to the Owner for all excess cost sustained by the Owner by reason of such prosecution and completion.

GC.14 HINDRANCES AND DELAYS. The Contractor expressly agrees that the period of time named in the Contract Agreement to complete all work includes allowance for all hindrances and delays incident to the work. No claim shall be made by the Contractor for hindrances or delays from any cause during the progress of the work, except as provided under SUSPENSION OF WORK and FORCE MAJEURE.

GC.15 SUSPENSION OF WORK. The Owner reserves the right to suspend and reinstate execution of the whole or any part of the work without invalidating the provisions of the contract. Orders for suspension or reinstatement of work will be issued by the Owner to the Contractor in writing. The time for completion of the work will be extended for a period equal to the time lost by reason of the suspension.

Changes in Contractor's price or delivery schedules which occur during a period of suspension ordered by the Owner shall not affect this Contract except as agreed by the Owner and the Contractor. If the Contractor proposes to apply such changes to this Contract, he shall present his proposal to the Owner in writing. During the 60 day period from and after the receipt by the Owner of such written proposal, the Owner shall be permitted to reinstate the work without change. If the work is not reinstated during this 60 day period, the Owner and the Contractor shall agree upon reasonable and proper changes or the Owner may cancel the unshipped portion of the work.

Changes in delivery schedule shall mean extension of the scheduled time of delivery beyond the number of days of the suspension period.

Any necessary and demonstrable costs incurred by the Contractor as a result of suspension of work will be paid by the Owner, provided such costs are substantiated to the satisfaction of the Owner.

*GC.16 FORCE MAJEURE. Should the Contractor be delayed in the final completion of the work by any cause or causes outside of and beyond the control of the Contractor, such as but not limited to acts of a public enemy, war, blockades, insurrections, riots, epidemics, civil disturbances, strikes, fire, and other causes not within the control of the Contractor, which makes the performance of the contract infeasible and which by the exercise of due diligence the Contractor in performance of the contract is unable to overcome, then an extension of time sufficient to compensate for the delay, as determined by the Engineer, shall be granted by the Owner, and the Contractor shall not be charged for liquidated damages for such delay; provided, however, that the Contractor shall give the Owner and the Engineer prompt notice in writing of the cause of delay in each case and shall demonstrate that he has used all reasonable means to minimize the delay.

See Page GC-7A

*Revised in accordance with Addendum 1, Item 23

*In any such delay, except failure to reach agreement as set forth herein, lasts for more than 60 days, the parties shall immediately consult with one another for the purpose of agreeing upon the basis on which the Contractor shall resume work at the end of the delay. If they do not agree upon a solution of the problems involved, including adjustment of the price, within 90 days from the beginning of such delay, then either party may, by written notice, cancel that portion of the work which is delayed and in such event the Owner shall pay to the Contractor reasonable and proper cancellation charges as mutually agreed.

GC.17 DELAYED SHIPMENT. The Owner reserves the right to order (by written notice) the Contractor to delay shipment of equipment and materials herein contracted. In the event such a delay is ordered by the Owner the Owner will pay the Contractor reasonable and proper extra charges incurred by the Contractor as a result of the delay. Such extra charges shall include **storage charges, handling charges, insurance, ~~interest on investment~~, transportation charges to the storage facility, and preservation during storage. In the event storage is necessary, the Contractor shall be guided by the Owner's instructions in respect to the removal from storage and the arrangements for export shipment in accordance with the terms of the Contract.

GC.18 TERMINATION FOR THE CONVENIENCE OF THE OWNER. The Owner reserves the right to terminate and cancel this Contract in whole or in part at any time by written notice to the Contractor. In the event of such termination, the Contractor agrees to waive any claims for damages including loss of anticipated profits on account thereof. The Owner will pay to the Contractor reasonable and proper cancellation charges which are demonstrable to the satisfaction of the Owner. In the event of such termination, provisions of these contract documents relating to specific warranties and guarantees and to agreements to hold harmless or indemnify the other party to the Contract shall remain in full force and effect to the extent provided therein.

Upon receipt of notice of termination, the Contractor shall discontinue the work on the date and to the extent specified in the notice, make every reasonable effort to procure cancellation of all orders and subcontracts to the extent of their relationship to the work terminated and upon terms satisfactory to the Owner; halt all further purchasing or subcontracting activity applicable to the work terminated; and assist the Owner in maintenance, protection, and disposition of work already acquired by the Owner under this Contract.

GC.19 MODIFICATIONS. The Contractor shall modify the work whenever so ordered by the Owner and such modifications shall not affect the validity of the contract. Modifications may involve increases or decreases in the amount of the work for which appropriate contract price adjustment will be made.

*Revised in accordance with Addendum 1, Item 23
**Revised in accordance with Addendum 1, Item 24

* GC.16 FORCE MAJEURE. The term force majeure, as used in these contract documents shall mean any cause beyond the control of the Contractor, and which the Contractor could not foresee and/or reasonably provide against and which prevents the Contractor from wholly or partly performing any duties under the contract.

Force majeure shall include, but is not limited to, any of the following:

a. War, revolution, insurrection or hostilities (whether declared or not)

b. Riot, civil commotion or civil uprising (other than among the Contractor's employees)

c. Earthquake, flood, tempest, hurricane, lightning or other natural disaster

d. Any fire of major proportions, or explosion

e. Epidemic

f. Strike, lockout or other industrial disturbance

If there occurs an event constituting force majeure, the Contractor shall give written notice of the occurrence to the Owner within 15 days of the occurrence or as soon thereafter as is practicable, including a statement describing the effect of such occurrence upon the performance of this agreement.

In the event of a force majeure, the Contractor unless otherwise directed by the Owner in writing shall continue to undertake and perform the duties included in this Contract as far as is reasonably practicable. If prevented from so performing by such cause, the performance may be suspended during the continuance of such inability but for no longer period and such inability shall be removed if practicable with all reasonable dispatch.

In the event of a force majeure resulting in a suspension of work this Contract shall be extended by a period equal to that for which the Contractor was prevented from performing.

If such event lasts for more than 45 days after notice has been given to the Owner in writing, either party to this Contract may terminate this Contract and the Contractor shall thereupon be entitled to any sums which would be payable pursuant to the termination provision of this Contract.

*Revised in accordance with Addendum 1, Item 23

All modifications shall be made under the authority of duly executed change orders issued and signed by the Owner, approved by AID, and accepted and signed by the Contractor.

If modifications affect the delivery and completion schedule of the work, appropriate adjustments to the schedules will be made as provided for in the article FORCE MAJEURE and this article in these GENERAL CONDITIONS.

GC.19.1 Extra Work. Modifications which increase the amount of the work shall be paid for according to the amount actually done.

Claims for extra work will not be paid unless the work covered by such
* claims was authorized in writing by the Owner ~~or~~ Engineer. The Contractor and
* shall not have the right to prosecute or maintain ~~either~~ an arbitration
* proceeding or ~~bring action~~ to recover for extra work unless the claim
* is based upon a written order from the Owner ~~or~~ Engineer. Payments for and
extra work will be based on lump sums plus a percentage allowance as agreed
* to by the Owner ~~or~~ Engineer and the Contractor before the extra work is
and started. The percentage allowance shall include the Contractor's extra
profit and extra overhead and, unless otherwise agreed by the Contractor
* and the Owner ~~or~~ Engineer, the percentage allowance shall be 15 per cent
of the total direct cost. and

For the purpose of determining whether proposed extra work will be authorized, the Contractor shall submit to the Engineer, for approval, a detailed fixed cost proposal for proposed extra work. The proposal shall show itemized quantities and charges for all elements of direct cost and a percentage allowance to cover extra profit and extra overhead. Unless otherwise agreed
* upon by the Contractor and the Owner ~~or~~ Engineer, the percentage allowance shall be 15 per cent of the total direct cost. and

GC.19.2 Decreased Work. If a modification decreases the amount of work to be done, such decrease shall not constitute the basis for a claim for damages or anticipated profits on work affected by such decrease. The Engineer shall determine on an equitable basis the amount of (a) credit due the Owner for contract work not done as a result of an authorized change, (b) allowance to the Contractor for any actual loss incurred in connection with the purchase, delivery, and subsequent disposal of materials or equipment required for use on the work as planned and which could not be used in any part of the work as actually built, and (c) any other adjustment of the contract amount where the method to be used in making such adjustment is not clearly defined in the contract documents.

GC.20 ARBITRATION. Except as may otherwise be provided in this Contract, any dispute or difference arising under this Contract which cannot be settled by agreement between the parties to the dispute shall be submitted to arbitration in the manner specified herein.

*Revised in accordance with Addendum 1, Item 25

Within 30 days from the date of failure to reach agreement as established by written notice by either party to the dispute to the other, each party to the dispute shall appoint an arbitrator. If the two arbitrators thus appointed fail to agree upon a decision and award within 30 days of the date of appointment of the second arbitrator, they shall select a third arbitrator by agreement. If either party to the dispute fails to appoint an arbitrator within the allotted time, or if the two arbitrators cannot agree upon a third arbitrator within 10 days, then the parties to the dispute, or either of them, shall apply to the Court of Arbitration of the International Chamber of Commerce, 38 Cour Albert Ier, Paris VIII for the appointments which have not been made as stated.

The arbitration proceedings shall be conducted in accordance with the Rules of Conciliation and Arbitration of the International Chamber of Commerce. The decision shall be by majority vote of the arbitrators and shall be final, conclusive, and binding upon the parties thereto. Each party shall bear the cost of its appointed arbitrator. The cost of the third arbitrator if one be appointed, shall be borne by the parties as the arbitrators may determine.

All arbitration proceedings shall be conducted in a location acceptable to both parties to the dispute.

Decision of the arbitrators shall be final and binding on the parties and an action to enforce the decision of the arbitrators may be instituted in any court of competent jurisdiction.

The Contractor shall not cause a delay of the work during any arbitration proceedings, except by agreement with the Owner. It is understood and agreed by the parties to the contract that no requirement or statement herein shall be interpreted as curtailing the power of the Engineer to determine the amount, quality, and acceptability of work and materials.

GC.21 LAWS AND REGULATIONS.

GC.21.1 Non-Indonesian Laws and Regulations. The Contractor shall observe and comply with all applicable ordinances, laws, and regulations in the locality where equipment may be manufactured. The Contractor shall protect and indemnify the Owner and the Owner's officers and agents against any claim or liability arising from or based on violation of such ordinances, regulations, or laws.

GC.21.2 Indonesian Laws and Regulations. If Contractor's personnel are required in Indonesia, the following stipulations shall apply.

The Contractor shall observe, comply with and respect Indonesian laws, rules and regulations and shall not interfere with Indonesian political or religious affairs either directly or indirectly. The Contractor shall comply with such other rules and regulations as the Owner and Engineer may establish from time to time with respect to the construction work and personnel employed by the Contractor.

The Contractor shall, in all dealings with labor in his employ, have due regard to all recognized festival days of rest and religious or other customs.

The Contractor shall not give or barter, or otherwise dispose of, to any person or persons, any arms or ammunition of any kind, or permit or suffer the same as aforesaid.

In the event of any outbreak of illness of an epidemic nature, the Contractor shall comply with and carry out such regulations, orders and requirements as may be made by the Government of Indonesia or the local medical or sanitary authorities, for the purpose of dealing with and overcoming the same.

GC.22 TAXES, PERMITS AND LICENSES.

GC.22.1 Non-Indonesian Taxes, Permits, and Licenses. The Contractor shall pay all sales, use, income and other taxes and duties, tariffs, and imports lawfully assessed against the Owner or the Contractor (excluding the Republic of Indonesia or any political subdivision thereof) in connection with the work included in this Contract. The Contractor shall obtain and pay for all USA or other non-Indonesian licenses, permits, and inspections required for the work including the cost of securing all export licenses and permits for materials, equipment, supplies and personnel exported from the USA or other country to Indonesia.

GC.22.2 Indonesian Taxes, Permits, and Licenses. The Contractor will be exempt from any import duties and charges levied by Indonesian law on the equipment and materials by virtue of the Owner's relevant exemption privileges. The exemption shall also include stamp duties imposed on the Contract. Any Indonesian taxes which the Contractor pays in order to perform the work under this Contract will be for the account of the Owner; however the Contractor shall not pay such taxes without the prior written approval of the Owner.

The Contractor and his non-Indonesian field personnel will be exempt from the payment of Indonesian income taxes on payments received under this Contract and from custom duties, harbor dues and other charges for importation of personal effects.

instruments, tools, machinery, and vehicles required for the performance of the work in Indonesia and imported on the condition that they will be exported at the completion of the work will be exempted from customs duties and other such charges.

GC.23 PATENTS. Royalties and fees for patents covering materials, articles, apparatus, devices, equipment, or processes used in the work, shall be included in the contract amount. The Contractor shall satisfy all demands that may be made at any time for such royalties or fees and he shall be liable for any damages or claims for patent infringements. The Contractor shall, at his own cost and expense, defend all suits or proceedings that may be instituted against the Owner for alleged infringement of any patents involved in the work and, in case of an award of damages, the Contractor shall pay such award. Final payment to the Contractor by the Owner will not be made while any such suit or claim remains unsettled. ~~The Contractor's liability for patent infringement is limited to patents held in the country in which the equipment is manufactured.~~ *

In the event any apparatus or equipment, or any part thereof furnished by the Contractor, is in such suit or proceedings held to constitute infringement, and its use is enjoined, the Contractor shall, at his option, and at his own expense, either: procure for the Owner the right to continue use of said apparatus, equipment, or part thereof; replace it with noninfringing apparatus or equipment; or modify it so it becomes noninfringing.

GC.24 MATERIALS AND EQUIPMENT. Unless specifically provided otherwise in each case, all materials and equipment furnished for permanent installation in the work shall conform to applicable standard specifications and shall be new, unused, and undamaged when installed or otherwise incorporated in the work. No such material or equipment shall be used by the Contractor for any purpose other than that intended or specified, unless such use is specifically authorized by the Owner in each case.

GC.24.1 Equivalent Materials and Equipment. Whenever a material or article is specified or described by using the name of a proprietary product or the name of a particular manufacturer or vendor, the specific item mentioned shall be understood as establishing the type, function, and quality desired. Other manufacturers' products will be considered provided sufficient information is submitted to allow the Engineer to determine that the products proposed are equivalent to those named.

GC.25 GUARANTEE. The Contractor guarantees that the work herein contracted will be as specified and will be free from defects in design, workmanship, and materials. If within the guarantee period the work fails to meet the

*Revised in accordance with Addendum 1, Item 26

provisions of this guarantee, the Contractor shall promptly correct any defects, including nonconformance with the specifications, by adjustment, repair, or replacement of all defective parts or materials. * Labor costs involved in carrying out such work shall be borne by the Contractor. The guarantee period shall begin on the date of official acceptance, and shall end 12 months later.

If manufacturer's field representatives are included in the Contract, such supervision shall be furnished by the Contractor without cost for the correction of any defects.

The cost of all materials, parts, labor, transportation, supervision, special tools, and supplies required for replacement or repair of parts and for correction of defects shall be paid by the Contractor or by the surety.

This guarantee shall be extended to cover all repairs and replacements furnished under the guarantee and the period of the guarantee for each such r pair or replacement shall be one year from the date of installation thereof.

If within 20 days after the Owner gives the Contractor notice of a defect, the Contractor neglects to make or undertake with due diligence to make the necessary corrections, the Owner is hereby authorized to make the corrections himself or order the work to be done by a third party, and the cost of the corrections shall be paid by the Contractor. The Owner will be permitted to make repairs or replacements on equipment without affecting the guarantee or without prior notice to the Contractor so long as the repairs or replacements involve the correct installation of replacement parts. The Owner shall also be permitted to adjust or test equipment as outlined in instruction manuals provided by the Contractor or as directed by the Contractor's erection or operating superintendent.

In the event of an emergency where, in the judgment of the Owner, delay would cause serious loss or damage, repairs or adjustments may be made by the Owner or a third party chosen by the Owner without advance notice to

*Revised in accordance with Addendum 1, Item 27

the Contractor and the cost of the work shall be paid by the Contractor, or by the surety. In the event such action is taken by the Owner, the Contractor will be notified promptly and shall assist wherever possible in making the necessary corrections.

GC.26 INSURANCE. The Contractor shall secure and maintain insurance of such types and in such amounts as may be necessary to protect himself and the interests of the Owner against all hazards or risks of loss as hereinafter specified. The form and limits of such insurance, together with the underwriter thereof in each case, shall be acceptable to the Owner but regardless of such acceptance it shall be the responsibility of the Contractor to maintain adequate insurance coverage at all times. Failure of the Contractor to maintain adequate coverage shall not relieve him of any contractual responsibility or obligation.

In the event of loss or damage to equipment and materials furnished under this Contract, the Contractor shall file all damage claims and shall be responsible for the replacement or repair of the work insured hereunder. Passage of title shall not relieve the Contractor of responsibility for loss or damage to the work.

The Contractor shall file with the Owner satisfactory certificates, or copies, of the policies providing the specified insurance. Certificates of insurance covering physical loss or damage to equipment and materials shall be submitted at least 60 days before the first shipment of the equipment and materials. A certificate for each of the other insurance policies shall be submitted at least 60 days prior to the arrival of the Contractor's personnel in Indonesia. Each certificate shall state that the Owner will be given 60 days written notice before the change, cancellation, or expiration of the included policies.

The workmen's compensation, automobile liability, and general liability insurance specified shall apply only to field services such as manufacturer's technical direction, field testing, and similar work not included as part of the normal manufacturing process.

GC.26.1 Workmen's Compensation and Employer's Liability. This insurance shall protect the Contractor against all claims under applicable workmen's compensation laws. The Contractor shall also be protected against claims for injury, disease, or death of employees which, for any reason, may not fall within the provisions of a workmen's compensation law. The policy covering workmen within the USA shall include an "all states" endorsement.

The liability limits shall not be less than the following:

Workmen's Compensation

Employees within the USA	Statutory
Personnel outside the USA who are US citizens, residents of the USA, or hired in the USA	Payments comparable to those provided by the Longshoremen's and Harbor Worker's Act (33 USC 901 et seq)
Other employees	Payments meeting at least the minimum legal requirements applicable by reason of the point of hiring and the site of the work
Employer's Liability (for all employees)	$100,000 each person

GC.26.2 Comprehensive Automobile Liability. This insurance shall be written in comprehensive form and shall protect the Contractor against all claims for injuries to members of the public and damage to property of others arising from the use of motor vehicles, and shall cover operation on or off the site of all motor vehicles licensed for highway use, whether they are owned, nonowned, or hired.

The liability limits per vehicle shall not be less than:

Bodily injury	$50,000 each person $100,000 each occurrence
Property damage	$100,000 each occurrence

GC.26.3 Comprehensive General Liability. This insurance shall be written in comprehensive form and shall protect the Contractor against all claims arising from injuries to members of the public or damage to property of others arising out of any act or omission of the Contractor or his agents, employees, or subcontractors or from strikes, riots, and civil commotions. In addition, this policy shall specifically insure the contractual liability assumed by the Contractor under the article entitled DEFENSE OF SUITS. The Contractor shall notify the Owner of any contractual liability assumed hereunder that is not insurable.

The policy shall insure all of the hazards incident to the work including, but not limited to, the hazards enumerated below whenever such hazards are involved in the Contractor's work:

(1) Premises - Operations

(2) Elevators and hoists

(3) Independent contractors (Contractor's protective liability insurance for protection against suits arising out of negligence of subcontractors.)

(4) Products including completed operations to be in force for one year after official acceptance of the work.

(5) Contractual liability

To the extent that any contractor's work calls for blasting, explosive or underground work, his comprehensive general liability insurance shall be written to eliminate explosion, collapse, and underground damage (XCU) exclusions.

The liability limits shall not be less than:

Bodily injury	$250,000 each person $500,000 each occurrence
Property damage	$500,000 each occurrence $500,000 aggregate

GC.26.4 Installation Floater. This insurance shall protect the Contractor, the Owner, and the Engineer from all insurable risks of physical loss or damage to materials and equipment while the materials and equipment are in transit from the Contractor's factory to the USA port of shipment; during storage and loading for ocean shipment; during unloading and storage at the receiving port; during loading and transit from the receiving port to the construction site; and until the equipment and materials are unloaded at the plant site, inspected, and received into custody of the Owner or his designated installation contractor or until 60 days from unloading at the port of Semarang, whichever shall first occur. It shall be of the "all risks" type, with coverages designed for the circumstances which may occur in the particular work included in this Contract. The coverage shall be for an amount not less than the insurable value of the equipment and materials CI&F at the site.

Installation floater insurance shall provide for losses to be payable to the Contractor, the Owner, and the Engineer as their interests may appear and shall contain a waiver of subrogation rights against the insured parties.

Installation floater insurance shall be coordinated with the ocean cargo insurance specified hereinafter to provide complete coverage of equipment and materials at all times until termination of the coverage as specified above.

Certificates of insurance covering installation floater insurance shall quote the insuring agreement and all exclusions as they appear in the policy; or in lieu of certificates, copies of the complete policy may be submitted.

GC.26.5 Ocean Cargo Insurance. This insurance shall insure and protect the insurable interests of the Contractor and the Owner against all insurable risks of physical loss or damage to equipment and materials while aboard an ocean going vessel in transit to the Owner. This insurance shall be written for all risks including but not limited to war, riot, strike, and civil commotion. Coverage shall be for an amount not less than the cost, insurance, and freight (CI&F) value of the equipment and materials.

In the event the Contractor elects, or is directed by the Owner, to ship equipment and materials by aircraft, insurance providing coverage equivalent to that specified above for ocean cargo shall be provided.

GC.26.6 Other Insurance. The Contractor shall secure and maintain such other insurance coverage as may be required to protect against perils and legal liabilities not covered under the foregoing coverages.

GC.27 TRANSFER OF TITLE. The title of ownership for equipment and material furnished fob port of shipment under this Contract shall be passed to the Owner at the time the equipment and material are actually loaded free on board cargo vessels at the port of shipment. This transfer of title shall not be construed to mean an acceptance of the equipment and materials; the Contractor shall continue to be responsible for the quality and performance of such equipment and materials, and for their compliance with the specifications, until final acceptance of the work and the fulfillment of the guarantee provisions of this Contract.

Transfer of title shall not relieve the Contractor from responsibility for all risk of loss or damage to the equipment and materials as specified under the article INSURANCE in these GENERAL CONDITIONS.

GC.28 DEFENSE OF SUITS. In case any action in court is brought against the Owner or Engineer, or any officer or agent of either of them, for the failure, omission, or neglect of the Contractor to perform any of the covenants, acts, matters, or things by this Contract undertaken; or for injury or damage caused by the alleged negligence of the Contractor or his subcontractors or his or their agents, or in connection with any claim based on lawful demands of subcontractors, workmen, material men, or suppliers; the Contractor shall indemnify and save harmless the Owner and the Engineer and their officers and agents, from all losses, damages, costs, expenses, judgments, or decrees arising out of such action.

GC.29 RELEASE OF LIABILITY. Acceptance by the Contractor of the last payment shall be a release to the Owner and every officer and agent thereof, from all claims and liability hereunder for anything done or furnished for, or relating to the work, or for any act or neglect of the Owner or of any person relating to or affecting the work.

The last payment by the Owner to the Contractor shall constitute final acceptance of all work performed under this Contract and shall be a release to the Contractor and his surety from all contractual liabilities and responsibilities to the Owner except those liabilities and responsibilities assumed under the article entitled GUARANTEE in these GENERAL CONDITIONS.

GC.30 CLAIMS FOR LABOR AND MATERIALS. The Contractor shall indemnify and save harmless the Owner from all claims for labor and materials furnished under this Contract. When requested by the Owner, the Contractor shall submit satisfactory evidence that all persons, firms, or corporations who have done work or furnished materials under this Contract, for which the Owner may become legally liable, have been fully paid or satisfactorily secured. In case such evidence is not furnished or is not satisfactory, an amount will be retained from money due the Contractor which in addition to any other sums that may be retained will be sufficient, in the opinion of the Owner, to liquidate all such claims. Such sum will be retained until the claims as aforesaid are fully settled or satisfactorily secured.

GC.31 CONTRACTOR'S PRICE BREAKDOWN. The Contractor shall prepare and submit to the Engineer for approval a breakdown of the contract price according to the system of accounts provided by the Owner. The Contractor's price breakdown shall be submitted to and approved by the Engineer before any payments are made under this Contract. Each invoice submitted for payment shall be prepared in accordance with the price breakdown approved by the Engineer.

The sum of the items listed in the Contractor's price breakdown shall equal the contract lump sum price or prices. Overhead and profit shall not be listed as separate items.

An unbalanced breakdown estimate providing for overpayment of the Contractor on items of work which would be performed first will not be accepted.

GC.32 PAYMENTS. Payment for the work included in this Contract will be made in accordance with the requirements stated herein and the payment rules in Section 6.3 of AID Capital Projects Guidelines "Borrower Procurement of Equipment and Materials" M.O. 1442.3.

GC.32.1 Dollar Payments. The Owner will establish, in favor of the Contractor, an irrevocable Letter of Credit in a USA bank covering the total dollar price of the equipment and materials plus export shipping expenses plus the dollar portion of the services provided by the Contractor in Indonesia if such services are required by this Contract.

In accordance with AID regulations, the Contractor may designate the USA bank to issue the Letter of Credit in his favor, provided that this designation is made prior to approval of the Contract by AID and provided that the contract amount is $25,000 or more. If the Contractor designates a bank other than the bank which the Owner has selected to receive the AID Letter of Commitment, the Contractor shall pay the additional bank charges incurred.

GC.32.1.1 Dollar Payments for Equipment, Materials, Freight, and Insurance. All requests for dollar payment for equipment, materials, freight and insurance, excepting final payment, shall be submitted to the bank holding the Letter of Credit and shall include the following documentation:

a. Completed General Accounting Office Standard Form 1034, "Public Voucher for Purchase and Services Other Than Personal".

b. The Contractor's commercial invoice. Each invoice shall be marked "paid" by the Contractor except for equipment and materials of USA source and origin in which case the bank will certify by endorsement on or attached to the invoice that payment has been made.

c. AID Form 1440-3, Contractor's Certificate and Agreement with the Agency for International Development, Contractor's Invoice and Contract Abstract, executed in accordance with the instructions thereon. The insurer or carrier is not required to execute a copy of this form.

d. The following certification, signed and dated by the Contractor:

> The undersigned certifies that (1) the sales value of the equipment covered by this invoice; plus the value of equipment already delivered; plus the sales value of engineering services, labor, and purchased material for which expenditures have been made; plus the amount expended on account of commitments for equipment remaining to be supplied under the subject contract, are not less than the total payment already received or claimed against this Contract, including payments claimed under this invoice; and (2) it is complying with the terms and conditions of the subject contract.

e. Shipping documentation consisting of:

> Bill of lading or substitute commercially acceptable document such as copy of ocean or charter party bill of lading, arriving bill, or parcel post receipt. The bill of lading must indicate the carrier's statement of charges.
>
> If shipment is from free port or bonded warehouse in Indonesia, a copy of the bill of lading covering shipment from the source to the free port or bonded warehouse and a delivery receipt evidencing release from the free port or bonded warehouse shall be submitted. The date of the delivery receipt will be considered as the shipment date.
>
> If the equipment and materials are procured from sources within AID Geographic Code 941, excluding the USA, and shipment is made on a liner vessel bearing the flag of a country within AID Geographic Code 941, excluding the USA, the bill of lading submitted must contain a certification signed by the carrier that a copy of the carriers applicable freight rate tariff has been filed with the Resources Transportation Division, AID.

*

The number of copies required of the above documentation will be determined later. The AID Loan Number 497-H-024 shall appear on all documents.

* f. Added for contract, see Page GC.20A.

f. Progress payments submitted prior to fas delivery shall include certification, signed and dated by the Contractor, that the engineering/manufacturing progress to that date is in accordance with the Contractor's engineering/manufacturing schedule as previously submitted to and accepted by the Engineer. The certification document must be accompanied by a copy of a certificate from the Engineer to the Owner attesting that such progress has been made.

* Added for Contract

GC.32.1.2 Dollar Payments for Field Services. All requests for payment of the dollar portion of the Contractor's field services in Indonesia shall be submitted to the bank holding the Letter of Credit and shall include the following documentation:

a. Contractor's invoice describing the services performed, identifying the covering contract and the sections thereof which provide for such payment and the terms of payment. The invoice must be accompanied by written approval of the Engineer and Owner consenting to the payment of the invoice.

b. The following certification attached to, or endorsed on, the Contractor's invoice:

> "The undersigned certifies that the costs reimbursable to the Contractor and the amount payable to the Contractor in accordance with the terms of the contract, up to the date of this certificate, are not less than the total payments received or claimed by the Contractor under the contract (including the payment claimed under this invoice), and that the Contractor has fully complied with the terms and conditions of the contract, including the plans and specifications."

c. AID Form 1440-3, Contractor's Certificate and Agreement with the Agency for International Development, Contractor's Invoice and Contract Abstract, executed in accordance with the instructions thereon.

The number of copies required of the above documentation will be determined later. The AID Loan Number 497-H-024 shall appear on all documents.

GC.32.2 Rupiah Payments. If payments in rupiahs for a portion of the work is included in this Contract, requests for payments under the rupiah portion of this Contract shall include the following documentation:

a. The Contractor's invoice. The invoice shall show the value of the rupiah portion of the work. The Contractor shall submit an invoice showing the rupiah cost for administrative expenses.

* b. The following certification, signed and dated by the Contractor:

> I (we) hereby certify that the equipment and materials invoiced herein or covered by the attached invoice were mined, grown, or produced in _____(eligible source country) and that any produced equipment and materials were manufactured, processed, or assembled into

*Added for Contract

equipment and materials substantially different in basic characteristics or in purpose or utility from any imported components.

I (we) further certify that to the best of my (our) information and belief none of such equipment and materials contain components imported from other than free world (A.I.D. Geographic Code 935) countries.

The number of copies required of the above documentation will be determined later. The AID Loan Number 497-H-024 shall appear on all documents.

GC.32.3 Local Currency Needs. It is a requirement of AID that all local rupiah costs of the contract be paid in Indonesian Rupiahs. Dollar payments will not be made from the AID loan for that portion of the contract. ~~Except~~
* ~~as provided for under the AID Capital Projects Guarantees M.O. 1442.2 and M01/1442/81~~

Whenever it is necessary for the Contractor, or personnel employed by him, to convert USA Dollars to Indonesian Rupiahs arrangements for such conversion shall be made through the US Disbursing Officer or the AID Jakarta Mission Controller as appropriate or as otherwise directed by the US Disbursing Officer.

* ~~Payments for any indonesian tax or contribution will not be made from the AID loan.~~

** ~~GC.32.4 Equipment and Materials Payment Schedule. Payment for the equipment and materials portion of this Contract will be made in accordance with the following schedule:~~

~~75% pro rata per shipment due fob ocean vessel. If shipment cannot be made due to force majeure conditions, payment will be made against Contractor's invoice and warehouse receipt.~~

~~15% Pro rata per shipment due upon Engineer's and Owner's certification of receipt of shipment at the Owner's plant site, but in no event later than six months after shipment from the factory or storage of the equipment~~

~~10% as provided hereinafter under Final Payment~~

~~100% of expenses incidental to export of the equipment including insurance, freight, and storage charges will be paid against Contractor's invoice and evidence of export or storage.~~

*Revised in accordance with Addendum 1, Item 28
**Revised for Contract

*GC.32.4 Equipment and Materials Payment Schedule. Payment for the equipment and materials portion of this Contract will be made in accordance with the following schedule:

a. Equipment and Materials. The payment percentages hereinafter stated apply to the equipment and materials Base Contract price stated in Article II of the Contract Agreement ($480,991.00) and stipulated in the Basis of Contract Award:

Progress Payments

Sixty per cent (60%) due as progress payments made upon Contractor's invoice and certification of Engineering/Manufacturing progress as provided under GC.32.1.1 and in accordance with the following time schedule:

September 1974	15%
December 1974	15%
March 1975	15%
June 1975	15%

Shipment Payment
(Delivery fob port of shipment)

30% due fob ocean vessel for shipment of the equipment and materials, or storage as provided in Article GC.17, unless, as certified by the Engineer, the Contractor is unable to load aboard vessel within 30 days after delivery to the dock for cause specified as force majeure in Article GC.16. Upon certification by the Engineer of such delay, payment shall be due 30 days after fas delivery.

Escalation Payment

100% of documented escalation certified by the Engineer for motors and gear sets as provided in Article GC.50 shall be paid within 90 days of delivery of equipment and materials fob maritime port of shipment.

Final Payment

10% as provided hereinafter under Final Payment, Article GC.32.6.

b. Export Expenses and Spare Parts. 100% of documented expenses incidental to export of the equipment including ocean freight, surcharges, ocean cargo insurance, unloading charges and storage charges fob will be paid against Contractor's invoice and evidence of export, or storage as provided in Article GC.17.

* Revised for Contract

GC.32.5 Field Services Payment Schedule. The Contractor shall prepare and submit requests for payment for the dollar and rupiah portions of the Contract relating to the Contractor's field technical advisers, service and training personnel in Indonesia each month to the Engineer. Upon approval of the request for payment by the Engineer and the Owner, the Owner will pay the rupiah value of the work performed during the preceding month not later than 60 days after receipt of the approved invoice; the invoices for the dollar portion of the work will be returned to the Contractor with the Engineer's and Owner's approval for presentation by the Contractor to the bank holding the Letter of Credit.

Separate requests for payment shall be submitted for the dollar and rupiah portions of the erection work. Payment in dollars will be made against the Letter of Credit. Payment in rupiahs will be made in Indonesia by the Owner.

GC.32.6 Final Payment. Upon official approval and acceptance of the work by the Owner, the Contractor shall prepare and submit to the Engineer, final invoices.

The invoices shall include the 10 per cent retainage of the contract prices for equipment and materials adjusted according to the provisions of this Contract. Subject to the Engineer's approval and certification, such final invoices will be submitted to the Owner within 60 days of the Engineer's receipt thereof; and the Owner will within 60 days after said final invoices are certified forward the final invoices and all other required documentation to the bank holding the Letter of Credit for payment to the Contractor.

Official acceptance will not be made until all work specified in the contract documents has been completed, all required inspections have been made, an acceptable performance test has been completed and the unit has attained commercial operation; however, at the option of the Owner, official acceptance may be made upon the satisfactory completion of an acceptance test performed after initial operation. Final payment will not be made until official acceptance is made by the Owner and all required certifications have been received, and a release of all claims against the Owner has been submitted.

In the event the Owner does not give official approval and acceptance of
* the work within ~~24~~ 24 months after the [redacted] because of any cause which is
* [redacted]
beyond the Contractor's control, the final payment will be made in the twenty-fifth month [redacted] providing the equipment and materials are in accordance with the specifications as far as can be determined.

fob date on which the shipment was complete,

* GC.32.7 Administrative Expenses. One hundred per cent (100%) of administrative expenses shall be paid immediately upon signing of the contract.

*Revised for Contract

*GC.33 BEGINNING, PROGRESS, AND TIME OF COMPLETION OF WORK. Unless otherwise specified the Contractor shall begin work under this Contract within 10 days after receipt of a notice to proceed from the Owner to be followed by the establishment of an irrevocable Letter of Credit in a mutually acceptable USA bank for the USA Dollar value of this Contract. The rate of progress shall be such that the work will be completed in accordance with the schedule named in the Contract Agreement. The Contractor shall furnish the Engineer a detailed schedule setting forth the procedure he proposes to follow and giving the dates he expects to start and to complete separate portions of the work. If in the opinion of the Engineer proper progress is not being maintained, changes shall be made in the Contractor's operations to assure proper progress.

**GC.34 LIQUIDATED DAMAGES. The term "Unit" used hereinafter and in the Contract Agreement shall be understood to mean either Unit 1 or 2 including the specified accessories of either unit of the Semarang Steam Power Plant as applicable; it shall not be construed to mean the individual items of equipment which are furnished under this Contract.

Liquidated damages as specified herein and in the Contract Agreement shall apply to each unit individually, not collectively to both units. The term contract price used in the limitation of the maximum amount of liquidated damages shall be understood to mean the contract price of the equipment for the designated unit, not the aggregate contract price of equipment for both Units 1 and 2, except if an item of equipment is common to both units.

Liquidated damages to certain categories of equipment and materials are not specified in the Contract Agreement on a generating unit basis in which case the liquidated damages will be assessed on the basis specified in the Contract Agreement.

It is understood and agreed that time is of the essence of the contract. Should the Contractor fail to complete delivery of the equipment and materials included in this Contract within the time period or periods stipulated in the Contract Agreement after due allowance for any extensions of time which may be granted under the provisions of these contract documents, the Contractor shall pay to the Owner, as stipulated liquidated damages and not as a penalty, the amount of liquidated damages stated in the Contract Agreement for each day of default. The total amount of liquidated damages assessed for failure to comply with the specified delivery schedule shall not exceed 10 per cent of the Contract Price Base ***for the equipment and materials excluding ocean freight, insurance, and port surcharges. 5 ocean cargo spare parts, maximum escalation,

The Owner shall have the right to deduct the liquidated damages from any moneys in its hands or otherwise due, or to become due, to the Contractor, or to sue for and recover compensation for such liquidated damages.

Unless otherwise specified the Contractor shall begin the work under this Contract within 10 days after receipt of a notice to proceed from the Owner to be followed by the establishment of an irrevocable Letter of Credit in a mutually acceptable USA bank for the USA Dollar value of this Contract.

*Revised in accordance with Addendum 1, Item 29
**Revised in accordance with Addendum 1, Item 30

(PLN - 6104) (EQUIPMENT & MATERIALS) 091373

***Revised for Contract

If the Engineer certifies that the failure to complete the delivery within the time herein agreed upon is directly due, in whole or in part, to inability of the Contractor to clear equipment and materials through Indonesian customs as a result of decision of the Owner in accordance with Article GC.22.2 not to permit the Contractor to pay Indonesian taxes, the Contractor will not be liable for liquidated damages to the extent that such damages are due to such inability to clear customs.

GC.35 AID PROCUREMENT SOURCE AND ORIGIN REQUIREMENTS. The Contractor shall comply with the following AID requirements.

GC.35.1 Geographic Source Provisions. All equipment, materials, and other commodities furnished under this Contract shall have their source and origin from countries designated as eligible in AID Geographic Code 941.

"Origin" shall mean the country in which such equipment or material was mined, grown, or produced through manufacturing, processing, or assembly. "Source" shall mean the country or territory from which such equipment or material is shipped to Indonesia; except that when the equipment or materials are shipped to Indonesia from a free port or bonded warehouse in the form in which received therein, "source" shall mean the country or territory from which the equipment or material was shipped to such free port or bonded warehouse.

A produced commodity shall be deemed of country origin if as a result of manufacturing, processing, or assembly in such country, a commercially recognized new commodity is produced that is substantially different in basic characteristics or in purpose or utility from any of its imported components.

Equipment and materials which are normally imported into Indonesia and stocked therein in the form in which imported to meet a general demand in Indonesia for the item, shall be deemed as being of Indonesian source and origin.

No produced commodity shall be eligible for AID financing if it contains components from a Communist Bloc country. (A country not specified in AID Geographic Code 935).

No produced commodity shall be eligible for AID financing if such commodity contains any components which were imported into the producing country and such components were acquired by the producer in the form in which they were imported; and the total cost of such components (delivered at the point of production) amounts to more than 50 per cent of the lowest price (excluding the cost of ocean transportation and marine insurance) at which the supplier makes the commodity available for export sale, whether or not financed by AID. Indonesian source goods and services are ineligible for AID financing with the exception of insurance and certain commissions as set forth in the AID Guidelines.

No produced commodity shall be eligible for AID financing if such commodity has been transported to Indonesia by: a transportation medium owned, operated, or under the control of any Communist Bloc country; a vessel which AID, by written notice to the Owner, has designated as ineligible; or under any ocean or air charter which has not received prior approval by AID.

GC.36 BOOKS AND RECORDS. The Contractor shall maintain adequate books and records covering all transactions under or in connections with this Contract. The books and records shall be maintained for a period of not less than 3 years after the date of final payment under this Contract. The books and records shall be available for inspection and audit by the Owner and/or AID to insure compliance with the requirements of this Contract. If the Contract is for a fixed price, an audit as to cost will not be performed except for cost reimbursable items; however, they will be subject to audit for compliance with source and origin, transportation, and comparable requirements.

GC.37 LEGAL EFFECT OF CERTAIN AID APPROVALS AND DECISIONS. The parties hereto understand that AID has reserved certain approval rights including but not limited to, the right to approve the terms of this Contract, the Contractor, and any or all plans, reports, specifications, subcontracts, bid documents, drawings, or other documents related to this Contract and the project of which it is part. The parties hereto further understand and agree that AID, in reserving any or all of the foregoing approval rights, has acted solely as a lender to assure the proper use of United States Government funds, and that any decision by AID to exercise or refrain from exercising these approval rights shall be made as a lender in the course of financing the project and shall not be construed as making AID a party to the contract. The parties hereto understand and agree that

AID may, from time to time, exercise the foregoing approval rights, or discuss matters related to these rights and the project of which this Contract is part, with the parties jointly or separately, without thereby incurring any responsibility or liability to the parties jointly or to any of them.

Any approval or failure to disapprove by AID of any plan, report, specification, contract, bid document, drawing or other documents shall not bar the Owner or AID from asserting any right or relieve Contractor of any liability which Contractor might otherwise have to the Owner or AID, because of such plan, specification, contract, bid document, drawing or other document, or any performance or failure of performance thereunder, or under any AID Contractor's or supplier's certificate.

GC.38 INELIGIBLE FIRMS. No equipment, material, or service shall be furnished under this Contract by any firm on the list of suspended, debarred, or ineligible firms maintained by AID. No USA firm or any other firm which is more than 50 per cent beneficially owned by a USA firm shall furnish equipment, materials, or services under this Contract if the USA firm is not in compliance with its equal employment opportunity obligations under Executive Order 11246, as amended and orders issued thereunder.

GC.39 COMMUNIST BLOC MATERIALS. No equipment, materials, or services, except ocean freight in connection with equipment and materials which are not AID financed, shall be furnished under this Contract if the source and origin thereof is a Communist Bloc country. A Communist Bloc country is defined as a country excluded from the Free World as specified in AID Geographic Code 935.

GC.40 SHIPPING. Not less than 50 per cent of the gross tonnage of equipment and materials furnished under this Contract shall be transported by privately owned USA flag commercial vessels to the extent that such vessels are available at fair and reasonable rates for USA flag vessels. The Contractor shall furnish documentation regarding the nationality of the vessels used to transport the equipment and materials.

The costs of ocean transportation and related delivery services will not be eligible for AID financing if the shipment is made:

a. On a carrier under the flag of a country not included in AID Geographic Code 941, unless shipment on such carrier has been approved by AID prior to shipment.

b. On a carrier under the flag of the Republic of Indonesia

c. On any carrier designated by written notice to the Owner as ineligible by AID

d. Under any charter covering full or part cargo which has not received prior approval by AID.

e. On any carrier owned, operated, or under the control of any Communist Bloc country.

GC.41 DIVERSION RIGHTS. AID reserves certain diversion and vesting rights to the extent and as provided under the Loan Agreement, Letters of Implementation, and other related documents. These rights may be exercised at the option of AID in the event of default by the Owner of agreements with AID which are not remedied, if an extraordinary situation shall arise which makes it improbable that the purposes of the loan will be attained or that the Owner will be able or willing to perform its obligations under AID agreements, or if disbursement by AID would be unlawful. The diversion and vesting rights include, among others, the provision that AID may direct the transfer of title to AID of goods financed by AID, provided the goods are from a source outside Indonesia, are in deliverable condition, and have not been off-loaded in Indonesia. In the event of exercise of these rights, the Contractor shall abide by the instructions of AID relative thereto.

GC.42 GOVERNMENTAL AUTHORIZATIONS. The Owner will assist the Contractor in obtaining any required authorizations for re-exporting tools, equipment, test equipment, unused materials, and the like, all of which are and remain the property of the Contractor, from Indonesia at the conclusion of the work. The Contractor will be required to re-export all of his equipment from Indonesia at the conclusion of his technical services. Any such materials which are to be retained or sold in Indonesia shall be disposed of in accordance with the regulations of the Government of Indonesia.

The Contractor, pursuant to its agreement to arrange for the USA export shipment on behalf of the Owner, will apply for any required export license. Whoever is the proper party under the applicable regulations shall make prompt application for any preference rating or other USA governmental authorizations which may be required to permit the manufacture of the equipment. The parties shall assist each other in every manner reasonably possible in securing such authorizations as may be required.

GC.43 CUSTOMS CLEARANCE. The Owner will be responsible for Indonesian customs clearance of all equipment and materials furnished under this Contract. Customs clearance will take place at the Port of Semarang, at the

international airport at Jakarta, or other appropriate port. All customs duties, taxes, and license fees necessary for such clearance will be for the account of the Owner.

It is contemplated that large amounts of equipment, materials, supplies, tools, etc. will be loaded overside ship directly onto barges. The Contractor shall furnish to the Owner and Engineer, necessary documentation so that prior arrangements can be made with customs officials for expeditious off loading from ocean going vessels into barges. Where necessary the Owner will arrange for unloading under customs bond to barges in order to facilitate ocean vessel unloading.

Documentation for customs clearance shall be submitted at least three weeks prior to the anticipated arrival of equipment and materials in Indonesia. Ten copies of the following documents shall be submitted to the Owner and two copies shall be submitted to the Engineer:

Bill of Lading
Packing List
Insurance Certificate
Invoice

The above documents shall be prepared in accordance with the applicable requirements of Article GC.32.1.1.

After customs clearance by the Owner and release of the goods by customs officials, the Owner will be responsible for transport from Semarang Harbor by barge, rail or truck to the site.

Tools and equipment for use during construction supervision but which are to remain the property of the Contractor and which are to be re-exported by the Contractor from Indonesia at the conclusion of the work shall be carefully documented and specially listed to facilitate both import and export. The Contractor shall determine prior to shipment the customs regulations applicable to this special case as well as normal import rules and regulations applicable.

GC.44 IMPORTED PERSONNEL. The Contractor shall submit to the Owner data on all personnel he intends to bring into Indonesia for the performance of the work. These data shall include the name and present address of each person, his intended assignment and responsibility in connection with the work, and a concise resume of his experience in the type of work to which he will be assigned. These data shall be submitted not later than 60 days prior to their expected arrival in Indonesia.

The Owner will review the information submitted and advise the Contractor of the suitability of the personnel listed. Any personnel found to be unsatisfactory to the Owner shall be replaced with personnel satisfactory to the Owner. The Owner's approval must be secured prior to withdrawal of any non-Indonesian personnel assigned to the work. Requests for withdrawal shall include the reasons for withdrawal, the duration of the withdrawal, or alternatively, data on the replacement personnel to be imported by the Contractor. If at any time after arrival of non-Indonesian personnel, the Owner shall notify the Contractor that any of them are in the Owner's opinion unsatisfactory, such persons shall be withdrawn and replacements satisfactory to the Owner shall be provided at the Contractor's expense.

Any expenses associated with illness of the Contractor's personnel, including replacement thereof, shall be at the Contractor's expense.

Costs of passports, visas, travel documents, inoculations and other incidental expenses incurred by the Contractor's non-Indonesian employees and their dependents occasioned by travel to and from Indonesia shall be borne by the Contractor.

The Owner will not furnish living quarters for the Contractor's personnel and families. The Contractor's employees may import for their personal use a reasonable quantity of household goods and personal effects. These goods will be exempt from import duties and taxes provided those not consumed are re-exported. The Owner will be the sole judge as to what constitutes a reasonable quantity based upon the rules and regulations of the Government of Indonesia. The non-Indonesian employees may import one automobile per family for their personal use exempt from import duties and taxes provided it is re-exported.

* The contractor and the expatriate personnel of the Contractor shall respect all Indonesian laws, rules, and regulations and shall not interfere with Indonesian political or religious affairs either directly or indirectly and shall comply with such other rules and regulations as the Contractor, Owner or Engineer may establish from time to time with respect to the expatriate personnel employed by the Contractor. The expatriate personnel of the Contractor shall work and live in harmony with their co-workers (both expatriate and Indonesian) employed on the work and at all times conduct themselves in an orderly
* manner. The expatriate personnel shall not engage, directly or indirectly, in any other employment, service, or business whatever, including dealings in real estate, nor shall they take part in local politics.

All expatriate personnel of the Contractor and its contractor under this Contract shall be citizens or residents of a non-Indonesian Code 941 country, shall remain employees of the Contractor, and shall receive their salaries and allowances

*Revised in accordance with Addendum 1, Item 31

directly from the Contractor. With regard to citizens or residents of the USA, the Contractor agrees not to discriminate against any employee or applicant for employment by reason of race, color, creed, sex or national origin in carrying out this Contract.

GC.45 REPORTING, SHIPPING, AND CLEARING DOCUMENTS. The Contractor shall provide all official forms and documentary information as shall be needed to satisfy the AID Loan.

GC.46 AID APPROVAL. This Contract and any amendment, modification, or assignment thereof shall not be effective unless and until approved by AID. Modifications not approved by AID will not be financed by AID.

GC.47 TERMINATION. Unless otherwise terminated under the provisions of the articles entitled RIGHT OF OWNER TO TERMINATE CONTRACT and TERMINATION FOR THE CONVENIENCE OF THE OWNER, this Contract shall be deemed terminated at the expiration of the guarantee period as provided for under the article entitled GUARANTEE.

GC.48 RELEASE OF INFORMATION. The Contractor shall not communicate or use in advertising, publicity, or sales releases, photographs or other reproductions of the work under this Contract, or descriptions of the size, dimensions, quantity, quality, or other information concerning the work unless prior written permission has been obtained from the Owner.

GC.49 AID GEOGRAPHIC CODES.

GC.49.1 AID Geographic Code 941 - Selected Free World. The United States (001 and 002), and any other independent country in the Free World*, excluding the cooperating country itself and the following:

Algeria	Greece	Netherlands
Andorra	Hong Kong	New Zealand
Australia	Iceland	Norway
Austria	Iraq	Portugal
Belgium	Ireland	Qatar
West Berlin	Israel	San Marino
Canada	Italy	Somali Republic
Cyprus	Japan	South Africa, Rep. of
Denmark	Kuwait	** ~~South Yemen~~ Yemen (Adan)
United Arab Republic (formerly Egypt)	Libya	Southern Rhodesia
	Liechtenstein	Spain
Finland	Luxembourg	Syria
France	Malta	Sweden
Germany, Fed. Rep.	Monaco	Switzerland

* "Free World" excludes communist countries or countries under communist domination, i.e., Union of Soviet Socialist Republics, Eastern Europe, Poland, North Viet Nam, North Korea, Mainland China, and other Chinese Communist-controlled areas, Outer Mongolia and Cuba.

**Revised in accordance with Addendum 1, Item 32

United Arab Emirates
United Kingdom
Vatican City
Yugoslavia

GC.49.2 AID Geographic Code 935 Special Free World. Any area or country in the Free World, including the cooperating country itself.

Countries excluded from the Free World are as follows:

- Cuba
- China (Mainland) and Other Chinese Communist-Controlled Areas, including
  - Manchuria
  - Inner Mongolia
  - Tsinghai Province
  - Sikang Province
  - Sinkiang
  - Tibet
  - The former Kwantung Leased Territory
  - The present Port Arthur Naval Base area
  - Liaoning Province
- Eastern Europe
  - Albania
  - Bulgaria
  - Czechoslovakia
  - East Germany (Soviet Zone of Germany and Soviet Sector of Berlin)
  - Estonia
  - Hungary
  - Latvia
  - Lithuania
  - Romania
- Korea, North
- Outer Mongolia
- Poland
- Union of Soviet Socialist Republics (USSR)
- Viet-Nam (North)

*GC.50 Escalation Adjustment. The Basis of Contract Award stipulates maximum escalation on auxiliary (gears and motors) equipment to be purchased by the Contractor from others for incorporation into the work. The adjustment for escalation will be computed by the Contractor and submitted to the Engineer for review, approval and onward transmittal to the Owner with the Engineer's certification within 30 days after fob shipment of all equipment and materials for this contract.

The actual escalation will be the net difference between the Contractor's purchase order price to the vendors (outside suppliers) for the four main pump gear sets and four motors and the vendors' invoices to the Contractor for these items up to the maximum stipulated in Article II of the Contract and in the Basis of Contract Award. The escalation computation and Contractor's invoice will be documented by the Contractor's purchase order to the vendors and the vendors' invoice to the Contractor as described above.

**Article GC.51 added for Contract as shown on Page GC-32A

* Added for Contract

*GC.51 CONTRACTOR'S PROPOSAL. The conformed documents reflect a negotiated contract between the Owner and the Contractor using as a starting point the specifications and addenda issued by the Owner, and the Contractor's proposals PE-9537 dated 24 January 1974 and PE-9537A dated 28 May 1974, and the Contractor's supplemental letter dated 5 June with attachment dated 4 June 1974.

The contract documents as conformed herein supersede the above mentioned Contractor's proposals, letters and attachments. In cases of any conflicts or inconsistencies between the conformed contract document and the above mentioned Contractor's proposals, letters, and attachments, the intent of the conformed contract document, whether written or implied, shall govern.

*Added for Contract

(PLN - 6104)
(AUXILIARY PUMPS M-26A)
(BOILER FEED PUMPS)
061974

PART 1 - GENERAL REQUIREMENTS

TABLE OF CONTENTS

		Page
Section 1A - GENERAL DESCRIPTION AND SCOPE OF THE WORK		1A-1 thru 1A-5
1A.1	General	1A-1
1A.2	Work Included Under These Specifications	1A-1
1A.3	Performance Guarantees	1A-2
1A.4	Miscellaneous Materials and Services	1A-2
1A.5	Work Not Included Under These Specifications	1A-3
1A.6	Schedule	1A-3
1A.7	Contractor's Services	1A-3
1A.8	Training Program	1A-5
Section 1B - GENERAL EQUIPMENT SPECIFICATIONS		1B-1 thru 1B-16
1B.1	General	1B-1
1B.2	Referenced Specifications and Standards	1B-1
1B.3	Quality Assurance	1B-1
1B.4	Factory Assembly	1B-1
1B.5	Packaging	1B-2
1B.6	Protection	1B-2
1B.7	AID Emblem	1B-3
1B.8	Weatherproofing	1B-3
1B.9	Source of Materials and Repair Parts	1B-3
1B.10	Design Coordination	1B-3
1B.11	Correction of Manufacturing Errors	1B-3
1B.12	Equivalent Materials and Equipment	1B-3
1B.13	Tools	1B-4
1B.14	Compressed Air	1B-4
1B.15	Control Power	1B-4
1B.16	Auxiliary Power	1B-5
1B.17	Welding	1B-5
1B.18	Shop Coating	1B-5
1B.19	Alignment and Balance	1B-6
1B.20	Lubrication	1B-6
1B.21	Drive Units	1B-6
1B.22	Shaft Couplings	1B-7
1B.23	Safety Guards	1B-7
1B.24	Equipment Bases	1B-7
1B.25	Instrumentation	1B-7
1B.26	Electrical Accessory Devices	1B-10
1B.27	Nameplates	1B-11
1B.28	Factory Prewired Electronic Systems Cabinets	1B-12
1B.29	AC Motor Starters	1B-12
1B.30	Raceway	1B-12
1B.31	Wiring	1B-13
1B.32	Cable Termination Provisions	1B-14

	Page
Motor Control Center Specification and Data Sheet	1B-15
Shipping Container Identification	1B-16
Section 1C - ENGINEERING DATA	1C-1 thru 1C-6
1C.1 General	1C-1
1C.2 Correspondence	1C-1
1C.3 Performance Curves	1C-1
1C.4 Motor Information	1C-1
1C.5 Drawings	1C-1
1C.6 Instruction Manuals	1C-4
Motor Information Sheet	1C-6
Typical Equipment Instruction Book Cover	A6104-030273
Section 1D - ELECTRIC MOTORS	1D-1 thru 1D2-2
1D.1 General	1D-1
Subsections	
1D1 - Integral Horsepower AC Motors	1D1-1 thru 1D1-12
1D2 - Fractional Horsepower AC Motors	1D2-1 thru 1D2-2

Section 1A - GENERAL DESCRIPTION AND SCOPE OF THE WORK

1A.1 GENERAL. This section covers the general description, scope of work, and supplementary requirements for equipment and services included under these specifications.

The equipment furnished under these specifications will be incorporated into a new steam power plant to be constructed on a site near the harbor at Semarang, Indonesia. The plant will have two oil fired steam electric generating units of approximately 50 megawatts capacity each.

1A.2 WORK INCLUDED UNDER THESE SPECIFICATIONS. The work under these specifications shall include furnishing the auxiliary pumps; delivery of same to Port of Semarang, Indonesia and unloading from transport; providing services and miscellaneous materials; all complete as specified herein and in accordance with the contract documents defined in Article GC.1 of the GENERAL CONDITIONS.

Pumps shall be furnished mounted on base plates with shaft couplings and motor drivers unless otherwise noted. Pumps which shall be furnished under these specifications are as follows:

Item 1

Four boiler feed pumps

** Item 2

The water pumps furnished under Item 2 of these specifications for each of the new generating units shall include the following:

Two auxiliary cooling water pumps for each unit

*The water pumps furnished under Item 2 of these specifications which are common to both Units 1 and 2 shall include the following:

Three screen wash pumps

Four air preheat coil pumps

Two makeup water fill pumps

Two service water pumps

Two city water booster pumps

*Revised in accordance with Addendum 1, Item 33
** Not included in this Contract

**

One evaporator brine pump

Two sea water supply pumps

* ~~Two lube oil transfer pumps~~

~~Two light oil supply pumps~~

~~Two fuel supply booster pumps~~

The oil pumps furnished under Item 1 of these specifications which are common to both Units 1 and 2 shall include the following:

Two lube oil transfer pumps

Two light oil supply pumps

Two fuel supply booster pumps

Item 4

One fire pump

The requirements stated below shall apply, as much as feasible, to the equipment furnished under these specifications:

All pumps shall be from the same manufacturer

All motors shall be from the same manufacturer

Equipment requiring lubrication shall be capable of operation using lubricants of the same specification

Equipment, materials, and accessories furnished shall be delivered to the Port of Semarang, Indonesia and unloaded from the transport, under these specifications. They will be received, transported to the plant site, unloaded, stored, and erected under separate specifications. Unloading from ships and storing at the site will not constitute acceptance.

The Contractor shall provide drawings and engineering data, manufacturer's field services, tools, instruction manuals, miscellaneous materials and services, and shall participate in design conferences, all as specified herein.

1A.3 PERFORMANCE GUARANTEES. The equipment furnished under these specifications will be tested by the Owner after installation to demonstrate its ability to operate satisfactorily under the conditions specified and to fulfill the warranties and guarantees set forth herein.

Specific performance guarantees are specified in the detailed specifications. Should the tests indicate that the equipment fails to meet guaranteed performance, the Contractor shall take immediate steps to correct the deficiencies in accordance with the requirements specified under GUARANTEE in the GENERAL CONDITIONS.

*Revised in accordance with Addendum 1, Item 34
** Not included in this Contract

1A.4 MISCELLANEOUS MATERIALS AND SERVICES. Miscellaneous materials and services not otherwise specifically called for shall be furnished by the Contractor in accordance with the following:

All nuts, bolts, and gaskets between components and equipment furnished under these specifications

All piping integral to, or between, any equipment furnished under these specifications

All necessary connections for the Owner's piping and instruments

One year's supply of all lubricants and greases

All necessary instrument and power and control wiring and raceways integral to any equipment furnished under these specifications. This shall include terminal blocks and internal wiring to these terminal blocks for equipment requiring external connection.

Coupling guards for all exposed shafts and couplings. Specifications shall be provided for all lubricants required.

Field office furnishings, supplies, telephone service, and equipment for the manufacturer's field representatives

Erection drawings, prints, information, instructions, and other data for use by the erection contractor

The use of all special tools required for erection of the equipment that are not included with the maintenance tools, including shipping costs to and from the jobsite

1A.5 WORK NOT INCLUDED UNDER THESE SPECIFICATIONS. The following items of work will be furnished by the Owner:

Transporting from the Port of Semarang, unloading and storing at the plant site, and field erecting all equipment

Foundations, anchor bolts, and sleeves

Motor controls and starters not otherwise specified to be furnished under these specifications

Grouting materials and placing thereof

*1A.6 SCHEDULE. The Contractor shall schedule production and shipment of the equipment and materials to assure fob shipment maritime port of shipment within 18 calendar months from the date of the Owner's signatue to this Contract.

Permanent electric wiring to connect equipment terminal boxes to the plant electrical system

Piping and valves except as otherwise specified herein

Finish painting of all equipment except as specified herein

Operating personnel for startup and tests

** 1A.6 SCHEDULE. The Contractor shall schedule production and shipment of the equipment and materials to assure delivery at the Port of Semarang, Indonesia during June 1975. end of ships tackle at the

Within 30 days after the contract award, a shipping schedule for major components shall be submitted by the Contractor for joint acceptance of the Owner and the Engineer.

1A.7 CONTRACTOR'S SERVICES. The services called for in WORK INCLUDED UNDER THESE SPECIFICATIONS shall be in accordance with the following.

1A.7.1 Submittal of Engineering Data. Drawings and other engineering data for the specified equipment and materials are essential to the design and subsequent construction of the entire generating unit. Time is of the essence in completing each phase of the work so that both units can be in commercial operation on the specified dates.

The Contractor will be required to submit drawings and engineering data in accordance with the schedule and requirements specified under Section 1C - ENGINEERING DATA, to assure compliance with the overall construction and operating schedule.

1A.7.2 Manufacturer's Technical Field Services. Upon request by the Owner, the Contractor shall provide the services of one or more technical field representatives to advise and assist the Owner in the erection of the equipment and materials furnished under these specifications, to inspect the equipment after erection, and to advise the Owner's personnel on proper operation of the equipment.

The Contractor shall state in his Proposal the costs to the Owner for providing such services. A per diem service cost for each representative, exclusive of living and travel expenses shall be stated based on an 8 hours per day 6 day work week. The hourly rate for overtime work in excess of 48 hours per week shall also be stated. The per diem rate for service shall apply only during working days at the site and not during the seventh day of

*Revised per Contract
**Revised in accordance with Addendum 1, Item 35

the week unless actually engaged in work at the site. The per diem rate will apply while the person is in transit to Indonesia.

The number of days of transportation time for which the per diem service rate will be paid shall be as agreed upon by the Contractor and the Owner based on actual travel time, but shall not exceed three days each way for travel to and from the United States.

Living and transportation expenses within Indonesia will be reimbursed by the Owner in rupiahs at actual cost, but not to exceed the per diem expense rate stated in the Proposal.

Transportation costs to and from Indonesia will be reimbursed at actual cost. Transportation fare shall not exceed economy jet fare by the shortest practical route. Transportation costs shall include passport and visa costs, innoculations required, and living expenses incidental to travel.

1A.7.3 Design Conference. Within 30 days after award of contract the Contractor's design engineer shall attend a design conference at a time and place in the USA mutually agreed upon to discuss matters relative to the execution of this Contract. Additional design conferences shall be held as required thereafter to expedite the work.

1A.7.4 Tools. The Contractor shall furnish and ship with the equipment one set of all special tools required for the erection, dismantling, or maintenance of the equipment as specified in Section 1B of these specifications.

Section 1B - GENERAL EQUIPMENT SPECIFICATIONS

1B.1 GENERAL. These General Equipment Specifications apply in general to all equipment and materials. Certain requirements specified herein will obviously not apply to the particular equipment and materials furnished under these specifications; however, where applicable to a particular item of equipment or material, these requirements shall apply.

These General Equipment Specifications are supplementary to the detailed specifications; if requirements in conflict with the requirements specified herein are specified in the detailed specifications, the detailed specifications shall govern to the extent of such conflict.

1B.2 REFERENCED SPECIFICATIONS AND STANDARDS. The specifications, codes, and standards referenced in these specifications (including addenda, amendments, and errata) shall govern in all cases where references thereto are made. In case of conflict between the referenced specifications, codes, or standards and these specifications, the latter shall govern to the extent of such difference.

The specification, code or standard applied in each case shall be the latest revision adopted and published at the date of taking bids. Any conflict between standards shall be referred to the Engineer who will determine which standard shall govern.

1B.3 QUALITY ASSURANCE. The Contractor shall maintain a quality program that provides that equipment, materials, and services under these specifications whether manufactured or performed within the Contractor's plant or at any other source shall be controlled at all points necessary to assure conformance to contractual requirements. The program shall provide for the prevention and ready detection of discrepancies and for timely and positive corrective action. The Contractor shall make objective evidence of quality conformance readily available to the Owner and the Engineer. Instructions and records for quality assurance shall be controlled.

1B.4 FACTORY ASSEMBLY. Equipment shall be shipped completely factory assembled, except when the physical size, arrangement or configuration of the equipment, or shipping and handling limitations make the shipment of completely assembled equipment impracticable, in which case the equipment shall be assembled and shipped as stated in the Contractor's proposal.

When proposals are submitted without statements describing sectional shipments, it will be understood that no field assembly of the equipment will be required and the Contractor shall be responsible for all cost encountered in the field for assembly of sections, accessories or appurtenances not listed in the Proposal as requiring field assembly.

1B.5 PACKAGING. All equipment and materials shall be suitably coated, wrapped, or covered and boxed or crated for export shipment and to prevent damage or deterioration during handling and storage at the site.

All accessory items shall be shipped with the equipment. Boxes and crates containing accessory items shall be marked so that they are identified with the main equipment. The contents of each box and crate shall be indicated by markings on the exterior.

An itemized list of contents shall be attached to the outside of each box or crate in a weather-resistant envelope. An identical list shall be included inside each box or crate. The lists shall be plainly marked and placed in an accessible location to facilitate receipt and inspection.

Each package or shipping unit shall be clearly marked as indicated on the sheet entitled "SHIPPING CONTAINER IDENTIFICATION" included at the end of this section.

Packaging or shipping units shall be designed within the limitations of the unloading facilities of the receiving ports and the ship which will be used for transport. Ships with special heavy capacity unloading rigging may be required for large units of equipment. It shall be the Contractor's responsibility to investigate these limitations and to provide suitable packaging and shipping to permit unloading at Jakarta or the Port of Semarang. "On deck" shipment will not be permitted unless prior approval has been obtained from the Engineer.

Electrical equipment, controls and insulations shall be protected against moisture and water damage. All external gasket surfaces and flange faces, couplings, motor pump shafts, bearings and like items shall be thoroughly cleaned, and coated with rust preventive compound as specified above, and protected with suitable wood, metal or other substantial type covering to insure their full protection.

1B.6 PROTECTION. Coated surfaces shall be protected against impact, abrasion, discoloration, and other damage. Surfaces which are damaged shall be repaired.

All exposed threaded parts shall be greased and protected with metallic or other substantial type protectors. All female threaded openings shall be closed with forged steel plugs. All piping, tubing, and conduit equipment connections shall be sealed with metallic or other rough usage covers and taped to seal the interior of the equipment piping, tubing, or conduit.

Provisions shall be made to ensure that water does not enter any equipment during shipment or in storage at the plant site.

Returnable containers and special shipping devices shall be returned by the manufacturer's field representative at the Contractor's expense.

1B.7 AID EMBLEM. All shipping containers shall carry the official AID clasped hands emblem. The emblem affixed to each shipping container shall be affixed in such a manner which assures that the emblem will remain legible until the shipment reaches the consignee. Size of the emblem in every case shall be large enough to be clearly visible at a reasonable distance. A list of emblem suppliers is available from AID.

The official AID clasped hands emblem shall be prominently displayed on all ships during loading and unloading when their cargo consists entirely of AID financed goods. Ship charterers shall include instructions relative to display of the emblem in the charter party agreements.

1B.8 WEATHERPROOFING. All outdoor equipment and all appurtenances shall be designed for satisfactory operation during 60 mile per hour wind and driving rain. All exposed unpainted parts shall be fabricated of corrosion resisting metal. All ventilating openings shall be louvered on outdoor equipment to prevent entrance of rain under weather conditions described above. All ventilating openings on outdoor equipment shall be equipped with fine mesh monel filters and stainless steel bug screens.

1B.9 SOURCE OF MATERIALS AND REPAIR PARTS. Equipment and accessories furnished shall be from a reputable manufacturer currently engaged in production of such materials.

Individual parts shall be manufactured to standard sizes and gages so that repair parts, furnished at any time, can be installed in the field.

1B.10 DESIGN COORDINATION. The Contractor shall be responsible for the selection and design of equipment and materials which will provide the best coordinated performance of the entire system. Components of rotating equipment shall be selected so that the natural frequency of the complete unit is not at or critically near the operating range of the unit.

1B.11 CORRECTION OF MANUFACTURING ERRORS. Equipment and materials shall be complete in all respects within the limits herein outlined. All manufacturing errors or omissions required to be corrected in the field shall be done by the manufacturer or his duly authorized representative at the Contractor's expense.

1B.12 EQUIVALENT MATERIALS AND EQUIPMENT. Whenever a material or article is specified or described by using the name of a proprietary product or the name of a particular manufacturer or vendor, the specific item mentioned shall be understood as establishing the type, function, and quality desired.

Other manufacturers' products will be considered provided sufficient information is submitted to allow the Engineer to determine that the products proposed are equivalent to those named.

1B.13 TOOLS. The Contractor shall furnish and ship with the equipment one set of all special tools required for the erection, dismantling, or maintenance of the equipment. The tools shall be shipped in separate heavily constructed wooden boxes provided with hinged covers and padlock hasps.

Maintenance tools shall be boxed separately and the boxes shall be marked as indicated on the sheet entitled "SHIPPING CONTAINER IDENTIFICATION".

Whenever possible, boxes containing tools shall be packed into larger containers with the equipment.

A weatherproofed itemized list of the contents shall also be indicated on the outside of each box.

The maintenance tools shall include all special handling rigs, bars, slings, and cable. All tools shall be in new and unused condition.

1B.14 COMPRESSED AIR. Filtered, dried, oil-free compressed air will be supplied for operation of pneumatic instruments and control valves. Normal house service air will be supplied for operation of other pneumatic devices. The compressed air will be supplied at receiver pressure varying from 70 to 100 psi.

Pressure regulators shall be provided for pneumatic devices which operate at pressure levels other than receiver pressure. Pressure regulators shall be Fisher Controls Co. Model 67 FR with pressure gage, or acceptable equal.

1B.15 CONTROL POWER. Electrical power for control and instrumentation will be a nominal 240 volt, single phase, 50 hertz, alternating current, or a nominal 250 volt direct current. The Contractor shall provide any devices required for proper operation and protection of the equipment during electrical power supply fluctuations described in the following paragraphs.

All dc electrical control and instrumentation devices shall be designed for continuous operation on an ungrounded station battery which will float on trickle charge at 258 volts. The Contractor shall guarantee satisfactory operation when the equipment is continuously energized at any voltage from 200 to 280 volts dc, with ambient temperatures as specified. Electrical devices served from this supply shall not impose any ground connections on it.

All alternating current control and instrumentation devices shall, unless otherwise specified, be designed for operation on a nominal 240 volt, 50 hertz, single phase, alternating current system. The Contractor shall guarantee satisfactory operation when the equipment is continuously energized at any voltage from 190 to 250 volts alternating current. Equipment required for operation at other nominal voltages shall be guaranteed to operate satisfactorily over proportional voltage variations. The dropout voltage shall be less than 140 volts for relays and 175 volts for contactors and starters.

All alternating current and direct current devices shall be guaranteed to operate satisfactorily under voltage conditions specified in the above
* paragraphs and at a range of ambient temperatures ~~from 50 C to 130 C~~ up to 50 C.

1B.16 AUXILIARY POWER. Auxiliary equipment, such as motors, transformers, and rectifiers, requiring electrical power shall be designed to operate from one of the nominal electrical power sources as follows:

Volts	Phase	Hertz
4160	3	50
416	3	50
240	1	50
250	DC	--

Preferred ac motor ratings shall be in accordance with the following schedule:

Horsepower	Volts	Phase
Below 3/4	220	1
3/4 to 250	380	3
250 and above	4000	3

Emergency motors shall be designed to operate on nominal 250 volts dc with voltage variations as described for dc control power.

Variations from preferred motor design voltages must be acceptable to the Engineer.

1B.17 WELDING. If the manufacturer has special requirements relating to the welding procedures for welds at the terminals of the equipment to be performed under separate specifications, the requirements shall be submitted to the Engineer in advance of all erection work.

1B.18 SHOP COATING. All metallic surfaces subject to corrosion shall be protected by suitable coatings applied in the shop. Surfaces which will be inaccessible after assembly shall be protected for the life of the equipment. The surfaces shall be cleaned and prepared in the shop. All mill scale, oxides, and other coatings shall be removed. Sand or grit blasting of internal areas which will be exposed to steam or treated feedwater will not be allowed. Exposed surfaces shall be finished smooth, thoroughly cleaned, and filled as necessary to provide a smooth uniform base for painting. Surfaces to be finish painted after installation, or requiring paint for corrosion protection until installation, shall be shop painted with one or more coats of primer as hereinafter specified.

1B.18.1 Painting. Transformers, switchgear, and other electrical equipment shall be shop finished with one or more coats of primer and two coats of high grade oil resistant enamel. The finish colors shall be manufac-

*Revised in accordance with Addendum 1, Item 36

Owner's standards, to be selected specifically by the Owner at a later date. The interior of all panels and switchgear shall be finished with gloss white enamel. A sufficient quantity of paint in each color shall be furnished to provide one complete coat for touchup.

Shop primer for steel and iron surfaces shall be Koppers "622 Rust Penetrating Primer", Mobil "13-R-50 Chromox QD Primer", or Tnemec "77 Chem-Prime" unless otherwise specified.

1B.18.2 Preservative Coatings. Ferrous surfaces which should not be painted shall be coated with rust preventive compound, Houghton "Rust Veto 334" or Rust-Oleum "R-9".

1B.18.3 Galvanizing. When so specified in the detailed specifications, structural steel members and bolts shall be galvanized. After all cutting, punching, reaming, drilling, and capping have been completed, structural steel members shall be "pickled" in accordance with the latest accepted practice, to remove all scale, rust, grease, and other impurities and then hot-dip galvanized in accordance with ASTM A123.

When specified to be galvanized in the detailed specifications, erection and structural bolts shall be galvanized in accordance with ASTM A394 for galvanized steel transmission tower bolts.

1B.19 ALIGNMENT AND BALANCE. All rotating parts shall be true and dynamically balanced. Excessive noise or vibration will be sufficient cause for rejection of the equipment. All rotating equipment shall be balanced at the factory.

1B.20 LUBRICATION. Equipment shall be lubricated by systems designed for continuous operation. Lubrication systems shall not waste lubricants and shall not require attention during startup and shutdown, or more frequently than once weekly. If pressure greasing of the equipment is required, the Contractor shall furnish grease guns for the Owner's use in maintenance.

Oil lubricant level indicators shall be furnished and marked to indicate proper levels under both standstill and operating conditions.

1B.21 DRIVE UNITS. Speed changing equipment furnished as a part of the equipment specified shall conform to the requirements herein.

The nominal horsepower rating of each drive unit shall be at least equal to the theoretical brake horsepower required to drive the equipment under full load, including all losses in speed reducers and power transmission.

The nominal input horsepower rating of each gear or speed reducer shall be at least equal to the nominal output horsepower of the drive motor or to the maximum power requirement for the driven equipment under the design conditions specified, whichever is greater.

Drive units shall be designed for continous service and shall include provisions which will prevent oil leakage around shafts.

1B.22 SHAFT COUPLINGS. Shaft couplings shall be used between all drives and driven equipment. Couplings shall be attached to driver and driven shafts by press fits and keys.

Shaft couplings shall be sized to transmit the maximum brake horsepower requirements of the driven equipment with a service factor of not less than 2.

Couplings shall be of the all metal lubricated gear flexible type, Koppers "Fast" or acceptable equal.

On applications where the motor is furnished under separate specifications, the motor half coupling shall be machined to the motor shaft dimensions on the motor drawing reviewed by the Engineer, and shipped to the motor supplier for shop mounting. The responsibility for proper fit of the coupling halves shall rest with the Contractor.

1B.23 SAFETY GUARDS. Guards shall be provided for protection of personnel from all exposed moving and/or rotating machine elements.

Each guard shall be fabricated from ASTM A36 steel plate having a minimum thickness of 3/16 inch and designed for easy installation and removal. Necessary supports and accessories shall be furnished with each guard.

Guards for outdoor installation shall be galvanized.

1B.23.1 Horizontal Shaft Equipment. Safety guards for horizontal shafts, shaft couplings, belt sheaves, etc. shall be of the inverted "U" design with sides extending to the equipment base or base plate.

1B.23.2 Vertical Shaft Equipment. Safety guards for vertical shafts, shaft couplings, etc. shall be of 360 degree construction with bolted vertical joints. Hinged sections shall be provided for inspection of couplings and glands.

1B.24 EQUIPMENT BASES. A cast iron or welded steel base plate shall be provided for all rotating equipment which is to be installed on a concrete base. Each base plate shall support the unit and its drive assembly, shall be of a neat design with pads for anchoring the units, shall have a raised lip all around, and shall have a threaded drain connection.

1B.25 INSTRUMENTATION. Accessory instrumentation components furnished with the equipment shall be in accordance with the requirements stated herein unless otherwise specified in the detail specifications. The devices specified shall be of the manufacture and model number herein specified, or an acceptable equal.

These devices shall be constructed in accordance with the latest applicable requirements of ANSI, ISA, and NEMA.

Permanently affixed, stainless steel tags stamped with the Engineer's tag number and a description of its use shall be furnished on all pressure switches, level switches, temperature switches, temperature elements, and solenoid valves.

* ~~Unless otherwise specified, all pressure instruments shall have metric and English scales and all temperature instruments shall have metric scales. Pressure instruments shall have scales in kilograms per square centimeter and in pounds per square inch. Temperature instruments shall have scales in degrees centigrade.~~

1B.25.1 Limit Switches. Limit switches, except those integrally mounted on motor operated valves, shall be selected from the following alternates:

(a) National Acme Company "Snaplock" Series SL. Switches shall have not less than two dpdt switch elements.

(b) Honeywell "Microswitch" DTF2-2RN, or variation thereof, with two dpdt switch elements

Limit switches shall be constructed to withstand the temperatures encountered in the actual service. Explosionproof construction shall be furnished where required by applicable code or the detailed specifications.

1B.25.2 Pressure Switches. Pressure switches shall be selected as follows:

(a) Static switches shall be Static "O" Ring.

(b) Differential pressure switches for low range application shall be manufactured by FW Dwyer.

(c) Differential pressure applications requiring both indication and pressure switch contacts shall be implemented with equipment manufactured by Barton Instrument Corporation regardless of the range.

Pressure switches shall be furnished in explosionproof construction where required by applicable code or the detailed specifications. Each pressure switch shall be specifically selected for the service in which it is used. The acceptability of each switch with respect to range, overpressure capability, capability, repeatability, and deadband shall be demonstrated to the Engineer.

1B.25.3 Temperature Switches. Temperature switches shall each consist of a thermocouple as described under "Temperature Detectors" and an electronic instrument. Electronic instruments shall be Rochester Instrument Systems, Inc., Series ET-205, complete with dual, double-pole, double-throw relays wired to terminals. Each of the two electronic instrument

Unless otherwise specified, all pressure and temperature instruments shall have metric scales. Scales shall be in kilograms per square centimeter for pressure instruments and in degrees centigrade for temperature instruments.

(PLN - 6104)
(EQUIPMENT)
052973

*Revised in accordance with Addendum 1, Item 37

relays in a temperature switch shall operate from an independent, calibrated set point. Electronic instruments shall be suitable for use with ISA Type K thermocouples.

1B.25.4 Level Switches. Level switches shall be Magnetrol having float and body construction appropriate to the service conditions of the systems to which they are connected. Switch elements shall be of the mercury bottle type magnetically coupled to the float. Two switch elements shall be available at each level point monitored. Switches shall be reversible for NC or NO operation or shall be double throw construction. Switch element leads shall be of high temperature construction and terminated on terminal blocks within the switch housing. Switch housings shall be splashproof construction, unless otherwise specified.

1B.25.5 Solenoid Valves. Solenoid valves shall be manufactured by Automatic Switch Company. Valves shall be selected to incorporate body construction, trim materials, and internal arrangements suitable to the application and shall be acceptable to the Engineer. Solenoid enclosures shall be NEMA 4 unless otherwise specified. Solenoid coils shall be Class H high temperature construction and shall be suitable for continuous duty.

1B.25.6 Pressure Gages. Gages for control air supply and signal pressures integral to the instrument shall be in accordance with the control manufacturer's standards. All other gages shall be 4-1/2 inch Ashcroft "Duragauge". Dials shall be engraved with service legends, or separate nameplates of engraved laminated phenolic shall be attached to the gage faces to identify the service. Legends shall be as directed by the Engineer. All gages, except on control air service, shall have stainless steel movements and nylon bearings. Gages for panel mounting shall be Type 1377. Gages for separate mountings shall be Type 1379 with 1/2 inch NPT bottom connections. Pulsation dampeners shall be furnished with all gages except control air gages.

1B.25.7 Thermometers. Thermometers for local mounting shall be Ashcroft 5 inch dial AHT 6060 "Every Angle" bimetallic thermometers. Thermometers for panel mounting shall be Ashcroft 4-1/2 inch dial 6135 mercury actuated with Type 1377 case and stainless steel armored capillary tubing of length required for the installation. The dials shall be engraved with service legends, or separate nameplates of engraved laminated phenolic shall be furnished attached to the dial faces to identify the service. Legends shall be as directed by the Engineer. Thermowells shall be furnished for all thermometers and shall be extra heavy solid bored Type 316 stainless steel construction. They shall be threaded and designed to allow seal welding.

1B.25.8 Temperature Detectors. All detectors shall be of the dual element type. Detectors shall be ISA Type K (chromel-alumel) thermocouples with Type KX extension wire. Temperature detectors shall be of the stainless

steel sheathed, compacted magnesium oxide insulated type, and shall be ungrounded unless otherwise specified. Thermocouples and extension wire shall comply to the special limits of error contained in ANSI C96.1-1964.

Thermocouple assemblies shall be complete with cast iron weatherproof connection heads and nipples. Extension nipples, insulating bushings, and compression fittings shall be furnished if required for the application. Heads shall be designed for positive connection and for a terminal temperature differential of not more than 0.1 F. The thermocouple shall be spring loaded for positive contact with the wall. The lead wire for all related detectors shall be brought to common junction boxes.

Fluid system temperature detectors shall be equipped with extra heavy solid bored Type 316 stainless steel thermowells and extension nipples. The thermocouple, extension nipple, and head shall be arranged to permit removal and replacement of the thermocouple with the equipment in operation.

1B.26 ELECTRICAL ACCESSORY DEVICES. Electrical accessory devices shall be furnished in accordance with the requirements stated herein unless otherwise specified in the detailed specification sections.

1B.26.1 Electrical Instruments. All electrical indicating instruments shall be of the switchboard type with one per cent accuracy classification, shall be designed for semiflush mounting and, unless otherwise specified, shall be approximately 4 inches square. All instrument scales shall consist of black markings on a white background. Any instrument which is checked in the field and found to be inaccurate in excess of 2 per cent shall be returned to the Contractor for calibration or replacement without cost to the Owner. All ac instruments shall be designed for operation through 5 ampere current transformers secondaries and 120 volt potential transformer secondaries. Instruments shall be General Electric Type AB-40, Westinghouse Type 241, or acceptable equal.

1B.26.2 Control Relays. General service auxiliary relays shall be I-T-E Type J10A, J11A, J12A, J13P, or acceptable equal. Where current carrying requirements exceed the capacity of the J10A, auxiliary relays shall be General Electric Types HFA or HGA, Westinghouse Type MG-6 or acceptable equal.

Timing relays where the delay period may exceed 3 minutes shall be Agastat Series 7000 or acceptable equal.

1B.26.3 Control Switches. Control switches shall be 600 volt, 20 ampere, multistage, rotary type with a minimum of ten contacts. Switches shall have black, fixed, modern, pistol grip type handles and engraved black plastic escutcheon plates. Switches shall be Westinghouse Type W, General Electric Type SB-1, or acceptable equal.

1B.26.4 Push-buttons and Selector Switches. Push-buttons and selector switches shall be Square D, Class 9001, Type T or TS oiltight, Honeywell-Microswitch Type PT, or acceptable equal.

1B.26.5 Indicating Lights. Indicating lights shall be Honeywell-Micro Switch Type PTW with 387 lamps, transparent glass lenses, and appropriately sized resistors. Alternate equal indicating lights must be acceptable to the Engineer.

1B.26.6 Alarm Contacts. Alarm contacts for remote annunciation shall be suitable for operation at 250 volts dc.

1B.26.7 Molded Case Circuit Breakers. Molded case circuit breakers used in equipment covered under these specifications shall have 5000 amperes interrupting capacity at 250 volts dc and 10,000 amperes symmetrical interrupting capacity at 240 volts ac.

1B.26.8 Terminal Blocks. Terminal blocks shall be provided with white marking strips and, where permitted by the safety codes and standards, shall be without covers. Extra terminals in a quantity of not less than 25 per cent of the intraconnected terminals shall be provided on each terminal block for circuit modifications and for termination of all conductors in a multiconductor cable.

Fuses shall not be mounted on terminal blocks. Neither step type terminal blocks nor angle mounting of terminal blocks will be acceptable.

All terminal blocks, except internal terminal blocks in factory prewired electronic systems cabinets, shall be rated 600 volts and shall have strap screw terminals. Standard terminal blocks for 10 AWG and smaller conductors shall be General Electric Company Type EB-5 or acceptable equal. Terminal blocks shall be appropriately sized for larger incoming conductors. Shorting type terminal blocks shall be six point General Electric Company Type EB-5 or acceptable equal.

1B.26.9 Fuse Blocks. Where fuse blocks rated 30 amperes, 250 volts are required by the specifications or the manufacturer's design, they shall be modular type with bakelite frame and reinforced retaining clips. Blocks shall be Class H, Model No. 15530-R screw terminal fuse blocks and manufactured by Underwriters' Safety Device Co., 4332 North Kedzie Avenue, Chicago, Illinois 60618. Blocks for other current and voltage ratings shall be similar in construction and by the same manufacturer.

Article 1B.27 for Electrical equipment:

1B.27 NAMEPLATES. The nameplates for the power transformers shall be lettered in both English and Indonesian. Nameplates for other equipment shall be in English.

Nameplates shall be provided for switches and other devices and shall be lettered in English with legends and nameplates acceptable to the Engineer.

Panel mounted instruments shall have nameplates made of laminated black phenolic engraving stock with white core. The lettering shall be not less than 1/4 inch square, bold engraved through the black outside layers so that the letters appear white.

Nameplates for locally mounted instruments shall be attached to the faces of the instruments in a manner acceptable to the Engineer.

1B.28 FACTORY PREWIRED ELECTRONIC SYSTEMS CABINETS. Internal wiring in factory prewired electronic systems cabinets may be installed according to the Contractor's standard as to wire size insulation and method of termination on internal equipment. Identification of conductors may be done by insulation color coding identified on drawings or by printed wiring lists. Terminal blocks for connection of external circuits into factory prewired electronic systems cabinets shall meet all the requirements specified above under Terminal Blocks.

1B.29 AC MOTOR STARTERS. The Motor Control Center Specification and Data Sheet, following this section, shows the wiring of the ac motor starters which will be furnished by the Owner. The Contractor shall assure that the control wiring, including terminal designations, is compatible with the starter wiring as shown.

1B.30 RACEWAY. Unless specified otherwise, all raceway interconnections between devices, panels, boxes, and fittings shall conform to ANSI C80.1 and UL 6. All conduit connections shall be of the threaded type. Unless specified otherwise, all conduit shall be hot-dip galvanized rigid steel. All conduit entering outdoor enclosures shall enter through "Meyers Scru-Tite" hubs or threaded openings.

Double locknuts and bushings shall be provided at the termination of all conduit not terminated in hubs. Locknuts shall be designed to securely bond the conduit to the box or cabinet when tightened.

Insulating bushings with insulating inserts in metal housings shall be provided on conduit 1-1/4 inches and larger. Insulating bushings shall be grounding type. Standard bushings shall be galvanized.

Conduit fittings used on outdoor equipment shall be of heavy cast construction and shall be sealed and gasketed.

All conduit shall be installed in exposed runs parallel or perpendicular to dominant surfaces with right angle turns made of symmetrical bends or fittings. A run of conduit shall not contain more than the equivalent of four quarter bends, including those immediately at outlets and fittings. Bends in conduit shall be made without reducing the internal diameter of the conduit.

Conduit shall be supported at intervals not to exceed 5 feet by means of conduit clamps and clamp-backs.

Moisture pockets shall be eliminated from conduit installed on outdoor equipment. If water cannot drain to the natural opening in the conduit system, a hole shall be drilled in the bottom of a pull box or a "C-type" conduit fitting provided in the low point of the conduit run.

Conduit shall be securely fastened to all boxes and cabinets. Threads on metallic conduit shall project through the wall of the box to allow the bushing to butt against the end of the conduit. The locknuts both inside and outside shall then be tightened sufficiently to bond the conduit securely to the box.

The raceway system provided for all interconnecting wiring shall be acceptable to the Engineer.

1P 21 WIRING. In general, all devices furnished under these specifications and requiring electrical connnections shall be designed for wiring into junction boxes or cubicles with terminal blocks. Terminal blocks shall be provided for conductors requiring connection to circuits external to the specified equipment, for internal circuits crossing shipping splits, and where equipment parts replacement and maintenance will be facilitated.

All spare contacts on relays, control switches, limit switches or similar devices shall be wired to accessible terminal blocks for the Owner's future connections. All wiring leaving an enclosure shall leave from terminal blocks and not from other devices in the enclosure.

Auxiliary equipment such as terminal blocks, auxiliary relays or contactors shall be readily accessible. Auxiliary equipment shall be arranged in compartments, cubicles, or junction boxes that a serviceman will have direct access to the equipment without removal of barriers, cover plates, or wiring. Grouped terminal blocks for all external connections shall be provided.

Terminal blocks shall be grouped in instrument and control compartments for easy accessiblity unrestricted by interference form structural members and instruments. Sufficient space shall be provided on each side of each terminal block to allow an orderly arrangement of all leads to be terminated on the block.

A shorting type terminal block shall be installed at an accessible location for each current transformer. The shorting terminal block shall be the one nearest the current transformer.

Terminal blocks shall not be mounted in compartments containing cables or buses operating at voltages above 600 volts.

All wiring shall be conservatively selected for the electrical and environmental conditions of the installations. Unless otherwise specified or required otherwise to perform satisfactorily in a particular service, all

electrical conductor shall be Class B, stranded copper, 14 AWG or larger. Oil resistant and proper temperature application wiring shall be used throughout. MI cable is not acceptable. Control panel and cabinet wiring shall be stranded copper conductor with NEC Type SIS, cross-linked polyethylene insulation rated at 600 volts, designed for a maximum conductor temperature of 90 C, and shall meet the vertical flame test requirements per IPCEA S-19-81, Paragraph 6.19.6. Conductor insulation for other general service wiring shall be flame retardant polyethylene according to IPCEA S-19-81, Part 3.18. NEC Type SF-2 silicone rubber insulated cable with braided glass jacket shall be used where ambient conditions cause conductor operating temperatures to exceed 90 C.

Preinsulated ring-type terminals with crimp guides or preinsulated slotted spring spade terminals shall be provided on all control conductor terminals, except, noninsulated terminals shall be provided on devices equiped with individual fitted covers. Typical devices upon which control conductors shall be terminated with noninsulated terminals are General Electric Type SB-1 and Westinghouse Type W control switches and General Electric HEA and Westinghouse Type WL lockout relays.

Each terminal block, conductor, relay, breaker, fuse block, other auxiliary device, and terminal shall be permanently labeled to coincide with identification indicated on the drawings. All terminals provided for termination of external circuits shall be identified by inscribing circuit designations acceptable to the Engineer on the terminal block marking strips with black paint. All other wiring terminations shall be identified either by legible markings on the device terminals or by printing on wire sleeves. Terminal and conductor identification shall be by a permanent method unaffected by heat, solvents, or steam, and not easily dislodged, preferably by means of printing on plastic sleeves. Identification of conductors shall be by the method described hereafter or acceptable equal. Conductor identification shall be with slip-on sleeves not less than 1/2 inch long. The sleeves shall be as manufactured by the Dura Mark Company, Port Washington, New York. Conductor identification shall be printed on the sleeve with a Thomas and Betts Company Catalog No. WT163M-1 marking pen, Panduit Corp. Part No. PX marking pen, or acceptable equal. After inscription of the conductor identification, the marking sleeve shall be coated with clear acrylic spray coating, Krylon No. 1303 as manufactured by Borden, Inc., or acceptable equal. Adhesive labels are not acceptable.

The arrangement of connections on terminal blocks shall be acceptable to the Engineer.

All connections requiring disconnect plug type devices shall be provided with factory terminated conductors on both sides of each plug. Sufficient multiconductor cable shall be provided to connect the plugs into junction boxes containing terminal blocks for the Owner's external connections. All conductors on the disconnect portion of plugs shall be in a common jacket.

All temporary wiring installed in the factory for equipment testing shall be removed prior to shipment of the equipment.

1B.32 CABLE TERMINATION PROVISIONS. Electrical conductors supplying the equipment provided under these specifications will be sized for installation in covered electrical cable tray to a 4 inch loading depth and with 40 per cent random fill. Sizing will be in accordance with the requirements of the following standards:

IPCEA - NEMA Standard of Ampacities of Cables in Trays, 1972

AIEE - IPCEA Power Cable Ampacities Handbook, 1962 (IPCEA P-46-426 & IEEE Publication No. S-135)

IPCEA Short Circuit Characteristics of Insulated Cable, Publication P-32-382, 1969

Capacity of conduit entrances, terminal enclosures, and conductor terminals shall be as required to accommodate either copper or aluminum conductors which are sized as described in the previous paragraph.

ITEM

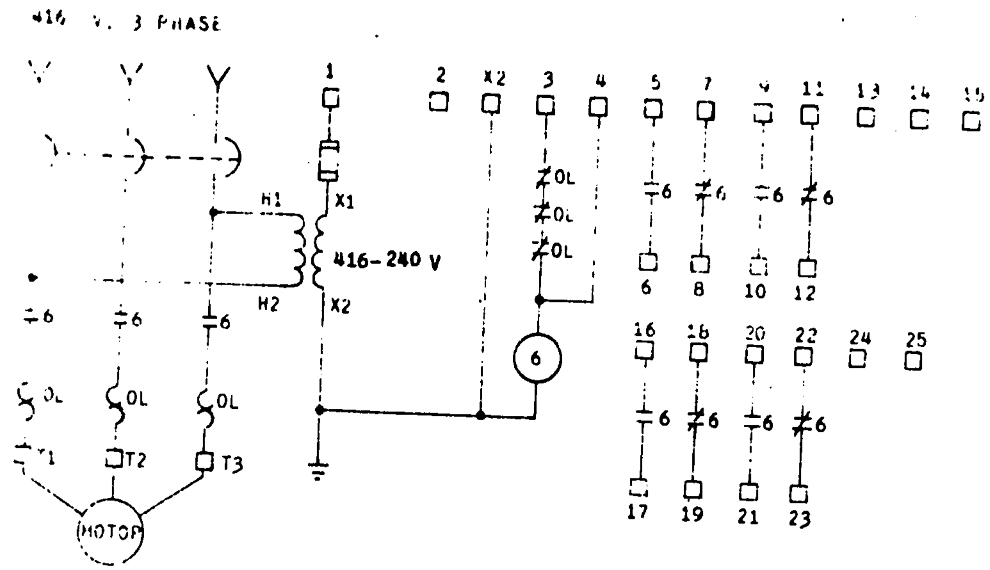

WIRING DIAGRAM COMBINATION FULL VOLTAGE NON-REVERSING STARTER

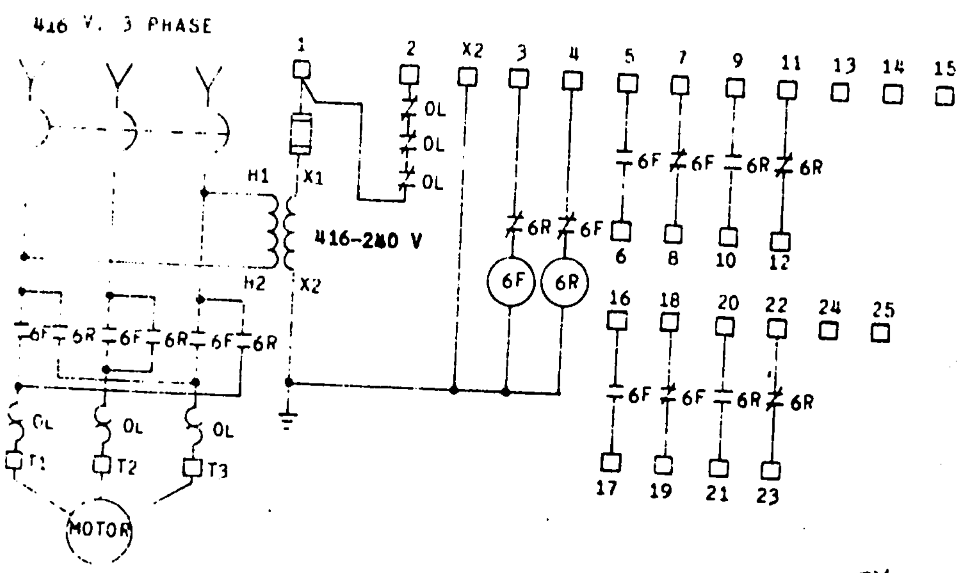

BEST AVAILABLE COPY

WIRING DIAGRAM COMBINATION FULL VOLTAGE REVERSING STARTER

BLACK & VEATCH INTERNATIONAL
CONSULTING ENGINEERS
KANSAS CITY, MO.

MOTOR CONTROL CENTER
SPECIFICATION AND DATA SHEET

1B-16

YELLOW

PROJECT AID
BARANG PEMERINTAH
PROYEK PELITA

RED
BLUE

PERUSAHAAN UMUM LISTRIK NEGARA
PROYEK PLTU SEMARANG
JL. SILIWANGI 379 SEMARANG

L/C NO.:
I.R. NO.:

SEMARANG
INDONESIA

CASE NO.:

GROSS WEIGHT:
NET WEIGHT:
DIMENSION:

NOTES:
1. THE ABOVE MARKINGS ARE TO BE PLACED ON TWO OPPOSITE STANDING SIDES.
2. TAGS ARE TO BE MARKED AS SHOWN ABOVE EXCEPT THAT CORNER MARKINGS ARE NOT REQUIRED.
3. TAGS ARE TO BE PROTECTED FROM FADING.
4. AID "CLASPED HANDS" EMBLEM SHALL ALSO BE APPLIED TO ALL SHIPPING CONTAINERS.

BLACK & VEATCH INTERNATIONAL CONSULTING ENGINEERS KANSAS CITY MISSOURI USA	SHIPPING CONTAINER IDENTIFICATION	PROJECT 6104
	PERUSAHAAN UMUM LISTRIK NEGARA SEMARANG STEAM POWER PLANT UNITS 1&2	PAGE 1B-17

Section 1C - ENGINEERING DATA

1C.1 GENERAL. This section covers engineering data, instruction manuals, and manufacturer's drawings which the Contractor shall submit to the Engineer for design information or review. As stipulated in Section 1A, compliance with the specified schedule for drawing and data submittal is essential to the scheduled progress and completion of Units 1 and 2 and is of the essence of this Contract.

1C.2 CORRESPONDENCE. Correspondence forwarding drawings, instruction manuals, and other engineering data shall be addressed as follows:

Black & Veatch International
P.O. Box 8405
Kansas City, Missouri 64114

Attention: Mr. L. J. Svoboda

1C.3 PERFORMANCE CURVES. Within 30 days after contract effective date, 12 copies of the following performance curves shall be submitted for the Engineer's acceptance:

Certified characteristic curves as specified Part 2

Certified speed-torque curves for pumps

Certified speed-torque, speed-current, and safe time current curves for pump motors

1C.4 MOTOR INFORMATION. A sample Motor Information Sheet is bound at the end of this section. The successful bidder shall submit copies of this sheet, with all data filled in as indicated, for each motor rating for which a Motor Specification and Data Sheet has been included in these specifications. These sheets shall be completed and copies submitted as specified in this Section 1C. The number of copies required shall be the same as for other manufacturer's drawings.

1C.5 DRAWINGS. Drawings shall be submitted for the Engineer's review in accordance with the following procedures and schedules.

1C.5.1 Procedures. Drawings shall be in sufficient detail to indicate the kind, size, arrangement, weights of each component, breakdown for shipment, and operation of component materials and devices; the external connections, anchorages and supports required; the dimensions needed for installation and correlation with other materials and equipment; and the information specifically requested in this section under "Schedules".

Six copies of each drawing, preliminary or certified, shall be submitted to the Engineer. Each drawing submitted, shall be clearly marked with the name of the project, the specification number, the Engineer's assigned number, the Contractor's name, and references to applicable specification paragraphs. When catalog pages are submitted, the applicable items shall be indicated.

"Preliminary" drawings shall be reasonably complete and suitable for the Engineer's use in establishing basic plant arrangement and design requirements. Preliminary drawings will not be reviewed by the Engineer; however, the Engineer will refer to the Contractor conflicts or discrepancies which he may discover in his reference to the drawings.

"Certified" drawings will be reviewed by the Engineer and returned to the Contractor marked RETURNED FOR CORRECTION, EXCEPTIONS, NOTED, NO EXCEPTIONS NOTED, or RECEIVED FOR DISTRIBUTION.

When the drawings are returned marked NO EXCEPTIONS NOTED or RECEIVED FOR DISTRIBUTION, additional copies shall be submitted to the Engineer for distribution. The number of additional copies will be determined by the Engineer, but will not exceed six.

When the drawings are returned marked EXCEPTIONS NOTED the changes shall be made as noted thereon and corrected copies shall be submitted to the Engineer for final review and distribution. The number of corrected copies will be determined by the Engineer, but will not exceed twelve.

When the drawings and data are returned marked RETURNED FOR CORRECTION the corrections shall be made as noted thereon and as instructed by the Engineer and six corrected copies shall be resubmitted for review.

The Engineer's review of drawings and data will cover only general conformity to the specifications and the external connections and dimensions which affect the plant arrangement. The Engineer's review of drawings returned marked NO EXCEPTIONS NOTED, or EXCEPTIONS NOTED does not indicate a thorough review of all dimensions, quantities, and details of the material, equipment, device, or item indicated and does not relieve the Contractor from any responsibility for errors or deviations from the specification requirements.

No work shall be performed in connection with the fabrication or manufacture of equipment and materials until the drawings and data therefor have been reviewed by the Engineer. Work may proceed on equipment and materials when the drawings and data therefor have been returned marked NO EXCEPTIONS NOTED or RECEIVED FOR DISTRIBUTION and when drawings have been marked EXCEPTIONS NOTED provided the work is performed in accordance with the Engineer's notations.

All drawings, after final processing by the Engineer, shall become a part of the specification documents and the work indicated or described thereby shall be performed in conformity therewith unless otherwise required by the Owner or the Engineer.

When changes in the wiring and equipment are made in the field to correct shop construction errors or to adapt the requirements to the Owner's requirements, the Contractor shall prepare and submit 12 copies of record drawings to the Engineer to indicate the equipment as finally installed.

Upon receipt from the Engineer the drawings marked NO EXCEPTIONS NOTED or RECEIVED FOR DISTRIBUTION, the Contractor shall transmit two full size reproducible prints of each drawing to the Engineer. The reproducible shall be right reading, on 0.003 inch thick Du Pont wash-off mylar and shall not exceed 34 inches by 44 inches in size. Diazo sepias, black line mylar, or auto-positive reproducibles will not be acceptable.

Three microfilm aperture cards of each final drawing shall be submitted. Microfilming and aperture card mounting shall be in accordance with the applicable requirements of Military Specifications MIL-M-9868, and MIL-M-38761.

1C.5.2 Schedules. Drawings shall be submitted in accordance with the following schedules. The number of days specified shall be from and after the date of contract award.

a. For preliminary issue within 30 days and certified issue within 60 days:

   Detailed outline drawings of each pump

   Motor drawings

   Soleplate, base plate, and motor support drawings

b. For preliminary issue within 30 days and certified issue within 75 days:

   Completed Motor Information Sheets

   Coupling drawings

   Miscellaneous piping drawings

   Electrical schematics and wiring diagrams

   Erection drawings

1C.5.3 Wiring Diagrams. Connection and interconnection wiring diagrams furnished by the Contractor shall meet the requirements of ANSI Y 14.15a-1971, Section 15-11, Article 15-11.3.2.1, BRANCHED HIGHWAY. The wiring drawings shall be drawn with all devices indicated in their relative physical locations. Wiring diagrams shall be rear view. Each device connection shall have near each termination, indicated in separate breaks, the opposite end destination.

Wiring diagrams shall be prepared on sheets approximately 34 inches by 44 inches. Where interconnecting wiring from different items of equipment or sectional wiring diagrams of the same item of equipment appear on different wiring diagram sheets, all interconnections shall be clearly identified. Where sectional wiring diagrams are required for a single item of equipment such as a relay panel or control panel, that section of the panel which is represented by each individual wiring diagram sheet shall be keyed on that sheet in a manner acceptable to the Engineer.

Information indicated on the Contractor's drawings shall include wiring of the individual panel items as they actually will appear in the panel, contact arrangements of switches, and internal wiring of relays and instruments.

Elementary diagrams shall be cross-referenced to terminal markings on the connection and interconnection diagrams, but need not show complete details of circuits external to the panels. Each item of panel mounted equipment indicated on the diagrams shall be identified by item number and name.

Sufficient space shall be left on the Owner's side of outgoing terminal blocks for adding cable color codes and circuit numbers.

1C.6 INSTRUCTION MANUALS. The Contractor shall furnish 10 complete and final copies of instruction manuals for the equipment not later than 30 days prior to the shipment of the equipment.

Nine final copies of the instruction manuals shall be sent to the Owner and one final copy shall be sent to the Engineer.

Manuals shall be assembled and bound in Buchan Type ORL (old style) binders covered with pyroxylin impregnated black buckram covers, manufactured by Buchan Loose Leaf Records Co., Clifton Heights, Pennsylvania. Binders shall not be greater than 3-1/2 inches thick and shall be adjustable to permit secure compact binding. Each binder shall be stamped with the proper identification as indicated on Drawing A6104-030273 bound at the end of this section. Binders shall be black with gold lettering.

A complete proofed copy of the proposed manual, including cover lettering, shall be submitted to the Engineer for acceptance. After acceptance, the remaining copies shall be submitted as directed by the Engineer.

The manuals shall include the following:

Table of Contents and index tabs

Specifications, test data, and curves

Description of the equipment

Operating instructions

Instructions in methods of receiving, inspection, storage, and handling

Complete installation and maintenance instructions

Assembly drawings

Parts lists

Schedule of required lubricants

Nameplate information and shop order numbers for each item of equipment and component part thereof

List of recommended spare parts and prices

List of maintenance tools furnished with the equipment

MOTOR

ITEM _____
SPEC M-26A
PROJECT 0100

MOTOR DATA TO BE SUBMITTED BY SUCCESSFUL BIDDER AS SPECIFIED

INFORMATION REQUIRED FOR ALL MOTORS.

HP _____
FULL LOAD SPEED _____ RPM
FULL LOAD CURRENT _____ AMPS
LOCKED ROTOR CURRENT _____ AMPS
TOTAL MOTOR WT _____ LBS
SPACE HEATERS (IF FURNISHED)
NUMBER OF UNITS _____
UNIT RATING, WATTS _____

TEMP. RISE _____ C BY RESISTANCE
AT SERVICE FACTOR OF 1.0 _____ ; 1.15 _____ .

SOUND LEVELS:
SOUND POWER LEVEL
RE 10^{-12} WATTS _____ dBA
FREE FIELD

INFORMATION REQUIRED FOR ALL MOTORS 200 HP AND LESS

SOUND LEVELS:
OVERALL MEAN SOUND PRESSURE LEVEL
RE 0.0002 DYNES/CM^2 REFERENCE DISTANCE
OF 3 FEET _____ dBA FREE FIELD

INFORMATION REQUIRED FOR MOTORS LARGER THAN 200 HP

EFFICIENCY, PER CENT
LOAD: 1/2 ____ 3/4 ____ 4/4 ____
POWER FACTOR, PER CENT
LOAD: 1/2 ____ 3/4 ____ 4/4 ____

MINIMUM STARTING VOLTAGE IN
PER CENT OF FULL VOLTAGE:
CALCULATED: _____
SPECIFIED: _____

OUTLINE DWG. NO. _____
ALLOWABLE STARTS _____
ACCELERATING TIME:
AT FULL VOLTAGE _____ SEC.
AT STARTING VOLTAGE _____ SEC.
LOCKED ROTOR PF _____ PER CENT
LOCKED ROTOR TORQUE _____ FT-LB
PULL UP TORQUE _____ FT-LB
BREAKDOWN TORQUE _____ FT-LB
TOTAL ROTOR WT _____ LBS
ROTOR INERTIA _____ LB-FT^2
OPEN CIR. TIME CONS'T. _____ SEC.
LOCKED ROTOR SAFE STALLED TIME:
AT FULL VOLTAGE _____ SEC.
AT STARTING VOLTAGE _____ SEC.
FOR VERTICAL MOTORS: REED FREQUENCY _____ CPS

SOUND LEVELS:
OVERALL MEAN SOUND PRESSURE LEVEL
RE 0.0002 DYNES/CM^2 AT 5 FEET _____ dBA
FREE FIELD

OCTAVE BAND MEAN SOUND PRESSURE LEVEL
RE 0.0002 DYNES/CM^2 REFERENCE DISTANCE
OF 5 FEET

FREQUENCY RANGE, CPS	LEVEL, dBC
90-180	_____
180-355	_____
355-710	_____
710-1400	_____
1400-2800	_____
2800-5600	_____
5600-11200	_____

FOR MOTORS FOR WHICH DIFFERENTIAL
PROTECTION IS SPECIFIED:
STATOR CONN: WYE _____
DELTA _____

FOR HORIZONTAL MOTORS RATED 1000 HP AND LARGER AT 3000 RPM AND FOR ALL MOTORS RATED 3500 HP AND LARGER AT ALL SPEEDS:

CRITICAL SPEEDS: FIRST CRITICAL _____ RPM
SECOND CRITICAL _____ RPM

BLACK & VEATCH INTERNATIONAL
CONSULTING ENGINEERS
KANSAS CITY, MO.

MOTOR
INFORMATION SHEET

NAME
OF
EQUIPMENT

PERUSAHAAN
UMUM LISTRIK
NEGARA

SEMARANG
STEAM POWER
PLANT

UNITS
1 & 2

VOLUME
NUMBER*

(Backbone)

PERUSAHAAN UMUM LISTRIK NEGARA
AGENCY OF MINISTRY OF PUBLIC WORKS AND POWER
GOVERNMENT OF REPUBLIC OF INDONESIA
JAKARTA, INDONESIA

SEMARANG STEAM POWER PLANT
100 MW (2 x 50 MW) UNITS 1 & 2

INSTRUCTION BOOK

FOR

NAME OF EQUIPMENT

VOLUME NUMBER*

MANUFACTURER'S NAME
MANUFACTURER'S ADDRESS

AID LOAN 497-H-024

BLACK & VEATCH INTERNATIONAL
CONSULTING ENGINEERS
KANSAS CITY, MISSOURI, U.S.A.

(Cover)

NOTE:

Cover Type: Large - 36 point Alternate Gothic #2
Medium - 16 point Futura Medium
Small - 12 point Futura Medium

Backbone Type: All same point size of Alternate Gothic #2 (Either 10 point, 12 point or 14 point) as backbone width allows.

* Stamp cover with volume number if instructions are contained in more than one volume

TYPICAL EQUIPMENT INSTRUCTION BOOK COVER

BLACK & VEATCH INTERNATIONAL CONSULTING ENGINEERS KANSAS CITY, MO., U.S.A.	PERUSAHAAN UMUM LISTRIK NEGARA SEMARANG STEAM POWER PLANT UNITS 1 & 2	A6104-0[illegible]

Section 1D - ELECTRIC MOTORS

1D.1 GENERAL. These motor specifications are applicable to all electric motors required for the operation of the equipment furnished. Motor Specification and Data Sheets for the integral horsepower motors required have been included in the equipment articles as required. Any motors not specifically covered, but still required for operation of the equipment, shall be furnished. The Contractor shall list and include as part of the Proposal the additional motors being furnished, and they shall be in accordance with these specifications.

Subsection 1D1 - INTEGRAL HORSEPOWER AC MOTORS

1D1.1 GENERAL. These motor specifications are applicable to all integral horsepower ac electric motors required for the operation of the equipment furnished. Motor Specification and Data Sheets for the motors required have been included in the equipment articles as required.

The requirements of the individual Motor Specification and Data Sheets shall govern where conflicts occur.

1D1.2 CODES AND STANDARDS. All motors shall be designed and fabricated to conform to the requirements of applicable ANSI, IEEE, and NEMA standards.

1D1.3 RATING. Unless otherwise stated in the technical sections or on the Motor Specification and Data Sheets, all integral horsepower motors shall be designed for operation on 380 volts, 3 phase, 50 hertz or 4000 volts, 3 phase, 50 hertz.

Motors shall be designed for full voltage starting, frequent starting where required, and shall be suitable for continuous duty in the specified ambient. Intermittent duty motors may be furnished where recognized and defined as standard by the equipment standards and codes. Motors shall be sized for the altitude at which the equipment will be installed.

The motor rated horsepower at 1.0 service factor shall not be less than the brake horsepower required to drive the furnished equipment at the maximum design point of the equipment. Motors shall be sized so that, under maximum load conditions imposed by the driven equipment, the motor has an additional continuous rated overload capacity of not less than 15 per cent. Motors with a service factor of 1.15 may be applied up to full nameplate horsepower rating. Motors with a service factor of 1.00 may be applied up to 87 per cent of full nameplate rating.

1D1.4 NAMEPLATE DATA. All motor nameplate data shall conform to NEMA MG 1 requirements. The following additional nameplate data shall be included:

Manufacturer's identification number
Frame size number
Insulation system class designation
Service factor
Locked-rotor kVA code letter
Starting limitations, if any
Direction of rotation and voltage sequence as specified later

1D1.5 DESIGN AND CONSTRUCTION. Design and construction of each motor shall be coordinated with the requirements of the driven equipment and as designated on the Motor Specification and Data Sheets.

1D1.5.1 Service Factor. For all motors 200 horsepower or less furnished with a service factor greater than 1.0, the service factor shall be in accordance with NEMA MG 1-12.47.

For all motors rated above 200 horsepower furnished with a service factor greater than 1.0, the motor nameplate shall show the horsepower rating at 1.0 service factor, and the service factor. The motor shall be designed to provide a continuous horsepower capacity equal to the rated horsepower at 1.0 service factor multiplied by the specified motor service factor without exceeding the total limiting temperature rise stated in these specifications for the insulation system and enclosure specified.

1D1.5.2 Enclosures. All motors shall be self-cooled.

The stator and rotor air gap surfaces of all motors shall be protected with a corrosive resistant alkyd enamel or with polyester or epoxy paint or coating.

Motors for outdoor service shall have all exposed metal surfaces protected, where practical, with a corrosion resistant polyester or epoxy paint or coating. Exposed unpainted and uncoated metal surfaces shall be of a corrosion resistant material.

All self-ventilated open type motors, including those with dripproof, splashproof, and weather-protected enclosures, and the fan hoods of totally enclosed fan cooled motors shall meet NEMA MG 1 requirements for a fully guarded machine.

Totally enclosed motors shall be furnished with drain plugs, and with cast iron frames, bearing brackets, and terminal housings. Fan cooled motors shall have fans fabricated of corrosion resistant metal and cast iron fan covers. Drain plugs shall be Crouse-Hinds Type ECD "Universal" combination water drain-breather type or acceptable equal. Rotating shaft seal is preferred on shaft extension end of motor.

In addition to the foregoing requirements for outdoor service motors, totally enclosed NEMA waterproof motors shall have enclosure interior surfaces protected with a corrosion resistant alkyd enamel or with polyester or epoxy paint or coating. Bolts, nuts, screws, and other hardware items shall be corrosion resistant material or heavy cadmium plated. A rotating labyrinth shaft seal shall be furnished on the shaft extension end of the motor.

All motor nameplates and attachment pins shall be corrosion resistant material.

1D1.5.3 Insulation. All insulated windings shall have nonhygroscopic Class B, sealed insulation system rated for temperature rise and ambient temperature in accordance with NEMA MG 1 standards for the insulation class specified except for motors having a service factor greater than 1.0. The observable temperature rise measured by resistance for motors having a service factor greater than 1.0 shall not exceed 80 C when operating at service factor load.

When ambient temperatures greater than 40 C are specified, the observable temperature rise shall be reduced in accordance with NEMA MG 1 standards.

For the sealed insulation system specified, two additional dips and bakes of epoxy varnish or vacuum-pressure impregnation shall be included to provide a premium insulation for random windings. Sealed insulation for formed coil windings shall be in accordance with the requirements of NEMA MG 1 standards.

The insulation resistance corrected to 40 C shall be not less than motor rated kV+1 megohms for all windings.

An insulation resistance-time curve corrected to 40 C for determining the polarization index for windings of motors rated above 600 volts with formed-coil stators shall be taken immediately prior to making the final high potential ground test. Each stator phase shall be tested separately to ground with other phases grounded. Motors shall be tested at 5000 volts dc. The ambient temperature, winding temperature, and relative humidity values shall be included with the recorded data. The polarization index shall not be less than 3.0.

1D1.5.4 Space Heaters. All motors furnished in NEMA 180 frame series or larger shall have 240 volt, single phase, 50 hertz space heaters. Space heaters shall be provided inside the motor enclosure in a location suitable for easy removal and replacement. Space heaters shall be of the capacity required to maintain the motor internal temperature above the dew point when the motor is idle. They shall be isolated by a heat insulation barrier or located so as not to cause heat damage to adjacent painted surfaces nor cause thermal protective device "over temperature" indication when the motor is not energized. Space heater leads shall be 600 volt stranded copper cable and shall include terminal connectors.

1D1.5.5 Terminal Housings. A single terminal housing for motor power leads and accessory leads shall be furnished on all motors rated 600 volts and less. A terminal housing for power leads and a separate accessory terminal housing for accessory leads shall be furnished on motors rated above 600 volts. When embedded temperature detectors are included in the specified

accessories, an additional terminal housing shall be provided for detector leads. Leads insulated for different voltage classes shall not occupy or terminate in the same housing under any conditions.

Terminal housings shall be cast iron, pressed steel, or fabricated steel. Housing shall be diagonally split with a gasket between the diagonally split halves of the housing. Each housing shall have a threaded opening to provide a watertight rigid connection with the conduit and shall be designed for rotation in 90 degree increments, or provisions included otherwise, to receive conduit from any of four directions. A nonconducting motor lead positioner and gasket shall be furnished between the housing and the motor frame. All motor leads located in the housing shall have terminals and shall be permanently numbered for ease of identification.

Separate accessory terminal housings provided for current transformer leads, temperature detector leads, space heater leads, alarm device leads, speed switch leads, and other similar accessory equipment leads shall be complete with screw type terminal blocks General Electric Type EB-5 or acceptable equal for termination of such leads. Terminal blocks for current transformer leads shall be shorting type. Each terminal in the blocks shall be identified and marked for its respective leads. Accessory terminal housings shall be accessible from outside the motor.

Terminal housings shall be designed and constructed to permit motor removal after installation without disconnecting motor power and accessory lead raceways from the terminal housings.

All motor power lead terminal housings shall be at least one size larger than normally furnished as standard and, for motors rated above 600 volts, shall be arranged to permit the installation of stress cones within the housing. Surge capacitors and lightning arresters, when specified, shall be mounted at the motor terminals inside an oversized housing.

Location and dimensions of terminal housings for motors rated above 600 volts shall be subject to acceptance by the Engineer.

1D1.5.6 Leads. All leads including motor power leads, current transformer leads, space heater leads, and thermal device leads shall be wired into their respective terminal housing. All motor leads and their terminals shall be permanently marked in accordance with the requirements of NEMA MG 1, Part 2.

All motors rated 100 horsepower and larger, and all motors furnished with unidirectional blowers, shall have the direction of rotation marked by an arrow mounted visibly on the stator frame near the terminal housing or on the nameplate and the leads marked for phase sequence T1, T2, T3, to correspond to the direction of rotation and supply voltage sequence.

Space heater leads for motors rated 600 volts or less shall be wired into the motor power lead terminal housing, and space heater leads for motors rated over 600 volts shall be wired to the separate accessory terminal housing.

Leads for dual voltage rated motors shall be easily connected or reconnected in the terminal housing for operating voltage. Permanent instructions for making these connections shall be furnished inside the terminal housing or on the motor frame or nameplate.

Strap type leads shall have bolt holes arranged in accordance with NEMA SG 1.

1D1.5.7 Terminals. All cable type leads shall be provided with Burndy Type YA (long barrel) or equivalent compression type connectors.

1D1.5.8 Ground Connectors. Motors shall be furnished with a grounding connector attached to the motor frame inside the motor power lead terminal housing. The grounding connector may be a lug or terminal or other accept-
* able grounding connector. ~~The ground cable size will be given later.~~

See Page 1D1-5A

Motors rated higher than 600 volts shall have an additional grounding connector permanently attached to the motor frame on the same side of the motor as the motor power lead terminal housing. The grounding connector may be a corrosion resistant metal pad welded or brazed to motor frame with a threaded hole at its center, a terminal connector attached to the motor frame, or other acceptable motor frame grounding method. The grounding point shall be on or near the end of the motor opposite the output shaft of horizontal motors and on or near the base of vertical motors.

1D1.5.9 Bearings. Motors furnished in NEMA 360 frame series and larger shall be provided with oil lubricated sleeve bearings. Motors furnished in smaller frame sizes shall be provided with grease lubricated, rolling element, self-lubricated, regreaseable type bearings.

Grease or oil lubricated rolling element thrust and radial bearings shall be designed and fabricated in accordance with AFBMA standards to have a minimum L-10 life rating of not less than 130,000 hours under the load, speed, and thrust requirements for direct coupled service and not less than 42,500 hours for belt or chain connected service. Grease lubricated radial bearings shall be double-shielded.

Sleeve bearings shall be oil-ring lubricated type with mountings provided with oil level sight glasses marked for required oil level at motor running and motor standstill. The oil ring shall be one-piece construction; split type construction will not be acceptable. Stationary labyrinth seals shall be bronze material.

*Revised in accordance with Addendum 1, Item 38

Sleeve bearings, end bells, and bearing housings for horizontal motors shall be split type when available for the frame and enclosure specified. Air gap measurement holes or other acceptable means shall be provided in each motor end enclosure for checking air gap of sleeve bearing motors.

Sleeve bearings on horizontal motors shall be designed and located centrally with respect to running magnetic center to prevent the rotor axial thrust from being continuously applied against either end of the bearing. The motors shall be capable of withstanding without damage the axial thrusts that are developed when the motor is energized.

Insulation shall be provided to prevent circulation of shaft current on sleeve and plate type bearings, on oil piping connections for external bearing lubrication systems and, when required, on rolling element bearings.

Bearings and bearing housings shall be designed to permit disassembly in the field for inspection of bearings or removal of rotor.

Thrust bearings for vertical motors shall be capable of operating for extended periods of time at any of the thrust loadings imposed by the specific piece of driven equipment during starting and normal operation without damage to the bearing, the motor frame, or other motor parts.

Stacked rolling element bearings will not be acceptable except as vertical thrust bearings in frame sizes up through NEMA 360 Series open type enclosures and up through NEMA 680 Series totally enclosed type enclosures. Where stacked bearings are furnished, matched pair, ABEC Grade 3 precision tolerance bearings with flush ground sides shall be provided. Bearing seats on the shaft and the bearing in housing shall have accuracy equal to that of the bearing.

Motors furnished with spherical roller thrust bearings and deep groove radial guide bearings shall have the guide bearing locked to the shaft so that the guide bearing will take upward thrust and to assure that the thrust bearing is always loaded. If spring loading is furnished, the guide bearing shall not be preloaded during normal operation.

All mountings for bearings shall be designed to prevent the entrance of lubricant into the motor enclosure or dirt into the bearings, and shall be provided with pipes, drain plugs, and fittings arranged for safe, easy relubrication from the outside of the motor while the motor is in service.

Bearing lubrication shall be furnished by an internal lubrication system, unless specified otherwise on the Motor Specification and Data Sheets. When an external lubrication system is required it shall be furnished complete by the Contractor, including all required connections. Required connections shall be furnished for forced or recirculating lube oil as specified on the Motor Specification and Data Sheets.

The ground lug size shall be in accordance with the following tabulation:

Full Load Motor Amperes	Minimum Ground Lug Range - AWG
0 thru 21	12 thru 10
22 thru 40	10 thru 8
41 thru 65	8 thru 6
66 thru 156	6 thru 4
157 thru 240	4 thru 2
241 thru 400	2 thru 1/0"

The Contractor shall furnish all lubrication information required to assure proper equipment startup and subsequent bearing maintenance. Motors furnished with rolling element bearings shall have the AFBMA bearing identification number indicated on a nameplate attached to the motor frame.

1D1.5.10 Rotors. All induction motors shall have squirrel-cage rotors. Rotors shall be adequately sized to avoid overheating during acceleration of the motor and driven equipment. Rotors not of integral die cast construction shall be furnished with copper or copper alloy cage material.

All motor rotating components shall be dynamically balanced after mounting on the shaft. Motor vibration shall not exceed the peak-to-peak amplitude values given in NEMA MG 1 standards when measured in accordance with those standards. In addition, the magnitude of vibration values for twice the line frequency vibrations shall not exceed 0.5 mil.

For motors rated above 500 horsepower, the minimum clearance space required for removal of the rotor shall be indicated both in the Proposal and on the dimensional outline drawing.

1D1.5.11 Shafts. Where shipment permits, motor output shafts shall be complete with motor half coupling mounted, connected to the driven equipment, and adjusted ready for operation. Where motor size prevents shipment with motor connected to driven equipment, the motor half coupling shall be factory mounted for field connection to the driven equipment.

The output shaft of motors furnished with sleeve bearings shall be circumscribed with permanent marks indicating the motor magnetic center and end float limits when level and running at rated speed. A permanent, identified reference point shall be indicated or attached to the bearing housing or shaft seal. The markings shall be easily identifiable for use during motor installation.

Rotor end float and coupling end play for horizontal sleeve bearing motors shall be in accordance with NEMA MG 1-14.37 and -20.81. For each bearing, the difference between the magnetic center and the total end float shall not exceed ±12 per cent of the total end float when the motor is level and running at no-load with rated voltage and frequency applied. The minimum rotor end float in fractions of an inch and the maximum diameter in inches of the lathe center in the shaft extension shall be indicated on the motor dimensional outline drawing.

1D1.5.12 Torque Characteristics. The torque characteristics of all induction motors at 90 per cent rated voltage (except it shall be 80 per cent rated voltage for boiler feed pump motors) or at the starting conditions indicated on the Motor Specification and Data Sheets shall be as required to

accelerate to full speed the inertia loads of the motor and driven equipment without damage to the motor or the equipment. All motors shall be designed and fabricated to withstand the forces of across-the-line starting at 110 per cent rated voltage.

Unless specified otherwise, motors rated 200 horsepower and less shall have torques and locked-rotor current in accordance with NEMA MG 1, Part 12 for the specified design classification. For motors rated above 200 horsepower, the torques in per cent full-load torque at rated voltage and frequency shall not be less than 200 breakdown, 85 pull-up, and 100 starting. Locked-rotor kVA/hp at rated voltage and frequency shall not exceed 5.77 for motors rated above 200 through 500 horsepower and 5.59 for motors rated above 500 horsepower.

1D1.5.13 Critical Speeds. Motors shall be designed to keep torsional and rotational natural frequencies of vibration outside of the motor rated speed ranges to avoid resonant vibration over the operating speed range of the equipment-motor unit.

1D1.5.14 Externally Originating Vibration. Motors shall be capable of withstanding continuously, without damage, externally originating vibration transmitted through the motor shaft or the motor foundation equal in magnitude to the maximum internal motor vibration which is permitted by NEMA MG 1 standards for the motor alone.

1D1.5.15 Temperature Detectors. Bearing and winding temperature detectors shall be furnished and installed complete in accordance with the applicable requirements of ANSI C96.1 and IEEE 119 standards. Detectors shall be compatible with instrumentation requirements.

Thermocouple type temperature detectors shall be ungrounded dual element, ISA Type K chromel-alumel in accordance with Section 1B.

1D1.5.15.1 Bearing Temperature Detectors. Bearing detectors, complete with detector head and holder assemblies as required, shall be furnished on all motors with sleeve and Kingsbury type bearings. Detectors shall be furnished on motors with antifriction bearings when specified on the Motor Specification and Data Sheets. The detector temperature sensitive tip shall be hermetically sealed and held in intimate contact with the outside diameter of the bearing babbitt not over 1/16 inch from shaft surface of bearing babbitt on sleeve bearings and on the outer race or in close proximity to the bearing metal for antifriction bearings.

Thermocouple type detectors for bearings shall be insulated with magnesium oxide packed in a stainless steel protective sheath.

1D1.5.15.2 Winding Temperature Detectors. Winding temperature detectors shall be furnished, installed and wired complete when specified on the Motor Specification and Data Sheets. When embedded detectors are specified, a detector lead terminal housing shall be included mounted on the motor frame.

Detectors embedded between coils in the stator slots shall be evenly spaced around the stator and centrally located axially in the slot. Detectors embedded in the coil end-turns shall be evenly spaced around the stator and located out of the ventilating air stream.

Thermocouple type detectors shall be embedded in the coil end-turns of random-wound stators and embedded between the oils in the stator slots of form-wound stators. The number of thermocouples shall be as specified on the Motor Specification and Data Sheets. Thermocouple wire shall be solid 18 AWG or larger.

Temperature detector and detector lead insulation class shall be the same as the stator coil insulation class. Leads for detectors furnished on motors rated above 600 volts shall be provided with a protective brass interlocked spiral armor and terminated on a terminal block.

All temperature detectors shall be tested at 1500 volts to ground and checked for accuracy just before the final winding dielectric tests are taken. Accuracy shall be checked by measurement of the detector resistance or by checking the temperature reading obtained with a temperature detector meter when the windings are at room temperature.

1D1.5.16 Motor Differential Protection. All 3 phase motors rated over 600 volts which are 1500 horsepower and larger shall be furnished with three relaying accuracy current transformers. Current transformers shall be provided with stranded cable type leads and shall be removable without disassembly of the motor. Current transformer ratios will be determined later by the Engineer. Motors shall be furnished with six leads and with a connection plate showing lead terminal connection for operating voltage mounted on the inside surface of the terminal housing cover. The type of connection, wye or delta, shall be stated in the Proposal Data.

1D1.5.17 Noise Level. The average no-load overall sound pressure level re 0.0002 dynes/cm^2 shall not exceed 90 dBA measured 3 feet from major machine surfaces for motors furnished in NEMA 440 series frame sizes and smaller. The sound level for motors furnished in frame sizes larger than NEMA 440 series shall not exceed 90 dBA measured 5 feet from major machine surfaces. Sound pressure levels shall be determined from 5-position readings.

Octave band sound pressure level values re 0.0002 dynes/cm^2 dBC shall be included on each Motor Information Sheet.

In addition to conformance with the specified noise level, single frequency air-borne windage noise shall not exceed levels which can produce damage to the human ear.

Noise level measurements shall be in accordance with the requirements of IEEE No. 85 Test Procedures.

Sound reduction baffles, mufflers, and materials shall be contained within the motor enclosure except external fan mufflers may be furnished for totally enclosed fan cooled motors.

1D1.6 FACTORY TESTS AND INSPECTION. Each motor shall be tested and inspected at the manufacturer's factory to determine that it is free from electrical or mechanical defects and to provide assurance that it meets the requirements of these specifications. Test procedures shall be in accordance with IEEE No. 112A Test Procedure for Polyphase Induction Motors and Generators.

1D1.6.1 Routine Tests and Inspection. The standard routine tests and inspections shall be made on each motor. These shall include the following:

No-load running current at normal voltage
Locked-rotor current at fractional voltage
Measurement of winding resistance for motors rated 100 hp and larger
Dielectric test
Inspection of bearings and bearing lubrication system

Five copies of reports of the routine test for each motor shall be included with the dimensional outline drawings submitted to the Engineer. For motors rated above 100 horsepower, the test reports shall be submitted to the Engineer prior to shipment of the motor from the manufacturer's factory.

In each case where the motor design furnished is an electrical duplicate of one which has been manufactured and completely tested to determine performance characteristics, five copies of reports covering the results of the performance tests for the design, including a speed-torque-current curve, shall be provided in addition to the routine test specified. Electrical duplicate design includes those designs which are considered a "ratio-of-voltage" to the specified voltage.

1D1.6.2 Additional Test Report Data for Large Motors. For motors rated above 500 horsepower, test report data shall include the following in addition to other requirements of these specifications:

Final value of motor axial and radial vibration
Length of time and final temperature rise of bearing test

A statement that bearings have been inspected and accepted for shipment

Insulation resistance-time curve and polarization index for motors with formed-coil stators

Final value of motor noise level including statement that there is no objectionable discrete frequency windage noise

Where complete tests have been taken previously on a duplicate motor, the report of the routine tests shall include a statement that the complete tests affirm the performance values, including temperature rise, as given in the Proposal Data and on the Motor Information Sheets.

Where complete tests have not been taken previously on a duplicate motor, the Owner reserves the right to specify that complete tests be taken.

1D1.7 MOTOR SPECIFICATION AND DATA SHEETS. The Motor Specification and Data Sheets specify the major construction requirements for each motor. After award of contract, in accordance with the schedule specified in Section 1C, the Contractor shall complete and submit copies of the Motor Information Sheets for each motor rating furnished with all motor data filled in. A sample Motor Information Sheet is included at the end of Section 1C.

1D1.8 DRAWINGS AND ENGINEERING DATA. Motor dimensional drawings shall be furnished for all 4000 volt motors. The drawings shall include the following information in addition to the requirements listed hereinbefore and in Section 1C:

For all motors:

Rotor weight and motor total weight

Clearance to remove rotor from stator, for motors rated above 500 horsepower

For horizontal sleeve bearing motors:

The limits of travel for rotor end play from the bearing end float center positon

Special requirements, if any, for provision by others for control of shaft end float during starting, operating or stopping of the motor

Output shaft end location with rotor indicated in the bearing end float center position for motors rated above 500 horsepower

The maximum expected dimensional shift in rotor location between the actual operating magnetic center position and the bearing end float center position for motors rated above 500 horsepower

Output shaft center line rise due to motor expansion in normal operation from idle cold to continuous full load condition for motors rated above 500 horsepower

1D1.9 MANUFACTURERS. Motors shall be as manufactured by one or more of the following:

Allis-Chalmers
Century (380 volt motors only)
Electric Machinery
General Electric
Reliance (380 volt motors only)
U.S. Motors (380 volt motors only)
Westinghouse

Subsection 1D2 - FRACTIONAL HORSEPOWER AC MOTORS

1D2.1 GENERAL. These specifications supplement the integral horsepower ac motor section and cover all general, special, and definite purpose fractional horsepower motors provided in NEMA 2-digit frames. Motors provided under these specifications including gearmotors and those constructed integrally with the driven equipment shall be the manufacturer's proven design standard furnished completely assembled, lubricated, and ready for operation.

The requirements of the individual technical sections shall govern where conflicts occur.

1D2.2 CODES AND STANDARDS. In addition to the requirements of the integral horsepower ac motor section, all motors shall be selected for installation and use for the equipment duty service in accordance with NEMA MG 1 and MG 2 requirements.

1D2.3 RATING. Motor rating, service factor and nameplate data shall conform to the requirements of NEMA MG 1 standards. Motors shall be designed for full voltage starting, frequent starting where required, and shall be suitable for continuous duty in the specified ambient. Intermittent duty motors may be furnished where recognized and defined as standard by the equipment standards and codes.

Motor nameplate horsepower ratings shall not be exceeded when the equipment is operating within the limits of the design conditions specified. The motor loading shall not exceed the motor service factor rating under starting conditions or at the equipment maximum load point.

All motor torque characteristics shall conform to the requirements specified in the integral horsepower ac motor section.

Unless specified otherwise in the individual technical sections, all ac motors shall be designed for operation on 380 volts, 3 phase, 50 hertz for motors 3/4 horsepower and larger, and 230 volts, single phase, 50 hertz for motors less than 3/4 horsepower.

1D2.4 DESIGN AND CONSTRUCTION. Type, design, and construction of each motor shall be coordinated with the driven equipment requirements as specified in the individual technical sections.

1D2.4.1 Shafts. Shafts shall be furnished with corrosion resistant treatment unless a corrosion resistant material is specified.

1D2.4.2 Insulation. All motors shall have Class B insulation in accordance with the requirements of the integral horsepower section except temperature rise shall be in accordance with NEMA MG 1 standards.

1D2.4.3 Terminals and Leads. Terminal and lead details including identification, dimensions and locations of terminal housings, terminal boards, combination spade, screw, or stud terminals, and terminal spacing shall be in accordance with NEMA MG 1 and MG 2 standards. Where supplied, terminal boards shall be fabricated of nonhygroscopic material. When dual voltage rated motors are furnished as standard, the leads shall be easily connected or reconnected in the terminal housing for either operating voltage. Permanent instructions for making these connections shall be furnished inside the terminal housing or on the motor frame or nameplate.

1D2.4.4 Ground Connectors. All motors, including those with resilient mountings, shall be furnished with a common ground connection in accordance with NEMA MG 2-2.06. A ground connector shall be provided inside the motor terminal housing for 12 AWG grounding cable.

1D2.4.5 Rotors. All motor rotors shall be designed adequately sized to avoid overheating during acceleration of the motor and driven equipment. Rotors shall be keyed or otherwise securely mounted on the motor shaft and shall be dynamically balanced. Starting switches, where required, shall be designed to provide quiet, positive action at the proper opening and closing speed.

1D2.4.6 Bearings. Bearings for fractional horsepower motors shall be designed to operate in any position or angle. One-piece sleeve bearings with wick lubrication shall be furnished where available. Ball bearings shall be furnished where sleeve bearings are not available and where axial thrust loads exceed 20 pounds.

1D2.4.7 Capacitors. Capacitors, where required, shall be furnished in removable metal enclosures mounted on the motor frames. Lock washers shall be furnished under the capacitor enclosure holddown screws.

1D2.4.8 Thermal Protection. Manual reset automatic thermal protection, for both stalled rotor and overload protection, shall be furnished on all motors where available unless specified otherwise in the individual technical sections.

1D2.5 TESTS. Routine tests in accordance with NEMA MG 1 requirements shall be performed on each motor at the factory to determine that there are no electrical or mechanical defects.

1D2.6 MANUFACTURER. The motor manufacturer shall be as selected by the Contractor.

PART 2 - TECHNICAL REQUIREMENTS

TABLE OF CONTENTS

		Page
Section 2A - BOILER FEED PUMPS		2A-1 thru 2A-10
2A.1	General	2A-1
2A.2	Code Requirements	2A-1
2A.3	Type	2A-1
2A.4	Arrangement	2A-1
2A.5	Design Conditions	2A-1
2A.6	Operational Requirements	2A-2
2A.7	Characteristic Curves	2A-2
2A.8	Sound Level	2A-2
2A.9	Guarantees	2A-3
2A.10	Shop Tests	2A-3
2A.11	Pump Construction	2A-4
2A.12	Accessories	2A-7
2A.13	Motors	2A-8
2A.14	Spare Parts	2A-9
Motor Specification and Data Sheet		2A-10
* Section 2B - MISCELLANEOUS WATER PUMPS		2B-1 thru 2B-23
2B.1	General	2B-1
2B.2	Code Requirements	2B-1
2B.3	Specification and Data Sheets	2B-1
2B.4	Pump Types	2B-1
2B.5	Arrangement	2B-2
2B.6	Materials	2B-2
2B.7	Characteristic Curves	2B-3
2B.8	Guarantees	2B-3
2B.9	Tests	2B-4
2B.10	Pump Construction	2B-4
2B.11	Motors	2B-5
2B.12	Accessories for Fire Pump	2B-5
2B.13	Internal Combustion Engine	2B-5
General Service Centrifugal Pump Specification Sheet		2B-7
Motor Specification and Data Sheet		2B-8
General Service Centrifugal Pump Specification Sheet		2B-9
General Service Centrifugal Pump Specification Sheet		2B-10
Motor Specification and Data Sheet		2B-11
General Service Centrifugal Pump Specification Sheet		2B-12
Motor Specification and Data Sheet		2B-13
General Service Centrifugal Pump Specification Sheet		2B-14
Motor Specification and Data Sheet		2B-15
General Service Centrifugal Pump Specification Sheet		2B-16
Motor Specification and Data Sheet		2B-17

Included

*Not/in Contract

(PLN - 6104)

(AUXILIARY PUMPS - M-26A)

102373

	Page
General Service Centrifugal Pump Specification Sheet	28-18
Motor Specification and Data Sheet	28-19
General Service Centrifugal Pump Specification Sheet	28-20
Motor Specification and Data Sheet	28-21
General Service Centrifugal Pump Specification Sheet	28-22
Motor Specification and Data Sheet	28-23
* Section 2C - OIL PUMPS	2C-1 thru 2C-9
2C.1 General	2C-1
2C.2 Code Requirements	2C-1
2C.3 Specification Sheets	2C-1
2C.4 Characteristic Curves	2C-1
2C.5 Pump Types	2C-1
2C.6 Guarantees	2C-1
2C.7 Tests	2C-1
2C.8 Pump Construction	2C-2
2C.9 Pump Accessories	2C-2
2C.10 Motors	2C-3
Rotary Pump Specification Sheet	2C-3
Motor Specification and Data Sheet	2C-[illegible]
Rotary Pump Specification Sheet	2C-5
Motor Specification and Data Sheet	2C-6
Rotary Pump Specification Sheet	2C-7
Motor Specification and Data Sheet	2C-8
	2C-9

Included
*Not /in Contract

(PLN - 6104)
(AUXILIARY PUMPS - M-26A)
102373

Section 2A - BOILER FEED PUMPS

2A.1 GENERAL. This section covers the design and performance requirements for the boiler feed pumps.

2A.2 CODE REQUIREMENTS. All equipment and materials furnished under these specifications shall be designed and constructed in accordance with the Hydraulic Institute Standards, the latest applicable requirements of the standard specifications and codes of ANSI, ASME, ASTM, NEMA, IEEE, EEI, AGMA, and other such regular published and accepted standards, except where modified or supplemented by these specifications.

2A.3 TYPE. The pumps shall be of the horizontally split case, multistage, centrifugal type designed for continuous operation in boiler feed service.

* ~~The pumps shall be furnished complete with electric drive motors. Pumps and speed reducers shall be mounted on full length base plates and shall be connected by a flexible shaft coupling.~~

Pumps shall be furnished with suction strainers, recirculation and warmup orifices, and other accessories as specified herein.

2A.4 ARRANGEMENT. The arrangement of pump openings and direction of rotation shall be at the option of the Owner as long as special designs and new patterns are not required. Optional arrangements shall be submitted.

2A.5 DESIGN CONDITIONS. The boiler feed pumps shall be designed for continuous operation under the following conditions. The performance indicated shall be for each pump.

Capacity, each pump, gpm @ 325 F	1160
** Suction conditions at design suction flow	
Pressure above shaft center line, max psi	114
Temperature, F, design	325
Temperature, F, maximum	340
Available NPSH above pump shaft, ft*	31

The pumps shall be furnished complete with electric drive motors and separately mounted geared speed increaser if required. Pumps, speed increasers, and drive motors shall be mounted on full length base plates and shall be connected by flexible shaft couplings.

*The available NPSH stated above does not include any margin or contingency allowance. Pump NPSH requirements shall be held to a minimum.

*Revised in accordance with Addendum 1, Item 39
**Revised in accordance with Addendum 1, Item 40

*	Total head, design point at the design suction temperature, ft	~~4950~~ 4250
*	Maximum rotative speed, rpm	~~3000~~ 4500
	Cooling water supply temperature, F	95
	Cooling water supply pressure, psi max	125
	Allowable cooling water pressure drop, psi max	4

2A.6 OPERATIONAL REQUIREMENTS. Pumping capacity will be regulated by throttling the pump discharges across feedwater regulators. The pumps shall be designed for continuous operation in boiler feedwater service. They shall be suitable for operation in parallel pairs at all loads.

The pumps shall be specifically designed for pumping water ranging from 55 F to the temperature specified under DESIGN CONDITIONS without setting up destructive temperature strains causing warping, buckling, misalignment, rubbing, or other objectionable effects. Adequate clearances shall be provided in the pump to accomodate shaft deflections and loss of suction head. Reliability during all operational conditions is a major consideration and the apparent long term reliability of the pump will be investigated in the Engineer's review of the proposals.

Each pump shall be designed to have a head-capacity characteristic which rises steadily from the rated capacity to shutoff. At shutoff the pump head shall be not less than 110 per cent nor greater than 130 per cent of the head at the rated capacity.

2A.7 CHARACTERISTIC CURVES. A pump curve sheet indicating head, efficiency, horsepower, and required NPSH, all at a constant speed plotted against capacity, shall be furnished with the Proposal. Characteristics of the maximum and minimum diameter impellors which may be used in the casing shall also be indicated. Certified pump curves shall be sent to the Engineer for acceptance as specified in Section 1C of these specifications.

2A.8 SOUND LEVEL. The equivalent "A" weighted sound pressure level of the equipment furnished, measured at 5 feet elevation above floor level and 3 feet horizontally from the base of the equipment, expressed in decibel

*Revised in accordance with Addendum 1, Item 41

reference 0.0002 microbars shall not exceed 90 dBA. Details of the methods to be used to reduce the sound level shall be submitted.

2A.9 GUARANTEES. The pumps shall be guaranteed to perform as specified, as indicated by the performance curves, and stated in the Proposal. They shall be guaranteed to operate without pitting, cavitation, excessive vibration, or noise under all conditions. The following shall be guaranteed:

a. Volumetric capacity at design point head and speed

b. Total head at the design point

c. Maximum NPSH required at the design point with the specified suction temperature

d. Efficiency

e. Horsepower input at design point corrected to specified pumping temperature

f. Quantity of water to be recirculated under shutoff conditions to prevent pump overheating

g. Maximum shutoff head

h. Sound levels as specified herein under SOUND LEVEL

2A.10 SHOP TESTS. The pumping equipment furnished under these specifications shall be shop tested by, and at the expense of, the Contractor for capacity, power requirement, and efficiency, at each of not less than four different heads including rated head, normal operating range limits, and at minimum recommended flow.

Six certified copies of curves resulting from each test shall be submitted to the Engineer for acceptance before shipment of the equipment is made. These curves shall indicate the actual test pressure and temperature conditions and the observed test points.

If the pump suction conditions (pressure and/or temperature) differ from the conditions listed under DESIGN CONDITIONS, appropriate correction factors shall be applied to the observed test curve and a corrected curve shall be indicated. This curve shall then represent the expected pump performance under the DESIGN CONDITIONS based on the shop test data.

After installation of the equipment, a test may be made at the option of the Owner to check the pump characteristic curves when operating under the DESIGN CONDITIONS.

If the difference between the proposal curves or actual field performance and the expected pump performance indicated on the certified pump curves is, in the opinion of the Engineer or Owner, too great, the Contractor shall modify the pump as required. All modifications and subsequent tests shall be made at the expense of the Contractor.

2A.11 PUMP CONSTRUCTION. Pumps shall be constructed in accordance with the requirements stated in the following articles.

2A.11.1 Materials. Pump materials shall be equivalent to, or shall exceed, the strength and corrosion-erosion resistance of the following listed materials:

Casing	Cast alloy steel ASTM A217 Gr C5
Shaft	13 per cent chromium alloy steel, ASTM A276 Type 410 HT or K-Monel
Impellers	Cast alloy steel ASTM A217 Gr C5
Wearing rings	13 per cent chromium alloy steel, ASTM A276 Type 410 HT
Shaft sleeves	12 per cent chromium alloy steel, ASTM A362 Gr CA-15 HT or chromium plated steel. 550 Brinell
Warmup and recirculation orifices	Stainless steel, AISI Type 416 or 410

2A.11.2 Casing. The pump casing shall be horizontal center line supported and shall be split horizontally and so arranged that the top half may be removed without disconnecting the suction or discharge piping.

The suction and discharge nozzles shall be flanged connections.

2A.11.3 Impellers and Wearing Rings. All impellers shall be of the enclosed type, of one-piece cast construction, carefully machine finished.

The impellers shall be individually, dynamically balanced.

Renewable casing wearing rings designed for ease of replacement shall be furnished to prevent excessive leakage between pressure stages. They shall be designed to maintain high pump efficiency and for ease of replacement.

The pump shall be arranged with opposed impellers and/or balancing drum so that hydraulic thrusts are in balance throughout the operating range.

2A.11.4 Shaft. The pump shall be provided with a shaft of sufficient size to transmit the power requirements of the pump. Pump shafts shall be machined and ground to close tolerances. Shaft ends shall be tapered to permit easy installation of the mechanical seal and to receive the coupling half.

The shaft shall be of sufficient rigidity and dynamically balanced. Bearing spans shall be kept to the minimum practicable.

2A.11.5 Shaft Seals. Mechanical type shaft seals shall be furnished. Each pump shall be provided with an external seal water heat exchanger designed for the maximum suction conditions. The seal water heat exchanger shall be supported from and within the limits of the base plate. All pipe and fittings required between the heat exchangers and the pumps shall be furnished and shall be constructed of carbon steel.

2A.11.6 Bearings and Lubrication. Radial bearings shall be of the split sleeve babbitt lined type. A Kingsbury type thrust bearing shall be provided to carry unbalanced end thrust in either direction.

Each pump shall be provided with a separate forced feed oil lubrication system. The system shall provide a continuous flow of cooled oil to the pump thrust bearing and radial bearings and shall have sufficient capacity
* to furnish oil to all radial bearings in the drive motor and to furnish oil to the speed increaser. The system shall include a positive displacement shaft driven oil pump, an oil cooler, an oil filter, an oil reservoir, pressure switches, valves and all interconnecting piping.
* Piping for motor bearing oil supply and discharge and for the speed increaser supply and discharge shall be provided. All equipment shall be located within the confines of the pump base plate. Interconnecting piping shall be welded where possible. All piping shall be within the pump base plate, support or lagging.

Heat exchangers shall be suitable for the cooling water supply specified under DESIGN CONDITIONS. Heat exchangers shall be of stainless steel construction.

The oil reservoir shall be coated internally with "Rustban".

*Revised in accordance with Addendum 1, Item 42

~~* If a separate motor-driven auxiliary oil pump is required to assure adequate lubrication of all bearings during normal startup, during normal shutdowns, during emergency shutdowns after failure of the shaft driven oil pump, or during any other operating situations, except continuous operation after failure of the shaft driven oil pump, then a motor-driven auxiliary oil pump shall be provided with the lubrication system.~~

A minimum of three pressure switches shall be furnished for starting and stopping the auxiliary oil pump, if furnished, and for alarming low oil pressure. The pressure switches shall be furnished with single pole double throw contacts.

The auxiliary oil pump, if furnished, shall be provided with a motor driver suitable for across-the-line starting and conforming in all respects to the requirements of Section 1D.

2A.11.7 Balancing Leakoff. Balancing leakoff flow will be piped under separate specifications to the deaerator or pump suction as recommended by the manufacturer. An orifice shall be furnished for installation in the balancing leakoff line to monitor the flow. The orifice shall be fabricated of Type 416 or Type 410 stainless steel and properly sized and calibrated to obtain accurate flow measurements.

2A.11.8 Piping. All piping systems for the pumps shall be shop fabricated and installed in a neat and workmanlike manner within the confines of the pump base plate. Fittings shall be used for all intersections and changes of direction. Piping runs shall be parallel to or perpendicular to the pump center lines. Socket weld fittings shall be used wherever possible. All piping shall be carbon steel, ASTM A106, Schedule 40 minimum.

Each pump shall be provided with all drain piping required to interconnect bracket drains and other points of drainage and convey them to a common outlet connection. Each bracket drain outlet shall be provided with a site flow fitting.

Each pump shall be provided with all required cooling water supply and discharge piping, including piping for oil coolers and pump cooling water connections. There shall be a single inlet connection and a single outlet cooling water connection for the pumping un .. Each individual supply line shall be provided with a gate valve and each individual discharge line with a sight flow indicator and a globe valve.

All piping and fittings required for the lubricating oil systems shall be furnished and installed. Steel body valves shall be used. All oil piping shall be provided with sufficient numbers of flanged joints to facilitate assembly.

If a separate motor driven auxiliary oil pump is required to assure adequate lubrication of all bearings during normal startup, during normal shutdowns, or during emergency shutdowns after failure of the shaft driven oil pump, then a motor driven auxiliary oil pump shall be provided with the lubrication system.

*Revised in accordance with Addendum 1, Item 43

Pump air bleed connections shall be valved and piped to the pump base drain.

2A.11.9 Insulation and Lagging. Each pump shall be provided with lagging to enclose the half of the pump above the pump support. The entire pump casing inside the box support and beneath the lagging shall be insulated.

The insulation shall consist of a minimum of 2 inches of asbestos free calcium silicate block insulation securely attached to the casing with dead soft Type 302 stainless steel wire threaded both ways through suitable lugs welded to the pump casing.

All insulation and lagging shall be arranged and installed to allow easy removal and replacement during maintenance, inspection, and repair, with a minimum disturbance to adjacent insulation and lagging. The insulation for the top half of the pump casing heads shall be attached to the lagging to permit removal as an assembly.

The lagging material shall be 14 gage carbon steel. Lagging joints shall be butt type with backup strips and countersunk screws. All corners of the lagging shall be rounded. The overall appearance and design of the lagging shall be subject to acceptance by the Engineer.

All insulation and lagging shall be shop installed.

2A.11.10 Forces and Moments. Full information on the allowable forces and moments which can be imposed on the equipment by plant piping shall be submitted.

2A.12 ACCESSORIES. The accessory equipment specified in the following articles shall be furnished.

2A.12.1 Recirculation Orifice. A stainless steel, multiple orifice type, pressure breakdown orifice shall be furnished for recirculation for each pump. The orifice shall be capable of passing sufficient flow to prevent overheating of the pump under shutoff conditions.

2A.12.2 Warmup Orifice. A stainless steel, multiple orifice type, pressure breakdown orifice shall be furnished for warmup of each boiler feed pump. This orifice will be used to provide a flow of feedwater through the pump for quick startup purposes.

2A.12.3 Shaft Couplings. The shaft coupling shall be in accordance with Section 1B of these specifications.

2A.12.4 Coupling Guards. Coupling guards shall be in accordance with Section 1B of these specifications.

2A.12.5 Temperature Detectors. Each radial bearing oil return, both faces of each thrust bearing, and the balancing leakoff line shall be equipped with temperature detectors. Bearings and bearing housings shall be drilled and tapped as required. Temperature detectors shall be in accordance with Section 1B of these specifications.

Temperature detectors as specified above, shall be furnished, and located to measure the water temperature rise across the pump.

2A.12.6 Suction Strainers. A stainless steel mesh, cone type strainer shall be furnished for installation between flanges in the suction piping of each pump. The design of the strainer shall be such that it will not impair the normal operation of the pump. The strainer shall be suitable for installation in the suction piping, the size of which will be determined later.

2A.12.7 Auxiliary Electrical Equipment. All auxiliary electrical equipment requiring external electrical connections, including pressure switches, temperature detectors, space heaters, limit switches, and auxiliary motor leads, shall be wired to terminal blocks installed in a common NEMA 12 junction box mounted on the pump base. All raceway and conduit between devices and the junction box shall be installed in a workmanlike manner within the confines of the pump base. Raceway interconnections shall be in accordance with Section 1B of these specifications. Wiring between devices and the junction box terminal blocks shall be in accordance with Section 1B of these specifications.

2A.12.8 Base Plate. The pumps shall be provided with a heavy cast iron or fabricated steel box type, full length base plate beneath the pump and motor. The base plates shall be in accordance with the requirements of Section 1B. Motor mounting provisions shall be subject to the acceptance of the motor manufacturer.

2A.12.9 Tools. All special tools and handling devices required for maintenance and assembly of the pump, including coupling removal tools and dismantling cradle for the pump, shall be furnished. Tools shall be new and unused.

2A.13 MOTORS. All motors furnished shall be in accordance with Section 1D of these specifications and the Motor Specification and Data Sheet at the end of this section.

2A.14 SPARE PARTS. In addition to the spare parts recommended in the bidder's proposal, the following spare parts shall be delivered with the boiler feed pumps and shall be included in the bid price for these pumps:

Wearing rings

Rotor

Shaft sleeves

Bearings

Shaft seals

Casing gasket

Shaft coupling

* 2A.15 SPEED INCREASERS. Speed increasers shall be as manufactured by DeLavel, General Electric, or Philadelphia Gear Works.

2A.15.1 Type. The speed increasers shall be of the double helical gear precision type designed for high speed operation, low noise level, and minimum power transmission losses. The speed increasers shall conform to the latest standards of the AGMA and shall have a minimum quality level of 14. The speed increasers shall be of the highest attainable reliability and shall not materially reduce the overall reliability of the pumping unit.

2A.15.2 Construction. Gears shall be of the herringbone (opposed helical) type of one piece forged or cast steel manufactured to close tolerances by hobbing and either shaving or hardening and grinding. Where possible, pinions shall be forged integral with the shaft.

For the face width, the lead of the pinion and gear shall be the same within 0.0003 inch. The lead tolerance shall be tested at zero torque by a rolling contact transfer test which shall demonstrate that 80 per cent of each helix is in contact. The apex runout of the gear set shall not exceed one mil. Durability and strength shall be rated in accordance with AGMA 421.06.

The gears and pinions shall be dynamically balanced after all machining operations are completed. During pumping unit tests, case vibration in the vicinity of the bearings shall not exceed one mil peak-to-peak at gear or pinion rotational frequency.

Bearings shall be high speed Babbitt metal split sleeve bearings. Provision shall be made in the bearings for resisting any thrust loads imposed by connected equipment. Bearings shall have locating pins to prevent rotation and insure proper location in the housing.

*Added in accordance with Addendum 1, Item 44

*The speed increaser housing shall be of cast iron or fabricated steel construction and shall be horizontally split to provide access to all bearings, shafts, and gearing.

The speed increaser shall be lubricated by a pressure spray system using oil supplied from the pump lubricating system. Shaft seals shall be of the labyrinth type, of nonsparking material, and shall be horizontally split to facilitate maintenance.

2A.16 ALTERNATE PUMP DESIGN. Bidders may submit a proposal for boiler feed pumps of the barrel type design in lieu of, or in addition to, a proposal for the split case pumps specified in the preceding paragraphs. The alternate barrel type pumps shall be in accordance with all applicable requirements stated herein for the split case pumps.

In lieu of the spare parts listed for the split case pumps, for the barrel type pumps, one spare inner case and rotating element shall be provided. The spare element shall be identical with the pumps proposed and shall be complete with shaft, shaft bushings, impellers, wearing rings, inner casing, shaft seals, and bearings.

*Added in accordance with Addendum 1, Item 44.

MOTOR BOILER FEED PUMP

ITEM I
SPEC M-26A
PROJECT 6104

MOTOR SPECIFICATIONS

TYPE INDUCTION
QUANTITY FOUR
HP AS REQUIRED, VOLTS 4000, PHASE 3, HERTZ 50, PF --
SERVICE: INDOOR X, OUTDOOR --
SERVICE FACTOR 1.0
NEMA DESIGN CLASS --
INSULATION SYSTEM: CLASS B, STANDARD --, SEALED X, ENCAPSULATED --, AMB TEMP 40 C
MOUNTING: VERTICAL --, HORIZONTAL X
SHAFT: SOLID X, HOLLOW --
ENCLOSURE: TYPE DRIPPROOF
SPACE HEATERS:
VOLTS 240
PHASE SINGLE-50 HERTZ
WIRED TO SEPARATE TERMINAL BOX: YES X, NO --
INLET AIR FILTER NONE
OTHER REQUIREMENTS: AS SPECIFIED

CURRENT TRANSFORMERS YES - RATIO LATER
SOLE PLATES: YES --, NO X
BEARINGS: TYPE SPLIT SLEEVE, MIN AFBMA L-10 RATED LIFE -- HRS
LUBRICATION: TYPE OIL RING, SYSTEM SELF-LUBRICATED
OTHER REQUIREMENTS: AS SPECIFIED

TEMPERATURE DETECTORS:
WIRED TO TERMINAL BLOCK IN SEPARATE DETECTOR TERMINAL BOX: YES X, NO --
WINDING:
NO. PER PHASE 2
TYPE THERMOCOUPLE AS SPECIFIED
BEARINGS:
TYPE THERMOCOUPLE AS SPECIFIED
DISCHARGE AIR:
TYPE NONE
STARTING CONDITIONS:
BUS VOLTAGES, KV: PRIOR TO START ____, MINIMUM ALLOWABLE DURING START ____;
IMPEDANCES, % ON ____ MVA BASE: SOURCE- ____ +j ____ -BUS- ____ +j ____ -MOTOR
OTHER REQUIREMENTS: ALL OTHER REQUIREMENTS NOT SPECIFIED ABOVE TO BE IN ACCORDANCE WITH SECTION 1D.

MOTOR
SPECIFICATION AND DATA SHEET

BLACK & VEATCH INTERNATIONAL
CONSULTING ENGINEERS
KANSAS CITY, MO

PERUSAHAAN UMUM LISTRIK NEGARA
AGENCY OF MINISTRY OF PUBLIC WORKS AND POWER
GOVERNMENT OF REPUBLIC OF INDONESIA
SEMARANG STEAM POWER PLANT
100 (2X50) MW UNITS 1 & 2

APPENDIX

PERUSAHAAN UMUM LISTRIK NEGARA

SEMARANG STEAM POWER PLANT

SPECIFICATIONS AND DOCUMENTS
FOR
AUXILIARY PUMPS

SPECIFICATION 6104 - M-26A

ADDENDUM 1
November 14, 1973

Each bidder shall note these revisions to the specifications and documents and incorporate these revisions in his proposal. Each bidder shall attach a signed acknowledged copy of this entire addendum in the front of the specifications and documents submitted with his proposal.

This addendum consists of 11 pages, revised Pages C-1, C-2, C-3, C-4, and CA-3 and new Pages C-5, C-6, C-7, C-8, and D-4a.

1. Page A-2. In the third line of the first paragraph, change the last word from "disqualification" to "rejection".

2. Page A-2. Add the words "and documents" following the word "specifications" in the first line of the second paragraph.

3. Page A-2. Delete the third paragraph and insert in its place the following revised paragraph:

   "Copies of the specifications and documents obtained in the United States require a deposit of $5.00; those obtained in Indonesia require a deposit of Rp 2,000. Deposits will not be refunded."

4. Page A-2. Add the words "and documents" following the word "specifications" in the fourth paragraph.

   Add the words "and documents" following the word "specifications" in the second sentence of the sixth paragraph.

5. Page A-2. In the second line of the seventh paragraph, delete the word "within" and substitute the phrase "for a period of".

6. Page A-2. Revise the first sentence of the last paragraph to read:

"The Perusahaan Umum Listrik Negara reserves the right to accept the proposal which, in its judgment, is the lowest responsive proposal submitted by a qualified bidder."

7. Page B-3, Article B.4.1. Revise the second paragraph to read as follows:

"The bidder shall not alter any part of these specifications and documents in any way."

8. Page B-4, Article B.4.3. Change the spelling of the name of the Owner's Director of Construction to read:

"Ir. Bagoes Moedijantoro"

9. Page B-5, Article B.4.4. Delete the second paragraph and insert the following:

"Unless otherwise specified, proposals shall be for the complete scope of the work specified in these specifications and documents. Proposals for individual components of the work will be considered only to the extent such partial scope of supply is specifically stipulated in the INVITATION TO BIDDERS and the PROPOSAL sections included as a part of these specifications and documents."

10. Page B-5, Article B.4.5. In the last line of this article, change the phrase "within 150 days" to read "for a period of 100 days".

11. Page B-5, Article B.6. In the third paragraph, sixth line, change "150 days" to read "100 days".

12. Page B-7, Article B.13. Revise the first sentence in the first paragraph to read:

"The Owner reserves the right to accept the proposal which, in its judgment, is the lowest responsive proposal submitted by a qualified bidder."

13. Page B-8, Article B.15. Delete this article in its entirety and insert the following:

"B.15 EVALUATION. Proposals will be evaluated on the basis of the fas lump sum price bid for each of the four categories of equipment and materials independently as specified.

The delivery date stipulated in Article 1A.6 must be met by the successful bidder and must be acknowledged in the proposal submitted."

14. Section C, PROPOSAL. Delete this section in its entirety and replace with revised Section C attached to this addendum.

15. Page D-4a. Insert new Page D-4a after Page D-4. Page D-4a is attached to this addendum.

16. Page CA-3. Delete entire page and replace with revised Page CA-3 attached to this addendum.

17. Page GC-3, Article GC.2. Delete Subarticle 15 at top of page in its entirety.

18. Page GC-4, Article GC.7. Delete entire article and replace with the following revised article:

"GC.7 ASSIGNMENT AND SUBCONTRACTING. The Contractor shall not assign or subcontract the work, or any part thereof, without the previous written consent of the Owner, Engineer, and AID, nor shall he assign, by power of attorney or otherwise, any of the money payable under this Contract unless written consent of the Owner has been obtained. No right under this Contract, nor claim for any money due or to become due hereunder shall be asserted against the Owner, or persons acting for the Owner, by reason of any so-called assignment of this Contract or any part thereof, unless such assignment has been authorized by the written consent of the Owner and AID. In case the Contractor is permitted to assign moneys due or to become due under this Contract, the instrument of assignment shall contain a clause subordinating the claim of the assignee to all prior liens for services rendered or materials supplied for the performance of the work.

Should any subcontractor fail to perform in a satisfactory manner the work undertaken by him, his subcontract shall be immediately terminated by the Contractor upon notice from the Owner. The Contractor shall be as fully responsible and accountable to the Owner for the acts and omissions of his subcontractors, and of persons either directly or indirectly employed by them, as he is for the acts and omissions of persons directly employed by him. Nothing contained in this Contract shall create any contractual relation between any subcontractor and the Owner."

19. Page GC-5, Article GC.8. Delete this article in its entirety and substitute the following:

"GC.8 ORAL AND WRITTEN STATEMENTS. It is understood and agreed that the written terms and provisions of this Contract shall supersede all oral and written statements made by either party to this Contract prior to entering into contract. Written statements made by either party prior to entering into contract and oral statements shall not be effective or be construed as being a part of this Contract."

20. Page GC-6, Article GC.11. Delete the first paragraph at the top of this page.

21. Page GC-6, Article GC.12. In the third paragraph, second line, delete the word "perfor" and substitute the word "perform".

22. Page GC-6, Article GC.13. Revise the sixth and seventh lines of this article to read:

"Contractor or any of his property; or if at any time the work under this Contract"

23. Page GC-7, Article GC.16. Delete this article in its entirety and substitute the following revised article:

"GC.16 FORCE MAJEURE. The term force majeure, as used in these contract documents shall mean any cause beyond the control of the Contractor, and which the Contractor could not foresee and/or reasonably provide against and which prevents the Contractor from wholly or partly performing any duties under the contract.

Force majeure shall include, but is not limited to, any of the following:

a. War, revolution, insurrection or hostilities (whether declared or not)

b. Riot, civil commotion or civil uprising (other than among the Contractor's employees)

c. Earthquake, flood, tempest, hurricane, lightning or other natural disaster

d. Any fire of major proportions, or explosion

e. Epidemic

f. Strike, lockout or other industrial disturbance

If there occurs an event constituting force majeure, the Contractor shall give written notice of the occurrence to the Owner within 15 days of the occurrence or as soon thereafter as is practicable, including a statement describing the effect of such occurrence upon the performance of this agreement.

In the event of a force majeure, the Contractor unless otherwise directed by the Owner in writing shall continue to undertake and perform the duties included in this Contract as far as is reasonably practicable. If prevented from so performing by such cause, the performance may be suspended during the continuance of such inability but for no longer period and such inability shall be removed if practicable with all reasonable dispatch..

In the event of a force majeure resulting in a suspension of work this Contract shall be extended by a period equal to that for which the Contractor was prevented from performing.

If such event lasts for more than 45 days after notice has been given to the Owner in writing, either party to this Contract may terminate this Contract and the Contractor shall thereupon be entitled to any sums which would be payable pursuant to the termination provision of this Contract."

24. Page GC-8, Article GC.17. In the sixth line of this article, delete the phrase "interest on investment".

25. Page GC-9, Article GC.19.1. In the third line of the second paragraph, delete the word "either".

In the fourth line of the second paragraph, delete the words "an action in court".

In the second and third paragraphs, wherever the phrase "Owner or Engineer" appears, change the phrase to "Owner and Engineer". (5 places)

26. Page GC-12, Article GC.23. Delete the last sentence of the first paragraph.

27. Page GC-13, Article GC.25. Add the following sentence to the first paragraph:

"Labor costs involved in carrying out such work shall be borne by the Contractor."

28. Page GC-22, Article GC.32.3. In the first paragraph, delete the phrase "except as provided for under the AID Capital Projects Guidelines M.O. 1442.2 and M.O. 1442.3".

Delete the third paragraph in this article.

29. Page GC-24, Article GC.33. Revise the first sentence in this article to read:

"Unless otherwise specified the Contractor shall begin the work under this Contract within 10 days after receipt of a notice to proceed from the Owner to be followed by the establishment of an irrevocable Letter of Credit in a mutually acceptable USA bank for the USA Dollar value of this Contract."

30. Page GC-24, Article GC.34. Delete the first two paragraphs in this article.

31. Page GC-30, Article GC.44. In the next to last paragraph on this page, insert the words "Contractor and the" between the words "The expatriate" in the first line.

In the ninth line of the next to last paragraph on this page, insert the words "Contractor and its" between the words "The expatriate".

32. Page GC-31, Article GC.49.1. Revise "South Yemen" to read "Yemen (Adan)".

33. Page 1A-1, Article 1A.2. Under Item 2, change the first line to read:

"The water pumps furnished under Item 2 of these specifications for each of the new gener-"

Under Item 2, change the first line of the second paragraph to read:

"The water pumps furnished under Item 2 of these specifications which are common to both"

Under Item 2, second paragraph delete "One fire pump" from the listing.

34. Page 1A-2, Article 1A.2. In the listing of pumps at the top of the page, delete "Two lube oil transfer pumps", "Two light oil supply pumps", and "Two fuel supply booster pumps" and add the following where these were deleted:

"Item 3

The oil pumps furnished under Item 3 of these specifications which are common to both Units 1 and 2 shall include the following:

Two lube oil transfer pumps

Two light oil supply pumps

Two fuel supply booster pumps

Item 4

One fire pump"

35. Page 1A-4, Article 1A.6. Change the second line of the first paragraph to read:

"of the equipment and materials to assure delivery at the end of ships tackle at the Port of Semarang,"

36. Page 1B-5, Article 1B.15. Revise the last line of this article to read as follows:

"paragraphs and at a range of ambient temperatures up to 50 C."

37. Page 1B-8, Article 1B.25. Delete the second paragraph on this page and insert the following revised paragraph:

"Unless otherwise specified, all pressure and temperature instruments shall have metric scales. Scales shall be in kilograms per square centimeter for pressure instruments and in degrees centigrade for temperature instruments."

38. Page 1D1-5, Article 1D1.5.8. Change the last sentence of the first paragraph to read:

"The ground lug size shall be in accordance with the following tabulation:

Full Load Motor Amperes	Minimum Ground Lug Range - AWG
0 thru 21	12 thru 10
22 thru 40	10 thru 8
41 thru 65	8 thru 6
66 thru 156	6 thru 4
157 thru 240	4 thru 2
241 thru 400	2 thru 1/0"

39. Page 2A-1, Article 2A.3. Change the second and third sentences of the first paragraph to read:

"The pumps shall be furnished complete with electric drive motors and separately mounted geared speed increaser if required. Pumps, speed increasers, and drive motors shall be mounted on full length base plates and shall be connected by flexible shaft couplings."

40. Page 2A-1, Article 2A.5. Change the second item listed from "Suction conditio s" to read "Suction conditions at design suction flow".

41. Page 2A-2, Article 2A.5. At the top of the page, change the total head from "4950" to read "4250" and change the maximum rotative speed from "3000" to read "4500".

42. Page 2A-5, Article 2A.11.6. Change the fourth line of the second paragraph to read:

> "to furnish oil to all radial bearings in the drive motor and to furnish oil to the speed increaser. The system shall"

Change the fourth sentence of the second paragraph to read:

> "Piping for motor bearing oil supply and discharge, and for the speed increaser supply and discharge shall be provided."

43. Page 2A-6, Article 2A.11.6. Delete the first paragraph at the top of the page and substitute the following:

> "If a separate motor driven auxiliary oil pump is required to assure adequate lubrication of all bearings during normal startup, during normal shutdowns, or during emergency shutdowns after failure of the shaft driven oil pump, then a motor driven auxiliary oil pump shall be provided with the lubrication system."

44. Page 2A-9. Add the following articles to Page 2A-9.

> "2A.15 SPEED INCREASERS. Speed increasers shall be as manufactured by DeLavel, General Electric, or Philadelphia Gear Works.
>
> 2A.15.1 Type. The speed increasers shall be of the double helical gear precision type designed for high speed operation, low noise level, and minimum power transmission losses. The speed increasers shall conform to the latest standards of the AGMA and shall have a minimum quality level of 14. The speed increasers shall be of the highest attainable reliability and shall not materially reduce the overall reliability of the pumping unit.

2A.15.2 Construction. Gears shall be of the herringbone (opposed helical) type of one piece forged or cast steel manufactured to close tolerances by hobbing and either shaving or hardening and grinding. Where possible, pinions shall be forged integral with the shaft.

For the face width, the lead of the pinion and gear shall be the same within 0.0003 inch. The lead tolerance shall be tested at zero torque by a rolling contact transfer test which shall demonstrate that 80 per cent of each helix is in contact. The apex runout of the gear set shall not exceed one mil. Durability and strength shall be rated in accordance with AGMA 421.06.

The gears and pinions shall be dynamically balanced after all machining operations are completed. During pumping unit tests, case vibration in the vicinity of the bearings shall not exceed one mil peak-to-peak at gear or pinion rotational frequency.

Bearings shall be high speed Babbitt metal split sleeve bearings. Provision shall be made in the bearings for resisting any thrust loads imposed by connected equipment. Bearings shall have locating pins to prevent rotation and insure proper location in the housing.

The speed increaser housing shall be of cast iron or fabricated steel construction and shall be horizontally split to provide access to all bearings, shafts, and gearing.

The speed increaser shall be lubricated by a pressure spray system using oil supplied from the pump lubricating system. Shaft seals shall be of the labyrinth type, of nonsparking material, and shall be horizontally split to facilitate maintenance.

2A.16 ALTERNATE PUMP DESIGN. Bidders may submit a proposal for boiler feed pumps of the barrel type design in lieu of, or in addition to, a proposal for the split case pumps specified in the preceding paragraphs. The alternate barrel type pumps shall be in accordance with all applicable requirements stated herein for the split case pumps.

In lieu of the spare parts listed for the split case pumps, for the barrel type pumps, one spare inner case and rotating element shall be provided. The spare element shall be identical with the pumps proposed and shall be complete with shaft, shaft bushings, impellers, wearing rings, inner casing, shaft seals, and bearings."

45. Page 2B-16. Change the pump type designation from "HSCP" to read "HSCP or FMESP".

46. Page 2B-20. Change the pump type designation from "FMESP" to read "FMESP or HSCP".

BLACK & VEATCH INTERNATIONAL
Consulting Engineers

* * * * * * * * * * * * *

ACKNOWLEDGMENT

The undersigned bidder hereby certifies that the revisions set forth in this addendum have been incorporated in his bid and are a part of the specifications and documents.

BINGHAM - WILLAMETTE COMPANY
Signed a Division of Guy F. Atkinson Company

Wm. E. Tharp, General Manager
Date January 24, 1974

(PLN - 6104)
(AUXILIARY PUMPS - M-26A)
(ADDENDUM 1)
111473

PROPOSAL

To: Ir. Bagoes Moedijantoro, Director of Construction
PERUSAHAAN UMUM LISTRIK NEGARA
Jalan Sunan Ngampel 1
Kebajoran Baru, Jakarta, Indonesia

PROPOSAL FOR AUXILIARY PUMPS

Gentlemen:

The undersigned bidder having read and examined the specifications and associated contract documents for the above designated equipment and materials which will be incorporated in the new Semarang Steam Power Plant does hereby propose to furnish the equipment and materials and provide the services set forth in this Proposal.

All prices stated herein are firm and shall not be subject to escalation provided this Proposal is accepted within 100 days after the date of opening of the proposals.

The prices stated in USA Dollars include all USA taxes which might lawfully be assessed against the undersigned. All Indonesian taxes which might lawfully be assessed against the undersigned shall be for the account of the Owner in accordance with the provisions of Article GC.22.2 of the GENERAL CONDITIONS.

LUMP SUM PRICES

The undersigned bidder hereby proposes to furnish the boiler feed pumps; and/or the water pumps; and/or the oil pumps; and/or the fire pump in accordance with the specifications and associated contract documents as defined in Article GC.1 of the GENERAL CONDITIONS for the following firm lump sum prices.

C.1 BOILER FEED PUMPS

C.1.1 Equipment

Lump sum price for furnishing the boiler feed pumps fas USA port of shipment complete as specified:

_____

_____ Dollars ($ USA)
(Price in Words)

C.1.2 Freight

Estimated lump sum price of ocean freight including port charges for handling, loading, and unloading onto barge; insurance; and port surcharge for shipping the boiler feed pumps from USA port to Port of Semarang, Indonesia:

_____

_____ Dollars ($ USA)
(Price in Words)

C.1.3 Manufacturer's Field Services

If required by the Owner, manufacturer's technical field services for the boiler feed pumps specified in Section 1A will be furnished at the following rates.

C.1.3.1 Representative's Daily Service Rate

Service rate for each technical field representative exclusive of living costs, expenses and transportation, and on the basis of six 8-hour days per week on the site:

_____

_____ Dollars ($ USA)
(Price in Words)

C.1.3.2 Overtime Rate

Service representative's time in excess of 48 hours per week will be provided at the following hourly rate:

_____

_____ Dollars ($ USA)
(Price in Words)

C.1.3.3 Expenses

Living costs and other expenses incurred in Indonesia will be invoiced at cost but will not exceed the following per diem:

_____

_____ Rupiahs (Rp IND)
(Price in Words)

C.1.3.4 Transportation

Estimated cost per round trip from the bidder's office to Semarang, Central Java, Indonesia and return, including living costs and other expenses incidental to travel, but excluding per diem salary cost:

_____

_____ Dollars ($ USA)
(Price in Words)

and

_____

_____ Rupiahs (Rp IND)
(Price in Words)

C.2 WATER PUMPS

C.2.1 Equipment

Lump sum price for furnishing the water pumps fas USA port of shipment complete as specified:

_____

_____ Dollars ($ USA)
(Price in Words)

C.2.2 Freight

Estimated lump sum price of ocean freight including port charges for handling, loading, and unloading onto barge; insurance; and port surcharge for shipping the water pumps from USA port to Port of Semarang, Indonesia:

_____

_____ Dollars ($ USA)
(Price in Words)

C.2.3 Manufacturer's Field Services

If required by the Owner, manufacturer's technical field services for the water pumps specified in Section 1A will be furnished at the following rates.

C.1.3.4 Transportation

Estimated cost per round trip from the bidder's office to Semarang, Central Java, Indonesia and return, including living costs and other expenses incidental to travel, but excluding per diem salary cost:

_____

_____ Dollars($ USA)
(Price in Words)

and

_____

_____ Rupiahs(Rp IND)
(Price in Words)

C.2 WATER PUMPS

C.2.1 Equipment

Lump sum price for furnishing the water pumps fas USA port of shipment complete as specified:

_____

_____ Dollars($ USA)
(Price in Words)

C.2.2 Freight

Estimated lump sum price of ocean freight including port charges for handling, loading, and unloading onto barge; insurance; and port surcharge for shipping the water pumps from USA port to Port of Semarang, Indonesia:

_____

_____ Dollars($ USA)
(Price in Words)

C.2.3 Manufacturer's Field Services

If required by the Owner, manufacturer's technical field services for the water pumps specified in Section 1A will be furnished at the following rates.

C.2.3.1 **Representative's Daily Service Rate**

Service rate for each technical field representative exclusive of living costs, expenses and transportation, and on the basis of six 8-hour days per week on the site:

_____

_____ Dollars($ USA)
(Price in Words)

C.2.3.2 Overtime Rate

Service representative's time in excess of 48 hours per week will be provided at the following hourly rate:

_____

_____ Dollars($ USA)
(Price in Words)

C.2.3.3 Expenses

Living costs and other expenses incurred in Indonesia will be invoiced at cost but will not exceed the following per diem:

_____

_____ Rupiahs(Rp IND)
(Price in Words)

C.2.3.4 Transportation

Estimated cost per round trip from the bidder's office to Semarang, Central Java, Indonesia and return, including living costs and other expenses incidental to travel, but excluding per diem salary cost:

_____

_____ Dollars($ USA)
(Price in Words)

and

_____

_____ Rupiahs(Rp IND)
(Price in Words)

C.3 OIL PUMPS

C.3.1 Equipment

Lump sum price for furnishing the oil pumps fas USA port of shipment complete as specified:

_____

_____ Dollars($ USA)
(Price in Words)

C.3.2 Freight

Estimated lump sum price of ocean freight including port charges for handling, loading, and unloading onto barge; insurance; and port surcharge for shipping the oil pumps from USA port to Port of Semarang, Indonesia:

_____

_____ Dollars($ USA)
(Price in Words)

C.3.3 Manufacturer's Field Services

If required by the Owner, manufacturer's technical field services for the oil pumps specified in Section 1A will be furnished at the following rates.

C.3.3.1 Representative's Daily Service Rate

Service rate for each technical field representative exclusive of living costs, expenses and transportation, and on the basis of six 8-hour days per week on the site:

_____

_____ Dollars($ USA)
(Price in Words)

C.3.3.2 Overtime Rate

Service representative's time in excess of 48 hours per week will be provided at the following hourly rate:

_____

_____ Dollars($ USA)
(Price in Words)

C.3.3.3 **Expenses**

Living costs and other expenses incurred in Indonesia will be invoiced at cost but will not exceed the following per diem:

_____

_____ Rupiahs (Rp IND)
(Price in Words)

C.3.3.4 Transportation

Estimated cost per round trip from the bidder's office to Semarang, Central Java, Indonesia and return, including living costs and other expenses incidental to travel, but excluding per diem salary cost:

_____

_____ Dollars ($ USA)
(Price in Words)

and

_____

_____ Rupiahs (Rp IND)
(Price in Words)

C.4 FIRE PUMP

C.4.1 Equipment

Lump sum price for furnishing the fire pump fas USA port of shipment complete as specified:

_____

_____ Dollars ($ USA)
(Price in Words)

C.4.2 Freight

Estimated lump sum price of ocean freight including port charges for handling, loading, and unloading onto barge; insurance; and

port surcharge for shipping the fire pump from USA port to Port of Semarang, Indonesia:

_____

_____ Dollars($ USA)
(Price in Words)

C.4.3 Manufacturer's Field Services

If required by the Owner, manufacturer's technical field services for the fire pump specified in Section 1A will be furnished at the following rates.

C.4.3.1 Representative's Daily Service Rate

Service rate for each technical field representative exclusive of living costs, expenses and transportation, and on the basis of six 8-hour days per week on the site:

_____

_____ Dollars(S USA)
(Price in Words)

C.4.3.2 Overtime Rate

Service representative's time in excess of 48 hours per week will be provided at the following hourly rate:

_____

_____ Dollars($ USA)
(Price in Words)

C.4.3.3 Expenses

Living costs and other expenses incurred in Indonesia will be invoiced at cost but will not exceed the following per diem:

_____

_____ Rupiahs(Rp IND)
(Price in Words)

C.4.3.4 Transportation

Estimated cost per round trip from the bidder's office to Semarang, Central Java, Indonesia and return, including

living costs and other expenses incidental to travel, but excluding per diem salary cost;

_____

_____ Dollars ($ USA)
(Price in Words)

and

_____

_____ Rupiahs (Rp IND)
(Price in Words)

*The rupiahs to dollar conversion rate is 415 Rupiahs per USA Dollar.

The undersigned hereby declares that only persons or firms interested in the Proposal as principal or principals are named herein, and that no other persons or firms than herein mentioned have any interest in this Proposal or in the contract to be entered into; that this Proposal is made without connection with any other person, company, or parties likewise submitting a proposal; and that it is in all respects for and in good faith, without collusion or fraud.

If this Proposal is accepted, the undersigned bidder agrees to submit engineering data, provide services, and complete delivery of the equipment and materials in accordance with the schedules stipulated in the specifications. The undersigned fully understands that adherence to the schedules stipulated is of the essence of the contract.

If this Proposal is accepted, the undersigned hereby agrees to enter into a contract on the attached forms within 45 calendar days from the date of notice by the Owner of award of contract and to furnish a Performance Bond satisfactory to the Owner.

Dated at _____ this ____ day of _____, 19__.

Bidder _____

By _____

Title _____

Business Address of Bidder _____

_____

State of Incorporation _____

Address of Principal Office _____

_____

*This Addendum issued. Page C-8 was not used by the Contractor in preparation of his proposal. Therefore, the originally issued specification document page C-5 (inadvertently used and signed by the Contractor) is included as page C-4 in this contract.

_____
(Bidder's Name)

Speed increaser

Name of manufacturer _____

Model or type number _____

Service factor _____

Gear ratio _____

Maximum horsepower rating _____

Shaft arrangement _____

Gears

Material _____

Hardness _____

Contact stress _____

Reliability factor _____

Load distribution facto _____

Life factor _____

Description of internal lubrication system _____

(Trim Line)

(PLN - 6104)
(AUXILIARY PUMPS - M-26A)
(ADDENDUM 1)
111473

ARTICLE V. That time of delivery is of the essence of this Contract Agreement, and that the Contractor shall proceed with the specified work and shall conform to the schedule specified in Section 1A of the attached specifications under the heading "SCHEDULE".

ARTICLE VI. That in the event the Contractor shall fail to deliver the specified equipment and materials within the time period stipulated in the foregoing Article V, the Contractor shall be liable to the Owner for the following amounts for each calendar day of default, as liquidated damages and not as a penalty, in accordance with the provisions of Article GC.34 of the GENERAL CONDITIONS.

Equipment	Liquidated Damages
Item 1	
Boiler feed pumps (Unit 1 or 2)	$150
Item 2	
Auxiliary water pumps common to Units 1 and 2	$ 20
Remainder of auxiliary water pumps (Unit 1 or 2)	$ 15
Item 3	
Auxiliary oil pumps	$ 25
Item 4	
Fire pump	$ 5

The liquidated damages shall apply to each individual item listed; provided further that the total amount of liquidated damages shall not exceed ten per cent of the contract price for that item of equipment or material.

IN WITNESS WHEREOF, the parties hereto have executed this Contract Agreement as of the day and year first above written.

PERUSAHAAN UMUM LISTRIK NEGARA

Attest _____ (Seal)

_____ By _____

CONTRACTOR

_____

Attest _____ (Seal)

_____ By _____

(PLN - 6104)
(AUXILIARY PUMPS - M-26A)
(ADDENDUM 1)
111473

PERUSAHAAN UMUM LISTRIK NEGARA

SEMARANG STEAM POWER PLANT

SPECIFICATIONS AND DOCUMENTS
FOR
AUXILIARY PUMPS

SPECIFICATION M-26A

ADDENDUM 2
December 18, 1973

Each bidder shall note these revisions to the contract documents and incorporate these revisions in his proposal. Each bidder shall attach a signed acknowledged copy of this entire addendum in the front of the specifications submitted with his proposal.

This addendum consists of this page.

1. Page A-1. Change the closing date for receipt of proposals indicated in the sixth line of the first paragraph to "January 5, 1974".

BLACK & VEATCH INTERNATIONAL
Consulting Engineers

* * * * * * * * * * * * * * * *

ACKNOWLEDGMENT

The undersigned bidder hereby certifies that the revisions set forth in this addendum have been incorporated in his bid and are a part of the contract documents.

BINGHAM - WILLAMETTE COMPANY
Signed a Division of Guy F. Atkinson Company

Wm. E. Tharp, General Manager

Date January 24, 1974

(PLN - 6104)
(AUXILIARY PUMPS - M-26A)
(ADDENDUM 2)
121873

PERUSAHAAN UMUM LISTRIK NEGARA

SEMARANG STEAM POWER PLANT

SPECIFICATIONS AND DOCUMENTS
FOR
AUXILIARY PUMPS

SPECIFICATION M-26A

ADDENDUM 3
December 31, 1973

Each bidder shall note these revisions to the contract documents and incorporate these revisions in his proposal. Each bidder shall attach a signed acknowledged copy of this entire addendum in the front of the specifications submitted with his proposal.

This addendum consists of this page.

1. Page A-1. Change the closing date for receipt of proposals indicated in the sixth line of the first paragraph to "February 1, 1974".

BLACK & VEATCH INTERNATIONAL
Consulting Engineers

* * * * * * * * * * * * * * * *

ACKNOWLEDGMENT

The undersigned bidder hereby certifies that the revisions set forth in this addendum have been incorporated in his bid and are a part of the contract documents.

BINGHAM - WILLAMETTE COMPANY
Signed a Division of Guy F. Atkinson Company

Wm. E. Tharp, General Manager

Date January 24, 1974

(PLN - 6104)
(AUXILIARY PUMPS - M-26A)
(ADDENDUM 3)
123173