9310236 (3)
PD-AAC-837-A1

May 24, 1976

MEMORANDUM FOR: TA/AGR, Dr. Leon Hesser

FROM: AA/TA, Curtis Farrar CF

SUBJECT: Comprehensive Resources Project Approval

I have approved this project with enthusiasm. Please prepare a brief information memorandum for the Administrator describing the project as one likely to be of special interest to him. 34p.

In implementing it, I should like you to observe the following conditions of approval. If any of them cause difficulty, please let me know.

1. The points made at the Planning Committee meeting of April 30 should be given full account in planning Phase I.

2. Mr. Conitz comments that ERTS may not give the degree of resolution required should also be taken into account. One important aspect of the project may be to provide data on the degree of resolution required for LDC applications where good aerial photography is not available. This may be an input to planning of ERTS successors.

3. Please work closely with TA/OST in ensuring that the requisite ERTS applications capacities are employed in the project.

4. Please add to the focus of the project the question of climate variation. I have in mind particularly a capacity in the model to look at the implications of weather over the coming decades being significantly worse than it has recently been. If USDA does not have the capacity to do this, NOAA climate specialists might be brought in.

5. Please look at the possible relationships between this activity and the work being done to classify soil types with the purpose of transferring production technology directly from one micro climate to another similar one in a different part of the world.

6. As part of the follow up to the Satellite Technology Bicentennial project, please consider whether a specific effort should be made in FY 1978 to expand this activity to another region.

cc: TA/PPU:JGunning
AA/TA:MSBelcher
AA/TA:JChandler
TA/OST:HArnold

May 20, 1976

TO: AA/TA, Mr. Curtis Farrar

FROM: TA/PPU, John Cunning

SUBJECT: Approval of Major Activity within the Expanded Program of Agricultural and Rural Sector Analysis - Comprehensive Resources Inventory and Evaluation Systems

Attached for your review and approval is the first major activity to be proposed under the Expanded Program Project. The "Comprehensive Resources Inventory and Evaluation Systems" project is to be carried out in two LA countries over a four year period with a total project cost of $1,000,000. The activity has been reviewed and endorsed by the inter-bureau "Expanded Program" Committee and is backed specifically by LA. Committee minutes are attached.

PPU asked for comments from TA/CST in view of the remote sensing aspects of the proposal. Mr. Conitz' reply is attached. These and the Committee comments noted in the minutes, should be incorporated in your approval of the activity which is recommended by TA/PPU.

The amount of initial funding of the activity and obligation in FY 1976 or the T.Q. will have to remain subject to the establishment of our final OYB which we expect momentarily. We hope to provide for the full amount of funding requested by TA/AGR if this is possible and will request SER/CM to prepare a PASA for FY 1976 funding.

cc: TA/AGR, Dr. Hesser
Dr. Merrill

931-2 236

# A PROPOSAL FOR A COMPREHENSIVE RESOURCES INVENTORY AND EVALUATION SYSTEM FOR AGRICULTURAL PLANNING:

with applications in the Dominican Republic and a second Latin American country

TA/AGR/ESP
March 30, 1976

## Table of Contents


I. Summary Description ..... 1

II. Detailed Description ..... 1-4

A. Background and Justification ..... 1-4

B. Goal ..... 4

C. Purpose ..... 5-6

D. Outputs ..... 6-7

E. Technical Elements and Design ..... 7-9

F. Implementation Schedule ..... 9-12

Phase I ..... 9-12

Phase II ..... 9-12

G. Activity Soundness ..... 14

H. Environmental Impacts ..... 14

III. BUDGET AND ADMINISTRATIVE ARRANGEMENTS ..... 15-18

A. Budget Plan and Financing Schedule ..... 15-18

B. Administrative Support and Arrangements ..... 18-19

ANNEX I. LOGICAL FRAMEWORK MATRIX ..... 20 a

II. PROJECT PERFORMANCE TRACKING NETWORK CHART ..... 21

III. SYSTEM DESIGN ..... 22

# COMPREHENSIVE RESOURCE INVENTORY AND EVALUATION SYSTEM FOR AGRICULTURAL PLANNING

## I. SUMMARY DESCRIPTION

Reliable estimates of the economic supply options of the resource base and, conversely, estimates of resource production adjustment and production response, would materially strengthen agricultural sector planning systems and expand the scope of questions that can be addressed by sector analysis techniques.

This Activity proposes to adapt existing methodology and techniques developed by the U.S. Department of Agriculture (USDA) and the National Aeronautics and Space Agency (NASA) in the U.S. to the problem of assembling, classifying and systematically analyzing information to estimate agricultural supply options and resource potentials which reflect the quantity and quality of available resources, their relationships, economic determinants and institutional impediments. Further, the activity will be coordinated with, and linked to, an on-going sector analysis project in the Dominican Republic (DR) (and a planned sector analysis activity in a second Latin American country) to provide improved estimates of sector response and on-farm impacts of alternative policies and programs.

The resource inventory will be based upon Earth Resources Technology Satellite (ERTS) imagery and tapes which are merged with soil and environmental information to divide resources into homogeneous units that are similar with respect to soil, slope, erosion, climate, water resources, type of farming, productivity, problems, and development potentials. For each of these unique resource units, production function data will be estimated for existing and potential crop options under reasonable alternative levels of technology.

The work will begin in the Dominican Republic and be extended to a second country over a 4 year period. The System will be internalized by developing the capability of country planning personnel to maintain, refine and utilize the system on a continuing basis. Seminars for improving procedures and acquainting other countries with the process also are planned.

## II. DETAILED DESCRIPTION

### A. Background and Justification.

The AID-assisted sector analysis work ongoing in several LDC's will provide analytical tools to estimate trade-offs and relative efficiencies of different policy instruments in meeting specified country objectives. These analyses provide baseline measurements of the current status of the agricultural sector and insights on how the sector functions together with major linkages to other sectors of the economy. Such techniques estimate functional relationships of income, employment and production according to farm size classes in different regions and identify correlations between sector performance and factors which might be influenced by programs and policy decisions.

Sector modeling, of necessity, concentrates on the firms, people and institutions of the sector. A basic understanding and modeling of this phase is a necessary first step in providing a useful monitoring tool to policy makers. The methodology frequently used allocates available resources (farm units of land,

labor, etc.) among alternative activities (crop and livestock enterprises) to provide an optimal pattern among firms and resources to achieve single and multi-objectives (income, employment etc.) subject to constraints and assumption. Such systems stratify farm firms into a set of representative farms to estimate likely farmer response to policy changes and programs. Broader, sector-level frameworks are employed to aggregate respresentative farm response to sector performance and identify major off-farm linkages and impacts. Each sector level estimate produced from such a system is unique to the set of conditions (goals, constraints and assumptions) specified and the estimate of sector activity will change in response to a change in any parameter The estimates are meaningful only if realistic constraints and data are included. Demand, for example, must be estimated for foreign and domestic markets and translated into individual commodity production goals. Without demand constraints and estimates of price elasticity, optimal strategy of single representative farms would not reflect consideration of sector effects on aggregate supply and price response. Hence, the impacts of a program, estimated with and without sector links to reflect price effects of aggregate supply, could vary widely. Several projects are already giving attention to demand as a constraint.

Land and water, like demand, can act also as a constraint on policies and programs and their impact. Representative farms, while highly correlated to land resources and their natural environment, may not entirely reflect the land and water resource quantity, quality, and potential available to planners and policy makers. This activity will focus on land and water and its production environment.

The DR was chosen as one of the test countries, in part, because a sector analysis project is being implemented there. This work, like most sector analysis, is based upon a cross-sectional analysis of farm firms without explicit consideration of soil resources and other environmental factors. Farm firms will be sampled and statistically related to the area sample-frame 1/ firms to provide a set of representative farm firms within sector totals. Information from this farm survey will provide an empirical base for establishing cultural practices, costs, institutional arrangements and constraints, current technology levels, and reasonableness constraints for a host of other variables.

If this analysis can be supplemented by reliable estimates of the total land resource base--its quality, its development potential and its options--the reliability of sector estimates will be improved and the scope of questions addressed can be expanded. In addition, the analysis of representative farms can be related to the soil and environmental resources, and the "cause and effects" relationships explored.

The Activity presented here, Comprehensive Resources Inventory and Evaluation System (CRIES), is proposed as an individual, yet coordinated, part of total sector analysis in developing countries. The CRIE System will assemble available data and information on soils, water, climate, plant adatability, tech-

1/ Recently developed in the DR with assistance from USDA, SRS.

nologies, resource development opportunities, institutions and economic factors into a coordinated simulation system to systematically explore the economic supply options of a country's resources and estimate the resource use impact of policies and programs. Further, the system will be linked to the sector analysis system and sample-frame program to provide comprehensive sector analysis and impact measurements. Since the same contractor (USDA) is setting up the basic statistical sample frame system, is undertaking the sector analysis work and will handle this activity, there is assurance that all three acticity systems will link into a single sector program, all data are compatible and statistically correlated and complementarities are exploited.

The methodologies being proposed here are not new although their application in developing countries is. The Economic Research Service (ERS) has been active in similar analytical work and modeling for many years. The the most recent and significant effort in this area is the "National Water Assessment Model of Regional Agricultural Production, Land and Water Use, and Environmental Interaction" constructed cooperatively by the Center for Agricultural and Rural Development (CARD) of Iowa State University, the RANN Program of the National Science Foundation and the Natural Resource Economics Division of the Economic Research Service for the United States Water Resource Council. This model includes a land inventory dividing the U.S. into 105 producing areas, 9 land classes, 51 water supply regions and 30 market regions. Variables include land, water, soil loss, demand, crop, livestock and transportation sectors. The model was formulated and used to tie together the many regional characteristics of American agriculture and to interpret their inter-actions in response to alternative policies. The system as formulated, with its backup data generators, has the capability of evaluating policy which affects regional resource availabilities, soil loss (erosion) limitations, fertilizer, inputs, translation of demand into commodities, farming techniques and alternative resource pricing policies.

A similar model was developed in 1970 to 1972 by the ERS and Forest Service, USDA. This "Forest Range Environmental Program Analytical System" (FREPAS) provides the Forest Service with the analytical and computer capability required to (1) review the present national range situation, (2) project future range product needs, and (3) derive alternatives for future Forest Service range programs. The data system encompasses 34 types of ecosystems producing many goods and services. While grazing use is considered primary, the data system accumulates values for about 20 other physical products and environmental indicators. The function of FREPAS is to find the optimum set of factors (planning, investment, management, and maintenance costs) under alternative strategies for the use of forest-range resources in achieving alternative goals for grazing and related social and environmental values. The model is used on a continuing basis in determining Forest Service annual program and budget allocations. Other countries also have adopted it in planning systems. This model is an extension and application of earlier modeling work in Nebraska developed by McDonnell Automation Company called Generalized Agricultural Production Analytical System (GAPAS).

These two systems merely illustrate a long and varied experience by ERS in the field. There are more. Each extension applies known and tested data and analytical techniques to new problems, policy and data situations. Much of the expertise, techniques and computer applications can be applied to this project directly. Others will require modifications and testing to determine which, of several alternatives, is most appropriate to the new situation.

The other USDA agencies cooperating on this activity also have considerable experience collaborating on the type of resource data system being proposed here and considerable knowledge about various aspects of the physical resource base in many developing countries. Between 1945 and 1970, for example, the Soil Conservation Service (SCS), USDA, prepared maps of soils for the entire world (with the exception of Australia). The maps for Dominican Republic and other Latin American countries from this internationally consistent system will form the base for soils work in this activity. Hence, all work in the activity will furnish host countries with updated soild inventories that are extremely useful and comparable to soils work in other countries.

The Agricultural Research Service, (ARS) USDA, also has an international data program which will be relied upon heavily for inputs in the activity. ARS has classified 1,000 crops by ecological and plant life parameters and has the capability to computer match climatic parameters of any area in the world with this data band of crops. These data have been checked by sending questionnaires to scientific people throughout the world who reported on species successfully grown, soil type, elevation, pH, salinity, climatic parameters, planting and harvesting dates, yields and special conditions (fertilizer, irrigation, etc.). These data will be very useful in the application of information and development of data in the DR and the second country and will provide the countries with consistent comparisons of their alternatives and those of other Latin American countries.

B. Goals.

Activity goals are:

1. To assist developing countries to develop their capacity to identify and analyze the consequences of alternative policies, programs, and prospects for agricultural and rural development in terms of their own multiple economic and social goals.

2. To improve the informational and analytical basis for making decisions on agricultural and rural development strategies, policies and investments.

3. To expand the number and enhance the capability of developing country planning personnel to construct and use such an information base and analytical system.

These are the goals of sector analysis. This project is viewed as an integral part of sector analysis work and is directed, therefore, to the achievement of the same goals.

C. Purposes

1. To select and apply techniques for collecting, classifying, collating and documenting data on a country's land and water resources, land use, production inputs, and expected outputs, production costs, technology options and institutional constraints.

2. To establish a system, using existing data management techniques and analytical processes, for evaluating these data.

3. To demonstrate the analytical capabilities of this system and test the reliability and usefulness of the results.

4. To develop procedures for linking the resource data and analytical system into a sector analysis.

5. To internalize utilization of the techniques developed as part of the activity and integrate the system with sector analysis activities in the country.

Many of the techniques proposed already have been developed and used in the United States. What is new is their application to the developing countries for the purposes described. Choosing the Dominican Republic as one of the test countries will facilitate the achievement of one major purpose--to develop procedures for linking the resource data and evaluation system into a sector analysis.

These techniques have a broader clientele than just sector analysis countries--i.e. policy makers in sector assessment countries and other developing countries can use these techniques to help identify appropriate resource development programs. The assumption is that these techniques, once developed and tested in the Dominican Republic and another Latin American country will be generalizable to all developing countries. Having better information on the resource base of many developing countries could contribute to another objective -- improving estimates of world food production potentials. USDA's contribution to this activity is motivated by this longer-term, global objective.

Since the data management and analytical systems developed in the two test countries can be used by, and will be useful to, other developing countries, all techniques and results will be documented and widely disseminated. This is provided for in the budget. Additionally, USDA's analysts also could be made available for TDY assignments to assist personnel in interested developing countries with the use of the new techniques -- how and when to use them, what types of data and trained personnel are required to use them, their cost effectiveness. Internalization activities of this kind are funded in this activity; additional services could be purchased either by AID Missions or by a country itself.

In an effort to acquaint Latin American policy makers and analysts with the activity and with types of services which could be made available, a seminar is planned for the final year to be sponsored by a regional organization such as IICA. Funding for staff to help prepare for and attend such a session has been included. In addition to the aforementioned purposes, such a session would provide a convenient forum for a final review of the activity and its outputs.

Internalization of the techniques, in-country utilization and integration with sector analysis are primary purposes of this activity. The budget and implementation plans include resources for assisting the cooperating countries in the utilization of the system and for testing the reliability and usefulness of the results. The activity will cooperate fully with other sector analysis groups in this process. One immediate task in the DR and a second country will be to review the trained manpower situation and institutional structure to make recommendations about the amounts and type of training needed, possible institutional changes, etc, to insure that the data and evaluation techniques, once developed, can be successfully utilized and integrated with sector analysis activities.

D. Outputs

Expected outputs are as follows:

1. A data management and evaluation system capable of estimating the resource/production potential of a developing country, applied specifically to the land and water resource data of the DR and a second country.

2. A data bank including information on land and water resources, production levels and costs, technology options, and institutional constraints for each of the two test countries.

3. Selected analyses of resource constraints, production potentials, resource development programs, etc. for the two test countries.

4. In-country capability to construct, refine and utilize this system in the two test countries, as an integrated component of their sector planning activities.

A series of technical documents will be prepared describing the data management and evaluation system, how the system is used, and some of its applications. A popular publication will be prepared (in addition to the series of technical documents) to insure that a broader spectrum of people -- decision makers in national and international development agencies, for example--will become familiar with and interested in using the techniques developed. A data bank, including information on land and water resources, land use, production inputs and outputs, production costs technology options, and institutional constraints, will be developed for each of the two test countries. To be sure that decision makers, as well as planners are made aware of the amount and type of data available in the data banks, information of specific interest to them will be selected and made available on maps and/or in written form. A special effort will also be made to

demonstrate to planners and decision makers how these techniques can be used to help evaluate alternative investments in natural resources, land expansion, irrigation, drainage, conservation, reforestation programs etc. (See Annex I log frame).

E. Technical Elements and Design

The ecological production process encompasses an infinite array of land resource-product combinations. This array is further complicated by a wide range of policy, management, technology, institutional and market options.

The system proposed is structured to provide a unified, systematic framework to incorporate and stratify the major factors that influence the production process into discrete ranges for which single estimates can be made. In this way, the infinite production process can be generalized to cross-section which depict the complex interactions of production possibilities within the computer limitations of simultaneous consideration.

The proposed Comprehensive Resources Inventory and Evaluation System establishes a unified framework of land inventory, vegetative options, technological and institutional possibilities, production responses and economic costs suitable for a wide range of in-country applications. The objective of the system is to assemble existing data and information from several disciplines into a single, unified data bank which can provide a systematic approach to data storage and retrieval for simulation and analysis.

The supply, quality and location of land and water resource factors will be mapped on a series of overlays on the latest editions of topographic maps. Soil associations, climatic zones and selected inherent constraints (transportation, etc.), and resource development potentials will be combined to identify unique resource production units (RPU's). Some of these units will be further subdivided on the basis of slope problems, development, and/or other relevant factors too dispersed in nature for map delineation. Water will be evaluated in terms of quantity, quality and location and screened for proximity to suitable soils on a case-by-case basis.

To complete the land and water inventory and transfer the data to computer tape, ERTS imagery will be obtained and correlated to the topographic base. The soil, climate, and problem overlays will be digitized and coded on the ERTS tape. At the same time, appropriate political boundary information will be coded on the land and water inventory tape.

Once completed, the resource inventory will provide the foundation and coordination of the computerized data inventory and evaluation system. The balance of the system will be coefficient files master coded to the land and water tape for rapid computer matching and processing.

The second set of major factor to be stratified into finite groups with unique single-valued estimates is the managerial, institutional, technological and policy inputs. Data from the sector analysis and farm firm schedules will be analyzed to provide a measurement of current and reasonable assumptions and criteria for technology options (TO's). Benchmark levels will be described with definitions that will make inter-country comparison and aggregation meaningful. Within the overall criteria, sector data will furnish the information to define and document the specifics necessary to make the TO's useful for intra-country analysis.

The baseline TO's and overall criteria proposed are:

TO 1 - current technology as practiced by average, typical farmers in the individual country.

TO 2 - current technology as practiced by the best few farmers.

Even though the country specifics of these levels will vary, they will furnish useful descriptions of actual production possibilities for both inter- and intra-country analysis. The details of the system will be carefully studied before final criteria are specified, and final decisions will be based upon close coordination with the sector analysis project and seminars with experts in the field. Options such as describing TO 1 to the cross-sectional detail of representative farms in the sector system will be explored. Additional TO's will be defined as in-country policy questions are specified and sector analysis questions are determined. For example, drastic changes in the price relationships among inputs, land use changes, increasing farm sizes, and government subsidies on large machinery are but a few that could be defined as new technology assumptions and tested in the system.

ERTS vegetative cover and land use data, local information, sector data, sample frame information and on-the-ground reconnaissance will be used to disaggregate land use totals to cropping patterns of individual crops by RPU's. Relative productivity among RPU's will be estimated from soils information and other local data. The system will be adjusted to national acreage and production totals constructed from annual data to reflect planting and production levels typical of current average with annual variations removed. Data sources and an appraisal of their relative quality will be documented.

Current country prices will be computed to furnish a price base for the activity. Initial analysis will estimate supply potential and farm income at these price, and later analyses may measure supply options from development opportunities at alternative price levels.

Existing sector data, local data and experience will be used to estimate relative production costs among areas, RPU's, options, and development opportunities. These data will be prepared by elements whenever possible to adapt data procedures to existing computerized budgeting systems in ERS.

The level and mix of production goals can vary from current production levels to larger and larger goals until they exhaust the economic, and finally, the physical development potential of the resources. Again, user specification of the goals will rely heavily on sector work.

Constraints on the sytems to reflect such things as crop rotations, social costs and desires, personal choices, institutional constraints, double cropping and other factors will be estimated. By combining these constraints with data input (yields, cultural practices, costs) to reflect specially defined technology options, the system can simulate many situations useful to policy analysis. For example, the following assumptions could be simulated in the data and impacts measured:

1. What would the production and income impact be (at constant prices) of raising the average management level to that currently practiced by the top 10% (TO 2)?

2. If demand for a single crop increased 25%, which RPU's, regions and development opportunities would be the most efficient source, and what would the land and water use change and income impact be?

F. Implementation Schedule

The activity will be carried out in two phases. The first phase will emphasize the development of the methodology for organizing and analyzing the resource data. The second phase is focused primarily on the utilization of the basic data and methodologies in actual sector planning situations. There is some overlap in the timing of these phases in the sense that Phase I data collection for the second country will begin after the Phase II "utilization" activities begin in the Dominican Republic. The major activities of Phases I and II are listed below:

Phase I:

I. A. Arrange study procedures, plan of study, administration, staffing and logistics.

1. Develop necessary interagency agreements, understandings, fiscal arrangements and working procedures for the conduct of the study

2. Organize space, support, equipment and other logistics.

3. Develop detailed plan of study, time schedule, job assignments and network diagram for study management.

I. B. Review trained manpower situation and institutional structure in DR and recommend amounts and types of training and institutional changes needed to insure successful internalization.

I. C. Develop detailed methodology.

1. Document study theory, data needs, definitions, assumptions and generalized flow chart of the information gathering, editing, storage and reporting process.

I. D. Survey U. S. agency files and library sources and assemble relevant data and information sources for DR and the second country.

I. E. Conduct in-country reconnaissance of DR; survey data sources; establish contacts, arrangements, and working procedures; coordinate procedures and data needs with sector project and other planning efforts, document details for field reconnaissance and data collection.

I. F. Assemble ERTS photos and tapes, topo maps and coordinate map base and data, and prepare preliminary overlays of mapping materials for DR

1. Prepare base topo map

2. Obtain ERTS photography and tapes, geometrically correct and calibrate with base map.

3. Print out land use/cover data and interpret in preliminary manner.

4. Explore the possibility of locating sector sample farms in ERTS base to compare ground truth with computer interpretation.

5. Interpret base data, reconnaissance information and past country soil effort in terms of pedological classification; extrapolate where necessary, using principles of soil genesis and compile a preliminary pedological soil overlay.

6. Prepare soil description and ecological - zone parameters in narrative and tabular form to accompany map.

7. Develop available information to map and/or tabulate such resource development potentials as wetness, flooding, remoteness, salinity, etc.

8. Evaluate water availability and correlate to map and/or tabulations.

I. G. Arrange and conduct field surveys, in-country review of preliminary material and finish data collection in DR

1. Review map overlays of SA's, CZ's and DP's with in-country counterparts, incorporate local data, field inspect samples of map, check data gaps, and adjust overlays to final draft of maps.

2. Develop list of currently grown and potentially adaptable crops, estimate farming techniques and cultural practices used under the various assumptions, coordinate productivity differentials among soils and problem areas and assemble necessary data.

3. Collect necessary production, yield, cost, etc., data for system.

4. Interpret ERTS imagery into current land use tabulations, correlate with sector sample data and obtain other information as necessary.

I. H. Develop computer system.

1. Develop documentation of the detailed computer system needs.

2. Develop and document the necessary computer coding system for all data elements.

3. Develop and test forms for data collection and key punching.

4. Determine edit needs, parameters and procedures.

5. Design table formats for edit and inventory reports.

6. Survey computer programs for suitability, modify and identify remaining gaps.

I. I. Process, edit, collate, store, display ,and analyze inventory data.

1. Complete final map overlays of soil associations, climatic zones and constraint and development potentials.

2. Digitize overlays on ERTS tape.

3. Print out base tape with data forms for developing data inputs.

4. Develop cropping patterns, normalize to published totals and develop normalized yields.

5. Estimate yield change under other technology assumptions.

6. Prepare enterprise budgets.

I. J. Prepare Phase I inventory and data analysis report, maps and input to analytical system for Dominican Republic.

1. Assemble all methodology and procedure statements into a documentation of the theoretical system.

2. Assemble all relevant base data collected and used into a data appendix.

3. Document data procedures, programs, codes, edits, and programs.

4. Prepare a data inventory and analysis of data system as assembled.

5. Consolidate all relevant information into a Phase I Methodology, Procedure and Inventory Report.

I. K. Identify data needs/gaps in the DR and recommend activities/programs to remedy these deficiencies.

I. L. Repeat step I. B for country II.

I. M. Repeat step I. E for country II.

I. N. Repeat step I. F for country II.

I. O. Repeat step I. G for country II.

I. P. Repeat step I. I for country II.

I. Q. Repeat step I. J for country II.

I. R. Repeat step I. K for country II.

Phase II.

There are 5 operational steps in Phase II. These steps are to be carried out in-country, first in the Dominican Republic and then in country II. Back-stopping for the in-country specialists will be provided by the central staff in the U.S. The first three months of the time of the in-country technicians will be spent with the central staff in U.S. becoming familiar with data base and computer systems used for data analysis. The Early part of in-country work is focused on calibrating, the Phase I data system and acquainting host country planners with the CRIE System. Once calibrated the system is utilized in sector analysis work. The results are then reviewed and presented in a final report. More specific activity descriptions follow:

II A. Data Preparation in DR.

1. Review inventory data in-country, revise and compare inventory totals with published secondary totals for consistency in DR.

2. Make revisions and adjustments as necessary to calibrate the system.

3. Prepare final inventory reports and input data documentation showing production data, production totals, and input requirements with constant, and single TO assumptions.

II B. Adopt System to DR data.

1. Prepare programs necessary to generate analytical matrix.

2. Using final data from II. A, generate matrix and design initial assumptions and data for production demands, constraints, etc.

3. Run initial analytical system.

4. Prepare report writer routines.

5. Analyze and review initial runs, adjust if necessary and rerun if necessary.

II C. Finalize and Report initial results in DR.

1. Calibrate baseline solution with results and data in sector system and coordinate as necessary.

2. Formulate a joint analysis problem to evaluate in recursive steps through both models.

3. Analyze, document and report results.

II D. Internalize System in DR.

1. Assemble inventory and analysis from II. A and output reports from II. B and II. C into a review document.

2. Conduct review seminars in-country and with other cooperators and interested groups to demonstrate results, amd capabilities, and collect relevant assumptions and alternatives to design additional runs.

3. Collect necessary input data for additional TO's defined in 2 and rerun model within time and fund constraints.

II E. Finalize Internalization and final report for DR.

1. Prepare, edit, review, and print final report.

2. Establish model and expertise in-country and arrange for continuing use and refinement, if possible.

These steps in Phase II will be repeated in the second Latin American Country.

Illustrative target dates for the completion of Phase I and II steps are presented in Annex II based on an assumed June 21 starting date. Additional details on the actovoty design are found in Annex III.

G. Activity Soundness

The fact that many such analyses of U.S. agricultural resource response and potential have been and continue to be analyzed with linear programming models similar to the ones described previously attests to the fact that the scientific community considers this approach sound. In addition, much work of a simulation nature and time-series analysis in the U.S. is linked to this process to provide more complete analysis. This is entirely consistent with the intent of this activity to link resource evaluation to sector analysis. Further, such systems have wide acceptance throughout the developed world. For example, the Forest Range Environmental Study Task Force (developers of the FREPAS model previously mentioned) have recently assisted the Australian Government in establishing the system and developing the model for policy planning.

The land base will be classified according to soil taxonomy of the National Cooperative Soil Survey. This will make the foundation of the system compatible with soils work in U.S. universities, international agencies and U.S. and foreign government work. As a result, project outputs will be universally compatible and widely adaptable without expensive and time-consuming conversions. In addition, the land base will be incorporated into the latest satellite photography and technology so that emerging research in satellite scanning of soils, crops and other factors can be immediately incorporated into the system. Crop criteria and nomenclature also will be developed consistent with international standards.

H. Environmental Impact

The activity will have no direct environmental impacts. However the data generated are extremely useful in evaluating environmental changes in resource use and conditions that result from alternative programs and policies. Furthermore, by expanding the data collection effort to include environmental condition coefficients (erosion, wildlife habitat, wetlands, etc.) the environmental impact of alternatives can be incorporated into the analysis, as it has been in many similar systems in the U.S.

In accordance with U.S. Governmental and USDA policy, women will be afforded every opportunity to participate in the activity without discrimination.

## III. BUDGET AND ADMINISTRATIVE ARRANGEMENTS

### A. Budget Plan and Financing Schedule

The total cost of the project is estimated 4o be $1,269,200 over a four year period of which AID would provide $1,081,800, USDA $140,900 and NASA $46,500. We propose to fund the project initially for two years with funding for the third and fourth years contingent on the outcome of an evaluation during the second year of the project. Three agencies would participate in the project: AID, USDA, and NASA. The agency distribution of costs for the four years are estimated as follows:

| | Year | | | | | |
|---|---|---|---|---|---|---|
| Agency | 1st | 2nd | 3rd | 4th | Total | % |
| AID | $210.0 | $308.2 | $327.0 | $236.6 | $1,081.8 | 85.2 |
| USDA | 43.9 | 46.5 | 50.5 | -- | 140.9 | 11.1 |
| NASA | 26.5 | 20.0 | -- | -- | 46.5 | 3.7 |
| | 280.4 | 374.7 | 508.3 | 236.6 | $1,269.2 | 100.0 |

The details of the budget plan and agency contributions are shown in Table A for the entire four years. The discussion of the following section explains the location of activities, staffing, and administrative arrangements.

TABLE A. PROPOSED STAFFING PATTERNS, SALARIES AND BENEFITS (000 $)

ANNEX B

| TYPE | TITLE | YEAR 1 MM | YEAR 1 COST/MM | YEAR 1 AID | YEAR 1 OTHER | YEAR 2 MM | YEAR 2 COST/MM | YEAR 2 AID | YEAR 2 OTHER | YEAR 3 MM | YEAR 3 COST/MM | YEAR 3 AID | YEAR 3 OTHER | YEAR 4 MM | YEAR 4 COST/MM | YEAR 4 AID |
|---|---|---|---|---|---|---|---|---|---|---|---|---|---|---|---|---|
| | a. Project Dev. Component | | | | | | | | | | | | | | | |
| I. | LEADERSHIP STAFF | | | | | | | | | | | | | | | |
| FT | Program Leader | 12 | $3.0 | | ERS 35.1 | 12 | $3.1 | | ERS 37.2 | 12 | $3.4 | | ERS 40.4 | | | |
| FT | Agr'l Economics Leader | 12 | 2.5 | 30.8 | | 12 | 2.8 | 32.2 | | 12 | 3.1 | 36.9 | | | | |
| PT | System Analysis | 6 | 1.0 | 6.7 | | 6 | 1.4 | 8.2 | | 6 | 1.4 | 8.9 | | | | |
| PT | Soil Science | 4 | 2.8 | 11.2 | | 4 | 3.0 | 12.0 | | 1 | 3.2 | 3.2 | | 1.0 | $3.4 | 3.4 |
| PT | Plant Science | 2 | 2.8 | 5.6 | | 2 | 3.0 | 6.0 | | 1 | 3.2 | 3.2 | | 1.0 | 3.4 | 3.4 |
| II. | CONSULTANTS | | | | | | | | | | | | | | | |
| ST | Agr'l Economics | 1 | 2.4 | 2.4 | | 1 | 3.0 | 3.0 | | 1 | 3.0 | 3.0 | | 3.0 | 3.4 | 10.2 |
| ST | Systems Analysis | 1 | 2.4 | 2.4 | | 1 | 2.5 | 2.5 | | 1 | 2.7 | 2.7 | | 2.0 | 2.9 | 5.8 |
| ST | Hydrology | 1 | 2.4 | 2.4 | | 1 | 3.0 | 3.0 | | | | | | 2.0 | 3.4 | 6.8 |
| ST | Climatology | 1 | 2.4 | 2.4 | | 1 | 3.0 | 3.0 | | | | | | | | |
| PT | Plant Science Student | | | 5.0 | | | | 6.0 | | | | | | | | |
| ST | Remote Serving | 4 | 2.8 | | NASA 11.2 | 2 | 3.0 | | NASA 6.0 | | | | | 1.0 | 3.4 | 3.4 |
| III. | SECRETARIAL & CLERICAL | | | | | | | | | | | | | | | |
| FT | Clerk-Secretary | 12 | 0.9 | 10.8 | | 12 | 1.0 | 12.0 | | 12 | 1.1 | 13.2 | | | | |
| | SUBTOTAL | 56 | | 79.7 | 46.3 | 54 | | 87.9 | 43.2 | 46 | | 71.1 | 40.4 | 10.0 | | 33.0 |
| | b. In-Country Utilization and Integration Component | | | | | | | | | | | | | | | |
| IV. | FIELD STAFF | | | | | | | | | | | | | | | |
| FT | Agr'l Economics (OR) | | | | | 12 | 3.0 | 35.0 | | 12 | 3.1 | 37.2 | | 6.0 | 3.4 | 20.4 |
| FT | Agr'l Economics (II) | | | | | 1 | 2.5 | 2.5 | | 12 | 2.7 | 32.4 | | 12.0 | 2.9 | 34.8 |
| FT | Clerk-Secretary (OR) | | | | | 12 | 0.5 | 6.0 | | 12 | 0.6 | 7.2 | | 6.0 | 0.7 | 4.2 |
| FT | Clerk-Secretary (II) | | | | | 1 | 0.5 | 0.5 | | 12 | 0.6 | 7.2 | | 12.0 | 0.7 | 8.4 |
| | SUBTOTAL | | | | | 26 | | 44.0 | | 48 | | 84.0 | | 36.0 | | 67.8 |
| I - IV | TOTAL | 56 | | 79.7 | 46.3 | 90 | | 131.9 | 43.2 | 94 | | 155.1 | 40.4 | 46.0 | | 100.8 |
| V. | SUPPORT ACTIVITIES | | | | | | | | | | | | | | | |
| | International Travel | | | 15.7 | | | | 16.2 | | | | 18.0 | | | | 10.0 |
| | Domestic Travel | | | 9.6 | | | | 9.0 | | | | 9.0 | | | | 5.0 |
| | Rent, etc. | | | 6.0 | | | | 6.0 | | | | 6.0 | | | | 6.0 |
| | Printing and Publications | | | 1.0 | | | | 1.0 | | | | 1.0 | | | | |
| | Supplies and Materials | | | 4.0 | | | | 2.0 | | | | 5.0 | | | | 3.0 |
| | Equipment | | | 2.0 | | | | 0.5 | | | | 0.5 | | | | 0.5 |
| | Other | | | | | | | | | | | | | | | |
| | ERTS | | | 5.0 | 10.0 | | | | 10.0 | | | | | | | |
| | Topo Maps | | | 5.0 | | | | 5.0 | | | | 5.0 | | | | 5.0 |
| | Programming | | | 10.0 | | | | 10.0 | | | | 5.0 | | | | 5.0 |
| | Computer | | | 15.0 | | | | 25.0 | | | | 16.0 | | | | 20.0 |
| | Contingencies | | | 15.0 | | | | 20.0 | | | | 17.0 | | | | 30.0 |
| | Moving Costs | | | ---- | | | | 20.0 | | | | 20.0 | | | | |
| | SUBTOTAL | | | 88.3 | 10.0 | | | 114.7 | 10.0 | | | 06.5 | | | | 88.5 |
| I - V | GRAND TOTAL W/O OH | | | 168.0 | 56.3 | | | 246.6 | 53.2 | | | 261.6 | 40.4 | | | 189.3 |
| VI | OVERHEAD | | | 42.0 | 14.1 | | | 61.6 | 13.3 | | | 65.4 | 10.1 | | | 47.3 |
| I - VI | GRAND TOTAL | | | 210.0 | 70.4 | | | 308.2 | 66.5 | | | 327.0 | 50.5 | | | 236.6 |

B. Staffing, Administration and Situs.

This activity involves considerable diversity of agencies, staff locations and interests, but with a commonality of purposes, as described elsewhere. Successful implementation of the activity depends in large part on adequate administrative coordination between the vatious agencies, between technical staff at the various locations, and attention to realization if the expectations of all parties in terms of outputs.

1. Staffing. There are three categories or groupings of professional staff involved in the activity.

a. Those "core" positions that provide the professional leadership to the activity throughout its life (leadership staff).

b. Those specialist positions that are required to deal with specialized problems (consultants).

c. Those technical positions in-country required for providing the professional linkages to the utilization and integration process (internalization) and to provide the in-country professional leadership for developing the local staff and organizational capability to assure continued utilization of outputs (systems and processes) beyond the life of the activity.

Leadership staff involvement must be sufficient and over a long enough period of time to assure the depth and continuity of professional inputs required for linking various disciplines into a comprehensive data system.

The activity leader must dedicate full-time to the activity and be responsible for its day-to-day conduct, monitor and record progress, coordinate the various inputs and forward plan utilization of inputs over time. The agricultural economics leader will have leadership responsibility for the analytical aspects of the activity. He must assure that all analytical "pieces" contributed by the professional staff are additive and are integrated into the inventory system. He will be required to dedicate full-time to the activity during the first year, and at least half-time thereafter. Other leadership staff are: (a) a system analyst, (b) a plant scientist and (c) a soil scientist. Each of these staff members will be required to dedicate at least half-time to the activity.

Because the data must be obtained primarily in-country and the utilization of the system will be in-country, both leadership staff and consultants will need to spend considerable time in-country. An exception may be the system analysis leader in year one when programming and computerization will be in the U.S. As computer facilities become available in-country and the computer system is put on tapes, computerization will be shifted to the cooperating countries.

This is expected to occur in year two for the Dominican Republic and year three forCountry II. As this shift occurs, the systems analysis leader will spend more time in-country.

2. Activity Situs in U.S.

Certain key members of the leadership staff must work closely together on almost a daily basis. These key staff must be located at the site of the computer and programming facilities to be utilized in the activity. There are indications that the particular types of computer and programming capabilites, as well as range and availability of secretarial and clerical talent (and perhaps some of the professional specialists, such as the systems analyst) required for this project are more likely to be available (and at a lower cost) at certain universities experienced in modeling and foreign data analysis work (such as Michigan State University, Iowa State University and University of Nebraska).

The decision as to the primary U.S. Situs of the activity will be made at later date based on considerations of facilities and cost. In any event, whatever situs is chosen, the following key leadership staff must be located there:

a. Program Leader

b. Agricultural Economics Leader

c. Systems Analysis Leader

3. Staff Presence In-country

As described in another section, the effective utilization in-country of the system and processes to be developed under this activity is considered to be a critical element of the project itself. In order to assist this internalization activity, not only must a substantial amount of leadership staff and consultant time be spent in-country, but, in addition, it is considered to be necessary to have one full-time resident technician in each cooperating country once the initial data have been assembled and combined into a preliminary comprehensive system. This is expected to occur early in activity year two for the DR and shortly after mid-year of activity year two in Country II.

The budget estimates include positions for these in-country technicians and some support costs. It is expected that USAID and collaborating country agencies will provide some logistic support, such as office space, in-country travel, etc.

USAID and collaborating country agencies also have a strong interest in both on-the-job training and formal academic specialization in activity-related

areas. As specified in the implementation schedule, an early effort will be determination of manpower needs for internalization of the system and processes generated by under the activity. USAID is expected to finance the academic training involved, while the collaborating host country agencies will allocate sufficient resources to assure local institutionalization of the system by the end of the activity.

Conversations have been held with USAID and government officials in the Dominican Republic. Certain arrangements were discussed and tentatively agreed upon. The Mission has the capability and seems willing to provide necessary local travel arrangements, light periodic secretarial service, photocopying, and other critical logistic support. The activity budget covers the cost of vehicles and/or space needed for any lengthy period of time. Ministry of Agriculture personnel also indicate an interest in and willingness to cooperate with the activity. The Secretariat in the Ministry of Agriculture has expressed a desire to designate counterparts to work with the activity team. The Secretariat also is interested in training additional personnel, partly in the United States, to utilize this and other planning techniques (sector analysis) more effectively. Several other projects (other than sector analysis) are underway in the Dominican Republic and complement this activity. Among the more relevant are the land utilization portion of Agricultural Sector Loan II, Soil Mapping by Dr. Peter Arens, FAO, and a Land Use Study by Dr. Peterson, FAO. Careful coordination will be necessary to avoid interference or duplication.

3. Administrative Support and Coordination Arrangements

Funding arrangements and administration among the USDA agencies will be documented and supported by a USDA Plan of Work in accordance with normal procedures. Arrangements between USDA and NASA will be covered by a Memorandum of Understanding and/or documents deemed necessary by the respective administrators.

Management of the activity within USDA will be coordinated by the activity leader as chairman of a USDA Management Committee, with SCS and ARS representation by the senior soils and plant science leaders, respectively. An expanded committee will serve as the coordination mechanism among agencies in the host country USDA, AID and cooperating universities. It is expected that this mechanism will be adequate to insure in-country coordination of inputs and interests of USDA, AID, USAID and collaborating country agencies.

Any special arrangements within ERS for the cooperation, division of responbility, exchange of data and modeling results, interaction with other USDA and cooperating agencies, and single or joint reporting or results between the Sector Modeling Project in DR and this activity will be documented in a joint Memorandum of Understanding and/or Plan of Work as usual ERS procedures prescribe. Copies of this document will be provided to cooperating agencies so that necessary working relationships can be accomplished.

USDA contributions, progress and arrangements will be monitored and described in the USDA Plan of Work supporting job responsibilities, sequence, timing, products and funding arrangements. Accountability, direct supervision, personnel services and support will be a function of the individual agencies.

Progress of the activity will be reviewed annually to assure that critical target dates are met. A major evaluation of the activity will be held at the end of the second year. Particular attention will be focused on the extent to which the inventory and data analysis system is being used and internalized in the Dominican Republic.

4. Review Procedures

Technical and Administrative review of the project will be carried out at the end of 12 months, 18 months, 36 months and upon completion of the project. Participants for this review will be selected from the USDA, NASA, cooperating universities and LDC institutions, AID/LAB and AID/TAB.

The 12-month review will evaluate: the development of a detailed methodology to document study theory, data needs, definitions, assumptions and generalized flow chart of the information gathering, editing, storage and reporting process; the adequacy of the project design, data collection procedures and the preliminary data evaluation; and the development and evaluation of the computer system for suitability.

At the completion of 18 months, review will take place to ascertain the completion of the Dominican Republic resource base report which is the first step toward internalization of the project.

At the completion of 36 months, review will take focus on whether techniques have been integrated with sector analysis and Dominican Republic planners. This review will also exercise the development of a resource base report for the second Latin American country which will be at the second evaluation stage by this time.

The final review will be at the end of the fourth year to ascertain the completion of the second country and to review the success of internalization in both countries. The system will be considered to be a success if, at the completion of the project, country sector analysis personnel developed the capability to maintain, refine and utilize the system on a continuing basis.

ANNEX II.

ACTIVITY TARGET DATES

(Dates assume June 20, 1976 start)

| | | |
|---|---|---|
| I.A | Sept. 1, 1976 | Detailed plan of work completed |
| I.B | Oct. 1, 1976 | DR manpower situation reviewed |
| I.C | Nov. 1, 1976 | Methodology documented |
| I.D | Dec. 1, 1976 | Complete survey of U. S. sources |
| I.E | Jan. 1, 1977 | Complete in-country reconnaissance in DR |
| I.F | Mar. 1, 1977 | Assemble DR data |
| I.G | Apr. 1, 1977 | Cross-check DR data in country |
| I.H | June 1, 1977 | Complete computer system for DR data |
| I.I | Sept. 1, 1977 | Process and analyze DR inventory data. |
| I.J | Dec. 1, 1977 | Complete DR resource report |
| I.K | Jan. 1, 1978 | Identify data gaps in DR and recommend remedies |
| I.L | Feb. 1, 1977 | Manpower situation in Country II reviewed |
| I.M | Feb. 1, 1978 | Complete in-country reconnaissance in Country II |
| I.N | April 1, 1978 | Assemble Country II Data |
| I.O | May 1, 1978 | Cross-check Country II data in country |
| I.P | July 1, 1978 | Process and analyze Country II Data |
| I.Q | Sept. 1, 1978 | Complete Country II resource report |
| I.R | Oct. 1, 1978 | Identify data gaps in Country II and recommend remedies |

End of Phase I Activities (Oct., 1978)
Start of Phase II Activities (June, 1977)

| | | |
|---|---|---|
| II.A | Jan. 1, 1978 | Complete calibration of system in the DR |
| II.B | Apr. 1, 1978 | Test system in DR |
| II.C | Mar. 1, 1979 | Use system in DR sector analysis |
| II.D | Apr. 1, 1979 | Review system in DR |
| II.E | June 30, 1979 | Final Report for DR |
| II.F | Jan. 1, 1979 | Complete calibration of system in Country II |
| II.G | Apr. 1, 1979 | Test system in Country II |
| II.H | Mar. 1, 1980 | Use system in Country II sector analysis |
| II.I | Apr. 1, 1980 | Review system in Country II |
| II.J | June 30, 1980 | Final Report for Country II |

AID 1020-20 (1-73)

# DESIGN SUMMARY
## ACTIVITY LOGICAL FRAMEWORK

Life of Project:
From FY _____ to FY _____
Total U.S. Funding _____
Date Prepared: _____

Project Title & Number: _____

| NARRATIVE SUMMARY | OBJECTIVELY VERIFIABLE INDICATORS | MEANS OF VERIFICATION | IMPORTANT ASSUMPTIONS |
|---|---|---|---|
| Program or Sector Goal: The broader objective to which this project contributes: 1. To assist developing countries to identify & analyze the consequences of alternative policies, programs & prospects for agricultural & rural development in terms of their own multiple economic & social goals. 2. To improve the information & analytical basis for making decisions on agricultural & rural development strategies, policies & investments. 3. To expand the number & enhance the capability of developing country planning personnel to construct & use such an information base & analytical system. | Measures of Goal Achievement: 1. Techniques of agricultural sector analysis--including techniques for evaluating the resource potential of a developing country--developed & in use in one or more countries. | 1. Countries conduct agricultural sector analyses, support them with funds & personnel and consider "strategies" recommended by these techniques in this decision making process. | Assumptions for achieving goal targets: 1. Agricultural sector analysis continues to be a priority undertaking for AID, the governments in the two pilot countries and other developing countries. |
| Project Purpose: 1. To select & apply techniques for collecting, classifying, collating & documenting data on a country's land & water resources, land use, production inputs & expected outputs, production costs, technology options & institutional constraints. 2. To establish a system, using existing data mgt techniques & analytical processes, for evaluating these data. 3. To demonstrate the analytical capabilities of this system & test the reliability & usefulness of the results. 4. To develop procedures for linking the resource data & analytical system into a sector analysis. 5. To internalize the techniques developed as part of the project. | Conditions that will indicate purpose has been achieved: End of project status. 1. The data & analytical systems fully developed & tested in two countries. 2. These systems linked with an overall model in at least one country. 3. The internalization process completed in both test countries. | 1. Documents describing the data management & analytical system, how the system is used & some of its applications completed. 2. Data bank, including information on land and water resources, production levels & costs, technology options & institutional constraints available to planners in the two test countries. 3. Agricultural sector analysis--including the resource data and analytical system--continues after project phase out. | Assumptions for achieving purpose: 1. Good estimates of resource potentials will improve sector analyses. 2. The data management & analytical systems developed in two countries will be generalizable to all developing countries. 3. Sector analysis work is underway in at least one of the test countries |
| OUTPUTS 1. A data management & analytical system capable of evaluating the resource/production potential of a developing country. 2. A data bank, including information on land & water resources, production levels & costs, technology options & institutional restraints, for each of the two test countries. 3. Selected analyses of resource constraints, production potentials, resource development programs, etc. for the two test countries. 4. In-country capability to construct & use this system in the two test countries. | Magnitude of Outputs: Outputs as specified will either be achieved or they won't be. They can only be evaluated qualitatively. | See block above | Assumptions for achieving outputs: 1. Necessary data on land & water resources, production inputs & outputs, production costs, technology options & institutional constraints available in country or can be generated within the time frame & budget constraints of the project. 2. ERTS photo available which covers enough area in enough detail. 3. Data management techniques & analytical systems developed and used in US are applicable. 4. Suitable counterparts with basic training are available or |
| INPUTS See Budget | Implementation Target (Type and Quantity) See Budget | Day to day contact, expenditure receipts, vouchers, etc. | arrangements will be made outside this project to develop the necessary capability. Assumptions for providing inputs: 1. Personnel with required expertise available. 2. Cooperating institutions (ERS, ARS, SCS, NASA) make the agreed upon contribution (See Budget). |

3/30/76

204

## CRITICAL PERFORMANCE INDICATORS FOR THE ACTIVITY

| CPI# | Month | Illustrative Date | Action |
|---|---|---|---|
| 1 | 1 | July 76 | Start activity |
| 2 | 3 | Sept. 76 | Work Plan Complete |
| 3 | 6 | Dec. 76 | U.S. Data Survey Complete |
| 4 | 10 | April 77 | DR " " " |
| 5 | 12 | June 77 | Computer system complete |
| 6 | 12 | June 77 | Long-term DR Technician on-board in U.S. |
| 7 | 15 | Sept. 77 | DR data processed |
| 8 | 15 | Sept. 77 | Long-term DR technician in DR |
| 9 | 19 | Jan. 78 | DR system calibrated |
| 10 | 22 | Apr. 78 | DR system tested |
| 11 | 22 | Apr. 78 | Country II data assembled |
| 12 | 24 | June 78 | Long-term Country II technician on-board in U.S. |
| 13 | 27 | Sept. 78 | Country II data processed |
| 14 | 27 | Sept. 78 | Long-term Country II technician in Country II |
| 15 | 31 | June 79 | Country II system calibrated |
| 16 | 34 | April 79 | Country II system tested |
| 17 | 34 | April 79 | Review of system in DR complete |
| 18 | 36 | June 79 | Final report for DR complete |
| 19 | 46 | April 80 | Review of system in Country II complete |
| 20 | 48 | June 80 | Final Report for Country II complete |

ANNEX II

ACTIVITY PERFORMANCE TRACKING NETWORK CHART

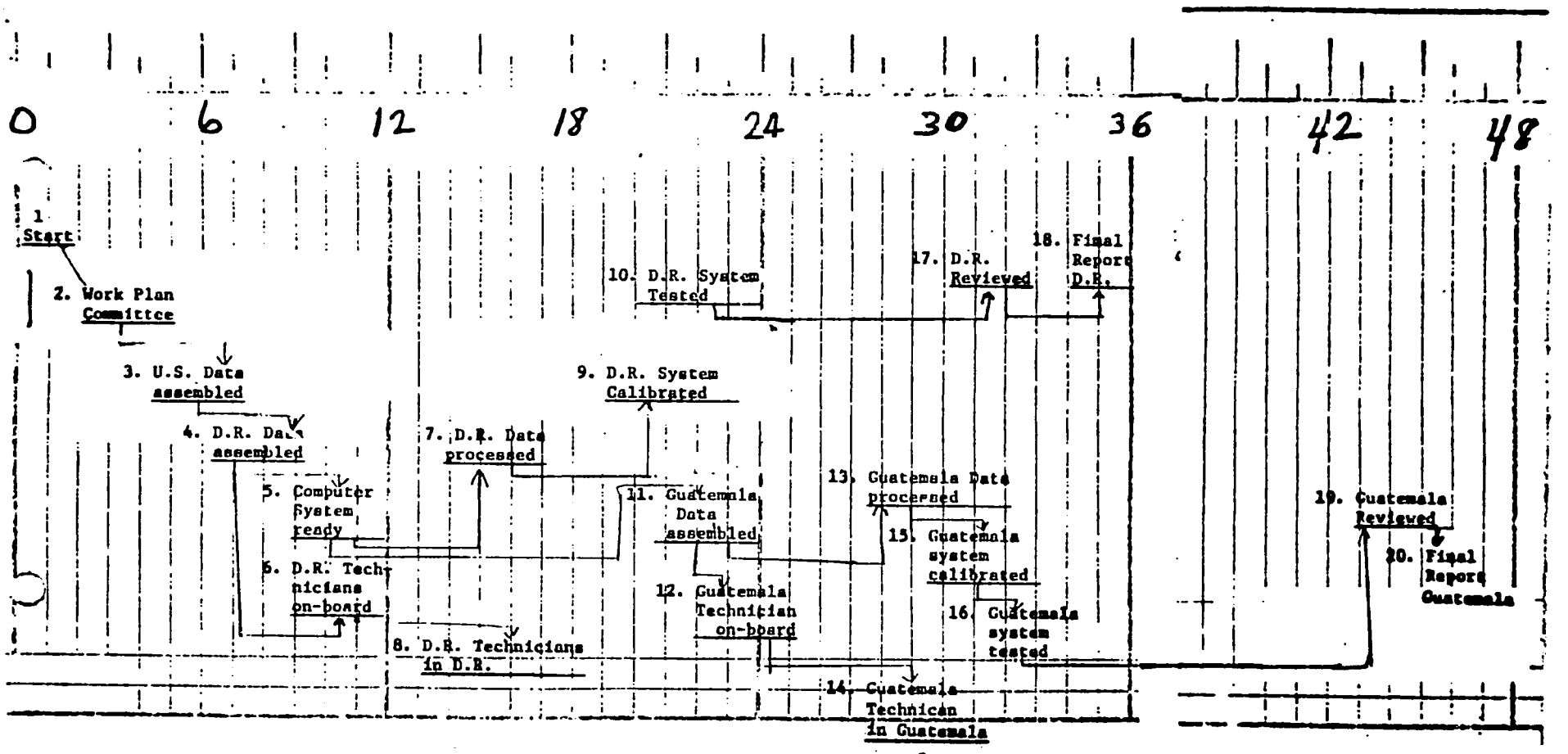

ANNEX III

SYSTEM DESIGN

Investigation of agricultural production possibilities and resource potentials involves consideration of many factors. The ecological production process, in reality, encompasses an infinite array of land resource-product combinations. This array is further complicated by a wide range of policy, management, technology, institutional and market options.

The structure of the system proposed, Comprehensive Resources Inventory and Evaluation System (CRIES), is similar to several basic land resource analytical systems developed by ERS. The underlying technique of each is linear programming. More importantly, however, is the unified, systematic framework of resource inventories imposed by these systems to incorporate and stratify major factors in the production process into discrete ranges for which single estimates can be made. In this way, the infinite production process can be generalized to accommodate computer limitations, so that complex interactions of production possibilities are simultaneously considered. The usefulness of the system depends upon the ability to stratify and incorporate enough major factors to simulate reliable estimates of actual production adjustments which might be expected in the agricultural sector from exogenous changes such as prices, demands and/or institutional policies.

The CRIE System, as depicted in Figure 1, establishes a unified framework of land inventory, vegetative options, technological and institutional possibilities, production responses and economic costs suitable for a wide range of in-country applications, yet within reasonable bounds of computational capacities. The system is flexible with respect to user needs and suitable for country analyses in fullest available detail. The objective of the system is to assemble existing data and information from several disciplines into a single, unified data bank which can provide a systematic approach to data storage, simulation, and analysis.

The following sections present the definitions, assumptions, and specifications of the general system.

Land Inventory

The supply, quality and location of land resource factors will be identified on a series of overlays on a base map prepared from currently available editions of topographic maps at a scale of 1:1,000,000 (approximately 16 miles per inch). The factors which will be mapped in the overlays are soil associations (SA), climatic zones (CZ), and selected inherent constraints and development potentials (DP). The combination of overlays will identify unique resource production units (RPU) that are defined as geographic areas of land, usually several thousand hectares in extent, that are characterized as having similar patterns of soil, slope, climate, water resources, type of farming, productivity, problems and potentials. RPU's may occur as one continuous area or as several separate but nearby areas. Some RPU's will be

further subdivided into slope, problem, development and/or other relevant parameters (which are too dispersed for map delineation) by dividing the total area of mapping units into more detailed units. At this level of detail, RPU's can be depicted by single valued estimates of agricultural inputs and outputs which provide reliable analytical results for regional and national planning purposes.

The SA overlays will be developed by revising existing soil maps, using all available documented information about soils of the study area, supplemented by field reconnaissance and consultation with local soil scientists. Soils will be classified in categories of Soil Taxonomy, the system of soil classification used by the National Cooperative Soil Survey and applicable to soil classification on a worldwide basis. In addition to kinds of soils, the nature of underlying materials and topographic features on which the soil associations occur will be identified. Each map unit on the SA overlay will be described in terms of important component soils.

While there is a high correlation between soils and climate of the areas where they occur, a more explicit evaluation of climatological data supplemented by techniques of correlating natural vegetation, cropping, and weed patterns will be made, and an overlay of climatic zones (CZ) will be prepared. These climatic zones will consider altitude, seasonal and annual rainfall, temperature, growing season, and other parameters relevant to plant growth and adaptability. In most cases, these boundaries will be coextensive with SA's, but climatic subdivisions will be established if necessary.

Other physical parameters to be incorporated into the land inventory are inherent conditions which exert constraints on land use and productivity (wetness, flooding, salinity, etc.), resource development potentials (irrigation, land clearing, etc.) and such selected institutional constraints as lack of transportation. Large enough contiguous areas to be mapped will be identified on the overlays. Others of a more dispersed nature such as upstream flood plains, scattered wetlands, clearing and potential irrigated areas will be estimated as portions of RPU's for data purposes without precise map location.

The final parameter considered, water, will be analyzed in terms of quantity and quality available for supplemental irrigation. It will be mapped and screened for proximity to suitable soils on a case-by-case basis and added and evaluated as a development potential where appropriate.

To complete the land inventory and transfer the data to computer tape, ERTS (LANDSAT) imagery will be prepared and geometrically corrected to the standard base used for soil mapping. This will provide a base map and computer tape of major land use and cover (urban, agricultural, forest, etc.) with as much sub-detail (cropland, pasture, forest type and density, etc.) as possible in the major agricultural categories.

While ERTS imagery is available by pictals at a detail of one pictal per 0.44 hectares (1.1 acres), various sampling techniques will be tested and employed to

FIGURE 1.

CRIES

COMPREHENSIVE RESOURCES INVENTORY AND EVALUATION SYSTEM

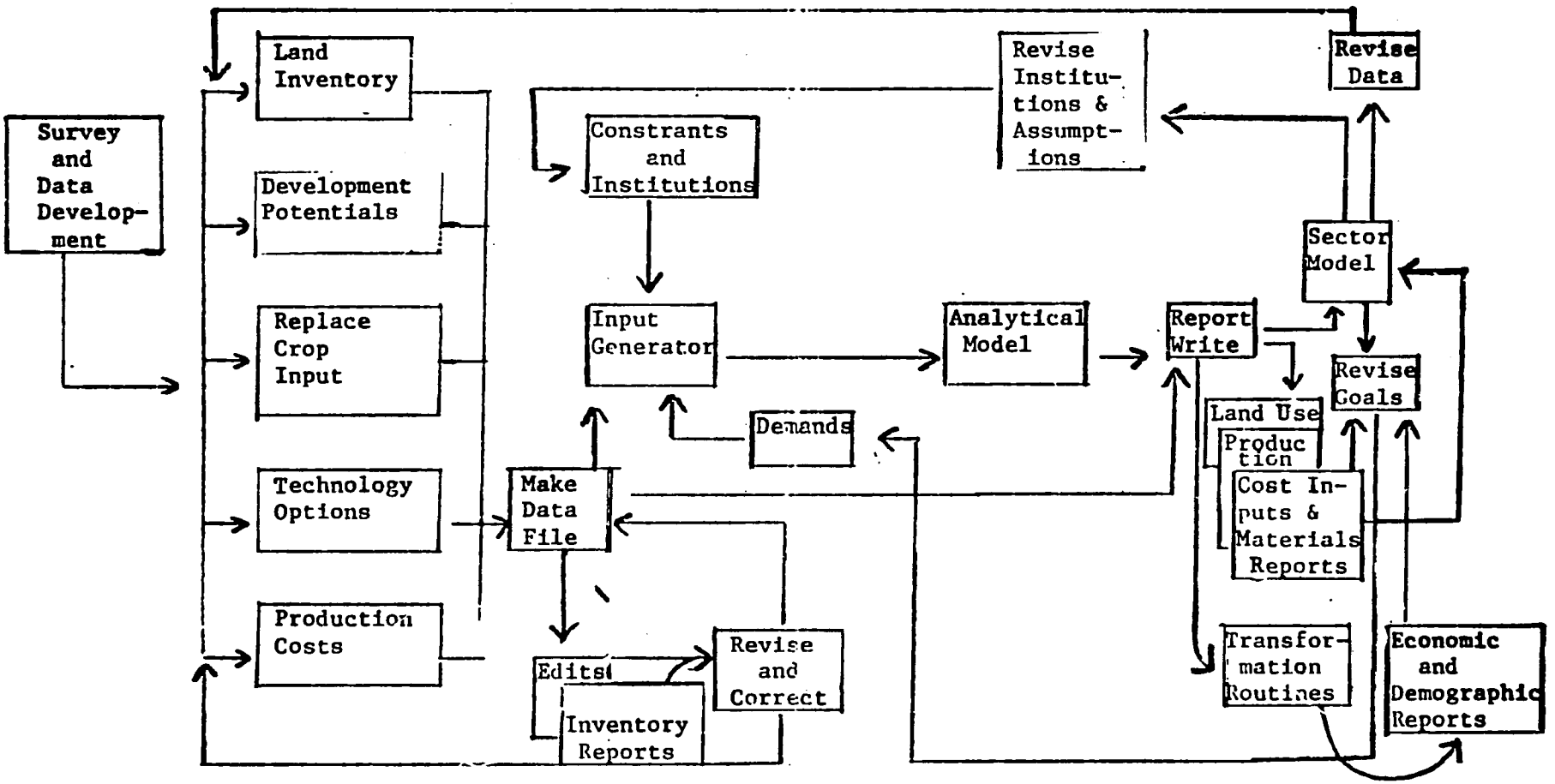

summarize the detail to a 1 sq. mi. level and/or standard metric base unit. Soil, climate, and problem overlays will be digitized and coded on the ERTS tape. The final inventory tape will have political boundary, SAC, CZ, DP, cover and/or use codes for each square mile of land. For analytical purposes, this tape can be summed to total acres (and/or appropriate international metric units) by use and/or cover and political unit for each RPU.

The system will accommodate region and country for aggregate analysis, with sub-country options to match sector modeling regions in country analysis. This feature will be coded and defined as appropriate to fit the Dominican Republic and Country II planning regions.

Once completed, the resource inventory will provide the foundation and coordination of the data inventory and evaluation system. The basic building blocks of all analyses will be resource production units, as previously defined and described. The balance of the system will be coefficient files, which depend upon the homogeneity and uniqueness assumption in the resource inventory for theoretical soundness. Coefficient files will be on separate computer tapes but coded the same as the land inventory tapes for rapid computer matching and processing.

Technology Options

The second major factor that must be stratified into finite groups with unique single-valued estimates is the bundle of production factors exercised in the management, policy, and technology area. The system will create four basic technology levels suitable for both in-country analysis and multi-country aggregation.

Within areas of the world, the level and mix of management and technologies may vary widely and their in-country analytical needs may also be quite different. To meet these needs, benchmark levels of technology options (TO) will be described in criteria which will make comparison of results between Dominican Republic and Country II possible. Within these criteria, country specifics and assumptions underlying the technical coefficients will be more precisely defined and documented.

The baseline TO's and the criteria imposed on both countries are:

TO 1 - Current technology as practiced by typical average farmers in the individual country.

TO 2 - The technology level used by the best few (10%) farmers.

The country specifics of these TO's will very likely be different and will be documented. However, they are based on a real (and known) level and will aggregate to comparisons between countries that are useful and definable. The details of the system will be carefully studied before the final criteria are specified and final decisions will be based upon close coordination with the sector analysis project and upon the results of seminars held with the appropriate kinds of experts.

In addition, the system will accommodate additional TO's defined even more precisely to meet in-country analytical needs and policy questions as interaction with sector systems is explored. Technology options (TO's) may be defined, and technical coefficients estimated, to reflect the simulated production response to the removal of single, or combinations of, institutions. For example, drastic changes in price relationships among inputs (fertilizer or machinery subsidies, for example) and outputs, land use changes, increasing farm sizes, and government subsidies on large machinery are but a few that could be defined as new technology assumptions (TO's) and tested in the system. Options such as describing TO-1 to the cross-sectional detail of representative farms in the sector system will be explored. Development potentials such as drainage, land clearing, and irrigation can also be evaluated.

Crop Activities

ERTS cover/use data, local information, sector data and on-the-ground reconnaissance will be used to disaggregate land use totals to cropping patterns of individual crops by RPU. Relative productivity among RPU's will be estimated from soils information and other available local data. This system will then be adjusted to national acreage and production totals which are constructed from annual data for recent years. These totals will depict reasonable expectations of plantings and production for a typical year with annual variations removed. The resulting system of acreage and yield estimates for individual crops by RPU will correspond to the TO-1 assumptions. This estimate can be verified for reasonableness by published country data for total output and can be shown to reflect the best ordinal judgment, experience and research available with respect to soil and region differentials. A considerable effort will be made in this process to document the sources of these data and appraise their relative quality so that (at least judgment) estimates can be assigned to the reliability of production estimates and technical coefficients obtained.

A study by plant scientists will be made to computer match climatic zone data for test countries with ecological and pedological regime data throughout the world to determine adaptability and potential output of new crops in the area. In the initial phase, only the two basic benchmarks will be added to this information base until in-country analysis and/or sector modeling interaction reveals other relevant situations to test. Heavy reliance will be placed on in-country analysis and resources to document and estimate cultural practices, levels of inputs, development potentials, cropping details, weed control, chemicals, etc., that are needed. Data sources will be carefully documented so that quality evaluations can be made.

Price Assumptions

The project is proposed as an analysis of supply potential based upon a series of assumed conditions. Demand and price assumptions are both critical in such an analysis. No empirical work in the demand or price elasticity area is proposed in this editing but related work will be surveyed and incorporated to the extent possible.

In the initial stages of the project, current country prices will be computed to furnish a price base assumption for project purposes. In-country analysis will be made with this price base to estimate the supply potential at these prices and potential increases available from development opportunities at alternative price levels. In addition, the data base will be designed so that alternative price bases and relative mixes of prices of inputs and/or outputs can be injected into the analytical system to evaluate their impact on supply.

Production Budgets

For each TO/crop/RPU combination identified and defined in technical detail, a production cost will be estimated. Existing sector data, local data and research, and extrapolation of judgment and experience from similar areas will be used to estimate the relative costs among areas, options, and production possibilities.

The data will be prepared by enterprise elements, whenever possible, to adapt data procedures to existing computerized budgeting systems in ERS. These systems do automatically the combination, computation, and assembly of budget elements into a format adaptable to the analytical system. The process materially reduces the work involved and retains the information in a readily retrievable and updatable form for rapid refinement, use, and summarization.

Production Goals

The analytical system combines land resources and crop possibilities in a way that allows the minimum production cost combination of meeting specified production goals. The level and mix of production goals must be specified by the user in units of individual commodities. Options can vary from current production levels to larger and larger goals, until they exhaust the economic and, finally, the physical potential of the resources. Again, this activity will rely heavily on the sector project for appropriate test production levels.

System Constraints

Many factors, other than the costs of production specified in the budgets, influence land use and production response in the agricultural sector. Such things as crop rotations, social costs and desires, personal choices, institutional constraints and others are difficult to reflect. Bounds on solution values are frequently used to control linear programming algebra from computing adjustment which are unrealistic and unobtainable in the "real" world. Systems such as this will rarely produce solutions for the current time period that are entirely similar to the actual land use picture. Prudent users, however, can derive valuable policy information and directions by judicious use and interpretation of analytical results. One great value of this system is that it can be used as a simulation system to quickly compute production results of constant assumptions.