Department of Health

BILATERAL TUBAL LIGATION BY MINILAPAROTOMY UNDER LOCAL ANESTHESIA

Participant's Handbook

2013

BILATERAL TUBAL LIGATION BY MINILAPAROTOMY UNDER LOCAL ANESTHESIA

Participant's Handbook

FOREWORD

The Department of Health, with its commitment to the delivery of quality care in family planning services, is strengthening the training system in acquiring knowledge and skills. In line with this, the training manual on Training on Bilateral Tubal Ligation By Mini-Laparotomy under Local Anesthesia (MLLA) has been updated with the goal of implementing a national standardized training of health workers across all regions in the country. It is expected that with the revised training manual on MLLA, service provision on MLLA will improve performance indicators on FP and subscribe to the achievement of quality FP services for the conduct of training on female voluntary surgical contraception. The updated evidence-based information on voluntary surgical sterilization (VSC) technique was adapted to further enhance service provision.

The manual contains the important topics and essential components of teaching and learning the standardized MLLA technique. The topics include counseling, voluntary decision making thru informed consent, the surgical procedure, provision of local anesthesia, infection prevention and control, post-operative and management of complications. The overall objective of the manual is to build the competence on the knowledge and skills of health providers on female sterilization by MLLA anchored on a more receptive, responsive and sensitive attitude towards future clients or acceptors.

I encourage the dissemination and use of this manual by health service providers in the conduct of training to expand the provision of VSC services for females through increased number of competent BTL-MLLA providers across the country to address the unmet need for women of reproductive age, thereby contributing to the attainment of MDG 5 under Universal Health Care.

ENRIQUE T. ONA, MD, FPCS, FACS
Secretary of Health

ACKNOWLEDGEMENT

The Department of Health acknowledges stakeholders and partners who have contributed their time and expertise to the development of this training manual on mini-laparotomy under local anesthesia. Their input and expertise have contributed significantly in shaping the performance and quality improvement approach in this manual.

The MLLA Technical Working Group contributed to completing this manual. They are:

- Dr. Cynthia Garcia, Consultant
- Dr. Francis Floresca, Private Sector Mobilization for Family Health – Phase 2 Project, USAID
- Dr. Rebecca Ramos, Health Policy Development Program, USAID
- Dr. Jocelyn Ilagan, Health Policy Development Program, USAID
- Dr. Esmeraldo Ilem, Jose Fabella Memorial Hospital
- Dr. Luis Garcia, Jr., Friendly Care
- Dr. Gerardito Cruz, Consultant
- Dr. Cesar Maglaya, Consultant
- Dr. Bernabe Marinduque, University of the Philippines – Philippine General Hospital
- Dr. Edna Abcede, Center for Health Development (CHD) – Central Luzon
- Dr. Casimiro Bacugan, Region I Medical Center

The Department of Health enjoins all to ensure the successful utilization of this standard training manual in the development of good quality BTL-MLLA service providers in both public and private sectors. This manual serves as the resource manual in achieving the DOH goal of provision and quality voluntary surgical sterilization services through the established training system across the country.

The following were also consulted for their inputs, sharing of their experiences as service providers as well as support from CHD staff:

- Dr. Cherry Pangilinan, Vicente Sotto Memorial Medical Center
- Dr. Distancy Montejo, St. Anthony Maternal and Child Health
- Dr. Gay Gonzales, Zamboanga Medical City
- Dr. Jun Boto, Jose Rodriguez Memorial Hospital
- Ms. Aurora Doria, PHO, Pangasinan
- Ms. Teresita dela Cruz – CHD Central Luzon
- Dr. Jovette Guinal – CHD Central Visayas
- Ms. Armi dela Cruz – CHD Ilocos

JANETTE LORETO-GARIN, MD, MBA-H
Undersecretary of Health
Support to Service Delivery Technical Cluster IV

ACRONYMS

AO	Administrative Order
BTL	Bilateral Tubal Ligation
CCT	Conditional Cash Transfer
CHD	Center for Health and Development
COCs	Combined Oral Contraceptives
DOH	Department of Health
FP	Family Planning
GIDA	Geographically Isolated and Disadvantaged Area
HLD	High Level Disinfection
IUD	Intrauterine Device
LCE	Local Chief Executive
LAPM	Long Acting and Permanent Method
LGU	Local Government Unit
MNCHN	Maternal and Newborn and Child Health And Nutrition
MLLA	Minilaparotomy under Local Anesthesia
MDGs	Millennium Development Goals
NHTS	National Household Targeted Survey
NBB	No Balance Billing
NSV	No Scalpel Vasectomy
PHO	Provincial Health Office
PHIC	Philippine Health Insurance Corporation
STIs	Sexually Transmitted Infections
VAWC	Violence Against Women and Children
VSC	Voluntary Surgical Contraception
WHO	World Health Organization

TABLE OF CONTENTS

SESSION TITLE		PAGE
	Training Design	6
Session 1	Introduction	13
Session 2	Orientation to Counseling	20
Session 3	Verification of Informed Consent	26
Session 4	Prevention of Infection	31
Session 5	The Surgical Team	46
Session 6	Preparation for Surgery	53
Session 7	The Local Anesthesia Regimen	65
Session 8	Emergency Preparedness	76
Session 9	The Surgical Procedure	83
Session 10	Post-operative Recovery and Discharge	114
Session 11	Management of Complications	120
Session 12	Follow-Up	130
Session 13	Action Plan	133

Annexes

Annex A. Instruments and Supplies for MLLA *139*

Annex B. Medical Eligibility Criteria for Female Sterilization *141*

Annex C. Performance Checklist on Minilaparotomy under Local Anesthesia *150*

Annex D. Checklist for MLLA Service Requirements (Self-Assessment) *157*

TRAINING DESIGN

Course Description

This five-day competency-based clinical skills training course is designed to enable the trainee to perform standardized bilateral tubal ligation by minilaparotomy under local anesthesia (BTL/MLLA) procedure in their FP service provision. The course consists of didactic sessions and practicum phase spread out in the five-day duration. The first three days are conducted at the training site where didactics and practicum are conducted. The last two days are onsite practicum. The practicum for the BTL/MLLA technique involves demonstration and return demonstration using pelvic models proceeding with actual clients after competency in the models is attained.

Goals

The goal of the training course is to have a pool of BTL/MLLA service providers equipped with:

- knowledge, skills and attitude in performing the standard procedure of BTL/MLLA;
- knowledge and skills needed to prevent, recognize and manage complications related to the BTL/MLLA procedure; and
- knowledge, skills and attitude to integrate BTL/MLLA services into their existing service delivery system.

Specific Objectives

At the end of this five-day course, the trainee will be able to:

- apply the principles of counseling and informed consent for BTL/MLLA;
- explain the indications and precautions for BTL/MLLA based on the WHO Medical Eligibility Criteria for contraceptive use;
- practice infection prevention measures in the provision of BTL/MLLA services;
- perform complete screening evaluation of BTL/MLLA clients including pelvic examination as part of assessment;
- perform with competency the standard BTL technique of minilaparotomy under local anesthesia;
- recognize and manage surgical and anesthesia-related complications;
- provide routine follow-up management of side effects and other health problems related to minilaparotomy under local anesthesia; and
- develop an action plan on the integration of BTL/MLLA services into his/her practice.

Training/Learning Methods

- Illustrated lectures and discussions
- Individual and group exercises
- Case studies
- Demonstration and return demonstrations
- Simulated practice with anatomic (pelvic) models
- Guided clinical activities on pre-operative assessment and minilaparotomy under local anesthesia

Training Materials

- Facilitators' Guide
- Participants' handbook which also serves as a reference manual
- Powerpoint slides
- Pelvic models (ZOE) for simulated practice
- Minilaparotomy kits

Trainers

Trainers of the course must be obstetricians or surgeons in CHD-accredited training institutions/facilities who are:

- Proficient in performing abdominal/pelvic surgeries and are skillful in preventing and managing surgical complications
- Proficient in performing DOH standard BTL/MLLA procedure.
- Proficient and committed to providing training on BTL/MLLA
- Willing to coach trainees during their practicum and post-training monitoring and follow-up in their respective facilities
- Certified trainers on BTL/MLLA

Training site

- Training sites are CHD-accredited FP training centers particularly for VSC with certified trainers on BTL/MLLA.
- Training sites should have available clients for the practicum phase.

Trainees Selection Criteria

Trainees to this course must be doctors of medicine with experience in performing abdomino-pelvic surgery and who are:

- Affiliated with facilities where BTL/MLLA can be performed in accordance with DOH standards.
- Supportive of Family Planning, interested in being trained on BTL/MLLA and committed to regularly performing BTL/MLLA after the training.

Methods of Evaluation

Trainee

- Attendance
- Pre- and post-test
- Participation in discussions
- Performance of the skills on BTL/MLLA using the "Performance Checklist on Minilaparotomy Under Local Anesthesia"

Course

- Course evaluation accomplished by participants

Course Duration

The course duration will be for five days with didactic and practicum sessions spread out within the five-day course. The training site should ensure that there are enough clients for BTL/MLLA (at least 10 intervals and five postpartum clients for the course duration) for competency-based learning. In scheduling training, there should be collaboration with the CHD/PHO regarding demand generation to meet the case load during training or for that matter for the trained team to start up service provision in their catchment area.

Course requirement includes:

- Minimum number of cases prepared[1]
- Number of trainees will depend on the number of trainers and case load.
- The training institution in coordination with CHD and PHO will prepare at least five intervals and five postpartum clients.

Suggested Course Composition

- 1:5 trainer/trainee ratio during the didactic part

[1] Applicable even for competency-based training

- 1:1 trainer/trainee ratio during the clinical practice on actual clients
- Minimum of three and maximum of five trainees (depending on the number of trainers and case load)

Post-training Monitoring and Evaluation

A post-training monitoring and evaluation is conducted two months after training to assess the performance of the trainee. The purposes of this follow-up are to:

- Assess the on-the-job performance of the trainee
- Provide technical assistance to improve the knowledge and skill of the trainee
- Support the trainee and help resolve problems or answer questions
- Recommend for certification trainees who are able to satisfactorily apply learned skills
- Evaluate the results of training on the inclusion of BTL/MLLA services in the trainee's facility (e.g., increase in client load for FP, utilization of services)

The frequency of conducting the evaluation depends on the need of the trainee and of his/her facility towards successful integration of quality BTL/MLLA services.

Certification

A **Certificate of Competency** is awarded by the training institution to trainees who have satisfactorily and competently completed the requirements of the five-day course (i.e., complete attendance, passing score in the post-test, and satisfactory skills rating based on the skills checklist as observed during the BTL Day practicum in his/her site). The regional director, the chief of hospital of the training institution and the trainer will be the signatories of the certificate.

After the post training monitoring and evaluation, a certificate as service provider will be issued upon successful integration of BTL/MLLA into his/her professional practice in her affiliated hospital/s. For the certificate to be issued, the provider should have performed at least 30 procedures in three months.

After training, two to three sets of minilap kits are distributed per facility. These should be issued to their institutions, not to the service provider. Retractors and uterine elevators should be routinely included in the BTL kits.

If competency is not achieved within the five-day course as a service provider, the trainee should be provided with more case load either in the training institution or in their own facility until the desired level of competency is reached and certificate of competency can be given. A certificate of attendance will temporarily be issued after the five-day training course if the skills requirement were not met.

Program of Activities

Time	Activities
DAY 1	
8:00 – 8:30AM	Registration
8:30 – 9:00	Opening Program • Welcome Remarks • Pre-test • Introduction of Participants • Levelling of Expectations & Norms • Course Design
9:00– 9:30	Courtesy Call on the Chief of Hospital Tour of the OB Department, FP Clinic, and the Operating Theatre
9:30-11:00	Session 1: Introduction
11:00-12:00	Session 2: Orientation to Counseling
12:00-1:00 PM	LUNCH BREAK
1:00-1:30	Session 3: Verification of Informed Consent
1:30-4:00	Session 4: Prevention of Infection
4:00-5:00	Session 5: The Surgical Team
DAY 2	
8:00 – 8:15AM	Invocation Recap of Previous Day's Activities
8:15-9:15	Session 6: Preparation for Surgery
9:15-10:45	Session 7: The Anesthesia Regimen
10:45-11:15	Session 8: Emergency Preparedness
11:15-12:00	Session 9: The Surgical Procedure (Suprapubic Approach)

Time	Activities
12:00-1:00 PM	LUNCH BREAK
1:00-2:00	Session 9: The Surgical Procedure (cont'd) Practice on Zoe Models the "Suprapubic Approach"
2:00-3:00	Session 9: The Surgical Procedure (Subumbilical Approach)
3:00-4:00	Session 9: The Surgical Procedure (cont'd) Practice on Zoe Models the "Subumbilical Approach"
4:00-4:30	Session 10: Post-operative Recovery and Discharge
4:30-6:00	Session 11: Management of Complications
DAY 3	
8:00 – 8:15AM	Invocation Recap of Previous Day's Activities
8:15-12:00	PRACTICUM WITH ACTUAL CLIENTS: Observation and coaching using the ML-LA Performance Checklist at the Operating Room • Client Assessment • Performing BTL/MLLA
12:00-1:00	**LUNCH BREAK**
1:00-2:00	Session 12: Follow-Up
2:00-5:00	Plenary discussion of cases during practicum • Case History • Operative Technique • Difficulties/Issues
	Session 13: Action Planning, post-test, course evaluation
DAY 4	

Time	Activities
ON SITE PRACTICUM WITH ACTUAL CLIENTS: Observation and coaching using the BTL/MLLA Performance Checklist during a BTL day at the trainee's site • Client Assessment • Performing BTL/MLLA • Difficulties and issues	

Time	Activities
DAY 5	
ON SITE PRACTICUM WITH ACTUAL CLIENTS: Observation and coaching using the BTL/MLLA Performance Checklist during a BTL day at the trainee's site • Client Assessment • Performing BTL/MLLA • Difficulties and issues	

Session 1

INTRODUCTION

OVERVIEW

Worldwide, female sterilization is used by 33% of married women using contraception, making it the most common contraceptive method for couples who desire permanent limitation of pregnancy. Tubal ligation is a good option for women seeking out a safe, effective, permanent and convenient form of contraception. Bilateral tubal ligation is the most common form of surgical sterilization procedure for tubal occlusion.

This session provides the service provider with basic information on BTL to enable him/her to provide accurate, evidence-based information on BTL/MLLA which is the DOH-approved standard procedure.

LEARNING OBJECTIVES

At the end of the session, the participants will be able to:

1. Discuss basic information on BTL
    - What it is
    - Mechanism of action
    - Effectiveness
    - Possible side effects
    - Warning Signs of Complications
2. Describe minilaparotomy as an efficient approach to BTL
3. Explain the reason for preferring MLLA for BTL
4. Provide evidence based facts in responding to myths on BTL

NARRATIVE

BILATERAL TUBAL LIGATION

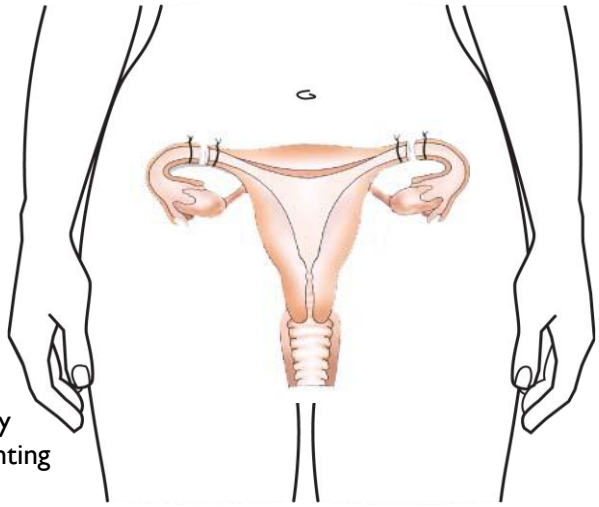

BTL is known as female sterilization as it provides permanent contraception for women who do not want any more children. It is a safe and simple surgical procedure to tie and cut the two fallopian tubes located on both sides of the uterus. The fallopian tubes carry eggs from the ovaries to the uterus. With the fallopian tubes blocked, the woman's egg cannot meet the man's sperm.

The effectiveness of BTL depends partly on how the tubes are blocked but pregnancy rates are very low. The procedure is 99.5% effective in preventing pregnancy.

BTL has the following advantages:

- Permanent; a single decision leads to lifelong, safe prevention of pregnancy
- Nothing to remember, no supplies needed, and no repeated clinic visits required
- No interference with sex; does not affect the woman's ability to have sex
- Increased sexual enjoyment because no need to worry about pregnancy
- Has no hormonal side effects
- No effect on breast milk
- No known long-term side effects or health risks
- Can be performed just after a woman gives birth (immediately and within seven days after childbirth)
- For interval cases, can be done six weeks after delivery
- Can be performed at any day of the menstrual cycle provided you are reasonably sure that the woman is not pregnant

However, it has the following disadvantages:

- Requires minor surgery
- Considered to be permanent as reversal surgery is difficult, expensive and success cannot be guaranteed
- If pregnancy happens (very rare), there is a greater risk for ectopic pregnancy compared to women who have not undergone the procedure
- Does not protect against sexually transmitted infections including HIV/AIDS

There are no long-term side effects of BTL. A common side effect is pain over the operative site which diminishes in a day or two.

Problems affect women's satisfaction with BTL. It is, therefore, important that the service provider attends to clients complaining of warning signs of complications and immediately refer her to a facility or health service provider who can assess and address her complaint.

WARNING SIGNS

- Bleeding, pain, pus, heat, swelling or redness of the wound that becomes worse or is persistent. These are signs of infection of the incision site.
- High grade fever is a sign of more severe infection.
- Fainting, persistent light-headedness, or extreme dizziness
- Missed period, which signifies pregnancy

MINILAPAROTOMY UNDER LOCAL ANESTHESIA FOR BTL

Minilaparotomy is a modified and simplified version of conventional laparotomy which was developed so that bilateral tubal occlusion services could be safely provided efficiently and at minimal cost. It is a safe, effective, flexible technique that can be performed on an outpatient basis under local anesthesia, and is appropriate for interval and postpartum tubal occlusion.

Interval cases are performed when the client is not pregnant (from at least 42 days after the last delivery). This greatly expands the opportunities for performing the procedure, however, timing is important to minimize the risk of undetected pregnancy. The procedure can be performed at any time the service provider is reasonably sure that the client is not pregnant.

Postpartum tubal ligation offers the advantage of convenience. The client is usually already in the facility where the procedure will take place, and recovers simultaneously from both the procedure and delivery without significant increase in discomfort and or length of stay. The decision to undergo postpartum tubal ligation should be made prior to the onset of labor whenever possible; information about this option should be a part of routine prenatal counseling. Postpartum clients may be transported to a facility where this procedure can be performed if there are no conditions that call for a delay or require precautions that the facility cannot handle. Timing issues for this procedure take into consideration the need to assess the condition of both mother and child after delivery, and the increasing difficulty of the procedure with time. Ideally, the procedure takes place within 48 hours postpartum. The uterine fundus is close to the umbilicus at that time, within reach of a subumbilical incision, and hospital stay is not prolonged. The procedure is possible up to the sixth day postpartum although the site of incision will vary depending on the level of the uterine fundus. Because the procedure becomes difficult with increasing contraction of the uterus, tubal ligation is not recommended from seven to <42 days postpartum.

Minilap tubal ligation can also be performed immediately or up to two weeks following a first trimester abortion if there are no signs of infection or other possible complications, and the uterus is no larger than 12 weeks in size. For second trimester abortions, it is necessary to wait until the uterus has involuted sufficiently – in general, after four weeks.

All candidates for minilaparotomy will require a standard medical screening, including complete history, physical examination, and assessment for anemia. Clients undergoing interval or post-abortal procedures will need to have a bimanual examination, which is usually not necessary in women immediately postpartum.

ADDRESSING COMMON MYTHS ON BTL

Acceptance of this safe and effective method, like the BTL, depends on the service provider being able to respond adequately to myths on the method. Presented in the table below are common myths on BTL that the service provider must be able to counteract to provide correct information on the method. Recommended counseling messages are provided to guide the service provider in responding to these myths.

MYTH	FACT	COUNSELING MESSAGES
Causes irregular or heavier menstrual bleeding or amenorrhea	Most researches find no major changes in bleeding patterns after BTL. If a woman was using a hormonal method or IUD before sterilization, her bleeding pattern will return to the way it was before she used these methods. For example, women switching from combined oral contraceptives (COCs) to BTL may notice heavier bleeding as their monthly bleeding returns to usual patterns. Note, however, that a woman's monthly bleeding usually becomes less regular as she approaches menopause.	• Menstrual periods will continue because this procedure does not remove the uterus and the ovaries. It only affects the tubes. • Menstruation comes from the uterus. • BTL does not affect menstrual bleeding since the ovaries are still functional and the uterus produces normal monthly periods. Problems of menstrual bleeding are usually caused by a hormonal imbalance, which is the result of a change in a woman's health and her psychological feelings. • Changes could be caused by obesity, menopause, or hormonal imbalances. • For older women irregularities are more likely due to the normal aging process, not because of sterilization. For women who used COCs prior to sterilization, irregularities may be due to the transition from regulated to non-regulated cycles. Evidence, to date, does not support any biological explanation for an association between tubal ligation and subsequent menstrual or other gynecological problems. • Cessation of menses occurs as a result of age-related hormonal

MYTH	FACT	COUNSELING MESSAGES
		changes (menopause) or as a result of the surgical removal of the uterus or both ovaries.
Only women of a certain age or who have a certain number of children can undergo BTL	All women can undergo BTL safely with proper counseling and informed consent. There is no justification for denying sterilization to a woman because of her age, the number of her pregnancies or living children, or her marital status. Health care providers must not impose rigid rules about age, number of children, age of last child, or marital status. If a specific woman's situation suggests to a provider that she could have regrets later, the provider should help the woman think through her decision carefully. Ultimately, however, each woman must be allowed to decide for herself whether or not she will want more children and whether or not to undergo sterilization.	• This is not true. BTL is for women who do not want any more children, have completed having the number of children they desire, and for health reasons (that is, for women where pregnancy is not recommended for medical reasons). • BTL is a safe procedure for most women, even if they are old or young, have just given birth, have only one or no children or they are still breastfeeding. Women must consider their choice because BTL is a permanent contraceptive method, which means once she decides to undergo sterilization, she will never have a child in the future. • The method can be used at any age, but the client must be absolutely sure that she doesn't want any more children before she chooses sterilization because it is generally not reversible. If the client has doubts, she can use other temporary methods of contraception. • BTL is a personal decision. It is up to the woman to choose the method. Any woman who meets the medically accepted conditions may undergo the procedure. According to the World Health Organization (WHO), there are no medical reasons that permanently restrict eligibility for sterilization. However, there are medical conditions that may limit when, where, or how the BTL procedure should be performed.
Causes a decrease or loss of sex drive or	After sterilization, a woman will look and feel the same as before. There is no loss of sexual drive	• There is no evidence to prove that BTL affects one's sexual desire. A comfortable intercourse is usually

MYTH	FACT	COUNSELING MESSAGES
sexual ability	or interest after BTL. She can have sex the same as before. She may find that sex is more enjoyable because she does not have to worry about getting pregnant.	related to the environment and a person's physical and mental health. • Sexual desire is a mental or psychological process and is hormone dependent. The female sex hormones which affect sexual drive are produced and released by the ovaries. When a woman undergoes sterilization, it is only her tubes that are blocked. Her other functions remain perfectly the same. In most cases, sexual pleasure increases due to freedom from the anxiety of pregnancy. • Because there won't be any intervention in the genital organs and sex hormones, there will not be any changes in your sex drive and sexual pleasure. • The most common problem of sexual dysfunction is a psychological problem. For perimenopausal women, sexual function may be due to a disturbance or hormonal changes.
Causes long-term health risks (e.g., chronic pain and hormonal imbalance)	There are no documented long-term medical side effects of BTL. The few complications that do occur during or following sterilization, such as infection or abscess of the wound, can generally be kept to a minimum if appropriate techniques are used and if performed in an appropriate setting. Local anesthesia is best for BTL because it has lower risks of complications than use of general anesthesia. Female hormones are not affected by BTL, and there will be neither a loss of femininity nor any change in sexual functioning.	• Sterilization is a simple surgical procedure that involves tying or severing the fallopian tubes so that the egg/ova and sperm are unable to meet and fertilize. The procedure does not cause long-term effects such as backache, weakness, or other illnesses or side effects. If the client experiences any of these symptoms long after the procedure, she should be referred for further evaluation. These may be due to other medical conditions that need to be investigated. • Backaches and abdominal pain are due to many other reasons. BTL does not cause such problems and the majority of women feel better after this procedure because they

MYTH	FACT	COUNSELING MESSAGES
		are permanently free from the repeated threat of pregnancy. • BTL is only a minor procedure and the side effects are just minimal after the operation. It doesn't cause health risks or side effects that may result in hysterectomy, poor health, pain or hormonal imbalances. • The most common side effect, if it can be referred as such, is regret due to a poor decision made by the couple. • BTL is a surgical procedure, not a hormonal contraceptive. Although the tubes are cut, there is no hormone produced or released from that part. It means your hormone function remains as usual. • BTL does not cause any health problem apart from infertility.
Causes changes in weight (i.e., loss or gain)	Sterilization does not cause any changes in weight, appetite, or appearance. However, older women are more likely to choose sterilization for contraception than younger women and most women gain weight as they age.	• Weight changes are related to diet and lifestyle (less activity). Many women gain weight or lose weight without having BTL. In general, some women may experience weight changes at an older age due to metabolic changes. • Weight gain may also be related to the feeling of ease due to the release from the fear of pregnancy.

Session 2

ORIENTATION TO COUNSELING

OVERVIEW

For women who no longer desire fertility, BTL is a safe and highly effective option. However, future regret in undergoing permanent contraception among clients may be encountered. It is, therefore, important that clients are counseled properly. With appropriate client selection and counseling, this problem is minimized.

This session provides the service provider with adequate information on proper counseling to minimize regret after undergoing BTL.

LEARNING OBJECTIVES

At the end of the session, the participants will be able to:

1. Define FP counseling
2. State the benefits of counseling
3. Explain the responsibilities of the counselor
4. Discuss service delivery requirements related to counseling (e.g., who counsels, and when and where performed)
5. Discuss important steps in counseling clients for VSC
6. Explain characteristics of clients likely to regret
7. Clarify the concern on reversal

REFERENCE

Wilcox L.S., Chu S.Y., Eaker E.D., Zeger S.L., Peterson H.B. Risk factors for regret after tubal sterilization: 5 years of 5 years of follow-up in a prospective study. *Fertil Steril* 1991; 55: pp. 927–933.

NARRATIVE

WHAT IS FAMILY PLANNING COUNSELING?

Although this term has different meanings in different cultures, and in some languages the word does not exist, many would agree that the concept of family planning counseling includes four basic elements:

- It helps the client to make informed and voluntary decisions about fertility and contraception.
- It involves two-way communication between the counselor and the client.
- It provides information and helps the client apply that information to his or her individual needs and circumstances.
- It helps the client to safely and effectively use the contraceptive method he or she chooses.

Counseling family planning clients is a different way of communicating for many health providers. Doctors, nurses, and other professionals with medical or health training are accustomed to giving advice to patients who need treatment. Unless there is health reason precluding a method of contraception, the choice of a method is a matter of personal preference. Counseling is more than just giving clients information. It requires asking questions and listening. It involves two-way communication and aims to help clients make their own decisions. Counseling should be objective, and the counselor should avoid expressing bias for or against any family planning method. Motivation should not be confused with counseling. Motivation is subjective; its messages consist of information emphasizing the benefits of what method is being promoted.

It is acceptable to motivate people to use family planning in general, but it is not acceptable to promote only one particular method. This violates the individual's right to make a decision and choose the best option for himself or herself. All staff can benefit from a basic understanding of the purpose of counseling and the importance of a client's right to informed choice.

WHAT IS INFORMED DECISION MAKING?

Informed decision making is the desired result of the counseling process through which a client makes a well-considered, voluntary decision about contraceptive use. This decision should be based on options, information, and an understanding of the risks of pregnancy and sexually-transmitted infections (STIs) and the levels of protection provided by different contraceptive methods, including the understanding of relevant medical facts and the potential risks involved while using contraceptives- and, more importantly in the case of BTL, about the procedure and its effects and about the risks and benefits associated with the surgery. This information should be tailored to individual clients, filling gaps in their knowledge, correcting any misinformation, and addressing their questions and concerns. Clients should be able to make a real choice among contraceptive options that are offered and explained. They should also receive information about BTL's lack of protection against STIs, including HIV, and they should be aware that dual protection may be advisable in some situations.

WHY IS COUNSELING IMPORTANT?

Benefits for the Client

Helping the clients understand and resolve concerns related to contraception is important to ensuring s/he will make an appropriate choice. Studies have shown that clients are most likely to continue a

method and to use it correctly if they have chosen it themselves. Therefore, it is important for clinic staff to let clients select a method that they feel will work for them.

Counseling benefits clients interested in any kind of contraception (as well as other reproductive health concerns).

- It helps the client make an informed, voluntary, and well-thought decision.
- It can increase client satisfaction with the method plus continued use.
- It increases the likelihood that the client will use the chosen method correctly.

Counseling is particularly important for clients who are considering permanent methods.

- Clients considering sterilization are faced with making a decision that will permanently affect their fertility.
- Effective counseling helps minimize the possibility of postoperative dissatisfaction and regret.

Benefits to the Program

- Counseling improves the quality of the program.
- It can enhance the reputation of the program and its staff, which will help retain clients and attract new ones.
- It may contribute to higher rates of contraceptive continuation.

Family planning providers sometimes resist the notion of counseling because they believe their programs, already financially strapped and understaffed, cannot afford to allocate resources to this activity. The cost of providing counseling is ultimately less than the cost of not doing so. If family planning clients are not prepared for method side effects, they are likely to discontinue use and express their resulting dissatisfaction to friends and neighbors. If many clients who choose permanent contraception ultimately regret their decisions, this is likely to have repercussions in the community. In either circumstance, the family planning program's reputation will suffer, and clients will stop coming for services.

RESPONSIBILITIES OF THE FAMILY PLANNING COUNSELOR

A fundamental goal of every family planning program should be to have its clients make free and informed decisions about their fertility. Program staff must provide all family planning clients, including those interested in sterilization, with the information necessary to make a reasoned, voluntary decision about their fertility. The information must be in the language and terminology that the client can understand. The family planning counselor should encourage questions, and should answer them clearly and directly in terms the client can easily understand. Clients should know of the benefits and risks associated with those available temporary and permanent methods of contraception in which they are interested. The counselor should discuss effectiveness, and common side effects of these methods, to help clients determine the suitability of methods to meet their reproductive preferences and life circumstances.

It is the counselor's responsibility to do the following:

- Identify the client's reproductive and contraceptive goals.

- Gain insight into the client's medical, obstetrical, and contraceptive history and personal circumstances.
- Find out what the client knows about contraceptive methods.
- Provide whatever information the client lacks.
- Answer the client's questions and address his/her concerns.
- Help the client come to a decision about her fertility and contraceptive use.
- Identify and correct the client's misconceptions about methods.
- Help the client apply information about methods to her individual situation.
- Explain to the client how the contraceptive method she chooses will work and the proper use of the method.
- Ensure that the client is not making her decision because of pressure from any person, policy, or incentive.
- Explain to the client how she can get the contraceptive and refer if necessary.
- Ensure privacy and confidentiality.

SERVICE DELIVERY REQUIREMENTS RELATED TO COUNSELING

Who Can Counsel

A doctor, nurse, educator, or other health worker can be trained for and carry out family planning counseling. Effective counseling requires special training and good interpersonal communication skills. In programs offering sterilization services, regardless of who does the counseling, ensuring that the client has made a free, informed decision is ultimately the responsibility of the operating doctor.

Where Can Counseling Be Done

If at all possible, counseling should be conducted in a private area. Given the personal and confidential nature of information, which may be discussed, it is important to provide as much privacy as possible (limiting interruptions). Even where there are physical limitations to designating a private space, providers should try creative approaches to give clients privacy (for example, by using curtains, screens, outside spaces, low voices, etc.).

When to Conduct Counseling

Counseling may take place at any time the client desires and when the client is able to clearly comprehend the information. A client choosing minilaparotomy needs time to reflect on her decision before the procedure, and should not make the decision when her judgment may be impaired. As a rule, counseling is not appropriate or effective, nor should informed consent documents be signed, when a woman is sedated, in labor, or experiencing stress or pain before, during, or after a pregnancy-related event or procedure. It is preferable for clients interested in postpartum minilaparotomy to receive counseling well in advance of the pregnancy-related event. Clients desiring sterilization following spontaneous or induced abortion may need to delay the procedure unless they had decided on the sterilization well in advance of the abortion.

COUNSELING CLIENTS INTERESTED IN MINILAPAROTOMY

Counseling enables the provider to assess what the client knows about family planning, to fill in any gaps in information or correct misinformation, and to help the client reach a firm and comfortable decision. Counselors need to provide key information about sterilization, to ensure that clients clearly understand what it is, what it entails, its consequences, and the availability of alternative contraceptives to control fertility. Counselors should tell clients that minilaparotomy does not affect normal sexual function, physical health, or mental health. It is important to give clients information about possible risks and side effects, but without scaring the client. The counselor stresses the intended permanence of sterilization as well as the slight possibility and consequence of sterilization failure (that is, pregnancy). The counselor discusses what to expect during and after surgery. Finally the provider must assure the client that she can decide against the procedure at any point without prejudicing the staff or sacrificing her or her family members' right to other services.

Beyond providing information, the counselor should assess the client's psychological readiness to undergo minilaparotomy sterilization by listening to her carefully, with particular attentiveness to signs of doubt, conflict, misunderstanding, or unrealistic expectations about the procedure. In view of the critical and sensitive nature of this decision, it is essential that the counselor collect information from the client about her personal circumstances and feelings about ending her fertility.

CLIENT CHARACTERISTICS ASSOCIATED WITH REGRET FOLLOWING STERILIZATION

Below is the list of some characteristics clients may have that suggest they may need additional counseling, since these characteristics have been associated with a higher rate of regret. The counselor should not use these factors as arbitrary grounds for denying sterilization to a client. Rather, the counselor should view them as signals that the client requires further counseling to be sure the client weighs the choice of sterilization and its alternatives.

- Being young
- Having few or no children
- Having a spouse who disagrees with the decision for sterilization
- Being single or widowed
- Being pressured by a spouse or someone else to undergo sterilization
- Making the decision under unusual stress (e.g., during labor)
- Making the decision quickly, without time to reflect and reconsider
- Making the decision under influence of payments or other incentives
- Lacking access to other methods of contraception
- Being incompletely or incorrectly informed about sterilization
- Undergoing sterilization because of medical indications

It is also important for the counselor to identify clients who are indecisive about undergoing surgery or concerned about reversal, and to advise such clients to consider the decision further. The following points are important to consider:

- Reversal, if available at all, involves complicated and difficult surgery, requiring specialized skill.
- Some individuals who request reversal may be inappropriate candidates because of age, fertility impairments, spouse's infertility, or insufficient length of tube for reversal.

- Even for clients who are suitable candidates for reversal, and even when a highly skilled surgeon using the most advanced surgical technique performs the reversal procedure, functional success (term pregnancy) is variable with a high risk of ectopic pregnancy.
- Reversal procedures are costly, and the requester is usually responsible for the expense.
- Women who are advised to undergo sterilization because pregnancy poses a serious health risk for them are at high risk for regret. These women may not have chosen to end their fertility under other circumstances; thus, they need help to understand and accept why an end to childbearing is recommended. They must understand the dangers that pregnancy poses to them. Barring medical contraindications, effective, long-acting contraceptives—IUDs, injectables, Norplant implants, or vasectomy— should be presented as alternatives to women who do not want to undergo sterilization.

INVOLVING THE SPOUSE OR PARTNER

Because sterilization is intended to end an individual's ability to have children, it is wise for the counselor to speak to both the client and her partner, if possible and if desired by the client. Clients should always have some time alone with the counselor. However, spousal consent should not be a prerequisite for receiving services unless it is a legal requirement.

Session 3

VERIFICATION OF INFORMED CONSENT

OVERVIEW

Bilateral tubal ligation is considered a permanent method. As such, it is the service provider's responsibility to ensure that regret does not happen. The service provider must verify that the client has consented to undergoing the procedure based on important information to make a sound decision.

This session provides the service provider with adequate information on ensuring informed consent.

LEARNING OBJECTIVES

At the end of the session, the participants will be able to:

1. Define "informed decision-making" and "informed consent".
2. Explain the importance of informed decision-making and consent.
3. Explain the elements of informed consent.

NARRATIVE

INFORMED CONSENT AND COUNSELING

Counseling provides a client with information and an opportunity to discuss her decision about her fertility. Thorough counseling can help ensure that clients make free, informed, and well-thought decisions about their fertility. It is the staff's responsibility to furnish information the client needs to make such a decision, including information about ML/LA, other sterilization and anesthesia techniques offered, and other contraceptive methods. The staff must determine whether the client understands the consequences of, and is comfortable with, her decision. Staff must also determine if the client's choice is voluntary. Counseling also diminishes the possibility of regret after sterilization, which is more likely to occur when a client is not fully informed, has not considered the consequences of her decision, or has not requested the procedure voluntarily.

Documenting a client's informed consent is the final step in a process where the client has made a decision about a medical procedure, after weighing all the relevant facts. Documentation of informed consent takes place once the client has made a firm decision after counseling but before surgery.

Informed consent is the client's voluntary decision, based upon a complete understanding of the relevant facts, to undergo a medical procedure, such as minilaparotomy. Consent is *voluntary* when the client gives it of her own free will and without inducement, force, fraud, deceit, duress, bias, or other forms of coercion or misrepresentation. Any payment to the client must be carefully considered as to whether it constitutes an inducement. The client cannot be considered to have made an informed decision unless she understands the important facts related to minilaparotomy. It is imperative that the client understands that temporary methods of contraception are available to her and her partner. She must know that minilaparotomy is a surgical procedure, which entails certain risks and benefits. The client must also be aware that if the operation is successful, its effects are intended to be permanent and will prevent her from having children. Staff must also assure her that she can decide against the procedure at any time before the fallopian tubes are occluded, and that she will not sacrifice the right to other services at the clinic if she changes her mind.

INFORMED CONSENT: WHAT IT DOES NOT MEAN

Informed consent is ***not*** a replacement for counseling. The client's signature on an informed consent form alone does not ensure that she has requested the operation willingly or was fully knowledgeable of the facts and available options. A client who signs an informed consent form under duress, or without fully understanding what she is signing or the nature of the operation and its effects, has not given informed consent.

WHY IS INFORMED CONSENT IMPORTANT?

Properly administered informed consent procedures are important to the service provider, as well as to the client. In addition, they may help enhance the family planning program's acceptability and credibility by reducing the incidence of client regret. The signed consent document also helps protect the provider against allegations that the client did not choose

sterilization voluntarily or was uninformed about the procedure, its consequences, risks, and alternatives.

THE RESPONSIBILITY OF THE DOCTOR

By the time she meets the doctor, the minilaparotomy client should have received counseling about her contraceptive options, made an informed decision to undergo ML/LA, and has signed a consent form. Even though other staff may have counseled the client and obtained her signature on the form, it is the responsibility of the doctor to verify informed consent by talking with the client before the procedure. Before starting any part of the procedure, including administration of sedative drugs, the doctor must be certain that the client's decision is voluntary, informed, and well considered.

Below are the templates of Informed Consent Form (in English and Tagalog).

Informed Consent Form for Voluntary Sterilization

I, _____, the undersigned, request that Voluntary Surgical Sterilization – bilateral tubal ligation or vasectomy – be performed on my person. I make this request of my own free will, without having been forced or given any special inducement.

I understand the following:

1. There are temporary contraceptive methods available to me and my partner
2. The procedure to be performed on me is a surgical procedure, the details of which have been explained to me.
3. This surgical procedure involves risks, in addition to benefits, both of which have been explained to me.
4. The effects of the procedure should be considered permanent.
5. The procedure does not protect me or my partner from infection with sexually transmitted infections, including HIV/AIDS.
6. I can decide against the procedure at any time before the operation is performed (without losing my right to medical, health or other services or benefits).

_____ _____

(Signature or mark of client) (Date)

_____ _____

(Signature of attending doctor or delegated assistant) (Date)

If the client cannot read, a witness of the client's choosing who is of the same sex and who speaks the same language as the client must sign the following declaration:

I, the undersigned, attest that the client has affixed his thumbprint or mark in my presence.

_____ _____

(Signature or mark of witness) (Date)

KASULATAN NG PAHINTULOT PARA SA PAGTATALI

(Tubal Ligation o Vasectomy)

Ako, si _____, ang nakalagda sa ibaba, ay humihiling na gawin
(pangalan ng pasyente)

sa akin ang pagtali sa pamamagitan ng paraang _____ .
(isulat ang pamamaraan)

Ito ay ayon sa aking sariling kagustuhan, hindi ako pinilit o hinikayat. Nauunawaan ko ang sumusunod:

1. May mga pansamantalang pamamaraan ng kontrasepsiyon para sa akin at sa aking kabiyak/kinakasama.
2. Ang pamamaraang gagawin sa akin ay isang simpleng pagtitistis o simpleng operasyon na ang detalye ay ipinaliwanag sa akin.
3. Bukod sa mga ipinaliwanag na mga benepisyo ng pagtatali, nauunawaan ko na may bihirang pagkakataon na nalalagay sa alanganin ang sumasailalim sa simpleng operasyong ito..
4. Kung magiging matagumpay ang operasyon, ang bisa nito ay permanente na at hindi na ako magkakaanak pang muli.
5. Ang operasyong ito ay hindi makapagbibigay sa akin at sa aking partner ng proteksyon laban sa mga nakahahawang sakit na nakukuha sa pagtatalik, kabilang na ang HIV/AIDS.
6. Maari pa akong umurong sa pamamarang ito anumang oras bago simulan ang operasyon (alam kong walang mawawalang benepisyong o anumang karapatang pangkalusugan o serbisyo kung sakaling magbago ang aking desisyon).

Lagda ng pasyente/kliyente	Petsa
Lagda ng doctor o itinalagang assistant	Petsa

Kung hindi marunong bumasa ang kliyente, siya ay maaaring pumili ng kanyang saksi na kapareho ng kanyang kasarian at salita o wika upang siyang lumagda nang pagpapatunay na naunawaan ng kliyente ang anim na mga bagay o punto sa itaas.

Pangalan at lagda ng saksi	Tatak ng kanang hinlalaki ng kliyente

Session 4

PREVENTION OF INFECTION

OVERVIEW

Thousands of BTL/MLLA take place throughout the world each year without serious complications of an infectious nature.[1] Occasionally, however, life-threatening infections are associated with these procedures. They include tetanus, gangrene, and abdominal sepsis. Minor surgical wound infections are more common, but less-serious, infectious complications of minilaparotomy. The incidence of incurable blood-borne viruses, such as the human immune-deficiency virus (HIV) and hepatitis B virus (HBV), continues to rise. Because these viruses can be spread unknowingly (symptoms may take years to appear) and because it may not be possible to distinguish infected from uninfected individuals, appropriate infection prevention procedures must be practiced at all times and with all clients. It is important to realize that not only are the clients at risk of these infections, but so are the staff.

This session provides service providers with the knowledge on the internationally accepted and recommended infection prevention practices to decrease the likelihood of transmission of these infections in health care settings to either clients or staff.

LEARNING OBJECTIVES

At the end of the session, the participants will be able to:

1. Explain the concept of "standard precautions" in preventing spread of infection.
2. Discuss handwashing.
3. Enumerate the steps of proper handwashing.
4. Discuss the use of gloves.
5. Explain aseptic technique and its processes:
    - Surgical scrub
    - Using surgical gloves
    - Client preparation
    - Establishing and maintaining a sterile field
6. Discuss antisepsis and disinfection.
7. Differentiate antiseptics and disinfectants.
8. Discuss the steps in processing instruments and other items.
9. Discuss proper waste disposal.

REFERENCES

Tietjen L., Cronin W., McIntosh N. Infection Prevention for Family Planning Service Programs: A problem-solving reference manual. 1992.

NARRATIVE

STANDARD PRECAUTIONS

As health professionals, we cannot provide health care services without conducting procedures that put clients and staff at some risk of exposure to potentially infectious materials, but we can prevent transmission in many cases. The only way to prevent infections is to stop the transmission of microorganisms.

Standard precautions are based on the assumption that every person in the facility is considered as potentially infectious. Because many people with blood-borne viral infections (e.g., hepatitis B [HBV] or C [HCV], HIV) do not feel or look ill, standard precautions are to be applied consistently, regardless of the (known or unknown) health status of those who are providing or receiving care.

When applied consistently, standard precautions act as protective barriers between microorganisms and individuals, and are considered a highly effective means of preventing the spread of infection.

The following actions help to form such barriers, as well as provide the means for implementing the standard precautions:

- **Wash hands –** the most important procedure for preventing cross-contamination (person to person or contaminated object to person).
- **Wear gloves** (on both hands) before touching wet broken skin, mucous membranes, blood or other body fluids (secretions and excretions), soiled instruments, and contaminated waste materials or for performing invasive procedures.
- **Use physical barriers** (protective goggles, face masks, and aprons) if splashes and spills of blood or other body fluids are possible (e.g., when cleaning instruments and other items).
- **Use antiseptic agents** for cleansing skin or mucous membranes before surgery, cleaning wounds, or doing hand rubs or surgical hand scrubs with an alcohol-based antiseptic product.
- **Process instruments, gloves, and other items** after use by first decontaminating and thoroughly cleaning them, and then either sterilizing or high-level disinfecting (HLD) them, using recommended procedures. Again, in the context of IUD services, HLD is the recommended method of final processing.
- **Safely dispose of infectious waste materials** to protect those who handle them and prevent injury or spread of infection to the community.

HANDWASHING

Handwashing is one of the most important steps in prevention of the spread of infections.[4] Routine handwashing is important before and after examining or having any direct contact with a client. Hands should be washed after touching any object that might be contaminated with blood or other body fluids. Hands should also be washed after removing gloves, since small holes or tears may be present.

Plain or antimicrobial soap should be used for routine hand washing and hands should be rinsed in a stream of running water, then dried with a clean towel or air-dried. Shared towels become easily contaminated and should not be used. Microorganisms can multiply in standing water even when a

disinfectant is added; therefore, practices such as a common basin where multiple people wash their hands should be avoided.

THE SURGICAL SCRUB

Sterilized or high-level disinfected and holeless gloves are mandatory for the doctor and surgical assistants. Prior to putting on gloves, surgical staff must thoroughly scrub their hands with soap and water or antiseptic agents, for example, hexa-chlorophene, chlorhexidine, gluconate, or an iodophor. A small stick or a brush should be used for cleaning under the fingernails and a soft brush, cloth, or sponge should be used on all surfaces of the hands and forearms. For facilities where surgical scrubbing is accomplished with soap and water only, this should be followed by an ethyl alcohol and glycerin rinse (2-ml glycerin in 100-ml alcohol), rubbing the hands together until dry.

Ideally, the surgeon and his or her assistant should scrub thoroughly between procedures. In high-volume settings, this may not be feasible because the skin cannot tolerate the irritation caused by frequent scrubbing. In such settings, surgical staff should do a three-minute scrub every hour or after every four or five cases (whichever comes first), to prevent recolonization of the skin by microorganisms. Using 3–5 ml of the alcohol-glycerin mixture and rubbing the hands together until dry is an effective way to reduce numbers of bacteria on the hands between every case. Gloves must be changed between cases and when they are torn. Staff should wash their hands after removing their gloves when they leave the operating room for any reason or if gloves are torn. They should scrub before re-entering the operating room or before putting on another pair of gloves after having removed a torn pair.

Staff should wear short-sleeved shirts or scrub suits, have short and clean fingernails, and remove all jewelry. To scrub, hands should be held above the level of the elbows, thoroughly wet up to the elbows with water, and antiseptic solution applied. Beginning at the fingertips and using a circular motion, the hand and then arm up to the elbow should be vigorously washed. The procedure should be repeated for the other hand. While holding the hands above the elbows, the hands and forearms should be rinsed fingertips first. The entire procedure should be repeated several times, so that the scrub lasts three to five minutes overall. The hands and forearms should be dried with a towel.

ANTISEPTIC SOLUTIONS

Antiseptics are designed to remove as many microorganisms as possible without damaging or irritating the skin or mucous membrane on which they are used. Antiseptics usually do not have the same killing power as chemicals used for disinfection of inanimate objects. With the exception of iodine and alcohol, which are also disinfectants, antiseptic solutions should never be used to disinfect inanimate objects such as instruments and reusable gloves.

Below is a list of antiseptic solutions appropriate for surgical scrubbing and skin preparation prior to minilaparotomy. The most versatile solutions, which can be used for both surgical scrubbing and skin preparation, include alcohol, chlorhexidine gluconate, and iodophors. Chlorhexidine and iodophors are safe for use on mucous membranes and can be used to cleanse the vagina and cervix prior to insertion of a uterine elevator. Alcohol, iodine preparations, and hexachlorophene should not be used on mucous membranes. Descriptions of several recommended antiseptic solutions follow.

Chlorhexidine Gluconate

Chlorhexidine gluconate is an excellent antimicrobial for surgical scrub and skin preparation. It remains active against microorganisms on skin for as long as six hours after use, and is safe even for

use on newborn infants. The recommended concentration, 4% chlorhexidine gluconate, is commonly available under the trade names Hibitane and Hibiscrub. (Note: Savlon, which contains chlorhexidine, is not listed because the concentration varies from country to country, from as little as 1–4%.)

Isopropyl Alcohol Solutions (60–90%)

Isopropyl alcohol (60–90%) are excellent antiseptics, commonly available, and inexpensive. It rapidly kills all fungi and bacteria, including mycobacteria, and kill most viruses, including HBV and HIV. Although alcohol has no persistent killing effect, the rapid reduction of microorganisms on skin protects against regrowth of organisms, even under gloves, for several hours. Alcohol can be used as a rinse after a surgical scrub with soap, as a rub between cases (in combination with glycerine), and for skin preparation; however, it should not be used on the cervix, vagina, or genitalia. A 60–70% solution of isopropyl alcohol is recommended because it is effective, less drying to the skin, and less expensive than higher strengths. Alcohol is not effective for cleaning and, as such, should not replace hand washing with soap and water.

Iodine Solutions

Iodines in a 3% concentration are highly effective antiseptics for skin preparation. Because they are irritating, they should not be used on the vagina, cervix, or genitalia. Iodines must be removed from the skin using alcohol to prevent irritation. Formulations of 1–3% iodine are available as both aqueous (Lugol) and alcohol (tincture of iodine in 70% alcohol) solutions.

Iodophors

Iodophors are solutions of iodine mixed with a carrier that releases small amounts of iodine. Unlike iodines, iodophors are generally nontoxic and nonirritating to skin and mucous membranes and can be used on the cervix, vagina, and genitalia. Iodophors kill vegetative bacteria, mycobacteria, viruses, and fungi. **They require up to two minutes of contact time to release free iodine.** Once released, however, the iodine has rapid killing action. It is not usually necessary to dilute commercially available iodophors manufactured for antisepsis. Povidone iodine is the most common iodophor. Iodophors are available under the trade names Betadine and Wesodyne.

SOLUTIONS TO AVOID

Benzalkonium chloride (Zephiran) is not an effective surgical antiseptic because solutions may become contaminated by Pseudomonas and other common bacteria, and are easily inactivated by cotton gauze and other organic material.

Mercury laurels and other mercury-containing compounds, which may be sold as antiseptic, are dangerous because of their toxicity. Skin exposure may result in absorption of mercury, blister formation, and contact dermatitis. Inhalation or ingestion of low levels of mercury may cause central nervous system disorders (numbness, speech impairment, and deafness) and higher levels (200 mg or more) may be fatal. Pregnant women exposed to small doses may not show toxic effects themselves, but their fetuses may be harmed.

PROCEDURES FOR PREOPERATIVE PREPARATION OF THE PATIENT

Proper preparation of the client for surgery helps prevent infection. The client should change from street clothes into a clean gown. If the client is unable to bathe or shower on the day of the procedure before coming to the clinic, the operative site should be thoroughly washed with soap and water before applying the antiseptic. The staff should evaluate the client for signs of local infection in the operative area. If the client has a local infection, the operation should be postponed, the infection treated, and a form of temporary contraception provided.

It is best not to shave the hair near the operative area. Shaving results in nicks in the skin where bacteria may proliferate, leading to an increased potential for postoperative infections. If hair obstructs the operating area, it should be trimmed just before the operation to reduce the time for potential proliferation of bacteria.

The performance of a careful pelvic examination is essential before tubal occlusion, and can detect the large majority of cases of active pelvic infection. High-level disinfected gloves and speculum should be used for the pelvic exam. It is not necessary that these items be sterile. For interval procedures, the vagina and cervix are cleansed with antiseptic solution before insertion of the uterine elevator. Employ the no touch technique in inserting the uterine elevator. Recommended antiseptics are iodophors (such as Betadine) and chlorhexidine. Iodophors require one to two minutes to work, because there must be time for the release of free iodine, which inactivates the microorganisms. Antiseptic solutions should be liberally applied, at least two times.

Using disinfected, dry forceps to hold antiseptic-soaked cotton, a staff member thoroughly cleans the abdominal site by gentle scrubbing. The solution is applied in a circular motion at the site of the incision from the inside working out, for several inches around the site. A circular motion inhibits immediate recontamination of the site with local skin bacteria. Excess antiseptic should not be permitted to drip and gather beneath the client's body, as this may cause irritation. After the surgical site is disinfected, the area should be covered with a sterile drape.

USE OF MULTIDOSE VIALS

Specific guidelines must be followed to prevent contamination of multidose vials. A needle must never be used to draw up a solution from a multidose vial once it has been used for a client's injection unless the entire contents of the vial are to be used only on the one patient or the needle has been processed. Likewise, after a syringe is used for an injection, it must not be used again to withdraw more solution from a vial. Changing the needle but using the same syringe that has been used to give an injection to another client is not a safe practice. Hepatitis B virus has been shown to be transmitted from one patient to another under such circumstances. Do not leave needles in the multidose vials as these cause contamination.

Syringes larger than 10 ml is not often available. If more than 10 ml of a solution from a multidose vial is needed, staff can use the same needle and syringe to withdraw the solution in 10 ml doses, depositing each dose into a sterile medicine cup on the surgical stand. During the administration of the solution, the required amounts can be withdrawn from the supply in the cup. Because the solution from the cup will be used on only one patient, it is not necessary to change the needle and syringe each time more solution is drawn up from the cup. Any solution remaining after the procedure should be discarded. This is a useful procedure to follow for local anesthesia for minilaparotomy where up to 20 ml of 1% lidocaine will be used. An additional advantage to this method is that the chance of overdose is virtually eliminated, because no more than the maximum dose is made available for use.

PROCESSING OF INSTRUMENTS AND OTHER REUSABLE ITEMS

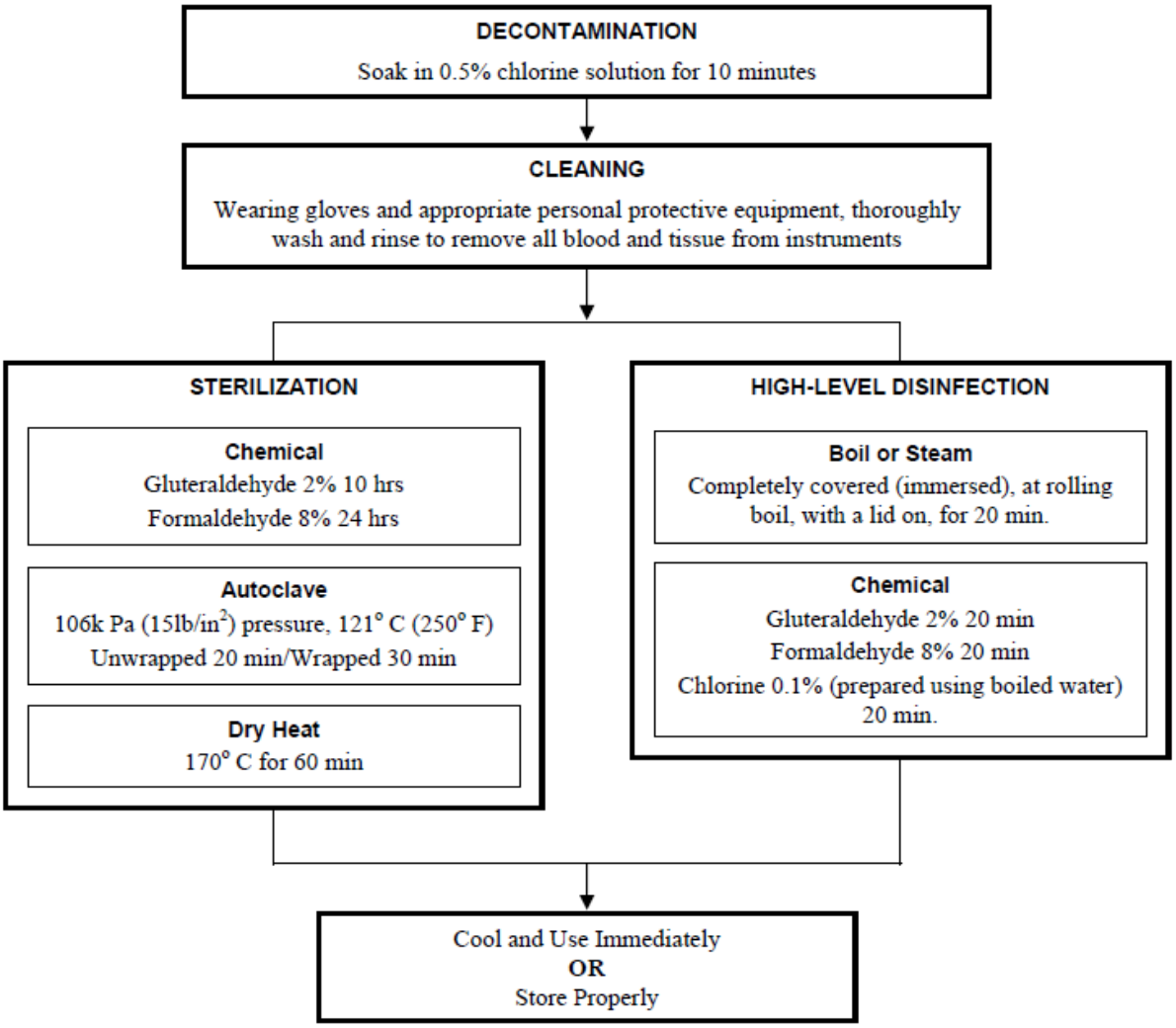

Wrapped sterile packs can be stored for up to one week. Unwrapped items should be stored in a sterile or high-level disinfected container with a tight fitting lid or used immediately.

Decontamination and cleaning of instruments and other items followed by sterilization or high-level disinfection can minimize the risk of transmitting infections to both the client and health care worker. Because high-level disinfection does not reliably destroy all bacterial endospores, instruments and other items for use during surgical procedures should be sterilized. When it is not possible to use sterilization, high-level disinfection is the only acceptable alternative for processing instruments and other items for reuse.

Decontamination

Surgical instruments, reusable gloves, and other items that have been in contact with blood or other body fluids should be decontaminated prior to cleaning. **Immediately after use**, items should be placed in a plastic bucket containing a solution of 0.5% chlorine for 10 minutes. Chlorine rapidly inactivates both HBV and HIV, making the instruments safer for staff to handle during cleaning. After

10 minutes, items should be removed from the chlorine solution and rinsed with water or cleaned immediately. Soaking instruments for excessive periods of time in the chlorine solution is damaging to the instruments. It is best to wear utility gloves during this and subsequent steps. A new chlorine solution should be prepared at the beginning of each day. Ideally, there should be separate containers for sharps (scalpel blades, suture and hypodermic needles), instruments, and gloves. Gloved hands should be immersed in chlorine solution prior to removal and should be inverted as removed and deposited in chlorine solution.

FORMULA TO CALCULATE AND MIX APPROPRIATE CHLORINE SOLUTION

From concentrated solution:

$$\text{Total parts Water (for one part concentrated chlorine)} = \frac{\text{\% Chlorine in concentrated solution}}{\text{0.5\% (desired concentration)}}$$

Example: To make a 0.5% chlorine solution from a 5% concentrated Chlorine solution: (following the formula)

$$\text{Parts water} = \frac{5\%\ Cl}{0.5\%} 1 = 10 - 1 = 9$$

Use 1 part concentrated chlorine solution and 9 parts water

From dry powder:

$$\frac{\text{Weight (grams) dry powder}}{\text{Liter of water}} = \frac{\text{\% desired concentration}}{\text{\% concentrate powder}} \times 1000$$

Example: To make a 0.5% chlorine solution from a 35% concentrated chlorine powder

$$\frac{\text{Grams}}{\text{Liter}} = \frac{0.5\%}{35\%} \times 1000$$

$$= 14.2 \text{grams/liter}$$

Cleaning

Cleaning is a crucial step in instrument processing and greatly reduces the number of microorganisms and endospores on instruments and other equipment. Before equipment is high-level disinfected or sterilized, a thorough mechanical cleaning is necessary to remove blood and organic material. This material can interfere with the high-level disinfection and sterilization process because microorganisms in and under it may not be killed. Both sterilization and HLD procedures are not effective without prior cleaning. Instruments should be vigorously scrubbed using a brush in soap and warm water to completely remove all blood, tissue, and other residue particularly in the hinges, joints and grasping surfaces. Instruments are rinsed thoroughly with water as soap may interfere with further processing. Items are allowed to air-dry. Items to be high-level disinfected by boiling can be directly placed in a pot of water.

High-Level Disinfection

High-level disinfection is effective in eliminating all microorganisms except some bacterial endospores. It is appropriate for instruments that will be in contact with unbroken skin or mucous membranes, such as uterine elevators, specula, and gloves for pelvic examinations. High-level disinfection is the only acceptable alternative for processing instruments and other items for reuse if sterilization is not possible. To be effective, high-level disinfection must be preceded by decontamination, careful cleaning, and thorough rinsing. High-level disinfection can be achieved by immersing items in boiling water for 20 minutes or by soaking items in a chemical disinfectant such as a 2% glutaraldehyde (Cidex), 8% formaldehyde solution or in a 0.5% chlorine solution for 20 minutes, then rinsing with boiled water. *Nothing should be added to or removed from the water or chemical solution once timing has begun.* Following either procedure, if items are not used immediately, they should be air-dried and stored in a covered, high-level disinfected container for up to one week. Alcohol, iodine, and iodophors are not considered high-level disinfectants. Storage and rinsing containers must also be sterilized or high level disinfected. For rinsing solutions, this should be done daily, for dry storage, weekly. Labels giving date of processing should be placed in the containers.

Sterilization

Sterilization eliminates all microorganisms (bacteria, viruses, fungi, and parasites) including bacterial endospores from instruments and other items. Sterilization is recommended for items that come in contact with the blood stream or tissues beneath the skin such as reusable needles, syringes, and surgical instruments. Sterilization can be achieved by using steam (autoclaving) or dry heat (oven) or by soaking in a chemical solution. To be effective, sterilization must be preceded by decontamination, careful cleaning, and thorough rinsing.

It is best to wrap equipment before steam sterilization with paper or double-layered cotton fabric. Items or packs should be arranged in the autoclave to allow free circulation of steam. Wrapped items should be sterilized for 30 minutes; unwrapped items for 20 minutes, at 121°C (250°F) and 106 kPa pressure (15 lb./in.^{2}). Packs or items should be allowed to dry before removing them from the autoclave and to cool before storage or use. Wrapped items can be stored for up to seven days. Unwrapped items should be used immediately or stored in a covered sterile container for up to seven days. The sterilization process should be monitored to be sure that the equipment is truly sterilized. This is best accomplished by use of a reliable biological indicator containing live bacterial spores, at regular intervals. The autoclave itself should be checked with each use to make sure it is functioning properly, and repairs should be made when necessary (for example, broken gauges and seals should be replaced).

It is best to wrap equipment in foil or double-layered cotton fabric prior to sterilization by dry heat. Items or packs should be sterilized at 170°C (340°F) for 60 minutes or 160°C (320°F) for 120 minutes. Timing should not begin until the oven has reached the desired temperature. Because dry heat can dull sharp instruments and needles, these items should not be sterilized at temperatures higher than 160°C. Items should be allowed to cool before removing them from the oven. Wrapped items can be stored for up to seven days. Unwrapped items should be used immediately or stored in a covered sterile container for up to seven days.

To achieve chemical sterilization, items should be soaked for at least 8–10 hours in a 2% glutaraldehyde solution (for example Cidex) or 24 hours in 8% formaldehyde solution. Items should not be added or removed once timing has begun. Items should be rinsed well with sterile water, air-dried, and stored in a covered sterile container for up to seven days.

Storage of Processed Items

Proper storage of high-level disinfected and sterilized items is equally as important as the high-level disinfection or sterilization process itself. Items should be stored **dry**. Microorganisms will multiply

in standing water even if a disinfectant has been added. For this reason, *the practice of storing pick-up forceps in a bottle filled with disinfectant solution should be avoided.* It is more appropriate to high-level disinfect the forceps each day and store them dry, in a high-level disinfected wide-mouth cylindrical container. If possible, items should be stored in an enclosed cabinet. An item must be considered contaminated when the package is torn or damaged, when the wrapping is wet, or when the expiration date is exceeded.

FACILITY REQUIREMENTS

Operating staff who are ill, or have infections, or draining lesions or cuts on exposed areas should be excluded or assigned other duties out of the operating room until they are well.

Operating Room

The operating room should have a tile or concrete floor that can be easily and thoroughly cleaned. It should be enclosed, free of dust and flies, have adequate lighting, and be well isolated from the part of the clinic or hospital that is open to the public. The operating room should be locked when not in use and should not serve as a storeroom. Ideally, the operating room should be air-conditioned. Windows should be 1.8 m (6 ft.) above the floor or high enough to prevent cross-ventilation in the operative field, and should be screened against flies and mosquitoes. If there is a problem with insects, the room should be fumigated with an insecticide at least once a week, on non-working days.

Preparation of the Operating Room

The operating room should be cleaned and set up before the client enters.

- Decontamination solution (0.5% chlorine), freshly made on the day of the surgery, should be placed in plastic containers in the operating room.
- Appropriately processed and sterilized instrument kits should be opened and arranged on the instrument table by the surgical assistant, who should be scrubbed, gowned and gloved.
- Supplies and drugs needed for the surgery should be readily and handily available.
- Equipment and drugs for emergency management should be readily and handily available.

Traffic Flow

The purpose of controlling the number and activity of people in and around the operating room is to minimize the level of microbial contamination. Limiting the traffic flow in the operating room and other procedure rooms is an efficient way to maintain a state of cleanliness within the O.R. The surgical suite should be arranged in such a way as to facilitate orderly flow of clients and staff.

The number of people and movement should be kept to a minimum, since the number of microorganisms in an area tends to be related to the number of people present and their activity. Only persons who are assisting with the procedures should be permitted in the room. Staff should never use the operating room as a thoroughfare. Keeping the door of the operating room closed at all times and keeping it locked when the room is not in use helps minimize traffic flow.

Cleaning the Operating Room

On the morning of each day that the operating theater is to be in use, the floor should be cleaned with a damp (water only) mop and counters and tabletops wiped with a damp rag (water only). After each case, the operating table, instrument stands, and other potentially contaminated areas, such as light handles and counter tops, should be wiped down with a 0.5% chlorine solution. This

procedure should be carried out at the end of the day with a cleaning solution that contains both a disinfectant (chlorine) and a detergent (soap).

The operating theater should be thoroughly cleaned at least once a week. This should include scrubbing the room, including walls, windows, lights, floors, and equipment, with a recommended disinfecting solution. Washing should be done from top to bottom, so that debris, which falls on the floor, will be cleaned up last.

ESTABLISHING AND MAINTAINING A STERILE FIELD

A sterile field around the incision is established by applying antiseptic solutions to the abdominal area and placing drapes around the surgical field. The sterile field includes all sterile drapes, the front of the sterile gowns worn by the surgical team (from waist to neck, and from fingertips to elbow, and the instrument tray. Maintenance of the sterile field is the responsibility of the entire surgical team (scrubbed and unscrubbed) and consists of ensuring that only sterile items come into contact with the sterile field and that any contamination is immediately rectified.

Although any member of the team can perform skin preparation, draping can be performed only by those who are scrubbed, gowned, and gloved. The assistant and surgeon do draping together. The use of a single, fenestrated drape facilitates establishment of a sterile field.

To maintain a sterile field:

- Allow only sterile items and personnel within the sterile field.
- Work only within the limits of the sterile field.
- Do not contaminate items when opening, dispensing, or transferring them.
- Consider any sterile item that has been penetrated (cut, wet, or torn) to be nonsterile.
- Never set up a sterile field near a door or an open window.
- When in doubt as to whether an item is still sterile, consider it to be contaminated.

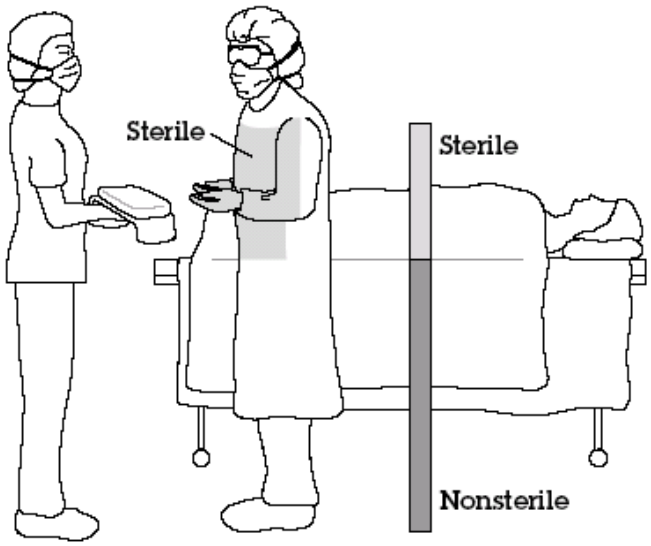

GOOD SURGICAL TECHNIQUE

Meticulous attention to bleeding and gentle handling of tissue during surgery can help reduce the risk of infection. Post-procedure infections are most likely to occur when tissues have been damaged through rough handling or excessive manipulation during surgery or when there is excessive bleeding.

WASTE DISPOSAL

Contaminated wastes are a potential source of infection for staff as well as for the local community if the wastes are not disposed of properly. A health care facility generates different kinds of wastes.

Kinds of Waste

The World Health Organization classified the waste generated from a health care facility into two: the **general waste**, and the **hazardous medical wastes**.

1. General waste

These are non-hazardous wastes that pose no risk of injury or infections. These are similar in nature to household trash. Examples are: paper, boxes, packaging materials, bottles, plastic containers, and food-related trash.

2. Hazardous medical waste

These are the 10 – 25% fraction of healthcare wastes that are classified into the following waste groups.

- Infectious – all wastes that are susceptible to contain pathogens (or their toxins) in sufficient concentration to cause diseases to a potential host. e.g. excreta, tissue swabs, blood bags, dressings, etc.
- Pathological – consist of human tissues or fluids e.g. body parts, blood, blood products and other body fluids, placentas, and product of conception, materials containing fresh or dried blood or body fluids such as bandages, and surgical sponges.
- Pharmaceutical - are expired, unused, and contaminated pharmaceutical products, drugs, vaccines that are no longer needed. It also includes discarded items used in handling pharmaceuticals such as bottles, or boxes with residue, gloves, masks, connecting tubings, and drug vials.
- Chemicals - are the discarded solid, liquid, and gaseous chemicals used in cleaning, housekeeping, and disinfecting procedures.
- Sharps - items that could cause cuts, puncture wounds, including hypodermic and suture needles, scalpel blades, blood tubes, infusion sets, and other glass items that have been in contact with potentially infectious materials (such as glass slides and coverslips)
- Pressurized containers – consist of full or emptied containers or aerosol cans with pressurized liquid gas or powdered materials
- Highly infectious – consists of microbial cultures and stocks of highly infectious agents. It includes body fluids of patients with highly infectious diseases.
- Genotoxic - waste containing genotoxic properties e.g. drugs used in cancer therapy
- Radioactive - consist of liquids, gas, ans solids contaminated with radionuclides whose radiations have genotoxic effects e.g. radiation from x-rays

- Waste with high content of heavy metals – e.g. cadmium or mercury from thermometers or manometers.

Since the disposal of medical waste is frequently a problem, it is useful to develop a medical waste management plan and a staff be assigned the responsibility of waste disposal.

The Four Steps of Hazardous (Medical) Waste Management

The management of waste must be consistent from the point of generation to the point of final disposal. The path between these two points can be segmented into four steps.

1. Sorting or segregation and containerization

Only a small percentage of the waste generated by a healthcare facility is medical waste that must be specially handled to reduce the risk of infections or injury. Therefore, sorting the waste at the point at which it is generated can greatly reduce the amount that needs special handling.

The correct segregation/sorting of waste at the point of generation relies on a clear identification of the different categories of waste and the separate disposal of the waste in accordance with the categorization chosen. To encourage segregation at source, reusable containers with plastic liners of correct size and thickness are placed as close to the point of generation as possible. They should be properly color coded.

- Black trash bag: General-Non-Infectious-Dry
- Green trash bag: General-Non-infectious-Wet
- Yellow trash bag: Infectious-Pathological
- Sharp container: Sharps

Needles and other sharps pose the greatest risk of injury, and should be disposed of in special sharps containers such as heavy cardboard boxes, tin cans with lid and plastic bottles.

2. Handling

Handle medical waste as little as possible before disposal. When waste containers are ¾ full, the liners are closed with plastic strings and are placed in larger containers at the interim storage areas. Always wear heavy utility gloves when handling medical waste. Always wash your hands after handling wastes and after removing your gloves.

3. Interim storage

In order to avoid both the accumulation and decomposition of waste, it must be collected on a regular daily basis. Waste should never be stored in the facility for more than one or two days.

If it is necessary to store medical waste on-site before final disposal, waste should be placed in an area that is minimally accessible to clinic staff, clients and visitors.

4. Final disposal

General wastes, similar to household waste, can be collected by the regular municipal garbage collector and transported into the final dump sites.

Solid Medical Waste

There are three options for the disposal of solid medical waste: burning waste, burying waste, and transporting waste to an off-site disposal site.

Building and using a waste-burial pit

1. Choose an appropriate site that is at least 50 meters away from any water source to prevent contamination of water source. The site should have proper drainage, be located downhill from the wells, be free of standing water, and be in an area that does not flood. The site should not be located on land that will be used for agriculture or development.
2. Dig a pit 1 to 2 meters wide and 2 to 5 meters deep. The bottom of the pit should be 1.8 meters above water table.
3. Fence in the area to keep out animals, scavengers, and children.
4. Keep waste covered. Every time waste is added to the pit, cover it with a 10 to 30cm layer of soil.
5. Seal the pit when the level of waste reaches 30 to 50 cm of the surface of the ground. Fill the pit with dirt, seal it with concrete and dig another pit.

In our country burning waste is not applicable because of the Clean Air Act. So the remaining options are:

- burying, that is if there is a space at the back of one's facility to dig a pit;
- and transporting waste to an off-site disposal site. This is done by the waste collector of hospital medical wastes.

Liquid medical waste

The following are the procedures when disposing liquid medical wastes:

1. Carefully pour liquid waste down a sink, drain or flushable toilet.
2. Before pouring liquid waste down a sink, drain, or toilet, consider where the drain empties. It is hazardous for liquid waste to run through open gutters that empty onto the grounds of the facility.
3. Rinse the sink, drain, or toilet thoroughly with water to remove residue waste – again avoid splashing. Clean these areas with s disinfectant cleaning solution at the end of the day or more frequently if heavily soiled.
4. Decontaminate the container that held the liquid waste by filling it with 0.5% chlorine solution for 10 minutes before washing.
5. Wash your gloved hands after handling liquid waste before removing gloves.

DISPOSAL OF NEEDLES AND OTHER SHARP OBJECTS

To avoid accidental needle sticks, staff should not bend, break, or clip needles prior to disposal. **Needles should not be recapped routinely**, since many needle-stick injuries are self-inflicted during cap replacement. The assembled needle and syringe should be discarded in a puncture-proof container. If recapping is necessary, staff should use the one-handed method:

- First, place the cap on a hard, flat surface, and then remove hand.
- Second, with one hand, hold the syringe and use the needle to "scoop up" the cap.

- Finally, when the cap covers the needle completely, use the other hand to carefully secure the cap on the needle. Alternately, the cap can be held with a clamp while placing it back over the needle.

Sharps should be disposed of in a puncture-resistant lidded container, made of either metal or heavy, rigid plastic. Sturdy and empty plastic bottles from antiseptic or other solutions can be used for this purpose as well as empty glass intravenous fluid bottle; however, with the latter there is a risk of breakage. The container should be close to the area where it will be used so that staffs do not have to carry sharp items a long distance before disposal. This increases the risk of injury.

The container with sharp objects should be tightly capped, plugged, or taped closed when it is three-quarters full. It should be disposed of by burying. Needles and other sharp objects may not be destroyed by burning, and may later cause injuries that can lead to serious infection. However, incineration or burning in a container does make those items less scavengeable and will destroy HIV and HBV.

The table below provides a list of available antiseptics with their efficacy and potential uses.

GROUP	ACTIVITY AGAINST BACTERIA							POTENTIAL USES			
	Gram positive	Most gram negative	TB	Viruses	Fungi	Endospores	Relative speed of action Intermediate	Affected by organic matter	Surgical scrub	Skin preparation	Comments
Alcohols (60%-90% ethyl or isopropyl)	**Very good**	**Very good**	**Good**	**Good**	**Good**	**None**	**Fast**	**Data vary**	**Yes**	**Yes**	**Not for use on mucuous membrane**
Chlorhexidine * 4% (Hibitane, Hibiscrub)	**Very good**	**Good**	**Poor**	**Fair**	**Fair**	**None**	**Slow**	**Slight**	**Yes**	**Yes**	**Has good persistent effect**
Hexachlorophene-3% (pHisohex)	**Good**	**Poor**	**None**	**Fair**	**Poor**	**None**	**Slow**	**Slight**	**Yes**	**No**	**Rebound growth of bacteria may occur**
Agueous iodine preparations (3%) or iodine and alcohol	**Very good**	**Very good**	**Good**	**Good**	**Good**	**Poor**	**Intermediate**	**Slight**	**No**	**Yes**	**Not for use on mucous membrane**
Iodophors 1: 2500 solution (Betadine)	**Very good**	**Good**	**Good**	**Good**	**Good**	**None**	**Slow**	**Yes**	**Yes**	**Yes**	**Can be used on mucous membrane**

Savlon which contains chlorhexidine, is not listed because the concentration of chlorhexidine varies from country to country, from as little as 1% to 4%.

Source: L. Tietjen, W. Cronin and N. McIntosh. 1992. Infection Prevention for Family Planning Service Programs: A problem-solving reference manual.

Session 5

THE SURGICAL TEAM

OVERVIEW

Minilaparotomy performed under local anesthesia requires a team effort—a group of providers working in coordination to perform a refined surgical technique while ensuring safety, efficacy, and client comfort. As a group, they should make sure to implement the tasks needed to conduct surgery efficiently.

This session provides service providers with the knowledge on the responsibilities of each member of the surgical team to perform BTL/MLLA efficiently with consideration of the clients' comfort and safety.

LEARNING OBJECTIVES

At the end of the session, the participants will be able to:

1. Explain what the "surgical team" is.
2. Discuss the components of a surgical team and the responsibilities of each member of the team.
3. Explain the tasks of the members of the surgical team before, during, and after minilap under local anesthesia.

REFERENCES

Cohn I., Bornside G.H. Infections. In *Principles of Surgery*, 5th ed. Schwartz S.I., Shires G.T., Spencer F.C., eds. New York: McGraw-Hill Book Co., 1989.

World Federation of Health Agencies for the Advancement of Voluntary Surgical Contraception. *Safe and Voluntary Surgical Contraception.* New York: AVSC International, 1995.

NARRATIVE

To perform an effective surgical procedure that ensures client safety, and client comfort, the surgical team should consist of at least four people: a surgeon, a surgical assistant, circulating nurse and a client monitor.

Each member of the surgical team has very distinct responsibilities:

- The ***surgeon*** ensures that the client is fit for the procedure, performs the surgery and is responsible for the surgical team's overall performance.
- The ***surgical assistant*** assists the surgeon by optimizing exposure of the uterus and fallopian tubes, cutting sutures, and anticipating the surgeon's needs.
- The ***circulating nurse*** is responsible for:
  - Preparing the operating room before the client enters together with the surgical assistant
  - Ensuring that needed supplies and instruments are available in the operating room
  - Providing sedative and/or analgesic drugs prior to surgery and checking effectiveness of these
  - Monitoring the client's vital signs
  - Communicating with the client
  - Observing early signs of complications
  - Immediately alerting the surgeon for signs of complications
  - Handling any additional supplies that the surgeon may request during the surgery
- The ***client monitor*** is responsible for providing post-operative care to clients. This includes:
  - Monitoring vital signs every 15 minutes until these are stable post-operatively
  - Observing signs of post-operative complications (e.g., lowering of blood pressure with increasing pulse rate, excessive bleeding from operative site, pallor, difficulty of breathing, severe abdominal pain, inability to urinate)
  - Referring to the surgeon any untoward events during recovery
  - Encouraging clients to ambulate once fully awake
  - Ensuring that clients can tolerate oral intake post-operatively

As team leader, the surgeon is ultimately responsible for supervising the steps needed for BTL, such as:

- Informed decision making
- Completion of the informed consent form
- Preoperative assessment

- Correct implementation of infection prevention procedures
- Appropriate and continuous client monitoring
- Choice and appropriate management of the anesthesia regimen
- Adequate recovery monitoring
- Provision of postoperative instructions
- Confirmation that the clinic is equipped and ready to manage any emergency

The surgeon should also have a leadership role in analyzing practices of the team that need to be changed to improve the quality of care. This can be done through regular review with the team of all records of complications, surgical difficulties, and problems identified at follow-up visits.

The table below summarizes the tasks of the members of the surgical team.

Tasks of the Members of the Surgical Team: Surgeon, Surgical Assistant, Circulating Staff, Client Monitor

PHASE	SURGEON	SURGICAL ASSISTANT	CIRCULATING STAFF	CLIENT MONITOR
Pre-Operative	• Puts on surgical garments including cap and mask. • Greets the client. • Reviews client's chart to ensure that she is fit for BTL/MLLA. • Double checks that the client is not pregnant. • Verifies informed consent. • Describes, in simple language, critical steps of the procedure and what she will feel. • Obtains client's cooperation during the procedure. • Performs pelvic examination. • Inserts the uterine elevator. • Instructs the circulating staff to insert the IV (if not yet done) and administer by slow IV available sedative (e.g., Diazepam 10 mg.) and analgesic (Meperidine 50 mg.) • Performs surgical scrub and puts on sterile surgical	• Puts on surgical garments including cap and mask. • Prepares instruments for the procedure. • Ensures that necessary instruments and other emergency equipment are available and functional. • Performs surgical scrub and puts on sterile surgical gown and gloves. • Arranges sterile instruments on instrument table. • After verifying drug strength, withdraws local anesthetic from the vial. • Assists the surgeon to gown and glove and to drape the client.	• Puts on surgical garments including cap and mask. • Determines the number of clients scheduled for minilap. • Prepares decontaminating solution (0.5% chlorine). • Greets and escorts the client to operating room. • Reviews the chart and assures signed informed consent is obtained. • Identifies the type of client (i.e., post-partum, post-abortal or interval) • Assists client unto the operating table. • Communicates with the client. • Administers analgesia and sedative by slow IV and in accordance with the surgeon's instructions. • Takes vital signs before and after analgesia and sedative administration. • Observes and reports any observed untoward reactions to the	• Determines the number of clients scheduled for minilap. • Ensures that the client has been counseled. • Reviews the chart and assures signed informed consent is obtained. • Asks the client to void and wash her perineum. • Assists the client in changing her garments to surgical gown. • Inserts IVF.

PHASE	SURGEON	SURGICAL ASSISTANT	CIRCULATING STAFF	CLIENT MONITOR
	gown and gloves. • Drapes the client.		surgeon. Post-Partum Case • Drapes lower portion of abdomen including the extremities. • Positions her clothing to expose the abdomen. Interval Case • Prepares the tray for cleaning the perineum and vagina, pelvic examination, and insertion of uterine elevator. • Assists the surgeon during pelvic examination and insertion of uterine elevator. • Tapes the uterine elevator to the inner thigh, if the dorsal lithotomy position is preferred. • Prepares the abdomen with the appropriate antiseptic solution • Serves vial of lidocaine to surgical assistant after disinfecting the rubber stopper.	
Intra-Operative	• Determines site of incision. • Infiltrates the layers of the site of incision with local anesthesia.	• Notes start time of surgery for circulating staff to record • Assists in accordance with the surgeon's	• Anticipates and responds to the needs of the surgeon and surgical assistant. • Maintains continuous	

PHASE	SURGEON	SURGICAL ASSISTANT	CIRCULATING STAFF	CLIENT MONITOR
	• Checks that the site is anesthesized by asking the client if she feels pain while pinching the operative site. • Incises and dissects the layers of the operative site. • Instructs the surgical assistant on retraction and sponging. • Picks up the peritoneum and instructs the assistant on the application of the forceps, appropriately. • Elevates the uterus by depressing the uterine elevator. • Exposes the uterus. • Instructs the assistant to hold the retractors while each tube is picked up and identified. • Ligates and cuts a segment of the tubes. • Checks for bleeders and ligates, as needed. • Closes the incision, appropriately. • Dresses the	instructions on sponging, retraction and exposure of the operative field. • Works with the surgeon in maintaining a sterile technique. • Ensures that all used instruments and gauzes are accounted for.	communication with the client. • Monitors and records vital signs. • Informs the surgeon of any untoward reactions or observations.	

PHASE	SURGEON	SURGICAL ASSISTANT	CIRCULATING STAFF	CLIENT MONITOR
	wound.			
Post-Operative	• Removes the uterine elevator and places this in the pail with decontaminating solution. • Checks for abnormal vaginal bleeding. • Practices proper removal and decontamination of gloves. • Communicates to the client.	• Disposes of sharps in puncture-proof container. • Soaks used instruments in decontaminating solution. • Practices proper removal and decontamination of gloves.	• Records the time the surgery is completed. • Ensures completeness of the client's chart. • Communicates to the client. • Takes the client's vital signs prior to transfer to the recovery room. • Assists the client's transfer to the stretcher. • Transfers the client to the recovery room. • Endorses the client to the client monitor in the recovery room.	• Monitors and records the client's vital signs every 15 minutes until stabilized to pre-operative levels. • Observes and reports, as needed, any untoward reactions. • Removes the IVF. • Checks the client's wound dressing to ensure that there is no bleeding. • Communicates to the client when she is fully awake. • Assists the client as she sips soup. • Assists the client in changing to her clothes. • Provides oral and written post-op instructions to the client and her companion. • Informs the surgeon prior to discharge. • Records data pertaining to recovery period.

Session 6

PREPARATION FOR SURGERY

OVERVIEW

Instituting measures to adequately prepare clients for BTL/MLLA will foster client satisfaction, eliminate future regrets and prevent complications. Preparation for surgery includes preoperative assessment and screening, provision of preoperative instructions, and review with the client of what to expect during the procedure.

This session provides the necessary information on the process for preparing the client for BTL/MLLA.

LEARNING OBJECTIVES

At the end of the session, the participants will be able to:

1. Discuss the components of client preparation for surgery.
   - Pre-operative assessment screening
   - Pre-operative and post-operative instructions
   - Review of what to expect during the procedure
2. Identify client conditions suitable for female sterilization using the WHO-MEC.
3. Explain how to manage clients who are not eligible for BTL by BTL/MLLA.

REFERENCES

Cohn I., Bornside G.H. Infections. In *Principles of Surgery*, 5th ed. Schwartz, S.I., Shires, G.T., Spencer, F.C., eds. New York: McGraw-Hill Book Co., 1989.

Diaz-Sanchez, V., Bonilla, C., Reyes, A., Valero, A., Domenzain, M., and Perez, Palacios G. Local anesthesia and minilaparotomy: a safe procedure for tubal occlusion in women with severe health problems. *Contraception* 1987; 36:211–15.

Grubb, G.S., Peterson, H.B. Luteal phase pregnancy and tubal sterilization. *Obstet Gynecol* 1985; 66:784–8.

World Federation of Health Agencies for the Advancement of Voluntary Surgical Contraception. *Safe and Voluntary Surgical Contraception*. New York: AVSC International, 1995.

NARRATIVE

The preparation for surgery includes preoperative assessment and screening, preoperative instructions, and review of what to expect during the procedure. Preoperative assessment is essential in the provision of MLLA services to determine the client's fitness for surgery, identify conditions that will affect the procedure and anesthesia regimen and to ensure that the client's decision is voluntary and informed. The preoperative assessment can also provide an opportunity for overall health screening. This is particularly important in countries where many people rarely visit a health facility or where health services are inadequate. Clients should also be screened for sexually transmitted diseases (STDs) and treated or referred for treatment.

PRE-OPERATIVE ASSESSMENT

The pre-operative assessment should be conducted before surgery is scheduled to screen for conditions that warrant caution, delay, or special/refer consideration. The WHO Medical Eligibility Criteria (WHO MEC) provides recommendations based on the latest clinical evidence available on the safety of the methods for people with certain health conditions.

WHO IS RESPONSIBLE FOR PREOPERATIVE ASSESSMENT?

Any health care provider trained in taking a complete medical history and in performing a complete physical examination, including a pelvic examination, can perform the preoperative assessment. This person should be qualified to recognize and appropriately identify conditions that might lead to surgical complications. This person must be able to use the WHO Medical Eligibility Criteria to avoid complications without being overly cautious to pose a barrier in the provision of the service.

COMPONENTS OF THE PREOPERATIVE ASSESSMENT

The table below provides the WHO recommendation on the applicability of various procedures and tests for using contraceptive methods, including BTL.

Applicability of various procedures or tests for initiating use of contraceptive methods

Specific Situation	COC	CIC	POP	POI	Im-plants	IUD	Con-dom	BTL	Vasectomy
Breast exam by provider	C	C	C	C	C	C	C	C	NA
Pelvic/Genital exam	C	C	C	C	C	A	C	A	A
Cervical cancer screening	C	C	C	C	C	C	C	C	NA
Routine lab tests	C	C	C	C	C	C	C	C	C
Hemoglobin test	C	C	C	C	C	B	C	B	C
STI risk assessment: Med Hx & PE	C	C	C	C	C	A[1]	C[2]	C	C
STI/HIV screening: Lab tests	C	C	C	C	C	B[1]	C[2]	C	C
BP Screening	3	3	3	3	3	C	C	A	C[4]

Adapted from: WHO Medical Eligibility Criteria for Contraceptive Use, Third Edition, 2004

* Class A = essential and mandatory in all circumstances for safe and effective use of the contraceptive method

Class B = contributes substantially to safe and effective use, but implementation may be considered within the public health and/or service context. The risk of not performing an examination or test should be balanced against the benefits of making the contraceptive methods available.

Class C = does not contribute substantially to safe and effective use of the contraceptive method.

Notes

The Medical Eligibility Criteria for Contraceptive Use, Third Edition, 2004 states that:

[1] If a woman has a very high individual likelihood of exposure to gonorrhea or chlamydial infection, she should generally not have an IUD inserted unless other methods are not available or not acceptable. If she has current purulent cervicitis or gonorrhea or chlamydial infection, then she should not have an IUD inserted until these conditions are resolved and she is otherwise medically eligible.

[2] Women at high risk of HIV infection should not use spermicides containing nonoxynol-9. Using diaphragms and cervical caps with nonoxynol-9 is not usually recommended for women at high risk of HIV infection unless other more appropriate methods are not available or not acceptable. The contraceptive effectiveness of diaphragms and cervical caps without nonoxynol-9 has been insufficiently studied and should be assumed to be less than that of diaphragms and cervical caps with nonoxynol-9.

[3] It is desirable to have blood pressure measurements taken before initiation of COCs, CICs, POPs, POIs, and implants. However, blood pressure measurements are unavailable in many settings, pregnancy morbidity and mortality risks are high, and hormonal methods among the few methods widely available. In such settings, women should not be denied the use of hormonal methods simply because their blood pressure cannot be measured.

[4] For procedures performed using local anesthesia with ephedrine.

In the preoperative assessment, the provider takes a complete medical history and conducts a physical examination. Laboratory tests are performed only to confirm abnormal findings from the medical history and/or physical examination.

The ***medical history*** that is taken must be complete, whether or not questions are specifically related to the surgical procedure. The Family Planning Service Record (FP Form 1) is the standard form of the Department of Health for recording the health condition of family planning clients. As contained in the FP Form 1, the medical history includes a history of past medical conditions (related to each organ system), a reproductive health history (e.g., number of pregnancies, number of living children and their age, last pregnancy outcome, and last normal menstrual period, contraceptive history, and history and risk for STIs) and the history of any previous surgeries, allergies, and medications. Clients should be asked about any current illnesses or any symptoms that could add risk to the procedure or that could warrant a postponement.

The ***physical examination*** should include taking and documenting vital signs and conducting a cardiopulmonary, abdominal, and gynecological examination. For clients who will undergo interval or post-abortion minilaparotomy, the physical examination should include a bimanual pelvic examination to determine the position, flexion, mobility, size, shape and condition of the uterus. The mobility of a retroverted or retroflexed uterus should be carefully assessed. Although the surgeon may be able to gain access to the tubes by means of the uterine elevator, a uterus that is retroverted and retroflexed and fixed will not be elevated easily and may require a different surgical approach through a larger incision or more anesthesia.

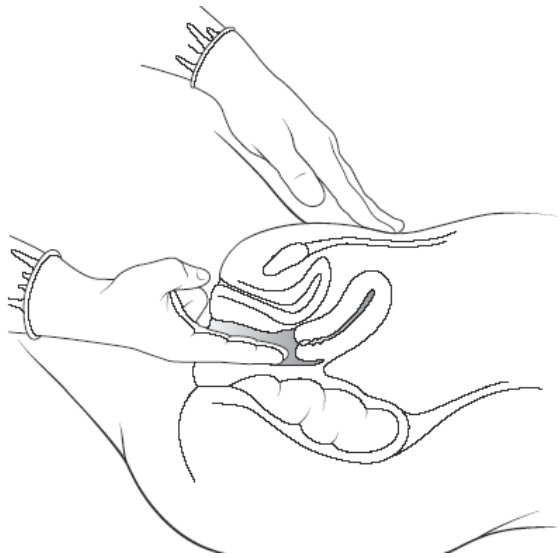

Bimanual pelvic examination of a normal anteverted uterus

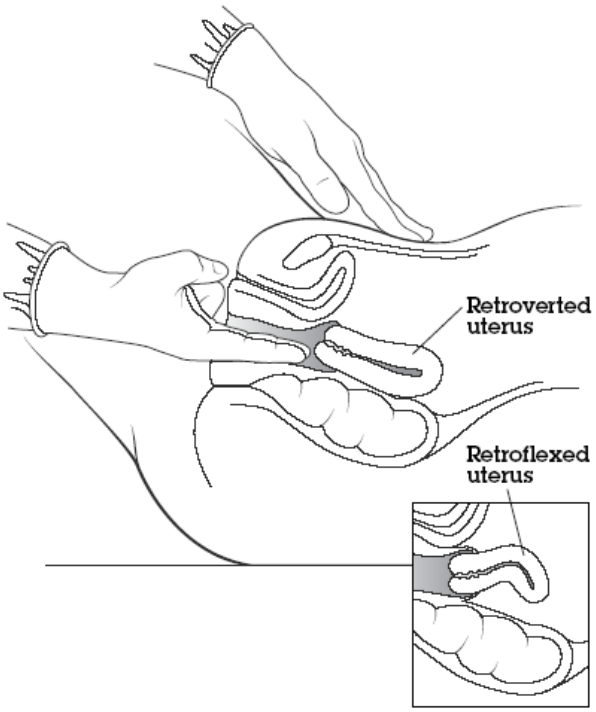

Bimanual pelvic examination of a retroverted or retroflexed uterus

In addition to the usual history-taking, the presence of any complicating conditions related to the delivery (e.g., potential infection, excessive blood loss during delivery or immediate postpartum, and complications associated with pregnancy-induced high blood pressure) should be assessed. The well-being of the baby should also be assured. An abdominal examination is important for assessing the size and relative location of the uterine fundus. A bimanual examination need not be performed.

For post-abortion clients, the provider must be sure that there is no infection, uterine perforation, or significant blood loss. Uterine size should also be assessed, as this will influence the surgical approach selected.

Diagnostic ***laboratory tests*** such as hematocrit or hemoglobin are necessary only when warranted by the client's history or the results of the physical examination.

The possibility of pregnancy must also be ruled out, but there is no need to perform a pregnancy test. Instead, the provider may use the algorithm below on "How to Be Reasonably Sure a Client Is Not Pregnant".

No		Yes
	1. Did you have a baby less than six months ago, and are you fully or nearly fully breastfeeding *and* have had no menstrual period since then?	
	2. Have you abstained from sexual intercourse since your last menstrual period?	
	3. Have you had a baby in the past four weeks?	
	4. Did your last menstrual period start within the past seven days?	
	5. Have you had a miscarriage or abortion in the past seven days?	
	6. Have you been using a reliable contraceptive method consistently and correctly?	

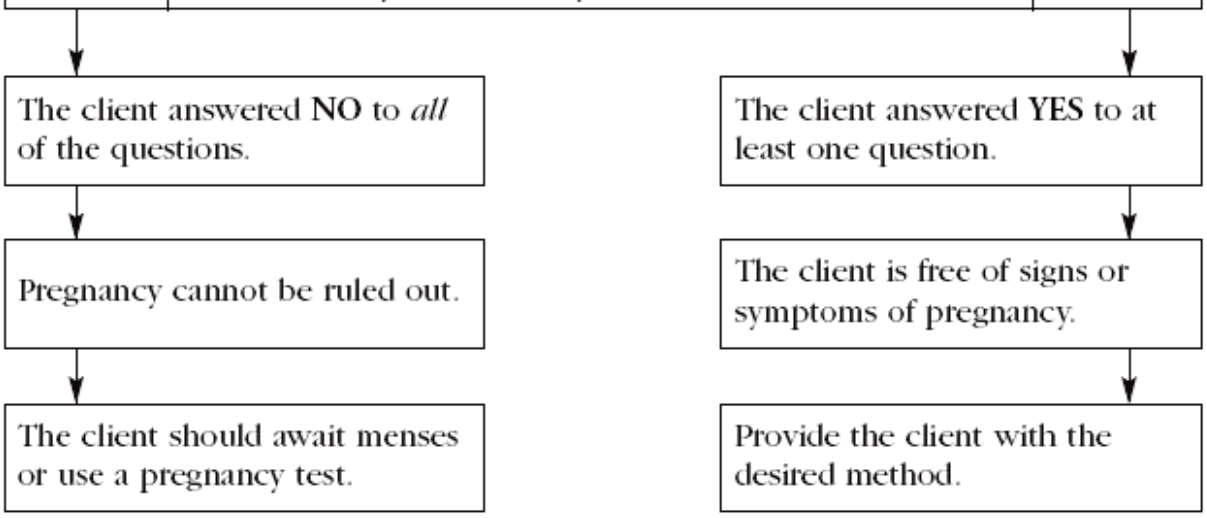

MEDICAL ELIGIBILITY CRITERIA FOR BTL

There is no medical reason that would absolutely restrict a woman's eligibility for BTL. However, not all women are eligible for BTL/MLLA. Some conditions and circumstances, which should be identified during the preoperative assessment, may indicate the need to take certain additional precautions. The WHO guidelines for screening clients for BTL with recommendations on their eligibility given certain conditions are given below.

For clients who are not eligible for BTL/MLLA, the following options are offered during counseling:

- BTL under spinal or general anesthesia in facilities capable of providing services. The client may need to be referred to these facilities.
- Choosing long-term temporary FP methods (i.e., IUD, injectables, implants)

Adapted from

World Health Organization (WHO) Screening Guidelines for Female Sterilization

Surgical Sterilization Procedures

Considering the irreversibility or permanence of sterilization procedures, special care must be taken to ensure that the client has made a voluntary informed choice to have the procedure. Particular attention must be given in the case of young people, nulliparous women, and male partners who have not yet been fathers, and in clients with mental health problems, including depressive conditions. All women should be counseled about the permanence of sterilization and the availability of alternative, long-term, highly effective methods; this is of extra concern for young people. The national laws and existing norms for the delivery of sterilization procedures must be considered in the decision-making process.

There is no medical condition that would absolutely restrict a person's eligibility for sterilization. Some conditions and circumstances indicate that certain precautions should be taken.

The classification of conditions into the different categories is based on an in-depth review of the epidemiological and clinical evidence relevant to medical eligibility. The programmatic implications of these updated medical criteria are still to be addressed, taking into account the various levels of service delivery. However, for the particular case of sterilization procedures, the following category definitions were developed.

Definitions

A **Accept:** There is no medical reason to deny sterilization to a person with this condition.

C **Caution:** The procedure is normally conducted in a routine setting, but with extra preparation and precautions.

D **Delay:** The procedure is delayed until the condition is evaluated and/or corrected. Alternative temporary methods of contraception should be provided.

S **Special:** The procedure should be undertaken in a setting with an experienced surgeon and staff, equipment needed to provide general anesthesia, and other back-up medical support. For these conditions, the capacity to decide on the most appropriate procedure and anesthesia regimen is also needed. Alternative temporary methods of contraception should be provided, if referral is required or if there is otherwise any delay.

Sterilization does not protect against sexually transmitted infections (STIs) or HIV; if there is risk for STIs or HIV (including during the postpartum period), the correct and consistent use of condoms is recommended, either alone or with another contraceptive method. Male latex condoms are proven to protect against STIs and HIV.

The latest WHO MEC for Female Sterilization is provided in Annex B. For easy reference, a summary of conditions that would warrant "delay" or "special" consideration of BTL/MLLA is provided in the table below.

Conditions warranting either delay of surgery or observation of special considerations before surgery is performed	
DELAY	**SPECIAL**

• Pregnancy
• Postpartum
  - 7 up to 42 days
  - Severe preeclampsia or eclampsia
  - Prolonged rupture of membranes (24 hours or more)
  - Puerperal sepsis or intrapartum or puerperal fever
  - Severe antenatal or postpartum hemorrhage
  - Severe trauma to the genital tract
• Post-abortion
  - Post-abortion sepsis or fever
  - Severe trauma to the genital tract
  - Acute hematometra
• Deep vein thrombosis or pulmonary embolism
  - Current deep vein thrombosis or pulmonary embolism
  - Major surgery with prolonged mobilization
• Current or history of ischemic heart disease
• Unexplained vaginal bleeding
• Malignant gestational trophoblastic disease
• Cervical, endometrial, or ovarian cancer
• Pelvic inflammatory disease (current or within the last 3 months)
• Current sexually transmitted infections (including purulent cervicitis)
• Current gallbladder disease
• Active viral hepatitis
• Iron deficiency anemia (Hg <7g/dl)
• Abdominal skin infection
• Acute bronchitis or pneumonia
• Gastroenteritis
	• Postpartum uterine rupture or perforation
	• Post-abortion uterine perforation
	• Multiple risk factors for arterial cardiovascular disease
	• Hypertension
	  - Systolic blood pressure >160 mmHg or diastolic blood pressure >100 mmHg
	  - Vascular disease
	• Complicated valvular heart disease
	• Endometriosis
	• AIDS
	• Tuberculosis or known pelvic infection
	• Diabetes with nephropathy, retinopathy, or neuropathy
	• Hyperthyroidism
	• Decompensated severe cirrhosis
	• Coagulation disorders
	• Chronic respiratory diseases
	• Hernia of the abdominal wall or umbilicus

Adapted from WHO, 2002

CLIENT PREPARATION

Scheduling

After being counseled and undergoing pre-operative assessment, clients who will undergo BTL should be scheduled for surgery. Scheduling includes:

- setting a time
- providing alternative contraception, if needed

- providing preoperative and postoperative instructions

Setting a time

For the interval client, BTL can be performed at any time the provider can be reasonably sure that the woman is not pregnant.

For postpartum clients, the time for surgery is set usually within 48 hours up to 7 days of delivery.

Post-abortion clients can undergo the procedure within the first 6 hours up to 7 days after uterine evacuation.

Providing temporary contraception

If pregnancy cannot be rule out, if any condition requires a delay in performing the surgery, and if the client is not already using a reliable method of contraception, the client should be offered a reliable method of contraception so she is protected from pregnancy until her surgery can be performed.

Providing preoperative information and instructions

Preoperative information and instructions are important. To inform and reassure the client, these should be given in advance, letting her know what to expect during the procedure. This is the key to the success of local anesthesia and decreases the need for sedation and analgesia. Preoperative information and instructions should be given both verbally and in writing. Using simple terms, the counselor provides the following information:

- The steps of the operation
- The anesthesia regimen to be used, an explanation that some discomfort might occur, and encouragement for the client to ask questions
- That the client should not eat any solid food for at least six hours before surgery, but may take clear fluids up to two hours before surgery.
- The need for interval clients to bathe, clean the genital area and operative site, and remove jewelry, make-up, and nail polish on the day of the surgery.
- The importance of having a responsible adult to take the client home from the facility after the procedure.

In addition, information about what to expect after the surgery should be provided at this time and it should include the following:

- Needed rest, wound care, and when to restart normal activities(including intercourse)
- Warning signs to be aware of, what to do in each case, and where to go in the event those complications arise.
- When and where to go for the follow-up visit

Providing postoperative instructions

After surgery, the information already provided regarding postoperative care should be reiterated and reviewed. These instructions are especially important in helping women recognize warning signs and seek timely care. Clients should receive written instructions just before they leave the facility, with special attention to the following:

- Rest for the remainder of the day. Resume normal activities after two or three days.
- Avoid intercourse until comfortable.
- For relief of pain, take simple analgesics like paracetamol every four hours.
- Keep the wound clean and dry.
- The stitches will dissolve and do not have to be removed.
- Keep in mind where to go for urgent care in case warning signs develop, such as:
  - Fever
  - Persistent and increasing pain in the abdomen
  - Bleeding from the incision site
  - Suspected pregnancy

Below is a sample of a written preoperative and postoperative instruction which can be translated in the dialect.

SAMPLE
PREOPERATIVE AND POSTOPERATIVE INSTRUCTIONS TO CLIENTS
(Oral and Written)

What You Should Know About Your Sterilization Operation

This leaflet contains important information that you need to know. It tells you how to prepare for your sterilization operation and how to take care of yourself afterwards.

Remember, sterilization is a surgical procedure. It is meant to be permanent. After sterilization, you will no longer be able to get pregnant. If you have any questions or doubts, talk to the clinic staff. We are here to help you.

Before going to the clinic:

1. Do not eat any solid food for at least six hours before surgery; but you may drink clear fluids up to two hours before the operation. You will be able to eat and drink after the operation.
2. Have a bath. Carefully wash your belly button, belly, and genital area using soap.
3. Wear clean, loose clothing.
4. Arrange for a family member or friend to come to the clinic to help you home after the operation.

When you return home:

1. Rest for one or two days at home. You will probably be able to resume most of your normal activities within three to five days. Avoid heavy work or lifting for one week. This will help the wound heal.
2. Do not let the bandage get wet for one or two days.
3. Take the medicine provided by the clinic.
4. You may have sex as soon as it is comfortable for you. This is usually about one week after the operation.
5. Avoid pulling, scratching, or irritating the wound.
6. It is important for you to know what is normal following your surgery. There will probably be some pain and swelling around the wound. This is normal and should not worry you.
7. Return to the clinic and notify the doctor or health worker if you have any of the following, or if you notice any unusual body changes:
   - Fever within one week of the operation
   - A pain in your belly that does not go away or that becomes worse
   - Bleeding or pus coming from the wound
   - Signs that you may be pregnant - a missed period, stomach pains, or dark or spotty bleeding between periods (Watch for these signs at any time after the operation. They may mean that the operation has failed and that you may be pregnant.)

For any of these problems, you should telephone or go to the following location for medical care without delay:

_____

_____

(add appropriate address)

Telephone Number:_____

(Adapted from: WHO, 1992)

Session 7

THE LOCAL ANESTHESIA REGIMEN

OVERVIEW

Minimizing psychological and emotional distress and trauma to the client, and freeing her from pain and discomfort increases acceptance of BTL/MLLA. While anesthesia regimens may vary depending on local practices, every minilaparotomy program should adopt and implement simple, standard analgesia and anesthesia regimens in order to ensure quality control. Local anesthesia with analgesia and/or light sedation is both suitable and safe for minilaparotomy.

This session provides trainees with the knowledge on the local anesthesia regimen appropriate for MLLA.

LEARNING OBJECTIVES

At the end of the session, the participants will be able to:

1. State the goals of anesthesia and analgesia.
2. Explain the choice of local anesthesia with systemic analgesia for BTL/MLLA.
3. Discuss the preparation of the client for local anesthesia.
4. Describe the drugs used for local anesthesia with systemic analgesia.
5. Discuss the guidelines for using local anesthesia.
6. Enumerate the steps of infiltrating local anesthesia relevant to BTL/MLLA.
7. Explain how clients on local anesthesia with systemic analgesia are monitored.

REFERENCES

Jacobstein R., Cordero C., and Ahlborg J. Pain Management for Female Sterilization by Minilaparotomy. ACQUIRE Clinical Update. USAID. August 2007

Nisanian A. Outpatient minilaparotomy sterilization with local anesthesia. *J Reprod Med* 1990; 35:380–3.

Otolorin E.O., Ladipo O.A., Ojo O.A. Outpatient interval BTL at the University College Hospital, Ibadan, Nigeria. *Afr J Med Sci* 1985; 14:3–9.

NARRATIVE

The goals of analgesia and anesthesia are to minimize psychological and emotional distress and trauma to the client, and to free her from pain and discomfort. While anesthesia regimens may vary depending on local practices, every minilaparotomy program should adopt and implement simple, standard analgesia and anesthesia regimens in order to ensure quality control. Local anesthesia with analgesia and/or light sedation is both suitable and safe for minilaparotomy.

When choosing standard regimens, program managers and decision-makers must be certain that the regimens can be administered properly. The regimens must be within the technical capability of the doctor and other program staff who administers anesthesia and sedative drugs, and who monitors the client during surgery and recovery. The drugs chosen for the regimen must be safe, affordable, readily available, and procurable. Their duration of effect must be compatible with the short duration of the surgical procedure—that is, the effects of analgesia and anesthesia must not last significantly longer than the surgical procedure itself. Local anesthesia augmented by systemic analgesia is particularly well suited for outpatient settings.

Local anesthesia produces a local block, and can be augmented with mild systemic analgesia and/or light sedation. The client is awake, responsive, and cooperative. Special equipment is not needed, nor is the presence of an anesthetist required, but if present s/he can administer the sedative and monitor the client. For programs providing minilaparotomy, local anesthesia is the safest regimen. The primary danger in using local anesthesia with sedation is respiratory depression due to excessive narcosis from the sedative medication. Staff must be alert to the action of the drugs and must always use the minimum effective dosage.

EMOTIONAL READINESS OF THE CLIENT

To ensure that the client is prepared for the procedure, a doctor, nurse, or counselor explains to her before surgery what to expect in the operating room. For the client to remain calm, it helps if she is aware of what she will see, hear, and feel, and how long she will be in the operating room and the recovery room. Staff should reassure the client and answer any questions. All staff must be especially alert for clients who are extremely anxious about undergoing MLLA. Such clients may find it difficult to relax or remain calm during the procedure and should be offered an alternative anesthesia regimen.

TALKING TO THE CLIENT DURING SURGERY

To keep the client calm, operating room staff should speak to the woman throughout the procedure, reassuring her, distracting her, and explaining what is happening. If the client is comfortable and prefers to sleep, the staff should respect this and not disturb her excessively. By observing the woman and how she feels, staff will know if she is experiencing pain and will be able to recognize early signs of complications. Through communication, staff must monitor agitation, difficulty in breathing, or any change in the level of consciousness.

STAFF RESPONSIBLE FOR ADMINISTRATION OF DRUGS

In most facilities a nurse gives the premedication, and the doctor performs infiltration of local anesthesia, but no strict rule governs who will give additional medication if needed. This is a matter program managers must clarify at the outset, so that responsibilities are clearly understood. Much depends on the level of knowledge and the skills of the various members of the surgical team. In the absence of an anesthetist, the doctor must ensure that the person giving medications is skilled in their

administration or is closely supervised. If not, the doctor must decide how to handle emergency situations. In some cases, it may become necessary for the doctor to stop the surgery in order to give emergency treatment, and then re-glove to finish the procedure.

Because the specific title of the person who will be responsible for the administration of all the drugs varies, the word "staff" is used in the following description of drug regimens.

PREOPERATIVE MEDICATION

Premedication is used to reduce fear and anxiety. It can provide analgesia, prevent postoperative nausea and vomiting, and induce amnesia.

If premedication is given orally, it should be administered early enough to be working by the time anxiety-provoking preparations begin. A recommended regimen is as follows: Between 30 and 60 minutes before the operation, staff sedates the client with diazepam 10 mg given orally with a sip of water. If the client weighs less than 35 kg (75 lb.), the dose is reduced to 5 mg. Premedication with a non-steroidal anti-inflammatory drug (NSAID) (for example, ibuprofen 800 mg) may also be used to reduce uterine cramping. Atropine is administered before anesthesia to prevent bradycardia and lessen the possibility of vasovagal syncope and cardiac arrest. If additional sedatives or narcotic analgesics are utilized, the minimum dose should be given intravenously by slow injection immediately before the procedure. The client should be on the operating table when IV medications are given and monitored closely.

INFILTRATION OF LOCAL ANESTHESIA

The goal is to achieve an anesthetic block that includes all layers of tissue from skin to peritoneum. The anesthetic will spread both above and below the line of infiltration in the subcutaneous space. It may be necessary to augment the anesthesia as the fascial and peritoneal layers are exposed. In addition, lidocaine may be dripped on each tube for additional anesthesia before performing occlusion. The total dose of lidocaine 1% without epinephrine should not exceed 5 mg/kg [20 ml for 40-kg (88 lb.) body weight]. If the lidocaine is supplied in 2% strength (10 ml for 40 kg body weight), it can be diluted with normal saline or sterile water for injection. The 1% strength results in better volume for more effective infiltration. (Some doctors prefer to dilute even further, to 40 ml of 0.5% strength.)

Protocol for Local Infiltration

The "diamond-shaped" and "fan-shaped" anesthesia blocks are two alternative techniques.

In the diamond-shaped technique, the needle enters the skin in the midline of the incision site, and is inserted in both lateral directions along the incision line. Through the same puncture site, the needle is inserted at a 45-degree angle to the fascia in four directions, thus creating the diamond shape. A 90-degree infiltration of the peritoneum completes the procedure. The fascia and peritoneum are infiltrated with 2-3 ml lidocaine in each direction. Make sure aspiration is carried out each step prior to infiltration.

Field block using the diamond-shaped technique

(a) Entry of the needle at the incision site

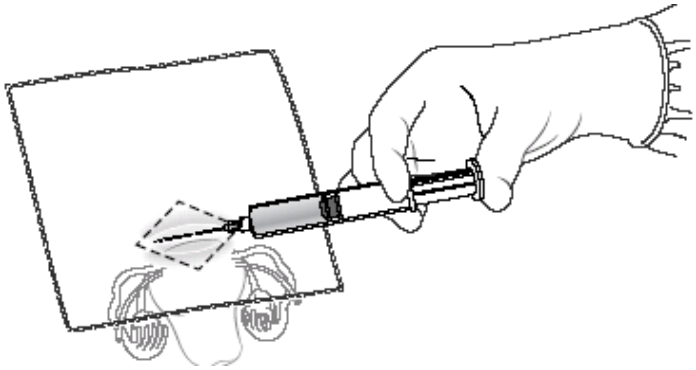

(b) Skin infiltration

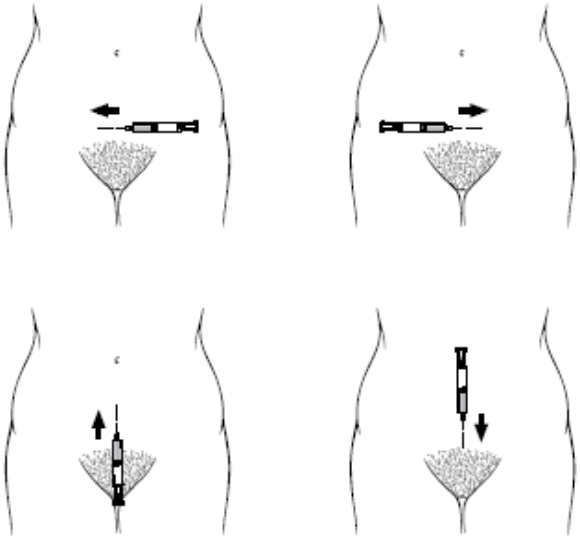

(c) Infiltration of the different layers

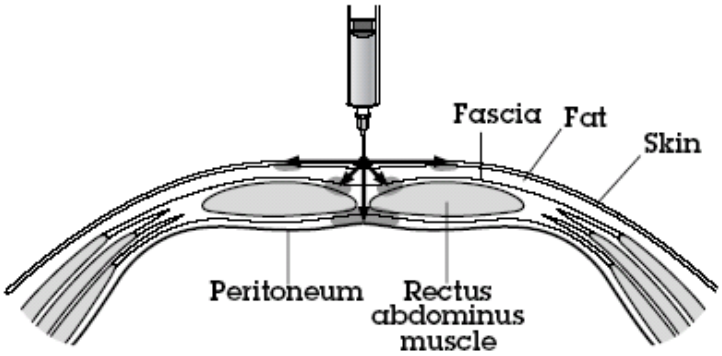

In the fan-shaped technique, the needle is inserted at one end of the skin incision site and along the incision line. Through the same puncture site, the needle is inserted at a 45-degree angle to the fascia. The needle is then withdrawn to the subcutaneous tissue and inserted at 90 degrees, and straight down going through the rectus sheath and muscle into the peritoneum, thus creating the fan shape. In each step, the local anesthetic is infiltrated along the needle track as the needle is withdrawn slowly. Six to eight ml lidocaine is injected into the fascia and 2-3 ml into the peritoneal layer. Aspiration is done after every injection and prior to infiltration.

Field block using the fan-shape technique

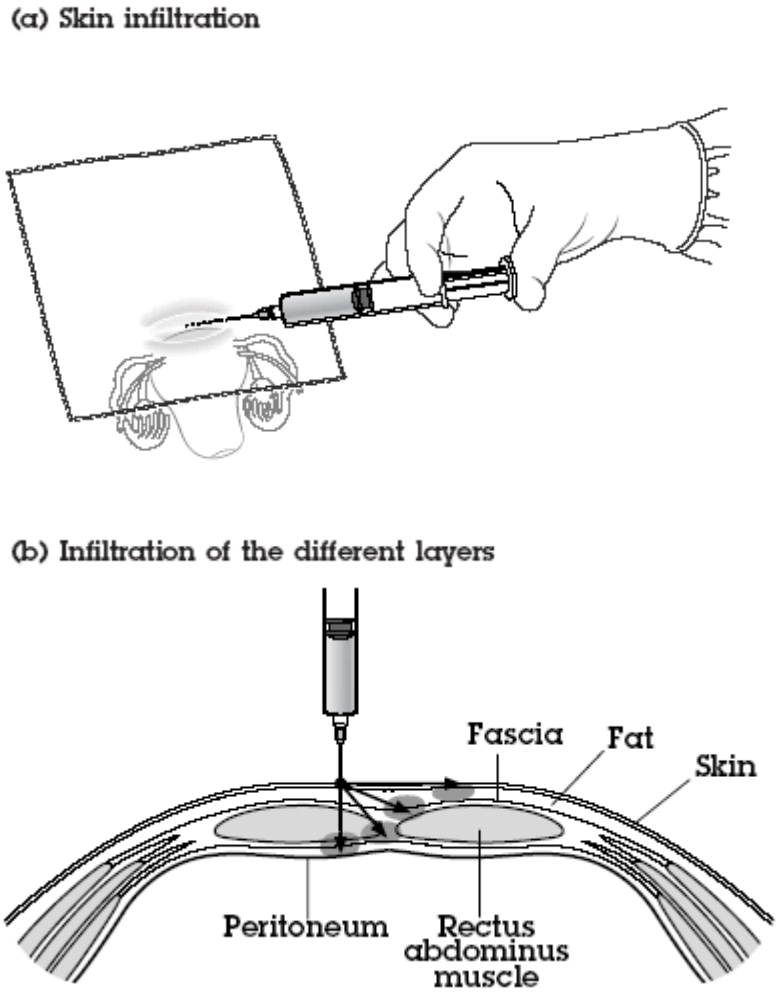

Source: *Minilaparotomy for BTL: An Illustrated Guide for Service Providers*, EngenderHealth (New York: 2003).

To spread the anesthetic into the tissues, the doctor gently massages the skin.

A 2–3-minute waiting period enables the anesthetic to take effect. The anesthesia is tested. If the client can feel a needle prick, the doctor waits an additional 2–3 minutes and tests again. The lidocaine that is remaining in the syringe (about 5 ml) is reserved for supplemental use on the fascia, peritoneum, and tubes, as needed.

MONITORING VITAL SIGNS

Client vital sign monitoring must be thoroughly ingrained in staff members' minds as part of the routine practice of minilaparotomy. All staff members should receive training in the method and frequency of monitoring the client. Local anesthetic and analgesic agents and sedatives may cause respiratory depression, cardiovascular depression, hypersensitivity reactions, and central nervous system toxicity. Knowledge of the etiology and symptomatology of these reactions enables intervention that may prevent severe complications.

Staff must recognize normal and abnormal reactions to drugs used during the procedure. Changes in the client's condition must be noted. Monitoring and recording blood pressure, pulse, and respiration rate are part of the staff's responsibilities. Vital signs are checked before, during, and after the operation until the client is fully recovered. The frequency of monitoring should follow these guidelines:

Preoperative: Blood pressure, pulse, and respiration should be monitored and recorded before and after the preoperative dose of sedative is given. This provides the baseline data for the client.

Intraoperative: A staff member of the team should monitor and record blood pressure, pulse, and respiration at least three times during surgery. To assess the status of analgesia, the staff member should converse with the client continually.

Postoperative: Blood pressure, pulse, and respiration must be monitored and recorded at least every 15 minutes until stable (i.e., vital signs have returned to preoperative levels). Under no circumstances should the client be left alone.

PHARMACOLOGY OF DRUGS RELEVANT TO LOCAL ANESTHESIA

Lidocaine Hydrochloride (Xylocaine, lignocaine)

Action: Local anesthetics act by preventing generation and transmission of impulses along nerve fibers and at nerve endings. Although toxicity occasionally occurs as a result of overdose with local anesthetics, allergic reactions to the amide-linkage drugs, such as lidocaine and bupivacaine, are exceedingly rare. In fact, it is questionable whether true anaphylaxis to lidocaine given **without epinephrine** has ever been shown.

Dosage: The usual dose for minilaparotomy under local anesthesia is 20 ml of 1% lidocaine. The maximum safe dose of 1% lidocaine without epinephrine is 5 mg/kg body weight. For a woman weighing 40 kg (88 lb.), this is equivalent to 200 mg, or 20 ml, of 1% lidocaine (or 10 ml of 2% lidocaine).

Regimen: Through a single incision site, the doctor locally infiltrates 1% lidocaine without epinephrine, about 15 ml, into the skin, fascia, and peritoneum. After waiting 2–3 minutes for the local field block to take effect, the doctor may begin surgery. The remaining 5 ml of the lidocaine is used to augment the anesthesia block as needed.

One may elect to use 0.5% lidocaine and inject a greater volume. However, 2% solutions should routinely be diluted with normal saline to make a 1% strength, because the more concentrated 2% solution (with a maximum dose of 5 mg/kg) will not allow enough volume to provide adequate infiltration of all tissue layers, and if accidentally injected into the blood stream may be cardiotoxic.

***Warnings*:** Adverse effects may occur as a result of the addition of a vasoconstrictor (epinephrine).

Adverse effects of lidocaine on the central nervous system and cardiovascular system are seen after accidental intravenous injection. The client usually first complains of numbness of the tongue and

mouth, lightheadedness, tinnitus, visual disturbances, and slurring of speech. She may lose consciousness and have convulsions. If the injection is stopped, the drug passes rapidly, and the convulsions will stop within 2 minutes. Coma can occur if the intravenous dose is very high (2% injected rapidly).

The doctor must pull back the plunger of the syringe when injecting each tissue layer to ensure that the solution is not being injected into a vessel; all injections are to be given slowly.

Meperidine Hydrochloride (Pethidine, Demerol)

***Action*:** Meperidine is a narcotic analgesic similar to morphine, used for preoperative medication as an adjunct to local anesthesia and for the relief of pain that might result from the procedure.

Dosage: The usual initial adult dose for analgesia as a preoperative medication for ML/LA is 50 mg, given intravenously. If the client is experiencing pain during the procedure, staff may administer an additional dose, up to 25 mg. The initial dose of 50 mg should be reduced by one-half (down to 25 mg) for clients weighing less than 35 kg (75 lb.).

Regimen: Before surgery, with the client on the operating table, staff gives half of the drug intravenously over a period of 30 seconds, and note any negative effects. If client has none, staff gives the remaining dose over another period of 30 seconds. If the client becomes excessively drowsy after the first half of the dose, the second half is not injected.

Warnings: Respiratory depression, hypotension, and profound sedation or coma may result when meperidine is combined with a sedative, such as diazepam or midazolam. Only persons specifically trained in the use of intravenous medications, in monitoring anesthesia, and in the management of the respiratory depression that may result should administer intravenous meperidine. Rapid intravenous injection of meperidine increases the incidence of adverse reactions.

Like other narcotics, meperidine may produce orthostatic hypotension in ambulatory patients. Clients may experience side effects when starting to ambulate. The most frequently observed adverse reactions include lightheadedness, dizziness, sedation, nausea, vomiting, and sweating. These reactions may be alleviated if the client lies down.

When meperidine is used intravenously, naloxone, oxygen, and resuscitative equipment must be readily available for reversal of respiratory depression.

Note: Staff must instruct clients receiving meperidine not to drive a vehicle or operate machinery for 24 hours.

Treatment of overdose: One should administer oxygen, intravenous fluids, vasopressors, and other supportive measures as indicated. As a specific antidote, an immediate intravenous dose of naloxone is given (see page 62).

Nalbuphine Hydrochloride (Nubain)

Action: Nalbuphine is a potent analgesic, essentially equivalent to morphine. Its onset of action is within 2–3 minutes after intravenous administration. The effects of the drug last for 3–6 hours.

Dosage: The usual adult dose is 10 mg/70 kg (150 lb.). Nalbuphine is supplied in two formulations, either 10 mg/ml or 20 mg/ml, so the volume in milliliters administered must be based on the strength of the formulation.

Regimen: To provide analgesia to accompany the use of local anesthesia for outpatient procedures, staff give nalbuphine intravenously on the operating room table, just prior to the surgery.

Warnings: Only persons specifically trained in the use of intravenous medications, in monitoring anesthesia, and in the management of the respiratory depression that may result should administer nalbuphine. Nalbuphine may cause significant respiratory depression.

Naloxone, oxygen, and resuscitative equipment should be readily available.

The most frequent adverse reaction is sedation. Other reactions are sweaty or clammy skin, nausea or vomiting, dizziness or vertigo, dry mouth, and headache.

Note: Staff must instruct clients receiving nalbuphine not to drive a vehicle or operate machinery for 24 hours.

Treatment of overdose: Staff administers oxygen, intravenous fluids, vasopressors, and other supportive measures as indicated. As a specific antidote, an immediate intravenous dose of naloxone is given (see below).

Naloxone Hydrochloride (Narcan)

Action: Naloxone is indicated for the reversal of respiratory depression caused by narcotics, including meperidine (pethidine, Demerol), nalbuphine (Nubain), butorphanol (Stadol), fentanyl (Sublimaze), and pentazocine (Talwin). Naloxone has no toxicity.

Dosage: The initial dose is 0.4 mg given intravenously. Staff gives repeat doses intravenously at intervals of 2–3 minutes until the desired degree of reversal (adequate ventilation and alertness) is achieved. Several doses of naloxone, up to 2 mg, even over a short period, may be given without untoward effects.

Regimen: Naloxone is administered intravenously for a rapid onset of action apparent within 2 minutes. The requirement for repeat doses of naloxone will depend on the amount, type, and route of administration of the narcotic being antagonized.

Warnings: If staff observes no response after a total dose of 2 mg, they should consider other causes of respiratory depression, such as overdose of diazepam or hypoxia due to internal hemorrhage.

Staff must monitor the client closely because the effect of the narcotic causing the depression may outlast the effect of naloxone.

Naloxone is not effective against respiratory depression due to non-narcotic drugs, such as diazepam and midazolam.

In addition to naloxone, resuscitative measures such as maintenance of a free airway, artificial ventilation, cardiac massage, and vasopressor agents must be available and employed when necessary to counteract acute narcotic oversedation.

Naloxone ampules and vials show an expiration date. Because this drug is not used frequently, the supply may not be fresh. Injections repeated at shorter intervals, or increased doses, may be needed for effectiveness if the expiration date has passed. Efforts should be made to insure unexpired medication.

Promethazine Hydrochloride (Phenergan)

Action: Promethazine is a phenothiazine tranquilizer. It has antihistaminic, sedative, antiemetic, and anticholinergic effects. Promethazine can be used in ML/LA for preoperative sedation, for prevention and control of nausea and vomiting, and as an adjunct to analgesics for control of intraoperative and postoperative pain.

Dosage: For preoperative and postoperative medication, the usual adult dose is 25 mg or 50 mg.

Regimen: For anesthesia premedication, promethazine is administered intramuscularly.

Warnings: Promethazine adds to the sedative effect of narcotics. If it is given with meperidine before a minilaparotomy, the dose of meperidine should be reduced by ¼ to ½.

Administration of promethazine should not be intravenous or subcutaneous, because this may result in tissue necrosis.

Diazepam (Valium, Anxionil)

***Action*:** Diazepam is a benzodiazepine with anticonvulsant, anxiolytic, sedative, muscle-relaxant, and amnesic properties. Diazepam is a useful premedication for clients who will undergo ML/LA, to induce a calming effect.

Dosage: For clients over 35 kg (75 lb.), the dose is 10 mg given orally. If a client weighs less than 35 kg, the dose should be reduced to 5 mg given orally. One should use a lower dose (usually 2–5 mg) for debilitated clients.

Regimen: Diazepam can be given by mouth, at least 30 minutes before the procedure, with a sip of water.

Diazepam may be given intravenously at the start of the procedure only when the solution is injected slowly—at least 1 minute for each 5 mg (1 ml) given. It must not be injected into small veins, such as those on the back of the hand or the inside of the wrist. Extreme care must also be taken to avoid intra-arterial administration or extravasation. When administered intravenously, diazepam must not be diluted or mixed with other solutions or drugs in the syringe. If diazepam cannot be administered directly intravenously, it may be injected slowly through the infusion tubing as close as possible to the needle insertion site. Intramuscular administration for premedication usage is to be avoided, since the duration of maximum effect is not predictable.

When diazepam is used with a narcotic analgesic, such as meperidine, as the preoperative medication for ML/LA, staff should reduce the narcotic dosage by at least one-third and administer it in small increments. In some cases, the use of a narcotic may not be necessary.

Warnings: When diazepam is combined with the use of a narcotic (such as meperidine) or other sedative, respiratory depression is increased. Therefore, oxygen and resuscitative equipment must be readily available. Side effects most commonly reported are drowsiness, fatigue, and ataxia. Other side effects are bradycardia, cardiovascular collapse, and hypotension.

Manifestations of diazepam overdose include somnolence and confusion.

Diazepam and ketamine, being chemically incompatible because of precipitate formation, **should not** be injected in the same syringe.

Treatment of overdose: Staff administer an antidote, such as physostigmine 0.5–1.0 mg intravenously, or flumazenil 0.2 mg intravenously, given over 30 seconds, with subsequent doses of 0.3 mg and then 0.5 mg given at 1-minute intervals up to a total dose of 3 mg.

Note: Naloxone used to reverse narcotic sedation will not reduce the sedation caused by diazepam.

Midazolam Hydrochloride (Versed, Dormicum)

Note: Midazolam should only be used with continuous oxygen saturation monitoring.

Action: Midazolam is a short-acting benzodiazepine that depresses the central nervous system; it is 3¼ times as potent as diazepam. It can be used as a preoperative sedative to induce a calming effect and to diminish the client's recall of a ML/LA. It can be used either alone or with a narcotic.

Dosage: For intramuscular preoperative sedation, the client may be given 5 mg (0.07–0.08 mg/kg body weight) about 1 hour before surgery. (This dose may be too high for many clients). A maximum dose of 3 mg is preferred. At a formulation of 1 mg/ml, the maximum dose would be 3 ml. For intravenous preoperative sedation, the initial dose is 0.5-1.0 mg. To achieve optimal sedation an additional 1.0 – 1.5 mg IV is given, however staff should carefully assess effects of Midazolam first. For debilitated clients, lower doses may be sufficient.

Regimen: Midazolam is administered intramuscularly or by slow intravenous route for preoperative sedation. Staff should not administer midazolam rapidly or as a single bolus intravenously. The 1-mg/ml formulation is recommended to facilitate slower injection. It may be diluted with 0.9% sodium chloride or 5% dextrose in water.

If narcotic premedication or other central nervous system depressants are used, patients will require 30% less midazolam.

Warnings: Intravenous midazolam has been associated with respiratory depression and respiratory arrest, especially when used for conscious sedation. In some cases, where staff have not recognized this promptly and treated it effectively, death or hypoxic encephalopathy has resulted.

Only hospitals or ambulatory care settings that provide for continuous monitoring of respiratory and cardiac function should use intravenous midazolam.

Resuscitative drugs and equipment and staff trained in their use must be immediately available.

It is unclear whether midazolam is excreted in human milk, so caution is necessary when the client is a nursing mother.

Treatment of overdose: Treatment is the same as that for diazepam. Staff administer an antidote intravenously, such as physostigmine, 0.5–1.0 mg intravenously, or flumazenil, 0.2 mg given intravenously over 30 seconds, with subsequent doses of 0.3 mg and then 0.5 mg given at 1-minute intervals up to a total dose of 3 mg.

Note: Naloxone will not reduce the sedation caused by midazolam

Below are recommendations for moderate analgesia and sedation for BTL/MLLA.

Drug	**Dosage/Route of Administration and Timing**
SEDATIVES	
Midazolam (rapid acting)	• IM: 2.5-10 mg., in the OR, 5-10 mins. prior to start of procedure • IV: 0.5-5 mg., given slowly immediately prior to start of procedure
Diazepam	• IV: 5-10 mg., given slowly immediately prior to start of procedure
NARCOTIC ANALGESICS	
Fentanyl (rapid acting)	• IV: 25-100µg immediately prior to the start of procedure

Drug	Dosage/Route of Administration and Timing
Meperidine	• IM: 50-150 mg., 5-10 mins. prior to start of procedure • IV: 25-100 mg., given slowly immediately prior to start of procedure
Nalbuphine	• IM: 5-10 mg. 5-10 mins. prior to start of procedure • IV: 5-10 mg., immediately prior to start of procedure

Adapted from: Jacobstein R., Cordero C., Ahlborg J. Pain Management for Female Sterilization by Minilaparotomy. ACQUIRE Clinical Update. USAID. August 2007.

Session 8

EMERGENCY PREPAREDNESS

OVERVIEW

For any surgical procedure using anesthetic regimen, careful and frequent monitoring of the client includes assessment of vital signs, level of consciousness, comfort, and sense of well-being. Monitoring before, during and after the procedure makes the surgical staff to detect possible complications requiring immediate emergency measure related to anesthesia or to the surgery.

This session provides service providers with the knowledge and skills in being prepared for emergency cases.

LEARNING OBJECTIVES

At the end of the session, the participants will be able to:

1. Discuss what staff must know and be able to do for emergency preparedness.
2. Enumerate equipment and drugs necessary for emergencies.
3. Explain what to do if the facility providing services have limited capabilities for handling emergencies.

NARRATIVE

STAFF PREPARATION FOR EMERGENCIES

Staff must take certain precautions and make preparations prior to minilaparotomy procedures to effectively manage emergencies. Staff must be skilled in administration of intravenous fluids and drugs. They must understand which drugs may be used, how to administer them, and their expected actions. They must be familiar with the use of all emergency equipment and must check all such equipment before each operating session. Members of the staff must be trained to handle specific complications. The staff monitoring the client in the operating and the recovery must be aware of early signs of complications and be able to take initial emergency action. At least one member of the surgical team must know how to administer cardiopulmonary resuscitation.

EMERGENCY EQUIPMENT

The equipment below must be available for emergency use in the operating room and recovery area. All emergency equipment must be immediately available, prepared for use, and in good functioning condition. A laryngoscope and endotracheal tubes are appropriate only when trained and experienced personnel are available to use them. A battery-operated light source should be available for backup or focused illumination of the operative site.

- Stethoscope/sphygmomanometer
- Nasopharyngeal/Oropharyngeal airways
- Oxygen tank with pressure-reducing valve, flow meter, rubber tubing and face mask
- suction apparatus manual with tubing and two straps
- Manual resuscitator with face mask
- Ambu bag
- Intravenous fluids and sterile infusion sets with large calibre needles
- Emergency drugs
- Full set of sterilized laparotomy instruments
- Emesis basin, mouth wipes, flashlights
- Syringes and needles
- Gauze pads and adhesive tapes

EMERGENCY DRUGS

The drugs listed in Table 8.1 must be readily available in the operating room and recovery area. Staff need to be well informed about the drugs; their use, dose, strength, and route of administration; signs of toxicity; and treatment of overdose.

Table 8.1 Emergency Drugs

DRUG/PREPARATION	CONDITION	DOSE	PRECAUTIONS	EFFECTS
Chlorpheniramine maleate 25 mg. tab 2 cc. amp.-25mg./cc.	Allergic reactions or anaphylactic reaction	With early symptoms (rashes, hives, rhinitis) give 25 mg. orally. If symptoms of respiratory difficulty give 50 mg. SC/IM or IV and follow with adrenaline	Causes drowsiness. Do not exceed 75 mgs. If anaphylaxis worsens give adrenaline.	***Allergic reaction and anaphylaxis:*** It is antihistaminic and will reduce the rash, hives, itching, congestion and inflammation caused by the allergic reaction. It is the first drug given when allergic symptoms are observed.
Adrenaline (Epinephrine) 1:1000	Severe asthma or Anaphylactic reaction	0.5 mg. SC or IM (Massage injection site). May repeat every 10 min. until symptoms improve.	1:1000 is not the concentration for IV use. 1:1000 preparation must be diluted in 10-20 cc. IV fluids to give by IV route. If symptoms progress give Dexamethasone.	***Asthma / anaphylaxis***: Adrenaline produces bronchodilation, which relieves breathing difficulties during bronchospasm. In small doses adrenaline causes vasodilation which can correct lung constriction and wheezing. Giving adrenaline during an anaphylactic reaction or acute asthma may save the client's life. ***Anaphylactic shock:*** In large doses, adrenaline is a vasoconstrictor that will raise blood pressure and pulse rate. Thus, adrenaline is a life-saving drug in anaphylactic shock. ***Cardiac arrest:*** Adrenaline produces cardiac and central nervous system stimulation. When there is no breathing and no or faint pulse, giving
	Cardiac arrest or no pulse or no breathing	0.5mg of 1:1000 diluted in 10-20 ml IV fluids or 0.5 mg of 1:1000 IV. May repeat every 3 minutes.	Do not give adrenaline 1:1000 IV undiluted or quickly. Adrenaline will precipitate if mixed with other IV drugs.	

DRUG/PREPARATION	CONDITION	DOSE	PRECAUTIONS	EFFECTS
				adrenaline is to attempt to stimulate the heart to begin beating again.
Atropine 0.6 mg./ml. 1cc./vial	Vaso-vagal reaction/syncope (fainting)	0.6mg./ml.	Side effects of dry mouth and tachycardia (rapid heart rate)	***Vaso-vagal syncope (fainting from severe fear or pain):*** Atropine increases the heart rate and cardiac output.
	Cardiac arrest	0.6mg./ml.	1mg IV may be repeated every 5 min. to total of 3 mg.	Atropine is effective in faintness after/during a procedure (MLLA, IUD insertion) ***Cardiac arrest:*** atropine increases heart rate of pumping and may correct dysrhythmias caused by slow rate. ***Pre-surgery:*** Atropine is used as a premedication for surgery, as it decreases secretions (respiratory and GI tracts) and may prevent a slow heart rate (bradycardia) which is the side effect of some pain medications (Pentazocine) used during tubectomy.
Dexamethasone 4mg./cc./vial	Anaphylaxis or severe asthma	8 mg. IV	Hydrocortisone 200 mg. if Dexamethasone is not available.	***Anaphylaxis or severe asthma***: During an asthma attack or severe allergic reaction the body reacts with inflammation/swelling. Dexamethasone and

DRUG/PREPARATION	CONDITION	DOSE	PRECAUTIONS	EFFECTS
				hydrocortisone are corticosteroids that decrease inflammation and increase the capillary permeability. In asthma or anaphylactic reaction, a steroid will ease the breathing difficulties. Steroids also are used in cerebral edema and septic shock.
Diazepam 2 cc. vial- 5 mg./cc.	Seizure	5mg IV maybe repeated every 10 min. to maximum of 20mg.	Give slowly over 2 min. Side effects of respiratory depression.	***Seizure:*** Diazepam causes skeletal muscles to relax and is used to stop status-epileptic and/or titanic spasm. ***Pre-surgery:*** Reduces feeling of anxiety and helps clients to be calm and cooperate during pain/fear producing procedures.
Naloxone 1 cc. vial 5mg./cc.	Narcotic drug overdose	0.4 mg SC/IV and maybe repeated every 2 min. with maximum of 10 mg.	Reverses respiratory depression from narcotic medications.	***Opiate overdose:*** Naloxone reverses the effect of narcotics (pethidine, pentazocine, morphine, etc,) in the case of a narcotic overdose. Naloxone will reverse respiratory depression and thus is a life saving drug.
Promethazine 2 cc. vial 25 mg./cc.	Nausea and vomiting	25 mg. IM/IV/PO		***Nausea/vomiting:*** Promethazine is an anti-histamine that produces sedation and reduces nausea. Vomiting in a sedated patient has potential risk of

DRUG/PREPARATION	CONDITION	DOSE	PRECAUTIONS	EFFECTS
				aspiration. Promethazine is also used as an adjunct to prevent nausea from pre-surgical medications.
Furosemide 10 mg./amp. In 2 ml. amp	Used as diuretic in cases in cardio-pulmonary edema/congestion in emergency situation.	Initial dose of 40 mg. by slow IV. High doses of 80 mg. by continuous infusion; can be increased by 20 mg. increment every 1-2 hrs. until response	Should monitor fluid input and output and serum potassium	This is a well-tolerated drug with very rare occurrence of allergic reaction
Aminophylline	Bronchospasm with pulmonary edema during emergency situation	Loading dose 5-6 mg./kg. in 50-100 ml. diluent over 30 min.	Monitor cardiac/pulse rate, blood pressure	Bronchodilator with mild diuretic property and positive chronotropic and inotropic effect.
Sodium bicarbonate	Metabolic acidosis due to low oxygen saturation during shock or cardiac arrest.	Slow IV of 1 mEq./kg. repeated 0.5 mEq./kg. every 10 min.	Should have frequent laboratory monitoring of blood oxygen saturation	Works by mixing with lactic acid that forms during shock or cardiac arrest.

HOSPITAL BACKUP

If minilaparotomy is provided in a clinic with limited capability for handling emergencies (such as a mobile service facility) special planning is necessary. Mobile service teams must have all the supplies and equipment needed to handle the immediate surgical emergency. In addition, they should have formal relationships with established backup medical facilities in the area so that clients who need continued medical treatment during and after emergencies can receive reliable care. The local backup facilities must have the supplies, equipment, and trained staff required to handle complications following minilaparotomy.

Session 9

THE SURGICAL PROCEDURE

OVERVIEW

Programs must ensure the safety of women undergoing ML/LA. Surgeons must be trained and skilled in the techniques they are using, in the use of appropriate and safe anesthesia, in the proper use of a uterine elevator, in emergency abdominal surgery, and in other procedures for managing emergencies. The staff ensures safety by maintaining strict infection prevention practices.

This session provides the necessary information and skills, through practice with a Zoe pelvic model, on the steps of performing BTL by minilap.

LEARNING OBJECTIVES

At the end of the session, the participants will be able to:

1. Describe the two approaches to BTL by minilap.
2. Discuss the steps of the suprapubic approach to BTL by minilap.
3. Demonstrate the steps of minilap by the suprapubic approach, using a pelvic (Zoe) model.
4. Discuss the steps of the subumbilical approach to BTL by minilap.
5. Demonstrate the steps of minilap by the subumbilical approach, using a pelvic (Zoe) model.

REFERENCES

Cunningham F.G., MacDonald P.C., Leveno K.J., Grant N.F., Gilstrap L.C. The Puerperium. In Williams Obstetrics, 19 ed. Norwalk, CT: Appleton & Lange, 1993.

Minilaparotomy for Female Sterilization: An Illustrated Guide for Service Providers. EngenderHealth. 2003.

World Health Organization, Task Force on BTL, Special Program of Research, Development and Research Training on Human Reproduction. Mini-incision for postpartum sterilization of women: a multicenter, multinational prospective study. Contracept 1982; 26: 495-502.

NARRATIVE

Programs must ensure the safety of women undergoing MLLA. Surgeons must be trained and skilled in the techniques they are using, in the use of appropriate and safe anesthesia, in the proper use of a uterine elevator, in emergency abdominal surgery, and in other procedures for managing emergencies. The staff ensures safety by maintaining strict infection prevention practices. She also carefully screens and selects clients, and addresses any conditions that may increase the risks associated with the procedure. During counseling, staff presents minilaparotomy as a permanent method of contraception. Nevertheless, some clients request reversals after undergoing the procedure, so it is important for doctors to use occlusion techniques that are effective yet minimize damage to tubes.

The facility and its equipment affect the safety of the client. The facility must handle an adequate volume of procedures so that the doctors and other members of the surgical team can maintain their skills. However, program managers should discourage surgical personnel from doing an excessive number of procedures in a single session or operating at an excessive speed, because these practices may lead to an increase in complications and failure rates as a result of operator fatigue. The facility must be equipped with drugs to handle life-threatening situations and other emergencies. All instruments and equipment must be in optimum working condition before the start of the surgical procedure.

SUPRAPUBIC MINILAPAROTOMY

The suprapubic procedure is appropriate for clients at any time in their menstrual cycle. This procedure is also appropriate for most postabortion clients and for clients who are 42 or more days postpartum (i.e., once the uterus is fully involuted).

Evaluation of the Client

Although the pre-operative assessment has already been conducted, be sure to perform the following steps before surgery:

- Review the client's medical history and physical examination results from the medical record.
- Verify the client's informed decision and consent by asking if she still wants the procedure and why she wants it.
- Check the client's vital signs.
- Confirm by history and by reexamination the absence of pregnancy, infection, or any other conditions that could require delaying the procedure.

Client Preparation Before Entering the Operating Room

After the client has been evaluated and the decision has been made to proceed with surgery, prepare the client before she enters the operating room, as follows:

- *Verify that the client understands the most important steps of the procedure* (e.g., what local anesthesia means, what she might feel at various times, and that her cooperation may be needed at various parts of the surgery to make the procedure easier)
- *Ask the client to empty her bladder.* A full bladder increases the risk of injury during abdominal entry. Therefore, immediately before the procedure, the client's bladder must be emptied by

asking her to urinate immediately before entering the operating room. Routine use of the catheter is discouraged as this increases the risk for infection. Use of the catheter is limited only to instances when the bladder is noted to be distended intraoperatively.

- *Provide a surgical gown for the client and usher her to a private place to change.*

Position the Client

Escort the client into the operating room and help her onto the surgical table. Positioning the client for a suprapubic procedure should involve considerations of both client comfort and ease of access to the fallopian tubes is facilitated through the use of the uterine elevator, the most common position used is the dorsal supine position.

The dorsal supine position

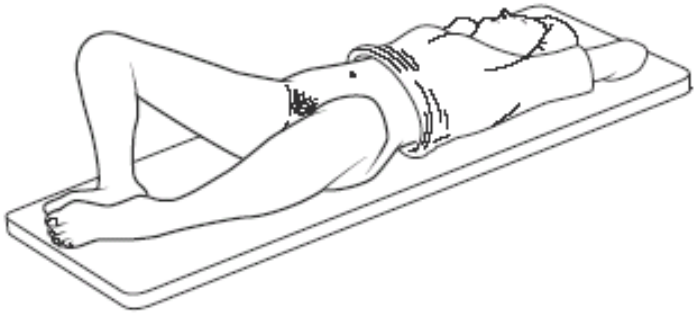

Inserting the Uterine Elevator

The uterine elevator helps the surgeon manipulate the uterus and gain easier access to the fallopian tubes by bringing the uterine corneal portion of the tubes to the incision site so that each tube can be directly visualized and grasped. Use of the uterine elevator also permits the incision to be small.

The surgeon inserts the uterine elevator. If a pelvic examination has not been done by the surgeon, this should be done before insertion of the uterine elevator. Knowing the size, shape, and direction of the uterus will help decrease the chances of uterine perforation or of difficulty in manipulating the uterine elevator. The uterine elevator is inserted before cleaning the abdomen.

The most widely used technique for inserting the uterine elevator is as follows:

- Position the client comfortably on the surgical table in the dorsal supine position.
- Insert the Graves vaginal speculum into the vagina to expose the cervix.
- Use both screws to open the two blades of the speculum, this ensures optimal visualization of the cervix and helps prevent the vaginal walls from coming into contact with the intrauterine portion of the uterine elevator.
- Using a sterile forceps to hold an antiseptic-soaked cotton ball or gauze sponge, generously swab the cervix and vagina with antiseptic solution.
- Without touching the vaginal walls, pass the uterine elevator through the vagina and into the cervix, up to the cervical guard. Be sure to maintain the sterility of the intrauterine portion of the uterine elevator.

- Remove the speculum, taking care to keep the uterine elevator in place with one hand so that it does not slip out.
- Place a sterile drape on top of the handle of the uterine elevator so it can be manipulated during abdominal surgery without becoming contaminated.

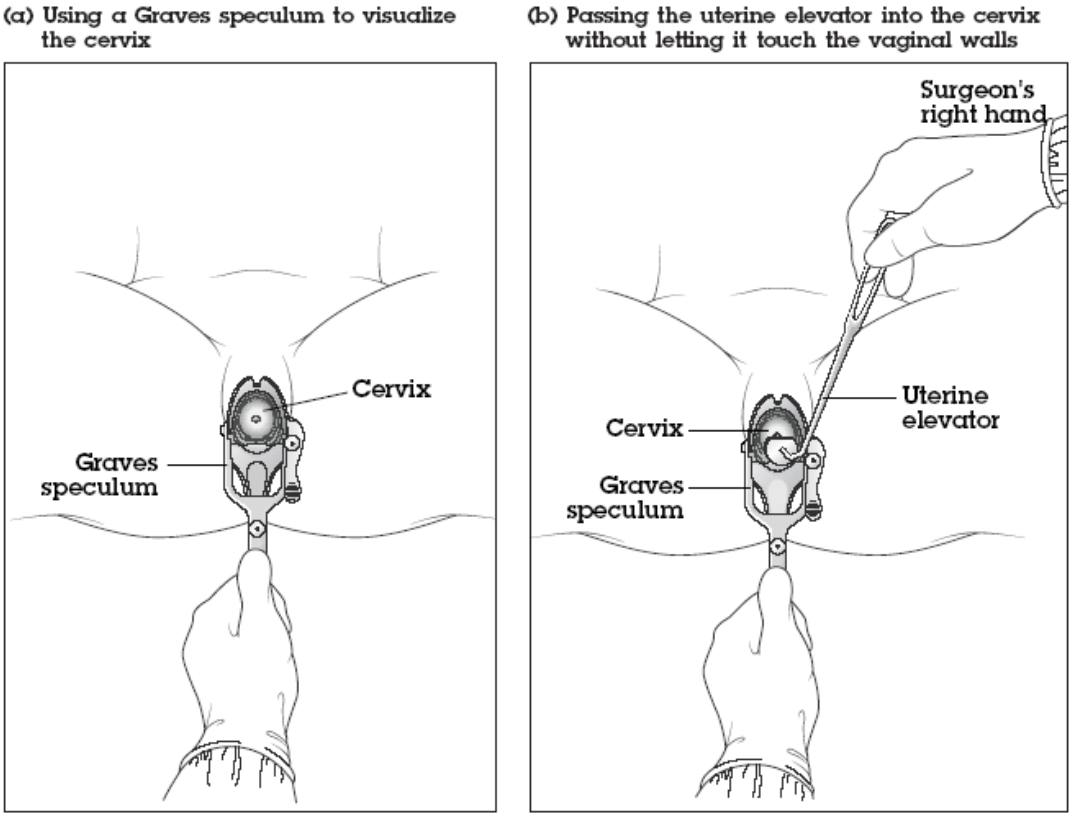

Preparing the Abdominal Area

Use an appropriate antiseptic solution to saturate a sterile swab on a sterile sponge forceps.

Using the soaked swab on a sponge forceps, wipe the skin, first with strokes at the site of the planned incision line and then with circular motions around the incision line, moving progressively out to the periphery. Make progressively larger concentric circles from the planned incision line outward, but do not bring the used swab back over a cleaned area.

Upon reaching the periphery of the prepared skin, discard the swab in a waste receptacle. Swabbing should be repeated at least twice. For suprapubic procedures, skin preparation should include the upper part of the pubis and thighs.

Preparing the client's abdominal area before a suprapubic minilaparotomy

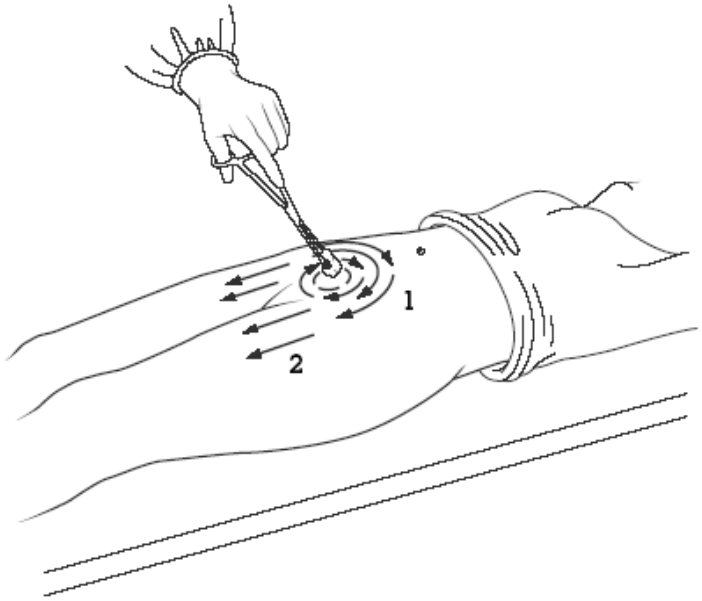

After allowing the antiseptic to dry, create a sterile field by placing sterile drape sheets around the immediate operative site. If four drapes are used, place the drapes above to the head of the client, below to the legs of the client, and on both sides of the operative area, and secure then in place with towel clips. Once the drapes are in place, when placed at right angles they will form a sterile window.

At this point, the client monitor administers by slow IV the sedative and pain medication (e.g., diazepam and meperidine) according to the regimen selected.

Selecting the Incision Site

Before beginning infiltration, the surgeon must select the appropriate incision site. This will ensure that the abdomen is opened in the most optimal area anatomically, one that will facilitate access to the fallopian tubes.

The best area for a suprapubic incision is 2 to 3 cm. above the border of the pubis. In this area, an anatomical fold at the union of the pubis and the abdominal wall is generally thinner, which facilitates opening of the abdomen.

The suprapubic minilaparotomy incision site

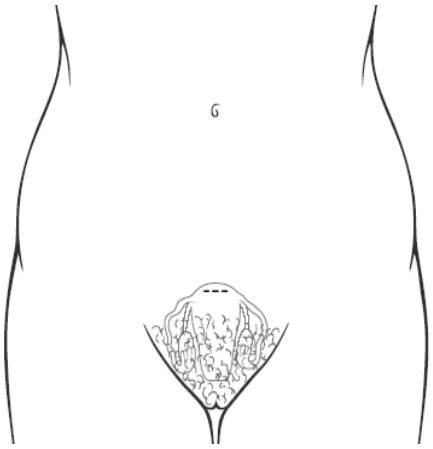

Infiltration of Anesthesia: Fan-Shaped Technique

The nurse monitor cleans the vial top with 60-70% isopropyl alcohol and serves the surgeon or nurse assistant by holding the vial as either one draws up 10 cc. of 2% or 20 cc. of 1% lidocaine without epinephrine. The recommended needle gauge is 21 and the needle length is 1.5 in. so the anesthesia can be administered throughout the length of the incision and deep into the abdominal layers in one attempt.

Tell the client that her skin will now be anesthetized to reduce pain. Tell her that she may feel the initial sharp pain "prick" of the needle and a burning sensation while the anesthesia is injected.

At one end of the planned incision site, introduce the needle through the skin, inserting the entire needle into the intradermal tissue and horizontally beneath the skin along the complete length of the planned incision site.

Field block using fan-shape technique

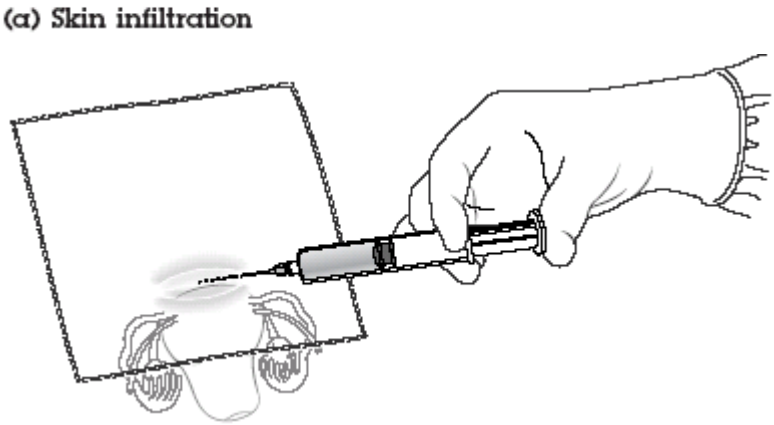

Once the needle is completely introduced, and before the anesthetic is injected, gently aspirate it to ensure that the needle has not entered a blood vessel.

Inject lidocaine along the planned incision line while slowly withdrawing the needle until the tip is at the site of entry.

Repeat the infiltration at 30°, 60°, and 90° angles relative to the skin, thus creating a fan shape. This will ensure that all abdominal wall layers are anesthetized down to the peritoneal layer. The needle should be withdrawn slowly while 2 to 3 cc. lidocaine is injected in each layer. Use no more than 20 cc. of 1% lidocaine or 10 cc. 2% lidocaine.

(b) Infiltration of the different layers

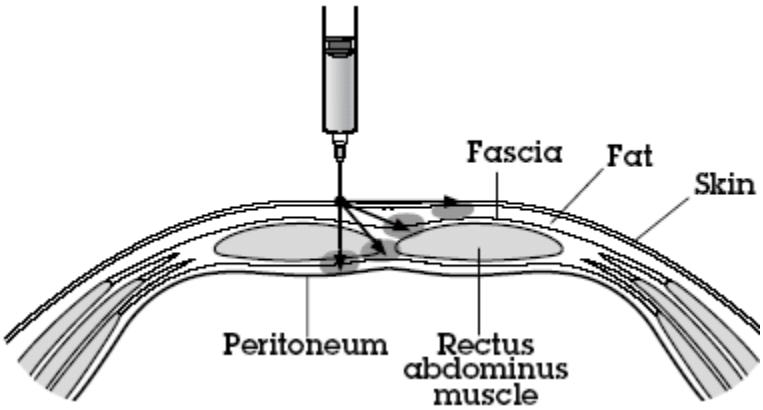

Gently massage anesthetized area to evenly distribute lidocaine. Allow 2-3 minutes for lidocaine to take effect before making the incision. Reserve the remaining lidocaine for anesthetizing individual layers if necessary.

Entering the Abdomen

To open and enter the abdomen, the surgeon and the surgical assistant work together.

The main responsibilities of the surgeon are to:

- Incise and dissect the abdominal wall layers
- Access and identify the tubes
- Provide direction to the assistant on how to help

The main responsibilities of the surgical assistant are to:

- Expose the abdominal layers
- Hold the retractors parallel to the client's abdomen once all layers are opened
- Move the retractors, as needed, to maintain the incision opening
- Actively follow the surgery and help, as needed

Before incising, check for effective anesthesia block in the selected incision site by pinching the skin with a dissecting forceps.

Pull the skin taut to make an incision approximately 2 to 3 cm. long, centered, above the pubic

symphysis. Using a scalpel blade, open an incision only through the epidermis 2 to 3 cm. in length (to a maximum of 5 cm.). The subcutaneous tissue should not be included in the opening of the incision, as it should be dissected bluntly later.

Entering the abdomen: Opening the skin

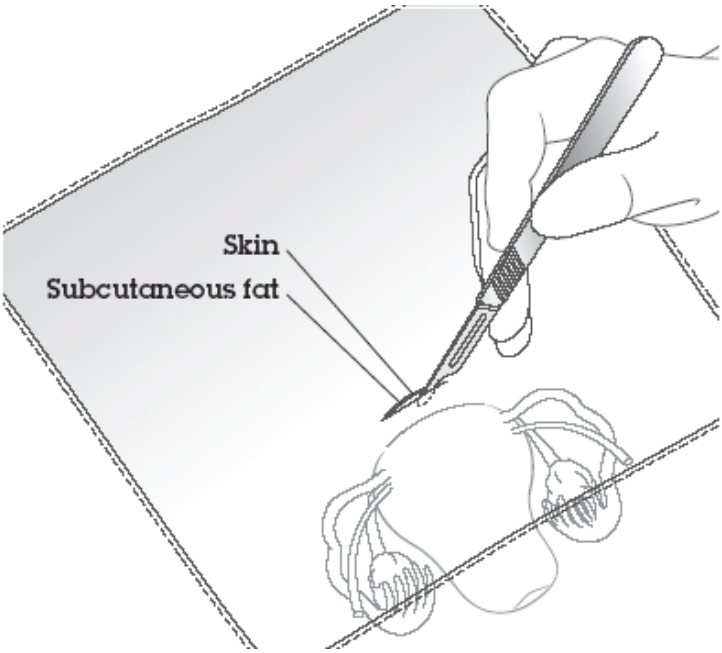

Using a Kelly forceps or the blade of the abdominal retractor (e.g., Richardson-Eastman or Apelo retractors), always working in the midline, bluntly dissect the subcutaneous fat. Do this gently and precisely to minimize tissue trauma and bleeding. Control any bleeding, as needed. Dissect subcutaneous tissue until the anterior rectus fascia is visualized and exposed.

Incise the fascia vertically, using a scalpel at the center of the incision, incise the full thickness of the fascia until the rectus muscle can be seen on both sides of the midline. With the Allis or Kelly forceps, grasp the fascia in the midline of the incision. Free the underlying muscles from the fascia by bluntly dissecting it or by using Mayo scissors.

Entering the abdomen: Grasping the fascia

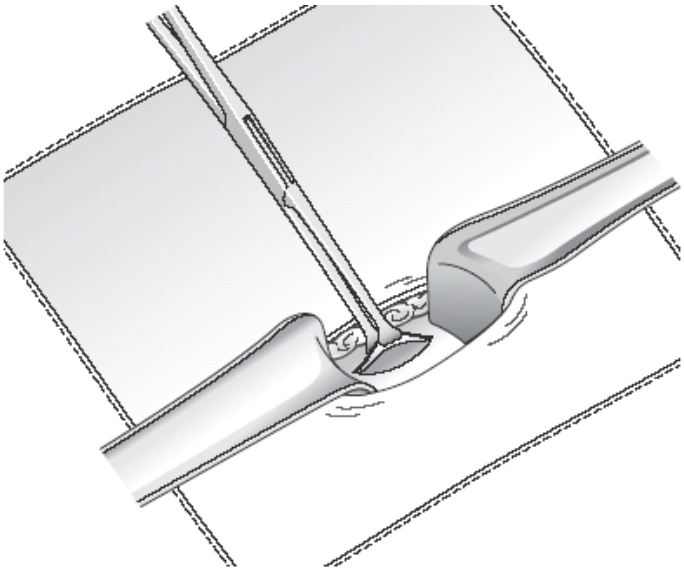

Note: While two forceps are needed here, only one is shown in the figure for clarity

Entering the abdomen: Dissecting the fascia

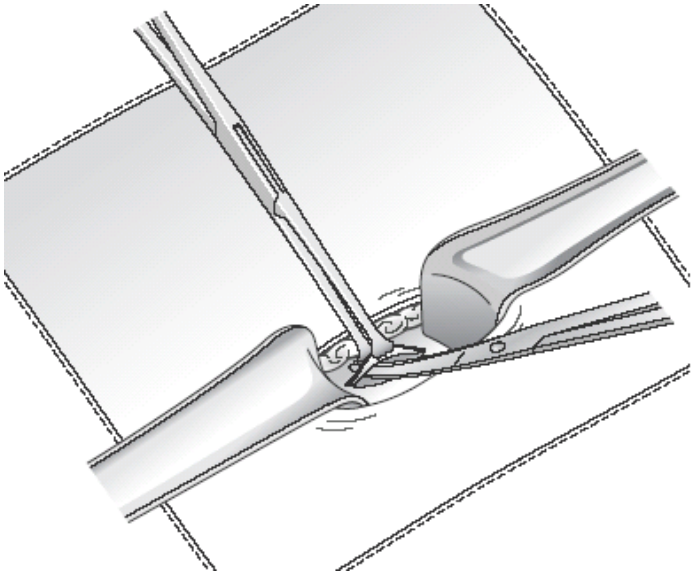

Extend the fascial opening vertically on both sides so that it is slightly larger than or about the same length as the skin incision. Have the surgical assistant place the retractors under the fascia and adjust them to expose the linea alba (the midline raphe of the rectus muscle). Retractors should be pulled horizontally to keep the incision open. At this time, one of the forceps can be removed.

Entering the abdomen: Visualizing the muscle layers

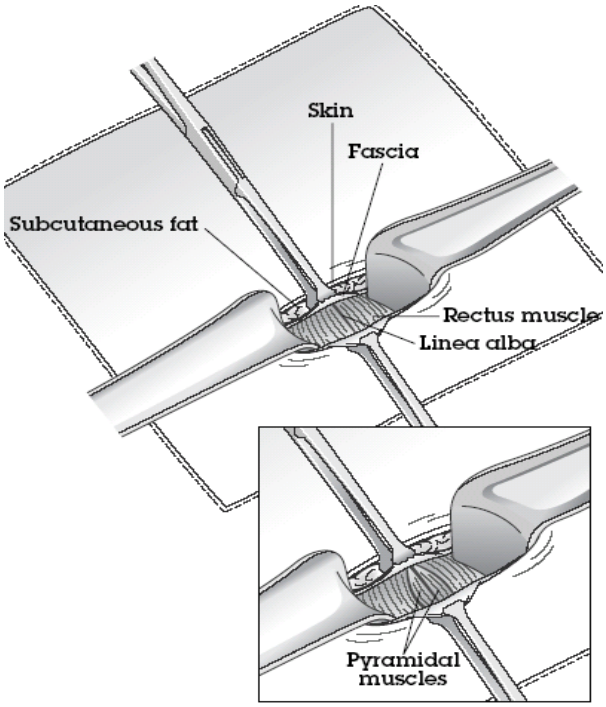

Entering the abdomen: Opening the rectus muscle

(a) Separating the rectus muscles

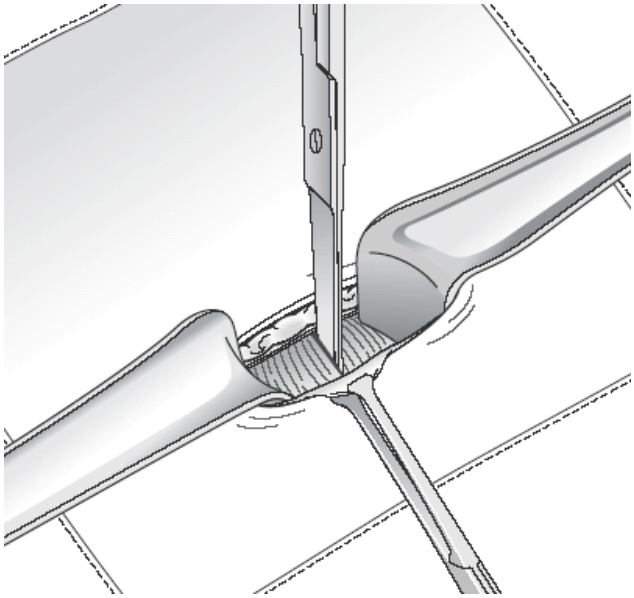

(b) Opening the scissors to separate the muscles

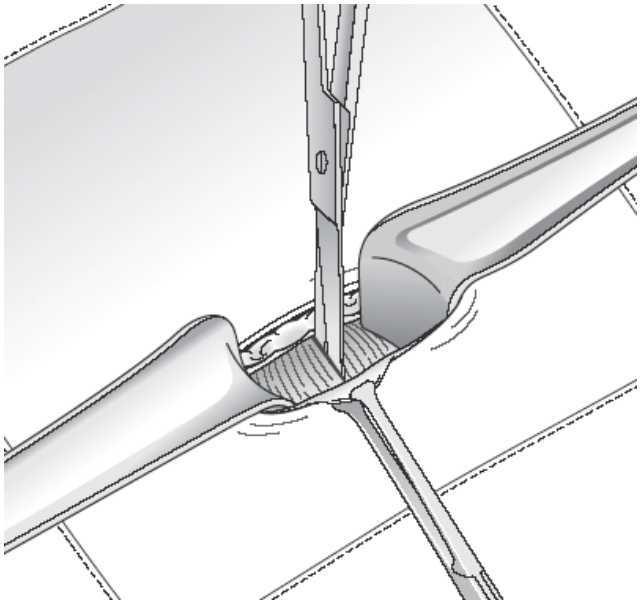

Bluntly separate the rectus muscles vertically at the linea alba, entering through the linea alba with a closed scissors or a hemostat. Once through the linea alba, open the scissors to enlarge the opening. After the rectus muscles are separated, have the surgical assistant reposition the retractors further into the incision, to separate the rectus muscle even more and expose the preperitoneal fat.

Entering the abdomen: Opening the rectus muscle

(c) Repositioning the retractors to expose the preperitoneal fat

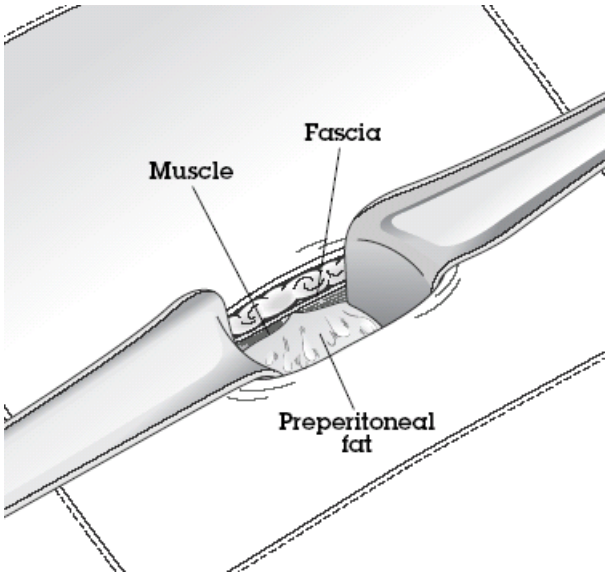

Entry into the abdominal cavity is safer when the operating table is placed in the Trendelenburg position (with the head of the table tilted downward). This position shifts the bowels out of the operative site, thus minimizing the risk for injury of the bowels. The Trendelenburg position should be less than 20° or less, to avoid reducing the client's lung volume and compromising her respiratory ability. To minimize the length of time the client stays in this position, the tilt is done just before incising the peritoneum and

should return her to the horizontal position as soon after occlusion of the tubes.

Entering the abdomen: Grasping the peritoneum

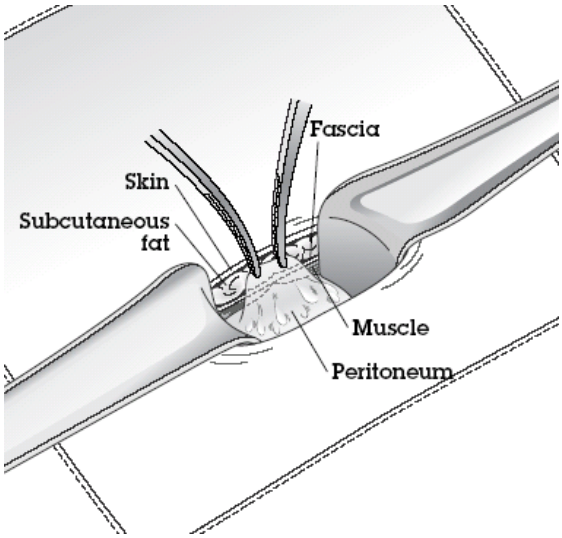

Using the blades of the retractors, bluntly dissect the preperitoneal fat as needed to expose the peritoneum.

To incise the peritoneum, elevate the peritoneum by grasping it at two points with hemostats. To prevent injury to the underlying structures, avoid using toothed instruments. Once the peritoneum has been elevated, to protect underlying viscera and structures from injury, check that the bowels, bladder, or omentum have not been grasped inadvertently. This should be done once the peritoneum has been elevated. This is done by using the edge of the scalpel holder to check for translucency and that the peritoneum has been thinly grasped between the two forceps. Once this has been ascertained, make a small opening in the peritoneum with scalpel.

Once the peritoneum is open and entry into the abdominal cavity is confirmed, the surgical assistant should gently reposition the retractors inside the abdomen to maximally expose pelvic structures. Secure peritoneal edges at one point with forceps then reposition retractors, and assess underlying tissue for possible injury. From this point until the completion of tubal occlusion, the surgical assistant must keep the incision open with retractors and must adjust the retractors according to the surgeon's needs.

Accessing and Delivering the Fallopian Tubes

Accessing and delivering the fallopian tubes requires manipulation of the uterus and the fallopian tubes. The uterine elevator is the key instrument for moving the uterus and consequently for positioning the fallopian tubes near the incision area, which allows the surgeon to access them. The process of manipulating the uterine elevator with one hand and accessing and delivering the tubes with the other requires coordination.

If the table has not been in Trendelenburgh position yet, the client monitor should do so now.

Elevate the uterus by depressing the uterine elevator as shown in the figure below with one hand. This will bring the uterine fundus upward toward the incision site. When the uterus is elevated, the retractor blade bumps on the fundus. Clear the uterus of omentum and bowels which may be obscuring its visualization.

Elevating the uterus

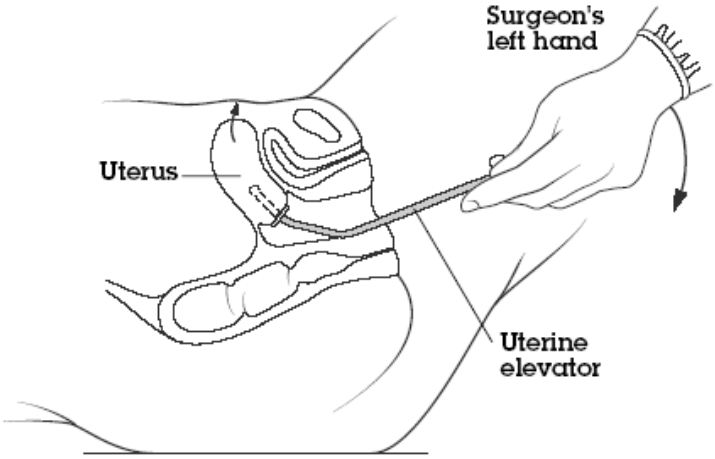

Viewing the fundus through the incision

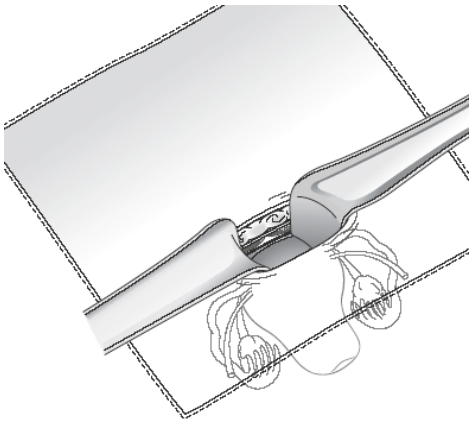

While directly viewing the uterine fundus and keeping the uterine elevator depressed, gently rotate its handle in the opposite direction of the tube being accessed, to position the tube at the incision site. There may be instances when the retractor, as held by the assistant, will have to be gently pulled toward the side of the tube being accessed. As a result of this maneuver, the tube should become visible and can then be grasped.

Accessing the tubes: Rotating the uterus to position the right tube at the incision site

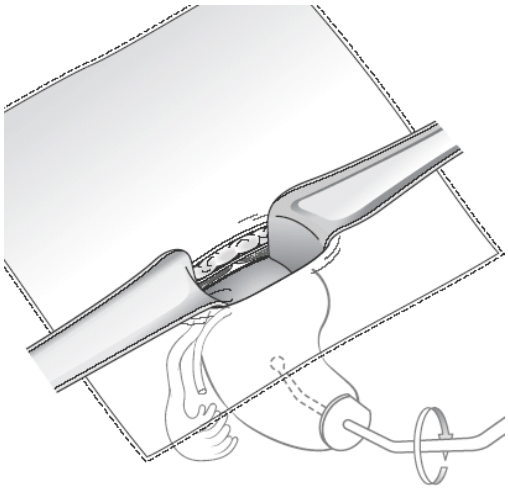

When the tube is visualized, grasp the tube atraumatically with baby Babcock or Kelly forceps with the free hand. Keep the uterine elevator in place with the other hand.

Grasping the tube

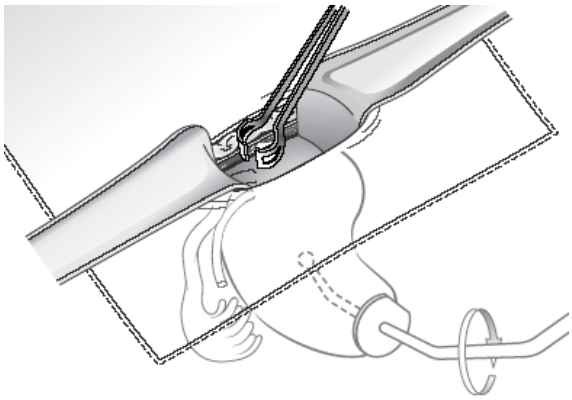

Release the uterine elevator, while holding the tube with forceps. Confirm the identity of the tube by gently pulling it out further and following it to the fimbriated end. It is important to identify the fimbriated end to be certain that the structure held is the tube. This is to avoid the accident that other structures like the round ligament and part of the bowel is ligated which can cause failure and catastrophic complications.

Confirming the identity of the tube

a) Holding the tube while releasing the uterine elevator

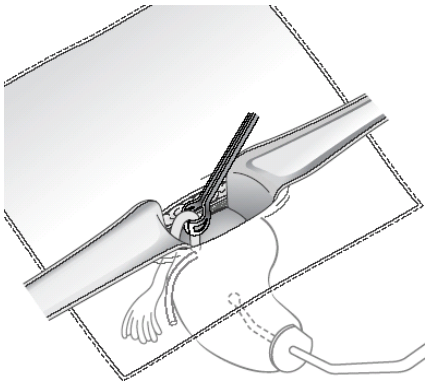

b) Pulling the tube further out of the incision

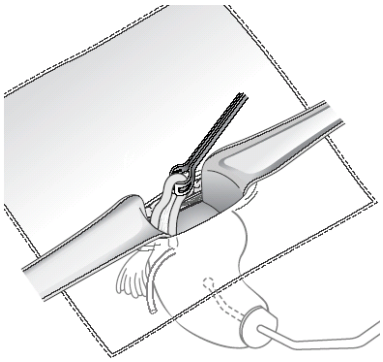

c) Visualizing the fimbrial end of the tube

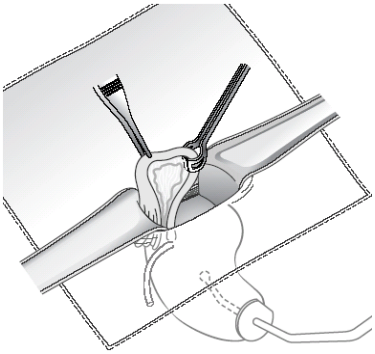

Occluding the Fallopian Tubes: Pomeroy Technique

At this point, the tube can be ligated.

a) Holding the tubal loop

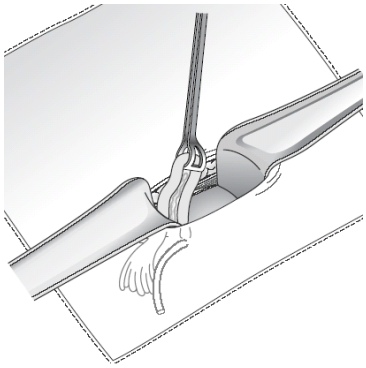

Place the forceps at the midsection of the tube, in an avascular area, which is about 2-3 cm. from the cornual portion of the tube. Keeping the forceps in a vertical position, hold the loop of tube.

b) Tying the loop of tube

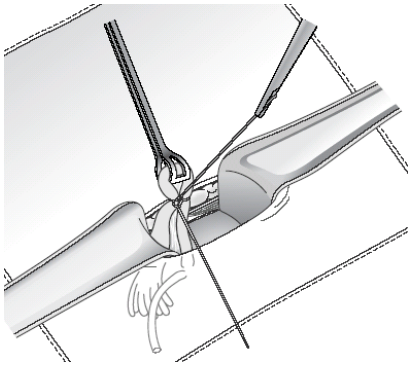

Tie the loop of tube (approximately 2 cm. of tube) with a rapidly absorbable suture like chromic 2-0.

c) Cutting the tube above the knot

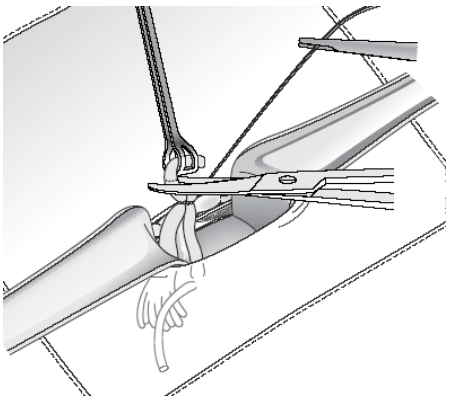

Cut off 1 cm. of the loop of fallopian tube above the knot using Metzenbaum scissors, leaving at least a 0.5 cm. tubal stump above the knot.

d) Checking the stump for bleeding

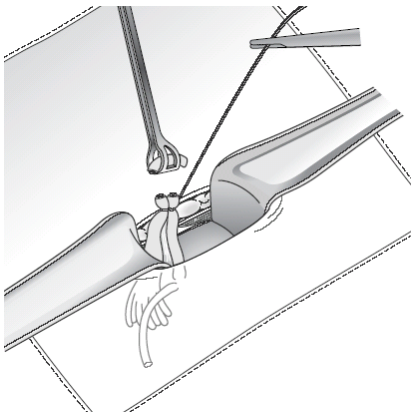

Examine the stump for bleeding.

The steps for visualization of the tube up to this point are repeated for the opposite fallopian tube.

Closing the Abdomen

While grasping both ends of the fascia with forceps and starting at one end of the incision, close the fascia by continuous, interlock sutures with absorbable sutures. Two or three stitches may be needed depending on the length of the incision and the extent of superficial bleeding. Observe for bleeding.

Closing the fascia

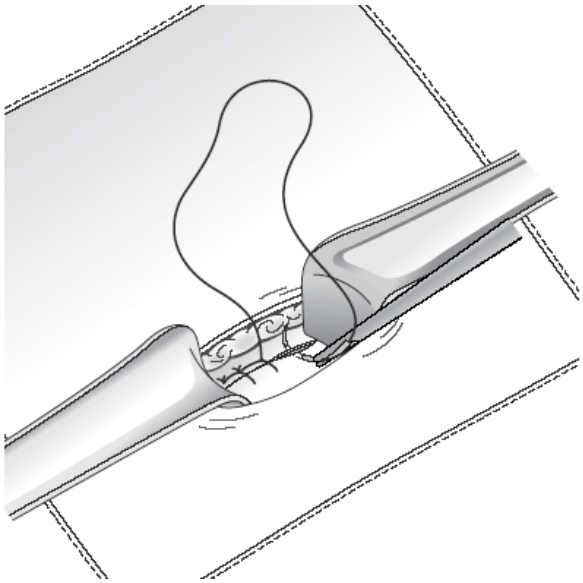

The skin may be closed by interrupted or subcuticular continuous stitches using absorbable suture.

Closing the skin

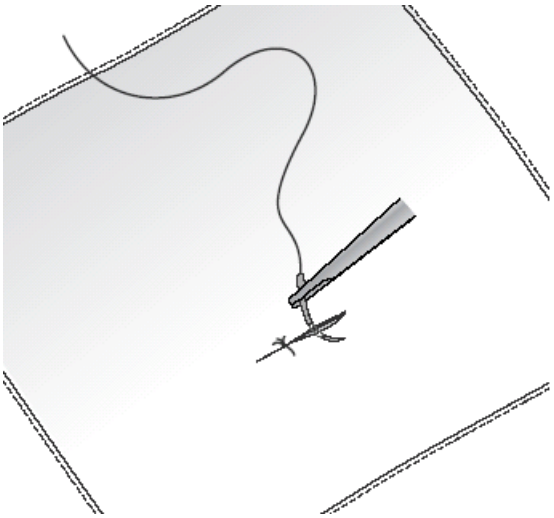

Finally, dress the closed incision by swabbing the incision with antiseptic then cover with sterile gauze and plaster.

Dressing the wound

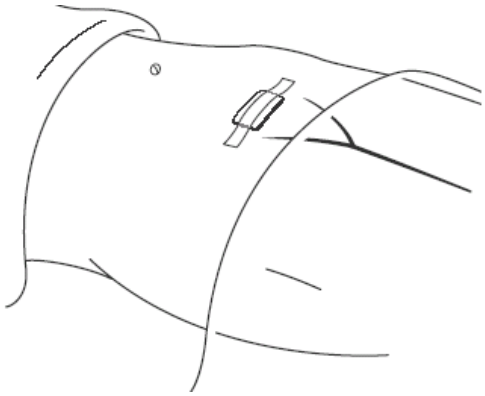

Remove the uterine elevator by gently pulling it out from the vagina.

Place all used instruments in decontaminating solution. Immerse gloved hands in the decontaminating solution then remove them inside out. Put removed gloved in the decontaminating solution.

SUBUMBILICAL MINILAPAROTOMY

Subumbilical minilaparotomy is used for postpartum clients when the uterus is enlarged and easily accessible through a subumbilical approach.

Evaluation of the Client

Ideally, a postpartum client requesting BTL should have been counseled and assessed before arriving at the facility for delivery. Even so, additional counseling and an assessment of her continuing interest in and suitability for sterilization should again be performed before the client is brought to the operating room for the procedure.

An important step is to determine the condition of the infant. In some cases, if the infant's health is unstable, the client may want to postpone sterilization, since her desire for permanent contraception may change if the infant dies or suffers from some health problem.

Client Preparation Just Before Entering the Operating Room

After the client has been evaluated, the informed consent has been verified, and the decision to proceed with surgery has been made, prepare the client before she enters the operating room, as follows:

- Verify that the client understands the most important steps of the procedure (e.g., what local anesthesia means, what she might feel at various times during the procedure, and that she may be asked to "assist" during the procedure by taking a deep breath).
- Provide a surgical gown for the client and give her a private area in which to change. A client's modesty should be preserved.
- Ask the client to urinate.

Positioning the Client

Usher the client to the operating room and help unto the operating table. Position the client in the dorsal supine position. The height of the uterine postpartum fundus should be assessed to confirm that it is close to the umbilicus.

Positioning the client for subumbilical minilaparotomy:
Assessing the height of the uterine fundus

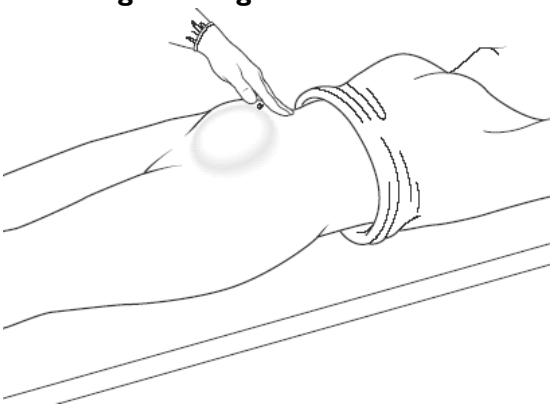

Abdominal Preparation

Using an antiseptic-soaked swab on a sponge forceps, clean the umbilicus and throw away the swab. Take a second swab, and starting from the subumbilical area, move progressively out from the umbilicus in circular motion.

Preparing the client's abdominal area before a subumbilical minilaparotomy

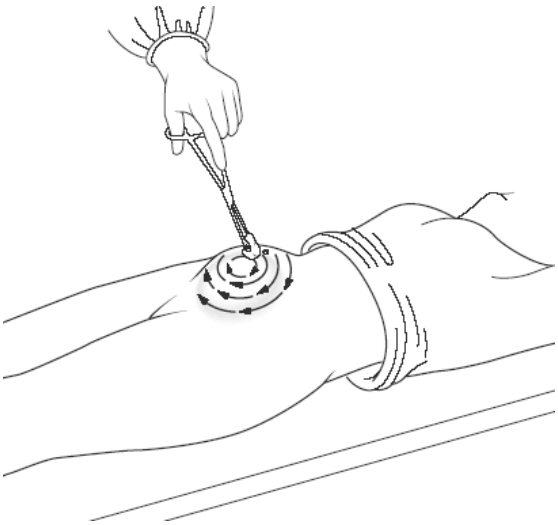

Swab at least a 12-cm. circumference progressively in this manner; do not bring the used swab back over the cleaned area.

After allowing the antiseptic to dry, create a sterile field by placing sterile drape sheets around the immediate operative site.

At this moment, the client monitor should administer additional pain medication (e.g., diazepam and meperidine) according to guidelines.

Selecting the Incision Site

The best area for a subumbilical incision is just beneath the umbilicus, as during the immediate postpartum period the umbilicus is not deep and lies just on top of the enlarged postpartum uterine

fundus. Additionally, the abdominal wall in this area is thin and flexible.

Infiltration of Anesthesia

Because the abdominal wall at the umbilicus is thin, elevation of the skin and tissues to avoid underlying structures is important. Use tissue forceps to elevate the distal ends of the incision. Infiltrate the skin and fascia with 5-6 ml lidocaine. Gently massage the area to spread the lidocaine. Wait for 2-3 minutes to become effective, test by pinching with toothed tissue forceps prior to making the incision on the skin.

Entering the Abdomen

To open and enter the abdomen, the surgeon and the surgical assistant work together with each one having specific responsibilities.

Before incising, check for effective anesthesia block in the selected incision site by pinching the skin with a dissecting forceps.

Make an incision approximately 1.5 to 3 cm. long. Keep skin elevated and on tension with tissue forceps while making the incision. Dissect underlying tissues bluntly and apply retractors until the fascia is visualized.

The subumbilical minilaparotomy: Incision site

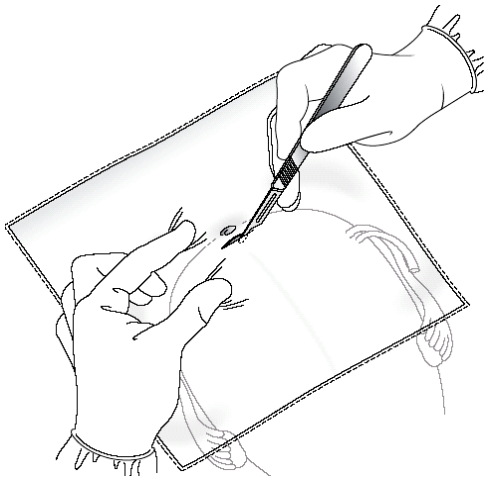

Identify and elevate fascia with Kelly or mosquito forceps. Make a small incision on the fascia then enlarge transversely.

Entering the abdomen: Visualizing the fascia

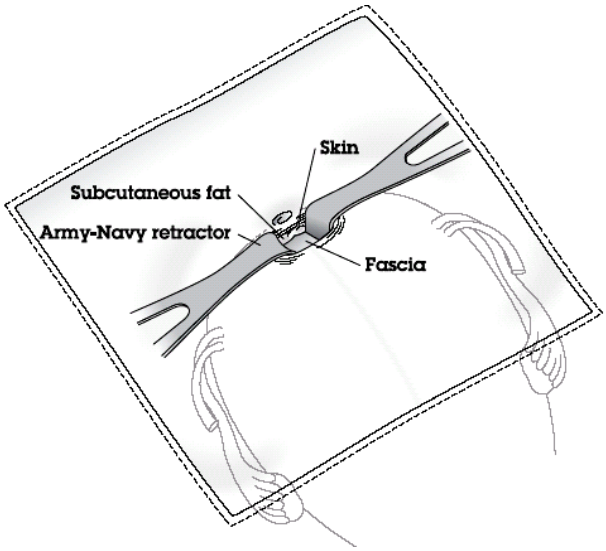

Entering the abdomen: Opening the fascia

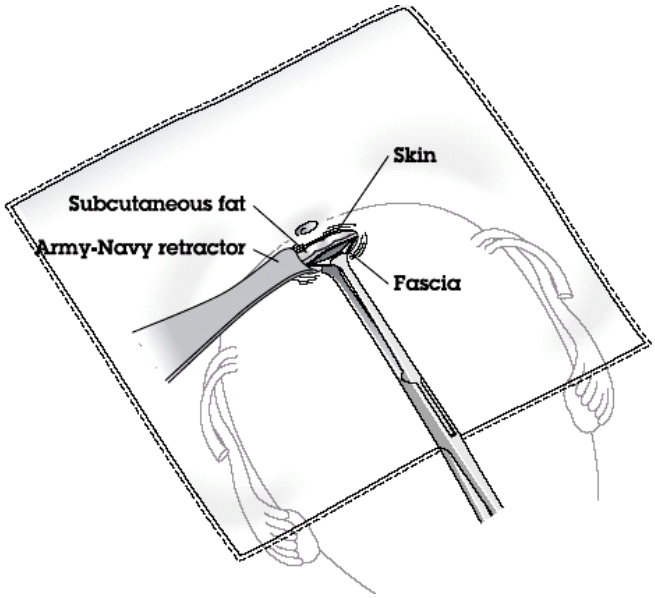

If the abdominal cavity has not yet been entered, bluntly strip away any preperitoneal fat and elevate peritoneum with hemostatic forceps. To prevent injury to underlying tissues, check that the bowel, bladder, or omentum has not been grasped inadvertently together with the peritoneum. Before incising the peritoneum, look at the fold of peritoneal tissue that it is translucent and thin.

Entering the abdomen: Opening the peritoneum

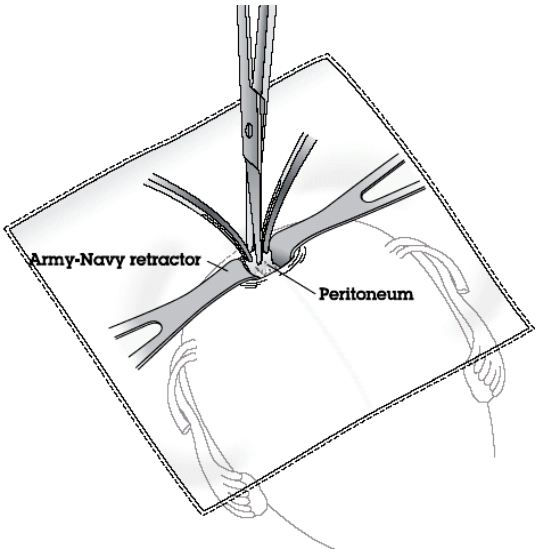

Once entry into the abdominal cavity is confirmed, the surgical assistant gently places the blades of the retractors inside the abdomen to maximally expose the uterus and tubes. From this point on until the tubes are occluded, the surgical assistant must keep the incision open with retractors and must adjust the retractors according to the surgeon's needs.

Accessing and Delivering the Fallopian Tubes

One of the advantages of subumbilical access to the fallopian tubes is that the skin is pliable; this allows the assistant to move the incision to the sides so the tubes can be accessed in the area in which they are located anatomically. Also, the uterus can be manipulated from the outside, allowing the cornua to be moved to the incision and thus making access to the tubes easy.

If the uterus is covered by bowel and/or omentum so that its visualization is obscured, ask the client to take a deep breath while pushing the bowels gently out of the way using the retractors.

Using the retractors to expose the uterus and tubes

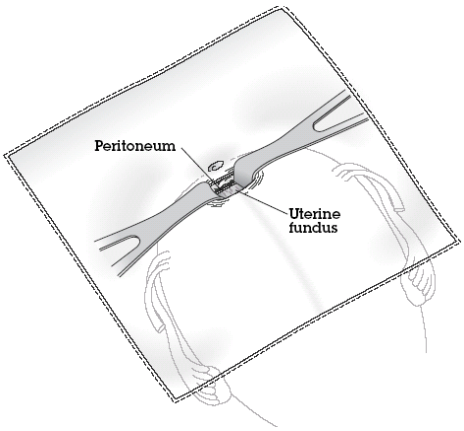

Using manual, external pressure on the abdomen, gently push the uterus toward the opposite side of the tube being accessed while the surgical assistant moves the retractors to bring the incision to the corneal area. This will allow visualization of the tube and grasping it.

Accessing the tubes

(a) Pushing the uterus toward the opposite side of the tube being accessed

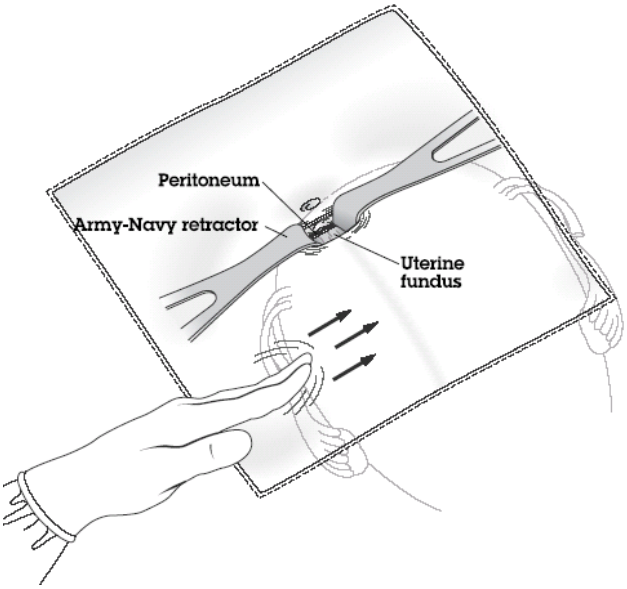

(b) Moving the incision to be above the tube being accessed

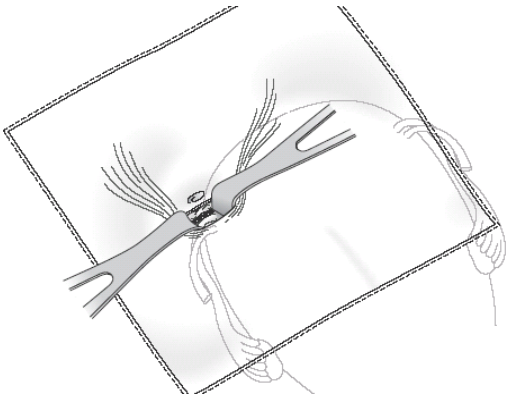

Once the tube has been visualized, grasp it atraumatically with either straight Kelly forceps or baby Babcock forceps. Confirm the identity of the tube by "walking through it" with the forceps to its fimbriated end. At this point, the tube can be ligated.

Grasping and identifying the tube

(a) Grasping the tube

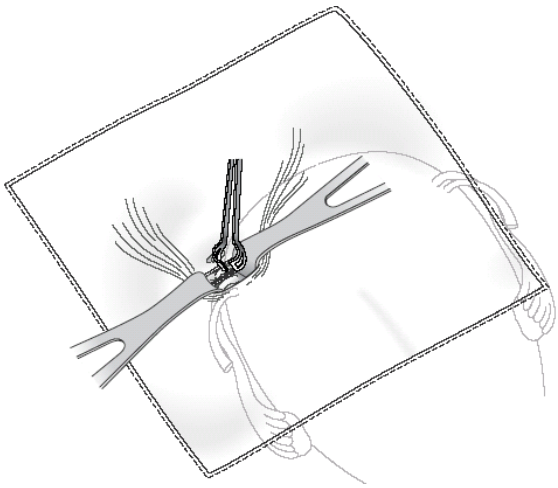

(b) Moving the tube to the opening

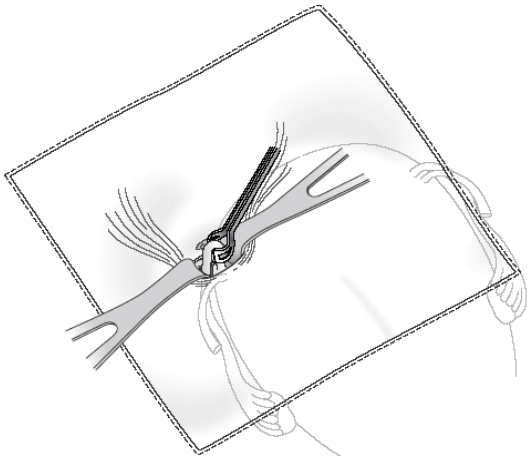

(c) Pulling the tube out and visualizing the fimbria

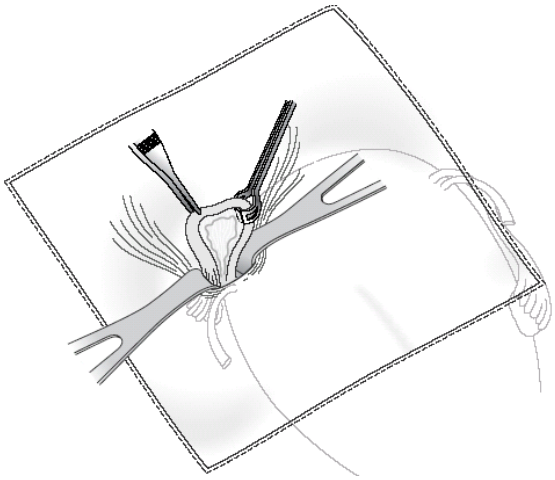

Occluding the Fallopian Tubes: Pomeroy Technique

Place the forceps at the midsection of the tube, in an avascular area, which is about 2-3 cm. from the corneal portion of the tube. Keeping the forceps in a vertical position, hold the loop of tube.

Holding the tubal loop

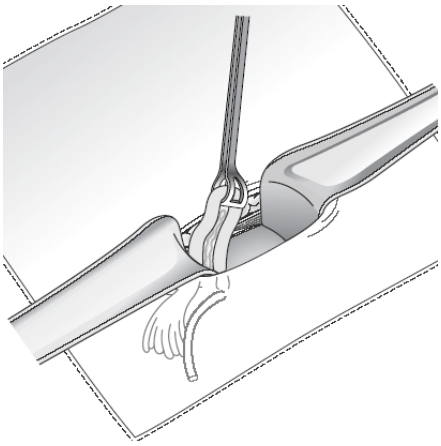

Tying the loop of tube

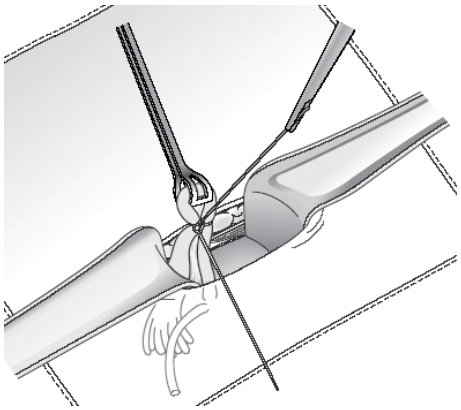

Tie the loop of tube (approximately 2 cm. of tube) with a rapidly absorbable suture like chromic 2-0.

Cutting the tube above the knot

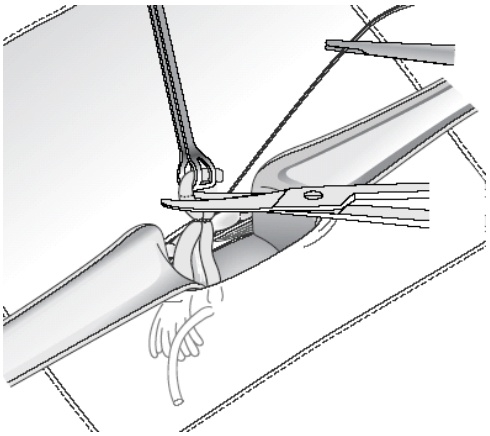

Cut off 1 cm. of the loop of fallopian tube above the knot using Metzenbaum scissors, leaving at least a 0.5 cm. tubal stump above the knot.

Checking the stump for bleeding

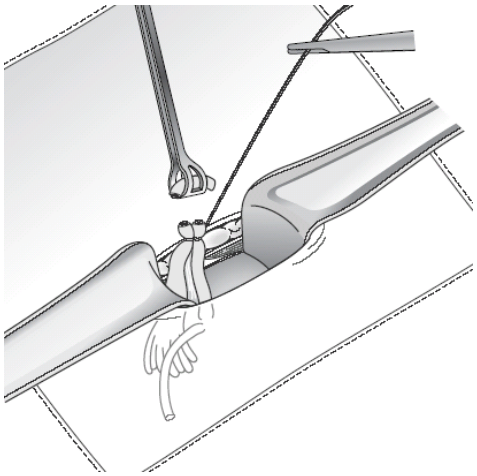

Examine the stump for bleeding.

The steps for visualization of the tube up to this point are repeated for the opposite fallopian tube.

Close the abdomen and perform succeeding tasks as described for suprapubic minilaparotomy.

Source: Minilaparotomy for BTL: An Illustration Guide for Service Providers. EngenderHealth (New York: 2003)

HOSPITAL STAY

Clients having an interval procedure should be able to go home the same day. The postpartum procedure and its recovery period do not in themselves add to the usual hospital stay required for a woman who delivers a baby. Sometimes, however, the surgical schedule at the facility may make it necessary for the woman to stay longer.

PERFORMANCE CHECKLIST ON MINILAPAROTOMY UNDER LOCAL ANESTHESIA

Place a **(√)**in case box if step/task is performed **satisfactorily**, an **(X)** if it is **not** performed **satisfactorily**, or **N/O** if not observed.

Satisfactory: Performs the step or task according to standard procedure or guidelines

Unsatisfactory: Does not perform the step or task according to standard procedure or guidelines

Not Observed: Step or task not performed by participant during evaluation by trainer

PARTICIPANT_____ **Course Dates**_____

SUPRAPUBIC MINILAPAROTOMY					
TASK/ACTIVITY	**CASES**				
PRE-OPERATIVE					
1. Verifies client's identity.					
2. Reviews client history and physical examination to assure proper client selection.					
3. Checks informed decision making and informed consent obtained verifies voluntarism.					
4. Ensures that client has emptied her bladder before entering the operating room.					
5. Ensures that needed instruments are available and properly processed.					
6. Ensures that needed medications/drugs for the procedure and for possible emergency are available.					
7. Ensures that intravenous line is properly inserted by the circulating nurse.					
8. Positions client in dorsal lithotomy position.					
9. Washes hands with soap and water.					
10. Puts on HLD or sterile gloves.					
11. Swabs the perineal area with povidone solution assisted by the circulating nurse.					
12. Performs a gentle bimanual examination to assess uterine size, position and mobility, and the presence of any pelvic pathology.					

SUPRAPUBIC MINILAPAROTOMY					
TASK/ACTIVITY	**CASES**				
13. Inserts the vaginal speculum.					
14. Checks for abnormalities of the cervix (e.g., erosions, mass, discharge).					
15. Swabs the cervix with povidone.					
16. Gently inserts the uterine elevator into the uterus without touching the vaginal walls.					
17. Repositions client into dorsal supine position with knees bent.					
18. Instructs circulating nurse to administer Meperidine 50 mg. by slow IV and Diazepam 5 mg. initially and add 5 mg. if client is observed to be anxious.					
19. Performs surgical scrub and puts on surgical garments and sterile gloves.					
20. Checks that the abdomen has been appropriately prepared.					
21. Creates a sterile field by draping the client.					
INFILTRATION OF LOCAL ANESTHESIA					
22. Checks that the uterine elevator is in place by depressing it and noting the bulge created on the abdomen by the uterine fundus.					
23. Chooses the incision site as two fingerbreadths (2-3 cm.) from the anterior border of the symphysis pubis.					
24. Infiltrates the abdominal wall (using the fan-shaped technique) with 10 cc. 2%lidocaine or 20 cc. 1%lidocaine.					
25. Checks for effective anesthesia block by pinching with tissue forceps the intended incision site.					
ENTERING THE ABDOMEN					
26. Pulls the skin taut to make a transverse incision approximately 2-3 cm. in length.					
27. Dissects the subcutaneous layer bluntly with Kelly forceps or retractors until the anterior rectus fascia is visualized and exposed. Maintains midline dissection.					
28. Instructs the assistant to retract so that the fascia is exposed and visualized.					
29. Incises the fascia creating a vertical slit through the whole thickness of the fascia.					
30. Grasps the edges of the slit with Kelly or Allis forceps.					
31. Instructs the assistant to hold the Kelly forcep on his/her side and gently lifting this upward.					
32. Dissects the muscles beneath the fascia using Mayo scissors.					
33. Extends the fascial incision vertically.					
34. Bluntly separates the rectus muscle vertically at the midline (linea					

SUPRAPUBIC MINILAPAROTOMY					
TASK/ACTIVITY	**CASES**				
alba)					
35. Removes the Kelly forceps holding the fascial.					
36. Repositions the retractors into the incision to expose the preperitoneal fat.					
37. If there is too much preperitoneal fat, does blunt dissection to expose the peritoneum.					
38. Instructs the circulating nurse to put the table in slight Trendelenburgh position.					
39. Elevates the peritoneum by grasping it at 2 points 1-2 cm. apart with hemostats.					
40. Hands over one forcep to assistant and instructs him/her to gently lift the peritoneum.					
41. Checks that the bowels, omentum, or bladder have not been grasped inadvertently with the peritoneum by checking translucency and thinness.					
42. Opens the peritoneum and repositions the retractors inside the abdominal cavity.					
DELIVERY AND OCCLUSION OF THE FALLOPIAN TUBES					
43. Depresses the uterine elevator to raise the uterine fundus close to the incision.					
44. Feels for the fundus with the use of the blades of the retractors.					
45. Once the fundus is bumped by the retractors, moves out the omentum or bowels covering the fundus.					
46. Once the uterus is visualized, instructs the assistant to hold the retractors and move them to the side of the tube that is being accessed.					
47. While directly viewing the uterine fundus, gently rotates the handle of the uterine elevator in the opposite direction of the tube being accessed.					
48. Grasps the tube with Kelly forceps held by the free hand. Lets go of the uterine elevator at this point.					
49. Pulls the tube further and "walks through" it until the fimbrial end is identified. Do not lock the forceps as this is done.					
50. Identifies an avascular area of the tube and clamps with Kelly forcep.					
51. Instructs assistant to hold the Kelly holding the tube upward.					
52. Creates a 1-2 cm loop of tube.					
53. Ties the loop of tube tightly and with a surgical knot.					
54. Excises the tube above the knot leaving at least 0.5 cm tubal stump.					
55. Examines the tubal stump for bleeding.					

SUPRAPUBIC MINILAPAROTOMY					
TASK/ACTIVITY	**CASES**				
56. Cuts the suture above the knot so that the tube returns to the abdomen.					
Repeats the tasks for "Delivery and Occlusion of the Tubes" to identify and occlude the other fallopian tube.					
57. Instructs the circulating nurse to return the position of the surgical table from Trendelenburgh to its normal horizontal position.					
CLOSING THE ABDOMEN					
58. Grasps both sides of the fascia with forceps.					
59. Instructs the assistant to expose the fascia using the retractors.					
60. Closes the fascia with continuous interlock sutures starting from one end.					
61. Closes the skin with subcuticular sutures.					
POST-OPERATIVE					
62. Dresses the wound.					
63. Removes the uterine elevator and puts it in a container with 0.5% chlorine solution.					
64. Places all used instruments in 0.5% chlorine solution.					
65. Immerses gloved hand in chlorine solution, removes gloves inside out, and immerses these in chlorine solution.					
66. Helps the client off the operating table and ensures that she is appropriately escorted to the recovery room.					
67. Washes hands with soap and water.					

SUBUMBILICAL MINILAPAROTOMY					
TASK/ACTIVITY	**CASES**				
PRE-OPERATIVE					
1. Verifies client's identity.					
2. Reviews client history and physical examination to ensure that there have not been complications during labor and delivery that could adversely affect the procedure.					
3. Determines the condition of the infant.					
4. Checks informed decision making and informed consent obtained. Verifies voluntarism.					
5. Ensures that the client has emptied her bladder before entering the operating room.					
6. Ensures that needed instruments are available and properly processed.					

SUBUMBILICAL MINILAPAROTOMY					
TASK/ACTIVITY	**CASES**				
7. Ensures that needed medications/drugs for the procedure and for possible emergency are available.					
8. Ensures that intravenous line is properly inserted by the circulating nurse.					
9. Positions client in dorsal supine position.					
10. Washes hands with soap and water.					
11. Performs abdominal examination to determine level of the uterus.					
12. Instructs circulating nurse to administer Meperidine 50 mg. by slow IV and Diazepam 5 mg. initially and add 5 mg. if client is observed to be anxious.					
13. Performs surgical scrub and puts on surgical garments and sterile gloves.					
14. Checks that the abdomen has been appropriately prepared.					
15. Creates a sterile field by draping the client.					
INFILTRATION OF LOCAL ANESTHESIA					
16. Chooses the incision site as just below the umbilicus.					
17. Infiltrates the abdominal wall (using the fan-shaped technique) with 10 cc. 2% lidocaine or 20 cc. 1%lidocaine.					
18. Checks for effective anesthesia block by pinching with tissue forceps the subumbilical area.					
ENTERING THE ABDOMEN					
19. Pulls the skin taut to make a transverse incision approximately 2-3 cm. in length beneath the umbilicus.					
20. Dissects the subcutaneous layer bluntly with Kelly forceps or retractors until the anterior rectus fascia is visualized and exposed. Maintains midline dissection.					
21. Instructs assistant appropriately to expose the operative field.					
22. Incises the fascia creating a transverse slit through the whole thickness of the fascia.					
23. Grasps the edges of the slit with Kelly or Allis forceps.					
24. Lifts the fascia while extending the incision transversely.					
25. Elevates the peritoneum by grasping it at 2 points 1-2 cm. apart with hemostats.					
26. Checks that the bowels, omentum, or bladder have not been grasped inadvertently with the peritoneum by checking translucency and thinness.					
27. Opens the peritoneum and repositions the retractors inside the abdominal cavity.					
DELIVERY AND OCCLUSION OF THE FALLOPIAN TUBES					

SUBUMBILICAL MINILAPAROTOMY					
TASK/ACTIVITY	**CASES**				
28. Pushes the uterus toward the opposite side of the tube being accessed.					
29. Gently moves the incision to the tube that is being accessed with the assistant following the direction of the surgeon using the other retractor.					
30. Clears out the omentum or bowels covering the fundus.					
31. Grasps the tube with Kelly forceps.					
32. Pulls the tube further and "walks through" it until the fimbrial end is identified. Does not lock the forceps as this is done.					
33. Creates a 1-2 cm. loop of tube.					
34. Ties the loop of tube tightly and with a surgical knot while the assistant holds the Kelly with the tube.					
35. Holds the sutures with forceps.					
36. Excises the tube above the knot leaving at least 0.5 cm. tubal stump.					
37. Examines the tubal stump for bleeding.					
38. Cuts the suture above the knot so that the tube returns to the abdomen.					
Repeats the tasks for "Delivery and Occlusion of the Tubes" to identify and occlude the other fallopian tube.					
39. Instructs the circulating nurse to return the position of the surgical table from Trendelenburgh to its normal horizontal position.					
CLOSING THE ABDOMEN					
40. Grasps both sides of the fascia with forceps.					
41. Closes the fascia with continuous interlock sutures starting from one end.					
42. Closes the skin with interrupted sutures.					
POST-OPERATIVE					
43. Dresses the wound.					
44. Places all used instruments in 0.5% chlorine solution.					
45. Immerses gloved hand in chlorine solution, removes gloves inside out, and immerses these in chlorine solution.					
46. Helps the client off the operating table and ensures that she is appropriately escorted to the recovery room.					
47. Washes hands with soap and water.					

Session 10

POST-OPERATIVE RECOVERY AND DISCHARGE

OVERVIEW

The immediate post-operative recovery period is a critical time because it is at this time that the effects of surgical trauma or other complications first become apparent. Although nurses or other staff members will carry out tasks related to post-operative recovery and discharge, it is essential that the surgeon supervises recovery room care and retains ultimate responsibility for its quality.

This session provides the information needed by the staff to carry a safe and efficient management of post-operative care of clients until discharge.

LEARNING OBJECTIVES

At the end of the session, the participants will be able to:

1. Describe the tasks of the client monitor during the client's immediate post-operative recovery period.
2. Recognize the signs of post-operative complications.
3. Enumerate the signs of clients' readiness for discharge.
4. Explain the components of post-operative instructions to clients.

NARRATIVE

POST-OPERATIVE MONITORING

In the post-operative period, staff observes the client constantly. The post-operative client monitor (this may be the same staff member responsible for intraoperative monitoring) receives the client from the operating room and reviews the client record. When moving the client, the monitor handles her gently; making sure the client is comfortable while in the recovery area.

The post-operative client monitor keeps track of the client's recovery from the anesthesia and the surgery. The monitor checks and records the client's vital signs - blood pressure, respiration, and pulse - every 15 minutes until they are stabilized at preoperative levels, then as necessary until client has fully recovered from the effects of anesthetics.

For interval cases, the post-operative client monitor checks for vaginal bleeding other than menstruation. If the client is bleeding, the monitor informs the surgeon who checks for injury to the cervix or uterus caused by the uterine tenaculum. The monitor checks the surgical dressing for oozing or bleeding and observes the general condition of the client (including monitoring changes in skin color, post-operative pain, level of consciousness, and orientation to time and space).

The monitor administers drugs and treatment for pain and other symptoms according to the surgeon's orders and provides bland carbohydrates and liquids to raise blood sugar levels. All data pertaining to the recovery period are recorded on the client’s chart.

DETERMINING CLIENT READINESS FOR DISCHARGE

Sometimes a client is not ready for discharge and may even require overnight observation following surgery. If she is unable to retain fluids (is vomiting) or is unable to ambulate (is unsteady when standing), then she is not ready for discharge.

If she shows signs of hypovolemia, such as the inability to void, dizziness, or increased pulse rate when going from lying to sitting or standing, she should be rehydrated and observed. (An increase in the pulse when going from a lying to a sitting position with legs dangling is a more sensitive indicator of hypovolemia than is low blood pressure.) If these symptoms worsen, the monitor must inform the surgeon because of the possibility of intra-abdominal hemorrhage.

An incomplete recovery from sedation or anesthesia is another indication that the client is not ready for discharge. If she does not recover in time to arrive home at a reasonable hour, then she should not be discharged. She should also remain at the facility if no responsible adult is available to accompany or transport her home.

Only after sufficient recovery is the client allowed to be discharged. She must be able to take fluids and light nourishment and retain them. She needs to walk upright with minimal support. If she is perspiring, it must be only for reasons related to climate. Her vital signs must be at preoperative levels. The wound must show no bleeding or seepage.

As a prerequisite to discharge, staff must ensure that the client knows the signs of complications to watch out for and understands specific instructions, including:

- That she should return to the clinic immediately or seek emergency care if a problem develops.
- The post-operative instructions and be able to repeat them, including the date of scheduled follow-up.
- How to obtain any home medications that have been ordered.

Finally, the operating surgeon or his or her designee must confirm that the client is ready for discharge. The client should then be provided with written post-operative instructions.

POST-OPERATIVE INSTRUCTIONS

Before discharge, a staff member gives the client written post-operative instructions and asks her to repeat them, gives her a follow-up appointment, and confirms that she is ready for discharge. Clients should also be advised to take paracetamol or another safe locally available pain reliever as needed. (The surgeon or his/her designee performs this last task.)

Post-operative instructions to the client may vary depending on the facility and the client.

However, basic information must be addressed. The client must know how to care for the wound. She should know which symptoms are normal side effects of the procedure and which are signs of complications, indicating that she should return to the clinic. In emergencies, she must be able to contact the proper personnel and go to the appropriate place. She needs to know when it is safe to resume normal activities, including sexual relations. Finally, she needs to understand the importance of a follow-up visit and when and where to go for it.

Written post-operative instructions should be given to all clients for discharge, if an illiterate client is unable to read them, she can usually find a literate person to read them for her.

REST AFTER SURGERY

The healthy client having an interval procedure should be able to return to completely normal activities within seven days after surgery. For healthy women who undergo minilaparotomy immediately after delivery of a child, the procedure should not extend the normal postpartum hospitalization. For example, in hospitals where women are discharged within 24 hours following a normal vaginal delivery, an uncomplicated postpartum minilaparotomy done within that period of time should not require extended hospitalization.

SAMPLE POST-OPERATIVE INSTRUCTIONS

1. Avoid physical work and strenuous exercise for at least one week to allow the abdominal incision to heal. Resume normal activities after two or three days.
2. Take prescribed simple analgesic every 4-6 hours for relief of pain or discomfort.
3. Keep the incision site (wound) clean and dry.

   Steps in Cleaning:

   a. Clean with hydrogen peroxide and dry
   b. Apply antiseptic solution – Betadine
   c. Cover with sterile or clean gauze (OS)
   d. Apply plaster
4. Bathing should be 1 day after surgery. When you bathe, keep the incision site dry. Avoid pulling, rubbing or otherwise irritating the incision site.
5. If the suture is absorbable tell the patient that the stitches will dissolve by themselves, however, if non-absorbable sutures such as silk patient should come back 5-7 days after surgery for removal.
6. Pain at the incision site is a normal symptom after the surgery.
7. Consult the doctor or health workers immediately if you have the following symptoms which are danger signals

   - fever
   - abdominal pain that is persistent or increasing
   - bleeding or pus from the incision site
   - suspected pregnancy (missed period) especially if accompanied by vaginal bleeding or pain at any time in the future.
7. Sexual intercourse should be avoided one (1) week after surgery.
8. Return to the facility for a follow-up visit on _____.

_____
PRINTED NAME AND SIGNATURE
(Doctor, Nurse or Midwife)

MGA TAGUBILIN PAGKATAPOS NG OPERASYON

1. Iwasan ang pisikal na gawain at ehersisyong mabigat nang mga isang linggo upang maghilom ang hiwa sa tiyan. Ipagpatuloy ang normal na gawain pagkaraan ng dalawa o tatlong araw.
2. Uminom ng iniresetang gamot (analgesic) tuwing 4-6 na oras para maalis ang sakit o hirap.
3. Panatilihing malinis at tuyo ang hiwa (sugat).

   Paraan ng paglilinis:

   a. Gumamit ng *hydrogen peroxide* at punasan.

   b. Lagyan ng *antiseptic solution – Betadine*.

   c. Takpan ng esterilesado o malinis na gasa (OS).

   d. Lagyan ng plaster.
4. Ang paliligo ay dapat isang (1) araw pagkatapos ng pagtitistis. Kapag naligo, panatilihing tuyo ang hiwa. Iwasan ang paghila, pagkamot o paghipo sa lugar ng hiwa.
5. Kung ang tahi sa sugat ay natutunaw, sabihin sa pasyente na ang mga tahi ay kusang matutunaw. Kung ang panahi na ginamit ay hindi kusang natutunaw tulad ng sutla, ang pasyente ay dapat bumalik 5-7 araw pagkatapos ng pagtitistis para maalis ang tahi.
6. Ang pananakit at pagkirot sa lugar ng hiwa ay normal na palatandaan pagkatapos ng patitistis.
7. Kumunsulta agad sa doktor o mga katulong sa panggagamot kung isa sa mga sumusunod ay mapansin. Ito ay maaring hudyat ng panganib:

   - lagnat
   - matinding sakit ng tiyan
   - pagdurugo o nana mula sa lugar ng hiwa
   - pamamaga sa lugar ng hiwa
   - hindi dinadatnan ng buwanang dalaw – lalo na kung dinudugo o sumasakit ang tiyan.
8. Hindi dapat magtalik ng mga isang (1) linggo pagkatapos ng pagtitistis.
9. Bumalik para sa susunod na pagkunsulta sa _____.

_____

PANGALAN AT LAGDA (Ilimbag)
(Doktor, Nars o Kumadrona)

TRANSFER OF CLIENT RECORDS

All of the client's records should be maintained at the site where the procedure took place. If the follow-up will take place at another facility, the client should receive a card to give to the follow-up provider, indicating the date of procedure, the type of procedure, and any special instructions. If it is necessary to transfer a copy of the client's records, the original should be kept at the facility where the surgery took place, to facilitate program evaluation.

SIGNS OF POSTOPERATIVE COMPLICATIONS

Staff must also be alert to complications, which may be signaled by:

- Inability to retain fluids (vomiting)
- Inability to urinate
- Inability to ambulate (client is unsteady when standing)
- Signs of hypovolemia (client feels like fainting upon rising, has rapid heart rate, is unable to void)
- Excessive somnolence
- Breathing rate of less than 10 respirations (breaths) per minute
- Hyperventilation
- Systolic blood pressure of less than 90 mm. mercury
- Rapid pulse rate (over 90 beats per minute)
- Weak pulse
- Pallor
- Perioral cyanosis

Whenever a complication is suspected, the surgeon must be informed and must evaluate the client. If the surgeon feels the client requires treatment at another facility, s/he must make those arrangements.

Session 11

MANAGEMENT OF COMPLICATIONS

OVERVIEW

Programs must ensure the safety of women undergoing ML/LA. Surgeons must be trained and skilled in the techniques they are using, in the use of appropriate and safe anesthesia, in the proper use of a uterine elevator, in emergency abdominal surgery, in identifying complications should these occur, and in other procedures for managing emergencies. Minilaparotomy clients do not die of complications, but they can die of "complications of a complication.

This session provides the necessary information in preventing, identifying, and managing complications.

LEARNING OBJECTIVES

At the end of the session, the participants will be able to:

1. State the main causes of complications of BTL/MLLA.
2. Discuss the anesthesia-related complications as to the:
   - Possible complications
   - Signs of complication
   - Contributing factors to complications
   - Management
3. Discuss surgical injuries which causes complications as to their :
   - Prevention
   - Types of incurred during surgery
4. Discuss important issues related to:
   - Pregnancy
   - Death

REFERENCES

Khairullah Z., Huber D.H., Gonzales B. Declining mortality in international sterilization services. *Int J Gynecol and Obstet* 1992; 39:41–50.

NARRATIVE

GUIDING PRINCIPLES

Surgical complications can and do occur even when staff has taken appropriate preventive measures. Early recognition and treatment of complications are essential.

Experienced doctors have said that, in the case of minilaparotomy under local anesthesia, clients do not die of complications, but they can die of "complications of a complication." In other words, the persons involved in recognizing or treating the complication did something that made the complication worse, or failed to do something that might have relieved the condition.

All members of a surgical team, not just the doctor, are responsible for identification and management of complications. Proper and prompt management of a complication protects the health and perhaps the life of the client, protects the staff, protects the program, and protects the reputation of the procedure.

Because an anesthetist is not usually present when minilaparotomy is done under local anesthesia, the doctor and the other surgical team members must know how to identify and manage complications related to sedatives and narcotics.

Some complications associated with minilaparotomy are not recognizable until after the client is discharged from the facility. The staff working in the follow-up clinic should have the capability of identifying signs of complications such as wound or pelvic infection, peritonitis resulting from an unrecognized bowel injury, and pregnancy. The staff should be able to report these late complications and manage them or make referrals for their management.

One of the primary goals of training in minilaparotomy is to teach techniques and skills that will keep complications to a minimum. Prevention must be stressed throughout training courses and during service delivery.

By using the proper and cautious surgical techniques and follow-up staff can prevent complications related to surgical trauma.

Many of the complications potentially associated with minilaparotomy are common to general abdominal surgery, and their management is dependent upon general surgical knowledge and skills. Such complications include vasovagal syncope, hemorrhage, wound infection, and aspiration of gastric contents. Because most providers have confronted these complications in their surgical practices, this chapter does not address them.

DEFINITION OF TERMS

A **side effect** is a consequence of the procedure that does not require exceptional intervention. (e.g., abdominal cramping)

A **complication** is an abnormal condition caused by the procedure that requires intervention or management beyond what was planned. (A wound infection noted on the fifth day after surgery that requires incision and drainage is an example of a complication.)

PREVENTING COMPLICATIONS OF MINILAPAROTOMY

For both postpartum and interval procedures, the surgeon should take the following steps to minimize complications:

1. Routinely have the client empty her bladder just before surgery, to avoid incising the bladder.
2. Examine a fold of the peritoneum before incising, to ensure that nothing is adherent below.
3. Perform the surgery gently, to prevent tearing and bleeding of the fallopian tubes and mesosalpinx.
4. Use a non-toothed instrument, such as a straight artery forceps (Kelly) or a baby Babcock to grasp intra-abdominal tissue.
5. Expose the fimbrial end of the tube to confirm identification.
6. Apply ligatures or clips carefully and correctly.
7. Inspect the tissues thoroughly before closing the incision, to make sure there is no bleeding.
8. Strict adherence to infection prevention practices.

Postpartum Procedures

For postpartum procedures, the surgeon should take the following steps to minimize complications:

- Do not use a uterine elevator.
- Perform surgery gently to avoid trauma to the uterus and fallopian tubes
- Perform surgery within 48 hours of delivery.
- Rule out any condition that would increase the risk of infection or complications from anesthesia. Infection is an indication for postponement after vaginal delivery; other such indications are intrapartum or postpartum hemorrhage resulting in severe anemia, and pulmonary or cardiac problems.
- Use caution in making the incision in the thin abdominal wall near the umbilicus, so as not to cut the structures underneath.

Interval Procedures

For interval procedures, the doctor should take the following steps to minimize complications:

- Insert the uterine elevator properly and manipulate gently to avoid perforating the uterus while also testing for mobility or presence of pain.

IMMEDIATE ACTION REQUIRED

In addition to taking the specific emergency measures detailed throughout this chapter, surgical staff should do the following when a complication arises:

- Discontinue the minilap procedure while emergency treatment is under way and may resume/complete the procedure, when client's condition has stabilized.
- Return a Trendelenburg table to the horizontal position

- Complete the surgery only if the client's condition has stabilized.
- Consider hospitalizing the client for observation.
- Record the complication and the treatment rendered.

ANESTHESIA COMPLICATIONS

Complications Related to the Anesthesia Regimen

- Respiratory depression or arrest
- Cardiovascular changes, including arrhythmia, hypotension, or hypertension
- Cardiac arrest
- Convulsions
- Aspiration of vomitus

Signs of Anesthesia-Related Complications

- Decreased breathing rate
- Short, shallow, quick breathing
- Dyspnea, gasping, laryngeal stridor
- Peribuccal cyanosis (blueness around the mouth)
- Cyanotic nail beds (bluish fingernail beds)
- Irregular or rapid pulse
- Central nervous system changes (restlessness, anxiety, and disorientation)
- Convulsions or loss of consciousness
- Hypotension
- Absence of pulse, heart sounds, respiration, reflexes, and muscle tone

Factors

- Overdose of analgesic
- Overdose of sedative or tranquilizer
- Combined effect of drugs
- Delayed effect (drugs reaching their peak of effectiveness after monitoring has been relaxed)
- Intravascular injection of lidocaine
- Overdose of lidocaine (which may be a result of use of an undiluted 2% solution)
- Pre-existing cardiac disease

- Severe blood loss with intravascular volume depletion

The above factors themselves may have a variety of causes:

- Staff may fail to recognize signs of an overdose.
- The client monitor may be distracted by other duties.
- Staff may lack knowledge of medicines used in the procedure.
- Emergency equipment may be unavailable or nonfunctioning.
- Staff may lack skills in the use of emergency equipment.
- Antidotes (naloxone, physostigmine, flumazenil) may not be available.
- Staff may be unclear about their roles and responsibilities for taking action when the doctor is absent or before the doctor arrives.

MANAGEMENT OF COMPLICATIONS

Cardio-respiratory Arrest

Treatment of cardio-respiratory arrest is extremely urgent; irreversible brain damage will occur if the oxygen supply to the brain is cut off for more than three minutes. It is possible to maintain the circulation and ventilation of the lungs by active resuscitation while the underlying cause of the arrest is treated, and many persons recover well after such treatment.

When faced with a collapsed client, staff should first check the airway, breathing, and circulation (this takes about 15 seconds). Upon recognition of cardio-respiratory arrest, the following should be done immediately:

- Start resuscitation and do not leave the client. Request for immediate assistance.
- Clear the airway and inflate the lungs by whatever means are available: the resuscitator's own expired (by mouth-to-mouth) air, a bag or bellows, or oxygen.
- If the client has no major pulse, start external cardiac massage. With one hand on top of the other, staff should press sharply down on the lower third of the sternum in the midline; this compresses and empties the heart between the sternum and vertebral column. A massage rate of 60 compressions per minute is appropriate. After every four compressions, inflate the lungs once; watch the chest rise and fall with each inflation.
- When possible, look at the client's pupils. Small pupils indicate effective resuscitation; fixed, dilated pupils may indicate brain damage from hypoxia. If the pupils are initially large, but then become smaller, the resuscitative efforts are succeeding.
- When help is available, set up an intravenous infusion while maintaining ventilation and massage, and give sodium bicarbonate in a dose of 1 mmol./kg. of body weight (an 8.4% sodium bicarbonate solution contains 1 mmol./ml.).
- Obtain an electrocardiogram to confirm that the cardiac rhythm has been reestablished, and treat any dysrhythmias.

- Investigate the cause of the cardiac arrest and try to determine why it happened when it did. Consider possibilities such as the following:
  - Hypoxia
  - Drug overdose
  - Allergic reaction
  - Myocardial infarction
  - Pulmonary embolism
  - Hypovolemia
  - Disturbance of electrolytes (specially potassium)

Treat the underlying cause of the arrest once it is identified.

Consider using the following drugs for immediate management:

- Calcium gluconate for poor myocardial function and short-term protection against hyperkalemia, up to 1 g. intravenously
- Epinephrine, 0.5 mg. subcutaneously for allergic reactions; 0.1–0.5 mg. intravenously for asystole (confirmed by electrocardiogram, or if there is no cardiac output in spite of an acceptable heart rhythm)
- Atropine, 1 mg intravenously for bradycardia

If resuscitation is successful, staff should ensure that the client continues to receive treatment for the underlying cause of the cardiac arrest. Staff should maintain a safe airway after the client starts to breathe spontaneously again. The endotracheal tube should stay in place until the client has regained consciousness and protective reflexes.

Drugs Used to Treat Anesthesia-Related Complications

For drug overdose

- Narcotic antidote (naloxone)
- Benzodiazepine antidote (physostigmine or flumazenil)

For cardiac arrest (only used during assisted respiration and cardiac resuscitation)

- Epinephrine
- Lidocaine
- Sodium bicarbonate solution
- Calcium chloride

SURGICAL TRAUMA

Complications Related to the Surgical Procedure

- Injury to the bladder
- Injury to the bowel
- Injury to the uterus
- Uterine perforation
- Injury to the fallopian tube
- Injury to blood vessels causing bleeding

Bladder Injury

Signs of Bladder Injury

- **Intraoperatively**
  - Clear fluid welling up into the incision or operative site
  - Sight of the rugal folds of the bladder mucosa
- **Postoperatively**
  - Hematuria
  - Suprapubic pain
  - Fever or signs of infection

Contributory Factors

- Failure to ensure bladder was emptied before surgery
- Inappropriate location of the incision
- Failure to check for translucence of the grasped fold before incising

Treatment of Bladder Injury

- Insert an indwelling (Foley) catheter.
- If bladder injury is suspected, instill a sterile solution (methylene blue, gentian violet, sterile water or milk, or intravenous solution) into the bladder through the catheter.
- Repair the injury in two layers, using continuous suture of fine catgut with an atraumatic needle.
- Continue the tubal occlusion procedure if the injury is minor.
- Initiate a course of antibiotics.
- Hospitalize if the injury is extensive.

- Remove the catheter seven days later and monitor for ability to void.

Bowel Injury

Signs of Bowel Injury

- Intraoperatively
  - Visualization of bowel serosa or muscularis
  - Visualization of bowel contents
- Postoperatively
  - Abdominal pain that increases in severity
  - Vomiting
  - Failure to pass flatus
  - Abdominal distension
  - Abdominal tenderness

Contributory Factors

- Failure to feel the grasped fold of peritoneum to ensure bowel is not adherent to it before opening.
- Failure to look for translucence of the tissue fold before opening
- Quick and deep entry through the thin abdominal wall at the umbilicus during postpartum procedures

Treatment of Bowel Injury

- Promptly repair the defect with fine silk suture in multiple layers, using an atraumatic needle.
- If the injury is superficial (serosal layer only), allow the client to rest an extra hour, then discharge with instructions to return immediately if pain or fever begins. Make arrangements for follow-up of client in order to monitor any change in condition over the next 48 hours.
- If the injury is through to the bowel lumen, initiate intravenous antibiotics and hospitalize the client for observation following the repair.
- If fecal matter is expelled into the abdomen, lavage the peritoneal cavity with sterile solution (for example, normal saline).
- Complete the tubal occlusion procedure after repairing the bowel.

Uterine Perforation

Signs of Uterine Perforation

- Tip of elevator seen protruding through the uterine wall.

- Inability to elevate the uterus against the abdominal wall
- Superficial palpation of the tip through the abdominal wall
- Metallic sound of the tip against the abdominal retractors
- Bleeding

Contributory Factors

- Improper insertion of the uterine elevator
- Rough manipulation of the uterine elevator
- Postpartum uterus that is still soft (even at six weeks)

Treatment of Fundal Uterine Perforation

- If the uterus is anteverted, consider leaving the elevator in place while the tubes are occluded, using extreme gentleness if the uterus is manipulated.
- If the uterus is retroverted, consider repositioning the elevator, rotating the elevator to an anteverted position, and then occluding the tubes.
- After the tubes are occluded, remove the elevator and examine the perforation site for bleeding (usually only a slight oozing).
- If fresh bleeding occurs, control it with a "figure of 8" suture, using catgut (preferably chromic catgut).
- If bleeding has been controlled, close the abdomen and observe the client for an extra one to two hours.

Initiate a course of antibiotics

- Consider hospitalization if continuous bleeding is suspected or if posterior perforation with vessel injury occurred.

Pregnancy or Failure

Pregnancy can occur immediately after minilaparotomy or many years later. Two types of pregnancies can occur after minilaparotomy: intrauterine and ectopic. The signs and management of pregnancy following minilaparotomy are the same as for any other pregnancy.

Four issues are of particular importance:

- Staff should be prepared to manage pregnancies that occur after sterilization surgery, or to refer clients appropriately.
- Supervisors or managers need to review the signs/symptoms and management of ectopic pregnancy with staff working in follow-up clinics.
- Staff must be sure that clients understand that failure is a possibility and that they should go to a health care facility if they have any symptom of pregnancy. This is especially important because ectopic pregnancy is potentially life threatening.

- Health care workers in the field must know that pregnancy is a possible complication and must advise clients to go to a health facility if they think they may be pregnant.

Signs of Ectopic Pregnancy

- Sudden intense pain, persistent pain, or cramping in the lower abdomen, initially then becoming generalized.
- Irregular bleeding or spotting with abdominal pain after a missed or abnormally light menstrual period.
- Fainting or dizziness that is associated with either of the above conditions and that persists for more than a few seconds (which could indicate internal bleeding).

Death

Worldwide experience has shown that deaths associated with minilaparotomy are very rare (5.1/100,000 from 1982 to 1988).[1] Because minilaparotomy under local anesthesia is an elective procedure that usually carries very little risk to the client, program managers must carefully analyze every death to determine the following:

- The immediate and contributing causes
- Whether the death was attributable to the minilaparotomy procedure
- Whether the death was attributable to the anesthesia regimen
- Whether staff could have anticipated or prevented any of the factors in the death
- Corrective measures to prevent occurrence of a similar death

CASE STUDIES

1. Ten minutes after IV administration of Meperidine 50 mg. and Diazepam 10 mg., client was still noted to be awake. The surgeon ordered additional of 25 mg. Meperidine and 5 mg. Diazepam by slow IV. A few minutes after administration of these additional medications, client was noted to have shallow, rapid breathing with beginning peribuccal cyanosis.
2. After infiltration of the operative site with Lidocaine 2%, client went into convulsive seizures.
3. Upon opening the abdomen of a postpartum client, a gush of urine-smelling fluid was noted.
4. Post-minilaparotomy client had an uneventful operative course until 24 hours after the procedure when she comes back to the clinic complaining of vomiting with severe abdominal pain and distension. On examination, client was febrile and the abdomen was noted to be rigidly distended, tender, and absent bowel sounds on auscultation.
5. Post-minilaparotomy client had an uneventful operative course until 24 hours after the procedure when she comes back to the clinic complaining of abdominal pain and a large bluish, red mass beneath the skin and the dressing soaked in blood. On examination, the incision wound was oozing with blood and a bluish, red mass was noted on the abdominal wall.

Session 12

FOLLOW-UP

OVERVIEW

The post-operative follow-up is an opportunity to assess clients' reaction to the BTL/MLLA procedure performed on her. It is the time to determine any surgical problems and to respond to clients' additional concern on the use of the method and its permanence. These are important reasons for a follow-up visit to be scheduled a week after surgery in a facility convenient to the clients and with staff that are knowledgeable on conducting this.

This session provides the necessary information on doing post-BTL/MLLA follow-up.

LEARNING OBJECTIVES

At the end of the session, the participants will be able to:

1. Describe the two kinds of follow-ups for post-BTL/MLLA clients.
2. Discuss the components of routine and emergency follow-ups.
3. Explain what to do for failure of tubal occlusion resulting in pregnancy.

NARRATIVE

A follow-up visit should be scheduled at the time of surgery to take place within seven days of surgery and, when possible, should be conducted by the operating surgeon. However, it may be more practical for another member of the surgical team to examine the client, or for the client to visit her nearest health center. A trained, qualified health professional who is not a surgeon can conduct the examination and manage minor complications. If another health center provides follow-up care for minilaparotomy clients, its staff must be trained to do a careful examination and must communicate any observed complication to the facility where the surgery took place.

ROUTINE FOLLOW-UP

During the routine follow-up visit, staff assesses the client to determine if she has any side effects or complications related to the surgery. In addition to looking for medical problems, staff looks for signs that the client may be experiencing dissatisfaction, regret, or maladjustment related to the procedure.

Staff conducting routine follow-up must check the medical record or referral form to ascertain the background information of the client and of the surgical procedure. It is also important to determine if the client has experienced any problems or had any complaints since the surgery. Thus, staff should ask about the following:

- vaginal discharge or abnormal bleeding
- wound discharge or bleeding
- urinary difficulties
- fever, pain, or other distress

The following are performed during follow-up:

- operative site is examined to assess healing and the absence of infection. It is cleaned, and non-absorbable sutures, if used, are removed.
- refer to a physician or the surgeon for treatment of any complications identified during the examination
- making the appropriate referrals and follow-up appointments as needed.
- remind the client to return to the clinic if she misses a period or has other symptoms of pregnancy.
- medical complaints, diagnosis, and treatment at the follow-up visit are documented in the client's medical records.

EMERGENCY FOLLOW-UP

An emergency follow-up visit may take place any time after the operation and client discharge. Clients requesting or making an emergency follow-up visit require immediate attention. Possible complications must be attended to before they can cause other problems or before they become life threatening. Staff interviewing clients who return to the clinic one to three days after surgery with a complaint must be

alert to the possibility of internal bleeding, bowel or bladder perforation, or infection.

In many cases, surgeons are not available during an emergency client visit. Often emergency clients first see a nurse. It is important for the surgeon to ensure that other staffs recognize the signs of possible complications and know how to manage them.

When conducting emergency follow-up, the clinic staff evaluates the client immediately and obtains chronological information from the client, including problems during the procedure or the recovery period, the development of problems or increase in discomfort, and any medications taken or treatments obtained. The medical record is reviewed if it is available.

If the examining staff is not a physician, the client refers her to a physician or the surgeon who decides whether treatment for the problem can be handled on an out-patient basis or whether the client must be hospitalized. They arrange an appropriate level of treatment for potentially serious complications. All problems and actions taken are noted on the client record form.

If a client requests emergency care at a health facility other than the site where she had surgery, a report of any complications and treatment should be sent to the facility where the procedure took place.

FAILURE OF TUBAL OCCLUSION

Tubal occlusion is one of the most effective methods of contraception, and failure is unlikely after minilaparotomy because the surgeon has an opportunity to examine the tube under direct vision, thus verifying that the procedure is being carried out appropriately. Nevertheless, even though the risk is low, staff must be aware that ectopic or intrauterine pregnancy is possible after any tubal occlusion procedure, and they must be prepared to identify such conditions early. Lower abdominal pain, amenorrhea, and abnormal uterine bleeding are prominent symptoms of an ectopic pregnancy. If staff suspects pregnancy, particularly ectopic, the client must be referred to the surgeon who explains the condition to the client and manages her condition appropriately (includes referral for diagnosis and/or further management).

Session 13

ACTION PLAN

OVERVIEW

Training courses are only as good as the learned training skills and knowledge applied by the trainees when they return to their original work areas. Developing and implementing an Action Plan is one of the ways to ensure that trained service providers transform learned training theory into reality in their workplaces. Application of a newly acquired skill requires the opportunity, resources and motivation to apply the learning on the actual job situation. It is important to remember that skills need to be practiced soon after training or these skills will be lost and will never be applied. All training courses require post-training follow-up for monitoring and evaluation during which the trained surgeons receive guidance and opportunities for coaching and mentoring from their trainers. It is also the opportunity to determine the extent to which the action plan has been and is being implemented and to provide the necessary assistance to help resolve issues that may be impeding the implementation of the action plan.

This session provides guidance in developing an Action Plan that will help trained BTL surgeons to successfully implement regular quality BTL services in their work areas.

LEARNING OBJECTIVES

At the end of the session, the participants will be able to:

1. Assess their facilities' suitability for the provision of ML-LA services.
2. Identify activities that will make them capable of providing ML-LA services in their facilities.
3. Develop an action plan so that they will be able to provide ML-LA services in their facilities.

NARRATIVE

Action planning is the process of intentionally and purposively writing down the next steps or activities that need to be done, when these steps need to be done, who will take responsibility for making sure that these steps are actually done, and enumerating the resources or inputs needed to actually do these next steps in order to realize certain strategic objectives.

Developing an action plan that indicates how and when new skills will be applied increases the likelihood of successful BTL services implementation. It likewise provides the opportunity for the trained BTL surgeon to establish how his/her newly acquired skills and knowledge will positively contribute to the improvement of his/her performance and the impact this will make on program goals and objectives.

ASSESSING SUITABILITY FOR THE PROVISION OF ML-LA SERVICES

In order to standardize requirements or expectations of a BTL-capable facility, a checklist of minimum requirements for BTL-MLLA service provision has been developed. This guide is categorized into minimum requirements for the facility, for its staffing, for its infection prevention practices, and for recording/reporting.

Please refer to Annex D on page 158: Checklist on ML-LA Service Requirements (Self-Assessment)

IDENTIFYING ACTIVITIES TO ENSURE SUCCESSFUL PROVISION OF ML-LA SERVICES

In ensuring the success of a BTL program in a hospital and consequently in the community, the trained BTL surgeon must be taken into consideration a number of important information and key factors. The following describes some of these programmatic elements that the trained surgeon must be well-informed of and which must be considered in developing and, later, implementing the action plan.

1. BTL client demand generation – all over the country, there is a huge estimated number of couples who no longer desire to have any more children and yet do not have access to permanent methods such as BTL. It is important therefore to make efforts at disseminating information about the availability of BTL services in the trained BTL surgeons' hospitals upon their return from training:
    a. Generating BTL clients from outside the hospital
        i. Link with public and private partners of the FP-MNCHN Service Delivery Network (SDN) of service providers and facilities in the area informing them of the regular schedule of BTL services in the hospital and the other related information – coordinate with RHUs, CHTs, 4Ps/CCTs/KP implementers
        ii. Coordinate with potential sources of clients such as formal employment sectors (workplaces – big companies) or groups of companies such as chambers, federations; informal workforce groups (cooperatives, peoples' organizations, civic organizations, etc.); academic institutions; NGOs, etc.
    b. Generating clients from within the hospital

i. FP education and information dissemination activities through health classes or posters, etc. must be regular features in hospitals, especially in OB wards, out-patient clinics or in waiting areas. Clients participating in these classes must be linked to FP and BTL services offered within the hospital. This includes FP counseling by trained hospital staff who can then refer interested clients for BTL.

ii. Inform all hospital staff of schedule of regular BTL services and other related information

iii. Posters with BTL services information may be placed in all hospital bulletin boards, wards, out-patient clinics, and other conspicuous areas

iv. An intra-hospital referral system must be put in place for a smooth flow for all potential BTL clients – patients, watchers, hospital staff/employees – to access FP counseling and eventually the actual BTL procedures.

2. Financing for BTL services *(possible sources of funding support)*

   a. PhilHealth benefits

      i. PhilHealth pays case payment rates of P 4,000.00 for each case of BTL performed by a PhilHealth-accredited BTL surgeon in a PhilHealth-accredited primary or secondary or tertiary care hospital on an eligible PhilHealth member *(PhilHealth Circular no. 16, series 2008; implementation of the PhilHealth benefit package for VSC including BTL/MLLA and NSV)*

      ii. 4Ps patients receiving CCT are likewise PhilHealth indigent cards holders and are automatically entitled to this benefit *(PhilHealth Circular No. 011-2011: New PhilHealth Case Rates for Selected Medical Cases and Surgical Procedures and the No Balance Billing Policy)*

      iii. NBB is required for public hospitals BUT is optional for private hospitals

   b. The hospital department of surgery or OB-GYNE must regularly request hospital management that some allocations for the usual drugs, supplies, etc. needed for regular BTL services be included in the hospital budget and procurement plan.

   c. Co-financing schemes may be explored with SDN partners, workplaces (using Corporate Social Responsibility funds), LGUs (from MNCHN grant or IRA), etc.

3. The availability of needed drugs, expendable supplies, instruments and equipment for performing BTL-MLLA must be regularly monitored and therefore ensured by hospital staff with supervision from the trained BTL surgeon/s, in coordination with hospital management.

4. Likewise, proper recording and reporting forms and systems must be established as part of good quality BTL services in the hospital:

   a. FP Form 1 – must be available and always used for ALL potential FP clients whether or not they choose a particular FP method. This is filled up by the field health unit staff midwife or nurse trained in (FP-CBT level 1) FP counseling and signed by the FP client if he/she chose a particular method. The filled up form is secured in a filing cabinet that cannot be easily accessed in order to maintain record confidentiality.

   b. Informed Consent Form – this is different from the regular consent for admission and surgical procedure normally signed by patients upon admission to any hospital. This

form contains six elements and is specific for clients choosing permanent FP methods of either BTL (for females) or No-Scalpel Vasectomy (for males). This form must be available at the OPD clinics where counseling occurs and at the operating room so that the trained BTL surgeon can verify the clients' understanding and informed and voluntary decision-making/choice. It is the BTL surgeon who has ultimate responsibility for ensuring the BTL clients understand and sign this informed consent form.

c. Surgical and Anesthesia Record – the usual Operating Room surgical record may be used for the purpose of recording the BTL-MLLA surgical technique and anesthesia procedure. The trained BTL surgeon must make sure that he/she signs this record. This record will eventually be the basis for PhilHealth professional fee payment for the surgeon.

d. Properly filled up Informed Consent Forms (b) and Surgical/Anesthesia Records (c) will eventually be filed with the hospital's records section. Information however will be summarized in the Operating Room logbook that is usually maintained in the Operating Room Complex of most hospitals.

e. Preferably, there should be a hospital staff trained in Field Health Services Information System (FHSIS) in order to capture the hospital's FP accomplishments. These, BTL accomplishments, must be summarized using the M1 form of FHSIS and submitted to whichever reporting unit has jurisdiction over the hospital or depending on previously agreed reporting arrangements.

f. It will be helpful for clients who have undergone BTL to receive post-operative written instructions that they can bring home as reminders and which will be explained clearly to them prior to discharge from the hospital.

5. Trained BTL surgeons are likewise enjoined to provide their BTL services in areas where there are no trained BTL surgeons and no regular BTL services. This is called BTL Itinerant or Mobile service and is usually organized by the DOH-CHD or the LGU or as an initiative of the hospital itself as a response to the unmet demand for BTL in many areas across the nation. DOH-AO No. 153 series 2002 mandates DOH-retained regional hospitals and medical centers to coordinate with the DOH-CHD and the LGUs to provide these services.

   a. Needless to say, all the above factors must be considered and put in place in order to ensure success of the itinerant BTL service.

   b. It is advisable that an assessment visit to the host facility or the off-site hospital (the hospital where the itinerant services will be provided) be conducted by the trained BTL surgeon/s to assess the needed items and adjustments that should be made prior to the actual itinerant BTL service provision.

   c. Additionally, proper screening of potential clients for BTL-MLLA must be coordinated with the host facility – these potential clients must be screened by the field health unit physicians or by physicians-staff of the host facility PRIOR to the arrival of the itinerant team. This is to ensure that only clients who are eligible for MLLA technique will come on the BTL day. This will minimize frustrations for both clients and surgeons. Women for whom MLLA cannot be done must be referred to the facility where spinal or general anesthesia can be employed instead of local anesthesia.

d. Arrangements and prior agreements on the process of PhilHealth claims (or other financing schemes, as applicable) as well as the distribution of professional fees, as applicable, must likewise be finalized before the actual conduct of the itinerant services.

e. As in hospitals with regular BTL services, accomplishments in host facilities where BTL itinerant services were performed should be recorded using the appropriate operating room reporting forms and summarized for submission using the FHSIS forms. These accomplishments should be submitted to whichever reporting unit has jurisdiction over the hospital (host facility) or depending on previously agreed reporting arrangements.

DEVELOPING AN ACTION PLAN

For this training course, action planning is intended to ensure the successful implementation of the BTL-MLLA program in the trained BTL surgeons' workplaces upon their return from the training. It is therefore the process of making plans to operationalize the implementation of regular BTL services in the trained BTL surgeons' hospitals.

Most action plans consist of the following elements:

- a statement of **what must be achieved** (the outputs or result areas);
- an enumeration of the **steps or activities** that have to be done to achieve what needs to be achieved;
- some kind of a **time schedule** for when each activity must take place and how long it is likely to take **(when)**;
- a clarification of **who will be responsible** for making sure that each step is successfully completed **(who)**;
- a clarification of **the inputs/resources** that are needed to implement the activity.

Below is a suggested template matrix:

ACTION PLAN MATRIX

ACTIVITIES	EXPECTED OUTCOMES	TIME FRAME	RESOURCE REQUIREMENTS		RESPONSIBLE PERSON
			Items	Costs	
Objective # 1:					
Objective # 2:					

ANNEXES

ANNEX A.
Instruments and Supplies for BTL/MLLA

Instruments used for inserting the uterine elevator

- Gauze
- Metal cup with antiseptic (Betadine)
- Sponge forceps
- Graves speculum
- Ramathobodi uterine elevator

Instruments used in performing BTL by minilaparotomy under local anesthesia

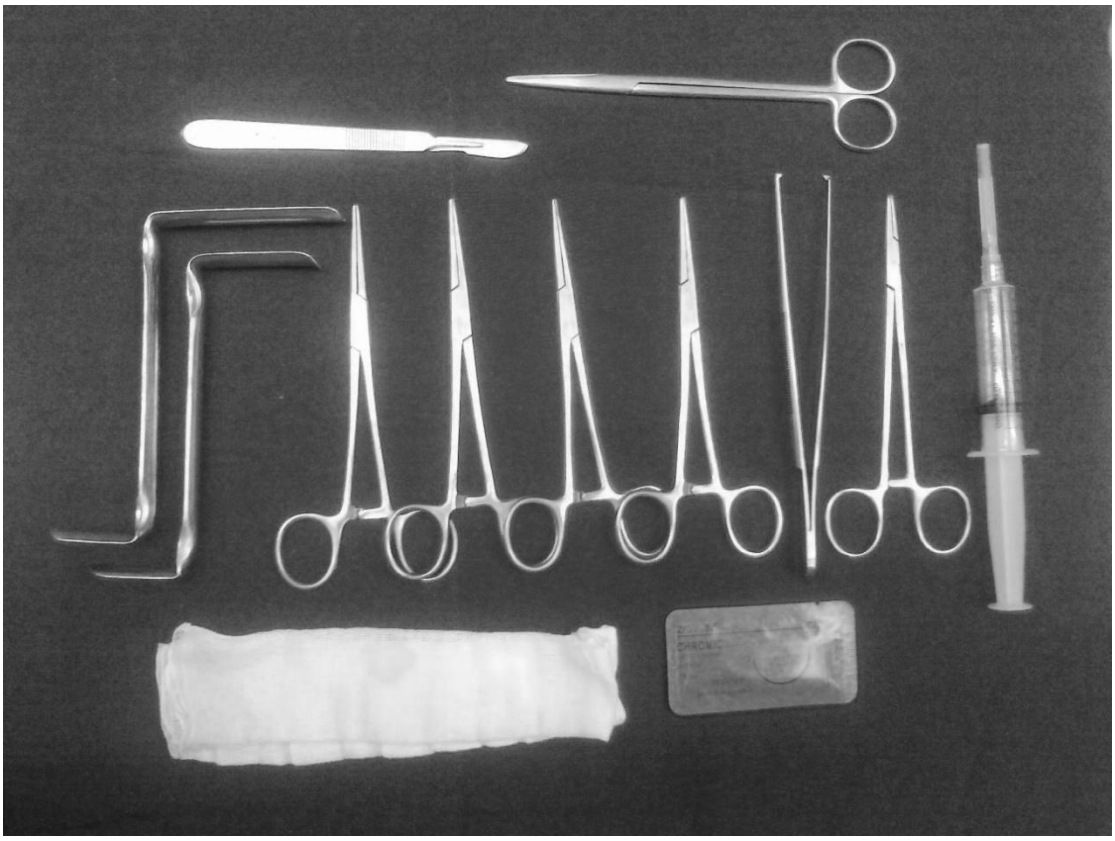

- 1 set of Apelo retractors
- 4 straight Kelly forceps, 8 inches
- Tissue forceps
- Needle holder
- Hypodermic syringe (10 or 20 cc.) with needle
- Blade holder with blade
- Metzenbaum scissors
- Gauze
- Chromic 2-0 atraumatic suture

ANNEX B.

Medical eligibility criteria for contraceptive use

COCs Barrier methods IUDs Fertility awareness-based methods Lactational amenorrhoea Patch Female surgical sterilization Intrauterine devices CICs Coitus interruptus Copper IUD for emergency contraception POCs Patch Male surgical sterilization Ring ECPs

Fourth edition, 2009

A WHO FAMILY PLANNING CORNERSTONE

COCs Barrier methods IUDs Fertility awareness-based methods Lactational amenorrhoea Patch Female surgical sterilization Intrauterine devices CICs Coitus interruptus Copper IUD for emergency contraception POCs Patch Male surgical sterilization Ring ECPs

COCs Barrier methods IUDs Fertility awareness-based methods Lactational amenorrhoea Patch Female surgical sterilization Intrauterine devices CICs Coitus interruptus Copper IUD for emergency contraception POCs Patch Male surgical sterilization Ring ECPs

World Health Organization

SURGICAL STERILIZATION PROCEDURES (STER)

Given that sterilization is a surgical procedure that is intended to be permanent, special care must be taken to assure that every client makes a voluntary informed choice of the method. Particular attention must be given in the case of young people, nulliparous women, men who have not yet been fathers, and clients with mental health problems, including depressive conditions. All clients should be carefully counselled about the intended permanence of sterilization and the availability of alternative, long-term, highly effective methods. This is of extra concern for young people. The national laws and existing norms for the delivery of sterilization procedures must be considered in the decision process.

Transcervical methods of female sterilization are not addressed in these recommendations.

There is no medical condition that would absolutely restrict a person's eligibility for sterilization, although some conditions and circumstances will require that certain precautions are taken, including those where the recommendation is C (caution), D (delay), or S (special). For some of these conditions and circumstances, the theoretical or proven risks may outweigh the advantages of undergoing sterilization, particularly female sterilization. Where the risks of sterilization outweigh the benefits, long-term, highly effective contraceptive methods are a preferable alternative. Decision in this regard will have to be made on an individual basis, considering the risks and benefits of sterilization versus the risks of pregnancy, and the availability and acceptability of highly effective, alternative methods.

The following classification of conditions into the four different categories is based on an in-depth review of the epidemiological and clinical evidence relevant to medical eligibility. Sterilization procedures should only be performed by well-trained providers in appropriate clinical settings using proper equipment and supplies. Appropriate service delivery guidelines, including infection-prevention protocols, should be followed to maximize client safety.

DEFINITIONS

A	Accept	There is no medical reason to deny sterilization to a person with this condition.
C	Caution	The procedure is normally conducted in a routine setting, but with extra preparation and precautions.
D	Delay	The procedure is delayed until the condition is evaluated and/or corrected. Alternative temporary methods of contraception should be provided.
S	Special	The procedure should be undertaken in a setting with an experienced surgeon and staff, equipment needed to provide general anaesthesia, and other back-up medical support. For these conditions, the capacity to decide on the most appropriate procedure and anaesthesia regimen is also needed. Alternative temporary methods of contraception should be provided, if referral is required or there is otherwise any delay.

FEMALE SURGICAL STERILIZATION

Sterilization does not protect against STI/HIV. If there is risk of STI/HIV (including during pregnancy or postpartum), the correct and consistent use of condoms is recommended, either alone or with another contraceptive method. Male latex condoms are proven to protect against STI/HIV.

CONDITION * additional comments at end of table	CATEGORY A = accept C = caution D = delay S = special	CLARIFICATIONS/EVIDENCE
PERSONAL CHARACTERISTICS AND REPRODUCTIVE HISTORY		
PREGNANCY	D	
YOUNG AGE	C	**Clarification**: Young women, like all women, should be counselled about the permanency of sterilization and the availability of alternative, long-term, highly effective methods. **Evidence**: Studies show that up to 20% of women sterilized at a young age later regret this decision, and that young age is one of the strongest predictors of regret (including request for referral information and obtaining reversal) that can be identified before sterilization.(1-19)
PARITY*		
a) Nulliparous	A	
b) Parous	A	
BREASTFEEDING	A	
POSTPARTUM*		
a) < 7 days	A	
7 to < 42 days	D	
≥ 42 days	A	
b) Pre-eclampsia/eclampsia		
(i) mild pre-eclampsia	A	
(ii) severe pre-eclampsia/ eclampsia	D	
c) Prolonged rupture of membranes, 24 hours or more	D	
d) Puerperal sepsis, intrapartum or puerperal fever	D	
e) Severe antepartum or postpartum haemorrhage	D	
f) Severe trauma to the genital tract (cervical or vaginal tear at time of delivery)	D	
g) Uterine rupture or perforation	S	**Clarification**: If exploratory surgery or laparoscopy is conducted and the patient is stable, repair of the problem and tubal sterilization may be performed concurrently if no additional risk is involved.
POST-ABORTION*		
a) Uncomplicated	A	
b) Post-abortal sepsis or fever	D	
c) Severe post-abortal haemorrhage	D	
d) Severe trauma to the genital tract (cervical or vaginal tear at time of abortion)	D	
e) Uterine perforation	S	**Clarification**: If exploratory surgery or laparoscopy is conducted, repair of the problem and tubal sterilization may be performed concurrently if no additional risk is involved.
f) Acute haematometra	D	

Sterilization does not protect against STI/HIV. If there is risk of STI/HIV (including during pregnancy or postpartum), the correct and consistent use of condoms is recommended, either alone or with another contraceptive method. Male latex condoms are proven to protect against STI/HIV.		
CONDITION * additional comments at end of table	**CATEGORY** **A** = accept **C** = caution **D** = delay **S** = special	**CLARIFICATIONS/EVIDENCE**
PAST ECTOPIC PREGNANCY	A	
SMOKING		
a) Age < 35 years	A	
b) Age ≥ 35 years		
(i) < 15 cigarettes/day	A	
ii) ≥ 15 cigarettes/day	A	
OBESITY		**Clarification**: The procedure may be more difficult. There is an increased risk of wound infection and disruption. Obese women may have limited respiratory function and may be more likely to require general anaesthesia. **Evidence**: Women who were obese were more likely to have complications when undergoing sterilization.(20-23)
a) ≥ 30 kg/m^2 BMI	C	
b) Menarche to < 18 years and ≥ 30 kg/m^2 BMI	C	
CARDIOVASCULAR DISEASE		
MULTIPLE RISK FACTORS FOR ARTERIAL CARDIOVASCULAR DISEASE* (such as older age, smoking, diabetes and hypertension)	S	
HYPERTENSION For all categories of hypertension, classifications are based on the assumption that no other risk factors for cardiovascular disease exist. When multiple risk factors do exist, the risk of cardiovascular disease may increase substantially. A single reading of blood pressure level is not sufficient to classify a woman as hypertensive.		
a) Hypertension: adequately controlled	C	
b) Elevated blood pressure levels (properly taken measurements)		**Clarification**: Elevated blood pressure should be controlled before surgery. There are increased anaesthesia-related risks and an increased risk of cardiac arrhythmia with uncontrolled hypertension. Careful monitoring of blood pressure intra-operatively is particularly necessary in this situation.
(i) systolic 140-159 or diastolic 90-99 mm Hg	C	
(ii) systolic ≥160 or diastolic ≥100 mm Hg	S	
c) Vascular disease	S	
HISTORY OF HIGH BLOOD PRESSURE DURING PREGNANCY (where current blood pressure is measurable and normal)	A	
DEEP VENOUS THROMBOSIS (DVT)/ PULMONARY EMBOLISM (PE)		**Clarification**: To reduce the risk of DVT/PE, early ambulation is recommended.
a) History of DVT/PE	A	
b) Acute DVT/PE	D	
c) DVT/PE and established on anticoagulant therapy	S	
d) Family history (first-degree relatives)	A	
e) Major surgery		
(i) with prolonged immobilization	D	
(ii) without prolonged immobilization	A	
f) Minor surgery without immobilization	A	

Sterilization does not protect against STI/HIV. If there is risk of STI/HIV (including during pregnancy or postpartum), the correct and consistent use of condoms is recommended, either alone or with another contraceptive method. Male latex condoms are proven to protect against STI/HIV.		
CONDITION * additional comments at end of table	**CATEGORY** **A** = accept **C** = caution **D** = delay **S** = special	**CLARIFICATIONS/EVIDENCE**
KNOWN THROMBOGENIC MUTATIONS (e.g., factor V Leiden; prothrombin mutation; protein S, protein C, and antithrombin deficiencies)	A	**Clarification**: Routine screening is not appropriate because of the rarity of the conditions and the high cost of screening.
SUPERFICIAL VENOUS THROMBOSIS		
a) Varicose veins	A	
b) Superficial thrombophlebitis	A	
CURRENT AND HISTORY OF ISCHAEMIC HEART DISEASE*		
a) Current ischaemic heart disease	D	
b) History of ischaemic heart disease	C	
STROKE (history of cerebrovascular accident)	C	
KNOWN HYPERLIPIDAEMIAS	A	**Clarification**: Routine screening is not appropriate because of the rarity of the conditions and the high cost of screening.
VALVULAR HEART DISEASE		
a) Uncomplicated	C	**Clarification**: The woman requires prophylactic antibiotics.
b) Complicated (pulmonary hypertension, risk of atrial fibrillation, history of subacute bacterial endocarditis)	S	**Clarification**: The woman is at high risk for complications associated with anaesthesia and surgery. If the woman has atrial fibrillation that has not been successfully managed or current subacute bacterial endocarditis, the procedure should be delayed.
RHEUMATIC DISEASES		
SYSTEMIC LUPUS ERYTHEMATOSUS (SLE) People with SLE are at increased risk of ischaemic heart disease, stroke and venous thromboembolism. Categories assigned to such conditions in the MEC should be the same for women with SLE who present with these conditions. For all categories of SLE, classifications are based on the assumption that no other risk factors for cardiovascular disease are present; these classifications must be modified in the presence of such risk factors. Available evidence indicates that many women with SLE can be considered good candidates for most contraceptive methods, including hormonal contraceptives.(112-130)		
a) Positive (or unknown) antiphospholipid antibodies	S	
b) Severe thrombocytopenia	S	
c) Immunosuppressive treatment	S	
d) None of the above	C	
NEUROLOGIC CONDITIONS		
HEADACHES		
a) Non-migrainous (mild or severe)	A	
b) Migraine		
(i) without aura		
Age < 35 years	A	
Age ≥ 35 years	A	
(ii) with aura, at any age	A	
EPILEPSY	C	

Sterilization does not protect against STI/HIV. If there is risk of STI/HIV (including during pregnancy or postpartum), the correct and consistent use of condoms is recommended, either alone or with another contraceptive method. Male latex condoms are proven to protect against STI/HIV.		
CONDITION * additional comments at end of table	**CATEGORY** **A** = accept **C** = caution **D** = delay **S** = special	**CLARIFICATIONS/EVIDENCE**
DEPRESSIVE DISORDERS		
DEPRESSIVE DISORDERS	C	
REPRODUCTIVE TRACT INFECTIONS AND DISORDERS		
VAGINAL BLEEDING PATTERNS		
a) Irregular pattern without heavy bleeding	A	
b) Heavy or prolonged bleeding (includes regular and irregular patterns)	A	
UNEXPLAINED VAGINAL BLEEDING (suspicious for serious condition)		**Clarification**: The condition must be evaluated before the procedure is performed
Before evaluation	D	
ENDOMETRIOSIS	S	
BENIGN OVARIAN TUMOURS (including cysts)	A	
SEVERE DYSMENORRHOEA	A	
GESTATIONAL TROPHOBLASTIC DISEASE		
a) Decreasing or undetectable β-hCG levels	A	
b) Persistently elevated β-hCG levels or malignant disease	D	
CERVICAL ECTROPION	A	
CERVICAL INTRAEPITHELIAL NEOPLASIA (CIN)	A	
CERVICAL CANCER* (awaiting treatment)	D	
BREAST DISEASE		
a) Undiagnosed mass	A	
b) Benign breast disease	A	
c) Family history of cancer	A	
d) Breast cancer		
(i) current	C	
(ii) past and no evidence of current disease for 5 years	A	
ENDOMETRIAL CANCER*	D	
OVARIAN CANCER*	D	
UTERINE FIBROIDS*		
a) Without distortion of the uterine cavity	C	
b) With distortion of the uterine cavity	C	

Sterilization does not protect against STI/HIV. If there is risk of STI/HIV (including during pregnancy or postpartum), the correct and consistent use of condoms is recommended, either alone or with another contraceptive method. Male latex condoms are proven to protect against STI/HIV.		
CONDITION * additional comments at end of table	**CATEGORY** **A** = accept **C** = caution **D** = delay **S** = special	**CLARIFICATIONS/EVIDENCE**
PELVIC INFLAMMATORY DISEASE (PID)*		
a) Past PID (assuming no current risk factors for STIs)		**Clarification**: A careful pelvic examination must be performed to rule out recurrent or persistent infection and to determine the mobility of the uterus.
(i) with subsequent pregnancy	A	
(ii) without subsequent pregnancy	C	
b) PID - current	D	
STIs*		
a) Current purulent cervicitis or chlamydial infection or gonorrhoea	D	**Clarification**: If no symptoms persist following treatment, sterilization may be performed.
b) Other STIs (excluding HIV and hepatitis)	A	
c) Vaginitis (including trichomonas vaginalis and bacterial vaginosis)	A	
d) Increased risk of STIs	A	
HIV/AIDS		
HIGH RISK OF HIV	A	**Clarification**: No routine screening is needed. Appropriate infection prevention procedures, including universal precautions, must be carefully observed with all surgical procedures. The use of condoms is recommended following sterilization.
HIV-INFECTED	A	**Clarification**: No routine screening is needed. Appropriate infection prevention procedures, including universal precautions, must be carefully observed with all surgical procedures. The use of condoms is recommended following sterilization.
AIDS	S	**Clarification**: The presence of an AIDS-related illness may require that the procedure be delayed.
OTHER INFECTIONS		
SCHISTOSOMIASIS		
a) Uncomplicated	A	
b) Fibrosis of the liver (if severe, see cirrhosis)	C	**Clarification**: Liver function may need to be evaluated.
TUBERCULOSIS		
a) Non-pelvic	A	
b) Pelvic	S	
MALARIA	A	

Sterilization does not protect against STI/HIV. If there is risk of STI/HIV (including during pregnancy or postpartum), the correct and consistent use of condoms is recommended, either alone or with another contraceptive method. Male latex condoms are proven to protect against STI/HIV.		
CONDITION * additional comments at end of table	**CATEGORY** **A** = accept **C** = caution **D** = delay **S** = special	**CLARIFICATIONS/EVIDENCE**
ENDOCRINE CONDITIONS		
DIABETES*		**Clarification:** If blood glucose is not well controlled, referral to a higher-level facility is recommended.
a) History of gestational disease	A	
b) Non-vascular disease		**Clarification:** There is a possible decrease in healing and an increased risk of wound infection. Use of prophylactic antibiotics is recommended. **Evidence**: Diabetic women were more likely to have complications when undergoing sterilization.(22)
(i) non-insulin dependent	C	
(ii) insulin dependent	C	
c) Nephropathy/retinopathy/ neuropathy	S	
d) Other vascular disease or diabetes of > 20 years' duration	S	
THYROID DISORDERS*		
a) Simple goitre	A	
b) Hyperthyroid	S	
c) Hypothyroid	C	
GASTROINTESTINAL CONDITIONS		
GALL BLADDER DISEASE		
a) Symptomatic		
(i) treated by cholecystectomy	A	
(ii) medically treated	A	
(iii) current	D	
b) Asymptomatic	A	
HISTORY OF CHOLESTASIS		
a) Pregnancy related	A	
b) Past-COC related	A	
VIRAL HEPATITIS*		**Clarification:** Appropriate infection-prevention procedures, including universal precautions, must be carefully observed with all surgical procedures.
a) Acute or flare	D	
b) Carrier	A	
c) Chronic	A	
CIRRHOSIS		**Clarification:** Liver function and clotting might be altered. Liver function should be evaluated.
a) Mild (compensated)	A	
b) Severe (decompensated)	S	
LIVER TUMOURS		**Clarification:** Liver function and clotting might be altered. Liver function should be evaluated.
a) Benign		
(i) Focal nodular hyperplasia	A	
(ii) Hepatocellular adenoma	C	
b) Malignant (hepatoma)	C	

Sterilization does not protect against STI/HIV. If there is risk of STI/HIV (including during pregnancy or postpartum), the correct and consistent use of condoms is recommended, either alone or with another contraceptive method. Male latex condoms are proven to protect against STI/HIV.		
CONDITION * additional comments at end of table	**CATEGORY** **A** = accept **C** = caution **D** = delay **S** = special	**CLARIFICATIONS/EVIDENCE**
ANAEMIAS		
THALASSAEMIA	C	
SICKLE CELL DISEASE*	C	
IRON-DEFICIENCY ANAEMIA a) Hb < 7g/dl a) Hb ≥ 7 to < 10g/dl	 D C	**Clarification**: The underlying disease should be identified. Both preoperative haemoglobin (Hb) level and operative blood loss are important factors in women with anaemia. If peripheral perfusion is inadequate, this may decrease wound healing.
OTHER CONDITIONS RELEVANT ONLY FOR FEMALE SURGICAL STERILIZATION		
LOCAL INFECTION	D	**Clarification**: There is an increased risk of postoperative infection.
COAGULATION DISORDERS*	S	
RESPIRATORY DISEASES a) Acute (bronchitis, pneumonia) b) Chronic (i) asthma (ii) bronchitis (iii) emphysema (iv) lung infection	 D S S S S	**Clarification**: The procedure should be delayed until the condition is corrected. There are increases in anaesthesia-related and other perioperative risks.
SYSTEMIC INFECTION OR GASTROENTERITIS*	D	
FIXED UTERUS DUE TO PREVIOUS SURGERY OR INFECTION*	S	
ABDOMINAL WALL OR UMBILICAL HERNIA	S	**Clarification**: Hernia repair and tubal sterilization should be performed concurrently if possible.
DIAPHRAGMATIC HERNIA*	C	
KIDNEY DISEASE*	C	
SEVERE NUTRITIONAL DEFICIENCIES*	C	
PREVIOUS ABDOMINAL OR PELVIC SURGERY	C	**Evidence**: Women with previous abdominal or pelvic surgery were more likely to have complications when undergoing sterilization. (21;22;24-26)
STERILIZATION CONCURRENT WITH ABDOMINAL SURGERY a) Elective b) Emergency (without previous counselling) c) Infectious condition	 C D D	
STERILIZATION CONCURRENT WITH CAESAREAN SECTION*	A	

ANNEX C.
Performance Checklist on MLLA

Place a **(√)**in case box if step/task is performed **satisfactorily**, an **(X)** if it is **not** performed **satisfactorily**, or **N/O** if not observed.

Satisfactory: Performs the step or task according to standard procedure or guidelines

Unsatisfactory: Does not perform the step or task according to standard procedure or guidelines

Not Observed: Step or task not performed by participant during evaluation by trainer

PARTICIPANT_____ **Course Dates**_____

SUPRAPUBIC MINILAPAROTOMY					
TASK/ACTIVITY	**CASES**				
PRE-OPERATIVE					
1. Verifies client's identity.					
2. Reviews client history and physical examination to assure proper client selection.					
3. Checks informed decision making and informed consent obtained verifies voluntarism.					
4. Ensures that client has emptied her bladder before entering the operating room.					
5. Ensures that needed instruments are available and properly processed.					
6. Ensures that needed medications/drugs for the procedure and for possible emergency are available.					
7. Ensures that intravenous line is properly inserted by the circulating nurse.					
8. Positions client in dorsal lithotomy position.					
9. Washes hands with soap and water.					
10. Puts on HLD or sterile gloves.					
11. Swabs the perineal area with povidone solution assisted by the circulating nurse.					
12. Performs a gentle bimanual examination to assess uterine size, position and mobility, and the presence of any pelvic pathology.					
13. Inserts the vaginal speculum.					

SUPRAPUBIC MINILAPAROTOMY					
TASK/ACTIVITY	**CASES**				
14. Checks for abnormalities of the cervix (e.g., erosions, mass, discharge).					
15. Swabs the cervix with povidone.					
16. Gently inserts the uterine elevator into the uterus without touching the vaginal walls.					
17. Repositions client into dorsal supine position with knees bent.					
18. Instructs circulating nurse to administer Meperidine 50 mg. by slow IV and Diazepam 5 mg. initially and add 5 mg. if client is observed to be anxious.					
19. Performs surgical scrub and puts on surgical garments and sterile gloves.					
20. Checks that the abdomen has been appropriately prepared.					
21. Creates a sterile field by draping the client.					
INFILTRATION OF LOCAL ANESTHESIA					
22. Checks that the uterine elevator is in place by depressing it and noting the bulge created on the abdomen by the uterine fundus.					
23. Chooses the incision site as two fingerbreadths (2-3 cm.)from the anterior border of the symphysis pubis.					
24. Infiltrates the abdominal wall (using the fan-shaped technique) with 10 cc. 2%lidocaine or 20 cc. 1%lidocaine.					
25. Checks for effective anesthesia block by pinching with tissue forceps the intended incision site.					
ENTERING THE ABDOMEN					
26. Pulls the skin taut to make a transverse incision approximately 2-3 cm in length.					
27. Dissects the subcutaneous layer bluntly with Kelly forceps or retractors until the anterior rectus fascia is visualized and exposed. Maintains midline dissection.					
28. Instructs the assistant to retract so that the fascia is exposed and visualized.					
29. Incises the fascia creating a vertical slit through the whole thickness of the fascia.					
30. Grasps the edges of the slit with Kelly or Allis forceps.					
31. Instructs the assistant to hold the Kelly forcep on his/her side and gently lifting this upward.					
32. Dissects the muscles beneath the fascia using Mayo scissors.					

SUPRAPUBIC MINILAPAROTOMY					
TASK/ACTIVITY	**CASES**				
33. Extends the fascial incision vertically.					
34. Bluntly separates the rectus muscle vertically at the midline (linea alba)					
35. Removes the Kelly forceps holding the fascia.					
36. Repositions the retractors into the incision to expose the preperitoneal fat.					
37. If there is too much preperitoneal fat, does blunt dissection to expose the peritoneum.					
38. Instructs the circulating nurse to put the table in slight Trendelenburgh position.					
39. Elevates the peritoneum by grasping it at 2 points 1-2 cm apart with hemostats.					
40. Hands over one forcep to assistant and instructs him/her to gently lift the peritoneum.					
41. Checks that the bowels, omentum, or bladder have not been grasped inadvertently with the peritoneum by checking translucency and thinness.					
42. Opens the peritoneum and repositions the retractors inside the abdominal cavity.					
DELIVERY AND OCCLUSION OF THE FALLOPIAN TUBES					
43. Depresses the uterine elevator to raise the uterine fundus close to the incision.					
44. Feels for the fundus with the use of the blades of the retractors.					
45. Once the fundus is bumped by the retractors, moves out the omentum or bowels covering the fundus.					
46. Once the uterus is visualized, instructs the assistant to hold the retractors and move them to the side of the tube that is being accessed.					
47. While directly viewing the uterine fundus, gently rotates the handle of the uterine elevator in the opposite direction of the tube being accessed.					
48. Grasps the tube with Kelly forceps held by the free hand. Lets go of the uterine elevator at this point.					
49. Pulls the tube further and "walks through" it until the fimbrial end is identified. Do not lock the forceps as this is done.					
50. Identifies an avascular area of the tube and clamps with Kelly					

SUPRAPUBIC MINILAPAROTOMY					
TASK/ACTIVITY	**CASES**				
forcep.					
51. Instructs assistant to hold the Kelly holding the tube upward.					
52. Creates a 1-2 cm. loop of tube.					
53. Ties the loop of tube tightly and with a surgical knot.					
54. Excises the tube above the knot leaving at least 0.5 cm tubal stump.					
55. Examines the tubal stump for bleeding.					
56. Cuts the suture above the knot so that the tube returns to the abdomen.					
Repeats the tasks for "Delivery and Occlusion of the Tubes" to identify and occlude the other fallopian tube.					
57. Instructs the circulating nurse to return the position of the surgical table from Trendelenburgh to its normal horizontal position.					
CLOSING THE ABDOMEN					
58. Grasps both sides of the fascia with forceps.					
59. Instructs the assistant to expose the fascia using the retractors.					
60. Closes the fascia with continuous interlock sutures starting from one end.					
61. Closes the skin with subcuticular sutures.					
POST-OPERATIVE					
62. Dresses the wound.					
63. Removes the uterine elevator and puts it in a container with 0.5% chlorine solution.					
64. Places all used instruments in 0.5% chlorine solution.					
65. Immerses gloved hand in chlorine solution, removes gloves inside out, and immerses these in chlorine solution.					
66. Helps the client off the operating table and ensures that she is appropriately escorted to the recovery room.					
67. Washes hands with soap and water.					

SUBUMBILICAL MINILAPAROTOMY					
TASK/ACTIVITY	**CASES**				
PRE-OPERATIVE					
1. Verifies client's identity.					
2. Reviews client history and physical examination to ensure that there have not been complications during labor and delivery that could adversely affect the procedure.					
3. Determines the condition of the infant.					
4. Checks informed decision making and informed consent obtained. Verifies voluntarism.					
5. Ensures that the client has emptied her bladder before entering the operating room.					
6. Ensures that needed instruments are available and properly processed.					
7. Ensures that needed medications/drugs for the procedure and for possible emergency are available.					
8. Ensures that intravenous line is properly inserted by the circulating nurse.					
9. Positions client in dorsal supine position.					
10. Washes hands with soap and water.					
11. Performs abdominal examination to determine level of the uterus.					
12. Instructs circulating nurse to administer Meperidine 50 mg. by slow IV and Diazepam 5 mg. initially and add 5 mg. if client is observed to be anxious.					
13. Performs surgical scrub and puts on surgical garments and sterile gloves.					
14. Checks that the abdomen has been appropriately prepared.					
15. Creates a sterile field by draping the client.					
INFILTRATION OF LOCAL ANESTHESIA					
16. Chooses the incision site as just below the umbilicus.					
17. Infiltrates the abdominal wall (using the fan-shaped technique) with 10 cc. 2%lidocaine or 20 cc. 1%lidocaine.					
18. Checks for effective anesthesia block by pinching with tissue forceps the subumbilical area.					
ENTERING THE ABDOMEN					
19. Pulls the skin taut to make a transverse incision approximately 2-3 cm. in length beneath the umbilicus.					

SUBUMBILICAL MINILAPAROTOMY					
20. Dissects the subcutaneous layer bluntly with Kelly forceps or retractors until the anterior rectus fascia is visualized and exposed. Maintains midline dissection.					
21. Instructs assistant appropriately to expose the operative field.					
22. Incises the fascia creating a transverse slit through the whole thickness of the fascia.					
23. Grasps the edges of the slit with Kelly or Allis forceps.					
24. Lifts the fascia while extending the incision transversely.					
25. Elevates the peritoneum by grasping it at 2 points 1-2 cm. apart with hemostats.					
26. Checks that the bowels, omentum, or bladder have not been grasped inadvertently with the peritoneum by checking translucency and thinness.					
27. Opens the peritoneum and repositions the retractors inside the abdominal cavity.					
DELIVERY AND OCCLUSION OF THE FALLOPIAN TUBES					
28. Pushes the uterus toward the opposite side of the tube being accessed.					
29. Gently moves the incision to the tube that is being accessed with the assistant following the direction of the surgeon using the other retractor.					
30. Clears out the omentum or bowels covering the fundus.					
31. Grasps the tube with Kelly forceps.					
32. Pulls the tube further and "walks through" it until the fimbrial end is identified. Does not lock the forceps as this is done.					
33. Creates a 1-2 cm. loop of tube.					
34. Ties the loop of tube tightly and with a surgical knot while the assistant holds the Kelly with the tube.					
35. Holds the sutures with forceps.					
36. Excises the tube above the knot leaving at least 0.5 cm. tubal stump.					
37. Examines the tubal stump for bleeding.					
38. Cuts the suture above the knot so that the tube returns to the abdomen.					

SUBUMBILICAL MINILAPAROTOMY					
Repeats the tasks for "Delivery and Occlusion of the Tubes" to identify and occlude the other fallopian tube.					
39. Instructs the circulating nurse to return the position of the surgical table from Trendelenburg to its normal horizontal position.					
CLOSING THE ABDOMEN					
40. Grasps both sides of the fascia with forceps.					
41. Closes the fascia with continuous interlock sutures starting from one end.					
42. Closes the skin with interrupted sutures.					
POST-OPERATIVE					
43. Dresses the wound.					
44. Places all used instruments in 0.5% chlorine solution.					
45. Immerses gloved hand in chlorine solution, removes gloves inside out, and immerses these in chlorine solution.					
46. Helps the client off the operating table and ensures that she is appropriately escorted to the recovery room.					
47. Washes hands with soap and water.					

ANNEX D.
Checklist on MLLA Service Requirements (Self-Assessment)

Instruction: Place a **(√)** in the adjacent box if the requirement is presently available in your facility and an **(X)** if it is **not.**

A. FACILITY	
The facility is adequately equipped and supplied as it has the following:	
1. Signage that informs clients of services, including FP, provided at the clinic and clinic hours.	
2. Clean and well ventilated client areas free from garbage, pests and insects.	
3. Waiting area with seats for clients.	
4. All-methods poster displayed in an area where clients can see.	
5. IEC materials available and are being used.	
6. An area for consultation and counseling that: • has a table and chairs.	
• provides auditory and visual privacy.	
• has an examination table with Kelly pad.	
• has sink with running water, liquid or bar soap, and clean, dry towel for washing and drying hands.	
• has locked storage for medicines and supplies.	
• has locked filing cabinet to keep clients' records.	
7. Temporary methods available as possible alternatives to sterilization.	
8. Has enough instruments for MLLA: • Ramathibodi uterine elevator	
• Gauze	
• Metal cup with antiseptic (Betadine)	
• Sponge forceps	
• Graves speculum	
• Straight Kelly forceps, 8 inches	
• Sets of Apelo retractors	
• Tissue forceps	
• Needle holder	
• Hypodermic syringe (10 or 20 cc.) with needle	
• Blade holder with blade	
• Metzenbaum scissors	

• Gauze	
• Chromic 2-0 atraumatic suture	
9. Has materials, supplies and drugs for IV infusion, sedation, and analgesia.	
10. Basic emergency equipment and instruments available and functional. • Battery-operated back-up light source	
• Stethoscope	
• Sphygmomanometer	
• Oral airways	
• Nasal airways	
• Suction machine with tubing	
• Ambubag	
• Anesthesia face mask and tubing and oxygen nipple	
• Oxygen tank with reducing valve and flowmeter	
• Blanket	
• Emesis basin	
• Syringes and needles	
• Intravenous infusion sets and fluids	
• Adhesive strapping	
• Sterile laparotomy instruments	
• Laryngoscope	
• Endotracheal tubes	
11. Basic emergency drugs available. • Adrenalin	
• Atropine sulphate	
• Naloxone	
• Corticosteroids	
• Physostigmine or Flumazenil	
• Aminophylline	
• Antihistamine	
• Diazepam	
12. Has provisions for infection prevention such as: • functional autoclave	

• gloves (i.e., utility, examination, and sterile)	
• antiseptics (i.e., isopropyl 70% alcohol, Betadine)	
• bleach for preparing 0.5% decontaminating solution	
• detergent	
• plastic containers for soaking and cleaning used instruments.	
• covered waste baskets lined with appropriate color coded plastic bags in client areas (i.e., waiting area, consultation room)	
• work area for cleaning instruments, Kelly pad, and mop.	
• area for storing sterile instruments and supplies	
• access to potable water.	
• color-coded garbage containers for different types of wastes ✓ Black plastic lining for general, dry, non-infectious waste ✓ Green plastic lining for general, wet, non-infectious waste ✓ Yellow for infectious/pathological waste	
• container for sharps.	
• mops and rags	
13. Has an area for interim storage of waste that is minimally accessible to staff, clients, and visitors.	
B. STAFFING	
1. Available trained FP counselor(s) providing regular FP counseling activities.	
2. Staff for safe provision of MLLA services: • Trained surgeon • Surgical assistant • Circulating nurse • Client monitor	
3. Support staff skillful in managing emergencies available.	
4. Staff skillful in CPR available.	
5. Competent staff for MLLA follow-up visit available.	
C. INFECTION PREVENTION PRACTICE	
1. Cleanliness observed at OR and clinic.	
2. Restricted areas and OR policies observed.	
3. Decontamination with Chlorine solution is practiced.	
4. Adequate processing of instruments practiced.	

5. Appropriate asepsis and antisepsis procedures practiced for clients and surgical team.	
6. Proper storage of sterile instruments, gowns, linens.	
7. Appropriate waste disposal practices implemented (e.g., use of separate sharps containers and clinic wastes)	
D. FORMS, RECORDS and REPORTS	
1. The following forms available: • FP Form 1 • Informed Consent Form • Operative Record • Post-operative instructions form	
2. Good system of keeping clients' records on file.	
3. System for submission of FP caseload to the PHO established.	