XN-ABC-550-13

depth. Under Condition 3, a change in water depth did not affect sensitivity to NH_3 loss. Under this condition, a high pH, temperature, and wind speed caused high NH_3 loss; an increase in water depth did not affect the NH_3 loss.

The sensitivity of NH_3 loss as a function of wind speed depends on the other conditions of the system. Under Condition 1, sensitivity increased until a wind speed of 7 m s^{-1} was reached, and then decreased. Because the pH and temperature were relatively low under Condition 1, NH_3(aq) concentration in floodwater was also low. An increase in wind speed, however, caused an increase in k_{vN}, thereby increasing sensitivity. An increase in wind speed beyond 7 m s^{-1}, however, decreased sensitivity due to the limitation of NH_4 concentration in the floodwater. Under Conditions 2 and 3, an increase in wind speed decreased the sensitivity of NH_3 loss. These conditions, i.e., high pH and high temperature, provide more NH_3(aq) to the floodwater. Even at low wind speeds, the k_{vN} is sufficient to bring more NH_3(aq) into the atmosphere; therefore, sensitivity is high at low wind speeds. Under Condition 3, an increase in wind speed beyond 7 m s^{-1} did not affect percent NH_3 loss. This was due to the limitation of NH_4 concentration in the floodwater.

Under all conditions, pH was the most sensitive variable, temperature was least sensitive under Conditions 1 and 2, and water depth showed the least sensitivity under Condition 3 (Fig. 3).

The sensitivity analysis shows that it is not possible to generalize on the effect of one variable without considering the other existing conditions. Therefore, the magnitude of NH_3 loss from floodwater can be predicted only by taking into account simultaneously all five primary factors (Jayaweera and Mikkelsen, 1990) that determine the NH_3(aq) concentration and the k_{vN}.

ACKNOWLEDGMENTS

Appreciation is expressed to the William G. and Kathleen H. Golden Fellowship Fund and US-AID Grant no. DAN-1406-G-SS-4079-00 for partial financial support. Thanks is given to Prof. K.T. Paw U. for his technical advice.

REFERENCES

Fillery, I.R.P., and P.L.G. Vlek. 1986. Reappraisal of the significance of ammonia volatilization as an N loss mechanism in flooded rice fields. Fert. Res. 9:79–98.

Jayaweera, G.R., and D.S. Mikkelsen. 1990. Ammonia volatilization from flooded soil systems: A computer model. I. Theoretical aspects. Soil Sci. Soc. Am. J. 54:1447–1455 (this issue).

Vlek, P.L.G., and J.M. Stumpe. 1978. Effects of solution chemistry and environmental conditions on ammonia volatilization losses from aqueous systems. Soil Sci. Soc. Am. J. 42:416–421.

Vlek, P.L.G., and E.T. Craswell. 1979. Effect of nitrogen source and management on ammonia volatilization losses from flooded rice-soil systems. Soil Sci. Soc. Am. J. 43:352–358.

Ammonia Volatilization from Flooded Soil Systems: A Computer Model. III. Validation of the Model

G. R. Jayaweera,* D. S. Mikkelsen, and K. T. Paw U.

ABSTRACT

An NH_3-volatilization model predicting NH_3 loss as a function of five input variables was validated using a wind tunnel to simulate rice paddy conditions and direct field experiments. A total of five variables in a central composite statistical design were compared to study the interactive effects of NH_4-N concentration, pH, temperature, wind speed, and water depth. Experiments were also conducted in a flooded rice field with polypropylene basins placed at water level. Samples were collected every hour for determination of NH_4-N concentration. Temperature, pH, and wind speed were recorded continuously, and water depth was constant. Wind-tunnel data showed that the model predicted observed values with excellent accuracy in the range of conditions found in flooded rice systems. The regression of predicted NH_3 loss on observed losses resulted in an r^2 of 0.98 and a regression slope of 0.99. Field experiments also showed very close agreement between predicted and experimental values with 6-, 12-, and 24-h averages of pH, temperature, and wind speed. The model validation confirmed the theory that NH_3 volatilization is a function of NH_3(aq) concentration and the volatilization rate constant for NH_3, which are dependent on five variables: floodwater NH_4 concentration, pH, temperature, water depth, and wind speed. The model is theoretically sound and predicts NH_3 loss with a high level of accuracy using a menu-driven computer program with easily measurable variables, and can be used in comparison studies of NH_3 loss at the same site.

AMMONIA VOLATILIZATION is a complex process wherein NH_3 gas present in floodwater is transferred across the air-water interface to the atmosphere. Ammonia volatilization can be an important mechanism of N-fertilizer loss in flooded rice production and may account for losses up to 50% of the N applied (Fillery and Vlek, 1986). A computer model has been developed to predict NH_3 loss from a flooded system as a function of several floodwater variables and wind speed (Jayaweera and Mikkelsen, 1990a,b). The model described can be executed with five input variables: NH_4-N concentration, pH, temperature, depth of floodwater, and wind speed at a known height. The model was validated through experiments conducted in a wind tunnel and in the field.

MATERIALS AND METHODS

Wind-Tunnel Experiment

There were a total of 13 wind-tunnel runs to determine the effect of five composite combinations of variables on NH_3 volatilization. A central composite statistical design in-

G.R. Jayaweera and K.T. Paw U., Dep. of Land, Air, and Water Resources, Univ. of California, Davis, CA 95616; D.S. Mikkelsen, Dep. of Agronomy and Range Science, Univ. of California, Davis. Contribution from the Dep. of Agronomy and Range Science and the Dep. of Land, Air, and Water Resources, Univ. of California, Davis. Received 17 Jan. 1989. *Corresponding author.

Published in Soil Sci. Soc. Am. J. 54:1462–1468 (1990).

16

volving mean values as well as maximum and minimum values of each variable was used as described in Table 1.

The wind-tunnel experiments were carried out in the Hydraulic Laboratory wind tunnel at the University of California, Davis. This is a U-shaped, open-end wind tunnel where wind is driven by a propeller fan at the inlet of the tunnel. Air is taken into the tunnel, passed through several vanes and screens, and then over the water surface in the test section.

The wind-tunnel test section (Fig. 1) included a metal tank (245 by 61 by 22 cm) imbedded in the section floor. The depth of the tank for different runs was adjusted with foam plastic inserts placed under polyethylene film. A solution of $(NH_4)_2SO_4$ of varied concentrations (from 25 to 100 mg L^{-1}

Table 1. Experimental details, friction speed (U_*), roughness height (Z_0), equivalent field wind speed at 8-m height (U_8), and observed and predicted NH_3 loss for wind-tunnel runs.

Wind tunnel run	Description (variable)	Initial NH_4-N conc.	pH	Temperature	Water depth	Free-stream wind speed	U_*	Z_0	U_8	NH_3 loss Observed	NH_3 loss Predicted	Predicted/Observed ratio
		mg L^{-1}		°C	cm	m s^{-1}	m s^{-1}	cm	m s^{-1}	mg L^{-1}	mg L^{-1}	
1	Mean	52.32	8.5	25	11.0	2.88	0.166	0.014	4.41	8.33	9.52	1.14
2	Mean	52.59	8.5	25	11.0	2.76	0.150	0.008	4.23	8.32	9.06	1.09
3	Mean	53.22	8.5	25	11.0	2.70	0.144	0.007	4.14	7.91	8.93	1.13
	NH_4-N conc.											
4	Low	26.24	8.5	25	11.0	2.64	0.128	0.003	4.05	3.49	4.27	1.22
5	High	102.54	8.5	25	11.0	2.70	0.140	0.006	4.14	24.77	49.79	2.01
	pH											
6	Low	52.69	6.5	25	11.0	2.64	0.149	0.010	4.05	1.83	0.09	0.05
7	High	49.79	10.5	25	11.0	2.88	0.131	0.002	4.41	24.77	49.79	2.01
	Temperature											
8	Low	52.50	8.5	25	11.0	2.70	0.123	0.002	4.14	5.52	6.21	1.13
9	High	53.05	8.5	30	11.0	2.88	0.136	0.003	4.41	11.83	13.30	1.12
	Water depth											
10	Low	52.67	8.5	25	6.42	2.76	0.158	0.012	4.23	14.59	14.58	1.00
11	High	50.32	8.5	25	21.28	2.76	0.158	0.012	4.23	4.52	4.68	1.04
	Wind speed at 8 m											
12	Low	51.61	8.5	25	11.0	1.91	0.281	0.019	2.93	6.45	5.72	0.89
13	High	52.93	8.5	25	11.0	5.34	0.153	0.005	8.19	12.22	22.25	1.82

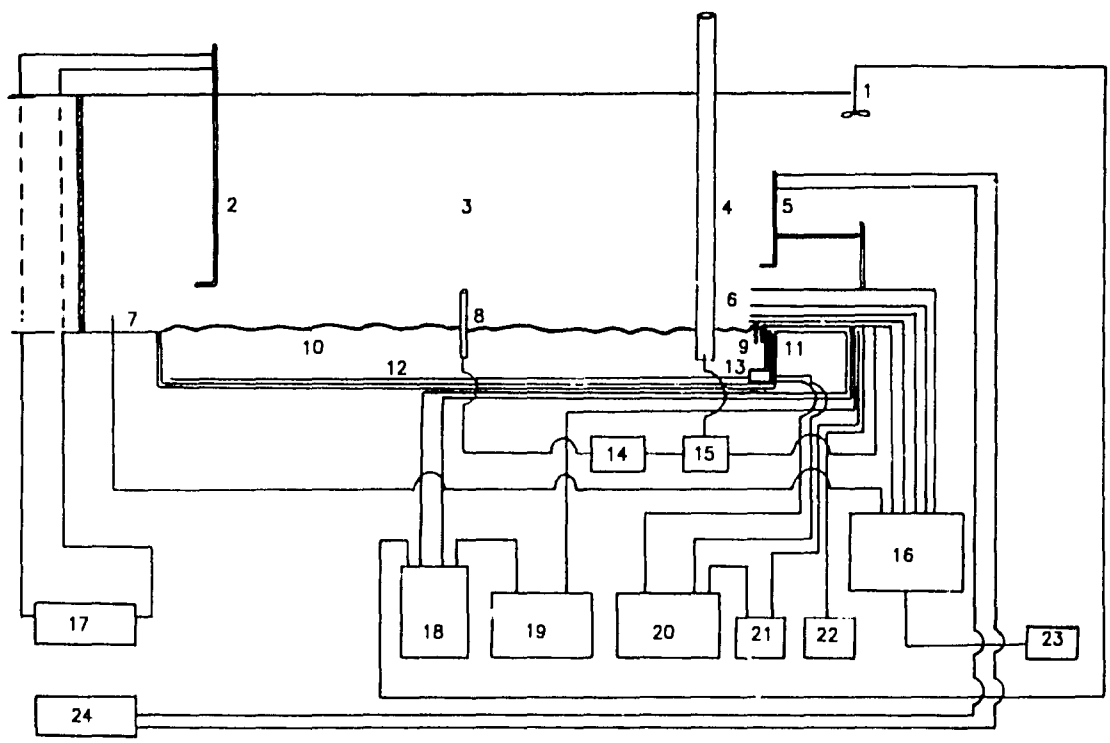

1. Anemometer
2. Pitot tube (upwind)
3. Test section
4. Water reservoir
5. Pitot tube (downwind)
6. Gas sampling ports (downwind)
7. Gas sampling port (upwind)
8. Level sensor (infrared)
9. pH, temperature probes, and solution sampling port
10. Test solution
11. Wave absorber
12. Solution distributing tubes
13. Circulating pumps
14. Level sensor controller
15. Solenoid valve
16. Gas collection system
17. Manometer (upwind pitot tube)
18. Data logger
19. Auto sampler
20. Heating/cooling system
21. Temperature controller
22. Automatic burette
23. Suction pump
24. Manometer (downwind pitot tube)

Fig. 1. Schematic view of wind-tunnel test section.

for different runs) was placed in the tank lined with 5-mil (0.127-mm) polyethylene plastic. The tank water level was maintained by a constant-level device using an infrared level sensor, activating a solenoid valve, to transfer water from a reservoir. This device was also used to determine the total amount of water lost. The solution in the tank was well mixed and maintained at a constant temperature by circulating the solution with three pumps, each at a rate of 20 L min^{-1}, through plastic coils placed in a heating/cooling bath and then back through three perforated submerged tubes extending over the entire length of the tank. The heating/cooling system was connected to a temperature-control unit (YSI Model 71A; Yellow Springs Instrument Co., Yellow Springs, CO), and regulated by a thermistor probe placed in the solution. The heating was done with six 1000-W heating elements and cooling was controlled by two Blue M portable cooling units (Model PCC-24A-2, Blue M Equipment, Blue Island, IL). The pH of the tank solution was maintained at a constant value by titrating acid or base with an automatic burette.

Wind-speed profiles were measured at the upwind and downwind end of the test section by two pitot tubes of Prandtl design, mounted on a vertical traversing mechanism. The wind measurements were taken at 1-, 2-, 4-, 8-, and 16-cm heights. A wave absorber was fixed at the downwind end of the tank to dissipate wave energy and minimize reflection. Wet- and dry-bulb temperatures were measured by thermistor probes (Campbell Scientific Model 101, Logan, UT) at two heights at the downwind end of the tank and at the inlet to the wind tunnel, and recorded in a data logger (Campbell Scientific Model CR21).

Each wind-tunnel run was conducted over a 6-h time period. Ammonical-N concentration, pH, temperature, and wind velocity were monitored over the course of the experiment. Ammoniacal-N concentration was measured by sampling the tank solution every 20 min using a custom-built autosampler device. Samples of approximately 7 mL were collected at the downwind end of the tank through a thin nylon plastic tube with the tip protected to prevent any particles from blocking the sampling tube. Vacutainers (Monoject, Sherwood Medical, St. Louis, MO) of 7-mL capacity placed in a rotating tray were pierced by a needle connected to the sampling tube and the sample was pulled into the Vacutainer by suction.

Solution pH, temperature, and wind speed were recorded continuously during the wind-tunnel run with a four-channel data logger (Rustrak-Ranger, Gulton Industries, East Greenwich, RI). The pH was measured with a combination pH electrode, and temperature was measured with a glass-covered thermistor probe in the solution (0–1-cm depth) at the downwind end of the tank. Wind speed was measured by a cup anemometer (Met-one 014 A, Campbell Scientific) placed at the downwind end of the tunnel. The pH electrode, thermistor probe, and the anemometer were interfaced with the data logger through a custom-built pH meter and pod types POD-03 and POD-24 (Gulton, Graphic Instruments), respectively. The time of solution sampling was recorded in the fourth channel of the data logger. The data logger was downloaded at the end of each wind-tunnel run to an IBM PC-type computer.

Air samples were drawn at 1-, 2-, 4-, 8-, and 16-cm heights above the water surface at 30 cm from the downwind end of the tank and also at the upwind end as the control throughout the experiment. These samples were drawn by a suction pump at a rate of approximately 1 L min^{-1} (the exact value was found by calibration through a flowmeter with a control valve and a solution trap of 30 mL 0.1 M H_2SO_4).

Tank-solution samples were collected (nine samples collected at different places and averaged) from the tank just before and after each experimental run. Autosampler-collected samples for NH_4–N analyses were immediately acidified and analyzed along with H_2SO_4 air-collection-trap samples by high-pressure liquid chromatography (Abshahi et al., 1988).

Field Experiment

The field experiment was conducted at the Rice Research Facility of the University of California, Davis. Circular polypropylene basins of 105-cm diameter and 15-cm depth were placed in duplicate in a flooded field so that the edge of each basin was just above the floodwater surface. One hundred and twenty liters of $(NH_4)_2SO_4$ solutions (NH_4–N concentration: 50 mg L^{-1}) were placed in each pan and exposed to the natural conditions found in a rice field.

Solution NH_4–N concentration, pH, temperature, and wind speed were measured as illustrated in the diagrammatic representation of the experimental setup (Fig. 2). Ammonium-N concentration in the water basin was monitored by sampling every hour using a custom-built battery-operated autosampler. A Rustrak-Ranger datalogger recorded the time of sampling, pH, temperature (0–1-cm depth), and wind speed at 2 m above the water surface using the instruments described above. The evaporative losses were adjusted for periodically with distilled water and the basin solution level was maintained at 15-cm depth throughout the experiment by a conductivity device that gave an audible signal when the water level reached the probe.

Solution samples were acidified and NH_4–N concentrations were determined by high-pressure liquid chromatography (Abshahi et al., 1988). The data logger was downloaded periodically to an IBM PC-type computer.

RESULTS AND DISCUSSION

Wind-Tunnel Validation

Wind-speed profiles, taken at the downwind and upwind end of the test section, showed no significant

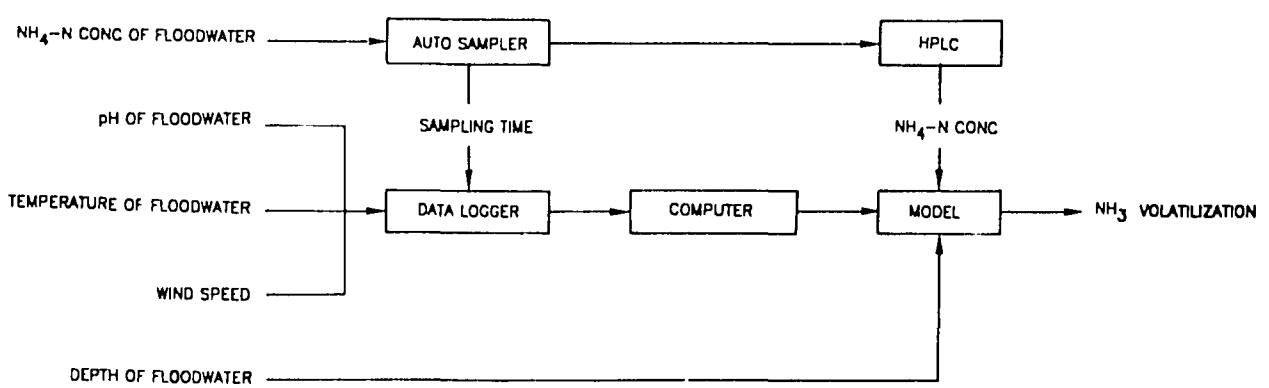

Fig. 2. Diagrammatic representation of the experimental setup.

difference; therefore, all the wind calculations used the wind profiles from the downwind end. A typical wind-speed profile is shown in Fig. 3. In all the wind-tunnel runs, a vertical mean logarithmic speed profile was assumed:

$$U_Z = (U_*/k)\ln(Z/Z_o) \quad [1]$$

where
U_Z = the wind velocity at height Z,
U_* = the friction velocity,
k = the Von-Karman constant, 0.4, and
Z_o = the roughness height.

Extrapolation of the wind-tunnel results to the processes occurring in a natural environment is possible if characteristics of the vertical wind profile are known. Therefore, we transformed Eq. [1] to a linear form as

$$\ln Z = (k/U_*)U_Z + \ln Z_o \quad [2]$$

Using Eq. [2], U_* and Z_o were computed. A typical plot obtained after logarithmic transformation is shown in Fig. 4. The average r^2 value of regression for all the wind-tunnel runs was 0.98 with the data points in a straight line, which implied that the wind-tunnel boundary layer was well developed in all experimental runs. Calculated friction velocities and roughness lengths are shown in Table 1. Overall in the wind-tunnel runs, the mean value of Z_o is 0.008 cm, which compares well with other data (0.007 cm) for air flow over water surfaces (Liss, 1973). These values fall well within the range found in other air-sea interface research (Smith, 1970). The ratio of U_*/U_x was fairly constant over all the wind-tunnel runs with an average of 0.0531, where U_x is the wind speed in the axial center of the wind tunnel:

$$U_*/U_x = 0.0531 \quad [3]$$

The following relationship has developed between the wind speed at 8-m height, U_8, and U_* (Jayaweera and Mikkelsen, 1990a).

$$U_8 = 28.7823U_* \quad [4]$$

By combining Eq. [3] and [4], the free-stream speed of the wind tunnel can be converted to the equivalent field wind speed at a height of 8 m:

$$U_8 = 1.5283U_x. \quad [5]$$

Using Eq. [5], the free-stream wind speeds of different runs in the wind tunnel were transformed into equivalent 8-m-height field wind speeds as shown in Table 1. This calculated field wind speed was used as an input in the model.

The solution samples collected every 20 min during a 6-h period in the wind tunnel show that NH_4-N concentration in the tank decreases at different rates depending on the treatment variables. For each run, by using first-order kinetics, a straight line was fit after logarithmic-transformation of concentration values, and the rate constant was calculated for NH_4-N depletion. The calculated rate constants and half-life values, which describe the NH_4-N depletion rate, are shown in Table 2.

The highest rate constant for NH_4-N depletion and the shortest half-life occurred when the pH was 10.5; the lowest rate constant and the highest half-life value occurred when the pH was 6.5. In the wind-tunnel runs, it is interesting to note that the rate constant almost doubled from 0.00028 to 0.00054 when the temperature was increased from 20 to 30 °C, which is common for chemical reactions. As shown in Table 2, the greater the water depth and the lower the wind speed, the lower the rate constant became, with the result of increasing the half-life, and vice versa.

The observed NH_3 loss in the wind-tunnel runs and the values predicted by the model over a 6-h period are shown in Table 1. The model overpredicted NH_3 loss at high pH (10.5) and at a high wind speed (8.9 m s^{-1} at 8-m height) by a factor of 1.8 to 2 times, which

Table 2. Rate constants and half lives for NH_4-N depletion in the solution for wind-tunnel runs. (Refer to Table 1 for details on wind-tunnel runs.)

Wind tunnel run	Rate constant	Half life
	min^{-1}	h
1. Mean (1)	0.00049	23.57
2. Mean (2)	0.00048	24.06
3. Mean (3)	0.00040	28.88
4. NH_4-N conc.–low	0.00039	29.62
5. NH_4-N conc.–high	0.00043	26.86
6. pH–low	0.00008	144.38
7. pH–high	0.00190	6.08
8. Temperature–low	0.00028	41.25
9. Temperature–high	0.00054	21.39
10. Water depth–low	0.00075	15.40
11. Water depth–high	0.00027	42.78
12. Wind speed–low	0.00041	28.17
13. Wind speed–high	0.00069	16.74

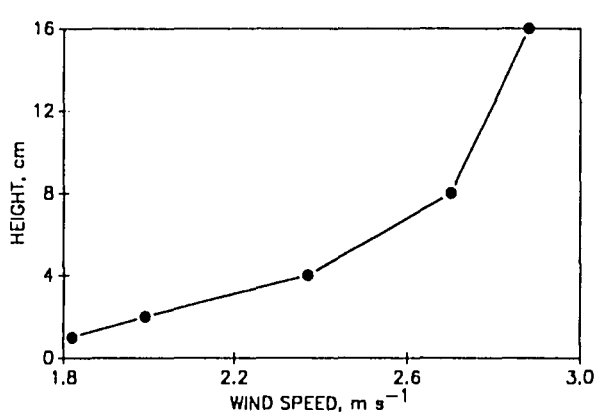

Fig. 3. Typical wind-speed profile in the wind tunnel.

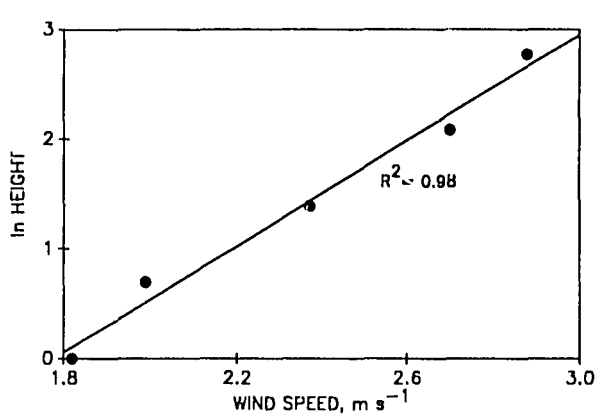

Fig. 4. Typical wind-speed profile in the wind tunnel after logarithmic transformation.

19

is acceptable (Thomas, 1982). Linear regression of the observed NH_3 loss on the predicted values is reported in Table 3. The regression coefficient, r^2, improved greatly when the high-pH run was omitted. Further improvements can be seen when the extremes of high wind speed and low pH were also omitted, and a regression equation with $r^2 = 0.98$ was obtained. This shows, however, that the model has some limitations at high wind speed and high pH. The close fit (Fig. 5) of the observed on the predicted values shows that the model predicts NH_3 loss quite well within the range of conditions usually found in flooded rice systems.

As discussed in Jayaweera and Mikkelsen (1990b), NH_3 volatilization per se is primarily dependent on two parameters, aqueous NH_3 concentration, NH_3(aq), and the volatilization rate constant for NH_3, k_{vN}. Table 4 shows the effect of five variables on NH_3(aq) and k_{vN} in the wind-tunnel experiments. It is important to note that, when we compare values in Table 4, the initial NH_4-N concentration and the wind speed could not be maintained at an exact fixed value (Tables 1 and 4); however, the experimental values were always close to the target values.

The initial NH_3(aq) concentration was maintained at 0.61 mol m^{-3} in the low- and high-water-depth runs, low- and high-wind-speed runs, and in runs using mean values (Table 4). This shows that depth of water in the tank and the wind speed did not influence the concentration of NH_3(aq). However, low- and high-NH_4-N runs, low- and high-pH runs, and low- and high-temperature runs did influence the NH_3(aq) in the system. At the low value of each of these variables, the initial NH_3(aq) was lower than the mean, and vice versa. As shown in Table 4, in low- and high-NH_4-N runs, the difference in NH_3(aq) was due to the difference in the initial NH_4-N concentrations (Jayaweera and Mikkelsen, 1990b). In low- and high-pH runs, NH_3(aq) is dependent on the fraction of the dissociation of NH_4 to NH_3(aq). At pH 6.5, the fraction of dissociation is negligible (0.0018); but at pH 10.5, the fraction increases to 0.85, compared with 0.15 at pH 8.5 (all other wind-tunnel runs). In low- and high-temperature runs, the differences in NH_3(aq) are due to changes in the association and dissociation rate constants, k_{aN} and k_{dN}, respectively, which influence the degree of dissociation of NH_4 to NH_3 (Jayaweera and Mikkelsen, 1990a,b). It is interesting to note that, as temperature increased from 20 to 30 °C, the degree of dissociation increased approximately twofold from 0.11 to 0.20, and nearly doubled the initial NH_3(aq) in the system from 0.44 to 0.82 (Table 4). Therefore, the volatilization rate of NH_3 in low- and high-NH_4-N-concentration runs, low- and high-pH runs, and low- and high-temperature runs were brought about by the influence of these variables on NH_3(aq) in the system. The higher the intensity of each variable, the higher the NH_3(aq) and, in turn, the higher the NH_3 loss, and vice versa.

In several of the wind-tunnel runs, the NH_3 loss was determined by the k_{vN}. The lower the k_{vN}, the lower the volatilization rate of NH_3, which decreased the amount of NH_3 loss, and vice versa. For low- and high-

Table 3. Tests of slope = 1.0 and intercept = 0 from regression of observed on predicted NH_3 loss in wind-tunnel runs.

Regression details	r^2	Slope	Intercept
All wind tunnel runs (i.e., 13 runs)	0.86	0.46	3.86
All wind tunnel runs except high-pH and high-wind-speed runs	0.97	0.92	0.38
All wind tunnel runs except high- and low-pH and high-wind-speed runs	0.98	0.99	−0.43

Table 4. Effect of model inputs on volatilization rate of NH_3, aqueous NH_3 concentration [NH_3(aq)], volatilization rate constant (k_{vN}), and other parameters in predicting NH_3 loss in wind-tunnel experiments. Mean is the average of three runs.

Wind-tunnel run†		Initial volatilization rate	k_a†	k_d§	α¶	NH_3(aq)	H_N#	k_{lN}††	k_{gN}‡‡	K_{ON}§§	k_{vN}
		mg L^{-1} s^{-1}	M^{-1} s^{-1}	s^{-1}		mol m^{-3}	MPa m^3 mol^{-1}	cm h^{-1}			s^{-1}
Mean (avg. of 3)		4.7×10^{-4}	4.3×10^{10}	24.6	0.15	0.61	5.5×10^{-6}	2.7	3181	4.9×10^{-5}	1.9
NH_4-N conc. mg L^{-1}											
4 Low	26.24	2.2×10^{-4}	4.3×10^{10}	24.6	0.15	0.30	5.5×10^{-6}	2.5	3025	4.5×10^{-5}	1.8
5 High	102.54	8.7×10^{-4}	4.3×10^{10}	24.6	0.15	1.19	5.5×10^{-6}	2.6	3092	4.7×10^{-5}	1.9
pH											
6 Low	6.5	4.3×10^{-6}	4.3×10^{10}	24.6	0.002	0.007	5.5×10^{-6}	2.5	3025	4.5×10^{-5}	1.8
7 High	10.5	4.6×10^{-2}	4.3×10^{10}	24.6	0.95	3.57	5.5×10^{-6}	2.8	3293	5.1×10^{-5}	2.0
Temperature, °C											
8 Low	20	3.1×10^{-4}	3.8×10^{10}	15.0	0.11	0.44	5.1×10^{-6}	2.6	3092	4.6×10^{-2}	1.8
9 High	30	7.1×10^{-4}	4.9×10^{10}	39.5	0.20	0.82	5.8×10^{-6}	2.8	3293	5.2×10^{-5}	2.1
Water depth, cm											
10 Low	6.42	7.9×10^{-4}	4.3×10^{10}	24.6	0.15	0.61	5.5×10^{-6}	2.6	3159	8.3×10^{-5}	1.9
11 High	21.28	2.3×10^{-4}	4.3×10^{10}	24.6	0.15	0.58	5.5×10^{-6}	2.6	3159	2.5×10^{-5}	1.9
Wind speed at 8 m, ms^{-1}											
12 Low	2.93	2.8×10^{-4}	4.3×10^{10}	24.6	0.15	0.60	5.5×10^{-6}	1.6	2194	3.0×10^{-5}	1.2
13 High	8.18	1.3×10^{-3}	4.3×10^{10}	24.6	0.15	0.61	5.5×10^{-6}	9.4	6099	1.4×10^{-4}	5.5

† Refer to Table 1 for details on wind-tunnel runs.
‡ Association rate constant for NH_3
§ Dissociation rate constant for NH_3
¶ Fraction of dissociation
# Henry's law constant for NH_3
†† Liquid-transfer exchange constant
‡‡ Gas-transfer exchange constant
§§ Overall mass-transfer coefficient for NH_3

20

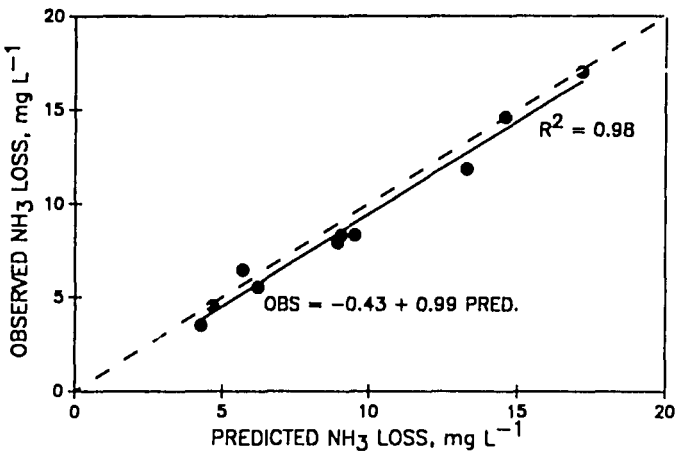

Fig. 5. Regression of observed on predicted NH_3 loss in wind-tunnel runs.

NH_4–N runs and low- and high-pH runs, the average was 4.7×10^{-5} s^{-1}, which is comparable with the average mean value of 4.9×10^{-5} s^{-1} (Table 4). However, in low- and high-temperature runs, low- and high-water-depth runs, and low- and high-wind-velocity runs, the k_{vN} differed from the average mean value. These differences were due to entirely different causes (Jayaweera and Mikkelsen, 1990a,b).

Henry's law constant of NH_3, H_N, is a function of temperature (Jayaweera and Mikkelsen, 1990a). Therefore, as the temperature increased, the H_N also increased, rising from 5.07×10^{-6} MPa m^3 mol^{-1} at 20 °C to 5.47×10^{-6} MPa m^3 mol^{-1} at 25 °C and 5.78×10^{-6} MPa m^3 mol^{-1} at 30 °C. The change in H_N changed the overall mass-transfer coefficient for NH_3, K_{ON}, and the k_{vN}. At 20 °C, the k_{vN} decreased to 4.6×10^{-2} s^{-1} and, at 30 °C, it increased to 5.2×10^{-2} s^{-1} relative to the average mean value of 4.9×10^{-5} s^{-1} at 25 °C. In low-and high-water-depth runs, the K_{ON} remained constant at 1.9 cm h^{-1}, which is the same as the average mean value. This is due to having the same Henry's law constants and liquid- and gas-phase exchange constants for NH_3, k_{lN} and k_{gN}, respectively. However, due to differences in water depth, the k_{vN} was higher for a depth of 6.42 cm, compared with a mean depth of 11.0 cm, and k_{vN} was lower at a depth of 21.28 cm (Table 4).

In the low- and high-wind-velocity runs, the k_{vN} was influenced through the k_{lN} and k_{gN}. When the wind speed was 1.9 m s^{-1}, k_{lN}, k_{gN}, and K_{ON} were low; and when the wind speed was high (5.3 m s^{-1}), these exchange constants were high (Table 4), thereby influencing the k_{vN}. A decrease in k_{vN} decreases the volatilization rate of NH_3, thereby decreasing the amount of NH_3 loss, and vice versa.

Field Validation

The pH, temperature, and wind-speed data collected from rice paddies were recorded continuously in the data logger and averaged for 6, 12, and 24 h to predict NH_3 loss. These values were also compared with observed NH_4–N-depletion data, gathered during 3 d at two different time periods and averaged for 6 and 24 h. Figure 6 shows the close agreement of predicted values with observed data from the field study. Regression of observed NH_4–N-depletion values on predicted values to test the closeness of fit also showed the close agreement of observed and predicted values (Table 5). As the averaging time was increased to 24 h, the regression slope increased to slightly greater than one, and the intercept decreased below zero (Table 5). Since there is slight deviation, however, the predictions done with values from the 24-h averaging period are well within the acceptable range. It is important to note that, during the first set of field-study comparisons studied on 4 August, 12:18 h, the 1-h average values for pH varied from 7.84 to 8.11, while temperature varied from 14.9 to 28.8 °C and wind speed varied from 0.8 to 3.4 m s^{-1}. The change in concentration of NH_3(aq), the k_{vN}, and the volatilization rate of NH_3 as a function of model inputs with 1-h average of pH, temperature, and wind speed in the field experiment is shown in Table 6. In the second set of comparisons, started on 8 August, 6:28 h, pH varied from 7.90 to 8.10, temperature from 14.6 to 27.1 °C, and wind speed from 1.3 to 3.8 m s^{-1}.

By scrutinizing the wind-tunnel and field experimental data, the amount of NH_3 loss, which is a func-

Table 5. Tests of slope = 1.0 and intercept = 0 from regression of observed on predicted NH_4–N depletion in the field experiment with different averaging periods.

Experimental period	Averaging period	r^2	Slope	Intercept
4 to 7 August	6 h	0.99	1.07	−3.30
	12 h	0.99	1.08	−4.15
	24 h	0.99	1.12	−5.58
8 to 11 August	6 h	0.99	0.95	1.76
	12 h	0.98	1.00	0.02
	24 h	0.99	1.05	−1.79

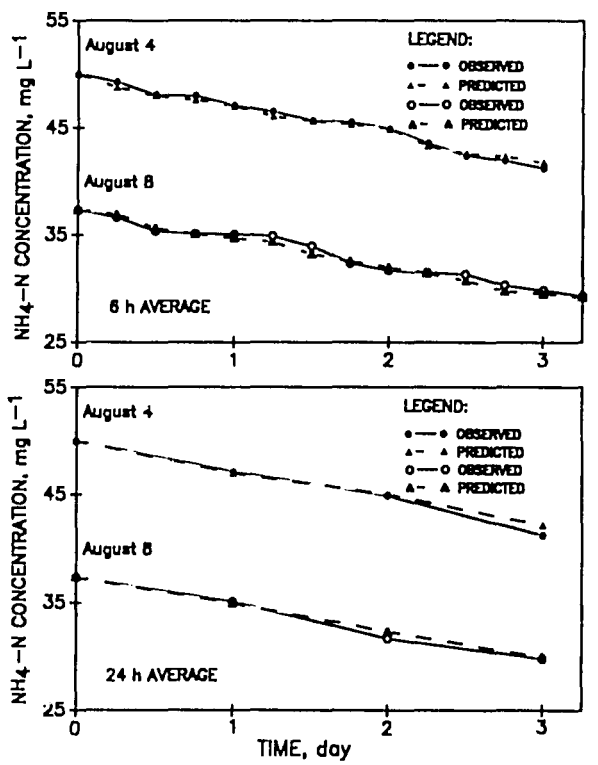

Fig. 6. Predicted and observed NH_4–N depletion in the field.

Table 6. Effect of model inputs on aqueous NH_3 concentration [NH_3(aq)], volatilization rate constant (k_{vN}) and NH_3 volatilization rate for the field experiment (6-h averages).

Time	NH_4-N conc.	pH	Temperature	Water depth	Wind speed at 2-m height	Initial NH_3(aq)	k_{vN}	Initial volatilization rate
h	mg L^{-1}		°C	cm	m s^{-1}	mol m^{-3}	s^{-1}	mg L^{-1} s^{-1}
0	50.0	7.90	28.47	15	2.26	0.21	2.0×10^{-5}	5.8×10^{-5}
6	48.76	7.93	21.98	15	2.11	0.14	1.8×10^{-5}	3.5×10^{-5}
12	48.01	8.06	15.71	15	1.33	0.12	1.2×10^{-5}	1.9×10^{-5}
18	47.60	8.11	17.14	15	1.54	0.14	1.4×10^{-5}	2.6×10^{-5}
24	47.02	7.84	28.75	15	2.07	0.17	1.8×10^{-5}	4.4×10^{-5}
30	46.07	7.88	20.94	15	1.56	0.11	1.4×10^{-5}	2.1×10^{-5}
36	45.62	8.04	15.05	15	0.97	0.10	9.7×10^{-6}	1.3×10^{-5}
42	45.33	8.05	18.07	15	1.18	0.13	1.1×10^{-5}	2.0×10^{-5}
48	44.91	7.87	26.84	15	3.44	0.16	3.4×10^{-5}	7.3×10^{-5}
54	43.36	7.98	20.11	15	2.54	0.12	2.2×10^{-5}	3.7×10^{-5}
60	42.56	8.08	14.86	15	0.83	0.10	8.8×10^{-6}	1.2×10^{-5}

tion of volatilization rate of NH_3, can be quantitatively described by the concentration of NH_3(aq) in the floodwater, which, in turn, is governed by NH_4-N concentration, pH, and temperature, and by the k_{vN}, which is a function of temperature, water depth, and wind speed.

SUMMARY AND CONCLUSIONS

The theoretical NH_3-volatilization model described by Jayaweera and Mikkelsen (1990a,b) was validated in a variable controlled wind tunnel and in the field. In the wind-tunnel experiments, the regression of observed on predicted NH_3 loss yields observed NH_3 loss $= -0.43 + 0.99$ (predicted NH_3 loss), with a r^2 of 0.98. It should be noted, however, that some data were omitted in obtaining this regression. In the field experiment, using a similar regression for two sets of comparisons of experimental and predicted values, the slope was close to 1.0 and the intercept near zero. By averaging the pH, temperature, and wind-speed data in the field over 6-, 12-, and 24-h periods, it is possible to obtain predictions that are quite accurate. Observed values from the wind-tunnel and field experiments agreed closely with the predicted values from the model.

The model calculations shown that NH_3(aq) in floodwater is governed by NH_4-N concentration in the floodwater, the pH, and the temperature. Ammoniacal-N concentration directly influences the floodwater NH_3(aq), whereas pH and temperature influence NH_3(aq) through the fraction of dissociation of NH_4-N. The higher the NH_4-N content, pH, and temperature, the higher the NH_3(aq) in floodwater, thus increasing the volatilization rate of NH_3 and NH_3 loss. Further, the k_{vN} is governed by temperature, water depth, and wind speed. A high temperature and high wind speed, together with low water depths, increases the k_{vN}, thus increasing the amount of NH_3 loss.

The model is useful in understanding the complex NH_3-volatilization process by considering only two parameters, aqueous NH_3(aq) concentration and k_{vN}, as functions of five variables: NH_4-N concentration, pH, temperature, water depth, and wind speed, which determine the volatilization rate of NH_3. This model allows accurate prediction of NH_3 loss in the range of conditions found in flooded rice systems.

ACKNOWLEDGMENTS

We wish to express our appreciation to Dr. W.A. Williams for guidance in statistical procedures, to Mr. David F. Paige for design and advice on instrumentation, and to Dr. A. Hafez and A. Abshahi for technical assistance.

REFERENCES

Abshahi, A., S.S. Goyal, and D.S. Mikkelsen. 1988. Simultaneous determination of urea and ammonium nitrogen in soil extracts and water by high performance liquid chromatography. Soil Sci. Soc. Am. J. 52:969–973.

Fillery, I.R.P., and P.L.G. Vlek. 1986. Reappraisal of the significance of ammonia volatilization as a N loss mechanism in flooded rice fields. Fert. Res. 9:79–98.

Jayaweera, G.R., and D.S. Mikkelsen. 1990a. Ammonia volatilization from flooded soil systems. A computer model: I. Theoretical aspects. Soil Sci. Soc. Am. J. 54:1447–1455 (this issue).

Jayaweera, G.R., and D.S. Mikkelsen. 1990b. Ammonia volatilization from flooded systems. A computer model: II. Theory and model results. Soil Sci. Soc. Am. J. 54:1456–1462 (this issue).

Liss, P.S. 1973. Processes of gas exchange across an air-water interface. Deep-Sea Res. 20:221–228.

Smith, S.D. 1970. Thrust-anemometer measurements of wind turbulence, Reynolds stress, and drag coefficient over the sea. J. Geophys. Res. 75:6758–6770.

Thomas, R.G. 1982. Volatilization from water. p. 15.1–15.34. *In* W.J. Lyman et al. (ed.) Handbook of chemical property estimation methods: Environmental behavior of organic compounds. McGraw-Hill Book Co., New York.