XD-AAU-069-A
46561

IMPACT EVALUATION

OF THE

HONDURAS RURAL TECHNOLOGIES PROJECT

Conducted by:

WINROCK INTERNATIONAL

December 6, 1985 - March 8, 1986

IQC Contract Number
522-9103-1-00-3110-00
Work Order Number 34

Team member: James B. Fitch, Economist, Team Leader
Edgar G. Nesman, Sociologist, Evaluation Specialist
Eugenio Martinez, Agronomist, Farming Systems
Loyd Johnson, Agricultural Engineer
Robert Terzuola, Small Enterprise Development

31 -

TABLE OF CONTENTS

	Page
EXECUTIVE SUMMARY	v
LIST OF ACRONYMS	xiv
1. INTRODUCTION	1-1
1.1 Origin of the Project	1-1
1.2 USAID and GOH Strategies	1-2
1.3 Project Objectives	1-3
1.4 Previous Evaluations	1-4
1.5 Objectives of This Evaluation	1-5
2. EVALUATION METHODS	2-1
2.1 Field Reconnaissance Survey	2-3
2.2 Institutional Analysis	2-4
2.3 Field Survey	2-5
2.3.1 Design of questionnaire	2-5
2.3.2 Sample size and selection	2-7
2.3.3 Selection and training of interviews	2-11
2.3.4 Field procedures	2-13
2.3.5 Data processing	2-15
2.3.6 Data analysis	2-15
2.4 Case Studies	2-16
2.5 Economic Analysis	2-16
3. INSTITUTIONS	3-1
3.1 Institutional Background of the Project	3-1
3.2 Present Organiation of PTR	3-2
3.2.1 Staff and training	3-4
3.2.2 Staff turnover	3-9
3.2.3 Funding and flow of funds	3-9
3.2.4 Technical assistance	3-12
3.2.5 Technical information	3-14
3.2.6 Planning and evaluation	3-14
3.3 Institutional Linkages	3-16
3.3.1 Linkages to MNR	3-17
3.3.2 Private voluntary organizations	3-21
3.4 PTR's Operating Approach	3-22
3.4.1 Implementation of farming systems methodology	3-23
3.4.2 Credit and payment for project technologies	3-26
3.5 Concluding Observations	3-29

3.V

Page

4. IMPACT ON RURAL HOME, SMALL FARMS AND SMALL RURAL BUSINESS . 4-1
4.1 Overall Description of Beneficiary Population 4-1
4.1.2 Characteristics of the people interviewed 4-3
4.1.3 Characteristics of the technologies 4-9
4.2 Impact of Farm Technologies 4-14
4.2.1 Silo grain storage technology 4-14
4.2.2 Soil conservation technology use 4-18
4.2.3 Irrigation technology use 4-23
4.2.4 Corn sheller technology 4-27
4.2.5 Miscellaneous farm technologies 4-28
4.3 Impact of Home Technologies 4-30
4.3.1 Use of lorena stove 4-30
4.3.2 Soap making technology 4-33
4.3.3 Miscellaneous home technologies 4-34
4.4 Impacts on Rural Enterprises 4-35
4.4.1 Small business development 4-36
4.4.2 Small industry development 4-38
4.4.3 Case study on rural industry -- cocoa fermenting and drying 4-40
4.4.4 Case study on a rural industry -- shrimp production 4-43
4.4.5 Case study on small industry -- yucca snack food. 4-46
4.4.6 Case study on small rural business -- cashew project 4-48
4.4.7 Rural enterprise development conclusion and recommendations 4-50

5. ECONOMIC ANALYSIS 5-1
5.1 Benefits and Costs to Individual Participants 5-3
5.1.1 Alternate methods of evaluation 5-3
5.1.2 Number of participants 5-5
5.1.3 Summary of benefits 5-8
5.2 Costs and Benefits to the National Economy 5-9
5.2.1 Project funding and and expenditures 5-10
5.2.2 Benefit-cost analysis 5-12
5.2.3 Actual versus planned performance 5-14
5.2.4 Performance under reduced goals 5-16
5.3 Linkages to the National and International Economies . . 5-16
5.3.1 Production, income and employment 5-16
5.3.2 Indirect impacts 5-19
5.3.3 Impacts on health, environment and natural resources 5-20
5.3.4 Impacts on trade and foreign exchange 5-22
5.4 Concluding Remarks 5-23

LIST OF REFERENCES

37

Tables

		Page
2.1	Sample Allocation Based on Weighted % of Cases, Weighting Based on Expected Benefits per Case	2-9
3.1	Private Voluntary Organizations	3-18
4.1	Technology Groups Described as Percentage of Total Technologies Disseminated During Time Frame	4-2
4.2	Costs and Returns to Cacao Fermenting/Drying	4-42
4.3	Costs and Returns of Casabe Production	4-49
5.1	Summary of Costs and Benefits of Selected PTR Technologies	5-4
5.2	Summary of Past and Projected Number of Technologies Disseminated, and Associated Net Benefits	5-6
5.3	Detail of Actual Project Expenditures for PTR, 1979-1985	5-11
5.4	Analysis of Overall Benefits of the Rural Technologies Project (Base Run)	5-13
5.5	Analysis of Overall Benefits of the Rural Technologies Project (Reduced Goals)	5-17
5.6	Analysis of Overall Benefits of the Rural Technologies Project (With Diffusion)	5-21

Figures

		Page
3.1	Organigram	3-3
3.2	Organigram PTR	3-5
3.3	Staff of PTR by Function and Location	3-6
4.1	Marital Status of Survey Respondents	4-4
4.2	Sexual Characteristics of Survey Respondents	4-5
4.3	Literacy Level Reported by Survey Respondents	4-7
4.4	Housing Characteristics	4-8
4.5	Frequency of Promotor Visits Reported by Survey Respondents	4-11
4.6	Use Level of Appropriate Technologies	4-13

34

Appendix Tables

1. Proportion of Men and Women Interviewed
2. Personal Characteristics of Beneficiaries
3. Household Characteristics of People Interviewed
4. Type of Technology Reported by Respondents
5. Year Participant Started in Program
6. Year of Technology Initiation
7. Frequency of Visits by Program Representative
8. Level of Technology Use
9. Year When Silo was Obtained
10. Grain Stored and Losses with and without Silo
11. Year of Soil Conservation Technology Application
12. Soil Conservation Land Area (MZS)
13. Use of Hand Corn Sheller
14. Wood Consumption and Lorena Stove Use
15. Benefits of Lorena Stove

Appendix A. Technologies in the Rural Technologies Project
Appendix B. Field Questionnaire used by Evaluation Team

35

0. EXECUTIVE SUMMARY

0.1 Purpose of the Evaluation

The Rural Technologies Project (No. 522-0157) was signed in August 1979 for an initial five years. Its purpose is to improve the socio-economic status of poor rural farm families and the small rural entrepreneur by providing them with light capital technologies developed, adapted, and disseminated by the project.

A mid-term evaluation by an outside evaluator in 1983 was favorable, and the project was renewed in September 1984 to run until September 1988. In 1984, the Regional Inspector General conducted an audit of the project, and the auditors' report, delivered in September 1985 was highly critical. It found that "relatively few high priority technologies for agriculture and industry had been disseminated, and many of the technologies reportedly disseminated were not working."

The USAID Honduras Mission did not agree with the audit finding and decided to fund a special evaluation to be conducted by an independent team of specialists. Winrock International was contracted for this purpose.

0.2 Summary

The Rural Technologies Project was the outgrowth of the MNR's Small Farmer Project funded by AID in 1976. A multiple thrust was begun involving agencies from several different ministries. The first two years involved much trial and error, and many problems arose with inter-agency coordination. In 1982, the Center for Industrial Development (CDI) became the principal implementing agency of the project when several of the other implementing agencies dropped out of the program. A special Office for the Rural Technologies Project (PTR) was established in CDI.

The 1983 evaluation by Development Associates, Inc. (DAI) found considerable evidence of progress and found that PTR had developed a unique capability for "reaching the target population, the very poor rural residents." The evaluation found weaknesses in the area of agriculturual development, however, and suggested that a broader, more balanced approach be pursued.

In late 1984, PTR implemented the Farming Systems Methodology (FSM) and changed its entire approach to identifying participant needs as well as to adapting and disseminating technologies. This change required extensive in-service training and undoubtedly resulted in some loss of momentum while procedures and program were being reorganized.

To date, the project has disseminated an estimated 8,532 technologies of several dozen different types. These have benefitted more than 5,000 participants or participant families. Some of the technologies, such as the lorena stove, have already made striking impacts. While there is continuing need to focus activities and to settle on a more realistic set of operational

36

goals, the project is reaching its target group and meeting its economic objectives.

0.3 Evaluation Methodology

The terms of reference for the evaluation called for an interdisciplinary approach, and a five-man team was selected with expertise in sociology and survey methodology, farming systems and agronomy, engineering, economics, and small business management.

A field survey was designed by the team in conjunction with project personnel. It was based on a carefully designed, stratified random sample of 291 project participants. The survey was carried out in January and February 1986, using experienced Hondurans to conduct the interviews. Evaluation team members spent three additional weeks in Honduras in late February, revisiting interviewee households and farm sites to verify survey results.

The team also made special study visits to small rural businesses and industries which had participated in the project. Numerous PTR and AID personnel were contacted, and visits were made to more than a dozen related Honduran agencies and organizations.

The methods followed in preparing the final report include institutional analysis, statistical analysis and interpretation of survey results, descriptive case studies of small businesses and industries, and benefit-cost analysis.

0.4 Inputs

The first stage of the project was funded with a $5 million grant, and an additional $4 million was added in 1984. With host country inputs, total approved funding for the project is $16.9 million, including $4 million for credit. Through the end of 1985, $9.2 million had been expended. While ample funds remain in the credit budget, there will not be enough funds in the operating budget to last until 1988, and action will have to be taken to secure additional funding.

Flow of funds has represented a periodic problem to the project, at times causing delays in procurement of local goods and services. A revolving fund of $450,000 was established in 1985 and appears to have helped to reduce the problem. Nevertheless, flow of documentation for payment has continued to experience delays, since it involves not only PTR, but also the Ministries of Economy and Finance, and sometimes PVOs. In some recent cases, this has taken up to four months. Added to this have been delays of more than two months in receiving payment from the AID disbursing office in Mexico City.

With the exception of flow of funds problems, which are serious but not critical, there appears to have been adequate financial support and availability of needed inputs to the project. This has included vehicles, other equipment, and foreign technical assistance.

37

0.5 Outputs

To date, more than 8,500 technologies have been distributed through the PTR program. Lorena stoves have constituted almost half of these. While considered a "household technology", the stove has impacts on family income (58% savings in wood costs and/or reduction in cutting time which frees family labor for other productive use), it cooks faster, and it eliminates soot and dirt in the family income.

Farms have benefited from grain storage silos (778), soil conservation and irrigation technologies (697), and an assortment of production improvements which includes small farm machinery, improved seed and planting methods, and animal production improvements.

Some 998 businesses or individuals have participated in efforts to push the development of rural enterprises. This has included loans made to rural shops and artisans, training in improved bookkeeping methods, and development of improved machinery and equipment for small rural industries.

Based on the sample survey, it was estimated that 81% of the technologies are used regularly, whereas 7% are used sometimes. Performance varied among technologies, ranging from 97% always using the lorena stove to 29% always using home soap making. From the survey, the evaluation team concludes that most technologies are used regularly, i.e.. that they are "working".

The overall average benefit per technology was Lmp 263 ($132) per year during the first seven years of the project. With an average of 1.7 technologies per family, this implies an average increase of Lmp 447 in the annual income of participant families. This represents a 27 percent increase over the average traditional farm income in Honduras.

Based on performance to date and reasonable expectations for the future, it is estimated that the project will have a benefit-cost (B/C) ratio of 1.22 over a 20 year period. Under modest assumptions about diffusion of technologies to non-participants -- which could not be measured by the survey -- the B/C ratio is 2.18. This does not take obvious but intangible environmental or household benefits into account.

While the individual technologies in the project vary in their performance, many have highly positive economic impacts and are well received by project participants. These include the grain storage silo, certain soil conservation and irrigation techniques, and the lorena wood stove.

The evaluation team estimates that 9,430 families will have been directly benefitted by the project by 1988. This is substantially fewer than the 50,000 families projected in the original project paper. However, the average benefit of Lmp 448 ($224) per family which is being achieved is some 18 times higher than the $12.38 estimated in the original project paper.

Overall impact of the project on trade and foreign exchange is seen to be quite favorable because the technologies rely mainly on available local resources and do not require expensive imports. Several of the products of small rural industries being developed within the project are exportable,

while staples being produced for the local market will serve to reduce imports in some cases.

0.6 Beneficiaries

The project is aimed at rural families with per capita annual incomes of less than Lmp 600, at small farms with less than 5 manzanas of land, and at small rural enterprises. Beyond a doubt, it is reaching poor households and farms with very limited resources. Almost one-half of the survey households had dirt floors, and only 18% had sanitary toilets. Soil improvement and irrigation participants averaged 2 and 2.9 manzanas (1 mz = 1.75 acres) of land, respectively.

While many of the characteristics of the survey sample compare well with those that are expected for the proposed target group, literacy and educational levels, as well as the number of radios, sewing machines, and refrigerators, are all higher than would be expected.

0.7 External Factors

External factors and unforeseen events have played a significant role in the project. A shrimp cultivation enterprise involving 150 cooperative farmers was seriously disrupted when floods washed out levees. In another case, nine water wheels were installed on a river which was later diverted by an upstream government project.

Perhaps the most serious external factor affecting the project is the amount of turnover among high level managers and even key technical staff. At the upper level, this is often a reflection of governmental and political changes.

At the technical level, staff turnover stems more from the fact that project personnel are employed on the basis of relatively short-term contracts. Nevertheless, current project management has made considerable progress in this regard; the contract period has been increased from three months to a year, which is the longest permitted under Honduran law for agencies without permanent status.

No decision has yet been made as to the long-run funding or insititutional status of the PTR program. The agency would probably be more stable if it were to be reorganized as a private voluntary organization or a foundation. This would require developing additional sources of funding.

Only the enthusiasm, professionalism, and good will demonstrated by the great majority of PTR personnel have kept its institutional instability from seriously impairing performance.

0.8 Lessons Learned

Several important lessons have been learned from this project. It has demonstrated that "marginalized" rural poor can be reached by creating a

39

project which operates outside established institutional channels. This ultimately presents a paradox, however, in that such an agency by its nature may only receive limited commitment from the government.

The problems and needs of the rural poor are so diverse that there is a natural tendency to try to do too much. In the case of PTR, this has been manifested by trying to work on too many different technologies at once, thus developing too much breadth and not enough debth. Fortunately the project has already taken a major step toward correcting this problem through the implementation of the Farming Systems Methodology (FSM).

While PTR is achieving its overall objective of benefiting the rural poor, specific goals set up in the poroject agreement have often been unrealistic. At this time, there is a need to redefine operating goals away from the emphasis on sheer numbers of technologies disseminated and to give more emphasis to selectivity, and quality. These will lead to the diffusion upon which much of the project's success in the future will rest.

PTR has been more successful in helping small rural businesses (carpenters, shoe shops, dress makers) than it has in helping small rural industries (cocoa bean processing, snack food manufacture). This can be explained by the fact that it has often been possible to help the small businesses by merely providing simple business management guidance and giving them loans, whereas industries require more sophisticated technical and organizational assistance.

0.9 General Observations

0.9.1 Technical capabilities and training. Staff are generally quite young, and most had limited experience prior to joining the project. A wide variety of disciplines are represented within the staff, including agronomists, agricultural and mechanical engineers, architects and business administrators. In-service training, particularly in farming systems, has done much to strengthen staff capabilities. However, additional training is still needed. In the past, training needs appear to have been handled on an ad hoc basis. The project needs a training officer, an explicit training plan, and explicit funding for training.

Organizationally, PTR is limited by the fact that it does not have a Technical Coordinator (Coordinador Tecnico). Rather, there is a Technical Unit which serves in an advisory function, without line authority. Division of responsibility and authority between the Management and the Technical Unit are somewhat blurred. This causes confusion on the part of personnel at the field level who have their most frequent and direct contact with Technical Unit personnel. The organization would function more effectively if it had a Technical Coordinator with the authority to direct the activities of the Zonal Coordinators.

PTR field agents do a good job of visiting project participants in support of the technology adoption process. They appear to have a close and respectful relationship with their clients. This trusting support was refreshing to observe and should be reinforced as much as possible.

0.9.2 Linkages to other agencies. The project currently has working agreements with eleven different PVOs and has worked with many others in the past. It was evident to the evaluators that these agreements have greatly enhanced the project's ability to work with a larger group of participants. The most common type of agreement permits use of project funds to support PVOs in disseminating technologies which have been tried and proven by PTR. Some PVOs have substantial technical capabilities, and in some cases, these have been used to complement those of PTR staff.

The Development and Adaptation Unit (UDA) of MNR is a small but competent prototype development and testing shop which has as its primary objective to support the needs of PTR in developing, adapting, and testing appropriate farm and rural equipment. As is true of PTR, UDA has worked on such a large number of technologies that it has not always achieved the depth and degree of concentration that is required to perfect those with true potential. While UDA is participating in the new farming systems approach, a closer integration into this effort could serve to give it the needed focus while ensuring that its activities are in step with those of PTR.

One area where UDA and PTR have been weak is in promoting the manufacture and marketing of improved equipment through private channels. PROMECH is a Swiss-funded agency within the Ministry of Natural Resources which has these functions as its explicit objectives. In the past, PTR and AID-Honduras have tried to work with PROMECH, but without success. Currently, there are indications of change in the administration of PROMECH, however, and every effort should be made to forge this badly needed institutional linkage.

In general, the linkages and relations between AID-Honduras and the project were found to be sound, amiable and constructive.

0.9.3. Technical assistance. Since the beginning of the project, AID has contracted the services of a Small Business and Technology Adviser for the project. One person has filled this role for the entire period, which has added greatly to continuity. The Technology Adviser has worked effectively and made many strong contributions to the project, but he is often required to carry out administrative functions that limit the time he may spend in technical activities. It would be advantageous if he could be assigned to work full-time with PTR.

The Agricultural Adviser has also contributed greatly to the project, particularly in the implementation of and training for the Farming Systems Methodology (FSM). It is important that he be retained within the project to ensure that transition to FSM is completed successfully.

Outside technical assistance has been utilized in a variety of areas. In some cases, it has been used to carry out rural industry feasibility studies. Most recently, a U.S.-based consulting firm, AGRIDEC, has been used to provide a series of workshops to train staff in FSM. Additional workshops and technical assistance are needed to reinforce the implementation of this system.

There are several areas where outside assistance is needed to provide guidance to project activities. Small-scale irrigation technology is one of these. Food processing technology is another. Marketing and economic evalution of projects and technologies are others. If these skills can be provided from within Honduras, the project should consider local hiring of staff members in these areas. Otherwise short-term technical advisers could be brought in from outside the country.

0.9.4 Credit. Credit has played a critical role in the project. In the early project years, PTR itself administered a credit program with non-project funds, aimed at small machine shops, furniture makers, shoe and dress makers, and an assortment of other rural businesses, with generally excellent results. PTR has also used "credit" (project AID funds with little or no interest charged) to permit the purchase of improved implements and silos, particularly in cases where these have still been considered to be experimental. There has been some reluctance on the part of the project staff to promote the use of credit for production inputs such as fertilizer.

Currently, a credit program which uses GOH Economic Stabilization Funds is being reorganized so that most funds will be administered through a private banks, PVOs and cooperatives, with the guidance and supervision of PTR staff. This is a sound approach in that it will take field staff out of the position of having to administer loans while trying to promote the use of improved technologies.

Time and effort needs to be devoted to the development and implementation of the new program, which will give very small farmers the opportunity to establish their creditworthiness with commercial banks, without collateral.

0.9.5 Private Voluntary Organizations. PTR has developed useful and productive relationships with private voluntary organizations, and this is contributing measurably to the achievement of the project's overall objectives.

0.9.6 The Farming Systems Methodology has made a dramatic impact on the project and on the operating approach of PTR. As a result, the project has developed a better means of identifying and addressing the needs and problems of the rural poor. This has caused PTR to focus more attention on improved farming methods and soil improvement techniques. Field adapting and testing of technologies have been improved.

0.10 Primary Recommendations.

1. The project should move at this time to adopt a new set of operating goals. Past experience has shown that setting goals in terms of numbers of specific technologies is unrealistic. It is preferable to set goals in terms of numbers of participants and levels of benefits per participant.

47

The evaluation team believes that a goal of 1,500 participants per year and an average annual increase of Lmp 440 in income per participant family would be realistic.

2. It is recommended that consideration be given to reorganizing PTR as a private foundation or private voluntary organization, in order to promote needed stability and reduce turnover among key staff members.

3. It is recommended that in considering the possible privitization of PTR, serious attention be paid to the issue of future funding. It is not likely that USAID and GOH will continue funding PTR in its present form at present levels beyond the scheduled 1988 project termination date. Sources of funds other than USAID and GOH should be developed. A PVO or private foundation established to operate the program should be organized in a way that will permit it to draw in funding from other sources and to administer funds effectively.

4. It is recommended that a Training Officer be appointed within PTR. A training plan should be developed and updated annually. The plan should concentrate on continued in-service training, with selected training abroad for key staff members. Specific funds for training should be identified.

5. The field operations of PTR should be re-organized to include a Technical Coordinator with full responsibility for directing the day to day technical activities of the project.

6. To insure continuity and continued strength in technical assistance, it is recommended that the Agriculture Adviser's contract be renewed and that the Small Business and Technical Adviser be assigned to work full time in PTR.

7. It is recommended that at least one more staff member be assigned to work in the Evaluation Unit of PTR and that the evaluators be given technical support in devising a simple but competent approach to economic evaluation of individual technologies.

It is further recommended that records of project participants and technologies be placed on a microcomputer with a data base management program to facilitate working with the large number of technologies and participants involved. Project participants should be selected at random from the data base each month for a visit by an evaluation officer. The visit should serve to verify that technologies reported have been received while providing feedback on performance and economic benefits.

8. It is also recommended that AID review and simplify its reporting requirements on number of beneficiaries and number of technologies disseminated. Requirements should parallel revised project goals.

9. It is recommended that more time and effort be devoted to the development and implementation of the program for administering project credit through private banks, cooperatives and PVOs.

10. It is recommended that careful projection of future project expenses and funding requirements be made at this time and that action be taken in order to secure the additional funds that will be required to carry this project to its planned end in 1988.

0.11 Other Recommendations.

1. It is recommended that AID and PTR sit together to again reconsider procedures which influence the time required for financial documentation, payments and flow of funds. Further reduction of the time required for flow of funds is required.

2. It is recommended that the training program for the farming systems methodology (FSM) be continued and strengthened and that particular attention be paid to the role of UDA and the PVOs under FSM.

3. To further improve the informational materials prepared by the Communication and Technical Information Unit (UCIT), it is recommended that there be closer coordination between UCIT, project technical directors, field staff, and UDA.

4. It is recommended that ties and coordination between PTR, UDA and PROMECH be strengthened. Consideration should be given to merging UDA directly to PTR rather than having it continue as a separate entity under MNR.

5. It is recommended that PTR reconsider its policies toward promoting the use of chemical fertilizer and the availability of credit for fertilizer use. Technical and economic data should be assembled and thoroughly analyzed in an impartial scientific manner. Benefits and costs of fertilizer should be compared to those of compost.

6. It is recommended that PTR accelerate its effort to identify a suitable animal drawn plow. The plow should be integrated in soil conservation and improved farming practices.

44

ACRONYMS

AGRIDEC	Compania des Desarrollo Agricola Agricultural Development Co.
BID	Banco Interamericano de Desarollo Interamerican Development Bank
CAR	Comite Agricola Regional Regional Agricultural Committee
CDI	Centro de Desarrollo Industrial Industrial Development Center
CEDIA	Centro de Documentacion e Informacion Agricola Center for Documentation and Agricultural Information
CEFIHA	Centro de Fabricacion de Implementos y Herramientas Agricolas
CIIBANTRAL	Centro de Information Industrial del Banco Central Central Bank Information Center
CIIUNAH	Centro de Informacion Industrial de la Universidad Nacional Autonoma de Honduras Industrial Information Center of the National University of Honduras
COHAAT	Cooperacion Hondureno/Alemana Alimentos por Trabajo
CONSUDE	Swiss Cooperation for Development Organization
CONSUPLANE	Consejo Superior de Planificaion Nacional Superior Council for National Planning
GOH	Government of Honduras
ICAITI	Instituto Centroamericano de Investigacion y Tecnologia Industrial Central American Institute for Research and Industrial Technology
IFAD	International Fund for Agricultural Development
IHCAFE	Instituto Hondureno del Cafe
INFOP	Instituto de Formacion Profesional Institute for Professional Training
INA	Instituto Nacional Agrario National Agrarian Institute

MOE	Ministry of Economy
MRN	Ministerio de Recursos Naturales Ministry of Natural Resources
NRMP	Natural Resources Management Project Proyecto de Manejo de Recursos Naturales
PROMECH	Programa de Mechanizacion Agricola
PTR	Oficina del Proyecto de Tecnologias Rurales Ofice of the Rural Technologies Project (under CDI)
PRR	Programa de Reconstruccion Rural Rural Reconstruction Program
SPSS	Statistical Package for Social Sciences
UDA	Unidad de Desarrollo y Adaptacion Development and Adaptation Unit (under MRN)
UCIT	Unidad de Communicacion e Informacion Tecnica Communication and Technical Information Unit
UNAH	Universidad Nacional Autonoma de Honduras National University of Honduras
USAID	Agencia Internacional para el Desarrollo Agency for International Development

46

INTRODUCTION

1.1 Origin of the Project

Rural poverty is a critical national problem in Honduras. The rural poor constitute more than 360,000 families, representing some 93 percent of the rural population and 61 percent of the total national population. Such families typically depend on subsistence farming for their livelihood, with occasional cash sales of basic grains and a few export crops (coffee, cacao)

Land is not evenly distributed. It is estimated that 63 percent of the farmers have less than 7 manzanas (11.4 acres) to cultivate; this constitutes only 9 percent of the total agricultural area (PROMECH, 1986, p. 22). Such farms tend to be on hillsides where soils are less fertile, while more fertile valleys and plains are dominated by large haciendas which often graze cattle, or by banana plantations. The small farms of the poor rely heavily on human labor and use very few modern inputs or improved technologies.

In 1976, USAID provided funding for the Small Farmer Technologies Project (522-0123) in the Ministry of Natural Resources (MNR). A related seminar held in 1978 led to the conclusion that GOH should accelerate its efforts to improve small farmer technologies and expand the scope of activity to encompass rural industries and rural households.

In 1979, the Rural Technologies Project (522-0157) was initiated, and the original Small Farmer Technologies Project was absorbed into it as a central component. The Industrial Development Center (CDI) in the Ministry of Economy

47

(MOE) was chosen as the lead agency for the new project, although the Development and Adaptation Unit (UDA) in MNR continued to play a key role in the new project. Later, a special Office for the Rural Technologies Project (PTR) was established in CDI.

1.2 USAID and GOH Strategies

AID mission strategy at the time the project was initiated called for better use of available resources (natural, human, financial and technological) to achieve growth with equity. Improved technology was the centerpiece of this strategy:

> An integral part of the strategy for agricultural development is the development, adaptation and delivery of appropriate technologies for small farmers. . . [A]ppropriate technology for small rural industries and rural householders is emphasized as an important complementary strategy for reaching the rural poor" (USAID, 1979, p.6).

The strategy of the Government of Honduras (GOH) was best articulated in the National Development Plan for 1979-1983, which emphasized:

> ...increasing employment in the farm sector through the development and delivery of appropriate technologies and; in the industrial sector by increasing availability of technical assistance and establishing an incentives structure for small and medium scale industry which encourages decentralization into rural areas (USAID, 1979, p.5).

AID's strategy was altered only slightly when the Central American Intitiative, also known as the "Jackson Plan", was adopted in the early 1980's. This initiative also emphasizes "growth with equity", particularly by expanding employment opportunities.

The Honduran government's current strategy was spelled out in President Jorge Azcona's inaugural address in January, 1986. He assigned first priority to agricultural development designed to eliminate rural unemployment and make better use of available local resources. He also stressed the importance of small and medium-sized industries in generating employment.

The Rural Technologies project meshes well with the current strategies of AID and GOH because of its emphasis on technology that will help to employ available resources (especially human labor) and because of its focus on the rural poor, which directly addresses the equity issue.

1.3 Project Objectives

According to the original project paper, the main objective of the Rural Technologies Project is to improve the well-being of the rural poor. This is to be accomplished by increasing the incomes of (1) small farmers and (2) rural entrepreneurs, and by improving the well being of (3) rural families through "other than income increasing means" (USAID, 1979, p. 25).

More specifically, the target population is to include farmers with 0 to 30 manzanas (mz) of land, but with emphasis on those with less than 5 mz. It encompasses small rural industry with up to 3,000 Lempiras (Lmp) of investment capital per job created. It is to include rural communities and the rural poor, with emphasis on families with incomes of under Lmp 600 per year.

1.4 Previous Evaluations

An extensive evaluation of the Rural Technologies Project was conducted by Development Associates, Incorporated (DAI) in 1983. This evaluation found that CDI-PTR had developed a unique capability for "reaching its target population, the very poor rural residents". The evaluation further observed that PTR "has put together an optimally effective management team and staff" (DAI, 1983, p.83)

DAI recommended that the credit program be expanded and strengthened and that PTR place more emphasis on improved farming practices. It was recommended that the in-service training program for project staff be improved.

DAI further recommended that the policy of contracting with private voluntary organizations be strengthened, and that closer ties be established with other agencies working in agriculture and rural development. It was recommended that the fiscal process be improved, to reduce the time required for flow of funds. Finally, DAI recommended that consideration be given to re-organizing PTR in such a way as to provide long-term continuity and stability for PTR programs, policies, and personnel (DAI, 1983, pp. 1-2).

In 1984 the AID Regional Inspector General for Audit conducted a revi of the Rural Technologies Project. The report concluded that "...relatively few high priority technologies for agriculture and industry had been disseminated, and...many [of those] reportedly disseminated were not working". In contrast, it found that "...many relatively simple and potentially cost-

reducing technologies for the rural home" had been disseminated (USAID, 1984, p. i).

The audit report recommended improvements in testing, evaluation and training. It also recommended improvements "...to cnsure the smooth functioning of a local currency revoloving fund recently established in an attempt to eliminate the need for dollar advances" [ibid].

The USAID Honduras Mission did not agree with some of the audit findings, particularly not with the funding that many project technologies were "not working". The mission decided to fund a special evaluation to be conducted by an independent team of specialists. Winrock International was contracted for this purpose.

1.5 Objectives of this Evaluation

The explicit objectives of this evaluation are as follows:

-To evaluate the effectiveness of the project in attaining the objectives specified in the Project Agreement. This will place special emphasis on the socio-economic impacts of the technologies introduced. This will include impacts on the viability and profitability of small farms and on the quality of life of rural families participating in the project.

-To determine the extent to which the project has developed the institutional capacity to adopt, develop, test, demonstrate and deliver light capital technologies to small farms, small enterprises and rural families.

-To assess the quality and quantity of services provided by that institutional network with emphasis on the efficiency of private and public institutions to accomplish the project's purpose.

-To assess the progress of the project in implementing recommendations of the 1983 impact evaluation and to determine the extent to which those recommendations have, in fact, assisted in improving the performance of the project.

The methods followed in carrying out the study are described in Chapter 2. The analysis of institutional aspects of the project are covered in Chapter 3. Chapter 4 is a detailed presentation of results of a field survey of farm and household participants, plus case studies of individual rural businesses and industries which have participated in the project. Chapter 5 is the economic evaluation.

92

2. EVALUATION METHODS

In order to meet the objectives of the evaluation as outlined in the statement of work, it was determined that the evaluation methodology should be multidisciplinary and incorporate various scientific methods. Organizational analysis methods were used in the study of the institutions involved in the project; exploratory methods were used in the reconnaissance survey; survey research methods were used to gather data at the field level; field research methods were used in the case studies; and, economic analysis methods were used for the cost/benefit study. All of these methodologies were done separately although they were interrelated at the field level and integrated at the level of data analysis, report writing, and conclusions.

All evaluation designs incorporate some standard for comparison. Experimental design uses longitudinal measuring with pre-and post-testing and comparing changes over time. It also includes an experimental group that has received some kind of treatment as compared to a central group that is treatment free (Campbell and Stanley, 1966). No baseline survey had been conducted in the PTR Rural Technologies Project nor was there a comparison group that had not received technologies. Although experimental design provides a more vigorous method of measuring project results, it was not possible to incorporate it in this evaluation. Nonetheless, a number of items were included to compare the present use of technology with practices of the past and with neighbors that did not use the technology.

Program evaluation design uses as the the comparison point the program goals that were set up at the initiation of the project and the results that have actually been obtained (Miller, 1978). This has been incorporated in the present evaluation design and the assessment of impact will be made on the basis of comparison of the results of field investigation and the original goals of the project.

Field research that is based on case studies offers another type of comparison; an in-depth analysis of how all of the aspects of a given situation fit together (Babbie, 1983). This was also incorporated in the evaluation methodology of the present study.

Cost-benefit analysis compares the benefits of a particular project to the investments or costs that have made them possible (Gittinger, 1982; Weiss, 1972). This methodology has also been incorporated in the present evaluation.

An exploratory reconnaissance survey was an additional aspect that was included in the present evaluation methodologies. The information obtained from this week spent in the field was an important point in adjusting the ideal scientific evaluation methodologies to the realities of the field situation.

2.1 Field Reconnaissance Survey

Several aspects of this study required that a team member visit Honduras to gather data even before the entire evaluation team came together to plan overall strategy and tactical approaches. Some factors contributing to this decision were: the complex nature of the project's involvement in Honduran development; the diverse systems of technology administered by the project; the extensive and diverse geographical nature of the project's commitment; the somewhat convoluted nature of the project's history; and the budgetary and time constraints of the evaluation contract and personnel.

One team member visited Honduras from December 7-14, 1985. During that visit, the following was accomplished:

1. Initial contact was made with representatives of USAID/ Honduras and PTR/CDI.
2. Planning for the survey was outlined and individual responsibilities were assigned.
3. Recruiting and selection of interviewers was begun.
4. Planning for field survey logistics was begun with PTR zone coordinators.
5. Project documents were collected for use by the evaluation team.
6. Field visits were made to various PTR projects.
7. An overall survey strategy was agreed upon by local participants.

55

After the week's activities, the entire survey team met in Tampa, Florida, where the observations and data were digested and distilled into an operational work plan. This process was greatly facilitated by the presence in Tampa of a USAID/Honduras staff person and the PTR Evaluation Officer.

2.2 Institutional Analysis

The method used on the institutional analysis consisted in going through project documents, reports and information bulletins. That was followed by personal interviews with the Manager, the Assistant Manager, and with heads of the different offices such as Information (UCIT), Administration, and Evaluation. Also, the coordinators in charge of program implementation were interviewed as well as field staff assigned to the areas. This procedure covered the whole institution from the top to the bottom.

During these interviews the following aspects were covered: decision making; motivation; conflicts and resolution; team building; goal determination; performance objectives and evaluation; staff (qualifications, years in service, number, etc.); personnel policies (hiring, transfers, training, promotion, firing, etc.); organizational communication; and budgeting.

2.3 Field Survey

2.3.1 Design of questionnaire. The questionnaire used in this evaluation (see Appendix B) provided that all responses be coded numerically for computer analysis. No "open-ended" questions were used in an effort to minimize interpretive errors during the interviews.

Due to the diverse nature of the project, it was not possible to ask in-depth questions on all technologies distributed since the project's inception. The scope of the questionnaire was therefore restricted to those technologies or groups of technologies which offered greatest potential benefits for the greatest number of participants. A review of project history showed these to be: 1) the lorena stove; 2) the grain storage silo; 3) soil conservation practices; 4) irrigation practices. In addition to these major areas, question groups were included covering: hand corn shellers; home soap making, and other miscellaneous technologies.

The technology oriented questions focused primarily on benefit/cost data, perceived benefits, dispersion of technologies to secondary beneficiaries, and adoption or use of technologies as a customary practice.

In addition to the technology related questions, demographic data was included in the questionnaire focusing primarily on individual and

family characteristics; education and literacy; home construction and utility access.

The questionnaire itself was organized (where possible) into a conversational framework to allow for continuity of thought on the part of the respondent. Honduran terminology was used throughout the instrument, and local cultural characteristics were taken into account in the design of questions and responses.

A number of validity checks were imbedded in the questionnaire at various points. These checks consisted of questions about the same subject asked at different points in the interview and in different ways (e.g., "how do you light your house?" and later. "do you have electricity?" or "have you benefited from the project?" and later, "how has this specific technology benefited you?").

Eight drafts of the questionnaire were completed before it was used in the training of the interviewees. During the training process the questionnaire was further refined after internal and (later) field testing. The final form of the questionnaire used in the survey, draft 11, was found to be acceptable after testing with 28 project beneficiaries in four different communities. A copy is enclosed as Appendix B. The test interviews, though complete and valid were not used in the final survey because their selection did not follow the overall sample selection guidelines described below.

2.3.2 Sample size and selection. For a complete understanding of the impact of the Rural Technology Project, it would be necessary to talk to all of the more than 5,000 beneficiaries.[1] This is impossible for many reasons, but a very close approximation can be obtained using a sample of the beneficiary that are selected using scientific probability sampling techniques. Some basic considerations are important in this procedure. First, how much of a sampling error will be tolerable, or in other words how accurate do the results of the investigation have to be? This relates directly to the sample size that is chosen. The second consideration is related to the need to be sure that people with certain characteristics are included in the sample. This is important because probability is based on random selection and unless special precautions are taken, people with special characteristics might not be randomly chosen in the sample (Babbie, 1975; Smith, 1975; Hayes, 1959).

After lengthy discussion of factors to be taken into account in the sample survey, the evaluation team decided upon a systematic, stratified random sample of 300 farms and farm households. It was judged to be possible to interview this number during the 3 weeks alloted for field work, and that it would provide enough observations to obtain a reasonable degree of statistical confidence.

[1]Based on project records with adjustment for survey findings, it is estimated that 8,532 technologies were disseminated under the project during 1980-85. The survey found an average of 1.7 technologies per beneficiary, thus implying that there were 5,018 beneficiaries (see Table 5.2). The beneficiary unit is normally a rural family.

The sampling error with this sample size is estimated at ± 4%. To explain further, if a technology were measured in the survey to be functioning in 65% of the cases surveyed and the sampling error was 4%, we would conclude that if were were to talk to everyone who had used the technology instead of a sample we could find the real percentage to be as low as 61% (65-4) or as high as 69% (65+4). As sample size is increased, the error is decreased so that our survey findings become more accurate, although this advantage diminishes very rapidly when we increase beyond 300 (i.e., doubling the sample size to 600 would only reduce the error to about ± 3%) (Babbie, 1983).

In determining the strata and number of farms or household to be sampled in each strata, expected economic benefits per unit were taken into account. To determine expected benefit per unit, calculations made in an AID/Honduras Benefit-Cost-Analysis (de Beausset, September 1985) were taken into account and modified according to updated observations of Carlos Valle, PTR Director of Evaluation, and Blair Cooper, AID Project Officer.

The final strata, number of cases in each strata universe, percentage of cases in the universe, expected net benefits per case, percentage of cases weighted by benefits, and allocation are shown in table 2.1. Overall, more than 60 separate technologies were divided into the five sampling strata. A detailed list of the separate technologies is shown in Appendix A.

TABLE 2.1. SAMPLE ALLOCATION BASED ON WEIGHTED % OF CASES, WEIGHTING BASED ON EXPECTED BENEFITS PER CASE

Technology*	Estimated Number of Cases	Percent of Cases	$ Benefit Per Case	Weighted Benefit	Weighted %	No. in 300 Sample
1. Domestic Stoves	3,000	28.61	76	21.74	16.80	51
2. Irrigatio	300	2.86	800	22.80	17.78	53
3. Soil conservation/terracing	136	1.30	596	7.73	6.00	18
4. Grain Silos	700	6.68	600	40.05	31.11	93
5. Miscellaneous**	6,350	60.56	60	36.33	28.22	85
TOTAL	10,486	100.00		128.75	100.00	300

* Sample sub-strata and/or total populations (numbers in parentheses) are:

1. Estufa Domestica, (3000)

2. Irrigacion - Noria (150)
   Ariete (50)
   Molino de viento (4)
   Casauete (3)
   Gravedad (100)

3. Conservation suelos-terrazas (136)
   -abonera organica (50)

4. Silos (700)

5. Miscellaneo (6,350)

** Two very important technologies are expected in the other category:

Elaboracion de jabon (2300)
Desgranadoras de maiz (2000)

The strata are 1) the domestic stove (lorena stove), an improved household technology; 2) irrigation, which involves five distinct subtechnologies for improving farm crop production and income; 3) soil improvement, involving at least two distinct approaches to improving farm production; 4) silos for farm grain storage; and 5) a miscellaneous category which includes more than 60 items which relate to either relatively small universes or relatively low expected benefits per capita. Rural enterprise projects will be covered by case studies and were not included in the sample.

The guidelines that were suggested for the selection of the sample are listed below:

1. Prepare a master list of all beneficiaries including all technologies on all zones.
2. Sort the list by key technologies so that a separate numbered list is available for each of the selected strata (key technologies).
3. Calculate the interval size in each one of the strata. (Divide the total cases in the strata by the required sample size for that strata.)
4. Select the first case from the first interval randomly. (By using a table of random numbers or another appropriate method.)
5. Select additional cases by counting every "nth" person in the strata list ("n" = the strata interval number). The strata

67

sample that is selected should be equal to the desired sample size for that strata (plus or minus two or three cases).

6. Follow the same procedure for each of the other key strata. Each strata will have a different interval. Each strata will need a different random start.
7. The total sample selected should equal approximately 300 cases.
8. In case a duplicate name has been selected, go back to the strata list where it was selected as a duplicate and replace the name with the beneficiary that follows immediately in the list.

This procedure was followed in the field and a total of 291 valid interviews were completed.

2.3.3 Selection and training of interviewers. In order to ensure the collection of consistent, accurate, and reliable data, a careful selection and thorough training of interviewers is essential to a survey, and its importance cannot be over-emphasized. The survey instrument is, in reality the combined result of the questionnaire and the interviewer. Intense and in-depth training with the actual survey questionnaire is indispensable to ensure that all persons involved interpret and record spoken information in the same way on the data sheets.

Training of survey personnel took place over a 5 day period during which time the questionnaire was also finalized and field logistics were set up.

The interviewers (three male, three female) were selected from a group of experienced personnel, all of whom has served as field interviewers on rural surveys in Honduras before. All six persons were native Hondurans who had demonstrated an affinity for and understanding of rural society. In addition, they had all demonstrated a high level of reliability as interviewers on other surveys.

It was found that a fair degree of acquaintance and cameraderie existed within the group due to their having worked together on previous surveys. As a result, it was not necessary to employ extensive team building exercises in the training process.

Since none of the interviewers had any experience or connection to the project, the first part of their training consisted of an in-depth familiarization with the concepts, goals, methods, and technologies of PTR. This process was followed by a review of the draft questionnaire (draft 8). This review and revision of the questionnaire continued throughout the training to ensure that the group would feel a personal involvement in the development of the data forms and the conduct of the survey itself.

A series of group and individual exercises were used to develop and reinforce prime characteristics of survey interviewers. These characteristics included: nonthreatening interview techniques; recognition of significant terms and references; consistent recording of reported data; a thorough understanding of the codes, coding, and cross-check processes and a detailed familiarity with the questionnaire.

After the interviewers had reviewed and revised the questionnaire (drafts 9 and 10), and had become thoroughly conversant with it, the group conducted a total of 28 field test interviews in four different communities. The last day of training was taken up with a review of that test experience and a finalization of the questionnaire (draft 11 final form).

Thus, each interviewer entered the field for this survey having had 4 full days of office training and 1 day of field work in addition to their previous survey experience. Furthermore, each began the survey having conducted between five and six real interviews during the pre-test excercise, thus reducing the element of reporting errors often encountered during the first few days of most surveys.

2.3.4 Field procedures. The survey was greatly facilitated by an organized and systematic approach to logistics and field procedures, the principle points of which are outlined below:

> The list of people to be interviewed was randomly selected from the overall list of project beneficiaries as described above in sample selection. This list, broken down by zones,

was given to the PTR coordinators who were asked to contact each person and have them concentrate in groups to be interviewed. This, to avoid the logistic problem of having interviewers seek out each individual in his home, shop, or field, with the subsequent potential loss of time that task implies.

The logistics of transport, lodging, grouping of interviewees, supply of field equipment, etc., was left in the hands of PTR field agents as they were the logical choices to handle these details. Considering the dispersion of the survey sample, complexity of movement patterns, and transport constraints, the field team encountered no major logistics obstacles during the survey.

The lists of interviewees (survey sample) used by the PTR field agents contained registration errors or names of beneficiaries that no longer lived in the area, who had died, who had never existed or who were otherwise unavailable for interview. Substitutes were selected for these "no show" names after it was clearly determined that they could not be located by reasonable means. Selection of these substitutes was the responsibility of only one person, Carlos Valle, the PTR Evaluation Officer. Special care was taken to document each case which required substitution and to select substitutes strictly according to guidelines for sample selection, described above.

The interviewers were often broken down into subteams of two or three people in order to cover more ground in less time. In all cases, a supervisor accompanied the subgroups. It was the supervisor's task to check the questionnaire immediately following the interview while the respondent was still present. This ensured completeness and integrity of data. If there were any doubts as to a recorded answer, the supervisor could call on the interviewer of the respondent to clear-up discrepancies or questions.

All interviews were conducted one-on-one, interviewer and respondent. Care was taken to keep all interviews out of ear-shot (and sometimes out of view) of other parties. This was to reduce as much as possible the intimidation factor of having PTR agents nearby.

Knowing their work was being evaluated, there was a chance that PTR field agents would attempt to "prepare" the respondents and encourage them to give only positive answers in the survey. This problem was foreseen and steps were taken to ensure valid answers from the respondents. 1) All PTR personnel involved in the survey were "warned" in the most direct language possible against "preparing" their beneficiaries. 2) PTR personnel were also informed that respondents would later be visited in their homes and fields by survey team member in order to validate reported data.

66

3) Interviewers were trained to spot discrepancies or overly positive data. They were also trained to ask verifying side-questions if such problems arose. 4) Supervisors randomly chose respondents to further amplify their answers in informal "chats" after their interviews. Comparison (informal, field level) of responses of pre-selected respondents and substitute respondents (who had no chance of being "prepared" by PTR or other personnel) showed no significant difference in recorded data between these groups.

Before coding of questionnaires was begun, each one was subjected to three separate answer by answer checks and review: one, by the supervisor immediately following the interview; and one, by another interviewer checking his buddy's questionnaire.

Beneficiaries who traveled away from their homes to be interviewed were given five Lempiras each to compensate for their lost time.

2.3.5 Data processing. The data steps were planned so that SPSS Computer programming could be used in the tabulation and analysis. Most of the answers for computer tabulation had been precoded although the interviewers used the margins and specially designated spaces on the questionnaire for field notes. Lists of technologies and technology-specific benefits codes were developed to complete the coding process after completion of the interviews. All of the questionnaires were checked in the office after the completion of the survey, the missing values were added and then the data was transferred to the margin code boxes on the questionnaires. The data was entered directly to a computer file from the questionnaires.

2.3.6 Data analysis. The computer programming assistant had been present in all of the planning sessions and was well aware of the kind of data that would be used and the type of analysis required. The pre-test questionnaire data was used to prepare the SPSS program and test it

out. When the final questionnaire and data arrived there were minor changes needed to get the first run. The data was uploaded to the main computer and the first runs were completed immediately.

There was relatively little data cleaning that was necessary so that the frequency tabulation and major cross tabulations were completed in time to be used by the team doing the case studies. Additional cross tabulations, breakdowns, preparation of constructed variables and correlations were completed before returning to the field and preparation of the evaluation report.

2.4 Cases Studies

Studies of shrimp, casabe, cacao, and cashew consisted of a field visit to observe and question briefly to understand what is actually going on in the field. Project proposals, reports, and files of PTR and USAID were read and checked to see if field observations coincided more or less with the project proposal. A short report on each visit was made to summarize observations. These case studies are included in this report as sections 4.4.3 - 6.

2.5 Economic Analysis

The analysis of the economic impacts and viability of the PTR program centered mainly on benefit-cost analysis. However, a number of other economic dimensions, such as employment, income effects, and

linkages to the national and international economies, were also taken into account. The economic viability of rural enterprises (yuca snack food, cacao processing) was analyzed through the preparation of budgets developed from site visits.

On one level, the various technologies which are being transferred by PTR may and should be viewed individually, to see which ones are the most beneficial to individual recipients as well as to the economy as a whole. Thus, an individual benefit-cost analysis was conducted for separate technologies in cases where sufficient data was available to do so. This analysis was made from the point of view of the individual participant.

In evaluating the separate technologies, investment costs were first taken into account. This covered initial costs of equipment and materials, hired labor, and unpaid family labor. Annual costs of operation, maintenance, and repair associated with the technology were also taken into account. Initial costs were converted to equivalent annual costs following standard time value discount procedures (Gittinger, 1982). These were based on the expected life of the investment and an assumed rate of discount (interest). The annualized investment costs were then added to annual operating and maintenance costs to compute total annual costs associated with the technology. Where possible costs were estimated from survey data, but other information obtained from project personnel, project records and documents, and the evaluation team's own field observations were taken into account, as necessary.

Benefits were also estimated from survey data where possible. These benefits ranged in nature from the value of wood saved (by the lorena stove) to family labor saved (by corn shellers), to grai.. losses prevented and grain sold at higher prices (by the silo), and to increased value of crop production (from soil improvement).

For the calculations it was necessary to place a value on unpaid family labor. In benefit-cost analysis this is normally referred to as the shadow wage rate. This should reflect the opportunity cost or value foregone in using family labor. In an earlier analysis of the PTR technologies (de Beausset, 1985), a shadow wage rate of zero was used, which was equivalent to saying that family labor used to build or operate the technologies would otherwise be idle or have no alternative productive use. However, this is clearly not the case in rural Honduras.

While there are some periods of the year (especially in the dry season when crop production is limited) when labor is less occupied than at other periods, there are always a number of productive activities which may be undertaken at any time (land clearing, wood cutting, fence mending). Furthermore, there are also periodic opportunities to work in the coffee harvest in the highlands. Finally, some of the technologies (e.g., soil improvement, irrigation) require additional family labor during the growing season. Taking all of these factors into account, it was decided to use 60% of the market wage as a shadow wage. The survey found an average market wage of Lmp 4.90, and thus Lpm 2.94 was used as

10

a shadow wage. This figure was quite close to the lowest market wages which were reported in the survey.

While it was possible to make explicit benefit-cost analyses for several of the key farm and home technologies, there was insufficient data available to evaluate some, such as irrigation, and it was not possible to make individual evaluations of a wide variety of "miscellaneous" technologies. The latter group included such items as improved ploughs and tool bars, animal production units, bee production, and windmills. The number of such technologies delivered to date was small in most cases, they are widely dispersed, and available data would not support comprehensive analysis.

In addition to the technologies distributed to individual farms and rural households, PTR has worked with a number of rural industries and businesses. While some of the individual businesses were encountered in the "miscellaneous technology" part of the field survey, data on selected industries (yuca snack food, cocoa drying, shrimp raising, and processing of cashew nuts) was collected through special field visits. There is a discussion of the benefits and costs of these industries included in the case studies.

To do an evaluation of the overall benefits and costs of the PTR program, it is necessary to contrast the net benefits of the individual technologies and industries with the overall costs of program operation (Gittinger, 1982). Thus, a general analysis is provided, following the

examination of individual benefits and costs. It was recognized in the original project paper that secondary benefits would accrue as the technologies were diffused and transmitted from the direct participants of the program to surrounding neighbors and villages. As will be shown in the analysis itself, the rate and extent of diffusion are important in determining the ultimate level of economic success.

Besides the benefit-cost analysis itself, a number of other economic considerations are discussed in chapter 5. These related to employment generation, income distribution, and impacts on trade and foreign exchange.

3. INSTITUTIONS

3.1 Institutional Background of the Project

The institutional antecedents of the Rural Technologies Program date back to 1960 when the Technical Industrial Cooperation Center (CCTI) was established, with U. S. funding assistance, as a semi-autonomous agency of the Ministry of Economy (MOE). Its purpose was to increase the productivity of the industrial and commercial sectors of Honduras. CCTI's activities included holding training courses, provision of technical and managerial assistance, feasibility studies, and providing credit for artisan development.

In 1975, CCTI expanded its program to include the selection and use of technologies appropriate to local conditions and resources. In 1979 the organization's name was changed to Industrial Development Center (CDI), and its activities were broadened to include project promotion, technical assistance, and a stronger credit facility for small and medium sized artisanry enterprises. Many of CDI's activities with artisans involved the rural sector.

In 1976, USAID provided funding for the Small Farmer Technologies Project (522-0123) in the Ministry of Natural Resources (MRN). A related seminar held in 1978 led to the conclusion that GOH should accelerate its efforts to improve small farmer technologies and expand its scope of activity to encompass rural industries as well as rural households. Thus, in 1979, the Rural Technologies Project (522-0157) was initiated, and the original Small Farmer Technolgies Project was absorbed into it as a central component.

73

In the original design, the new project was seen as a cooperative effort between CDI, in MOE, and the Development and Adaptation Unit (UDA) which had been organized in Ministry of Natural Resources (MNR) under the small farmer project. In addition, the design envisioned close cooperation between four other agencies located in various branches of the Honduran government.

Two years into the project it was clear that the involvement of six separate agencies made implementation cumbersome, overly bureaucratic and expensive. In 1982, to streamline the project, the number of organizations with managerial responsibility was reduced to two: CDI and UDA. A special unit, Oficina del Proyecto de Tecnolgias Rurales (PTR), was created within CDI to implement the project. At the same time, emphasis was placed on the role of private voluntary organizations (PVO's) in disseminating technologies in conjunction with CDI.

3.2 Present Organization of PTR

PTR is directed by a Manager and an Assistant Manager who report to the Executive Director of CDI (figure 3.1). Overall guidance for the project is provided by an Executive Committee composed of the CDI Director, the AID project manager, and a representative of MNR. The Executive Committee also provides guidance to UDA and helps to coordinate activities between PTR and UDA, since UDA does not fall under PTR administratively. However, at the request of MNR, PTR does administer AID funds for UDA, in order to reduce administrative delays.

Figure 3.1. Organigrama P.T.R.

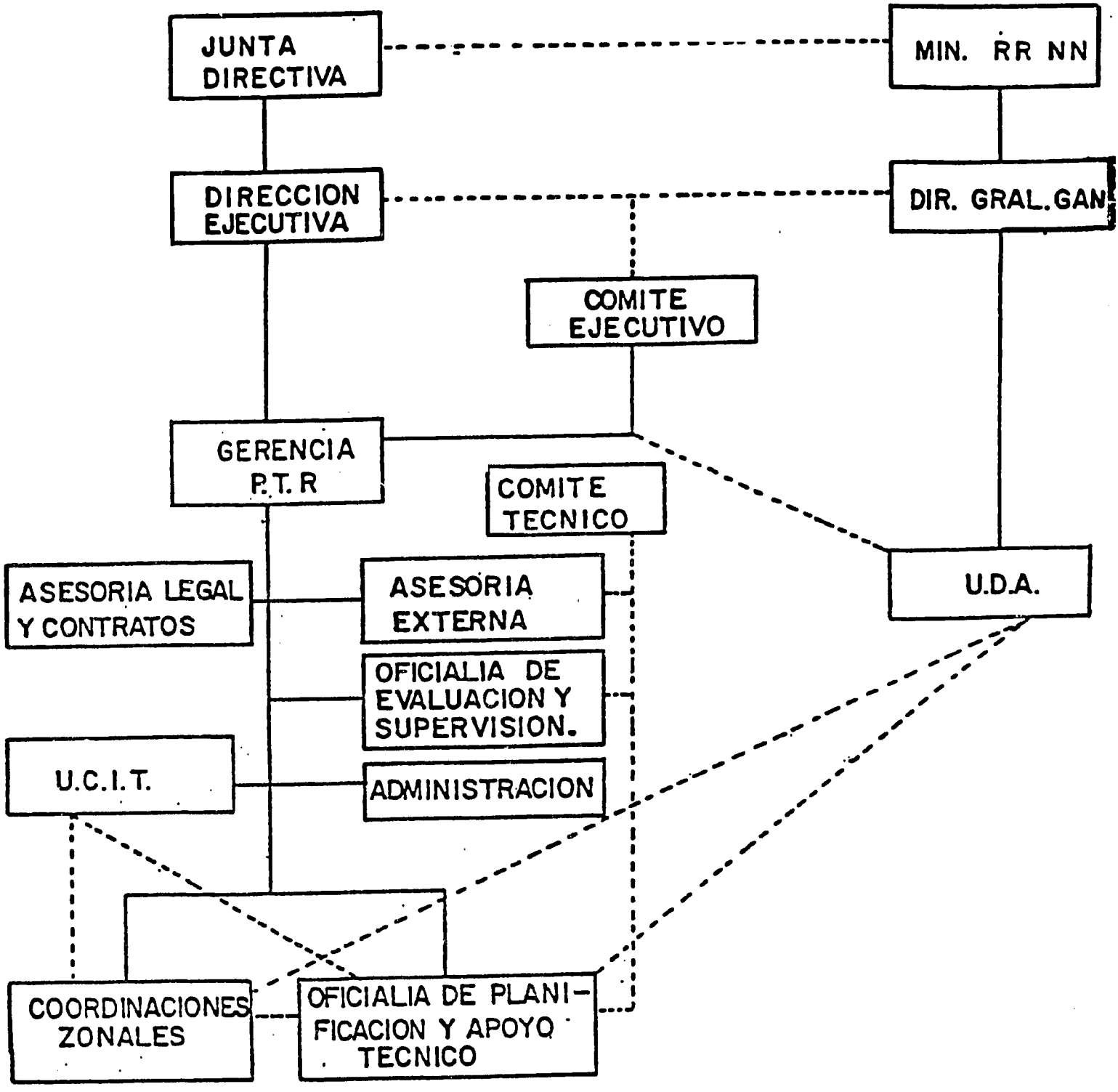

The managers are supported by a staff which includes a Legal Counsel, an Administrative Officer, an Officer for Evaluation and Supervision, and foreign advisers. Field operations are carried out by six Zonal Coordinators, who report directly to the management. An Officer for Planning and Technical Support helps to guide the Zonal Coordinators, but has no direct authority over them. Technical support is also provided by a Technical Committee, foreign advisers, and a Technical Information and Communications Unit (UCIT).

It became clear to the evaluation team during field visits that there is confusion on the part of field staff as to authority and responsibilities of officials in the central headquarters. Some believe that they report directly to the Manager or Assistant Manager on technical matters, whereas others believe that they go directly to the Technical and Planning Officer.

In the opinion of the evaluation team, the Manager and Assistant Manager should be responsible for administrative matters and for overall project direction, but they should delegate the day-to-day responsibility for directing technical operations to a Technical Coordinator. Planning would be a central office staff function and not the responsibility of the Technical Coordinator, thus leaving him/her free to deal with operational matters. Thus it is recommended that the position of Technical Coordinator be created within PTR, following the organization indicated in Figure 3.2.

3.2.1 Staff and Training

Staffing of the various PTR entities is shown in Figure 3.3. The current staff is 159 in number with 62 assigned to the headquarters in Tegucigalpa,

Figure 3.2. Organigram

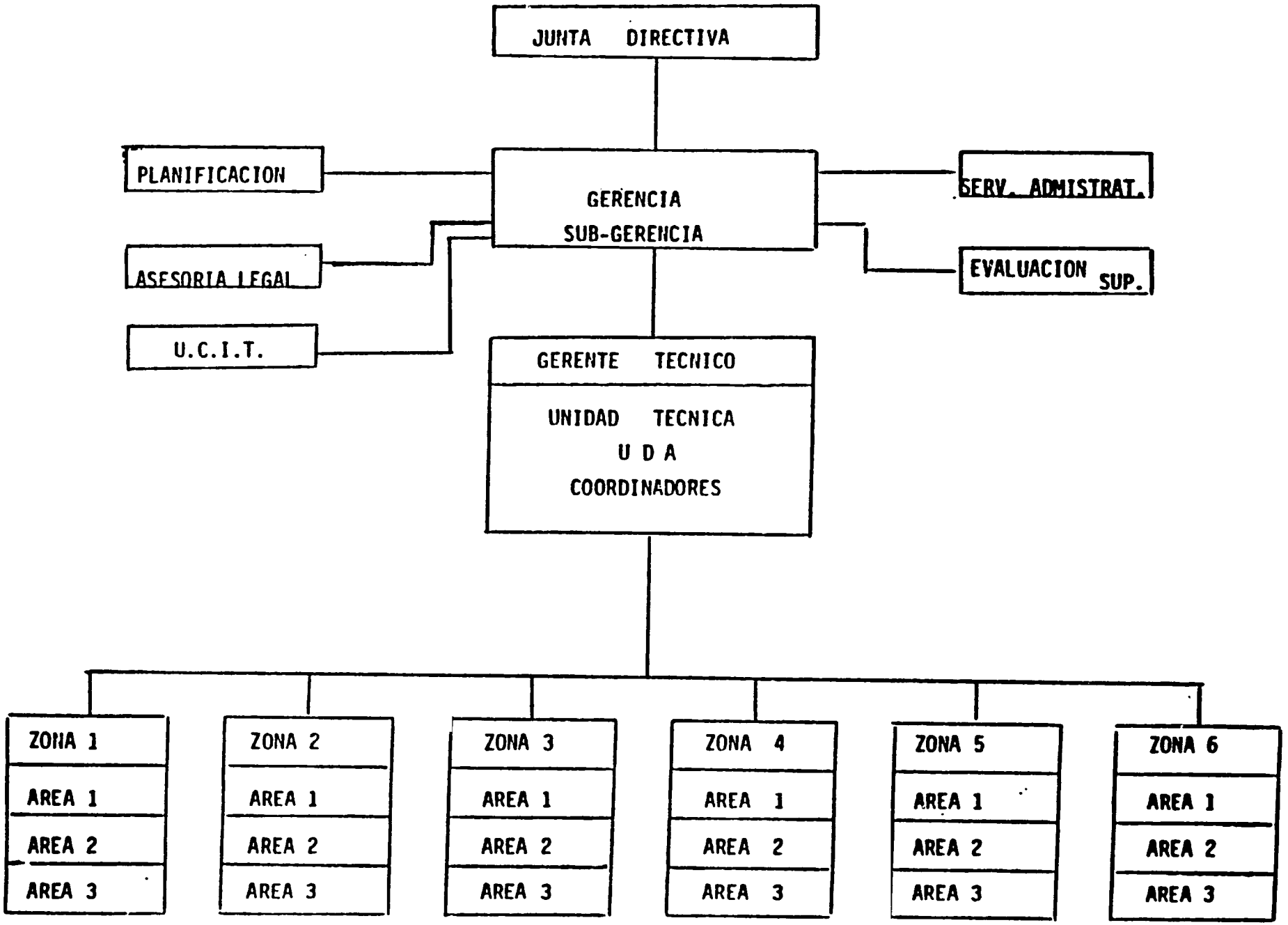

77

Figure 3.3 Staff of PTR by Function and Location

Management (2)

- Manager
- Assistant Manager

UCIT - Communications and Technical Information Unit (12)

- Coordinator
- Specialists in Technical Information (2)
- Documentalists (3)
- Secretaries (2)
- Draw Specialist
- Technical Writer
- Offset Operators (2)

Administration (18)

- Administration Officer
- Assistant
- Accountant
- Secretary
- Accountant Assistants (5)
- Drivers (3)
- Office Boy
- Office Cleaners (3)
- Watch Man
- Reviewer

Planning and Technical Support Office (9)

- Planning and Technical Support Officer
- Agronomist
- Industrial mechanics (2)
- Architect
- Business Administrator
- Social Promoter
- Secretaries (2)

Evaluation and Supervision Office (2)

- Coordinator
- Secretary

Legal Counsel and Contracts (1)

- Coordinator

Other Persons in Central Office (18

Central Zone (12)
Headquarters Comayagua

- Coordinator
- Economist
- Agronomist
- Agricultural technicians (2)
- Rural household promoters (4)
- Industrial technician
- Social promoter
- Small enterprise promoter

North Zone (14)
Headquarters La Ceiba

- Coordinator
- Economist
- Agronomist
- Social promoter
- Household promoter (3)
- Agricultural technicians (
- Small enterprice promoter

South Zone (8)
Headquarters Choluteca

- Coordinator
- Economist
- Household promoter (3)
- Agricultural technicans (2)
- Social Promoter (1)

North Zone (14)
Headquarters Juticalpa

- Coordinator
- Economist
- Agronomist
- Agricultural technicans (5
- Household promoters (3)
- Small enterprise promoters

West Zone (12)
Headquarters La Entrada

- Coordinator
- Economist
- Agronomist (2)
- Small enterprise promoters (2)
- Rural Household promoters (3)
- Agricultural technicians (3)

Paraiso Zone (11)
Headquarters Danli

- Coordinator
- Economist
- Rural Household Promoters (3)
- Agricultural technicians (3)
- Industrial technicans
- Small enterprise promoters
- Social promoters

Other personnel at field level - 25

Totals:

Personnel at Central Office	=	62
Personnel at Field Level	=	97
Total		159

while 97 are assigned to the various zonal and area officers.

The Evaluation Team was impressed by the dedication and hard work of the staff. During the past two years, several agronomists and agricultural technicians have been added, which greatly strengthens staff capabilities in agriculture. In-service training programs held as a part of the introduction of Farming Systems Methodology (FSM) has contributed substantially to the overall understanding of agricultural and rural problems among the staff, including those without specific agricultural training.

The staff is still relatively young and lacks training and experience in certain areas. However, the project has no specific plans for training, nor is there a training officer. It is recommended that a training officer be appointed; this need not be a full time position and could be assigned to one of the existing officers. A training plan should then be developed and updated annually. This plan should stress the continued use of local in-service training.

Until now, there has been relatively little foreign training of staff members. Such training in selected areas would be useful at this time and should be provided. An obvious area of need is to have several staff members, perhaps Zonal Coordinators, visit projects which utilize the Farming Systems approach in other countries. Similar exposure to successful employment of small scale irrigation technology would be useful.

3.2.2 Staff Turnover

A serious problem which PTR faces is staff instability. This stems from two sources. On the one hand, there has been a high rate of turnover among top level managers and key technical staff, reflecting governmental and political changes. On the other hand, project personnel are employed on the basis of relatively short term contracts, thus generating job insecurity.

Current project management has made progress in the area of employment contracts. The contract period has been increased from three months to a year. Since PTR, which was formed for the project, is not considered a permanent agency, the contracting period cannot be longer than this under current Honduran Government regulations.

Instability in top level management and project staff continues to be a serious problem for PTR, and it does not appear that the current government will alter the established system of political appointments which is the root of the problem.

One solution to this situation would be to remove PTR from the government and to establish it as a private voluntary organization or foundation. It is recommended that this alternative be thoroughly explored.

3.2.3 Funding and Flow of Funds

As is discussed in Chapter 5, funding of the rural Technologies Project is derived from both USAID ($9 million) and GOH ($3.87 million), with the GOH

amount including Economic Stabilization Funds. In addition to this, there is a special GOH Economic Stabilization budget ($4 million) established for credit. While the amount of funds available to the project to date has been adequate, there have been continuing problems with annual budget approval and flow of funds.

Annual budget approval problems arise, in part, because AID and GOH are on different fiscal years and budget calendars. With the AID fiscal and budget year starting three months earlier, it is difficult for PTR to know what to expect from their GOH budget at the time they make their annual budget submission to AID.

In part, flow of funds problems stem from fund handling and administrative complexities within GOH. While CDI/PTR is within the MOE, GOH funds are obtained from the Ministry of Finance (MOF), and all AID funds must flow through MOF before reaching PTR. All documentation required for AID funds originates in PTR, is approved by CDI and MOE, and is then passed on to MOF for final review/approval before being sent to AID.

Until 1985, AID funds were disbursed under the advance system, with final documentaton required from PTR before an existing advance could be cancelled and a new advance could be made. Documentation was frequently delayed, however, and as a result advances could not be replenished fast enough to meet project funding needs.

In 1985, a Lmp 900,000 ($450,000) Revolving Fund was established within MOF, using GOH Economic Stabilization Funds, and the system for submitting

documentation of expenditures was simplified. While flow of funds problems seem to be eased somewhat, there are still delays.

The evaluation team reviewed two of the most recent submissions which had prepared by PTR, requesting payment from AID. Some of the expenditures for which PTR requested reimbursement were four months old by the time the request was submitted. Payment from AID still had not been received two and one half months later. AID attributed part of its delay to slow response from a new disbursing office in Mexico City.

To date, it appears that flow of funds problems have been a cause for serious concern, but that they have not presented a critical obstacle to project operations. It is recommended that both AID and PTR sit together to reconsider their procedures and to eliminate unnecessary delays in the funding process, before the problem does become critical.

If PTR were to be removed from the government and reorganized as a PVO or foundation, this should simplify the flow of funds problem because PTR and AID would no longer have to deal through so many layers of bureaucracy. However, as a private agency, PTR might forego direct claims on GOH for budgetary support.

It is recommended that in considering the possible privitization of PTR serious attention be paid to the issue of future funding. There are several sources of funds that might be obtained, in addition to possible continuation

of some AID funding. Other possibilities include grants from one of the banks (World Bank, BID), from the foundations (Ford, Rockefeller, CIID Canada, JICA Japan), from a fund such as IFAD, or from private agro-industries. Possible taxes on certain agricultural products should be considered. Some of the technologies which have been developed under PTR (e.g., improved farm machines) might also provide royalty income.

3.2.4 Technical Assistance

To date, technical assistance has been spearheaded by two resident foreign experts: an Agricultural Advisor and a Small Business and Technology Advisor. The project has benefitted greatly by the fact that both of these advisors have stayed with the project over a long period of time, thus providing very valuable continuity.

The Agricultural Advisor, a native Spanish speaker with extensive knowledge and experience with Central American agriculture, spends much time on the road, helping to coordinate and provide technical support to zonal personnel. He has been instrumental in supporting the implementation of the Farming Systems Methodology (FSM). In order to insure that there is solid continued support for FSM, and to provide needed continuity in technical assistance for the agricultural component of the project, it is strongly recommended that the Agricultural Advisor's position be renewed when his current contract expires in October 1986.

The Small Business and Technical Advisor is intimately familiar with Honduras and its rural technologies. As an AID contract employee, his

64

attention to technical assistance is at times diverted by requirements of project administration. Technical assistance to the project would be improved by assigning the Technical Advisor to work full time on technical assistance, with his office to be located in PTR headquarters.

Other technical assistance has been provided by foreign experts on short term assignments. In some cases, this has entailed making feasibility studies for specific technologies or rural industries. Most recently, a U.S.-based consulting firm, AGRIDEC, has been used to provide a series of workshops for training staff in FSM and related agricultural areas. These workshops have been instrumental in getting FSM off to a good start, and some continued technical assistance of this nature is needed.

Other areas where a short term technical assistance would be useful include marketing, small scale industrial organization, food processing, and small scale irrigation.

In order to improve external technical assistance, the evaluation team suggests that there should be a better integration of technical assistance personnel into the PTR project team. Some PTR field staff now identify technical advisors as outsiders. As a consequence, some recommendations given by them are not always taken into consideration, and full advantage is not taken of the advisors' experience. Assigning the Technical Advisor to work full time in PTR would help to overcome this problem.

3.2.5 Technical Information

The Communication and Technical Information Unit (UCIT) is responsible for finding technical information for project staff and for publishing information folders and bulletins. UCIT maintains contacts with international research centers, and staff members have been trained through VITA in Washington D.C. UCIT maintains a slides library and presents radio programs designed to promote project technologies in rural areas. Each year, UCIT prepares 10-15 new operating manuals which describe the use and technical features of project technologies and makes copies available to the field offices.

The evaluation team was impressed by the quantity and quality of materials produced by UCIT. Nevertheless, it was clear that more coordination between UCIT, project technical directors, field staff and UDA could improve the value of the information which UCIT produces. Without such coordination, it is difficult for UCIT to make the right decisions on which manuals or other materials are most needed, and it is especially difficult for UCIT to keep its materials up to date on the changes which have been made in the latest field models of project technologies.

3.2.6 Planning and Evaluation

Planning and evaluation are particularly critical to the success of the Rural Technologies Project because of the large numbers of people, regions, and technologies which are involved.

Currently, planning responsibilities have been given to the Technical Officer (Figure 3.1), but the evaluation team believes that this impairs the operating capabilities of the technical officer while giving the planning function less attention than it is due. As noted above, it is recommended that planning be established as a separate staff function while a new Technical Coordinator be given direct operational responsibilities (Figure 3.2).

The evaluation team worked closely with the Evaluation Officer and were thus able to observe the project's current evaluation system in great detail There is a system in place for recording the names and addresses of all project participants, together with the technologies they receive. There is also a system for evaluating the benefits and costs generated by individual technologies. Neither system is organized in a very tight or orderly fashon. This is somewhat understandable given the large numbers and diversity of information involved, the rather rapid evolution and changes within the project, and considering that there is but one evaluation officer with a single secretary to do the job.

Annual reports have been based on the monthly reports of technologies disseminated which are submitted by field staff. There is little consistency in the reports from year to year, and it appears that AID has made frequent changes in what it requires from PTR. Economic evaluations are not particularly well designed, and it is often difficult to judge from these how well a given technology is performing. There is little on economic performance in the annual reports.

87

It is recommended that at least one additional person be made available to work with the Evaluation Officer. It is further recommended that record keeping be placed on a micro-computer with a data base management program to facilitate working with the large data sets involved. It is recommended that the Evaluation Officer be given technical support in implementing the computer system and in devising a simple but competent approach to economic evaluation of individual technologies.

It is recommended that a significant number (more than 15) of project participants be selected at random from the project data bank each month and that they be visited by an Evaluation Officer. This visit will serve to verify that they have received the technology reported and will enable the evaluation office to obtain information about performance, including that required for economic evaluation. Questions such as those utilized by the Winrock Evaluation Team (see Appendix B) should be asked of the participants.

Finally, it is recommended that AID review and simplify its reporting requirements. It is not realistic to expect quality of information, given the minute detail that AID currently requires. Less emphasis should be placed on numbers of individual technologies while requiring more information on economic benefits per participant. The latter could be obtained by the improved system described above.

3.3 Institutional Linkages

The success of PTR's program depends on working in cooperation with a variety of other organizations. The evaluation team found that a substantial

number of useful linkages have been developed with other Honduran and international organizations.

For technical support, linkages have been established with the Ministry of Natural Resources, which includes agriculture. MNR agencies of direct importance include the Development and Adaptation Unit (UDA), discussed above, and the Project for Agricultural Mechanization in Honduras (PROMECH). Outside sources of technical information and support established through the Central American Institute for Technical and Industrial Research (ICAITI). The Institute for Professional Training (INFOP), a semi-autonomous GOH training agency, has been used to organize training programs for PTR staff as well as project participants. Relationships have been established with some two dozen PVO's which have been used to disseminate technologies as well as to assist in technological development (Table 3.1).

3.3.1 Linkages to MNR

While UDA is officially a part of MNR, it is an organization that has been developed primarily in support of the Rural Technologies Project, with project funding. UDA does receive some separate support from the British Government in the form of a very capable agricultural engineer, who serves as Technical Advisor. The function of UDA is to help select and develop farm machinery and related farm technologies, to test prototypes, and to adapt such items for local fabrication and dissemination. Once the development of a technology is complete, PTR takes charge of dissemination.

84

Table 3.1 Private Voluntary Organizations

NAME (ACRONYM)	CURRENTLY ACTIVE	PAST ACTIVITY
1. Reformed Evangelic Vocational Educational Center (CEDER)		X
2. Honduran Association of Coffee Producers (AHPROCAFE) - Bee Raising		X
3. Honduran Association of Coffee Producers (AHPROCAFE) - Benefit of Cacao	X	
4. ALFALIT of Honduras		X
5. Agricultural Panamerican School (EAP)	X	
6. Apiarian Technology Center (CTA)	X	
7. South Development Honduran Association (FUNDESUR)	X	
8. Fraternity of Honduras		X
9. American Hand in Hand	X	
10. Plan of Honduras		X
11. San Jose Working Association (ASJO)		X
12. Corquin Limited, Credit and Saving Cooperative		X
13. Bernardo Rivera Cooperative		X
14. San Lorenzo Limited, Multiple Services Cooperative (COSEMUPSAL)	X	
15. Hydroelectric Project Pablo Quintana	X	
16. Evangelic Committee of National Emergency Development (CEDEN)		X
17. Salter Module		X
18. Federation of Honduran Associations of Agricultural producers and Exporters (FEPROEXAH)	X	

Table 3 Continued.

NAME (ACRONYM)	CURRENTLY ACTIVE	PAST ACTIVITY
19. Autentic Federation of Credit and Saving Cooperative (FACACH)		X
20. Peace Corps	X	
21. Agrarian National Institute (INA) Irrigation Project and Agro-Industrial Project	X	
22. National Artisan Association		X
23. Rural Reconstruction Program (PRR)	X	
24. Maya Occidental Cooperative		X

While the two organizations do have a close working relationship, some the confusion of responsibility and conflicts of interest do exist between them. Prioritization of technologies for development, and responsibility for field testing and adaptation are cases in point. Such sources of confusion would be eliminated if UDA were to be merged into PTR, rather than continuing to reside in a separate ministry. While such a merger has been considered in the past, it has never been carried out. It is recommended that such a merger be investigated again at this time.

PROMECH is a separate project financed by the Swiss government and MNR. The objective of PROMECH is to promote the production of agricultural tools and implements in Honduras for use on small and medium scale farms. This includes defining and devloping prototypes, field testing them, developing the technology for fabricating them, promoting decentralized local fabrication, and promotion and commercialization.

Many of the functions of PROMECH coincide with those of UDA. Indeed, the two organizations have worked on very similar pieces of equipment (e.g., ploughs, tool bars), at the same time, in some cases. While there may be some tendency for PROMECH, which is trying to reach medium as well as small farmers, to work on larger implements that are appropriate for PTR clientele, much of what it develops could be used by PRT/UDA, with proper coordination and feedback in the development stage.

In addition to activities which parallel those of UDA, PROMECH also places emphasis on fabrication and marketing. In order to size up market potential for different types of implements, PROMECH has conducted detailed statistical studies of Honduran farming conditions. The PTR/UDA program could benefit from this PROMECH capability.

There has been cooperation between PTR/UDA and PROMECH. For example, the two organizations have exchanged certain pieces of equipment for field testing. However, cooperation between the two entities has not been as close as is desirable. PTR and AID project staff have tried to cultivate a closer relationship, but without success to date. Because of the benefits which a closer relationship could provide to the Rural Technologies Project, it is recommended that higher priority be given to strengthening ties to PROMECH.

3.3.2 Private Voluntary Organizations

Private Voluntary Organizations play an important role in the Rural Technologies Project. As table 3.1 demonstrates, ties to PVO's have been numerous. In principle, PVO's are brought in to help disseminate a technology once PTR has it developed and tested. Project funds are channeled through PTR to the PVO to cover their operating costs, and this saves PTR from having to take on a larger staff of its own.

PTR is undoubtedly correct in taking a cautious approach to PVO's and in wanting to look carefully at each one before deciding to work with it. While there are said to be over 200 PVO's operating in Honduras, their capabilities and experience vary widely. Some are weak administratively, this has

complicated fund administration, and at times it has contributed to the flow of funds problem. Some have close, established working relationships with the rural poor and a good understanding of agriculture, while others are inexperienced.

In some cases, PTR's relationship with PVO's have been extremely fruitful. For example, some PVO's have had technical expertise which has permitted them to cooperate closely with PTR in technology development and adaptation. This has occurred in irrigation development as well as in soil conservation. PTR should be encouraged to seek broader cooperation of this nature with PVO's which have the capability.

The strategy of using PVO's mainly for dissemination is a sound one. These organizations have staff in the field in many areas not in reach of PTR staff. Thus once the technology is adapted and proven by PTR, the PVO's provide a useful means of achieving broader and quicker diffusion.

3.4 PTR'S Operating Approach

As Chapter 4 discusses in detail, more than 60 different technologies have been included, at one time or another, in the Rural Technologies Project. These have been quite diverse, ranging from various household improvements to soil conservation techniques, to several irrigation devices, to different cropping methods, to new production inputs, and also to industrial technologies such as cocoa drying and snack food manufacturing.

94

It was obviously difficult for a young, inexperienced organization to adapt and successfully disseminate such a large number of technologies. During the first few years of the project, there seems to have been no effective mechanism for prioritizing and concentrating efforts on a manageable, coherent sub-set of appropriate technologies. Even when the project was revised and extended in September, 1984, the project paper still identified 20 separate technologies that were to be disseminated in large numbers during the following four years.

The evaluation by DAI in 1983 had suggested that the project concentrate more on improved farming practices, including "how to farm better", and "for those farmers not ready to use new productivity-increasing machinery, there should be complementary emphases on improved seed and fertilizer to increase yields."

3.4.1 Implementation of Farming Systems Methodology

In late 1984, with the encouragement of the AID project officer and the Agricultural Advisor, project management decided to implement the Farming Systems Methodology (FSM) as the basic *modus operandi* of the project. This constituted a fundamental departure from the way the project had been run until that time, and it involved taking certain risks. Since this required that all project personnel be re-trained and re-oriented, there was an inherent danger that momentum would be lost and that it might not be regained in time to insure success by the time the project was scheduled to end in 1988.

95

The term "farming systems" can be misleading since it has been heavily used in recent years and in a number of widely different contexts. The Spanish term, enfoque de sistemas, used by PTR seems to do a better job of capturing the spirit of their approach. The PTR approach to farming systems has been heavily influenced by AGRIDEC, the consulting firm involved in training PTR personnel in FSM.

The PTR approach is that the activities of the farm, the household, and the rural village are treated as a whole system rather than as separate entities. The system must first be understood through the farmer or rural householder who lives there, and problems must be identified in terms of his felt needs. This is a distinct departure from the early years of the project, which would be characterized as more of a "top down" approach, in contrast to the "bottom up" used in FSM.

Another feature of PTR/FSM is that it is multidisciplinary, with conscious effort to integrate the efforts of biological and natural science with those of the social sciences. Thus, each zonal office attempts to work as an integrated team. There is also a concentrated effort to bring in other agencies, such as banks, to cooperate, rather than for PTR to limit itself to its own resources.

In conjunction with coming to understand problems through the eyes of the local resident, PTR is also learning to identify the distinct production systems and circumstances which exist in each region of the country. It thus attempts to design a program which is more appropriate to each region.

Is FSM working? The changeover to FSM began less than a year and a half ago, and at the time the evaluation team visited Honduras it was still too early to give a definitive answer to this question. There is no question, however, that FSM has made a dramatic impact on the project. Staff members discuss FSM with knowledge and enthusiasm. As the analysis in Chapters 4 and 5 demonstrates, there was a dramatic shift in emphasis of project activities during 1985, the first full year of FSM.

PTR staff indicate that FSM has resulted in the project concentrating more on improved farming methods, especially those related to soil conservation. There seems to be more reliance on methods such as composting (aboneras organicas) and terracing which can be carried out entirely with available household labor and without any requirement to purchase off-farm inputs. There is less emphasis on irrigation technology, which many small farms have no opportunity to employ. Lorena stoves and other household technologies also appear to have been de-emphasized.

The other obvious impact of FSM has been in the area of adapting and testing technologies. Now, a technology goes through three distinct stages: testing, demonstration and dissemination. During testing and demonstration, it is used on farms or in villages to observe how well it fits, and resulting findings are used for adaptation and improvement. This procedure is far more systematic than that which was used previously, when attempts were made to disseminate technologies which had not been extensively tried or proven in actual farm circumstances. Under FSM, technologies such as tool bars, which

had previously been considered ready for dissemination, have been placed back in the demonstration or even the testing stage for further development.

FSM is in place and operating, and it has already caused significant changes to be made in PTR's program. There has been clearer and more deliberate focusing on technologies which address problems identified by farmers and rural households.

While training for FSM has been very effective to date, it must be continued if the momentum which has been built up to this point is to be sustained. Until now, training appears to have been directed more at PTR staff than at UDA or PVO's. The role which UDA and PVO's will play under FSM seems to need clarification at this point.

It is recommended that the FSM training program be continued and strengthened and that particular attention be paid to the role to be played by UDA and the PVO's under FSM.

3.4.2 Credit and Payment for Project Technologies

Credit has played a critical role in the project. In the early project years PTR itself administered a credit program with non-project funds, aimed at small machine shops, furniture makers, shoe and dress makers, and an assortment of other rural businesses, with generally excellent results. PTR has also used "credit" (project AID funds with little or no interest charged) to permit the purchase of improved implements and silos, particularly in cases where these were still considered to be experimental. There has been some

reluctance on the part of project staff to promote the use of credit for production inputs such as fertilizer.

The rationale for credit in the project is clear. Incomes in small farms and poorer rural households are thought to average about Lmp 600 per annum. A grain silo costs more than Lmp 150, a water ram can cost Lmp 600, and a water wheel over Lmp 1000. Without access to credit, there is no chance for a poor family to ever obtain such technologies.

Some technologies, such as water wheels, were initially provided to farmers on a trial basis, with the understanding that they would only have to be paid for if they turned out to be successful or profitable. The policy on these "loans" became confused as administrations changed in PTR. In such circumstances, farmers tend to claim that a technology is "no good" because admitting that it is good means that it will have to be paid for.[1] While the conditional leave policy may be fair for technologies which are not fully proven, it can interfere with necessary technology evaluation.

One of the main recommendations of the 1983 evaluation by DAI was that sufficient funds for credit be provided in the project.

[1] The field survey team encountered one vivid illustration of this problem. One participant who was interviewed claimed that his water wheel didn't work and wasn't being used. The next day he was encountered in his field with a working wheel. He admitted that the wheel worked well, but he was afraid that acknowledging this would mean that he had to pay off his loan.

When the project was extended in 1984, $4 million was included for credit. While PTR has made some loans from this fund, the agency was reluctant to take on the direct administration of the entire amount. There was a strong belief that repayment performance would be low if farmers received the loans from a government agency. Therefore, PTR negotiated with private banks to administer the majority of the funds. It took a long time to work out a viable agreement.

As of the end of 1985, with the private bank agreement not yet in effect, only $27 thousand in loans had been made from the $4 million fund. As of March 1986, PTR was just ready to sign an agreement with a large private bank to administer the loans, with assistance in loan application and supervision to come from PTR staff.

The credit program needs to be emphasized at this time in order to help support the overall rural technologies project. Making private bank credit work will require that PTR staff master skills that have not been previously required of them. It is recommended that attention be given to supervised credit activities in PTR's in-service training program. PVO's will also require training in this area, and bank loan officers should also be included in the training program.

3.5 Concluding Observations

The most significant recommendation made in the institutional evaluation is that consideration be given to re-casting PTR as a private voluntary organization or a foundation. At the time of the evaluation team's visit to Honduras, the possibility of merging PTR into other government programs, such as the soils or forestry projects in MNR, was also discussed.

Creating PTR as a special entity outside MNR has permitted it to operate outside normal channels for agriculture and to reach a target group, the rural poor, which has not been successfully reached by most other GOH programs. At the present time, PTR is still a young and fledgling organization. While results so far have been good, it must be recognized that PTR has yet to develop the strength it will need for longer term survival. Its identity and purpose could easily be lost by merging it into other MNR programs at this time. In several more years, the question should be reconsidered.

4. IMPACT ON RURAL HOME, SMALL FARMS, AND SMALL FARM BUSINESS

4.1 Overall Description of Beneficiary Population

The survey sample was drawn from the total population of PTR beneficiaries recorded since the project's inception. The first clients to be recorded dated from 1981 and the most current records available -- through the end of 1985 -- were included to create as complete a list of beneficiaries as possible. During the evaluation's reconaissance survey, it was determined that no single list of beneficiaries existed. Names and numbers need to be distilled from the records of various agencies as well as PTR before a coherent list could be produced.

The master list was stratified according to zone and technology groups. A summary of this stratification is included as table 4.1. Beneficiaries are divided into two separate time groups (1981-1984 and 1985) to reflect substantial mid-course adjustments to the project's focus and direction in late 1984.

A review of table 4.1 shows a strong emphasis in the project's early days on grain silos, lorena stoves, small businesses, and irrigation technology. Relatively little substantive attention was paid to the development of small rural industries. A good deal of effort, however, was spent in the development of small rural business. The evaluation team found that this was a demonstrably strong facet of the project. The level of effort appears to have changed considerably

102

Table 4.1 Technology Groups Described as Percentage of Total Technologies disseminated During Time Frame.

Tech. Group	1981-1984 No. of Technologies*	% of all Tech for Period	1985 No. of Technol.*	% of all Tech for Period
Farm Techs:				
Silo	801	10.8%	83	3.0%
Soil Cons	113	1.5%	288	13.4%
Irrigation	389	5.3%	6	0.3%
Corn Sheller	975	13.2%	0	0.0%
Misc. Farm Techs.	405	5.5%	1094	50.8%
Home Techs:				
Stove	3430	46.4%	371	17.2%
Soap	571	7.7%	18	0.8%
Industry:				
Small Business	602	8.2%	29	1.4%
Shrimps	1	0.1%	150	7.0%
Cashew	0	0.0%	12	0.6%
Yucca	50	0.7%	50	2.3%
Cocoa	52	0.7%	52	2.4%
Total	7389	100.0%	2153	100.0%

* These were the numbers expected, based on PTR records available at the start of the field survey.

during 1985, particularly in the areas of irrigation and silos. Discussions with project personnel suggest that these changes reflect the training and start-up periods required during the adoption of the Farming Systems Methodology by PTR, early in 1985.

Sharp decreases in the dissemination of the lorena stove during 1985 probably reflect the early attainment of the numerical objectives of 2,000 stoves for the life of the project. This goal was set down in the revised project paper (USAID, 1984). The evaluation team's findings indicate the goal had been not only reached but indeed surpassed by a wide margin.

No specific demographic data was available on the beneficiary population but it was expected to conform to the general descriptions of the rural poor of Honduras with low levels of literacy, sanitation, and living standards.

4.1.2 Characteristics of the people interviewed. There were a total of 291 people interviewed in the survey. These were distributed throughout the country and came from all of the six zones where the program has been working. Both men and women were interviewed and a rather wide age span was covered. As can be seen in Figure 4.1 there were 199 men interviewed and 92 women. The average age of those interviewed in the total sample was slightly over 41 years old. Most of those interviewed were married (55.7%) or in free union (25.4%). Figure 4.2 shows that there also were a few widowed (3.1%), divorced (1.4%), or

104

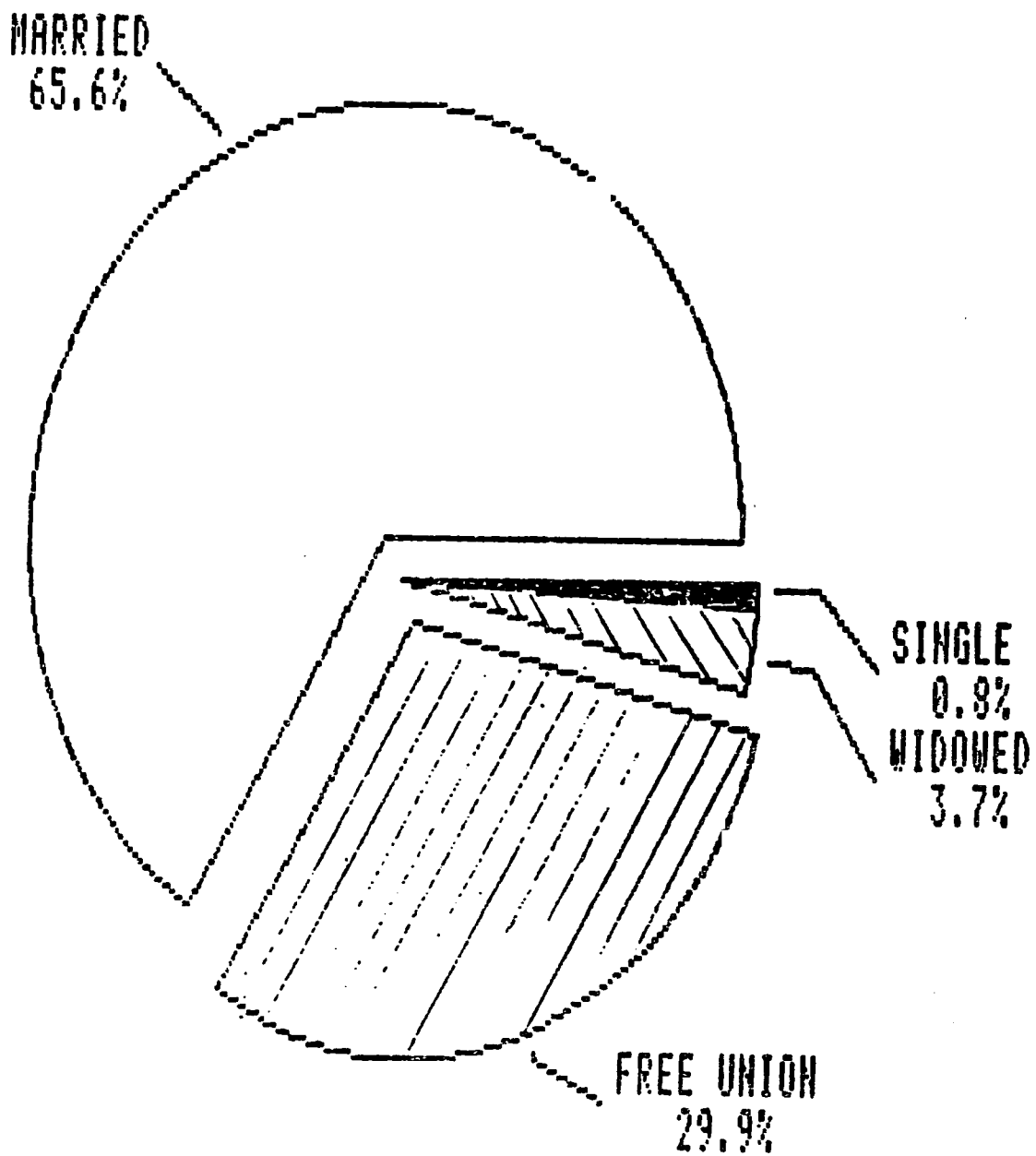

4.1 Marital Status of Survey Respondents

105

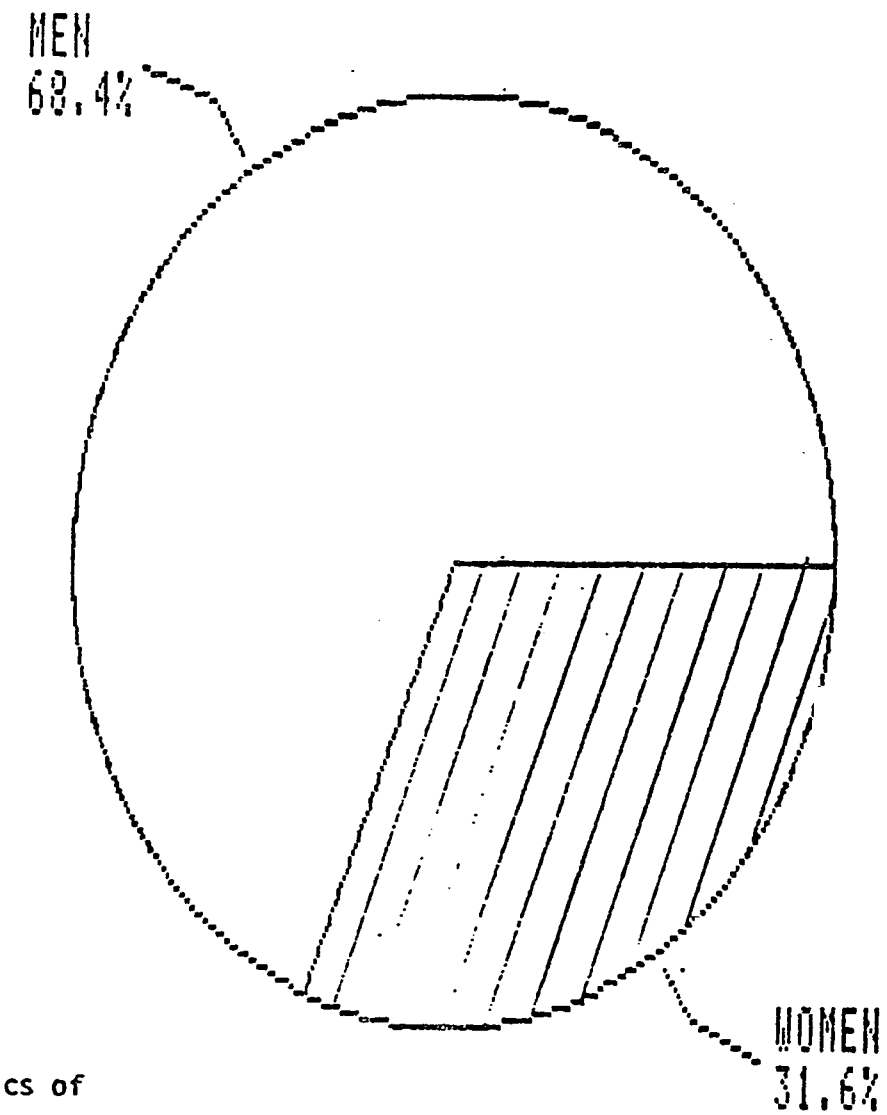

4.2 Sexual Characteristics of Survey Respondents

single (0.7%). The literacy level for the whole sample was 81.8%. See Figure 4.3. The variations by zone can be seen in appendix table I.

The average size of households was 6.6 for all areas combined. There were radios reported in 74.2% of the homes. Electricity was reported in 23.7% of the homes (Figure 4.4). There was an average of 2.9 rooms per home although almost 40% of the homes had only one or two rooms. (See appendix table 2 for variations by zone.)

Additional characteristics of the homes are listed below:

1.	Have sewing machines	37.5%
2.	Have refrigerators	15.1%
3.	Have electric lights	24.1%
4.	Have sanitary toilets	17.5%
5.	Have running water	63.6%
6.	Have tile roofs	70.1%
7.	Have adobe walls	51.5%
8.	Have dirt floors	49.1%
9.	Own their homes	86.2%

The survey also indicated that 74.8% of the respondents own their farms and more than one-third (35.4%) are members of a cooperative or community organization. The average day's pay in the home communities of the respondents was 4.90 Lps.

107

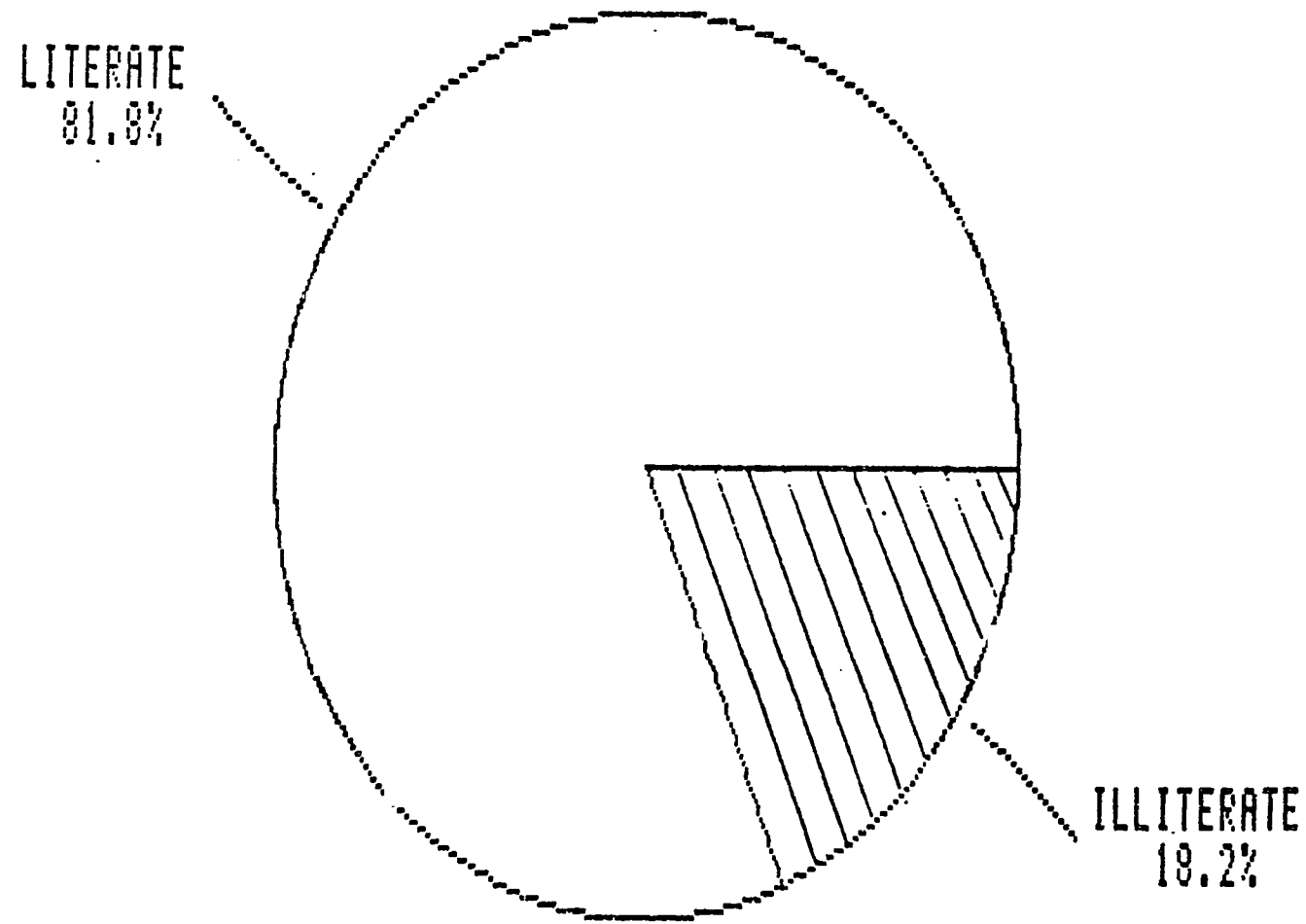

4.3 Literacy Level Reported By Survey Respondents

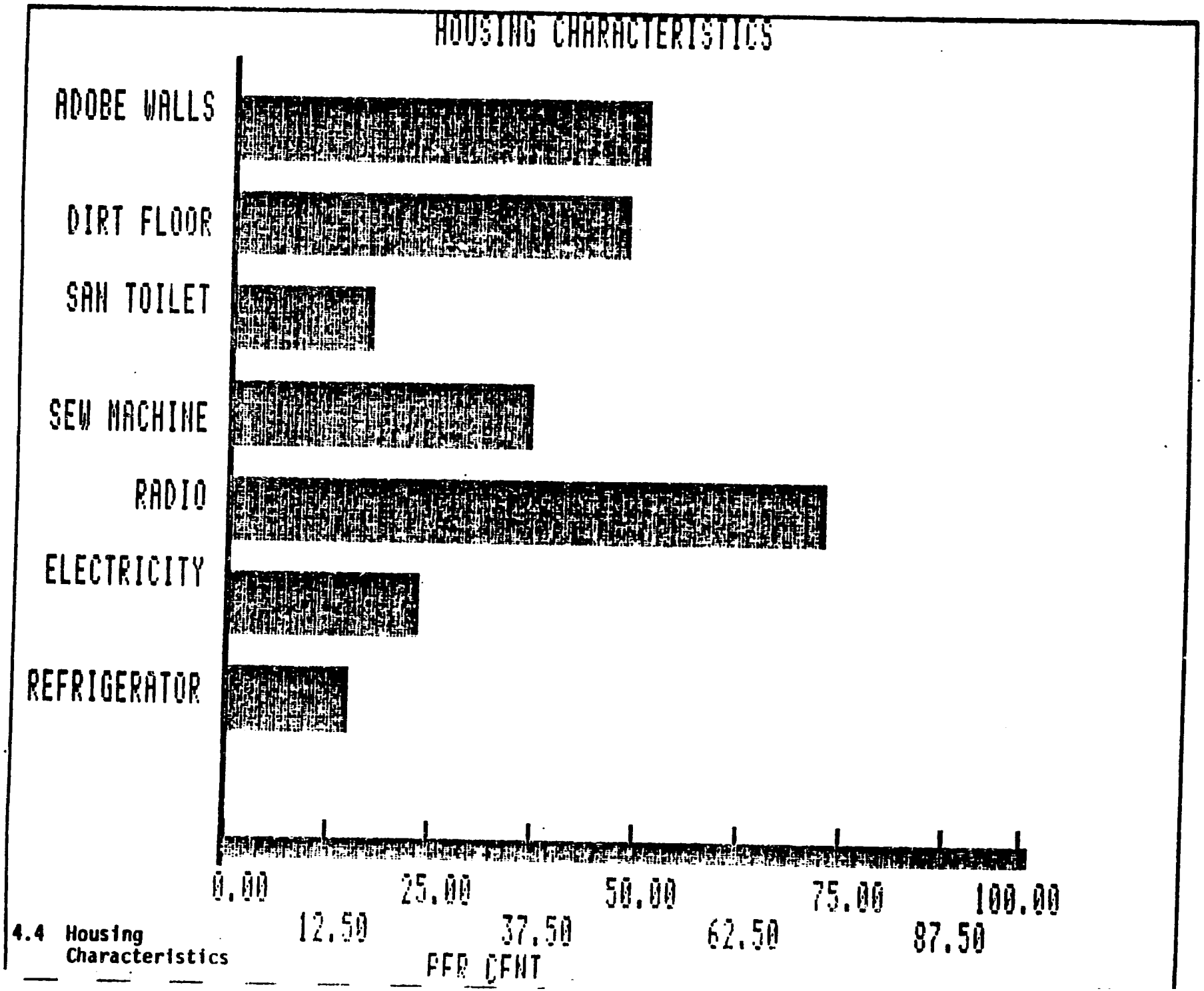

4.4 Housing Characteristics

104

Many of the characteristics of the survey sample compare well with those that are expected for the proposed target group. However, the literacy and educational levels, as well as the number of radios, sewing machines, and refrigerators are all higher than would be expected.

4.1.3 Characteristics of the technologies. In order to assure that the most common technologies in the program were included in the interview sample, the interview lists were stratified to include key technologies. The improved kitchen stove was reported by 145 of those interviewed; this was followed by the grain storage silo (82), irrigation (62), the hand corn sheller (44), soil conservation (42), and soap making (35). A number of the other technologies were also mentioned: French drain (14), latrine (8), dry latrine (5), solar grain dryer (6), sofa/bed (6), casabe stove (4), and forage silo (3). The remainder of the technologies (there were 42 different technologies that were reported during the interviews) were mentioned by only one or two persons. The average number of technologies per person interviewed was 1.7. (See appendix table 4.)

The respondents were asked which month and year they first started to participate in the program. The average number of months is listed by zone as follows:

Zone	Average months
1. Paraiso	48.8
2. Sur	60.4
3. Olancho	38.6
4. Central	41.8
5. Occidente	52.7
6. Norte	32.5
All zones average	45.8 months

There appears to be more participation since 1983, with 90 of the 291 reporting that year as the initiation point and then another 65 in 1984 and 64 in 1985. This means that over 75% of the respondents started in the program during and since 1983. The actual year in which they began can be observed in table 5 of the appendix.

The number of different technologies initiated each year follows much the same pattern as that of beneficiary participation. There were a total of 489 technologies reported in the survey and the highest proportion were introduced in 1983 (32.7%); this was followed by 1984 (26.2%) and then 1985 (18.0%). (See appendix table 6)

The respondents were asked how often they were visited by a promoter or agency representative. As can be noted in Figure 4.5, over one-half of those interviewed indicated that they were visited at least monthly (see also appendix table 7). The frequency of reported visits was related to other aspects of beneficiary participation. Those

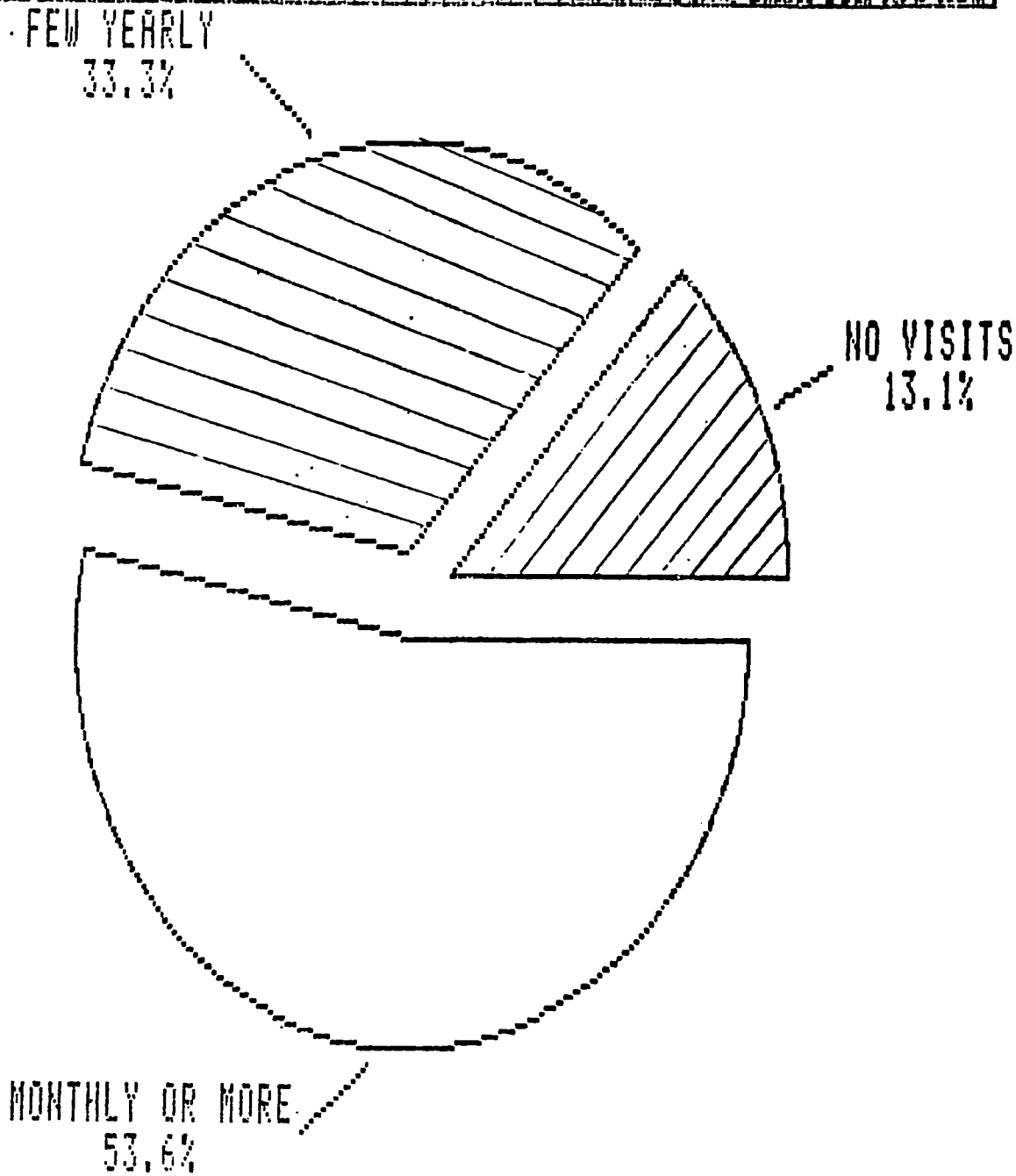

4.5 Frequency of Promotor Visits Reported by Survey Respondents

that were visited more often also reported higher levels of perceived program benefit ($r = .195$, $P<.001$) and level of use of technologies ($r = .103$, $P = .04$). There was a significant negative relationship of total months of participation and reported frequency of visits ($r = -.110$, $p = .03$). In other words, frequency of visits is evidently higher for persons who have been participating less time.

The respondents were asked if they had adopted the technology and if so how often it was used. The answers were combined to form a use score: 2 signified "never used," 3 "sometimes used," and 4 "always used when appropriate".[1] Stoves and soil conservation had high scores. Irrigation, corn shellers, and grain storage silos rated slightly lower. The soap making technology had a low use score with 14 of the 31 respondents indicating that they had "never used" the technology. The other technologies (latrines, dry latrines, French drains, and those listed under "miscellaneous") had varied use scores although the number of respondents is relatively small in each case. (See appendix table 8.) The conclusion to be drawn from these results is that most of the technologies are used at high levels -- i.e., they are "working."

A number of questions were included in the survey to probe the level of perceived benefit of the Rural Technology Program among the beneficiaries. The responses to these questions were combined to form a

[1]"Where appropriate" was used in recognition of the fact that some technologies are associated with a season or, for other reasons, are not designed to be used every day. For a respondent to say that he always used his water wheel where appropriate meant that he always used it when needed during dry periods.

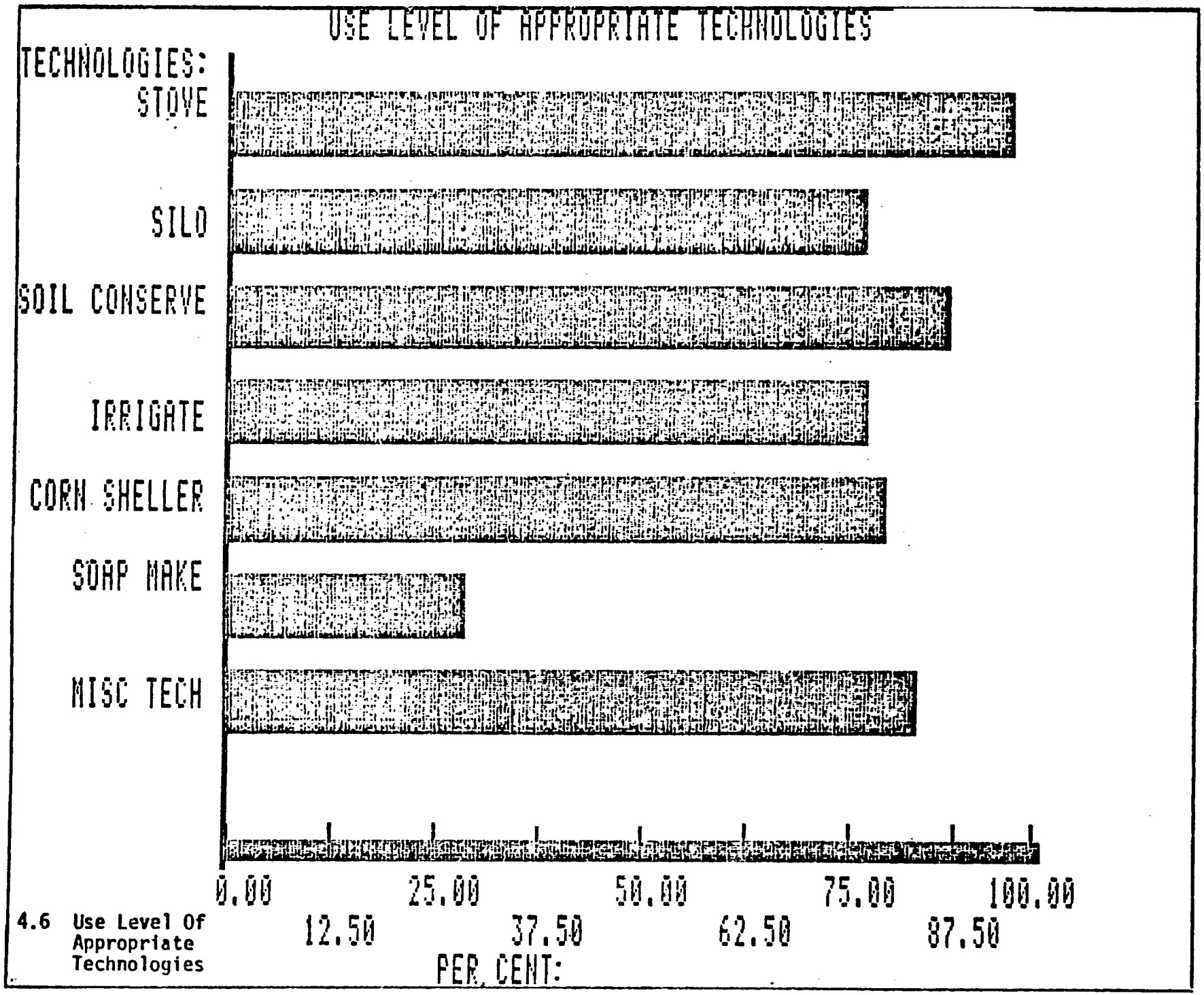

4.6 Use Level Of Appropriate Technologies

114

general perceived benefit score. The overall score for the total sample was 16.3 on a scale of 6 (little benefit) to 19 (high benefit). The conclusion here is that most participants perceive fairly high benefits from the use of their technologies.

The perceived benefit response was compared to other responses, and a positive and significant relationship was found with:

1. Level of technology use ($r = .226$, $P<.001$)
2. Visit of program representative ($r = .196$, $P<.001$)
3. The fire wood saved ($r = .150$, $P=.04$)
4. Perceived stove benefits ($r = .286$, $P<.001$)
5. Perceived silo benefits ($r = .403$, $P<.001$)
6. Perceived soap benefits ($r = .403$, $P=.04$)
7. Perceived misc. technology benefits ($r = .286$, $P=.01$)

There was a negative significant relationship of perceived benefits when correlated with age ($r = -.123$, $P=.02$). No significant relationship was found with length of participation, general levels of living, family size, or literacy.

4.2 Impact of Farm Technologies

4.2.1 Silo grain storage technology. There were a total of 80 silos that were reported by the sample respondents. These were unevenly distributed in the different zones with most of them reported in zones 3 (Olancho) and 5 (Occidente). The pattern of silo adoption is much like

115

that of the other technologies in that most of them were adopted in 1983, 1984, and 1985. The average use time for the entire sample is 42.4 months. Many of the silos that were adopted in 1985 had not yet been used for grain storage at the time of the survey because the crop was not yet harvested or because the dry weather had left them with little corn to store (see appendix table 9).

The average cost of the silos was about Lmp 150 although there was variation between zones and according to size. The majority (85.0%) of the silos reported were of galvanized metal although there were 15.0% of silos constructed of concrete.

The source of the silos was reported as follows:

- Bought from PTR or related agency 57.5%
- Bought from a commercial seller 25.0%
- Obtained without cost 13.8%
- Self constructed 2.5%

Most of the farmers (82.3%) reported that they had stored their corn in their houses in husk before obtaining a silo. This was true in all zones. With this method of storage there was an average reported loss of 5.9 quintals per farmer, where the quintal (qq) equals 100 pounds.

The reported amount of grain stored in the silos averaged 16.3 qq for the country as a whole. The present grain losses were small when

116

compared to the previous losses. On average for all silo users the losses were reported as 0.4 qq per farmer as compared to the previous losses of 5.9 qq (see appendix table 10).

Each of the respondents had an opportunity to express their ideas about the specific benefit of the silos. There were 123 benefit responses broken down as follows:

1.	Less grain loss	54.5%
2.	Better grain price	17.9%
3.	Takes less space	11.4%
4.	Convenient	7.3%
5.	Can replant	1.6%
6.	Other reasons	4.1%
7.	No benefit	3.3%

Technical aspects of silo: The silo's major impact is reduced insect and rat damage in storage. This results in a small surplus of grain after family subsistance requirements are met. There is one serious negative impact of silos which will occur if grain is stored at high moisture. The entire silo will spoil due to heating, fermentation, molds, and(or) bad odor which makes the grain unsuitable for consumption. Interview teams did learn of a few cases of spoilage, which underscores the need for careful training of recipients.

Economics of the silo: Silo benefits accrue essentially in two forms, reduced storage loss and increased prices recieved for grain

117

which can be saved longer and sold at a higher price. Survey respondents reported that they had lost 5.89 qq of grain with their traditional kind of storage, before the silo, but that with the silo, they averaged only 0.4 qq of loss. When adjusted to reflect the 7.8% of owners who were not using their silos, the annual savings amounted to 5.06 qq. When valued at the average market price of Lmp 13.60, this amounted to an annual savings or Lmp. 68.81.

There was also an average of 3.72 qq of grain sold at a higher price with the silo, with the average increase in price being Lmp 5.76 per qq; the total increase in sales value was thus Lmp 21.42. Total benefits thus amounted to Lmp 90.23 (68.81 + 21.42).

Silos come in different sizes and prices vary somewhat according to region. The most common 20 qq size sells for around Lmp 160 in most cases, with the value increasing to Lmp 170 when allowing for transportation. In addition to approximately Lmp 5 for fumigant pills used each year, the family will probably have to spend at least three days in cleaning and drying the grain before storage. Assuming that it will last 10 years, the silo investment represents an equivalent annual cost of Lmp 30.61, and a total annual cost of Lmp 44.43. Net annual benefits of the silo are Lmp 45.80 (90.23 - 44.43).

The <u>overall conclusion</u> on the silo is that it is a good technology with substantial net benefits. It is valued and well received by project participants.

118

4.2.2. Soil conservation technology use. There were a total of 83 individual practices reported by the 37 farmers that were using soil conservation technology, and many farmers were using more than one of these technologies. There were ten different types of soil conservation technologies reported. The two most common were catchment ditches and composting. Appendix table 11 shows the different soil conservation technologies that were reported and the years of adoption. As can be noted in the table, soil conservation technologies were introduced relatively recently, with the majority in 1984 and 1985.

The farmers that were using conservation technology reported an average of 2.0 manzanas for area of application. Some of the farmers were working in groups, so a further question was asked to determine the land area that is being worked on an individual basis only. There was an average of 1.4 manzanas of land under conservation practices that were being worked individually.

A number of specific benefits were mentioned by the respondents. The benefit most often mentioned was "more production," also frequently mentioned were "prevents erosion" and "maintains and improves soil."

Technical aspects of soil conservation. Soil conservation has the immediate impact of creating jobs. In the extreme, every person in Honduras could be fully occupied terracing, ditching, building stone walls, making compost, etc. Data from Ing. Carlos Valle of PTR indicate the following labor requirements:

Hillside ditches:

25 m/manday by man alone

72 m/animal and manday by man and traditional plow

150 m/animal and manday by man and PROMECH plow

Terraces:

10 m/manday with pick (piocha)

Contour strip of grass or shrubs:

0.5 mz/manday

Contour strip of stones and dead sticks:

10 m/manday

Present costs are 5 Lmp/manday and 10 Lmp/animal day.

The existing soil erosion and poor soil problems will take a long time to solve, and soil conservation does not provide an immediate wage for the labor input. Conservation of water, soil, and plant nutrients will result in better and more stable yields to the farmer, increased land values, less silting of streams and reservoirs, and less flooding of streams. Benefits also accrue to the general public which encourages at least partial public support of soil conservation projects.

Hillside ditching is one of the most common practices in the present PTR projects. Water and top soil are captured in the ditch and utilized by crops or fruit trees which are planted in the ditch bottom. In areas of low rainfall, this has an immediate payoff in better yields of these plants. Careful annual repairs and expansion of the ditch will gradually result in bench terrace with complete control of water and

120

soil. A reversible hillside plow would greatly assist in this benching operation as labor alone must work for a very low return to provide a benefit-cost ratio above 1.0.

Compost has an impact of increased production and job creation. The low nutrient value of the compost is partly enhanced by an increase in soil organic matter. However, the carbon-nitrogen ratio of a straw-manure mixture may temporarily tie up soil nitrogen and can actually lower crop yields in the short run. The organic matter that roots and fodder leave when commercial fertilizer is used is needed for good yields. An important consideration will be the return to labor for collecting and distributing an adequate quantity and quality of compost. It is doubtful that an adequate tonnage of compost is available at any price to cover all of the farm area that could benefit from it -- it just takes too much labor and too much organic matter.

Chemical fertilizer. The current emphasis in the Rural Technologies Project, perhaps deriving from an overly-zealous adherence to the Farming Systems "philosophy," is that compost is the preferred method of fertilization. If not discouraged, chemical fertilizers are at least not widely promoted. Some PTR staff claim that they result in credit dependency for smallholders.

Available data indicates that returns to chemical fertilizers are probably quite high under circumstances similar to those encountered in the Rural Technologies Project. The PROMECH study (1985, p. 40)

indicates that maize yields are increased by 87% where fertilizer was used in conjunction with animal traction. The Natural Resource Management Project evaluation indicates that maize yields were more than doubled when compost was used in conjunction with chemical fertilizer and other improved practices (NMRP, 1986, p. 28).

Plows are not usually considered in the category of soil conservation but they are related to soil improvement. Plows would be expected to have a labor saving impact over manual land preparation with a hoe. However, recent data (PROMECH, 1985, p. 36) show no displacement of labor between strictly manual maize cultivation and when animals are used with manual labor. Yields and net income were much greater when animal traction supplements manual labor and when fertilizer and other inputs are added. From 49% to 77% of the basic food crops of maize, beans, rice, and sorghum are manually cultivated while 5% to 14% also use animals (PROMECH, 1985, p. 34).

The improved animal drawn plow can make a significant impact in small farm, hillside agriculture in Honduras. PTR has yet to identify the most appropriate plow, perhaps because the superiority and popularity of the UDA PROMECH plows has not yet been fully proven. Nevertheless, PTR should accelerate its efforts to identify a suitable plow and integrate this in its soil conservation and improved farming practices.

122

Economic aspects of soil improvement. As noted above, soil improvement may entail any one of a number of different practices, depending on what the circumstances of a particular site calls for. The benefits derived from these practices often build up with time and may not be seen in the first year or two. Considering that almost half of the 43 soil conservation respondents in the survey had started the practices in 1984 or 1985, benefits they reported may be lower than they would find later on.

Increased production and yields were among the main benefits reported in the survey. In 16 cases farmers reported that corn yields rose from 8.64 qq per manzana before the improvement to 16.54 qq after, an increase of 91%. Eleven farmers reported bean yield increases of 3.41 qq, which represented a 59% above their prior levels. On average, farmers managed to practice conservation on 2.03 manzanas, with 0.47 of this being new land. For all soil improvement farmers in the sample, increases in income averaged Lmp 517. Of this, Lmp 184 was derived from new land that soil conservation enabled them to put into production, whereas Lmp 334 was derived from improvements on land already in production. Fifty percent of the farmers indicated that soil improvement enabled them to get a second crop from at least part of their land.

Cash outlays for soil conservation are relatively low. Sample farmers reported Lmp 31 for materials and Lmp 36 for hired labor in their initial year. In subsequent years, these costs were reported to be somewhat higher, with material amounting to Lmp 74 and hired labor

123

Lmp 19.65. Family labor averaged 12 days in the start-up year and 10.1 days in later years. In addition to this, the farmers used an estimated 60.9 days of family labor for the additional cropping activities which conservation makes possible. Assuming that the soil conservation benefit continues for at least 20 years, the average annual cost is Lmp 316. Of this, Lmp 137 is for the conservation per se, whereas Lmp 179 is for the family labor put into increased cropping activity. It is important to recognize that the benefit cannot be reaped from just the soil conservation practice by itself but that it also comes from the extra labor which goes into new land cultivation, into double cropping, and into harvesting higher yields.

Subtracting the cost from the benefit, net annual benefits per soil conservation participant are estimated to be Lmp 202 per year. In summary, soil conservation practices are seen to be quite beneficial. They rely on relatively few off-farm resources. These practices are quite diverse, however, and they merit further individual study by PTR.

4.2.3. Irrigation technology use. There were a total of 57 beneficiaries that reported using irrigation technology. Two of these had discontinued the practice, leaving 55 using the technology at the time of the survey. The irrigation users were located in only four of the zones: Paraiso, Olancho, Central, and Occidente.

Many of the respondents listed more than one irrigation-related technology with a total of 63 irrigation techniques in use for the

participants surveyed. The "noria" (water wheel) was the one most often mentioned (29 cases) and then gravity canals (28 cases). Other irrigation technologies (see Appendix A) were mentioned only a few times.

Most of the irrigation technologies were initiated in 1983, 1984, and 1985, although 5 of the 29 water wheels were installed before then. The average time of use was 48.1 months. There was considerable variation in use time between zones as can be seen in the following list:

Paraiso	60.2 months
Olancho	56.4 months
Central	26.7 months
Occidente	50.3 months

The average amount of land irrigated was 2.9 manzanas. Not all of the irrigated was in individual plots. The individually worked irrigated land averaged 1.2 manzanas.

Each one of the respondents that was using irrigation was asked what benefits the technology had brought. There were 83 responses, counting as many as three different types of benefits for some of the farmers. The benefit most often mentioned was "increase in production and income" (43 responses). Other important benefits were "to diversify plantings" (10) and "to plant vegetable crops" (13). Savings in time (6) and fuel (5) were also mentioned. Those that mentioned fuel savings had previously been irrigating with motor driven pumps.

125

Technical aspects of irrigation technology. The water wheel's main impact is increased production during the dry season and possibly some supplemental irrigation during the wet season. Income and work for the farmer would increase due to more dry season cropping. If the farmer had been using a small gasoline engine pump for irrigation then a reduction in costs would result since waterpower replaces gasoline. Indirect beneficiaries are consumers who have vegetables or other crops that would normally not be produced and marketed during the dry season.

A water wheel or noria sells for about Lmp 1,600 and will lift about 30 gpm of water 10 to 15 feet from a swift mountain stream to irrigate over one hectare of land adjacent to the stream. Where all conditions of swift stream, low banks and suitable adjacent land exist then the noria provides irrigation at low initial capital costs and low operating costs. All suitable sites for norias should be economically irrigated within a few years as the noria is superior to small pumps or to larger gravity projects in steep, narrow valleys.

A small gasoline pump equivalent to the noria would cost about Lmp 1,200 to purchase and would use about 1,000 hours of operation per Manzana. The gasoline engine obviously costs more than the noria. Gravity irrigation projects are normally government projects with high capital and operating costs. Project investment costs alone could easily run Lmp 4,000 to 10,000 per manzana. However, these costs are seldom charged to the farmer.

Irrigation costs and benefits. Irrigation is similar to soil conservation in many respects, particularly in that it makes land more productive by either permitting production for the first time, by permitting double cropping, by increasing yields, or by permitting conversion to higher valued crops (e.g., vegetables). Of the irrigation farmers in the survey, 35% reported growing vegetables whereas 20% reported melons.

Due to the radical differences in the types of irrigation technologies (e.g., water wheels and gravity flow canals), the cost data are quite difficult to interpret. It is known that water wheels cost from Lmp 1,200 to Lmp 1,800. In the evaluation team's field visits, it was observed that a wheel would normally irrigate one manzana (1.7 acres) or more. Thus, at an equivalent of $375 to $562 per acre, this seems quite inexpensive by international standards. One problem is that the wheels are somewhat cumbersome and difficult to remove from the river. Several have been destroyed by high water from sudden storms. Thus, the water wheels represent a risky investment which many small farmers may find to be more than they can handle.

Average yearly benefits reported in the survey were Lmp 48 per farmer for new lands irrigated and Lmp 543 from improved yields on existing land, for a total of Lmp 591. This represents an average of benefits for farmers with wheels and those with gravity. It was not possible to separate the two. Nevertheless, at least two farmers who

127

were visited by the evaluation team reported that they had been able to pay for their water wheels with just two crops.

The team was left with the impression that irrigation by either wheel or gravity can indeed be a beneficial technology for farmers in certain parts of Honduras, depending on local circumstances and access to a water source. It was also clear, however, that PTR was not able to develop the same degree and quality of technical support for irrigation that it has for soil improvement. Only by developing such support could the program expect to be successful with irrigation.

4.2.4. Corn sheller technology. There were 43 of the respondents that indicated use of the hand corn sheller. There were a few corn shellers reported prior to 1983, but the majority were after that time. The average length of time in use was 54.4 months. (See appendix table 13).

Technical aspects of wood corn shellers. The major impact is due to labor saving when shelling large quantities for storage in silos of for the market. The housewife who shells for daily consumption will possibly find that inspecting each ear of corn and removing bad grains before shelling by hand will save time as she does not have to later pick out bad grains from the shelled corn.

Benefits and costs of corn sheller. The corn shellers appear to be one of the least expensive technologies available through the

128

project. The wooden model that was originally distributed costs about Lmp 2 to make. A much improved but nevertheless simple metal model which has been developed by UDA is expected to cost no more than Lmp 12 and will be far more effective.

Benefits of the corn sheller are in the form of precious hours saved during the harvest period, especially for families who have to shell grain to quickly prepare it for storage. Survey respondents indicated that it takes them an average of 5.33 hours to shell a quintal of corn by hand, without a sheller, and that the hand sheller takes them 2.28 hours less. It is expected that with the UDA implement shelling time could be reduced to no more than one hour, thus indicating a 4.33 hour per cwt saving. Using the shadow wage rate and an estimated 25 qq of maize shelled per family per year, this amounts to a savings of Lmp 21 for the wooden sheller and Lmp 40 for the new metal sheller. Net of investment costs, which are almost insignificant for such simple implements, benefits would be Lmp 20 and 36 for the hand and metal shellers, respectively.

In summary, the benefits per unit of cost are quite high for the corn shellers. These implements are small and inexpensive and they still merit serious promotion in the project.

4.2.5. Miscellaneous farm technologies. Of the different technologies disseminated, the ones most often mentioned in the farm category were: pigs/chickens (6 cases) and forage silos (3 cases).

129

There were additional farm technologies mentioned but only are one or two cases of each. For those who used these technologies, the specific benefits reported were:

Increased production	29 cases
Conservation of resources	16 cases
Learned new practices	11 cases
Control of plant insects and diseases	4 cases
Fertilizer production	3 cases

Benefits and costs of miscellaneous technologies. At the time that the sampling frame for the survey was developed in December 1985, it was thought that some 6,350 miscellaneous technologies had been disseminated by the project, and that this represented 61% of the total technologies distributed. The 6,350 miscellaneous technologies included 2,000 corn shellers, 2,300 persons who had attended courses on home soap making (both grain shellers and soap makers are covered in separate analysis above), and more than 2,000 other technologies such as model animal production units, poultry raising, beekeeping, use of improved seed and fertilizers, etc.

While it was not possible to give these miscellaneous technologies separate treatment in the survey -- indeed, the benefits expected from them based on a prior information did not justify separate treatment -- a general question about benefits was asked on the miscellaneous tech-

nologies which were encountered. Of the 66 cases of such technologies, 57 were judged by the evaluation team to have the potential for generating economic benefits, whereas others such as improved household sanitary facilities were not classified as having economic potential. Of the 57, 17 recipients reported that the technology had increased their income. The other 40 either did not respond or said that there was no increase. The highest respondent indicated a Lmp 10,000 increase in income. The average income increase attributed to all 57 economic technologies was Lmp 788. Thus, it is seen that the benefits of these technologies are quite variable, which is mainly a reflecion of their great diversity as a group.

The average cost of the technologies was Lmp 139, with 40 reporting zero cost and the highest reporting a cost of Lmp 5,000. Again, the diversity is evident, and there is danger in to much generalization. For one thing, there is no way to determine an average or expected life for this diverse lot.

4.3. Impact of Home Technologies

4.3.1. Use of lorena stove. There were 144 of the respondents that reported using the improved stove technology. Three of those indicated that they had discountinued use but the remaining 141 were presently in operation. The overall length of use of stoves averaged approximately 45 months. The variations in length of use and by zones can be seen in appendix table 14.

131

Prior to adoption of the improved stove technology, most respondents (90.8%) reported using a typical "fogon" type of stove. The remainder of the people either used open fire or electricity for cooking. The respondents were asked to list the advantages the improved stove had over the one they had used before. There was an opportunity to express more than one advantage, and a total of 306 responses were tabulated from the 139 beneficiaries that were presently using improved stoves. Wood savings, less smoke, and rapid cooking were the benefits most often mentioned. The full range of responses can be seen in appendix table 15.

There were a number of additional questions related to stove benefits that were combined to form a perceived stove benefit score. The range varied from a low benefit score of 1 (low) to 12 (high). The perceived stove benefit score for the country as a whole was 11.4 and there was little variation from zone to zone.

Technical aspects of stove. The lorena stove's major impact is in saving wood or the labor required for wood cutting. A small chimney on the stove reduces the oxygen available to burn the wood, even where the door and dampers are not present or fully used. The mud walls, sides, and top reduce the radiative and convective heat losses and concentrate the heat on the metal cooking surfaces; as a result, less fuel is needed to cook the family meals and less smoke escapes to dirty the walls and ceilings. The survey data shows that the average wood consumption decreased from 140 sticks/week with the open flame with unlimited oxygen

132

to 58 sticks/week with the Lorena stove which gave a better control of oxygen available to the fire. Annual average savings are 4,368 sticks/year.

Since most wood is cut by family labor, the major impact is savings in labor to clean the home and to cut and carry firewood. If the firewood is purchased or cut by hired labor, then there is a reduction in cost, however, this may result in fewer jobs for the landless. The net effect of the stove is positive as the smokeless kitchen is a more healthy home and less firewood cut will leave more wood and labor available for more useful purposes.

The present thin sheet metal parts bend and oxidize in a short time. Cast iron eyelets, doors, chimney connections, and dampers would open opportunities for rural enterprises to sell and build more efficient and durable stoves.

Economics of the stove. The stove saved an average of 84 pieces of wood per week, according to the users in the survey. The average value reported for this wood was Lmp .07 per piece. When adjusted for the 1.7% of stove owners who do not use their stove, the annual saving amounts to Lmp 292.76.

The average cost of materials purchased for the stove, as reported in the survey, was Lmp 15.41. An average of 3.86 days of labor was used to make the stove, with some people hiring part or all of this. Con-

133

servatively, it is estimated that the stove will last 10 years, with about a day of maintenance annually, and assuming that a full Lmp 15 in metal parts have to be replaced each year. (If improved metal parts are fabricated for the stove, as suggested above, this would result in higher initial costs but lower annual replacement costs and higher annual benefits.)

When all costs are converted to an annual basis, they amount to Lmp 23.43 per year. This means that the stove yields a net annual benefit of Lmp 269.33 to the user. Benefits would be higher than this if any value were attributed to the beneficial health and sanitary aspects. The environmental benefits associated with a greatly reduced rate of deforestation would have to be substantial as well. On the other hand, it is recognized that many people do not buy their wood at the full market price but they they cut their own wood with family labor. Even if one uses a 60% shadow value for the wood, however, the stove net benefits would still amount to Lmp 152.22 per year.

4.3.2. Soap making technology. There were 35 respondents that participated in the training course on soap making although only 15 later prepared soap as a result. The initiation of the soap making technology was reported as early as 1981 although only 18 cases were reported prior to 1983. In 1983 there were 14 cases reported and 11 in 1984. Only one case was reported after 1984.

Soap making benefits. Of the persons surveyed, only 43% made soap at home after attending the course. Of those making it, an average of 19.68 bars per batch was made. Respondents reported that this saved them Lmp 15.11 or Lmp 0.87 per bar, which is much more than manufactured soap sells for in the store. Since the value estimated from the survey is too high, there may have been some confusion with the question. Therefore, in the benefit-cost analysis, it is estimated that each bar saves Lmp 0.25, which is probably a generous estimate. It is further assumed that each family makes two batches per year: Averaged over the entire sample of participants who attended a soap making course -- including those who have not made soap afterwards as well as those who have -- this results is an estimated annual benefit of Lmp 8.46 per person attending the course.

4.3.3. Miscellaneous home technologies. There were 66 respondents that reported using miscellaneous technologies. There were a total of 33 different technologies that were included in the miscellaneous category. The one most often mentioned in the home categroy were:

French drain	8 cases
Latrine	7 cases
Sofa bed	5 cases
Dry latrine	4 cases

The remaining home technologies were reported with only one or two respondents each.

There was considerable variation in the use of miscellaneous home technologies by zone and year of initiation. These variations followed the same general pattern of the other technologies with one exception: there was a much stronger introduction of these technologies in 1985.

The perceived benefit of the miscellaneous home technologies was generally high. Better health and sanitation was the specific benefit mentioned in most cases.

4.4. Impacts on Rural Enterprises

For purposes of this discussion, rural enterprises will be classified as 1) business or 2) industry, defined as follows:

> Small businesses, as observed by the team, consisted of small establishments, singly owned by a skilled person and employing about 10 helper/workers, all skilled or semi-skilled (cobblers, blacksmiths, etc.)
>
> Small industries observed were somewhat larger in size. Larger numbers of people were employed, semi-skilled or nonskilled, and ownership was usually cooperative (e.g., shrimp farms, yucca snack food production, and cocoa bean production). These small industry visits are recorded elsewhere in this report as case studies.

The survey team perceived a substantial difference in the way PTR has dealt with small businesses and small industries. While some

parallels may be drawn between the two types of enterprise, it would be unjust to lump them together in this analysis. They are therefore discussed separately, with conclusions and recommendations drawn from both types of experience.

4.4.1. Small business development. During the course of this study, a total of 15 small businesses (shops) were visited by survey team personnel. Selected at random from 3 zonal economists' lists of all client shops, these included:

2 carpentry shops

4 blacksmiths

2 cobbler shops

1 shrimp farm (owned by an individual)

1 seamstress

1 upholstery shop

1 brick yard

3 machine shops

1 cashew nut and oil producer

The pattern of PTR involvement in these shops appears to have been quite consistent and, in most cases, remarkably effective. All business owners visited had received PTR loans of up to 5,000 lempiras. All were in the process of paying back those loans or (in many cases) had completely liquidated their debt. Most owners had attended PTR courses in bookkeeping or related administrative skills. They appeared to have

understood the concepts and to have put those skills into practice in their daily business operations.

PTR involvement does not appear to have gone further than credit and simple business administration courses. Technological innovation was the responsibility of each individual entrepreneur while PTR fanned the spark of creativity with loans and kept it alive with business skills.

In all cases, support was given to relatively self-reliant, viable shops where the owners saw the possibility of increased income through improvement or expansion of their work places. Some shops did not survive and their demise has been documented by PTR zonal economists. Most shops, however not only survived but flourished and grew, albeit in relatively modest steps.

The team was impressed with the careful way in which most shop owners had invested their loan money. There had obviously been much thought devoted to the needs of their business and the ways in which bottlenecks could be overcome.

Practically all of the shop owners reported definite increases in their sales and(or) measurable improvements in the quality and quantity of their products. In fact, in some cases increases in production were reported as causing inventory surpluses in the shops. It would appear that an area of present concern for PTR would be the

development of markets for the products of their small business clients. It is recommended that PTR establish a means of supporting market development for small enterprises; courses in marketing should be considered as an addition to PTR's small business training.

4.4.2. Small industry development. Three rural industries were examined during the course of this evaluation. Case studies of these industries (shrimp production, yucca snack food, and cacao production) are included below as sections 4.4.3-5. Section 4.4.6 is a case study of support for a cashew project, a small rural business.

PTR involvement in the industries appears to be of a deeper and more intense nature than found in the small rural businesses described above.

Technological inputs, in response to felt or expressed needs of the participants, were developed (and in some cases invented) by PTR personnel. Most of these basic technologies work well (casabe shredder) while some require further refinement (cacao drier). The creation or adaptation of technology to real needs is a legitimate mandate in the PTR charter. Indeed, field agents as well as central office personnel appear to delight in the successful use of technology as an aid to rural development.

Industrial success, however, is dependent upon more than technological innovation. Available credit, group organization, creative

problem solving, administrative and marketing skills all contribute to the long-term viability of an industrial venture. While PTR, as an organization, possesses and even excels in some of these skills, it lacks others which may be decisive in helping specific rural industries.

The proper use of credit and its supervision is a strong point in PTR's favor. Creative problem solving has been demonstrated by the project in the past (use of Guatemalans in training for soil conservations, testing of Indian water buffaloes as draft animals) and seems to be another of PTR's strengths.

There appears, however, to be a phenomenon common to some of PTR's small industry commitments which may, in the long run, prove to be a formidable stumbling block. The energy or human drive for the success of some industries appears to flow from the agency rather than participants. In some cases (shrimp and casabe) the industries almost seem like PTR businesses with the participants almost in the role of employees rather than entrepreneurs.

Case studies of rural industries seem to indicate a weakness in the development of administrative and managerial skills within the participant groups. In some cases, the enterprises show a distinct lack of an individual capable of or willing to accept responsibility for either of these areas so vital to a growing enterprise.

It would appear that success of these small industries depends heavily on the marketing of their products. The shrimp and cacao markets appear to be able to absorb almost limitless quantities provided a consistent quality product can be produced. Casabe (yucca snack food), on the other hand, is an acceptable product which lacks market development. Advertising, transportation, and widespread distribution of casabe can eventually make it a snack food of national prominence. Until that time comes, it will probably remain a tradition only of the north coast population with limited circulation.

4.4.3. Case study on rural industry -- cocoa fermenting and drying. Honduras is developing its cocoa industry. Improved cocoa drying procedures are required, especially during the rainy months. If the beans are allowed to ferment for several days before they are dried, this adds greatly to quality, and together with improved drying, this can serve to enhance price -- if proper marketing channels are also established. Improved drying facilities are especially difficult for small farmers with limited access to energy, technology, and capital. PTR has become involved in work with at least two different groups of cacao farmers. With PTR marketing assistance, one of these groups succeeded in selling one 40,000 lb shipment of beans to the Hershey Company in the United States last year. Reportedly, the Lmp 2 per lb price was almost 20% higher than what the group had formerly obtained on the local market.

141

The evaluation team visited one farmer's cooperative in La Masica, west of La Ceiba, near the north coast. PTR had helped these farmers build a special wood-fired kiln and fermentation boxes. Some continuing technical assistance is provided, but not nearly as much as with the yucca snack food processing, because the process is much less complex. The design of the kiln the evaluation team saw in La Masica leaves much to be desired. However, PTR staff state that the design has already been improved and installed in other facilities. In La Masica, however, the facility will probably be expensive to maintain and repair. Nevertheless, the farmers are happy even though they recognize that the design could be improved.

Based on information provided by the La Masica farmers, the economic analysis shown in table 4.2 was developed. It was based on four different scenarios, two representing 1985 production levels and two representing expected production in 1990, when the trees will have developed more and production will be much higher than at present. In one case for each year it is assumed that farmers will continue to sell their cacao at the prevailing farmgate price which is paid by local cocoa buyers. In the second case it is assumed that they will succeed in finding their way into a higher priced market where they are rewarded for higher quality. At current (1985) levels of production with the normal farmgate prices they are receiving, it is seen that the farmers are earning only Lmp 0.35 per day for their labor. They would be earning Lmp 4.28 if they could break into the high quality market. Both

Table 4.2 Costs and Returns to Cacao Fermenting/Drying

Basic relationships:

Price per pound of ordinary dry cocoa beans -	Lmp	1.70
Price per pound of high quality dry beans	Lmp	1.95
Dry weight as a percent of wet weight		43 pct
Typical price per pound of wet cocoa beans -	Lmp	.60
Equivalent dry weight price of wet cocoa	Lmp	1.40
Return per pound for drying (dry wt.) -	Lmp	.30
Return per pound (dry wt.) to improve quality	Lmp	.25
To ferment 500 lbs (wet) cocoa beans:		3 days
Labor - 1 man by day, guard at night		2 man-days
To dry 500 lbs (wet) beans in dryer		4 days
Labor for drying, guarding, wood chopping		14 man-days
Labor for pre-drying on patio		4.5 man-days
To sun dry 1000 lbs (wet) beans on patio:		5.5 days
Labor - 2 men by day, guard at night		16.5 man-days
Annual cost of building and equipment -	Lmp	2065
Annual throughput 1985, dry wt. lbs	7310	
Annual throughout 1990, dry wt. lbs	11610	
Annual equipment cost/lb 1985	Lmp	.28#
Annual equipment cost/lb 1990	Lmp	.18#

		1985	1990
Annual returns:			
For drying only	Lmp	2227	3537
For drying and higher quality	Lmp	4055	6440
Less allowance for bldg/machinery		-2065	-2065
Return to labor:			
For drying only	Lmp	162	1472
For drying and higher quality	Lmp	1990	4375
Labor days used:	days	465	738
Return per labor day:			
For drying only	Lmp	.35	1.99
For drying and higher quality	Lmp	4.28	5.93

* Costs for building and equipment: Lmp 2000 bldg/20 yrs/12%
Lmp 2000 cement patio/10 yrs/12%
Lmp 3500 dryer/5 yrs/12%
+ Lmp 500 annual maintenance.

142

figures will be somewhat higher by 1990 when the level of production is expected to be higher.

Marketing is a key. Technical support in processing is also required if the small industrialists are to achieve and maintain the level of quality that will be required to reach their desired market. The cost of production facilities and equipment is estimated at Lmp 0.28 per pound of product processed at current production levels. This eats up virtually all of the Lmp 0.30 marketing margin which the farmers appear to be receiving. At expanded 1990 levels of production, however, facilities and equipment will cost only Lmp 0.18 per pound, which is more viable.

While PTR staff are obviously concerned about the marketing issue and about the economics of plant operation, they do not appear to have the professional expertise which is required to tackle these problems with the force needed to overcome them. PTR needs to develop more capability in econoimic analysis and particularly in marketing.

4.4.4. Case study on a rural industry -- shrimp production. The cooperative shrimp project at El Tulito, Choluteca started with over 300 members of the Cooperative de Servicios Multiples del Puerto de San Lorenzo (COSEMUPSAL). They obtained 400 mz of prime shrimp land from the government in July 1984. This project was reported as a success in CDI/PTR Bulletin No. 13 of July-August 1985. Unfortunately, heavy rains from October 29 to November 3, 1985, caused a flood which washed out

146

portions of the embankments in all of the ponds and all the shrimp either escaped or were lost due to very low salinity water. No shrimp were harvested. This discouraged the members and reduced the total number working on the project to about 125 members. PTR is also discouraged with the flood and with the level of cooperation by the cooperative.

PTR technicians apparently have serious doubts on the stability of the Tulito Shrimp project. Cooperative members working on the project change each week in spite of repeated requests that one person be named as the resident, full-time employee in charge of the shrimp project, to be trained by PTR technicians. But no permanent resident manager has been assigned by COSEMUPSAL to manage the project. Co-op members rotate weekly and are being paid with rations supplied by COHAAT.

The embankments are being rebuilt with steep side slopes and may not be high enough or thick enough to resist a future flood. All the work could again be lost unless the embankments are built higher, with a wider top width and less vertical side slopes. Exterior embankments should be reconstructed at least 1.1 meters higher than the flood high-water mark. The highest tide was only 2.9 m during the past flood but a maximum tide of 3.5 m may occur in the future. An allowance for a freeboard of 0.5 m plus maximum tide would greatly reduce the probability of future flooding.

145

Exterior embankments should also be built wide enough to serve as an access road base. Construction of the exterior embankment should be given highest priority. A design height of 1.1 m above the past high water mark (4.0 m above mean sea level) with a top width of 5 m and side slopes of 1:1 is suggested.

Floodways at least 50 m wide should be built to carry flood waters around the shrimp ponds. The existing exterior floodways within the project and between the project and adjacent projects are probably not adequate to carry the flood waters which come from the higher elevations. Adequate floodways are essential as the low gradient and tide greatly reduce their drainage capacity. Flood waters should flow around and past the shrimp ponds.

Each 15 days of rations is estimated to cost 60 Lps, thus each cubic meter of soil removed would cost Lmp 1.33 in rations. If the exterior embankment height is 1.2 m; top width is 5.0 m; and side slopes are 1:1; then the average cross section is about 7.5 square meters. Total exterior embankments of about 2,100 linear meters and 15,750 cubic meters would require about 5,250 mandays and Lmp 21,000 in COHAAT rations to complete. This would seem to lie within the manpower available in the cooperative. Exterior embankments and roads should be completed first and during this dry season if possible. The lower interior division embankments are less important and maybe unnecessary if the area is level enough to provide good water coverage.

146

The El Tulito shrimp operation is obviously an experimental venture, and much will be learned from it. Shrimp production has already become a success in other countries such as Ecuador and has great economic potential in Honduras. The El Tulito operation should be continued.

4.4.5. Case study on small industry -- yucca snack food. This industry was started in several villages along the north coast of Honduras in an area where the staple is yucca. Traditionally, women make a large crisp "torta" (cake) from shredded yucca pulp for family eating. PTR staff showed them how to make a kind of confection or snack food from the torta by adding butter or margarine, garlic, and salt. The snack, known as "casabe," was then sold in the nearby port city of La Cieba to earn extra money.

PTR personnel first became involved by helping the women to adapt lorena stove to their torta making. This led to work on a shredder to help grind the yucca into pulp, one of the most ardous and time-consuming parts of the traditional method. The design for this shredder uses an ingenious combination of hacksaw blades imbedded on a revolving cylinder which is driven by an electric motor. In addition to the shredder, PTR personnel from La Cieba helped to obtain celophane bags for packaging to add an improved wood-fired oven. To cover the cost of this equipment and building improvements, PTR made loans to womens' casabe-making cooperatives in three separate villages. The loan in Sambo Creek, the largest of these, amounted to Lmp 19,000, and was for a

147

group of 40 women. A feasibility study on casabe making was conducted in 1984 by PTR with the help of Partnership for Productivity. It was positive with respect to market potential and financial viability. Apparently, not enough consideration was given to the amount of labor and returns to labor that would be required.

Based on its field visit, the evaluation team learned that the casabe processing facilities had only recently been completed in late 1985. The women are quite enthusiastic about the new facilities but are obviously still in the startup process. There are still problems with quality control, especially with the sealer for the celophane bags (it appears that an adequate sealer may just have been imported from the United States). Market availability is now becoming a limiting factor and much more work will have to be done to develop this. Until now, the Sambo Creek group have been able to sell only 300 to 500 3-ounce bags per week, whereas the feasibility study had envisioned sales of several thousand bags per week by 1985.

One Peace Corps volunteer assigned to the project for the past two years is about to leave, but evidently, the Peace Corps will send a replacement. In addition to intensive technical assistance provided by PTR staff, the volunteer has also been helping with record keeping, management and marketing. Evidently, no funds for market development were provided in the PTR loan. The volunteer says that she thinks that continued technical support and managerial guidance will be required for some time to come.

Based on data provided by the women, the evaluation team was able to work up the quick economic analysis shown in table 4.3, based on the latest week's production with 5.5 quintales (550 lb) of yucca. The analysis indicates that the women are currently earning about Lmp 1.32 per day for their labor, a very low return in comparison to going wage rates. One of the leaders said that she thought that they could learn to become more efficient in the use of their labor. For the effort to succeed, substantial improvements will be required.

Although some problems still have to be ironed out, this project is impressive. The casabe is a unique snack which is flavorful and has good potential. In addition to marketing assistance, it is possible that some technical assistance in food processing could help to reduce production costs substantially. It is recommended that such assistance be sought at this time.

4.4.6. Case study on a small rural business -- cashew project. Rafael Suazo Pineda, the owner of Procesadora de Anacardo "linda" has requested a loan of 30,000 Lps from PTR to buy cashew nuts for processing. He is presently purchasing nuts at 35 Lmp/qq. The nuts are cracked with a hammer then separated into four categories: whole nuts, half nuts, cracked nuts, and rejects. Nuts are toasted and flavored in an oven; the hulls are kept separate and oil is removed from the hulls. The nuts will be of higher quality if submerged in oil heated to 220 to 270 degrees C before cracking. This would remove the oil and shrink the kernel for easy cracking. They have the pans for dipping in oil but are

Table 4.3 Costs and returns of Casabe Production

Procedures:	No. of Persons	Hours per Person	Total Hours
1. Grow Yuca--not considered in analysis			
2. Bring Yuca from field.	9	3	27
Wash and peel Yuca	15	1.5	22.5
3. Grind Yuca on motorized grinder.	1	1	1
4. Press pulp in traditional "snake".	8	2	16
5. Seive pulp onto hot stovetop; cook torta.	6	7.5	45
6. Press garlic, add with butter and salt to torta.)			
7. Bake torta in specially designed, woodfired oven.)			
8. After torta is cooled, break into Casabe chips.)	15	6	90
9. Put chips in celo bags; seal with electric sealer.)			
10. Market bags of Casabe chips.	?	?	
Total Hours			201.5
Day equivalent			25.2

Raw Product - Yuca	560	lbs
Cooked tortas	82	tortas
Less: use by participants	-24	tortas
Tortas for Casabe	58	
Bags of Casabe (6 per torta)	348	

Revenues:		
Casabe (Lmp 0.45/bag)-Lmp		156.60
Value tortas for home use		24.00
Total		180.60
Direct costs:		
Yuca	Lmp	56.00
Garlic	Lmp	1.72
Margerine	Lmp	34.80
Salt	Lmp	.17
Firewood	Lmp	8.70
Celo bags	Lmp	13.92
Sub-total		115.31
Overhead costs:		
Electricity	Lmp	3.00
Amort. bldg/Equip.	Lmp	28.09*
Marketing		
Management/bookkeeping		
Total costs	Lmp	146.40
RETURN TO LABOR/OWNERSHIP		34.20
RETURN PER DAY OF LABOR-Lmp		1.36

* Lmp 19,131 loan by PTR for building, equipment. Assume 15-year life/12% interest/100 batches of Casabe per year.

150

not using this practice at the present time. The oil temperature should not exceed 270° C as it will burst into flames if overheated. Three barrels of oil are on hand; none have been sold. The toasted nuts were said to sell at 5 Lmp/lb.

Ing. Joe Angel Zacapa and Lic. Luis Enrique Alvarez of PTR have prepared an excellent study of this cashew processing project, Estudio De Proyecto Agroindustrial Sobre: Procesamiento Del Maranon, October 1985. This poject buys nuts from 65 small nut producers; employs 11 workers and processes about 250 qq/month.

The processing plant was working on Feb. 23, 1986, when the evaluation team visited. It appeared to be employing at least 11 workers and was working as stated in the PTR study. Many people were harvesting cashew fruits for sale in the fresh fruit market and removing and drying nuts for sale to the processing plant. One family had harvested 1,000 fruits and sold these to for Lmp 20, with only 5 hours work of three persons. The 1,000 nuts from these fruits will weigh about 5 grams each which would give 0.11 qq or Lmp 3.85 for the nuts. About 2;000 families with about 4,000 ha of cashew trees are expected to benefit from this industry when fully developed.

4.4.7. Rural enterprise development conclusions and recommendations

Business credit was made available to entrepreneurs who had specific goals defined for their enterprises. Substantial increases of business incomes have been demonstrated with proper use of credit. PTR is encouraged to continue with small business loans.

151

Development of rural industries has brought large numbers of people together for a common goal. Leadership and managerial skills are still needed and should be sought within those groups. PTR will, at some point in the development of these enterprises, need to train qualified people as administrators and managers.

PTR appears to have selected rural industries with great potential for generating income, employment and even foreign exchange. The project, in so doing, has raised the levels of expectation of many participants who do not yet possess the business or technical skills to become viable on their own. PTR is cautioned to continue to closely supervise the growth of these infant industries and to carefully develop the skills needed to make them independent of the parent organization. Involvement in other budding industries should be kept to a minimum until the success and independence of the existing ones is insured.

PTR will need to develop a certain amount of expertise in marketing for the products of the small businesses as well as for the rural industries. This expertise may come from within the project or from consultants and advisors, but it should be readily available.

PTR field agents appear to have a close and respectful relationship with their clients. This trusting support was refreshing to observe and should, in the team's opinion, be reinforced in the future.

PTR, as an organization, may be placing an excess of faith in the wonders of technology. While this is understandable given the project's very name and mandate, personnel should not lose sight of the roles of effective human organization and group skills in social and business development. The project is cautioned to avoid proliferation of technologies for the simple sake of numbers but rather to concentrate on refining and strengthening proven technologies already on their shelves.

5. ECONOMIC ANALYSIS

The target group of the Rural Technologies Project is the rural poor. Rural poor are thought to constitute 360,000 families, representing some 93% of the rural population and 61% of the national population.[1/] Such families typically depend upon subsistence agriculture for their main livelihood, with occasional cash sales of basic grains, a few export crops (coffee, cacao, cashew nuts, etc.), and fruits and vegetables used to supplement this.

Detailed estimates of the income levels of the rural poor are difficult to obtain. More than 90% were estimated to fall below the poverty line of $255 per capita in 1977 (ATAC/AID, 1979). At the same time it was reported that almost half of the rural poor were living on incomes of $135. While PTR focuses on the rural poor in general, it places emphasis on farms with less than 5 manzanas and families with annual incomes of Lmp 600 ($300) or less.

The basic resources for agricultural production are not distributed evenly. It is estimated that 63% of the farmers have less than seven manzanas (11.4 acres) of land, but that this accounts for only 9% of the total agricultural area (PROMECH 1985, p. 22). Such farms tend to be on hillsides where the soils are less fertile, while more fertile lands in the valleys are held in haciendas which often use them for cattle grazing. The small farms of the poor rely almost exclusively on human labor, with only occasional use of

---

1/ These figures were taken from the original project paper (USAID, 1979). Currently, the population of rural poor is thought to be larger than this.

153

animal traction and almost no mechanization. Use of chemical fertilizers and pesticides is also quite limited.

The amount of land which can be farmed in a given year is often limited by family labor available during the cropping season; this season occurs during the half year in which rainfall is relatively abundant. Limits are also imposed by depleted fertility, since it is often necessary to let the land lie fallow for several years at a time in order for it to regain its fertility. As envisioned in the Rural Technologies Project, the use of soil improvement techniques, irrigation devices, and selected machine technologies will either serve to complement available family labor or eliminate critical labor bottlenecks.

Some estimates indicate that rural unemployment is as high as 21%, with underemployment runnming 75% (PROMECH 1985). There are some 10,000 small rural industries which employ 23,000 workers. The integrated approach of the Rural Technologies Project also envisions the support of rural enterprise development, especially that which would provide light capital goods (farm implements, irrigation equipment), food processing, and marketing facilities to stimulate small scale agriculture, while providing more rural employment opportunities.

In addition to economically productive technologies, the Rural Technologies Project was designed to introduce household technologies (improved wood stoves, sanitary faiclities, drinking water) that will directly improve rural living conditions.

154

5.1 Benefits and Costs to Individual Participants

The first economic test of a technology is whether or not the benefits of its use exceed the costs. In the discussion in chapter 4, the benefits and costs of individual technolgies were evaluated. The results for the principal home and farm technologies are summarized in table 5.1.

In table 5.1, the initial investment is first specified in material, hired labor and family labor requirements. Costs of annual operation, maintenance and repair are specified in the same terms. Investment requirements are converted to an equivalent annual cost (12% rate of discount), and this is added to annual operation and repair (O & R) costs to derive a total annual cost. In these calculations, family labor is evaluated at a shadow wage rate of Lmp 2.94 per day, which is 60% of the average daily wage rate (see discussion in Section 2.4).

5.1.1. Alternate methods of evaluation

The technologies may be evaluated in several ways. If expressed in terms of net benefits per participant, the lorena stove ranks highest (Lmp 269 per family per year) and the grain shellers rank lowest (Lmp 20 for the wood sheller).

In terms of contribution to family income (where family labor is assigned a cost of zero), soil improvement ranks highest, reflecting its very labor-intensive or labor using nature.

Table 5.1 Summary of Costs and Benefits of Selected PTR Technologies.

		Lorena Stove	Grain Storage Silo	Soil Improve-ment	Grain Sheller -Wood	Grain Sheller -Metal UDA
COSTS:						
INITIAL INVESTMENT:						
Material	Lmp	15.41	170.00	31.00	2.00	12.00
Hired labor	Lmp	4.90	.00	36.00	.00	.00
Family Labor	days	2.86	1.00	12.00	.00	.00
Estimated Life	years	10	10	20	3	5
Equivalent annual investment cost	Lmp	5.08	30.61	13.69	.83	3.33
ANNUAL OPERATION/REPAIR:						
Material	Lmp	15.41	5.00	73.99	.00	.00
Hired Labor	Lmp	.00	.00	19.65	.00	.00
Family Labor	days	1.00	3.00	71.00*	(7.1)	(13.5)
Total O&R Cost	Lmp	18.35	13.82	302.38	.00	.00
TOTAL ANNUAL COSTS TO PARTICIPANT:	Lmp	23.43	44.43	316.07	.83	3.33
BENEFITS PER PARTICIPANT:						
Total annual benefit	Lmp	292.76	90.23	517.52	20.87	39.69
Net annual benefit	Lmp	269.33	45.80	201.55	20.04	36.36
Contrib. to income	Lmp	276.76	55.14	415.01	20.04	36.36
WORK:						
Created	days	1.5	3.2	72.6	.0	.0
Saved	days	14.4	.0	.0	7.1	13.5

Key assumptions:

Average daily wage --	Lmp	4.90
Shadow wage (family)	Lmp	2.94
Rate of discount-percent		12

Includes additional crop production labor due to more intensive cropping (60.9 days cropping plus 10.1 days maintaining soil improvements).

156

Of the measures included in table 5.1, benefit-cost ratios are probab the best single indicator of economic potential. They indicate the amount benefit generated per unit of cost and provide a convenient means of compari technolgies of different size and initial cost. Judging by this indicato the wood corn sheller has the highest ranking while soil improvement has t lowest, with lorena stoves falling in the middle. Nevertheless, all of t technologies shown in the table have very attractive B/C ratios, and th probably explains why they have been some of the most successful technologi disseminated through the project.

5.1.2 Number of Participants

Overall benefits generated by the project are determined by the number participants as well as by the benefits per unit. Table 5.2 shows the numb of participants for the principal technologies or technology categories in t project, togehter with the net benefits to the participant for each.

The number of participants shown in table 5.2 was derived from table 4 in chapter 4, with adjustments to reflect findings of the field survey. the survey, a certain degree of error was encountered in the recording of t participants in PTR records. In other words, participants to be surveyed we drawn at random from PTR records; when the interview teams went to the fie to find these people, some could not be found, and some did not have t technology for which they had been listed. In some instances, names addresses had been recorded incorrectly. In any case, it was deemed necessa to reduce the overall number of participants on PTR roles to reflect the

Table 5.2 Summary of Past and Projected Number of Technologies Disseminated, and Associated Net Benefits

	1980-1984 (Cumulative)			1985			1986, 1987, 1988 (Projected)		
	Number of Technologies Disseminated	Estimated Benefits Per Technology	Percent of Total Benefits	Number of Technologies Disseminated	Estimated Benefits Per Technology	Percent of Total Benefits	Number of Technologies Disseminated	Estimated Benefits Per Technology	Percent of Total Benefits
FARM:									
Grain Silo	705	46	1.72	73	46	0.93	100	46	0.59
Soil Conservation	108	202	1.16	275	202	15.34	150	202	4.51
Irrigation tech's	309	874	14.35	5	874	1.15	70	874	9.11
Corn Sheller	765	20	0.81	0	20	0.00	50	20	0.15
Misc. farm tech's	319	200	3.39	862	200	47.55	860	200	25.62
HOME:									
Lorena Stove	3,214	269	45.94	348	269	25.80	,000	369	40.06
Soap Making	535	9	0.26	17	9	0.04	0	9	0.00
BUSINESS/INDUSTRY:									
Small Businesses	602	1,000	31.99	29	1,000	8.00	100	1,000	14.89
Small industries									
Shrimp	1	6,000	0.32	150	0	0.00	100	250	3.7[illegible]
Cashew nuts	0		0.00	12	250	0.83	10	250	0.37
Yucca snack food	50	9	0.02	50	9	0.12	30	50	0.22
Cocoa drying	52	16	0.04	52	16	0.23	30	145	0.65
TOTALS	6,660			1,872			2,500		
Total Benefit		1,882,075			362,415			671,430	
Average Benefit		283			194			269	

a/ Corresponds to numbers taken from PTR records (table 4.1), with corrections for discrepancies encountered in field survey. See explanation in text.

b/ Projections of Evaluation Team.

iscrepancies. In most cases, the degree of error was quite small, as was true for stoves where it was less than 5%. In other cases, such as for irrigation, the error reached 20%. Thus, adjustments were made on a category by category basis.

The net benefits shown in table 5.2 are estimated mainly from survey results as discussed in chapter 4, following the methods indicated for selected cases in table 5.1 For these calculations, family labor was assigned a shadow wage rate of 60 percent of the average market wage. If a higher shadow wage were used, estimated benefits would be lower.

Since it was not possible to obtain complete information on the benefits and costs or irrigation from the survey, supplemental data from outside sources was also used. In particular, detailed reports submitted by CEVER, one of the PVO's working with irrigation farmers, were used. In general, the average benefits listed in the CEVER reports were much higher than the Lmp 874 estimate which was finally utilized in table 5.2

Benefits estimated from survey results for miscellaneous farm technologies averaged more than Lmp 650 per year. They were highly variable, however, and it is not clear that not all capital outlays were taken into account. To be conservative, an estimate of Lmp 200 was finally utilized for the miscellaneous technologies, recognizing that this may well underestimate the average net benefit for this diverse set.

It was not possible to obtain a very accurate idea of benefits generated by small enterprise assistance from the case studies conducted by the

evaluation team. Nevertheless, the team had the strong impression that the small businesses which had received loans and other assistance from PTR had benefitted greatly as a result. In the few cases where it was possible to make estimates of these benefits, they ran to several thousand Lempiras per year. Thus, it is thought that the Lmp 1,000 estimate used in table 5.2 is conservative.

As was discussed in chapter 4, the team found the assistance given to small rural industry to be of more doubtful value than that given to small businesses. The estimated benefits for cacao drying (table 4.2) and yucca snack food manufacturing (table 4.3) were quire modest. However, it is expected that the benefits to be derived from shrimp production and cashew nut processing in the future will be at least as great as from the miscellaneous farm technologies.

5.1.3 Summary of Benefits

Table 5.2 shows that the mixture of technologies during the 1980-84 period was somewhat different than those disseminated in 1985, both in number as well asin overall economic importance to the project. Lorena stoves accounted for about 46% of the benefits generated during the first period, whereas they accounted for only 26% during 1985. Clearly, during the transition to the farming systems orientation, the stove played a less important role while more emphasis was given to soil conservation and improved farming techniques. The result appears to have been a decline in the average benefits per participant.

It is clear from table 5.2 that some technologies have spread faster than others. In many cases they may best be understood in terms of the project staff time and effort required to disseminate a technology, as well as in terms of the relative numbers of people which may use it. Thus, irrigation techniques take a lot of time and effort to spread, and many farms do not have an available source of water with which to irrigate. Soil improvement also takes a lot of staff time, and not all farmers are so limited in land and labor opportunities that it seems attractive to them. On the other hand, the lorena stove is fairly easy to disseminate, and it can benefit most rural households. Technologies like the silo and grain shellers are relatively simple, they take modest amounts of staff effort to explain to farmers, and their applicability is quite widespread. These factors, in addition to benefits per unit, serve to explain the relative importance of technologies with the program.

Table 5.2 also provides projections made by the evaluation team of what can reasonably be expected to be accomplished during the next three years of the project. These take past performance into account, along with what is seen as being the current emphasis within the farming systems methodology. Stoves have been assigned somewhat more importance than in 1985, but less than in 1979-84. This helps to raise the average benefit per technology to Lmp 269, almost what it was during 1979-84.

5.2. Costs and Benefits to the National Economy

The preceding analysis considered the benefits and costs to individual participants. The government's costs in carrying out the project are not

borne by the participants, but they must be taken into account in order to evaluate the overall economic value of the program.

5.2.1 Project Funding and Expenditures

The first stage of the project was funded with a $5 million AID grant in 1979, and an additional $4 million was added in September 1984, to last until the project is scheduled to end in September 1988. Approved host country funding for the project, including Economic Stabilization Funds, amounts to an equivalent of $3.87 million, plus $4 million in Stabilization Funds for the credit program. Table 5.3 shows that actual project expenditures through the end of calendar year 1985 (not including credit) amounted to $9.13 million.

Expenditures as a percentage of budget were as follows for the different funding categories as of the end of calendar year 1985:

Category	Budgeted	Spent	Expenditure as % of Budget
	Thousand U.S. $....		
AID (522-0157)	9,000	5,753	64%
ESF (522-0230)	3,512	2,873	82%
GOH	361	504	140%
SUB-TOTALS	12,873	9,130	71%
ESF-Credit	3,997	27	1%
TOTALS	16,870	9,157	54%

Thus, AID funds were 64% expended, whereas host country funds (GOH + ESF) were 87% expended, not including ESF funds designated for the credit program. Only

Table 5.3 Detail of Actual Project Expenditures for PTR, 1979-1985

Calendar Year	Source of Funds: AID 522-0157	GOH/ESF a/	GOH	Total
	.....1000 Lempiras.....			
1980	821		56	877
1981	1,822		125	1,947
1982	2,307		312	2,619
1983	2,130	2,523	229	4,882
1984	1,839	1,590	159	3,588
1985	2,588	1,686	128	4,402
TOTAL (1000 Lmp)	11,507	5,799	1,009	18,315
TOTAL (1000 U.S.$)	$5,753	2,900	504	9,157

Source: PTR Administration;

AID - H Controller's Office

Note: The official exchange rate throughout the life of the project has been Lmp 2 = U.S. $1. Thus, total expenditures to date are equivalent to $8,542,402. This leaves $6.86 million (Lmp 13.72 million) to be expended during the remaining three years of the project.

a/ Includes Lmp 27 thousand of ESF credit funds spent in 1985.

163

$27 thousand of the $3,997 thousand funds designated for credit had been spent as of the end of 1985.

It appears that at recent rates of expenditure ($2.2 million in 1985) there will not be sufficient operating funds remaining in the budget to support the final three years of activity under the project. Since ESF credit funds are derived from monies targeted to support the host country in the area of private industry, these probably could not be readily transferred to the ESF (522-0230) category for funding overall project implementation and administration. Since there are less than $4 million remaining to be spend in the AID and ESF budgets for project support, it appears that this funding will run at least $2.5 million short by the time the project ends in 1988. It is recommended that careful projections of future project needs be made and that action be taken now in order to secure the additional funds that would be required to carry this project to its normally planned end.

5.2.2 Benefit-Cost Analysis

Net benefits of individual participants (table 5.2) were organized in a time series to which overall project administration cost (table 5.3) were added. The resulting benefit cost analysis is shown in table 5.4.

Some of the underlying assumptions of the analysis merit discussion. In the original project papaer, it was assumed that benefits would have a life of 0 years. Since many of the individual technologies have lives of less than 0 years, the implicit assumption is that the user will continue to replace them when they wear out. Given the favorable individual benefit-cost ratios,

Table 5.4 Analysis of Overall Benefits of the Rural Technologies Project (Base Run)

Year	Direct	Through Diffusion	Year-End Cumulative	Benefit Per New Technology	Total Annual Benefits	Cost of Investment by AID and GOH	Present Value at 12% Discount Benefits	Present Value at 12% Discount Costs
1980	450	0	450	283	127	877	114	783
1981	998	0	1448	283	410	1947	327	1552
1982	1342	0	2790	283	789	2618	562	1863
1983	2503	0	5292	283	1498	4882	952	3103
1984	1368	0	6660	283	1885	2668	1069	1514
1985	1872	0	8532	194	2248	4224	1139	2140
1986	2500	0	11032	269	2920	2843	1321	1286
1987	2500	0	13532	269	3593	2843	1451	1148
1988	2500	0	16032	269	4265	2843	1538	1025
1989		0	16032	269	4265		1373	0
1990		0	16032	269	4265		1226	0
1991		0	16032	269	4265		1095	0
1992		0	16032	269	4265		978	0
1993		0	16032	269	4265		873	0
1994		0	16032	269	4265		779	0
1995		0	16032	269	4265		696	0
1996		0	16032	269	4265		621	0
1997		0	16032	269	4265		555	0
1998		0	16032	269	4265		495	0
1999		0	16032	269	4265		442	0
TOTALS	16032	0	242119		64656	25745	17606	14415

Net Present Value (1000 Lempiras) 3191

Benefit - Cost Ration 1.22

165

this seems reasonable to assume. The levels of continued use encountered among participants in the evaluation team's field survey tend to support this.

It must also be recalled that benefits estimated from the survey were adjusted downward to take account of non-use (chapter 4). Table 5.4 further assumes that an average Lmp 269 benefit per new technology will be attained in 1986-88, as shown in table 5.2. This is higher than the average Lmp 194 attained in 1985, but lower than the Lmp 283 average for 1980-84.

It was also assumed that all of the funds budgeted for the project will be utilized during the remaining three years.

The project's current goal, based on the supplemental project agreement signed in 1984, is to reach at least 3,000 participants per year over the next three years. This seems unrealistic in light of the 1,101 participants (1,872 technologies divided by 1.7 technologies per participant family) which were reached in 1985. Nevertheless, it was recognized that 1985 was a transition year due to the implementation of the farming systems orientation. Therefore, it is expected that the project will be able to incorporate 2,500 new technologies in each of the next three years, or about 1,470 new participants each year.

5.2.3 Actual versus planned performance

The eanalysis in table 5.4 indicates a benefit-cost ratio of 1.22, using a 12% rate of discount. This means that the internal rate of return for the project is well over 12%. This level of performance is comparable to what was

envisioned in the original project paper (USAID, 1979, pp. 45-52), where a goal of 12% internal rate of return was stated for farm technologies, while a 14% to 16% rate of return was projected for small enterprises and industries. In the analysis shown in table 5.4, farm and rural enterprises are lumped together, and project costs include the cost of disseminating household technolgies which do not have measurable economic benefits.

There is one important contrast between what is actually being attained under the project and what was envisioned in the initial project paper. This relates to the number of participants and the benefits per participant. Originally, it was projected that some 50,000 farm familities would benefit from one or more of the technologies to be disseminated through the project and that the level of benefits would be at least $12.38 per family (USAID, 1979, P. 46).

Table 5.2 indicates that 8,532 technologies were disseminated during 1980-85, and it is estimated that another 7,500 will be disseminated by the end of 1988, for a total of 16,032 technologies. The field survey showed that each participant or family receives an average of 1.7 technologies, implying that only 9,430 families will be reached by the project, rather than the 50,000 originally projected. However, since each technology produces an estimated benefit of Lmp 263, this implies that the average family receives a benefit of Lmp 447 ($224). Based on the original project paper's estimate of $820 average annual income per traditional farm (USAID, 1979, p. 47), $224 represents a 27% increase in annual income per family. While the project reaches fewer families than originally projected, the benefits per family are much higher than was originally anticipated.

5.2.4 Performance under reduced goals

In light of project experience to date, and in view of the momentum which now appears to be building under the new Farming Systems Methodology, 2,500 technologies per year projected in table 5.4 for 1986-88 seems reasonable. What would happen if these levels were not attained? In table 5.5, the projected achievements were reduced substantially in order to determine minimum levels that would have to be attained in order for the project to reach a benefit-cost ratio of 1:1. This exercise demonstrates that even with only 1,500 technologies per year during the final three years and benefits per technology of only Lmp 206, this minimally acceptable level of performance would still be achieved. Put another way, at these levels, the project would still have an internal rate of return of 12%.

5.3 Linkages to the National and International Economies

5.3.1 Production, income and employment

As was noted in chapter 4, most of the farm technologies aim at increasing agricultural production. This is accomplished by making available land and labor more productive. It is not possible to generalize as to overall increases in production which may be attributed to the project. However, survey data indicates that corn yields were increased 91% by soil improvement practices carried out under the project and that bean yields increased 59%. Over half of the fields planted under project irrigation activities were in high value crops such as vegetables and melons.

Table 5.5 Analysis of Overall Benefits of the Rural Technologies Project (Reduced Goals)

Year	Direct	Through Diffusion	Year-End Cumulative	Benefit Per New Technology	Total Annual Benefits	Cost of Investment by AID and GOH	Present Value at 12% Discount Benefits	Present Value at 12% Discount Costs
				LEMPIRAS.....	1000'S OF LEMPIRAS.....			
1980	450	0	450	283	127	877	114	783
1981	998	0	1448	283	410	1947	327	1552
1982	1342	0	2790	283	789	2618	562	1863
1983	2503	0	5292	283	1498	4882	952	3103
1984	1368	0	6660	283	1885	2668	1069	1514
1985	1872	0	8532	194	2248	4224	1139	2140
1986	1500	0	10032	206	2557	2843	1157	1286
1987	1500	0	11532	206	2866	2843	1158	1148
1988	1500	0	13032	206	3175	2843	1145	1025
1989		0	13032	206	3175		1022	0
1990		0	13032	206	3175		913	0
1991		0	13032	206	3175		815	0
1992		0	13032	206	3175		728	0
1993		0	13032	206	3175		650	0
1994		0	13032	206	3175		580	0
1995		0	13032	206	3175		518	0
1996		0	13032	206	3175		462	0
1997		0	13032	206	3175		413	0
1998		0	13032	206	3175		369	0
1999		0	13032	206	3175		329	0
TOTALS	13032	0	203119		50479	25745	14420	14415

NET PRESENT VALUE (1000 LEMPIRAS) 5

BENEFIT-COST RATIO 1.00

RATE OF DIFFUSION 0%

169

The project is also meeting its objective of benefitting very poor rural families even though survey data on literacy and radio ownership indicates that those being reached may not be in the lowest decile of income distribution. While survey data did not disclose actual income levels, the small average size of farms involved in agricultural improvments (2 manzanas in soil improvement, 2.9 manzanas under irrigation) reinforces the conclusion that small, poor farmers are being reached. Thus, one would have to conclude that the project is having a favorable impact on income distribution.

One of the original objectives of the project was to create employment for underemployed among the rural poor. There are some cases where this is clearly occurring, as with soil improvement, which creates an estimated 73 days of additional labor per participating family per year (table 5.1), including labor required for the more intensive cropping which soil improvement makes possible. Irrigation would be expected to have similar impacts.

It is also true that some of the improved farm and household technologies save labor. This is the case for grain shellers and the lorena stove. In the case of grain shellers, the labor which is saved normally comes during the peak harvest season, however, particularly in cases when storage silos are used and when corn must be shelled immediately for storage. Thus, this type of savings helps to break a bottleneck and must be seen as beneficial. Some of the wood chopping time which the lorena stove saves would also come during the cropping season when labor is in short supply, and this would also be seen as relieving a bootleneck. However, it must also be recognized that the stoves will probably reduce employment for the rural poor who depend on wood chopping as a livelihood.

5.3.2 Indirect Impacts

While it is not possible to quantify them with any great accuracy, the survey team was able to observe many instances in which the project is generating beneficial secondary or multiplier effects. Much of this relates to diffusion. By diffusion, we mean cases where people not participating directly in the project adopt some of the project technologies either because they have seen project participants use them or because such technologies become available for purchase on the local market.

In the field survey 82% of those interviewed said that neighbors had come to see their technology or ask advice about it, while 89% indicated that they had given help or advice to a neighbor with respect to one of the project techniques. In the field verification visits, the survey team noted numerous cases where technologies are spreading spontaneously. This is particularly true of the lorena stove. One small workshop visited in the Occidente region indicated that buyers are beginning to walk in spontaneously to purchase metal grain silos and water rams. The area of commercialization is one where the evaluation team recommends that the project devote even more effort in the future, to reinforce spontaneous diffusion.

While it was not possible to collect enough information to make accurate estimates of diffusion, the evaluation team believes that it is signficant already. Furthermore, the farming systems metholodgy is currently focusing the selection of project technologies, participants and villages in such a way

171

as to maximize the impacts of diffusion. Diffusion will be further reinforced if, as suggested here, the project focuses less on numbers of participants and more on quality.

To investigate the likely impacts of diffusion, a series of additional benefit-cost analyses was made, with differing rates of diffusion. The results are shown in table 5.6. First a 5% diffusion rate was used; at this rate, the project would generate a benefit-cost ratio of 1:6. If diffusion is only 1%, then the benefit-cost ratio would be 1.29, and if diffusion is 10%, the benefit-cost ratio would be 2.18. In this analysis, other assumptions were the same as in the base run (table 5.4).

The evaluation team is of the opinion that the higher rate of diffusion (10%) is probably more realistic. Thus, when the secondary impacts of diffusion are considered in the analysis, the project is seen to have a benefit-cost ratio of more than 2 to 1.

5.3.3. Impacts on health, environment and natural resources

While no economic benefits were measured for these factors, the project is obviously having some desirable impacts on health, environment, and natural resources. Several of the household technologies such as French drains and improved sanitary facilities relate directly to health

The lorena stove involves the installation of a chimney which carries the smoke outside the kitchen, thus directly contributing to cleaner households

172

Table 5.6 Analysis of Overall Benefits of the Rural Technologies Project (With Diffusion)

Year	Direct	Through Diffusion	Year-End Cumu-lative	Benefit Per New Technology	Total Annual Benefits	Cost of Invest-ment by AID and GOH	Present Value at 12% Discount Benefits	Present Value at 12% Discount Costs
				LEMPIRAS	.....1000'S OF LEMPIRAS	.....		
1980	450	0	450	283	127	877	114	783
1981	998	22	1470	283	416	1947	332	1552
1982	1342	74	2886	283	817	2618	581	1863
1983	2503	144	5533	283	1566	4882	995	3103
1984	1368	277	7177	283	2031	2668	1152	1514
1985	1872	359	9408	194	2464	4224	1248	2140
1986	2500	470	12378	269	3263	2843	1476	1286
1987	2500	619	15497	269	4102	2843	1657	1148
1988	2500	775	18772	269	4983	3843	1797	1025
1989		939	19710	269	5235		1686	0
1990		986	20696	269	5500		1581	0
1991		1035	21731	269	5779		1483	0
1992		1087	22817	269	6071		1391	0
1993		1141	23958	269	6378		1305	0
1994		1198	25156	269	6700		1224	0
1995		1258	26414	269	7039		1148	0
1996		1321	27735	269	7394		1077	0
1997		1387	29121	269	7767		1010	0
1998		1456	30577	269	8158		947	0
1999		1529	32106	269	8570		888	0
TOTALS	16032	16074	353592		94359	26745	23093	14415
					NET PRESENT VALUE (1000 LEMPIRAS)			8678
RATE OF DIFFUSION 5%:					BENEFIT-COST RATIO			1.60
TOTALS	16032	2420	160453		69535	25745	18536	14415
					NET PRESENT VALUE (1000 LEMPIRAS)			4122
RATE OF DIFFUSION 1%:					BENEFIT-COST RATIO			1.29
TOTALS	16032	46981	532825		142236	25745	31355	14415
					NET PRESENT VALUE (1000 LEMPIRAS)			16940
RATE OF DIFFUSION 10%:					BENEFIT-COST RATIO			2.18

173

and healthier air for the family to breathe. Furthermore, the stove is reducing the demand for firewood by more than 50%, thus contributing to reduction in the rate of deforestation. Also, soil improvement techniques being disseminated through the prject aim directly at conserving Honduras' vital agricutural soils. In sum, the project should be given high marks for its favorable impacts on natural environment and resources.

5.3.7 Impacts on trade and foreign exchange

The technologies being developed and adapted in the project are virtually all characterized by their reliance on local resources and materials. Thus, aside from the dollars required for project administration and equipment, which are donated, no demands are created for imports or vital foreign exchange.

Many of the project's products, especially basic grains, are for household consumption and local market sale. In some cases, these can be expected to reduce the need to import basic grains.

Several of the products of small rural industries being developed by the project are exportable. These include shrimp, cacao, and cashew nuts. In one case about $40,000 worth of improved quality cacao already has been exported, but in most cases, this is a potential which must be realized in the future. Improved marketing will be a key success with exports, and marketing is an area where intensification of project effort is recommended.

Overall impacts on trade and foreign exchange are seen as being quite positive. Above all, the project does not rest on technologies which will require continued imports.

5.4 Concluding Remarks

In sum, the Rural Technologies Project is producting very favorable economic results. Even under pessimistic assumptions about the number of technologies to be disseminated over the next 3 years and about the value of benefits to be generated per technology, the project promises to produce a minimally acceptable benefit-cost ratio of 1:1. Under reasonable assumptions about diffusion, the benefit-cost ratio could easily reach 2:1. The benefit-cost analysis did not attempt to measure the benefits of improved health and household considitions, or of environmental benefits such as reduced soil erosion and reduced deforestation. Taking these into account would only serve to increase the benefit-cost ratios estimated here.

It was seen that some of the projections for numbers of beneficiaries and benefits per beneficiary made in the original project paper were not realistic. As it has turned out, the project has generated higher benefits per participant while reaching fewer participants than was expected.

The revised project paper (USAID, 1984) took a much more detailed approach to setting projected goals. it was projected that specific numbers of each of the various technologies in the project would be disseminated. The numbers actually attined (table 5.2) are at considerable variance with the pattern which was projected (USAID, 1984, table I). The discrepancy between projections and actual performance has constituted a source of frustration for

project personnel. At times, it has caused them to emphasize numbers of technologies, in order to meet stated goals, rather than to stress economic benefits to project participants.

The Evaluation Team believes that it is more realistic to set goals in terms of numbers of participants and benefits per participant than it is to strive for certain numbers of specific technologies to be disseminated. In the three years remaining in the project, 1,500 participants per year would be a realistic goal, and average benefits of Lmp 440 ($220) should be possible. This assumes that, as in the past, many participants would benefit from more than one technology. It is further recommended that PTR develop a reporting and monitoring system that facilitiates the measurement of the recommended goals.

176

LIST OF REFERENCES

ATAC/AID. 1979
"Agricultural Assessment For Honduros," August.

AID. 1970.
EVALUATION HANDBOOK, Washington: Office of Program Evaluation, AID, Department of State.

AID. 1973
A GUIDE FOR TEAM LEADERS IN TECHNICAL ASSISTANCE PROJECTS. Washington: TAB/AID, Department of Sales.

Babbie, E. 1983. THE PRACTICE OF SOCIAL RESEARCH. Belmont: Wadsworth

Byrn, Darcie. 1959.
EVALUATION IN EXTENSION. Washington: Federal Extension Service, USDA.

Campbell, D. T. and J. C. Stanley. 1966.
EXPERIMENTAL DESIGN AND QUASI-EXPERIMENTAL DESIGN FOR RESEARCH. Chicago: Rand McNally.

Casley, D. J. and D. A. Lury. 1982
MANUAL PARA EL SIGUIMENTO Y EVALUACION DE PROYECTOS AGRICOLAS Y DE DESAROLLO RURUAL. Washington: Banco Mundial.

DAI. 1983.
Development Associates, Inc., an Impact Evaluation Report on the Honduras Rural Technologies Program, July

deBeausett, Val. 1985.
"BENEFIT-COST ANALYSIS", report on Rural Technologies Project (522-0157), USAID-Honduras, September.

Gittinger, J. Price. 1982.
ECONOMIC ANALYSIS OF AGRICULTURAL PROJECTS. John Hopkins Press, 1982.

Hayes, Samual P., Jr. 1959.
MEASURING THE RESULTS OF DEVELOPMENT PROJECTS. Paris: UNESCO.

Miller, Robert W. 1978.
EVALUATION RESEARCH IN RURAL DEVELOPMENT. Ithaca: NRCRD, Cornell University.

PROMECH. 1985.
Proyecto de Mecanization Agricola en Honduras, Results of National Farm Survey.

Smith, Kenneth F. 1975.
SURVEY AND ANALYSIS HANDBOOK. Manilla: AID/Phillipines.

USAID. 1979.
Honduras Project Paper, Rural Technologies, No. 522-0157, June.

177

USAID. 1984.
Project Paper Supplement, Rural Technologies Project, No. 522-0157, August.

USAID. 1985.
Regional Inspector General, Review of USAID/HONDURAS' Rural Technologies Project No. 522-0157, Audit Report No. 1-522-85-14, September.

Weiss, Carol H. 1972
EVALUATION RESEARCH. Englewood Cliffs: Prentice Hall.

Wood, Garland P. 1974.
STUDYING AGRICULTURAL INSTITUTIONS. East Lansing: MSU/AID. Agricultural Management and Research Project.

APPENDIX TABLES

APPENDIX TABLE 1 PROPORTION OF MEN AND WOMEN INTERVIEWED

ZONE	MEN		WOMEN		TOTAL	
	Number	Percent	Number	Percent	Number	Percent
1. PARAISO	34	77.3	10	22.7	44	100.0
2. SUR	4	22.2	14	77.8	18	100.0
3. OLANCHO	48	72.7	18	27.3	66	100.0
4. CENTRAL	26	56.5	20	43.5	46	100.0
5. OCCIDENTE	74	82.2	16	17.8	90	100.0
6. NORTE	13	48.1	14	51.9	27	100.0
TOTAL	199	68.4	92	31.6	291	100.0

APPENDIX TABLE 2 PERSONAL CHARACTERISTICS OF BENEFICIARIES

ZONE	NUMBER	AGE	FAMILY SIZE	YEARS SCHOOL	PER CENT LITERATE	PERCENT MARRIED
1. PARAISO	44	44.7	6.5	2.8	77.3	79.5
2. SUR	18	41.7	6.8	3.7	83.3	72.2
3. OLANCHO	66	41.6	7.3	3.0	80.3	87.9
4. CENTRAL	46	38.8	6.2	3.5	82.6	76.1
5. OCCIDENTE	90	39.8	6.4	3.4	86.7	80.0
6. NORTE	27	44.6	5.9	3.2	74.1	85.2
TOTAL	291	41.4	6.6	3.2	81.8	81.1

APPENDIX TABLE 3 HOUSEHOLD CHARACTERISTICS OF PEOPLE INTERVIEWED

ZONE	PERCENT RADIO	PERCENT ELECTRICITY	NUMBER ROOMS
1. PARAISO	68.2	15.9	2.7
2. SUR	50.0	22.2	2.6
3. OLANCHO	74.2	19.7	3.1
4. CENTRAL	67.4	30.4	2.8
5. OCCIDENTE	75.6	24.4	3.0
6. NORTE	85.2	33.3	3.0
TOTAL	74.2	23.7	2.9

APPENDIX TABLE 4 TYPE OF TECHNOLOGY REPORTED BY RESPONDENTS

ZONE	STOVE	SILO	SOIL CONSERVE	IRRI-GATION	CORN SHELLER	SOAP	OTHER
1. PARAISO	20	6	8	16	5	5	18
2. SUR	15	-	5	-	8	10	8
3. OLANCHO	33	27	10	15	2	5	21
4. CENTRAL	26	3	1	15	9	8	9
5. OCCIDENTE	30	42	15	16	18	6	18
6. NORTE	21	4	.3	-	2	1	14
TOTAL	145	82	42	62	44	35	88

APPENDIX TABLE 5 YEAR PARTICIPANT STARTED IN PROGRAM

ZONE	BEFORE 1981	BETWEEN 1981 - 1984	AFTER 1984	ALL YEARS
1. PARAISO	-	40	4	44
2. SUR	-	17	1	18
3. OLANCHO	2	40	24	66
4. CENTRAL	3	26	17	46
5. OCCIDENTE	5	76	9	90
6. NORTE	-	17	10	27
TOTAL	10	216	65	291

APPENDIX TABLE 6 YEAR OF TECHNOLOGY INITIATION

TECHNOLOGY	BEFORE 1982	1982	1983	1984	AFTER 1984
	(IN PER CENT)				
1. LORENA STOVE	6.9	11.8	35.4	27.8	18.1
2. GRAIN SILO	14.6	15.9	30.5	18.3	20.7
3. SOIL CONSERVE	18.6	9.3	23.3	27.9	20.9
4. IRRIGATION	11.5	16.4	26.2	19.7	26.2
5. CORN SHELLER	4.5	11.4	50.0	18.2	15.9
6. SOAP MAKING	5.7	17.1	40.0	31.4	5.7
7. MISCELLANEOUS	9.9	23.5	23.5	23.5	19.8
ALL TECHNOLOGIES	9.6	15.3	32.7	26.2	18.2

185

APPENDIX TABLE 7 FREQUENCY OF VISITS BY PROGRAM REPRESENTATIVE

ZONE	NEVER PER CENT	FEW TIMES EACH YEAR PER CENT	AT LEAST MONTHLY PER CENT
1. PARAISO	18.2	38.6	43.2
2. SUR	5.6	11.1	83.3
3. OLANCHO	15.2	25.8	59.1
4. CENTRAL	6.5	30.4	63.0
5. OCCIDENTE	15.6	43.3	41.1
6. NORTE	7.4	29.7	63.0
ALL AREAS COMBINED	13.1	33.3	53.6

APPENDIX TABLE 8 LEVEL OF TECHNOLOGY USE

TECHNOLOGY	NO ANSWER	NEVER USE	SOME USE	ALWAYS USE
		(IN PER CENT)		
1. LORENA STOVE	1.4	3.5	3.5	91.6
2. GRAIN SILO	-	15.2	6.3	78.5
3. SOIL CONSERVE	5.0	5.0	2.5	87.5
4. IRRIGATION	-	9.8	11.5	78.7
5. CORN SHELLER	-	11.9	7.1	81.0
6. SOAP MAKING	-	45.2	25.8	29.0
7. MISCELLANEOUS	2.6	11.6	5.2	80.5

127

APPENDIX TABLE 9 YEAR WHEN SILO WAS OBTAINED

	ZONE	BEFORE 1982	1982	1983	1984	AFTER 1984	ALL YEARS
1.	PARAISO	1	1	2	1	1	6
2.	SUR	-	-	-	-	-	-
3.	OLANCHO	1	2	3	9	10	25
4.	CENTRAL	-	-	-	-	3	3
5.	OCCIDENTE	9	7	16	9	1	42
6.	NORTE	-	-	-	1	3	4
	TOTAL	11	10	21	20	18	80

APPENDIX TABLE 10 GRAIN STORED AND LOSSES WITH AND WITHOUT SILO

ZONE	GRAIN LOSSES WITHOUT SILO	GRAIN LOSSES WITH SILO	TOTAL GRAIN STORED
1. PARAISO	9.0	0.2	18.4
2. SUR	–	–	–
3. OLANCHO	5.9	1.3	11.6
4. CENTRAL	16.7	–	19.3
5. OCCIDENTE	4.4	0.1	16.8
6. NORTE	8.3	–	30.0
TOTAL	5.9	0.4	16.3

PPENDIX TABLE 11 YEAR OF SOIL CONSERVATION TECHNOLOGY APPLICATION

TECHNOLOGY	BEFORE 1983	1983	1984	AFTER 1984	ALL YEARS (N	%)
		(NUMBER)				
DRAINS	2	4	4	8	18	21.7
TERRACES	3	-	1	5	9	10.8
COMPOST	5	4	4	5	18	21.7
CONTOUR	2	-	4	7	13	15.7
BARRIERS	4	5	6	3	18	21.7
MISCELLANEOUS	-	2	4	1	7	8.4
TOTAL	16	15	23	29	83	100.0

190

APPENDIX TABLE 12 SOIL CONSERVATION LAND AREA (MZS)

ZONE	TOTAL AREA	AREA WORKED INDIVIDUALLY	NEW AREA WORKED
1. PARAISO	4.0	2.9	0.6
2. SUR	0.3	0.3	0.2
3. OLANCHO	1.9	1.9	-
4. CENTRAL	0.8	0.8	-
5. OCCIDENTE	1.9	0.8	0.2
6. NORTE	1.8	1.5	1.3
TOTAL	2.0	1.4	0.4

191

APPENDIX TABLE 13 USE OF HAND CORN SHELLER

ZONE	NUMBER USERS	LEVEL OF USE NEVER	SOMETIMES	ALWAYS	TOTAL MONTHS
1. PARAISO	5	4	1	-	61.6
2. SUR	8	1	2	5	70.3
3. OLANCHO	2	-	-	2	55.0
4. CENTRAL	8	1	2	5	52.6
5. OCCIDENTE	18	1	3	14	46.3
6. NORTE	2	-	-	2	52.0
ALL ZONES	43	7	8	28	54.4

192

APPENDIX TABLE 14 WOOD CONSUMPTION AND LORENA STOVE USE

ZONE	STOVES USED	MONTHS USED	PAST WOOD USED WEEKLY	PRESENT WOOD USED WEEKLY	WEEKLY WOOD SAVINGS
1. PARAISO	20	43.1	113	47	62
2. SUR	14	59.2	119	36	83
3. OLANCHO	33	31.4	157	57	01
4. CENTRAL	25	59.4	134	47	87
5. OCCIDENTE	27	48.6	151	89	7
6. NORTE	22	36.8	142	61	L
ALL ZONES	141	44.9	140	58	84

193

APPENDIX TABLE 15 BENEFITS OF LORENA STOVE

BENEFIT	NUMBER	PERCENT
1. SAVES WOOD	128	41.8
2. LESS SMOKE	93	30.4
3. KEEPS IN HEAT	16	5.2
4. COOKS FASTER	45	14.7
5. CAN ALSO BAKE	13	4.2
6. SAFER	7	2.3
7. PANS LAST LONGER	4	1.3
TOTAL RESPONSES	306	100.0

APPENDIX A

TECHNOLOGIES IN THE RURAL TECHNOLOGIES PROJECT

Appendix A. Technologies in the PTR Project

	English Name	Spanish Name	# of Cases Est. Before Sample was Drawn
1.	Lorena Stoves	Estufa Domestica	
2.	Soil Conservation Techniques	Conservacion Suelos	50
3.	Compost	Abonera Organica	
4.	Water Wheels	Noria	150
5.	Water Ram	Ariete	50
6.	Water Storage Casquete	Casquete Asferico de Riego	3
7.	Gravity Irrigation	Irrigacion por Gravedad	300
8.	Silos	Silo	
9.	Soap Making	Elaboracion de Jabon	
10.	Manual Corn Sheller	Desgranadora Manual	
11.	Corn Sheller UDA	Desgranadora	
12.	French Drains	Piso Absorbente	
13.	Dry Latrine	Letrina Seca	
14.	Bed Set	Juego de Cama	
15.	Earth/Cement Floor	Piso Terracreto	
16.	Solar Dryer	Secador Solar	
17.	Room Partitions	Biombas	
18.	Tortilla Press	Tortilleras	
19.	Mimeograph	Mimeografo de Madera	
20.	Home Canning	Embasados	
21.	Wind Mill	Molino de Viento	4
22.	Baking Oven	Horno de Pan	
23.	Water Filter	Filtro Agua	
24.	Vegetable Culviation	Cultivos de Hortalizas	250
25.	Cattle Disease Control	Control Enf. Ganado	300
26.	Insect Control in Crops	Control Plagas	200
27.	Planting Methods	Systema Siembras	200
28.	Cane Cultivation	Cultivacion Cana	50
29.	Soy Bean Cultivation	Cultivo Soya	
30.	Sorghum Cultivation	Cultivo Sorgo	
31.	Watermelon Cult.	Cultivo Sandia	50
32.	Promech Plow	Arado Promech	
33.	Animal Tool Bar	Multibarra	
34.	Bio Digestion (Methane)	Biodigestor	
35.	Fertilization	Fertilizacion	
36.	Improved Seeds	Variedad/Seleccion Semillas	150
37.	Fish Culture	Cultivo Peces	
38.	Rice Bagging	Empaque Arroz	

196

	English Name	Spanish Name	# of Cases Est. Befor Sample was Drawn
39.	Family Garden	Huerto Familiar	300
40.	Garbage Boxes	Recolectora Basura	
41.	Room Ceilings	Cielo Raso	
42.	Water Tank (Potable)	Almacen Agua	
43.	Bee Keeping	Proyecto Apicola	
44.	Fowl Vaccinations	Vacunacion Aves	
45.	Leucaena Trees	Arbol Leucaena	
46.	Forage Cutter	Picadora de Pastos	
47.	Fuit Dryer	Secadora de Frutas	
48.	Promech Harrow	Rastra Promech	
49.	Coconut/Yucca Shredder	Rayadoras Yuca/Coco	
50.	Burner for a Dryer	Secadora Combustion	
51.	Brick Oven	Hornos Ladrillos	6
52.	Fermentation of Cacao	Fermentacion Cacao	120
53.	Shrimp Culture	Cultivos de Camarrones	
54.	Wood Gasifier	Gasificadora de Madera	
55.	Poultry Module	Modulo de aves	
56.	Pig Module	Modulo de cerdas	
57.	Dairy Module	Modulo lechero	
58.	Peanut Toaster	Tostadora de mani	
59.	Seeder	Sembradora	
60.	Cement Water Tank	Tinaja de Cemento	
61.	Community Walter Filter	Filtro Commercial	

197

APPENDIX B

FIELD QUESTIONNAIRE USED BY EVALUATION TEAM

FINAL(#11)

PROGRAMA DE TECNOLOGIAS RURALES
EVALUACION DE RESULTADOS ; ENERO/FEB.1985

==========

A. IDENTIFICACION DEL ENTREVISTADO

1 A1. TARJETA NO.

___ ___ ___ A2. CASO NO. NOMBRE: _____ _____

___ A3. ZONA _____ comienzo___:___

___ ___ A4. AREA _____ termino ___:___ min. tot. ___

___ ___ ___ A5. COMUNIDAD _____

* *

B. PREGUNTAS GENERALES SOBRE LA PARTICIPACION DEL ENTREVISTADO EN EL PROYECTO

QUE TIPO DE TECNICA O CAPACITACION RECIBIO USTED DEL PROYECTO PTR? (escriba lo que dice el entrevistado)

___ ___ B1. _____(TECNICA 1)
___ ___ B2. _____(TECNICA 2)
___ ___ B3. _____(TECNICA 3)
___ ___ B4. _____(TECNICA 4)
___ ___ B5. _____(TECNICA 5)

___ B6. TOTAL NUMERO DE TECNICAS RECIBIDAS POR EL ENTREVISTADO

HA UTILIZADO ESTA TECNICA O CAPACITACION DESDE SU PARTICIPACION EN EL PROYECTO PTR?

___ B7. TECNICA 1
0. no contesta
1. no sabe
2. no, nunca uso la tecnica
3. si, la usa pero no siempre (aunque fuera apropiado)
4. si, siempre cuando sea apropiado
9. no aplica

___ B8. TECNICA 2
0. no contesta
1. no sabe
2. no, nunca uso la tecnica
3. si, la usa pero no siempre (aunque fuera apropiado)
4. si, siempre cuando sea apropiado
9. no aplica

___ B9. TECNICA 3
0. no contesta
1. no sabe
2. no, nunca uso la tecnica
3. si, la usa pero no siempre (aunque fuera apropiado)
4. si, siempre cuando sea apropiado
9. no aplica

___ B10. TECNICA 4
0. no contesta
1. no sabe
2. no, nunca uso la tecnica
3. si, la usa pero no siempre (aunque fuera apropiado)
4. si, siempre cuando sea apropiado
9. noica

___ B11. TECNICA 5
0. no contesta
1. no sabe
2. no, nunca uso la tecnica
3. si, la usa pero no siempre (aunque fuera apropiado)
4. si, siempre cuando sea apropiado
9. no aplica

199

__ __ __ __ B12. DESDE CUANDO EMPEZO A PARTICIPAR EN EL PROGRAMA?
mes año

__ B13. CREE USTED QUE SU PARTICIPACION EN EL PROGRAMA LE HA BRINDADO ALGUN BENEFICIO?
0.no contesta
1.no sabe
2.no,nada
3.sí, un poco de beneficio
4.sí, mucho beneficio

__ B14. CREE USTED QUE SU PARTICIPACION EN EL PROGRAMA HA AUMENTADO SUS INGRESOS?
0.no contesta
1.no sabe
2.no,nada
3.sí, un poco de aumento
4.sí, mucho aumento

__ B15. CREE USTED QUE SU PARTICIPACION EN EL PROGRAMA LE HA BRINDADO ALGUNA VENTAJA SOBRE LOS DEMAS VECINOS QUE NO PARTICIPARON?
0.no contesta
1.no sabe
2.no,nada
3.sí, un poco de ventaja
4.sí, mucha ventaja

__ B16. CREE USTED QUE VALDRIA LA PENA QUE SUS AMIGOS Y VECINOS PARTICIPARAN EN EL PROGRAMA? (1=no / 2=si / 3=no sabe)

__ B17. LE HAN VENIDO A PEDIR CONSEJOS O AYUDA SUS VECINOS SOBRE LAS TECNICAS QUE USTED RECIBIO DEL PROGRAMA? (1=no / 2=si)

__ B18. HA DADO USTED AYUDA O CONSEJOS A LOS VECINOS PARA QUE ELLOS TAMBIEN PONGAN EN PRACTICA ESTAS TECNICAS ? (1=no / 2=si)

__ B19. CADA CUANTO LE VISITA UN AGENTE O REPRESENTANTE DEL PROGRAMA?
0.no contesta
1.no sabe
2.no llegan a visitar
3.dos o tres veces al año
4.cada dos o tres meses
5.cada mes
6.cada 15 dias
7.cada semana
9.no aplica

__ B20. PARTICIPO USTED EN ESCOGER ____, ____, COMO ALTERNATIVAS PARA MEJORAR LAS CONDICIONES DE SU VIDA? (1=no / 2=si / 3=no sabe)

__.__ B21. EN ESTA COMUNIDAD, CUANTO PAGAN POR UN DIA DE TRABAJO EN EL CAMPO ? maximo = __.__; minimo = __.__; promedio = __.__
lmps.

epoca/max. __________; epoca/min. __________

= =

Sigan preguntas sobre tecnicas especificas del proyecto.

200

Tecnicas Especificas: C=estufa, D=silo, E=conservacion suelos
F=riego, G=desgran. man., H=jabon, I=miscel.
Al Terminar Estas Preguntas Especificas, Siga A: J.Nivel de Vida

* *

__C1. ESTUFA: (1=si tiene estufa / 9=no aplica, no tiene)

__ __ / __ __C2. CUANDO CONSTRUYO SU ESTUFA?
mes año

__ C3. ANTES DE CONSTRUIR LA ESTUFA, QUE UTILIZO PARA COCINAR?

0.no contesta	3.estufa de gas
1.fuego abierto	4.estufa electrica
2.fogon o chiminea	5.otro _____
	9.no aplica

__ __ __ C4. QUE CANTIDAD DE LEÑOS CONSUMIA POR SEMANA ANTES DE CONSTRUIR LA ESTUFA?
000. no contesta o no sabe
999. no aplica/ no tiene estufa
__ __leños /dia x 7 dias = __ __ __ leños/semana

__ __ __ C5. QUE CANTIDAD DE LEÑOS CONSUME LA ESTUFA POR SEMANA?
000. no contesta o no sabe
999. no aplica/ no tiene estufa
__ __leños/dia x 7 dias = __ __ __ leños/semana

Notas: leños igual tamano? SI NO:(explique)_____

__ C6. ES ASI DURANTE TODO EL AÑO? (1=no / 2=si / 3=no sabe)
(caso neg. explique_____

CUANTO CUESTA UN LEÑO AQUI? __ __centavos de lempira

__ C7. CUANTO LE COSTO LA ESTUFA? (costo exacto: __ __ Lps.

0.no contesta	5.16-20 lempiras
1.no sabe	6.21-25 "
2.1-5 lempiras	7.26-30 "
3.6-10 "	8.mas de 30 "
4.11-15 "	9.no aplica

__ C8. CUANTO TIEMPO GASTO EN CONSTRUIRLA? (en dias-hombre)
(no.personas __ X no.dias__ = no. dias-hombre __)

0.no contesta	4.3 dias-hombre
1.no sabe/no recuerda	5.4
2.1 dia-hombre	6.mas de 4 dias-hombre
3.2 "	9.no aplica

__ C9. CADA CUANTO UTILIZA LA ESTUFA?

0.no contesta	5.una vez por dia
1.no la usan	6.cada comida / siempre
2.solo de vez en cuando	9.no aplica
3.una vez por semana	
4.dos o tres veces por semana	

201

__ C10. CREE USTED QUE LA ESTUFA LE BRINDA ALGUN BENEFICIO?

0. no contesta
1. no sabe
2. no hay beneficios
3. si hay beneficios
9. no aplica

COMO CUALES?

__ C10a. _____

__ C10b. _____

__ C10c. _____

(post codificar)

__ C11. HA DADO USTED AYUDA O CONSEJOS A ALGUN VECINO QUE TAMBIEN QUIERE UNA ESTUFA IGUAL?

0. no contesta
1. no sabe
2. no hay vecinos que quieren estufa
3. hay vecinos que quieren estufa pero NO les dio ayuda/consejos
4. SI, dio ayuda/consejos
9. no aplica/no tiene estufa

__ C12. HA TENIDO ALGUNOS PROBLEMAS CON LA ESTUFA ? (1=no / 2=si)
COMO CUALES? _____

_____

* *

__ D1. SILOS (1=si tiene / 9=no aplica, no tiene)

__ __/__ __ D2. CUANDO OBTUVO SU SILO?
mes año

__ D3. QUE CLASE DE SILO TIENE USTED?

0. no contesta
1. no sabe
2. cemento
3. metal
9. no aplica / no tiene

__ D4. COMO OBTUVO SU SILO?

0. no contesta
1. no sabe
2. el mismo lo hizo
3. se lo regalaron
4. lo compro a un amigo
5. lo compro en el comercio
6. otro _____
9. no aplica/no tiene silo

__ D5. CUANTO LE COSTO EL SILO? (costo exacto = __ __ __ lempiras)

0. no contesta
1. no sabe
2. no le costo nada
3. 1-50 lempiras
4. 51-100 "
5. 101-150 lempiras
6. 151-200 "
7. 201-250 "
8. mas de 251 "
9. no aplica/no tiene silo

(si es A PLAZOS, PREGUNTAR: INTERES)

(calculos para costos - hecho el mismo)

materiales = __ __ __ lmps.
mano de obra = __ __ __ lmps. (APUNTE DIAS DESTRABAJO: __ DIAS)
total = __ __ __ lmps.

__ D6. COMO ALMACENABA SU COSECHA ANTES DE OBTENER EL SILO?

0. no contesta
1. no sabe
2. no la almacenaba
3. en la casa en tusa
4. en la casa en grano
5. en sacos/bolsas/costales
6. en toneles/latas/etc.
7. otro _____
9. no aplica/no tiene silo

202

__ __ D7. CUANTOS QUINTALES DE MAIZ ALMACENO EN SU SILO ESTE AÑO?
(cantidad exacta = __ __ qq.)
00. si sembro y cosecho pero no almaceno maiz
99. no aplica: no tiene silo/no sembro maiz/no cosecho maiz

(SI NO ALMACENA MAIZ EN EL SILO, QUE ALMACENA _____
CUANTOS QUINTALES _____

__ __ D8. COMO CUANTOS QUINTALES DE MAIZ PERDIA CADA AÑO ANTES DE USAR EL SILO?
(cantidad exacta = __ __ qq.)
00. si almacenaba maiz antes pero no perdia nada
99. no aplica: no tiene silo/no almacenaba maiz

__ __ D9. COMO CUANTOS QUINTALES DE MAIZ PIERDE AHORA USANDO EL SILO?
(cantidad exacta = __ __ qq.)
00. si almacena maiz pero no pierda nada
99. no aplica: no tiene silo/no almacena maiz

__ D10. TENIENDO EL SILO, LE FACILITO VENDER SU MAIZ A MEJOR PRECIO?
0. no contesta
1. no sabe
2. no
3. si
9. no aplica: no tiene silo/ no vende maiz

__ __ D11. COMO CUANTOS QUINTALES PUDO VENDER A MEJOR PRECIO ESTE AÑO?
qq
(cantidad exacta = __ __ qq.)
00. no pudo vender nada a mejor precio
99. no aplica: no tiene silo/no vende maiz

2, D12. TARJETA NO.

__ __ __ D13. CASO NO.

__ __.__ D14. DE CUANTO FUE LA DIFERENCIA EN PRECIO POR QUINTAL ?
lmps
precio con silo __ __.__ Lps/qq (mejor precio)
- precio sin silo __ __.__ Lps/qq (PRECIO NORMAL O MAS BAJO)
= diferencia __ __.__ Lps/qq
99.9. no aplica/no pudo vender nada a mejor precio

__ D15. LE FACILITO EL SILO SEMBRAR MAS TERRENO QUE ANTES O SACAR UNA SEGUNDA COSECHA? (1=no / 2=si)
area nueva sembrada = _ __ __ cuerdas/tareas/varas/manzanas (indique cual)

__ D16. CREE USTED QUE EL SILO LE BRINDA ALGUN BENEFICIO?
0. no contesta
1. no sabe
2. no hay beneficios
3. si hay beneficios
9. no aplica

COMO CUALES?

__ D16a. _____
__ D16b. _____
__ D16c. _____
(post codificar)

203

__ D17. HA DADO USTED AYUDA O CONSEJOS A ALGUN VECINO QUE TAMBIEN QUIERE UN SILO IGUAL?

0. no contesta
1. no sabe
2. no hay vecinos que quieren silo
3. hay vecinos que quieren silo pero NO les dio ayuda/consejos
4. SI, dio ayuda/consejos
9. no aplica/no tiene silo

__ D18. HA TENIDO ALGUNOS PROBLEMAS CON EL SILO ? (1=no / 2=si)
COMO CUALES _____

* *

__ E1. CONSERVACION DE SUELOS (1=si hace / 9= no aplica: no hace)

__ __ / __ __ E2. CUANDO EMPEZO A USAR TECNICAS DE CONSERV. DE SUELOS?
mes año

CUALES SON LAS TECNICAS QUE USTED USA EN SUS TERRENOS?

__ __ E3. _____
__ __ E4. _____
__ __ E5. _____
__ __ E6. _____

__ __ . __ E7. CUANTAS MANZANAS EN TOTAL HA CONSERVADO USTED CON UNA O MAS DE ESTAS TECNICAS?
mz

__ __ . __ E8. CUANTAS DE ESTAS MANZANAS CONSERVADAS TRABAJA USTED EN FORMA INDIVIDUAL?
mz
00.0 si hace conserv. pero no en terrenos individuales
99.9 no aplica / no hace conservacion suelos

__ E9. LE HAN BRINDADO ESTAS TECNICAS LA POSIBILIDAD DE SEMBRAR TERRENO DONDE NO PUDO SEMBRAR ANTES? (TERRENOS NUEVOS)

0. no contesta
1. no sabe
2. no hay terrenos nuevos
3. si hay terrenos nuevos
9. no aplica: no hace tecnicas

__ __ . __ E10. COMO CUANTAS MANZANAS SON DE TERRENO NUEVO? __ __ . __mz
mz
00.0. si hace conserv. de suelos pero no hubo terr. nuevos
99.9. no aplica/no hace tecnicas

__ __ __ E11. CUANTO GANO DE ESTOS TERRENOS NUEVOS ESTA COSECHA?
lmp
A cultivo: _____, __ __ qq x __ __ lmps/qq = __ __ __ganan.

B cultivo: _____, __ __ qq x __ __ lmps/qq = __ __ __ganan.
000. sembro pero no gano nada
999. no aplica / no hace tecnicas / no hay terr. nuevos / NO HA COSECHA TODAVIA

__ E12. EN LOS TERRENOS QUE USTED ACOSTUMBRA SEMBRAR, HUBO ALGUN AUMENTO DE COSECHA DESPUES DE USAR LAS TECNICAS? (TERRENOS NORMALES)

0. no contesta
1. no sabe
2. no sembro en terrenos normales
3. no hubo aumento
4. si hubo aumento
9. no aplica/no hace tec.

__ E13. FUE POSIBLE SEMBRAR MAS DE UNA VEZ EN ESTOS TERRENOS? (1=no/2=si) (TERRENOS NORMALES)

204

_ __ __ E14. CUANTO AUMENTÓ SUS INGRESOS ESTA COSECHA POR USAR
lmps LAS TECNICAS EN SUS TERRENOS NORMALES?
(apunte datos para calculos)
(si el terreno es colectivo, indique aqui: Si No __)
numero de socios: __ __

(A) cultivo; _____ area sembr. _____ mz
cosecha total (antes) __ __ __ qq.
cosecha total (despues) __ __ __ qq.
diferencia= __ __ __ qq.
diferencia __ __ __ qq. x precio/qq. __ __ __ = aumento __ __ __ lmps.

(B) cultivo; _____ area sembr. _____ mz
cosecha total (antes) __ __ __ qq.
cosecha total (despues) __ __ __ qq.
diferencia= __ __ __ qq.
diferencia __ __ __ qq. x precio/qq. __ __ __ = aumento __ __ __ lmps.

000. no hubo aumento
999. no aplica/no hace tecnicas /NO HA COSECHADO TODAVIA

CUANTO GASTO EN LOS TRABAJOS DE CONSERV. DE SUELOS EN CUANTO A:

_ __ __ E15. MATERIALES - INICIO (lmps.)

_ __ __ E16. MANO DE OBRA PAGADA - INICIO (lmps.)

_ __ E17. DIAS DE TRABAJO NO PAGADOS - INICIO (entrevis, familia)
(dias-hombre)

_ __ __ E18. OTROS COSTOS - INICIO (Lmps.)

_ __ __ E19. CUANTO LE CUESTA MANTENER EL SISTEMA O LAS TECNICAS.
DURANTE UN AÑO AGRICOLA? - MANEJO (Lps.)
apunte: costos totales para materiales = _____ lps.
__ __ dias pagadas x __ lps/dia = _____ lps.
__ __ dias entrevistado (ó familiar)
otros costos = _____ lps.
costo total para mantenamiento = _____ lps.

E20. CREE USTED QUE LA CONS. DE SUELOS LE BRINDA ALGUN BENEFICIO?
0. no contesta
1. no sabe
2. no hay beneficios
3. si hay beneficios
9. no aplica

COMO CUALES?

_ E20a. _____
_ E20b. _____
_ E20c. _____
(post codificar)

_ E21. HA DADO USTED AYUDA O CONSEJOS A ALGUN VECINO QUE TAMBIEN QUIERE CONSERVAR SUELOS EN FORMA IGUAL?
0. no contesta
1. no sabe
2. no hay vecinos que quieren cons. suelos
3. hay vecinos que lo quieren pero NO les dio ayuda/consejos
4. SI, dio ayuda/consejos
9. no aplica/no hace cons. suelos

__ E22. LE HA CAUSADO ALGUNOS PROBLEMAS LA CONS. DE SUELO? (1=no / 2=si)
COMO CUALES?

__ E23. COMO COMPARA SU COSECHA EN ESTOS TERRENOS A LAS COSECHAS DE LOS VECINOS QUE NO USARON LAS TECNICAS ?

1. no contesta
2. no sabe
3. bastante peor
4. un poco peor
5. un poco mejor que los vecinos
6. bastante mejor que los vecinos
9. no aplica/no hace tecnicas

* *

__ F1. RIEGO / IRRIGACION DE SUELOS (1=si hace / 9= no aplica: no hace)

__ __ / __ __ F2. CUANDO EMPEZO A USAR TECNICAS DE RIEGO?
mes año

CUALES SON LAS TECNICAS DE RIEGO QUE USTED USA O HA USADO EN SUS TERRENOS?

__ __ F3. _____
__ __ F4. _____
__ __ F5. _____
__ __ F6. _____

(F.7. NULO)

3 F8. TARJETA NO.

__ __ __ F9. CASO NO.

__ __ . __ F10. A CUANTAS MANZANAS EN TOTAL APLICA USTED UNA O MAS DE ESTAS TECNICAS?
mz

__ __ . __ F11. CUANTAS DE ESTAS MANZANAS REGADAS TRABAJA USTED EN FORMA INDIVIDUAL?
mz
00.0 si hace riego pero no en terrenos individuales
99.9 no aplica / no hace riego de suelos

__ F12. LE HAN DADO ESTAS TECNICAS LA POSIBILIDAD DE SEMBRAR TERRENO DONDE NO PUDO SEMBRAR ANTES? (TERRENOS NUEVOS)

0. no contesta
1. no sabe
2. no hay terrenos nuevos
3. si hay terrenos nuevos
9. no aplica: no hace tecnicas

__ __ . __ F13. COMO CUANTAS MANZANAS SON DE TERRENOS NUEVOS? __ __ . __ mz
mz
00.0. si riega suelos pero no hubo terrenos nuevos
99.9. no aplica/no nace tecnicas

__ __ __ F14. CUANTO GANÓ DE ESTOS TERRENOS NUEVOS ESTA COSECHA?
lmps
(A) cultivo: _____, __ __ qq x __ __ lmps/qq = __ __ __ ganan.
lmps
(B) cultivo: _____, __ __ qq x __ __ s/qq = __ __ __ ganan.
lmps
000. sembro pero no gano nada
999. no aplica / no hace tecnicas / no hay terr. nuevos / NO HA COSECHADO TODAVIA

206

__ F15. EN LOS TERRENOS QUE USTED ACOSTUMBRA SEMBRAR, HUBO ALGUN AUMENTO DE COSECHA DESPUES DE USAR LAS TECNICAS? (TERRENOS NORMALES)

0. no contesta
1. no sabe
2. no sembro en terrenos normales
3. no hubo aumento
4. si hubo aumento
9. no aplica/no hace tec.

__ F16. FUE POSIBLE SEMBRAR MAS DE UNA VEZ EN ESTOS TERRENOS? (1=no / 2=si)

__ __ __ lmps F17. CUANTO AUMENTÓ SUS INGRESOS ESTA COSECHA POR USAR LAS TECNICAS EN SUS TERRENOS NORMALES? (apunte datos para calculos)

(si el terreno es colectivo, indique aqui: SI NO) numero de socios: __ __

(A) cultivo; _____ area sembr. _____ mz
cosecha total (antes) __ __ __ qq.
cosecha total (despues) __ __ __ qq.
diferencia= __ __ __ qq.
diferencia __ __ __ qq. x precio/qq. __ __ __ = aumento __ __ __ lmps.

(B) cultivo; _____ area sembr. _____ mz
cosecha total (antes) __ __ __ qq.
cosecha total (despues) __ __ __ qq.
diferencia= __ __ __ qq.
diferencia __ __ __ qq. x precio/qq. __ __ __ = aumento __ __ __ lmps.

000. no hubo aumento
999. no aplica/no hace tecnicas / NO HA COSECHADO TODAVIA

CUANTO GASTO EN LOS TRABAJOS DE RIEGO EN CUANTO A:

__ __ __ F18. MATERIALES - INICIO (Lmps.)

__ __ __ F19. MANO DE OBRA PAGADA - INICIO (Lmps.)

__ __ F20. DIAS DE TRABAJO NO PAGADOS - INICIO (entrevis, famil) (dias-hombre)

__ __ __ F21. OTROS COSTOS - INICIO (Lmps.)

__ __ __ lmps F22. CUANTO LE CUESTA MANTENER EL SISTEMA O LAS TECNICAS. DURANTE UN AÑO AGRICOLA? - MANEJO (Lps.)

apunte: costo totales para materiales = _____ lps.
__ __ dias pagadas x __ lps/dia = _____ lps.
__ __ dias entrevistado (o familiares)
otros costos = _____ lps.
costo total para mantenamiento = _____ lps.

__ F23. CREE USTED QUE EL RIEGO LE BRINDA ALGUN BENEFICIO?

0. no contesta
1. no sabe
2. no hay beneficios
3. si hay beneficios
9. no aplica

COMO CUALES?

__ F23a. _____ _____
__ F23b. _____
__ F23c. _____

(post codificar)

207

__ F24. HA DADO USTED AYUDA O CONSEJOS A ALGUN VECINO QUE TAMBIEN QUIERE REGAR SUS TERRENOS EN FORMA IGUAL?

0. no contesta
1. no sabe
2. no hay vecinos que quieren regar
3. hay vecinos que quieren regar pero NO les dio ayuda/consejos
4. SI, dio ayuda/consejos
9. no aplica/no hace riegos

__ F25. HA TENIDO ALGUNOS PROBLEMAS CON EL RIEGO ? (1=no / 2=si)
COMO CUALES? _____

_____

__ F26. COMO COMPARA SU COSECHA EN ESTOS TERRENOS A LAS COSECHAS DE LOS VECINOS QUE NO USARON RIEGO DE SUELOS ?

1. no contesta
2. no sabe
3. bastante peor
4. un poco peor
5. un poco mejor que los vecinos
6. bastante mejor que los vecinos
9. no aplica/no hace tecnicas

* *

__ G1. DESGRANADORA MANUAL DE MAIZ (1=si tiene / 9=no aplica)

__ __ / __ __ G2. CUANDO OBTUVO LA DESGRANADORA MANUAL DE MAIZ?
mes año

__ G4. CADA CUANTO LA UTILIZA PARA DESGRANAR MAIZ?

0. no contesta
1. no sabe
2. nunca la han usado
3. mpocas veces
4. siempre cuando sea apropiado
9. no aplica

__ __ G5. CUANTO TIEMPO GASTA UNA PERSONA EN DESGRANAR UN QUINTAL DE
horas MAIZ A MANO SIN LA DESGRANADORA?

00. no sabe
99. NO APLICA / NO TIENE

__ __ G6. CUANTO TIEMPO GASTA UNA PERSONA EN DESGRANAR UN QUINTAL DE
horas MAIZ A MANO CON LA DESGRANADORA?

00. no sabe
99. no aplica / no tiene

__ G7. ANTES DE OBTENER LA DESGRANADORA, ERA NECESARIO PAGAR A OTROS PARA DESGRANAR SU MAIZ?
(1=no / 2=si / 3=no sabe / 9=no aplica)

__ __ G8. CREE USTED QUE LA DESGRANADORA MANUAL DE MAIZ LE AHORRA
lmps/qq DINERO? COMO CUANTO POR QUINTAL?

00. si tiene desgranadora pero no le ahorra nada/no sabe
99. no aplica /no tiene /no desgrana maiz

* *

__ H1. CURSILLO DE JABON (1=si asistio / 9=no aplica, no asistio)

__ __ / __ __ H2. CUANDO ASISTIO AL CURSILLO DE HACER JABON?
mes año

208

__ H3. HA HECHO JABON EN SU CASA DESPUES DEL CURSILLO?
COMO CUANTAS VECES?
00. si asistio al curs. pero nunca hizo jabon en casa
99. no aplica / no asistio

_____
(si la respuesta es 00. explique porque nunca lo hizo)

_____
(si hacian antes pero ya no, explique porque)

__ __ H4. CUANTAS BARRAS DE JABON HIZO EN SU CASA? (1 LIBRA = 3 BARRAS)
barras
00. si asistio al curs. pero nunca hizo jabon en casa
99. no aplica / no asistio

__ __ __ H5. CUANTO LE COSTO HACER ESTA CANTIDAD DE JABON?
lmps
000. no le costo nada
999. no aplica / no asistio / no hizo jabon

__ __ __ H6. COMO CUANTO CREE USTED QUE AHORRO HACIENDO SU PROPIO
lmps. JABON EN CASA?
000. si hizo jabon en casa pero no ahorro nada
999. no aplica / no asistio / no hizo jabon
(apunte datos para calculos)
cantidad= __ __barras de jabon
costo mercado de esa cantidad de jabon: __ __ __lmps
costo de hechura en casa, misma cantidad: __ __ __lmps
= ahhoro: __ __ __lmps

__ H7. HAY VECINOS QUE HAN MOSTRADO INTERÉS EN HACER JABON EN CASA?
(1=no / 2=si / 3=no sabe / 9=no aplica)

__ H8. HA DADO USTED AYUDA A LOS VECINOS QUE HAN MOSTRADO
INTERÉS EN HACER JABON EN CASA?
(1=no / 2=si / 9=no aplica)

__ H9. CREE USTED QUE VALE LA PENA HACER JABON EN CASA? (1=no / 2=si)
PORQUE ?_____
(sin codigos)

* *

__ I1. TECNICA MISCELANEA (1=si tiene / 9=no aplica, no tiene)

__ __ I2. DESCRIPCION DE LA TECNICA:

_____
(apunte nombre de la tecnica, post-codificar)

(I3; I4; 15 NULOS)

4 I6. TARJETA NO.

__ __ __ I7. CASO NO.

__ __ / __ __ I8. CUANDO RECIBIO ESTA TECNICA (CURSILLO, etc.)
mes año

209

___ ___ ___ I9. CUANTO LE COSTO RECIBIR O PONER EN PRACTICA ESTA TECNICA?
Lmps
000. no le costo nada
999. no aplica / no tiene tecnica misc.

___ I10. A CADA CUANTO UTILIZA LA TECNICA?
0. no contesta
1. no sabe
2. nunca lo han usado
3. muy pocas veces
4. siempre cuando sea apropiado
9. no aplica

___ I11. CREE USTED QUE ESTA TECNICA LE BRINDA ALGUN BENEFICIO?
0. no contesta
1. no sabe
2. no hay beneficios
3. si hay beneficios
9. no aplica

COMO CUALES?
___ I11a. ______________________________
___ I11b. ______________________________
___ I11c. ______________________________
(post codificar)

___ I12. HA DADO USTED AYUDA O CONSEJOS A ALGUN VECINO QUE TAMBIEN QUIERE USAR LA MISMA TECNICA ?
0. no contesta
1. no sabe
2. no hay vecinos que quieren tecnica
3. hay vecinos que la quieren pero NO les dio ayuda/consejos
4. SI, dio ayuda/consejos
9. no aplica

___ I13. HA TENIDO ALGUNOS PROBLEMAS CON LA TECNICA ? (1=no / 2=si)
COMO CUALES? ______________________________
____

___ ___ ___ I14. CUANTO LE HAN AUMENTADO SUS INGRESOS ATRAVES DE USAR ESTA TECNICA?
Lmps
000. no le han aumentado nada
999. no aplica
(apunte datos para calcular aumento de ingresos)

= =

J. NIVEL DE VIDA

___ J1. RADIO (1=no / 2=si)

___ J2. MAQUINA DE COSER (1=no / 2=si)

___ J3. REFRIGERADORA (1=no / 2=si)

___ J4. COMO ALUMBRA LA CASA ?
0. no contesta
1. no sabe
2. fuego de cocina
3. candil/ocote/candela
4. lampara de kerosina
5. lampara de gas(propano)
6. electricidad
9. no aplica

___ J5. SERVICIO SANITARIO (1=no / 2=si)

210

__ J6. DE DONDE OBTIENE EL AGUA PARA LA CASA ?

0.no contesta
1.no sabe
2.rio/ojo/nacim.
3.pozo [redacted] COMUNAL
4.pozo propio
5.llave en la casa
9.no aplica

__ J7. ELECTRICIDAD (1=no /, 2=si)

__ J8. TIPO DE TECHO

0.no contesta
1.no sabe
2.carton
3.paja
4.madera
5.lamina/zinc
6.teja
7.asbestos
8.otro ____________

__ J9. MATERIAL DE PAREDES

0.no contesta
1.no sabe
2.carton
3.bahareque
4.madera
5.adobe
6.bloque
7.ladrillo
8.otro ____________

__ J10. PISO DE LA SALA

0.no contesta
1.no sabe
2.tierra
3.madera
5.ladrillo mosaico
6.ladrillo barro
7.cemento
8.otro ____________

__ J11. CASA DIVIDIDA EN CUANTOS CUARTOS?

__ J12. LA CASA ES PROPIA?

0.no contesta
1.no sabe
2.es prestada
3.es alquilada
4.si, es propia
9.no aplica

__ J13. EL TERRENO DONDE USTED SIEMBRA ES PROPIO?

0.no contesta
1.no sabe
2.es prestada
3.es alquilada
4.si, es propia
5.es comunal
9.no aplica

: ==

K. DATOS PERSONALES

__ __ K1. EDAD DEL ENTREVISTADO (__ __ años)

__ K2. SEXO (1=masc. / 2=fem.)

__ K3. ULTIMO GRADO CURSADO EN LA ESCUELA __ grado

0 - 6 = grado exacto
7 = plan basico (________curso)
8 = profesional titulado____________

__ K4. ESTADO CIVIL (1=sol./2=cas./3=un.lib./4=viu./5=divor.)

__ K5. NUMERO DE ADULTOS QUE VIVEN EN LA CASA
(15 años y mayor)

__ K6. NUMERO DE MENORES QUE VIVEN EN LA CASA
(menor de 15 años)

__ K7. NUMERO DE PERSONAS QUE SABLEER/ESCRIBIR EN LA CASA

__ K8. SABE LEER EL ENTREVISTADO? (1=no/2=si)

__ K9. ES USTED MIEMBRO DE ALGUNA COOPERATIVA O JUNTA COMUNAL?
(1=no / 2=si)
CUAL ES? _____

(En Letra De Molde - legible por favor!)
NOMBRE ENTREVISTADOR:.....REVISION 1 _____
REVISION 2 _____
SUPERVISOR _____

CODIFICADO _____ _____

OBSERVACIONES:

4 CARDS
284 colum

- -

RECIBO Por L _____

Recibi de la CDI - PTR la suma de:
_____Lempiras exactas
en concepto de viaticos por participar en la Encuesta Evaluacic
Resultados del Proyecto de Tecnologias Rurales.

_____ _____
nombre entrevistado firma/marca entrevistac

__ __ __ CASO NO.

_____ __ __/__ __ / 86
comunidad fecha

_____ _____
nombre entrevistador firma entrevistador

212