Advanced Engineering Associates International

Afghanistan Energy Assistance Project

AEAI Project Nº 1101

ISLAMIC REPUBLIC OF AFGHANISTAN

Ministry of Energy and Water; Ministry of Mines and Industries, Afghanistan

FEASIBILITY STUDY FOR THE DEVELOPMENT OF A GAS FIRED THERMAL POWER FACILITY IN SHEBERGHAN

Consolidated Report

June 2005

Consolidated Report

ISLAMIC REPUBLIC OF AFGHANISTAN

Ministry of Energy and Water; Ministry of Mines and Industries, Afghanistan

Afghanistan Energy Assistance Project

AEAI Project Nº 1101

FEASIBILITY STUDY FOR THE DEVELOPMENT OF A GAS FIRED THERMAL POWER FACILITY IN SHEBERGHAN

Prepared for

Advanced Engineering Associates International

Prepared by

Maunsell Ltd
47 George Street, Newmarket
PO Box 4241
Auckland
New Zealand
Tel +64 9 379 1200
Fax +64 9 379 1230
power&energy@maunsell.com

June 2005

1028 646 34U/109
© Maunsell Ltd 2005

The information contained in this document produced by Maunsell Ltd is solely for the use of the Client identified on the cover sheet for the purpose for which it has been prepared and Maunsell Ltd undertakes no duty to or accepts any responsibility to any third party who may rely upon this document.

All rights reserved. No section or element of this document may be removed from this document, reproduced, electronically stored or transmitted in any form without the written permission of Maunsell Ltd.

Quality Information

Document	Consolidated Report
Ref	102864634U/109 m:\dept_1028\102864634.af sheberghan feasibility\reports\our reports\merged reports\consolidated report input 05.06.07\final consolidated report v1 cdt edit 30062005.doc
Date	30 June 2005
Prepared by	WSC, AS, CT, DB, ESC, DA, RW,MP
Compiled by	Chris Treleaven
Reviewed by	Warwick Cutfield

Revision History

Revision	Revision Date	Details	Authorised	
			Name/Position	Signature
1	June 2005	Draft: Consolidated Report		

Table of Contents

Glossary			v
Executive Summary			i
1	Introduction		1
	1.1	Appointment	1
	1.2	Statement of Work	1
	1.3	Objectives	1
	1.4	Project Team	1
	1.5	Mobilisation	2
	1.6	Acknowledgements	3
2	Site Visits		4
	2.1	Kabul	4
	2.2	Site Activities: Mazar-e-Sharif & Sheberghan	8
	2.2.1	Northern Transmission System	8
	2.2.2	Mazar-e-Sharif Substation	8
	2.2.3	Mazar-e-Sharif Fertiliser Works	9
	2.2.4	Discussions with Sheberghan DABM	10
	2.2.5	Inspection of Hairatan Bridge	11
	2.2.6	Meeting with DOG, MMI, Mazar-e-Sharif	11
	2.2.7	Gerquduq Site Visits	12
	2.2.8	Khoja Gogerdak and Yatimtaq Site Visits	14
	2.2.9	Qarakent Site Visits	15
	2.2.10	Site Visit to Eastern Sheberghan Potential Industrial Zone	16
	2.2.11	Discussions with Afghan Gas Company and MMI	17
	2.2.12	Development of Site Selection Matrix	19
	2.3	Final Site Activities: - Kabul	20
3	Site Selection		21
	3.1	Electrical Considerations	21
	3.1.1	Background	21
	3.1.2	Northern Transmission System - UZB-MZR-PUL	22
	3.1.3	Northern Transmission System - TUK-SHB -MZR	23
	3.1.4	Connection of New Sheberghan Generation	24
	3.2	Prescreening	25
	3.2.1	Initial Assessment Criteria / Land Availability and Suitability	25
	3.2.2	Initial Selection Elements	26
	3.3	Initial Site Assessment	30
	3.3.1	Locality Description	31
	3.3.2	Refinement of Selection Elements	37
	3.4	Ranking Criteria	38
	3.4.1	Background to Site Selection Methodology	38
	3.4.2	Development of Site Ranking Scores	38
	3.4.3	Multi Criteria Analysis	39
	3.5	Weighting and Score by Site	43

	3.5.1	Selection Element Weighting	43
	3.5.2	Calculation of Site Score by Category	43
	3.5.3	Category Weighting	44
	3.6	Analysis and Discussion	45
	3.6.1	Candidate Sites	45
	3.6.2	Non-Site Specific Feasibility Issues	45
	3.6.3	Favoured Site Based on Preliminary Assessment	46
	3.6.4	Ranking Study	46
	3.7	Recommendation	49
	3.7.1	Recommended Site	49
	3.7.2	Risks	49
4	Power Plant Alternatives		50
	4.1	Background and Constraints	50
	4.1.1	Site Selection	50
	4.1.2	Fuel Supply	52
	4.1.3	Electrical Load	54
	4.1.4	Generation Unit Sizes	54
	4.1.5	Thermal Load	55
	4.1.6	Power Plant Sizing	55
	4.1.7	Environmental and Social	56
	4.1.8	Construction	57
	4.2	Power Plant Technology Selection	58
	4.2.1	Introduction	58
	4.2.2	Reciprocating Gas Engines	58
	4.2.3	Open Cycle Gas Turbine	61
	4.2.4	Combined Cycle Gas Turbine / Reciprocating Gas Engine	63
	4.2.5	Combined Heat and Power	65
	4.2.6	Emissions	66
	4.2.7	Preliminary Financial Analysis	69
	4.3	Gas Conditioning	72
	4.3.1	Introduction	72
	4.3.2	Oil and Condensate Removal	73
	4.3.3	Separation of Natural Gas Liquids	73
	4.3.4	Sulphur (H_2S) Removal	74
	4.3.5	Water (H_2O) Removal	81
	4.3.6	Pressure Adjustment	83
	4.3.7	Technology Cost Evaluation	84
	4.4	Conclusion	84
	4.4.1	Work by Others	84
	4.4.2	Power Generation	85
	4.4.3	Gas Conditioning	85
5	Power Plant Engineering		86
	5.1	Preliminary Engineering	86

	5.1.1	General	86
	5.1.2	Gas Conditioning and Supply	89
	5.1.3	Power Plant	94
	5.1.4	Electrical Interconnection	99
	5.1.5	Civil Works	100
	5.2	Operation and Maintenance	108
	5.2.1	Maintenance Philosophy	108
	5.2.2	Manning Levels	108
	5.2.3	Training Requirements & Timing	117
	5.2.4	Tools and Equipment	118
	5.3	Cost Estimates	121
	5.3.1	Gas Conditioning Plant Estimates	121
	5.3.2	Power Plant Estimates	121
	5.3.3	Electrical Interconnection	122
	5.3.4	Civil Works	122
	5.3.5	Operational Fuel Estimates	123
	5.3.6	Non-Fuel Operation & Maintenance Estimates	123
	5.3.7	Indirect Costs	124
	5.4	Battery Limits	126
	5.5	Project Development	127
	5.5.1	Action Items Before Tender Issue	127
	5.5.2	Development and Construction Schedule	128
6	Environmental and Sociological Impact Statement		129
	6.1	Introduction	129
	6.2	Policy Legal and Administrative Framework	130
	6.2.1	Environmental Legislation and Guidelines	130
	6.2.2	International Conventions and Agreements	130
	6.2.3	World Bank Environmental Guidelines	131
	6.3	Project Description	133
	6.3.1	Power Station Technology	133
	6.3.2	Gas Conditioning System	134
	6.3.3	Project Implementation Arrangements	138
	6.3.4	Construction Activities and Schedule	139
	6.4	Description of the Environment	141
	6.4.1	Introduction	141
	6.4.2	Location, Topography and Soils	141
	6.4.3	Geology and Seismicity	144
	6.4.4	Climate and Air Quality	144
	6.4.5	Water Resources	146
	6.4.6	Ecological Resources	149
	6.4.7	Economic Development	150
	6.4.8	Social and Cultural Resources	152
	6.5	Environmental Impacts	157

6.5.1 Impact Matrix 157
6.5.2 Direct Impacts 158
6.5.3 Indirect Impacts 168
6.6 Analysis of Alternatives 169
6.6.1 Project or No Project 169
6.6.2 Site and Technology Selection 169
6.7 Mitigation Plan 172
6.8 Environmental Management and Training 178
6.8.1 Institutional Responsibility and Capacity 178
6.9 Monitoring Plan 180
6.9.1 Reporting and Review 181
6.10 Environmental and Management Costs 182
6.11 Summary and Conclusions 183

APPENDICES

APPENDIX A - STATEMENT OF WORK

APPENDIX B - LIST OF KEY OFFICIALS

APPENDIX C - QUESTIONS FROM AFGHAN GAS COMPANY

APPENDIX D - SITE SELECTION MATRIX

APPENDIX E – SITE SELECTION ANALYSIS

APPENDIX F – AFGHANISTAN GAS DISTRIBUTION NETWORK

APPENDIX G – GAS COMPOSITION OF DEVELOPED GAS FIELDS

APPENDIX H –TECHNOLOGY SELECTION FINANCIAL ANALYSIS

APPENDIX I – PRELIMINARY PROCESS FLOW DIAGRAMS

APPENDIX J - LAYOUTS

APPENDIX K – PROCESS FLOW DIAGRAMS

APPENDIX L – HEAT AND MASS BALANCE

APPENDIX M – PIPING AND INSTRUMENTATION DIAGRAMS

APPENDIX N –SINGLE LINE DIAGRAMS

APPENDIX O – CONTROL SYSTEM BLOCK DIAGRAM

APPENDIX P – SINGLE LINE COORDINATE MAP OF GAS & WATER PIPELINE

APPENDIX Q – PRELIMINARY PROJECT SCHEDULE

Glossary

Abbreviations and Acronyms

AEC	Afghanistan Engineering Consultants
AEAI	Advanced Engineering Associates International, Inc
ADB	Asian Development Bank
DABM	Da Afghanistan Breshna Moassesa (Afghanistan Electricity Enterprise)
DOG	Department of Oil & Gas
GoA	Government of Afghanistan
IDOE	Independent Department of Environment
IEE	Initial Environmental Examination
KfW	Kreditanstalt fur Wiederaufban
Maunsell	Maunsell Ltd
MEW	Ministry of Energy and Water
MMI	Ministry of Mines and Industries
NGO	Non-Governmental Organisation
T&D	Transmission and Distribution
SoW	Statement of Work
UNAIMS	United Nations Afghanistan Information Management Service
UNDP	United Nations Development Programme
UNEP	United Nations Environment Programme
WB	World Bank

Electrical Terminology

V	(Volt)	-	Unit of voltage
kV	(kilovolt)	-	1,000 volts
W	(Watt)	-	Unit of active power
kW	(kilowatt)	-	1,000 watts
MW	(Megawatt)	-	1,000 kW
Wh	(watt-hour)	-	Unit of Energy
kWh	(kilowatt-hour)	-	1,000 Wh
MWh	(Megawatt-hour)	-	1,000 kWh
GWh	(Gigawatt-hour)	-	1,000 MWh
TWh	(Terawatt-hour)	-	1,000 GWh
VA	(Volt-ampere)	-	Unit of apparent power

kVA (kilovolt-ampere)	-	1,000 VA
MVA (Megavolt-ampere)	-	1,000 kVA
VAr (volt-ampere reactive)	-	Unit of reactive power
Transmission System	-	35 kV, 110 kV or 220 kV line supplying grid substations
Medium Voltage Distribution (MV)	-	3.3 kV, 6 kV, 10 kV, 15 kV or 20 kV lines supplying distribution substations
Low Voltage Distribution (LV)	-	400/230 V distribution and service lines
Load Factor	-	Ratio of average power demand to maximum power demand
Electrical Losses	-	Difference between energy delivered and energy sent out
Grid Substation	-	Substation with primary voltage of 110 kV or 220 kV
Distribution Substation	-	Substation with secondary voltage of 400/230 V

Gas System Terminology

AGC	-	Afghan Gas Corporation
Barg	-	Pressure Bar Gauge
bcm	-	Billion Cubic Metre
CI	-	Compression Ignition
CO	-	Carbon Monoxide
CO_2	-	Carbon Dioxide
deg C	-	Degrees Centigrade
GE	-	Gas Engine
GJ	-	Giga Joule
GJ/y	-	Giga Joule per year
GT	-	Gas Turbine
H_2O	-	Water
H_2S	-	Hydrogen Sulphide
IC	-	Internal Combustion
kg/s	-	kilograms per second
kJ/kg	-	Enthalpy kilojoules per kilogram
kJ/kWh	-	Kilojoules per kilowatt hour
M^3/day	-	Normal cubic metre per day
Lean Burn	-	Air to Fuel operating range fuel lean of stoichiometric (gives high levels of O_2 in exhaust)
MWt	-	Megawatt Total
NGL's	-	Natural Gas Liquids
NOx	-	Oxides of Nitrogen
NSCR	-	Non selective catalytic reduction (removes NOx,CO and HC but only on Rich Burn equipment)
PM	-	Particulate Matter
Rich Burn	-	Air to Fuel operating range fuel near stoichiometric (gives little or no excess O_2 in exhaust)
Scrubbing	-	Stripping a particular gas from a larger volume stream
SCR	-	Selective Catalytic Reduction (can be used for NOx reduction)
Sour Gas	-	Contains H_2S greater than 5.7 mg/m^3
Sweet Gas	-	Contains H_2S less than 5.7 mg/m^3
SO	-	Sulphur Oxide
SO_2	-	Sulphur Dioxide (oxidises to give SO_3)
SO_3	-	Sulphur Trioxide (reacts with H_2O to give H_2SO_4, Sulphuric acid)
TOC	-	Total Organic Compounds

Year Equivalents and Fiscal Year

21 March 2005 is the first day of Islam year 1384. In this report 1379=2000, 1384=2005, 1390=2011, etc. The fiscal year for all Government agencies is 21 March to 20 March.

Currency Equivalents

The Afghanistan currency is the Afghani (Afs). The exchange rate as of February 2005 was USD 1.00 = Afs 49. In this report, "USD" refers to US dollars.

Place Names

The English spelling of Afghanistan place names is generally in accordance with the names used by the UNAIMS. However, there are sometimes variations in translation from the Afghanistan language.

Executive Summary

Preamble

Advanced Engineering Associates International, Inc, (AEAI) have been awarded Task Order Nº 801 by USAID for the Afghanistan Energy Assistance Project. Consulting Services to assist AEAI with the **Feasibility Study for the Development of a Gas Fired Thermal Power Facility in Sheberghan** are being provided by Maunsell Limited (Maunsell Power) of New Zealand under Delivery Order Nº 801-MAU-01.

The feasibility study activities included mobilisation to Afghanistan for the purposes of data collection and interviews with stakeholders, assessment and recommendation of a preferred site for the power plant and associated gas treatment, assessment and recommendation of the preferred power plant and gas treatment technology from a range of alternatives, an assessment of power plant and gas treatment engineering requirements for the preferred site, and an environmental and sociological impact assessment.

Reports on the above mentioned activities have been submitted on a stand alone basis. This report, entitled **Feasibility Study Report,** presents the content of all previously issued deliverables in a single, consolidated document.

Section 1: Introduction

Section 1 summarises the appointment and role of Maunsell Power in the overall feasibility study team, responsible ministries of the Government of Afghanistan, statement of work, study objectives and identifies the project team key personnel from each contributing entity.

Section 2: Site Visits

The mobilisation to Afghanistan and in country activity of Maunsell Power is presented in Section 2. Advance elements of the Maunsell Power team (2 personnel) arrived in Kabul on February 20 2005, and undertook initial meetings with GoA ministry representatives and AEAI before travelling to the team's regional base in Mazar-e-Sharif to gather data for the electrical grid interconnection aspects of the study.

The balance of the Maunsell Power team (4 personnel) arrived in Kabul on 03 March 2005, travelling in pairs to Mazar-e-Sharif on 06 and 08 March respectively. Briefings were held with officials of MMI, MEW, IDOE and AEAI between 04 March to 07 March, from which a short-listing and pre-screening process for identifying potential sites based on broad selection criteria was initiated.

Visits to six potential sites in the Sheberghan and Mazar-e-Sahrif area were undertaken over the period 06 to 10 March inclusive by representatives of Maunsell Power. All travel occurred by road transport during this period which enabled an initial impression of the condition and capacity of the regional transport infrastructure to be formed. The condition of a possible

overland transportation route entering Afghanistan at the border with Uzbekistan was assessed during a frontier visit which occurred on 08 March.

Contact with regional officials of MMI and MEW, who accompanied the Maunsell Power representatives on site visits or made themselves available for technical clarifications, is documented in this section.

Maunsell Power representatives returned to Kabul on 13 March. Additional information gathering from GoA ministry officials and debrief with AEAI occurred during 13 and 14 March. Maunsell Power representatives departed Afghanistan on 15 March

Section 3: Site Selection

The site selection process including pre-screening, derivation of assessment criteria, comparative assessment of potential sites, and justification of the preferred site adjacent to the gas treatment facility and DABM substation at Gerquduq, is presented in section 3.

Section 3.1: Summarises the existing condition of Afghanistan's electricity transmission system and what impact site selection for the proposed thermal generation plant will have on planned rehabilitation of the national network. From an electrical perspective, selection of any site within the study area would not adversely impact transmission system rehabilitation.

Section 3.2:. Describes the site pre-screening process from which six potential sites were identified from assessment against land ownership, proximity to resources, land accessibility, mine clearance, security, customary land use, geographic assessment, and potential social and environmental impacts. The Maunsell Power team identified an initial list of 146 selection elements grouped into 12 assessment categories against which each site was to be judged (section 3.2.2).

Section 3.3: Describes the features of each of the six shortlisted sites that were visited by the Maunsell Power team. Review of the list of selection elements at the conclusion of the first visit to all six sites enabled non-varying or irrelevant elements to be eliminated from the list, leaving 79 selection elements which are differentiable between sites.

The process of site by site selection element ranking, selection element weighting and selection category weighting is described in section 3.4 and 3.5. A multi criteria analysis (MCA) technique was used by Maunsell Power to assess each site on the basis of the data gathered and site observations made.

The Gerquduq site emerged as the preferred site on the basis of the ranking study undertaken using an MCA technique. Analysis of this outcome, including discussion of non site specific feasibility issues, ranking study and sensitivity of the result to rankings and weightings, is presented in section 3.6.

Section 3.7: Recommends that the Gerquduq site is the most appropriate location for a gas fired generation facility of up to 100MW output.

Section 4: Power Plant Alternatives

Power plant and associated gas processing technology alternatives are evaluated in this section. The evaluation is based on the plant being located at the Gerquduq site as recommended in the site selection study.

Section 4.1: Describes the background and constraints associated with the preferred site, including the general locality and prevalent meteorological conditions. Potential technology selection constraints considered in section 4.1 include air quality, the availability and competing demands on water supply, fuel supply and characteristics, the ability of the transmission network to link demand with supply and transmission system stability as influences on optimising generating unit sizes, potential uses for waste heat, environmental and social considerations and commissioning date from placement of generating equipment orders.

Four power plant technology options are presented and compared in section 4.2. These are reciprocating gas engines, combined cycle gas engines, open cycle gas turbines and combined cycle gas turbines. Comparative analysis is based on factors such as the complexity of the technology, fuel quality requirements, sizing of generation units to match transmission system capabilities, capital and life cycle costs, efficiency and emissions.

Conditioning requirements for gas to be suitable for use as power plant fuel are described in section 4.3. The principal impurities to be removed from natural gas in the Sheberghan fields are hydrogen sulphide (H_2S) and water (H_2O). Suitable processes for removal of H_2S include amine scrubbing, incineration, sulphur recovery, re-injection, biological and iron redox. Water vapour removal by glycol dehydration, solid-dessicant dehydration or Joule-Thompson valve technology are identified as suitable processes for the Sheberghan gas supply.

The recommended power plant and gas treatment technology, as noted in section 4.4, is reciprocating gas engines with waste heat recovery for the power plant, and gas treatment consisting of H_2S removal using amine scrubbing, H_2O removal using glycol dehydration, solids filtration and pre-heating.

Section 5: Power Plant Engineering

This section outlines the engineering requirements in support of the power plant and gas treatment technologies recommended in Section 4. Section 5.1 outlines the major engineering elements, functionality and supporting infrastructure requirements for the power plant and gas treatment facility.

Plant operation and maintenance requirements are presented in section 5.2. Consideration is given to an appropriate plant maintenance philosophy, with manning levels and outline job descriptions tabulated for power plant and gas treatment facility. The section concludes with discussion on preferred staff training requirements and a schedule of tools and equipment required to run and maintain both plants.

Section 5.3: Discusses the sources of information used to determine cost estimates relevant to Afghanistan conditions. Cost estimates are provided for the power plant, gas conditioning plant and the associated civil works.

Life cycle and indirect project cost estimates are also discussed in section 5.3. Life cycle costs include fuel consumption, non-fuel operation costs, maintenance costs, workshop and tool estimates and staff training. Indirect costs include those associated with the tendering process and construction management, commissioning and start up costs, owners costs, insurance and interest. A contingency of 20% is allowed for in the overall cost estimates.

Section 5.4: Lists additional related activities that are outside the scope of this study but will require resolution before the project can be implemented. These activities are rehabilitation of the gas collection system, route survey for equipment delivery, geotechnical investigation of the site, provision of additional water supply wells at Qarakent, and the high voltage transmission interconnection.

Technical data required, preferably in advance of tendering, is discussed in section 5.5. The action items noted are analysis of the gas resource, water analysis, meteorological data specific to plant performance and infrastructure design, preliminary geotechnical assessment, derivation of a site specific seismic response spectrum, and assessment of the electrical load figures for the Sheberghan and Mazar-e-Sharif sections of the northern transmission line.

The construction programme and phased implementation of the power plant to match new generation against external constraints is discussed in section 5.5.2. The external constraints to supplying power from the plant are development and rehabilitation of the existing gas reserves, refurbishment of transmission lines between Sheberghan and Mazar-e-Sharif, and completion of the planned transmission line from Mazar-e-Sharif to Kabul.

Section 6: Environmental and Sociological Impact Statement

The anticipated environmental and sociological impacts of the project are discussed in section 6, prepared in accordance with World Bank Environmental Assessment Guidelines.

Section 6.2: Begins by outlining the legal and administrative framework for environmental policy currently in existence in Afghanistan. With the environmental legal system being at an early stage of development, there is no legal planning process for the development and operation

of thermal power plants, and no means to enforce environmental compliance guidelines. A Draft Environmental Protection Act is currently being rolled out to various government agencies. The environmental impact assessment guidelines of international funding agencies, and in particular the World Bank, have been applied in the absence of country specific guidelines.

Section 6.3: Provides a description of the project elements associated with the power plant and gas treatment plant, replicating the technology description provided in section 4, for the preferred technology options, and engineering aspects covered in section 5.

Section 6.4: Describes the existing environmental resources of the area affected by the project. These include physical, ecological, economic, social and cultural resources. The preferred site is located on the edge of a desert area with minimal observed utilisation. Water is considered as Afghanistan's most precious resource and integrated management to balance competing demands is seen as a key priority. The influence of this factor on plant technology selection has been highlighted in section 4. Economic resources, including infrastructure and development, have suffered major setbacks due to the recent history of the country. The socio-economic dynamics of the Sheberghan region have been assessed on the basis of a household survey that was undertaken as part of this study. The survey findings are provided in section 6.4.8.

Section 6.5: Discusses the environmental impacts of the proposed project on the local environment. Table 6.5 in section 6.5.1 presents an impact matrix which shows the significance, duration and mitigation measures for a range of direct and indirect impacts. The list of potential impacts corresponds to items associated with thermoelectric projects and petroleum refining identified in the World Bank Source Book: Volume III Guidelines for Environmental Assessment of Energy and Industry Projects.

Impacts are individually addressed in the remainder of section 6.5. Pollutant emission levels for the selected plant are within World Bank requirements except Nitrogen oxides for which the daily emissions at peak output are marginally above the guideline value. Detailed discussion of this pollutant and mitigation measures is presented in section 6.5.2.1.3. All potential adverse impacts were deemed to be minor, insignificant or non-existent. Significant potential benefits in terms of improved opportunities for economic development and poverty reduction were assessed as outweighing the total potential negative effects.

Section 6.6: Contains an analysis of alternative project variables with respect to recommendations made in Sections 3, 4 and 5 from an environmental and sociological perspective.

Section 6.7: Presents an environmental management plan in matrix format which summarises specific mitigation strategies and activities recommended in the environmental impact assessment including associated effectiveness indicators, means of verification, responsibilities and time scale for implantation.

Roles and responsibilities with respect to environmental management to be implemented during and after the construction of the project are summarised in section 6.8. Section 6.9 presents an environmental monitoring plan in matrix format, covering pre-construction, construction, operation and maintenance phases. Budget responsibilities for environmental mitigation, management and monitoring measures are presented in section 6.10.

The conclusions drawn in section 6.11 indicate that the project will generate only minor and acceptable environmental impacts. Project planning incorporates mitigation measures based on international best practice in the design, construction and operation of thermal power generation facilities.

1 Introduction

1.1 Appointment

Advanced Engineering Associates International, Inc, (AEAI) have been awarded Task Order Nº 801 by USAID for the Afghanistan Energy Assistance Project. Consulting Services to assist AEAI with the **Feasibility Study for the Development of a Gas Fired Thermal Power Facility in Sheberghan** are being provided by Maunsell Limited (Maunsell Power) of New Zealand under Delivery Order Nº 801-MAU-01.

The responsible Ministries are the Ministry of Mines & Industries (MMI) and the Ministry of Energy and Water (MEW - until recently known as the Ministry of Water and Power).

Services by Maunsell Power commenced in Afghanistan on 20 February 2005 with arrival in Kabul of the Project Director and Social Specialist. The remainder of the Maunsell Power field team arrived on 3 March and were in Afghanistan until 15 March 2005.

1.2 Statement of Work

The Statement of Work for the project is reproduced in Appendix A.

This **report is the** Final **Feasibility Study Report** containing all elements of the study.

1.3 Objectives

The purpose of the project is to prepare a feasibility study of the development, construction, acceptance and operation and maintenance of a gas fired thermal power generation facility inclusive of ancillary requirements at Sheberghan. This supports the Government of Afghanistan's (GoA) aim to provide clarity concerning domestic energy resource options, to improve Afghanistan's basis for negotiating future energy import contracts, and to improve import strategies.

1.4 Project Team

The following key personnel and project team were involved during this initial stage of the assignment:

MMI

Minister of Mines and Industries	H.E. Dip, Eng, Mohammad Mir Sediq
President of Oil & Gas	Dep. Eng. M. Akram Ghiaci
Minister Adviser for Mines and Energy	Prof. Dr. Dipl. Geol, A. Rahman Ashraf
Kabul Polytechnical	Dr Eng Abdul Rahman Mangal

MMI Expert	Eng Ahmadi
Afghan Gas Company	Eng Habibullah

MEW

Minister of Energy and Water	H.E. Ishmayel Khan
General Director Planning	Eng Ghulam Rabbani

IDOE

Deputy Minister for the Environment	Dost Mohammad Amin

AEAI/USAID:

Deputy Director Office of Infrastructure, Engineering & Energy USAID	Dr. Peter A. Jezek
Deputy Manager - Power Infrastructure, Engineering & Energy USAID	Mr Tom Hayes
Deputy Chief of Party Afghanistan Energy Assistance Program AEAI	Dr Jack Whippen
MMI Adviser AEAI	Ms Mary Louise Vitelli
Vice President Chief of Party AEAI	Mr Carl Duisberg
Security and Logistics Manager AEAI	Mr Dejan Bosnjak

Maunsell Power:

Team Leader/Power Plant Specialist	Mr W Cutfield
Project Director/Power Engineer	Mr M Breckon
Civil/Structural Engineer	Mr C Treleaven
Geotechnical Engineer	Mr D Burns
Social Safeguards Specialist	Mrs S Campbell
Environmental Specialist	Mr A Sewell.

Support staff from Maunsell Power's head office in Auckland assisted with designated tasks in accordance with the Contract. A complete list of key officials who were met or contributed during the project is given in Appendix B.

1.5 Mobilisation

Services on site commenced on 20 February 2005 following the signing of the contract between AEAI and Maunsell Power. During this stage, the Maunsell Power team were on site for the following dates:

Position	Name	Date of Arrival	Date of Departure
Project Director and Power Engineer	Michael Breckon	20 Feb 2005	12 Mar 2005
Social Safeguards Specialist	Shanny Campbell	20 Feb 2005	12 Mar 2005
Team Leader/Power Plant Specialist	Warwick Cutfield	03 Mar 2005	15 Mar 2005

Geotechnical Engineer	David Burns	03 Mar 2005	15 Mar 2005
Environmental Specialist	Alan Sewell	03 Mar 2005	15 Mar 2005
Civil/Structural Engineer	Chris Treleaven	03 Mar 2005	15 Mar 2005

1.6 Acknowledgements

The Maunsell Power team gratefully acknowledge the co-operation and assistance of the MMI, MEW and AEAI management and officers in providing all necessary information and support resources and facilitating visits to the project areas and other GoA facilities.

2 Site Visits

2.1 Kabul

The Maunsell Power team mobilised to Afghanistan in two contingents. Breckon and Campbell arrived in Kabul on 20 February 2005. Their initial tasks involved site visit planning for the team including organisation of logistics, initial discussions with AEAI, MMI and MEW; as well as data gathering in respect of the electrical considerations for the proposed power plant. On 3 March Breckon and Campbell flew from Kabul to Mazar-e-Sharif.

The remainder of the Maunsell Power team (Cutfield, Treleaven, Burns, Sewell) arrived in Kabul on 3 March 2005.

Discussions with Jack Whippen (AEAI) on 4 March focused on clarification of the scope of the study, mainly in respect of the gas processing equipment and associated issues to be covered by the Maunsell Power team. Whippen advised that he thought it was feasible to operate Sheberghan power station without gas sweetening although accepted that maintenance costs would be much higher. Whippen also advised that AEAI had received proposals from Wartsila and Siemens for Sheberghan power station and that these would be forwarded to the team. Wartsila and Siemens' proposals have been received and reviewed by the team.

On 5 March an introductory meeting was held at the Ministry of Mines and Industry (MMI) with the two experts (Engineer Ahmadi and Dr Mangal) who would accompany the team on the field survey to the Sheberghan area. In addition to confirming travel details for the survey team, a general discussion was held on existing and potential gas resources, existing well field infrastructure and transport infrastructure in and around Sheberghan. The experts suggested that it is better to rehabilitate existing gas wells for the supply of gas to the power station than to rely on unproven wells. From the discussions it became apparent to the team that future gas extracted from the existing fields will require sweetening. It was also advised that a railway bridge across the Amudarya River (border with Uzbekistan) would be capable of carrying heavy plant equipment.

A meeting with Engineer Rabbani (General Director Planning) of the Ministry of Energy and Water (MEW) was held to introduce the team and obtain the MEW's views on the various technology options for the proposed power plant. MEW expected no major problems associated with the various technology options in terms of in-country capacity to eventually maintain and operate the facility. However, MEWs expectation was for a large open or combined cycle gas turbine.

A shortlist of potential sites for the gas-fired power plant was prepared by the Maunsell team in Kabul. Given the over-riding objective of establishing the plant in the Sheberghan area (and not elsewhere in the country such as Kabul), sites were sought that satisfied the following broad selection criteria:

- Land freely available and with clear ownership
- Proximity to gas fields and electricity transmission system
- Availability of construction (and O&M) workforce
- Proximity to water supply
- Potential for integrating with existing industries/institutions and/or developing related industries.

A description of the pre-screening process to select a shortlist of potential sites is included in Appendix D. Six sites, including four sites around Sheberghan and two near Mazar-e-Sharif, were selected.

- Site 1, at Gerquduq in the vicinity of the existing DABM substation and the Afghan Gas Company well field and processing facility
- Site 2, at Khoja Gogerdak adjacent to the Afghan Gas Company well field and processing facility
- Site 3, at Qarakent, in the vicinity of the existing water pumping station, which supplies potable water to Sheberghan City and the Afghan Gas Company assets at Gerquduq and Khoja Gogerdak
- Site 4, on the Eastern outskirts of Sheberghan City, on land identified as a potential industrial zone
- Site 5, adjacent to the Ministry of Mines and Industry fertiliser plant near the township of Dihdadi, near Mazar-e-Sharif
- Site 6, adjacent to the existing DABM substation at Mazar-e-Sharif.

The relative location of each site and surrounding landmarks is shown in Figure 2.1 below.

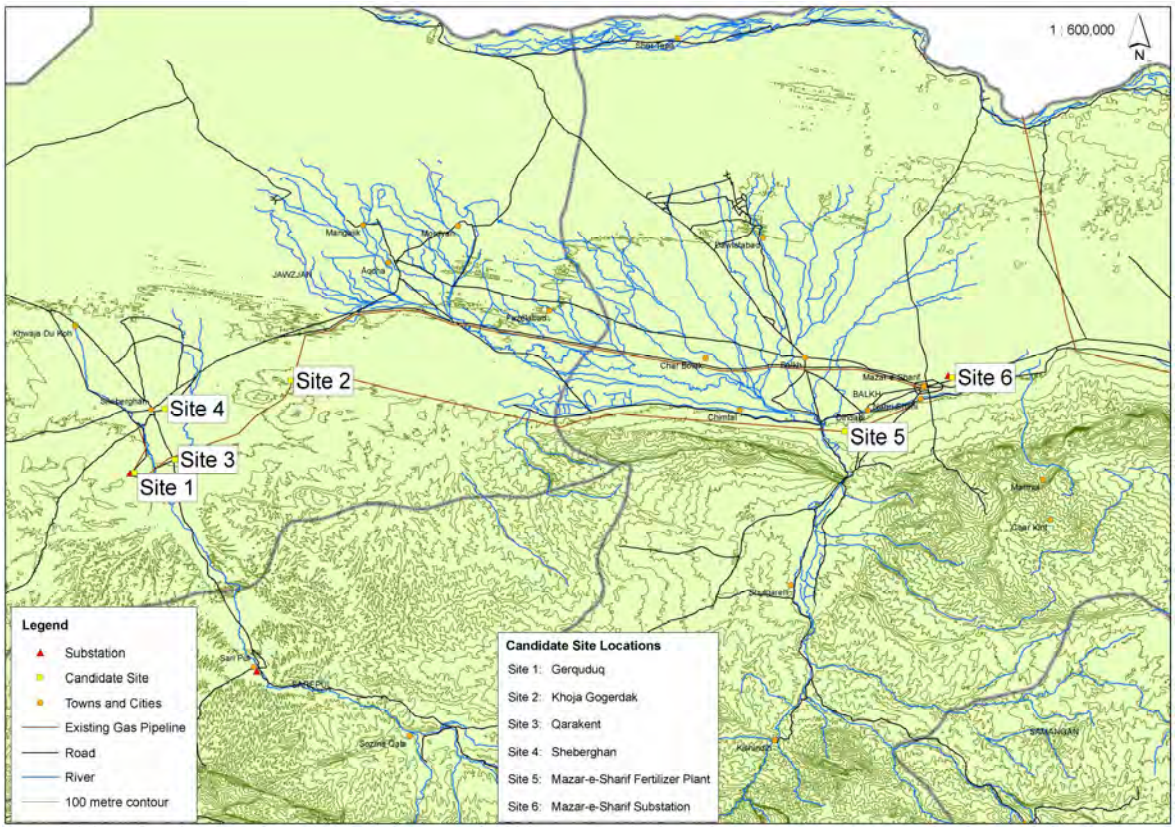

Figure 2.1: Site Locality Plan

On 6 March Sewell met Mr Dost Mohammad Amin, Deputy Minister of the Independent Department for the Environment. The purpose of the meeting was to determine the current status of environmental legislation in Afghanistan including any statutory permitting processes associated with the development and operation of a fossil-fired power generation plant.

There is currently no legal permitting process in Afghanistan governing the development and operation of a fossil-fired power generation plant. The environmental legal system (as with the overall legal system) in Afghanistan is at an early stage of development. No environmental law is yet in place covering control of air, water and soil pollution, overall environmental planning and EIA etc. The Independent Department of Environment (IDOE) is the Government agency responsible for the environment. The IDOE operates at a ministry level under the Minister for the Environment. With technical assistance from the United Nations Environment Programme (UNEP) and the Asian Development Bank, the IDOE has prepared a Draft Environmental Protection Act which is currently being translated into Dari for circulation to Government departments for comment. The proposed law covers interalia, institutional arrangements, environmental management principles, integrated pollution control, natural resource conservation, development planning (including environmental impact assessment) and compliance and enforcement. Once passed into law, the Act will provide an overall

environmental framework law from which environmental regulations will be established in a staged manner.

Until such time as the Environmental Protection Act is passed, the arrangements for EIA in particular remain the domain of donor organisations. In the interim period the IDOE is taking steps to develop formal EIA procedures for Afghanistan through the preparation of a series of guidelines. Seven guidelines are currently proposed of which Guideline Nº 1 - "Screening of Projects" has been completed. The guidelines will form the basis of an administrative process which can be adopted by the Transitional Islamic State of Afghanistan. Agencies involved in infrastructure development will be encouraged, through the IDOE, to adopt the environmental guidelines as best practice even though such guidelines cannot be enforced without relevant legislation.

In the absence of environmental legislation and in accordance with the Terms of Reference for this Feasibility Study, World Bank environmental impact assessment guidelines[1], including pollution control guidelines for thermal power plants[2], will be followed. Reference will also be made to relevant sections of the IDOE Draft EIA Guideline Nº 1.

[1] World Bank, 1998. *Environmental Assessment Sourcebook* 3 volumes Washington D.C. IBRD.

[2] World Bank 1999. *Pollution Prevention and Abatement Handbook 1998 Toward Cleaner Production* Washington D.C. IBRD.

2.2 Site Activities: Mazar-e-Sharif & Sheberghan

2.2.1 Northern Transmission System

Breckon and Campbell undertook field surveys for 03 - 05 March along the western part of northern transmission system. This included:

- Inspection of the existing 72 km single circuit 110 kV transmission line between Andkhoy and Sheberghan including the 110/35/6 kV Andkhoy and 110/35/6 kV Gerquduq (Sheberghan) substations
- Assessment of the non-operational and partially destroyed Gerquduq to Mazar-e-Sharif 110 kV transmission line
- Discussions with MEW officials at Andkhoy, Sheberghan and Mazar-e-Sharif
- The Gerquduq to Sarepul 60 km single circuit 110 kV transmission line (currently operating at 35 kV) had been inspected on a previous occasion.

2.2.2 Mazar-e-Sharif Substation

On 6 March Cutfield and Treleaven joined Breckon and Campbell in Mazar-e-Sharif. An inspection of the Mazar-e-Sharif Substation site was undertaken.

Figure 2.2: Mazar-e-Sharif Substation

This existing DABM 110/35/6 kV substation is located on the north-west outskirts of Mazar-e-Sharif City. This substation is a fixed node for the proposed 220 kV transmission link. Existing land use issues are considered minimal. A tank farm is located adjacent to the site and what appears to be an industrial area. Gas supply to this site would require approximately 90 km of replacement pipeline along existing easements, as well as approximately 20 km of new pipeline and associated easement. A reticulated water supply exists in the vicinity of the site, however a groundwater source is likely to be required for power station consumption. This would be an issue as many local wells also exist in the area.

2.2.3 Mazar-e-Sharif Fertiliser Works

An inspection of the Mazar-e-Sharif Fertiliser Works site was undertaken on 6 March. The Maunsell Power team were shown around the site by the President of the Fertiliser Factory, Engineer Abdulrahman. The potential site for the new generation is next to the existing fertiliser plant and the available land is owned by the government. Current land use issues are minimal. The site is approximately 30 minutes drive south-west from the outskirts of Mazar-e-Sharif, close to the township of Dihdadi. The fertiliser plant is a large, Government-owned, Ammonia-Urea complex constructed by the Russians in 1972. It is the major employer of labour in the region, with a current workforce of around 2,700. It is noted that the fertiliser plant requires significant capital for refurbishment if it is to remain viable.

Figure 2.3: Mazar-e-Sharif Fertilizer Plant 35 kV Switchyard

Gas is supplied from the Khoja Gogerdak field via a 320 mm pipeline 90 km long. The plant is operating at reduced capacity due to availability of sweet gas. An associated cogeneration facility appears to be running at 18 MWe out of a capacity of 48 MWe. The fertiliser plant has

produced 300-400 tonnes per day in the past, but is now restricted to 100-110 tonnes pert due to the lack of gas. The plant has five boilers rated at 75 tonnes per hour and 39 Barg, producing steam for both the fertiliser process and electricity generation in four 12 MWe backpressure turbines. These let steam down to 11 Barg and 6 Barg. The fertiliser plant represents additional potential co-generation opportunity, through the installation of gas turbines.

The Plant requires 'sweet' gas for their process. The gas fields at Sheberghan would appear to be only capable of continuing significant production of sour gas reserves. The Fertiliser Plant is therefore vulnerable unless it can secure sweet gas at a higher pressure. Any new gas processing plant installed at Sheberghan could be sized to be capable of handling sufficient gas quantity to supply the fertiliser works as well. Compressors would need to be considered to boost the pressure in the supply line.

The existing fertiliser plant 35 kV switchyard is connected to Mazar-e-Sharif substation by a single circuit 35 kV transmission line. Both the transmission line and the fertiliser plant 35 kV switchyard would therefore need upgrading to 220 kV if this site was selected for the new generation plant.

The existing pipeline easement will be available for power station gas supply, but the existing pipeline would need refurbishing and/or replacement. Water for the fertiliser plant is from the nearby Balkh River. A local engineer advised that the Balkh River flows at 50-150 m^3/sec; the fertiliser works currently uses about 3m^3/sec. An off-take for power generation from that source, or potentially from groundwater, is feasible.

2.2.4 Discussions with Sheberghan DABM

The Maunsell Power team had discussions with Eng Mohammad of Sheberghan DABM followed by initial site visits to Gerquduq, Qarakent, Khoja Gogerdaq and Yatimtaq. Information gathered during the initial site visit on 6 March and subsequent site visits on 9, 10 and 12 March are consolidated in Sections 2.2.7 and 2.2.8.

Discussions with DABM Eng Mohammad gave rise to the following information. Sheberghan has a population of 200,000 of which 25,000 are electricity customers. The current electricity load of Sheberghan is 4.5-8.5 MWe. Afghan Gas Company was the largest customer at 7.5 MWe for gas processing. Sheberghan has no other major industry apart from the gas industry but wishes to start a steel and stone cutting operation. There is an abandoned gas turbine power plant at Gerquduq next to the Sheberghan (Gerquduq) substation and the Gerquduq Gas Treatment Plant. Currently Afghan Gas only use lighting and heating as the processing plants are not working.

2.2.5 Inspection of Hairatan Bridge

The Hairatan (road and rail) bridge, which spans the Amudarya River and forms an important cross-border transport link with Uzbekistan, was inspected on 8 March to determine the availability of the bridge as a cross-border transport route for heavy plant and equipment. The Hairatan Bridge is large steel truss combined road and rail bridge with concrete deck and about 8m headroom. A heavy lift gantry is present on a siding for transferring from rail to truck. However, the one kilometre access road to the gantry needs to be upgraded. It might therefore be easier to tranship heavy equipment on the Uzbekistan side. The main road from Mazar-e-Sharif to the Hairatan border is sealed with no bridges, few curves, flat or gentle grades and will require only very limited upgrading for heavy load transport.

Figure 2.4: Hairatan Bridge Looking Towards Uzbekistan

2.2.6 Meeting with DOG, MMI, Mazar-e-Sharif

Cutfield visited the Department of Oil and Gas (DOG), Ministry of Mining and Industry (MMI) in Mazar-e-Sharif on 8 and 10 March and met the following staff:

- Eng Abdul Kuddos - President -Oil and Gas
- Eng Nazir Mohammad - Deputy Assistant Oil and Gas
- Eng Abdul Razok – Director General Transport
- Eng Abdul Wassie - Chief Geologist
- Eng Hussain- Drilling Engineer
- Eng Mohammad Hamaoun - Director of Technical processes
- Eng Gulam Naqshvanv - Specialist Geophysical Processes
- Eng Bakhtulah - Chief Engineer.

DOG understand that the ADB has a USD 24.75 million programme to:

- Rehabilitate/reconstruct gas pipelines between Sherberghan - Mazar-e-Sharif and Sheberghan - Fertiliser Works
- Study and prepare a programme for rehabilitating gas wells
- Ascertain a programme for gas processing plants for gas for domestic use and for the Fertiliser Works.

Approximately 500,000 m^3/day is needed for 100 MWe. The previous power station used 1 m^3 of gas to produce 1 kWh. The proposed new power station will produce around 4-5 kWh from 1 m^3.

No drilling or well field maintenance would appear to have occurred in the gas fields for more than 16 years.

A copy of the pipeline layout drawing by Afghan Gas was provided to the team. The pipeline layout drawing indicated that gas from Yatimtaq goes to Gerquduq. The MMI officials advised that Gerquduq was their preferred site for the power station.

2.2.7 Gerquduq Site Visits

The Gerquduq power plant site was visited on 7, 9, 12 March. This comprises three adjacent installations; the in-use Sheberghan (Gerquduq) substation, the abandoned gas-fired generation station and Gerquduq Gas Treatment Plant. The site is flat to gently sloping.

The available land is government-owned, is at elevation 477 m, and borders semi-desert land with minimal observed utilisation. There is a sealed road to the site, which is approximately a 15 minute drive south-west from the outskirts of Sheberghan. The existing DABM 110/35/6 kV substation is supplied by 110 kV from a single circuit transmission line from Andkhoy, and was previously connected by a 110 kV transmission line to Mazar-e-Sharif (about 20 km of this was destroyed). The substation also supplies power to Sarepul, approximately 60 km to the south by a 110 kV transmission line (temporary operating at 35 kV).

Figure 2.5: Sheberghan (Gerquduq) Substation

The abandoned generation station, which ceased production in 2000, comprised eight aero-derivative open-cycle gas turbines coupled to small generators each capable of about 2.5 MWe output. The units were air-cooled, with no noise attenuation, and only ever delivered 1.7 MWe each

Figure 2.6: Gas-Fired Aero Engines at Gerquduq Generation Station

The Gerquduq Gas Treatment Plant was commissioned in 1979 and operated until 1989. It was designed to process 6 million m^3/day and used diethyl amine for H_2S / CO_2 removal. There are

33 wells in Gerquduq gas field field of which 11 are currently operating; Eight wells produce low sulphur (sweet) gas and 3 higher sulphur (sour) gas. Currently 300,000 m^3 per day of sweet gas is sent from the Gerquduq gas field to the Fertiliser Works at Mazar-e-Sharif via Yatimtaq. Gas is typically 95% methane, 3.5% $C0_2$, and 1.5% ethane, propane, pentane. The gas out pressure is currently 20 Barg. Higher sulphur gas is sent through Yatimtaq or to Mazar-e-Sharif for domestic use. The building for an unfinished pipeline compressor facility is about 18 m by 84 m and could be converted for power station use.

Figure 2.7: Qarakent Water Supply Pumping Station

Water supply for the gas treatment plant is from a groundwater well-field and pumping station at Qarakent some 6 km to the ENE. The water pipeline is designed to transport approximately 2,000 m^3 per day. A water tank at the pump site holds 1,000 m^3. The tank appears to be in usable condition.

2.2.8 Khoja Gogerdak and Yatimtaq Site Visits

The Khoja Gogerdak site is adjacent to the disused Khoja Gogerdak gas treatment facility at elevation 500 m. It was visited on 07, 10 March. The land is government owned. The land is gently sloping currently used for communal grazing. Site access is by approximately 13 km of unsealed road from the Sheberghan to Mazar-e-Sharif highway; travel time by vehicle to Sheberghan is approximately 30 minutes.

The gas treatment facility, which has not been used for 16 years, removes condensate and CO_2 but not H_2S. The gas treatment plant is owned by the Afghan Gas Company. Currently gas bypasses the plant and only undergoes two-phase separation, i.e. liquids and knockout. The separated water is dumped to ground at about 0.5 m^3 per day. Gas pressure is only 9 Barg at the separators. The gas gathering manifolds are on the adjacent hills and only two combined multiphase flow lines run to the main gas processing plant. There are small two-phase separators

at the gas gathering manifolds and water/condensates are stored in tanks. Thirty nine wells have been drilled in this area, 22 of which are now working, some with water breakthrough. Water needs to be blown down out of the structure daily for 15-20 minutes to prevent the casing filling with water. Twelve wells are water logged and cannot flow as the head of water is excessive. Five wells have been damaged. The water line to Khoja Gogerdak from Qarakent formerly supplied at 620 m^3/day.

The Yatimtaq gas gathering manifold and separators are adjacent to the entrance to the Khoja Gogerdak processing plant. Only one well is flowing and is connected to the sour gas line from Gerquduq. It is choked to 12 bar to match export pressures from Khoja Gogerdak.

Figure 2.8: Khoja Gogerdak Site

2.2.9 Qarakent Site Visits

The site area is in the valley of the Sarepul River adjacent to the Qarakent water supply pumping station at elevation 380 m. Adjacent land is either extensively cultivated or utilised for very low technology petrochemical refining. The site is adjacent to the main Sheberghan to Sarepul road, about 9 km (15 minutes drive) from the outskirts of Sheberghan. Gas pipelines from the three producing fields (Gerquduk, Khoja Gogerdak and Yatimtaq) pass through the site area. The site is approximately at the lowest point of these gas pipelines.

The Qarakent groundwater supply consists of twelve 50 m deep wells with down hole water pumps lifting water to a reservoir holding 1,000 m^3 of water. Only two wells are currently operational. All wells need rehabilitation (screens, pumps, headworks and delivery lines). Currently the pumping station comprises two pumps (third removed) operating at 23 atm mainly static lift. The pumps and 290 mm pipelines to the gas fields are old, in very poor condition and

according to Afghan Gas Company (Engineer Said Rahmin Bakhiar), need replacing. The site was visited on 7, 10 March and is close to water, existing gas lines and proposed new transmission lines and would be feasible for the power station although land purchase/compensation/resettlement will be required.

Figure 2.9: Qarakent Site

2.2.10 Site Visit to Eastern Sheberghan Potential Industrial Zone

This site area is on the Eastern outskirts of Sheberghan town, on the North side of the highway from Mazar-e-Sharif, between the Sheberghan town gate and the current extent of the built up area of the town. The available land is not presently occupied or productively used and government ownership is assumed. No concentration of energy intensive industrial activity was observed in Sheberghan and it appears there is little likelihood that this will develop in the near future. Should the power station be sited at this location however, there is potential for such an industrial zone to develop in the immediate vicinity. The site is isolated from existing gas and water supply routes; approximately 10 km of new pipeline for gas and water and associated easements would be required to service this location. The town fringe location would also require a transmission line route close to existing built-up areas.

Figure 2.10: Sheberghan Town Site

2.2.11 Discussions with Afghan Gas Company and MMI

The Maunsell Power team had discussions on 9, 10, 12 March with the President of Afghan Gas Company, Engineer Habibullah, and Technical Assistant Engineer Mohammad Nazif. The Afghan Gas Company will own the gas pipelines and gas processing plant from wellhead to the power station. Engineer Habibullah emphasised that the study should consider gas to supply the Fertiliser Works at full capacity (1million m^3 per day (now 350,000 m^3 per day), domestic at 1 million m^3 per day (now 500,000 m^3 per day) and the new power station (Maunsell Power estimate 1 million m^3 per day). Industries previously using gas included bakeries and textiles, now disconnected. Afghan Gas have not had problems with the Gerquduq to Yatimtaq pipeline, currently carrying sweet gas. Water is drained from low points manually using gas pressure. Eng Habibullah noted that ADB / World Bank have promised USD 24 million to rehabilitate pipelines and gas processing plant.

A set of questions was provided to the Maunsell Power team on 12 March by Dr Mangal, on behalf of Afghan Gas. The Maunsell Power team's understanding of the questions after discussing the letter with Dr Mangal is provided below. A copy of the original letter along with a typed version, which represents our understanding of what is being asked after reading the questions and discussing the text of the letter with Dr Mangal, is provided in Appendix C.

The Maunsell Power team explained, on behalf of AEAI that our part of the study did not specifically concern gas supply issues apart from those required for the proposed power station. We advised that a written response to these questions would be provided by AEAI to MMI.

During the visits to the various Government agencies in Mazar-Sharif and Sheberghan, the team became aware of concern, usually during the formal welcome, that there had been numerous foreign delegations through the area in the last 2-3 years, but so far no physical work had actually commenced. These concerns were expressed in particular by Engineer Mohammad, Regional Director DABM Sheberghan, and Engineer Habibullah, President of Afghan Gas Company.

Regarding land issues for gas and water pipelines, the following information was provided by Afghan Gas Company. When the original pipelines were laid, the Russians demarked a 1 km corridor within which entry by the public, including farmers, was prohibited. Following the Russian withdrawal the 1 km zone was not policed and the land has at different times been frequently used for cultivation. Mr Ahmadi of MMI advised that on this basis MMI would negotiate with land owners/users within the 1 km corridor to ensure any new pipelines could be laid. For new pipelines outside the existing corridors the Government would negotiate with landowners a compensation package for use of the land.

Mr Ahmadi noted that the Draft Hydrocarbon Law is in its final stages of drafting and is programmed to be approved by the Government during 2005. The Hydrocarbon Law will include provisions for the acquisition of land for Government projects where they are in the National interest.

In regard to construction costs, the following cost data was provided by Afghan Gas Company:

Bricks	USD 20/m^3
Cement	USD 90/tonne
Sand	USD 5/m^3 (loading only, excludes transport)
Aggregate	USD 6/m^3 (including transport)
Wood	USD 220/m^3
Reinforcing steel	USD 600/tonne
Gypsum	USD 70/tonne
Excavation and backfill	USD 1/m^3 (using machine) or USD 5/m^3 (by hand)
Foundation stone	USD 12/m^3
Concrete	USD 40/m^3 (without steel) USD 50/m^3 for on-site preparation
Unskilled labour	USD 6-10/day
Skilled labour	USD 20/day
Construction engineers	average USD 1,000/month, range (700 – 1,500/month).

Apart from cement and steel, all other construction materials can be sourced locally.

2.2.12 Development of Site Selection Matrix

On 11 March the Maunsell Power team developed and refined a site selection matrix, which involved assigning ranking and weighting values to site selection elements as described in Appendix D.

2.3 Final Site Activities: - Kabul

The remaining field team (Cutfield, Treleaven, Burns Sewell) returned to Kabul on 13 March. Work continued on preparation of the Site Selection Report.

On 14 March, Cutfield and Treleaven held a site survey debriefing meeting with Jack Whippen. Debriefing discussions focused on discussing findings from work done on Site Selection report in the field on the Gerquduq site.

On 14 March Sewell and Burns had meetings with the Department of Meteorology and met with George Bouma of the United Nations Environment Programme (UNEP). UNEP are currently assisting the new Independent Department of Environment in developing environmental legislation and staff capacity building. Discussions focussed on current capacity of the Department for the Environment and the status of draft environmental legislation to confirm information provided in earlier discussions by the Deputy Minister for the Environment.

The remaining Maunsell Power team left Kabul to return to home office in New Zealand on 15 March.

3 Site Selection

3.1 Electrical Considerations

3.1.1 Background

The existing power sector in Afghanistan is in an extremely run-down and dilapidated condition with much of the plant and equipment severely damaged as a result of the country being ravaged through 23-years of war. This has been compounded by a lack of financial capacity to provide maintenance and/or repairs.

Approximately 10% of the population of Afghanistan is connected to public power supply, which is unreliable and irregular due to the poor condition of plant and equipment ranging across generation, transmission, distribution and consumer service connections. The existing number of electricity customers throughout Afghanistan is estimated at June 2004 to be around 234,000 (207,408 domestic and 23,031 commercial and 3,335 Government).

At present there are four distinct networks; the Northern area encompassing Mazar-e-Sharif through to Kunduz; the Western area based around Herat; the Central area around Kabul and Jalalabad; and the southern area around Kandahar. The existing electrical system is a mixture of voltage levels; the HV transmission level includes 35 kV, 44 kV, 110 kV, 132 kV and some 220 kV (operating at 110 kV). Medium voltage distribution includes 3.3 kV, 6 kV, 15 kV, and some 20 kV. Low voltage is 3-phase 400/231 V, 50 Hz. The distribution systems are mostly overhead, with some underground distribution in Kabul and several of the larger secondary cities. A significant portion of the transmission and distribution network throughout the country was damaged during the war years; and many kilometres of conductor and electrical equipment was pillaged and stolen. Of the 475 MW generation capacity originally installed (261 MW hydro, 151 MW thermal and 63 MW diesel), much was destroyed or damaged during the conflict resulting in only about 270 MW now available, all of which is old and in frail condition. Table 3.1[3] shows basic quantities pre and post conflict.

Asset	Constructed	Remaining Post-Conflict
HV Transmission	1,640 km	1,270 km
MV Distribution	2,572 km	1,712 km
LV Distribution	4,212 km	2,983 km
Substations	647 MVA	428 MVA
Generation	475 MW	270 MW

Table 3.1: System Assets Pre & Post Conflict

[3] Source: *"Afghanistan's Power Sector: Short Term Critical Investment Options", February 2003, The World Bank, South Asia Energy and Infrastructure, as updated by MWP in May 2004.*

There are existing and planned cross-border supplies to Afghanistan from Turkmenistan, Tajikistan and Uzbekistan in the north and from Iran in the south-west.

In the North, all power for Mazar-e-Sharif is imported from Uzbekistan and Turkmenistan using single circuit lines which are in damaged condition. The Uzbekistan connection is shortly to be rehabilitated and upgraded to 220 kV and the supply extended to Kabul[4].

3.1.2 Northern Transmission System - UZB-MZR-PUL

At present Mazar-e-Sahrif (MZR) is supplied at 110 kV from Uzbekistan (UZB) by a damaged single circuit transmission line via a border river crossing at Hairatan. Under ADB Loan Nº 1977 - *Rehabilitation of the Northern Transmission Link*, this connection will be upgraded to a double circuit 220 kV transmission line, to import up to 150 MW from Uzbekistan. The transmission will be upgraded as shown in Figure . This will ultimately provide a connection to Kabul, via the proposed Pul-e-Khumri (PUL) to Kabul 220 kV 300 MW transmission link. The Naibabad 220 kV switching station will also be funded under the ADB Loan Nº 1977. KfW are expected to finance to rehabilitation and extension of MZR 220/110/35/20 kV substation as well as the new Pul-e-Khumri 220/20 kV substation; at this stage the new 220/20 kV substations at Khulm and Aibak are still awaiting suitable donor funding.

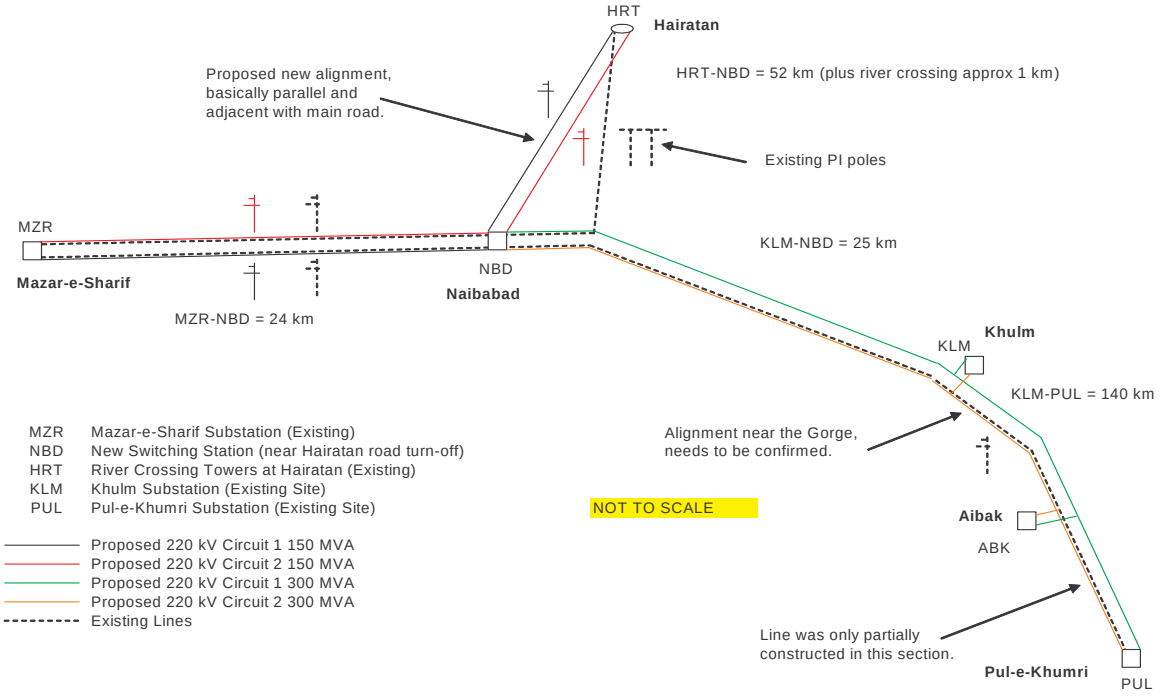

Figure 3.1: Transmission Link UZB-MZR-PUL

[4] The transmission link between Uzbekistan and Pul-e-Khumri is currently being implemented under ADB Loan Nº 1997 - *Emergency Infrastructure Rehabilitation and Reconstruction Project - Rehabilitation of Northern Transmission Link*. The transmission link between Pul-e-Khumri and Kabul is expected to be implemented shortly under Government of India funding.

This northern transmission system will facilitate the export of power from both the proposed Sheberghan Gas Fired Thermal Power Facility and from Uzbekistan (and ultimately also from Tajikistan) to Kabul, to help relieve the dire shortage of power in the central area of Afghanistan including Kabul City.

3.1.3 Northern Transmission System - TUK-SHB -MZR

The western half of the northern transmission system, currently isolated from the eastern half, is supplied at 110 kV from a cross-border supply from Tajikistan, 45 km north of Andkhoy. An existing 110/35/6 kV substation at Andkhoy supplies the area at 35 kV and 6 kV, as well connecting to existing Gerquduq 110/35/6 kV substation by approximately 72 km single circuit 110 kV transmission line from Andkhoy. Gerquduq substation was also previously connected by a 110 kV transmission line to Mazar-e-Sharif (about 20 km of this was destroyed during the conflict period); it also supplies Sarepul, approximately 60 km to the south, by a 110 kV transmission line (temporary operating at 35 kV).

Under ADB financing, a study is currently being carried out by Maunsell Power for the transmission development in this area. Although not yet finalised, it is possible that the transmission will be upgraded as shown in Figure 3.2. The timing of this is still being considered and is subject to a number of factors including the timing of the Pul-e-Khumri to Kabul 220 kV link. In the event that the proposed 22 kV transmission link between Sheberghan and Mazar-e-Sharif is delayed, then the existing 110 kV line over the same route (after repairs) could be used in the interim to evacuate power from the proposed Sheberghan generation to Mazar-e-Sharif.

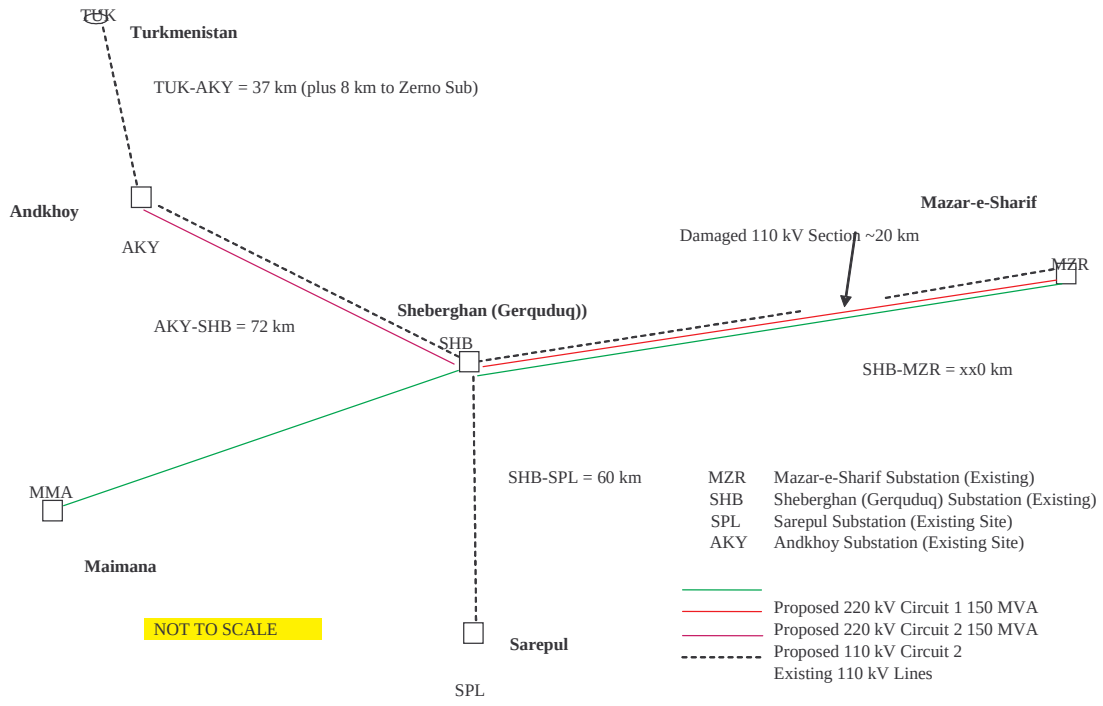

Figure 3.2: Transmission Link TUK-SHB-MZR

3.1.4 Connection of New Sheberghan Generation

As noted above, the northern transmission system is currently in the process of being upgraded to 220 kV to provide interconnection of cross-border supplies and to allow export of power to Kabul. This is very timely from the perspective of connecting the proposed new Sheberghan generation.

Depending on the final location selected, the proposed Sheberghan generation can be connected to the Sheberghan Substation by a dedicated transmission line; or by routing the proposed Sheberghan to Mazar-e-Sharif transmission lines via the proposed Sheberghan generation. For all of the six sites being considered, either option can be easily accommodated from electrical considerations without due concern.

3.2 Prescreening

3.2.1 Initial Assessment Criteria / Land Availability and Suitability

Development of the generation facility is based on utilising the natural gas resource in the Sheberghan area. Sites for the facility were therefore restricted to the Sheberghan / Mazar-e-Sharif region. Sites outside that region which would require construction of considerable lengths of gas transmission pipeline were not considered. A general assessment of the Sheberghan to Mazar-e-Sharif area was made by the Maunsell Power team in the context of required project inputs, economics, social and environmental impacts, with assistance from AEAI key personnel.

Pre-mobilisation discussions were conducted in Kabul with representatives of MMI and MEW. Dr Mangal and Eng Ahmadi, representatives of MMI joined the study team during the field assessment phase in order to benefit from their technical knowledge of the gas fields in Sheberghan.

Potential site localities were chosen by assessing the following coarse criteria.

- **Land ownership**. The site should occupy government owned land. The main drivers for this are to minimise land purchase costs, and reduce implementation time by avoiding negotiated compensation and the need for resettlement process.
- **Proximity to resources**. The most obvious resource required for the project is the gas found in the fields approximately centred on Sheberghan City. A secure water supply is also necessary as an input to gas treatment and thermal electricity generation, although water consumption requirements vary according to the generation technology adopted. Existing infrastructure assets were included as resources for the purposes of initial screening. These included existing electricity grid transmission nodes (substations), large industrial entities (fertilizer plant at Mazar-e-Sharif), the existing gas pipeline network and gas treatment facilities.
- **Land access**. The site should be close to the existing road network and as far as possible utilise existing gas and or water pipeline easements. Once again, this factor is driven by minimisation of land purchase costs and issues associated with compensation and re-settlement.
- **Mine clearance**. The selected site should take into account UNMACA's ongoing mine and UXO (un-exploded ordinance) clearance programmes.
- **Local security situation**. The selected site should not increase the prevailing local security risk either during construction or for staff and the station during operation.
- **Customary land use**. Land of marginal economic value is preferred for the selected site. Land which is cultivated, extensively grazed, or occupied by an existing economic activity should be avoided. Where any local zoning rules apply, sites should be located in land allocated for industrial use.
- **Preliminary geographic assessment**. The region including Sheberghan, Mazar-e-Sharif and environs is geographically similar in terms of climate, elevation, seismicity and soil

type. The screening process identified site specific geographic risks such as potential for flooding.

- **Potential social and environmental impacts**. Site selection to minimise potential adverse social impact was chiefly influenced by avoiding land use conflict as much as possible. Proximity to existing population centres as a potential labour source was considered as a favourable social impact. The study area comprised predominantly similar natural environmental features; selected sites were screened to ensure that they did not occupy rare or unusual habitats. Screening also included consideration of station noise and airborne contaminants on the neighbouring environment.

3.2.2 Initial Selection Elements

Selection elements for site evaluation purposes were compiled by the team before mobilisation to the study area, based on previous experience and a preliminary desk study of the region. The selection elements came under twelve assessment categories as indicated below:

- Land availability and suitability, including topographical and meteorological considerations
- Transmission grid connection considerations
- Water supply
- Fuel supply
- Construction cost factors
- Factors influencing the provision of civil facilities and site development
- Environmental considerations
- Social considerations
- Safety and security considerations
- Operations and maintenance
- Risk considerations
- Economics.

The following is a list of site selection elements grouped into the twelve categories is listed above. This comprehensive list is later reduced by removing elements that have a common and generally equivalent influence on each of the candidate sites.

100 Land Availability and Suitability
101 Land availability
102 Plot size
103 Clear ownership/title
104 Actual or potential land disputes
105 Land Zoning
106 Potential for future expansion
107 Site orientation
108 Buffer zones
109 Land utilisation
110 Site drainage
111 Erosion potential
112 Katabatic wind potential
113 Any effects on wetlands
114 Land free from hazardous materials
115 Pipeline Easements
116 Site accessibility for staff and services
117 Dust storm frequency and intensity

118 Proximity to important facilities
119 Site altitude
120 Temperature ranges T5 and T95
121 Wind data
122 Seismic zone
123 Freezing potential
124 Snow loads
125 Flooding potential
126 Air inversions

200 Transmission Grid Connection
201 Existing Transmission System
202 Planned Transmission System
203 Distance to Transmission Grid
204 Transmission Voltage
205 System Parameters

300 Water Supply
301 Distance to surface water supply
302 Intake structure options
303 Treatment required i.e. Reverse Osmosis, filtration
304 Ground Water Availability
305 Present needs vs future needs for 100 MW unit
306 Water Quality
307 Water Rights
308 Water wells or bores
309 Fire Fighting supply

400 Fuel Supply
401 Back up fuel
402 Access to Sweet or sour gas
403 Pressure of NG
404 Temperature of gas

500 Construction Cost Factors
501 Ground conditions and associated foundation systems
502 Local infrastructure facilities
503 Site benching requirements / topography
504 Availability of finishing materials / landscaping
505 Spoil disposal options
506 Construction accommodation requirements
507 Construction lay-down areas and secure storage
508 Concrete manufacturing infrastructure
509 Locally available construction materials
510 Domestic delivery routes
511 Weight and volume of modules
512 Construction equipment availability
513 Construction labour availability
514 Size of site
515 Location relevant to at least 2 independent sources of fuel
516 Future expansion options
517 Indoor / outdoor units
518 Dust filtration requirements
519 Cold weather starting especially cooling tower, oil systems, etc.
520 Compressed air systems
521 Control system

600 Civil Facilities and Site Development
601 Soils / geotechnical
602 Natural hazards: Earthquakes
603 Natural hazards: Avalanches
604 Natural hazards: Landslides / subsidence
605 Natural hazards: Bluffs cliffs
606 Natural hazards: Bodies of water and shifting river beds
607 Existing Sewage / garbage disposal areas
608 Site development: Grading and drainage
609 Site development: Storm-water disposal
610 Site development: Sanitary / Foul-water disposal

611 Existing Roadways
612 Car and truck access
613 Airports
614 Building fabric selection

700 Environmental Considerations
701 Rules and regulations
702 Air pollution
703 Air shed issues
704 Noise control
705 Vibration
706 Waste water
707 Water resource conflicts
708 Existing and potential land use
709 Ecology
710 Relief valves / flaring
711 Aesthetics / Visual buffering
712 Solid waste disposal
713 Air contaminant sources
714 Predominant wind direction

800 Social Considerations
801 Political acceptance
802 Heat sink for heating from power station
803 Proximity of available workforce
804 Ongoing international support requirements
805 Technology transfer opportunities
806 Future township expansion
807 Socio-political issues
808 Access to first aid and medical
809 Local acceptance
810 Historic / cultural interest
811 Displacement of inhabitants
812 Ease of land acquisition

900 Safety and Security
901 Gas line vulnerability
902 Construction personnel vulnerability
903 Plant operating personnel vulnerability
904 Power plant vulnerability
905 Local fire brigade capability
906 Distance to roads
907 Distance to residential areas
908 Curfew constraints

1000 Operations and Maintenance
1001 Proximity to load centre
1002 Staffing
1003 Black starting
1004 Local expertise (maintenance contractors)
1005 Cathodic protection
1006 Equipment availability
1007 Cold and hot weather operation
1008 Site access in adverse weather conditions
1009 Preventative maintenance approach
1010 Training
1011 Post start-up operational logistics

1100 Risk
1101 Location risk for exporting power
1102 Schedule risk
1103 Location risk for fuel supply
1104 Gas reserves
1105 Ownership issues
1106 Water availability risk
1107 Grid Interconnection timing

1200 Economics
1201 Base load operation
1202 Proximity to load centre
1203 Cost of transmission of gas to and electricity from plant
1204 Cost of auxiliaries
1205 Sales of by-products
1206 Levelised GNPO for ambient temperatures and auxiliaries
1207 Value of sales
1208 Transmission line distance
1209 Gas pipeline distance
1210 Gas quality
1211 Efficiency
1212 Cogeneration potential

1213 Integration into large users

1214 Performance drop-off in summer with fin fan coolers

1215 Insurance

3.3 Initial Site Assessment

Initial screening was carried out using the criteria and rationale described in Section 3.2 above. Six potential sites were identified for comparative assessment. Closest proximity of the required area of vacant land to an existing or potential future infrastructure asset was used as the basis for identifying each candidate site for the power plant. This approach is consistent with the pre-screening process outlined in Section 3.2. Given the low level of land development in the region, candidate sites were identified on land immediately adjacent to existing assets. The six candidate sites are indicated below:

- Site 1, at Gerquduq in the vicinity of the existing DABM substation and the Afghan Gas Company well field and processing facility.
- Site 2, at Khoja Gogerdak adjacent to the Afghan Gas Company well field and processing facility.
- Site 3, at Qarakent, in the vicinity of the existing water pumping station, which supplies potable water to Sheberghan City and the Afghan Gas Company assets at Gerquduk and Khoja Gogerdak
- Site 4, on the Eastern outskirts of Sheberghan City, on land identified as a potential industrial zone
- Site 5, adjacent to the Ministry of Mines and Industry fertilizer plant at Qala Jangi, near Mazar-e-Sharif.
- Site 6, adjacent to the existing DABM substation at Mazar-e-Sharif.

3.3.1 Locality Description

The relative location of each site and surrounding landmarks is shown in Figure 3.3 below.

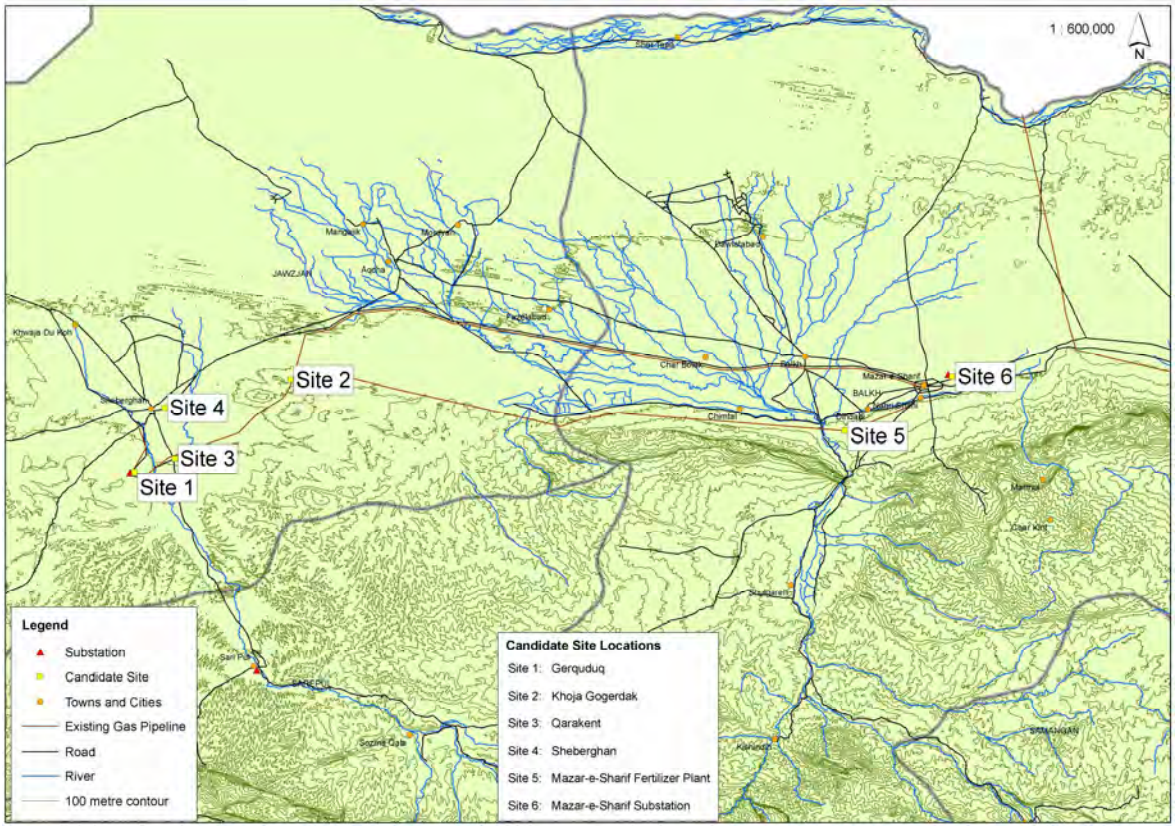

Figure 3.3: Site Locality Plan

3.3.1.1 Site 1 - Gerquduq

Figure 3.4: Gerquduq Site

The available land is government owned and on the edge of the desert with minimal observed land utilisation. There is a sealed road to the site which is approximately a 15 minute drive south-west from the outskirts of Sheberghan. The existing DABM 110/35/6 kV substation is supplied by 110 kV from a single circuit transmission line from Andkhoy, and was previously connected by a 110 kV transmission line to Mazar-e-Sharif (about 20 km of this was destroyed during the conflict period). The substation also supplies power by a 110 kV transmission line (temporary operating at 35 kV) to Sarepul, approximately 60 km to the south. Adjacent to the substation is an abandoned generation station, which comprised eight jet engines coupled to small generators. The units were air-cooled, with no noise attenuation, run on the local gas supply. Gas from the Gerquduq, Khoja Gogerdak and Yatimtaq fields is piped to the adjacent facility. Water is pumped to the gas treatment plant from nearby Qarakent.

3.3.1.2 Site 2 - Khoja Gogerdak

The available land is government owned. The site area is on a hillside which slopes moderately, with the land currently used for communal grazing. The site access is approximately 13 km of unsealed road from the Sheberghan to Mazar-e-Sharif highway; travel time by vehicle to Sheberghan is approximately 30 minutes. Currently, gas from the Khoja Gogerdak and Yatimtaq fields is collected at the adjacent facility, and water is piped from Qarakent to the gas processing facility owned by the Afghan Gas Company.

Figure 3.5: Khoja Gogerdak Site

3.3.1.3 Site 3 - Qarakent

Figure 3.6: Qarakent Site

The site area is in the valley of the Sarepul River adjacent to the water supply pumping station. Adjacent land is either extensively cultivated or utilised for very low technology petrochemical refining. The site is adjacent to the main Sheberghan to Sarepul road, about 15 minutes drive from the outskirts of Sheberghan. Gas pipelines from the three producing fields (Gerquduq, Khoja Gogerdak and Yatimtaq) pass through the site area. The site is approximately at the lowest point of these gas pipelines.

3.3.1.4 Site 4 - Sheberghan Town

Figure 3.7: Sheberghan Town Site

This site area is on the Eastern outskirts of Sheberghan town, on the North side of the highway from Mazar-e-Sharif, between the Sheberghan town gate and the current extent of the built up area of the town. The available land is not presently occupied or productively used and government ownership is assumed. No concentration of energy intensive industrial activity was observed in Sheberghan and it appears there is little likelihood that this will develop in the near future. Should the power station be sited at this location however, there is potential for such an industrial zone to develop in the immediate vicinity. The site is isolated from existing gas and water supply routes; approximately 10 km of new pipeline for gas and water and associated easements would be required to service this location. The town fringe location would also require a transmission line route close to existing built-up areas.

3.3.1.5 Site 5 - Mazar-e-Sharif Fertilizer Plant

This site area is next to the existing fertilizer plant and the available land is owned by the government. Current land use issues are minimal. The site is approximately 30 minutes drive south-west from the outskirts of Mazar-e-Sharif, at Qala Jangi. The plant was built in 1972 and is the major employer of labour in the region, with a current workforce of around 2700 staff. Gas is supplied to the fertilizer plant for use in the fertilizer manufacturing process and for steam generation, from the Khoja Gogerdak field, approximately 90 km to the West. The existing easement will be available for power station gas supply but replacement of the pipeline would be anticipated. An existing steam turbine co-generation plant exists at this location. The fertilizer plant represents additional potential co-generation opportunity in the region, through the

installation of gas turbines. Water for the fertilizer plant is taken from the nearby Balkh River, an off-take for power generation from this source or potentially from ground water is feasible.

Figure 3.8: Mazar-e-Sharif Fertilizer Plant Site

3.3.1.6 Site 6 - Mazar-e-Sharif Substation

This site area is next to the existing DABM 110/35/6 kV substation on the north-west outskirts of Mazar-e-Sharif City. This substation is a fixed node for the proposed 220 kV transmission link. Existing land use issues are considered minimal. Gas supply to this site would require approximately 90 km of replacement pipeline along existing easements, as well as approximately 20 km of new pipeline and associated easement. A reticulated water supply exists in the vicinity of the site, however a ground water source may need to be developed for power station consumption.

Figure 3.9: Mazar-e-Sharif Substation Site

3.3.2 Refinement of Selection Elements

The first screening of the six sites above was undertaken against the full list of 146 selection elements. A number of these elements were found to not appreciably vary between sites or in several instances be irrelevant, and could therefore be eliminated from the site ranking and weighting process. These elements are listed in Appendix D, Table 1, with the justification for their exclusion from the remainder of the assessment process.

3.4 Ranking Criteria

3.4.1 Background to Site Selection Methodology

The site selection methodology adopted by the project team is a form of Multi Criteria Analysis (MCA). An overview of MCA techniques is provided in Section 3.4.3, below. The contributing attributes from this study that make an MCA approach attractive are:

- The large number of criteria and sub-criteria (as described in section 3.2) to be evaluated across a number of options (potential sites) within the timeframe available
- The ability to rank each site according to its performance against each selection element
- The ability to apply weightings to groupings of criteria to determine relative scoring for each site
- Transparency, internal consistency and logical soundness are required to be demonstrated in the application of qualitative assessments, especially because of the variable quality and quantity of data available to support analysis

3.4.2 Development of Site Ranking Scores

A ranking assessment score was developed and applied for each of the selection elements across every candidate site. The potential ranking scores are between zero and four. The most desirable and least desirable qualities for each selection element are defined in Appendix D, Table 2, with scores of 4 and 1 respectively.

A ranking assessment score of zero would imply that the candidate site was not feasible due to the influence of that selection element. None of the candidate sites which survived the pre-screening process were allocated a score of zero for any selection element. Ranking justification for each selection element is provided in Appendix D, Table 2.

Each site is allocated a ranking score for each selection element. In the first instance, the site ranking score is given relative to the most and least desirable qualities for the selection element. The basis for allocating the ranking score is a combination of historical information obtained from in-country sources, physical observations made in the field, interviews and discussions with local staff of the various ministries and enterprises which the field team came into contact with, and in the absence of hard data, professional judgement. Site ranking data is provided in Appendix E, Table 4.

3.4.3 Multi Criteria Analysis

3.4.3.1 Introductory Background to Multi Criteria Analysis Techniques

Multi Criteria Analysis (MCA) is a technique of project appraisal that takes into consideration more than one criterion when evaluating alternative projects or project related decision making. The methodology is widely used in particular when the benefits and costs of a particular project outcome vary across a wide range of criteria, are difficult to accurately define, and are both qualitative and quantitative in nature. An MCA technique is well suited to assist in the site selection process for this project because the project assessment is made on the basis of economic, environmental, social and cultural considerations. The main goals of the MCA technique as applied to this study are to yield a preferred power plant site, assist the study team members in articulating and applying their values to the site selection process in a rational and consistent manner, and to document the process.

Suggested references on the theoretical basis of MCA are: R.L. Keeney, H. Raiffa, Decisions with Multiple Objectives, (J Wiley and Sons, New York), or P Vincke, Multicriteria Decision-aid, (J Wiley and Sons, New York)

3.4.3.2 Practical Application of MCA Techniques

MCA techniques are particularly applicable to the decision making processes associated with the implementation of public infrastructure projects where informed decisions are made on behalf of a community or grouping of consumers.

MCA techniques are frequently used as a policy tool by central and local government agencies to determine commitment priorities for a range of potential projects in terms of their costs and benefits to the community. A useful background reference of the role MCA plays in this context is the Multi-criteria analysis manual published by the Office of the Deputy Prime Minister (United Kingdom) (www.odpm.gov.uk, search string “MCA”). The manual contains substantial cross references to the theoretical basis and practical application of MCA in the UK and the EU, with a useful appendix on the range of proprietary MCA software that is currently available.

MCA is also used to assist in the decision making process of funding agencies such as the World Bank and Asian Development Bank (ADB). The project evaluation process to meet ADB funding requirements includes the following steps:

- Identifying projects which are technically feasible.
- Ranking technically feasible projects according to cost effectiveness
- Determining the environmental impact of the ranked projects
- Determining the sociological impact of ranked projects

MCA techniques are used as a rational method of scoring technically feasible projects accounting for economic, environmental and sociological factors; and as a method of evaluating ranking sensitivity by varying the weightings given to these criteria.

3.4.3.3 Project Entity and Field Team Experience with MCA Techniques

Maunsell Ltd has a track record of using MCA techniques as part of funding agency and local government project appraisal. The Advisory Services group from Maunsell's Auckland office has developed "Optimised Decision Making Guidelines" for use by local government agencies as a means of achieving a consistent and sustainable approach to infrastructure decision making. MCA techniques are an integral part of this approach.

Within the Maunsell Power Team, the Environmental Specialist (Alan Sewell), and Social Safeguards Specialist (Shanny Campbell) have used MCA techniques on previous funding agency investigations. Reference projects include:

- ADB project preparatory technical assistance projects, using MCA to evaluate social, economic and poverty criteria to help determine whether particular project sub-components are selected to become part of an ensuing loan project (S Campbell)
- World Bank Vietnam Remote Area Rural Electrification Fund, using MCA to rank potential micro hydro power developments by assessing technical, poverty, local capacity, community support, and environmental sensitivity criteria (A Sewell)

3.4.3.4 Voting Panel Credentials and Scoring Allocation Logic

The scarcity of accurate and reliable cost data relevant to Afghanistan conditions, from which the selected sites could be ranked on an economics basis, meant that much of the selection element ranking and weighting scores as described in this section and the following section are based on value judgements formed by the study team. It was fully understood by the study team that the application of MCA techniques are fundamentally affected by the choice of these ranking and weighting allocations. The project specific risks associated with the selection methodology are discussed in section 3.7.2.

The Maunsell Power Team formed a voting panel to determine element rankings and criteria weightings by consensus. The risks of recommending a sub-optimal outcome using this approach were understood to be:

- Panel members without appropriate qualifications or experience to represent a discipline specific viewpoint

- Tendency for bias to be introduced into the voting process due to a particular viewpoint being more forcefully presented

The voting panel members comprised the six person in-country representatives, as listed in section 1.5, who undertook the field study. Their backgrounds and areas of expertise are outlined below:

- **Michael Breckon:** Technical specialist in power system engineering providing advice to the project team on connection of the power plant to the national electricity grid. Two years of project experience in Afghanistan on transmission grid rehabilitation and capacity building.
- **David Burns**: Technical specialist providing advice to the project team on civil engineering for the power plant and engineering geology of the region.
- **Shanny Campbell:** Social safeguards specialist providing advice to the project team on the social and cultural fabric of the region and how these issues will likely impact on proposed siting of the power plant. Two years of project experience in Afghanistan focussing on social outcomes for capacity building projects and poverty reduction programmes.
- **Warwick Cutfield:** Technical specialist providing advice to the project team on gas fired power generation technology, gas processing technology and gas supply options for the power plant.
- **Alan Sewell:** Environmental specialist providing advice to the project team on the impact of power plant construction and operation on natural and built environments for the candidate sites. Secondary technical specialisation in engineering geology and social issues. Two years of project experience in Afghanistan.
- **Chris Treleaven:** Technical specialist in civil and structural engineering providing advice to the project team on power plant and gas processing plant engineering infrastructure and construction logistics. Secondary technical specialisation in transmission grid construction.

Panel members were briefed to represent viewpoints according to their primary specialisation when voting on proposed selection element rankings. To mitigate against the introduction of bias, voters agreed that the key characteristics of the preferred site were that the power plant could be constructed and operated on a best value for capital investment basis, and be able to produce electricity for the people of Afghanistan in the shortest practicable time frame.

Prior to commencement of voting, panel members were asked if any of the candidate sites were unsuitable in absolute terms according to representative viewpoints. With none of the six sites ruled out, voting on individual sites commenced. For voting on each selection element, individual members of the panel were asked to assign a ranking score to each candidate site from respective viewpoints without disclosure to the other panel members. Assignment of the same 1-4 ranking score to more than one site was allowed if the voter considered there was no appreciable difference between sites for that particular element. Scores were then tabled. Where

different rankings were revealed, voters were asked to justify the reasoning for their score allocation to the rest of the panel. The factors guiding the panel on which ranking allocation to agree on were whether the selection element fell within a single area of specialisation, or more than one area, and how the proposed ranking could be justified in terms of the key characteristics outlined above. For each element, all viewpoints were considered and the ranking score recorded was unanimously agreed.

3.5 Weighting and Score by Site

3.5.1 Selection Element Weighting

Refined site selection elements and categories were individually weighted in a two-stage process. Element weightings were allocated against a five point scale.

- A weighting of 5 indicates that the element is considered to have a fundamental impact on the project feasibility
- A weighting of 4 indicates that the element is considered to have major importance within its category and a significant potential impact on one or more project feasibility considerations such as capital cost, operational cost, plant efficiency, risk, security, social or environmental outcomes
- A weighting of 3 indicates that the element is considered important within its category, with some influence on ensuring a best practice outcome for the project
- A weighting of 2 indicates that the element is considered to be somewhat important within its category, with influence on project feasibility limited to minor risk reduction or efficiency gains
- A weighting of 1 indicates that the element is considered to be of minor importance with respect to its category or project feasibility.

Each selection element is allocated an element weighting. The justification for each element weighting is provided in Appendix D, Table 3. The basis for assigning selection element weightings is the same as described in Section 3.4.4 above.

3.5.2 Calculation of Site Score by Category

Each site achieved a score for every selection category. This was calculated using the following process:

- Multiply site ranking score by element weighting for each selection element within a category
- Determine a category **raw subtotal** by adding the sum of site ranking score by element weighting for each category
- The highest possible raw subtotal that a site can achieve is the sum of element weightings by highest possible score (i.e. 4). This possible score is reported in the raw subtotal row beneath the element weightings for each category
- Since the numbers of selection elements within individual categories differ, it is necessary to normalise the raw subtotals so that the totals for each category are reported relative to the same benchmark, in this case the maximum ranking score of 4. This is achieved by determining a **moderated subtotal** for each selection category. A moderated subtotal is

derived by calculating the ratio of the category subtotal to the highest possible raw subtotal, and multiplying it by 4 to report a category score relative to the highest possible score.

3.5.3 Category Weighting

The scoring process outlined in Section 3.5.2 above, was used to determine a total score for each site. The summation of un-factored category scores would rank sites on the basis that all of the selection categories were equally important. This score was not considered meaningful because it was recognised that certain individual or grouped categories have greater importance depending on which of a range of project outcomes is considered for each of the six feasible sites.

The following range of outcomes was compiled by the field team to form a basis for assigning relative weightings to various selection categories:

- Outcome 1, project cost minimised, considering capital cost alone
- Outcome 2, project cost minimised, considering both capital plus life cycle costs
- Outcome 3, project to be delivered in the shortest possible time frame
- Outcome 4, project to have the least environmental impact and provide the most favourable socio-economic benefits to the local community
- Outcome 5, project to be viewed most favourably from a political and social risk perspective.

For each of the above outcomes, relative weightings were applied to selection categories. The scale for category weighting is open ended. High weightings exceed 1.5, with weightings of 0.5 and zero being considered low. The following reasoning was adopted to assign category weightings, using the same consultation process as adopted for the element ranking:

- Outcome 1. The dollar sensitive selection categories (fuel supply, land availability inclusive of easements, construction related costs, water supply, grid connection, civil facilities and economics) received the highest weightings. Environmental, social, safety, security and risk considerations were given reduced weightings, with the operations and maintenance category being zero rated since this category has no influence on the initial capital cost
- Outcome 2. Similar weightings apply from outcome 1, with increased weighting given to operations and maintenance, risk and economics categories. Construction cost and civil facilities categories received a slightly lower weighting to allow for capital cost becoming a component of total project lifetime costs
- Outcome 3. The time sensitive selection categories (land availability inclusive of easements, fuel supply and grid connection) were given the highest weightings. The dollar sensitive, environmental, social and risk categories were given low or neutral weightings. Operations and maintenance category was zero weighted

- Outcome 4. The highest weightings were applied to the environmental, social, water supply, risk, safety, security and land availability categories and the remaining categories were given low or neutral weightings
- Outcome 5. The highest weightings were applied to the social, safety, security and risk categories, followed by water supply, fuel and construction cost categories. Other categories were neutral or low weighted.

3.6 Analysis and Discussion

3.6.1 Candidate Sites

The Maunsell Power team visited the six candidate sites during the field visit period. The field study also included an appraisal of the existing transportation infrastructure in the region, for the purposes of determining the feasibility of transportation of heavy power station equipment to any of the sites.

Investigation of the gas supply situation, including quantification of reserves and rehabilitation requirements for existing fields, is being undertaken by a different study group.

3.6.2 Non-Site Specific Feasibility Issues

The field team studied the following region wide considerations as they apply to the overall feasibility of the implementation of a gas powered thermal generation facility.

- **Gas Demand.** All existing gas production is consumed by the fertilizer plant at Mazar-e-Sharif or by domestic consumers in Sheberghan and Mazar-e-Sharif. The total daily production is significantly less than that which would be required to generate 100 MW of electricity at the generating facility. Gas extraction rates for the power plant must therefore allow for existing consumption.
- **Water Supply.** Water is a scarce resource in the region, with a heavy demand on existing surface water resources. The most reliable source of process water for gas treatment and power station operation will be from ground water reserves.
- **Transportation Routes.** The most appropriate overland route for heavy transportation enters Afghanistan from Uzbekistan at the Hairatan Bridge. The road from Hairatan to Mazar-e-Sharif is a major regional trade route and in good condition. The runway at Mazar-e-Sharif airport is suitable for heavy lift cargo aircraft carrying up to 115 tonnes payload, however this mode of transportation potentially limits the technology selected for the plant. Bridge strengthening work at up to 4 locations will be required between Mazar-e-Sharif and Sheberghan to allow carriage of heavy equipment loads
- **Grid Integration.** With the candidate sites located in the same geographic region of Northern Afghanistan, the eventual contribution of the station to national electricity

demand and the operating model is not considered significantly sensitive to station location.

3.6.3 Favoured Site Based on Preliminary Assessment

After visiting all of the candidate sites, an informal poll of the field team indicated that Site 1, between the Gerquduq HV Substation and the adjacent gas treatment facility, seemed to stand out from the other candidate sites. The drivers leading to this assessment were:

- The site coincides with a fixed position on the planned 220 kV transmission line and existing gas transmission and collection from three existing fields, implying minimum capital investment in “gas in, power out” infrastructure
- The site is the favoured choice of the representatives of the MEW and MMI, with government ownership confirmed
- Water supply security is high, utilising existing infrastructure currently servicing the gas treatment facility.
- Any new gas or water pipes required can be built up to the site boundary from their respective sources using existing easement agreements
- There are no land use conflict issues at the site
- The land has little economic or environmental opportunity cost
- Potential emissions from the site will have minimal impact on the local community or ecology.

3.6.4 Ranking Study

3.6.4.1 First Order Ranking Study

The field team applied justified rankings to each candidate site for every site selection element compiled during the field study period, using the methodology outlined in Sections 3.4 and 3.5 above. The selection elements that were deemed irrelevant or ranked evenly across all sites were eliminated at this stage. The resulting unweighted matrix (refer Appendix D, Table 4) was reviewed to test the sense of the preliminary assessment, with the following points being noted:

- The Gerquduq site ranked highly across most selection elements
- The sites in the vicinity of Sheberghan generally ranked more highly than the two sites close to Mazar-e-Sharif. The primary reason for this is that it is assumed that the existing gas pipelines between the gas fields and Mazar-e-Sharif will need to be replaced, requiring a significant capital investment in supporting infrastructure which will constitute a sunk cost for the power station development. Provision of this supporting infrastructure increases the risk of construction period over-runs for the Mazar-e-Sharif sites.

Coarse weightings were applied to the ranked scores at category level to provide a first order sensitivity analysis. Several combinations of weightings were trialled and in no case did the Gerquduq site move out of the first ranked position. It was recognised that this methodology did not allow for the relative importance of individual selection elements within selection categories.

In the next stage of analysis, weightings were justified and applied to each selection element. This provided a weighted average category ranking for each site allowing for the relative importance of each selection element within a category.

3.6.4.2 Application of Category Weightings

The final stage of ranking analysis comprised the application of weighting factors to various element weighted categories to rank candidate sites over the range of potential project outcomes described in Section 3.5.3 above. The category weightings were applied (refer Appendix E, Table 5) considering the relative importance of each category in terms of each particular project outcome, as discussed and agreed within the team. This methodology needs to be viewed with caution, because absolute ranking scores are generated for each outcome using weightings which are subjectively assessed on a relative basis. Sensitivity analysis of the ranking is discussed further in Section 3.6.4.4.

3.6.4.3 Site Ranking Results

Using the methodology described in the above sections:

- The Gerquduq site (site 1) was ranked first for each project outcome considered
- The Khoja Gogerdak site (site 2) ranked consistently second.

3.6.4.4 Sensitivity Analysis

Review of the site ranking scores without relative category weighting shows that site 1 achieves the highest or equal highest score in 9 of 12 selection categories. On this basis site 1 is likely to achieve the highest overall ranking by default. The sensitivity analysis undertaken (refer Appendix E, Table 6) examined the three categories for which site 1 did not achieve the highest ranking score, these were category 500 (construction cost), category 900 (safety and security), and category 1000 (operations and maintenance).

- **Construction Cost Category 500.** Site 1 achieved the second highest category 500 score, slightly behind site 5 (the MMI Fertilizer Works). Examination of the site ranking data shows that site 5 achieved a slightly better score in the domestic delivery route selection element. This is attributed to a shorter distance from the anticipated entry point into Afghanistan for station equipment delivery resulting in lower expenditure on road and bridge strengthening works. Other project costs outside the site 5 battery limit, such as gas

supply and grid connection costs, were considered to be much higher than the cost of any necessary delivery route upgrading. The overall ranking of site 1 above site 5 was therefore justifiable on this basis.

- **Safety and Security Category 900.** Site 1 achieved the second highest category 900 score, somewhat behind site 4 (Sheberghan Industrial Park). Examination of the site ranking data showed that site 4 achieved better scores than site 1 for power plant vulnerability, fire brigade response, distance to residential areas and the impact of curfew constraints, but a lower score for pipeline vulnerability. All of the selection element rankings reflect the safety and security advantages of siting the power plant near a population centre. If all other selection categories are considered equally important, category 900 would require a weighting of 42 before site 4 displaced site 1 as the highest ranked site.
- **Operations and Maintenance Category 1000.** Site 1 achieved the third highest category 1000 score, somewhat behind site 4 and slightly behind site 5. Site 4 scored better than site 1 for the staffing and plant accessibility in adverse weather selection elements. This is once again attributed to the benefits of siting the plant near an existing population centre. It is somewhat significant that site 4 outranks site 1 in two selection categories. If all other categories are considered equally important, the category weighting for category 900 and category 1000 needs to exceed 16 before site 4 displaces site 1 as the highest ranking site.

3.7 Recommendation

3.7.1 Recommended Site

The Gerquduq site consistently ranked highest among the six candidate sites throughout the assessment process, and by a significant margin over all sites for each tested project outcome. The Gerquduq site is therefore recommended as the most appropriate location for a gas fired generation facility of up to 100 MW output.

3.7.2 Risks

The field team acknowledges the inherent risk associated with the site selection methodology described above and applied to the pre-screened candidate sites, as it relies significantly on subjective assessment of many elements and in particular the relative weightings of selection categories.

The current development environment in Afghanistan is characterised by a general lack of reliable strategic planning information and incomplete coordination of infrastructure projects at various stages of implementation. Application of professional judgement and assessment based on one time physical observation was therefore unavoidable in this case.

The most significant risks associated with applying subjective assessment methods to selection criteria are that a suitable site is overlooked in the pre-screening study, or a candidate site other than the optimal is recommended.

In this study, the pre-screening is driven by the need to keep the capital out-turn cost to a reasonable minimum and select a site which can be implemented within a short term time frame. Potential sites other than those close to the gas fields, existing pipelines and fixed electrical grid nodes through which the new transmission infrastructure is known to connect with are therefore eliminated from contention.

4 Power Plant Alternatives

This section identifies the preferred technology options for the Sheberghan Gas Fired Thermal Power Facility for both gas conditioning and power generations.

4.1 Background and Constraints

4.1.1 Site Selection

Site selection has been covered in Section 3 . The Site Selection Report ranked a short-listed six sites against twelve assessment categories. The Gerquduq site consistently ranked highest among the six candidate sites throughout the assessment process, and by a significant margin over all sites for each tested project outcome. The Gerquduq site was therefore recommended as the most appropriate location for a gas fired generation facility of up to 100MW output. This Power Plant Alternatives Report is based on a power generation facility at the Gerquduq site.

4.1.1.1 Site Locality

The site is situated within and adjacent to the existing Gerquduq gas processing facility. A sealed road connects the site to Sheberghan City and comprises a 15 minute drive. The site is on the edge of a desert area with minimal observed land utilisation. The power station site is relatively flat but somewhat exposed on a localised topographic high at an elevation of 480m. The area is seismically active being adjacent to the northern edge of the Hindu Kush where orogenic processes are active. The region has a history of strong earthquakes >5.8 on the Richter scale

4.1.1.2 Meteorological

The climate of the Sheberghan region is dry subtropical with wide annual daily temperature variations. Winter (December to February) is mild with mostly cloudy weather and mean monthly minimum and maximum temperatures of -1.5 to 1.5 ºC and 7 to 10ºC respectively. Temperatures can fall briefly to as low as -22 ºC. Precipitation (4-6 days per month) falls mainly as rain and occasional snowfalls are possible. Spring (March and April) is characterised by rapid daytime warming and precipitation occurs as brief downpours. Rainfall is highest during March averaging 56.4mm. Average annual rainfall is 231mm. Summer (May – September) is hot and dry with mean monthly maximum and minimum temperatures of 30 - 39 ºC and 14 - 22 ºC respectively. Daytime maximum temperatures of 45 ºC can occur. Daytime relative humidity during summer does not exceed 25-30%.

Winds are primarily north-westerly and south-easterly. East winds are also common in winter and fall. Prevailing wind speeds are 2-3 m/s. Rare strong winds (up to 20m/s) occur in late spring or summer and are usually accompanied by dust storms, reducing visibility to several metres.

4.1.1.3 Air

There appears to be no air quality data available for the Sheberghan. Ambient air quality at the Gerquduq site is likely to be good based on the following site characteristics:

- the site is in a semi desert area 15km southwest of Sheberghan City (the nearest potential source of air pollution);
- prevailing winds would tend to push any air pollution from Sheberghan city away from the site; and
- the Gerquduq site is relatively exposed to wind and topographically not prone to atmospheric inversion

4.1.1.4 Water

Water is Afghanistan's most precious natural resource and water management systems throughout Afghanistan have been severely damaged during years of internal conflict. Competing water demands include:

- Water supply, drainage and wastewater management in urban areas;
- Rural water supply for domestic purposes;
- Agricultural water use;
- Generation of hydropower;
- Industrial water uses; and
- Water to support natural systems (forests, rangelands and wetlands).

Most Afghans do not have access to safe drinking water. This, in combination with a lack of sanitation and hygiene has serious consequences for the health and well-being of the population. An estimated 99% of developed water resources are used for irrigation. Ground water resources and recharge rates throughout the country are poorly understood which has resulted in a depletion of deep aquifers and pollution of shallow groundwater resources. Demands on surface and groundwater resources are likely to grow substantially due to the large number of returning refugees and internally displaced people.

There is little quantitative information available regarding ground water resources in the Sheberghan apart from water supply data from the Afghan Gas Company's Qarakent pumping station. The Qarakent pumping station is located in the lower Sarepul River valley about 10km south of Sheberghan and originally provided water for both the Gerquduq and Khoja Gogerdak gas treatment plants. The supply also provides water for domestic use to Afghan Gas Company employees. The station is sized to draw approximately 2,000 m^3 per day from 12 wells, though there is no data to indicate if this is a sustainable volume.

4.1.2 Fuel Supply

4.1.2.1 Gas

There are several gas reserves in the Sheberghan region. The drawing in Appendix F shows how these sites are interconnected through the Afghan Gas Company distribution network. Statistics interpreted by the AEAI gas report *Feasibility Study Upstream Gas Supply: Availability, Quality and Required Future Work* 2005 O'Connor, indicate there is more than enough sour gas available from the Gerquduq Jurassic reserves alone to operate a 100MW power station for 44 years. It is proposed that the Gerquduq gas field is rehabilitated in parallel with the implementation of the power station project (and the HV transmission link).

The Gerquduq gas field has the following advantages over the Yatimtaq and Khoja Gogerdak: gas fields:

1. The sour gas reserves are more readily available than those at Yatimtaq and Khoja Gogerdak, and the work program required to bring sour gas on line is less involved. Currently there is limited sour gas production at Gerquduq, and the 10 year sour gas production forecast for Gerquduq is 80% greater than that of Yatimtaq and Khoja Gogerdak combined. Reportedly all 58 wells in the Gerquduq field were drilled to sour gas levels. Although only one well was completed for sour gas supply, it was capable of producing 50% of the power station gas requirement. By comparison, only 6 wells at Khoja Gogerdak were drilled to sour gas levels and none were completed to this level for production. The remaining sour gas reserves at Yatimtaq are very uncertain due to a 3 year long well blow-out.

2. The hydrogen sulphide content of sour gas from the Gerquduq gas field is less than 1.38%, thus allowing flaring of the acid gas produced by the sulphur removal plant whilst still remaining within World Bank emissions guidelines. Sulphur levels at Yatimtaq and Khoja Gogerdak gas fields require sulphur recovery or acid gas re-injection plant, which significantly increases the gas treatment plant cost.

3. The Gerquduq gas field is adjacent to the favoured power station location, and does not require construction of a long distance transmission pipeline for sour gas supply; utilisation of the existing sour gas transmission pipeline which is in poor condition; or location of the gas processing plant away from the power station which then foregoes the possibility of waste heat recovery for use in the gas processing plant.

4. The reported H_2S content of sour gas from Yatimtaq and Khoja Gogerdak fluctuates. The sulphur recovery or re-injection systems necessary for utilisation of the reported 0.13 to 6.75 % H_2S from Yatimtaq and Khoja Gogerdak respectively will be difficult to operate over such a wide range.

In case of short term problems with the Gerquduq sour gas field, the power station can use sweet gas from the same field or from Yatimtaq. In the case of long term problems, sour gas can be back-fed from Yatimtaq and / or the Khoja Gogerdak field via the Khoja Gogerdak sour gas line. The manifolds for both of these fields are right next to each other and are already connected. The condition of this line has not yet been confirmed, but may be in poor condition. The gas treatment plant at Gerquduq will require addition of sulphur recovery or re-injection facilities to remain within World Bank guidelines for sulphur emissions when using Yatimtaq and / or the Khoja Gogerdak gas. If a new sour gas line is required, then it appears less costly to provide full gas treatment facilities at Yatimtaq and / or Khoja Gogerdak, and supply sweet gas to the power station at Gerquduq via the existing sweet gas line.

In all cases it is assumed that gas will be supplied from the Sour Jurassic reserves of these fields. The reasons for this are covered in the gas report. The gas composition for each of the fields is included in Appendix G. All fields have H_2S gas in the Jurassic reserves that will need to be removed as part of the gas conditioning process. Water will also need to be stripped from the gas as part of the gas conditioning process.

As described in the gas report, long term gas planning for the Sheberghan area is dependent on high sulphur gas which requires sulphur removal. Thus the most efficient use of plant is to operate the power generation sulphur removal plant at full output all the time regardless of the power generation gas demand, which depend on the development of the electricity network and staged installation of generation plant. Sweetened gas from the sour gas resource, surplus to power generation requirements, can then be injected into the sweet gas network. This will maximise the use of sour gas, and maximise the life of the naturally sweet gas resource before additional gas sweetening treatment plant is required.

The gas price has been set at $4.50 / GJ, which is consistent with international market rates for dry sweet well-head gas price. This has been interpolated from the International Gas Price graph on the United Nations Conference on Trade and Development (UNCTAD) website http://r0.unctad.org/infocomm/anglais/gas/prices.htm

Transportation and distribution costs are local only for the Gerquduq gas processing plant and power plant concept and are included in the power plant capital cost. The cost of gas includes the amortised cost of the gas processing plant.

4.1.2.2 Fuel Oil

At the time of this report there was no fuel oil being produced in Afghanistan. There are eight oil fields in the Sarepul area, the largest of which is at Kashkari. As there are no producing fields, fuel oil is imported.

Fuel Oil imports to Kabul are currently from Pakistan. The oil is delivered by truck across the Pakistani border and costs 51 c per litre (adjusted fortnightly), plus 2c/l delivery. It is

impractical and too costly to deliver fuel form this source over the Hindu Kush mountain range in the quantities required for a 100MW power station. As such, fuel oil imports to Sheberghan would have to be from Uzbekistan. The cost of fuel will be the same, but with an additional 4c /l delivery.

4.1.3 Electrical Load

As noted in the Site Selection Report, the new power station will export power to Kabul via the northern transmission system. This system is currently in the process of being upgraded under ADB Loan Nº 1977 - *Rehabilitation of the Northern Transmission Link* to provide interconnection of cross-border supplies to Uzbekistan and Turkmenistan. This upgrade is due for completion sometime in 2007, though as for any engineering project, there is always the risk of the project being delayed. Any delay is a project risk that needs to be considered in the evaluation of the maximum single generating unit.

Without this upgrade, the new power station will be limited in generation capacity to the western half of the northern transmission system. Maunsell does not currently have firm figures on the local load in this region, but it is expected to be less than 10MW.

The western half of the northern transmission system is isolated from Mazar-e-Sarif by a damaged 20km section of transmission line. If the damaged line was repaired early as part of the rehabilitation project, then a greater generation capacity will be possible. Again, load figures are not available, but it is expected to be less than 30MW.

4.1.4 Generation Unit Sizes

Optimum Generation unit sizes are driven by a number of factors. The use of larger generators increases the amount of spare or reserve capacity required to continue full service when one or more generators is out for maintenance. The use of large generators also impacts the timing for maintenance outages ie forces maintenance into non peak times ie night time.

The largest single source of existing generation consists of two diesel fuelled generators in Kabul each with an output of 20 MWe.

It is also important for grid stability reasons to maintain frequency to within 5% excursions. On a 50Hz grid with 400MWe connected this would mean that the largest lump of generation that can be tripped off line to stay within this guideline without load shedding would be 20 MWe.

The long term plan is to remain connected to the Uzbekistan and Turkmenistan circuits and double circuit this. The Northern connection would provide additional frequency support however it would not be prudent to rely on this for sizing generator unit sizes within Afghanistan for the medium term.

With the above issues in mind we believe that the maximum recommended unit sizes should be limited to around 20 MWe or the size of the existing open cycle units in Kabul.

4.1.5 Thermal Load

To increase the overall efficiency of the gas use, it is possible to recover waste heat from the power units for use in some form of industry process. The most suitable thermal load at the preferred site is for the amine regeneration at the gas conditioning plant (see section 4.3.4). This thermal load can be provided by either saturated steam at 120 deg C, high pressure hot water at a similar temperature, or direct fired natural gas.

All power plant options are able to provide heat for the amine regeneration from the waste exhaust heat. The best improvements in overall economics are for the open cycle gas turbines and open cycle reciprocating gas engines. Combined cycle plants would need to reduce the electrical generation capacity from the steam cycle to meet the amine heat load.

4.1.6 Power Plant Sizing

Large output power stations generally have economies of scale in terms of overall installed cost per kWe and higher efficiencies. However there are disadvantages such as:

1. Network Stability. Even with the northern transmission link, if a larger (say 50MW unit) trips, there may be problems with network stability.
2. In the event that the link with Uzbekistan is severed, problems with stability will exist with units larger than 20 MWe.
3. Downtime. Maintenance and forced outages on a single large unit will reduce Afghanistan's generating capacity. An outage of a single smaller unit will have less of an impact.
4. Phasing of gas supply. The existing gas fields will be rehabilitated as part of an ADB program, but this is a separate project on an unrelated timeline and there is no guarantee how quickly additional gas will be available.
5. Phasing of energy demand. The first phase of the plant could be installed to meet the energy demand of the Northern region only. Once the Northern link is completed the plant capacity could be increased to match power demand and available gas streams. Turndown of large Gas Turbine output to match local northern region demand is not a practical option as they have higher emissions at loads lower than 80%, and at 50% the heat rate is 25 – 35% higher than at full load, equating to an equivalent drop in efficiency.

Taking the above into consideration, we believe the maximum sized single unit generating plant should be a nominal 20MWe. This is the capacity available from the Kabul liquid fuelled thermal units which are expected to be put into standby mode once the Northern Transmission Link is completed. For completeness, larger plants have also been included in the technology selection financial analysis, Appendix H.

4.1.7 Environmental and Social

4.1.7.1 Emissions

Emissions limits have been adopted from the *World Bank Group Pollution Prevention and Abatement handbook 1998 – Thermal Power: Guidelines for New Plants*. The particular relevant limits are:

Sulphur Dioxide	0.2 tonne per day per MWe
Nitrogen Oxides – Turbines	"Where there are technical difficulties such as scarcity of water … 400 mg/Nm3 dry (at 15% oxygen)"
Nitrogen Oxides – Reciprocating Engine	2,000 mg/Nm3 dry (at 15% oxygen) or 17 g/kWh dry (at 15% oxygen)

Table 4.1: World Bank Emission Limits

Emissions for each technology are discussed later in section 4.2.6 and in the Environmental Impact Statement.

4.1.7.2 Water Supply

Whilst there is a number of local surface water sources that flow significant amounts of water during various times of the year these resources are fully allocated and flow at minimum levels during summer.

Ground water is supplied to the Gerquduq treatment plant via a pumping station at Qarakent. At the time of the site visit, two (2) of the twelve (12) wells and borehole lift pumps were in operation providing water to intermediate storage. Surface mounted transfer pumps then transported the water to Sheberghan City, Khoja Gogerdak and Gerquduq. The existing facility is sized for 900 m^3/d to Gerquduq and 600 m^3/d for Khoja Gogerdak. All of the Mechanical and Electrical equipment at the pump station is at the end of their useful lives and requires re-specifying and or replacing. The pumping station building will need to be refurbished and refurbishment of the existing pipeline by way of "slip-lining" is preferred.

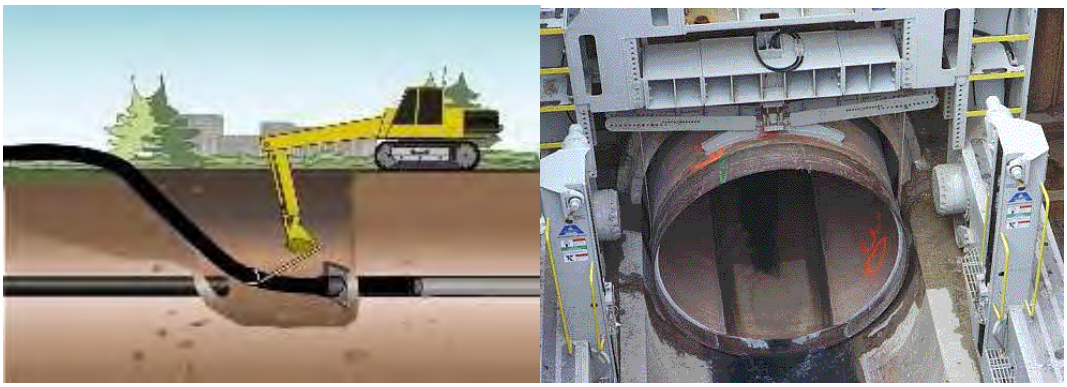

Figure 4.1: Slip Lining Methodology

The cost of water is difficult to define and a hotly debated subject. Often the cost of water is set at the supply cost. Supply cost has been provided for the Gerquduq site at US$ 0.40 / m^3. However, where water is scarce, the opportunity cost of water should also be considered.

The economic or opportunity cost of water reflects its highest achievable value and in theory would be achieved through competitive market pricing. The productivity of water varies much across sectors and the opportunity cost of water is often much higher than the supply cost.

The largest competing market force at Sheberghan is agriculture. Finding a cost of water for agriculture in Afghanistan has been difficult, however a comparable Middle Eastern climate, *The State of Food and Agriculture, FOA 1996* notes that, *"the marginal value of water in the production of different crops in the Jordan Valley ranges from US$0.33 per cubic metre for citrus to a high $1.87 to $2.90 per cubic metre for potatoes, tomatoes and peppers grown under greenhouses"*. For the purposes of this Report, we have set the production and opportunity cost of water at US$2.00 / m^3.

4.1.8 Construction

4.1.8.1 Transportation of Equipment

The Site Selection Report identified limitations for transport to site. It is not possible to transport large equipment over the Hindu Kush mountain range. Alternative delivery routes include by:

1. land via Uzbekistan. The most appropriate overland route for heavy transportation enters Afghanistan from Uzbekistan at the Hairatan Bridge. It has been assumed that transport will be possible from European port into Uzbekistan.
2. land via Iran. This route would track from Turkey through Tehran to the border at Islam Qala, through Heart and up to site. This route has not been explored in detail due to political sensitivities between Iran and the United States.

3. air via an Antonov AN-124 departing Karachi or Eastern Europe. The runway at Mazar-e-Sharif airport is suitable for heavy lift cargo.

There will be minimal restrictions on weight and dimension of the plant via the Uzbekistan route, though a detailed route survey will need to be completed by suppliers as part of the tender process.

For the alternative air-lift option there is a payload restriction of 120 tonne and dimensions of 4.4m H x 6.4m W x 36.5m L. There will also be a significant delivery charge in the order of US$250,000 for the first flight and US$135,000 for every consecutive flight ex Karachi, and $290,000 per flight ex Eastern Europe. This option however offers schedule advantages.

The road from Hairatan to Mazar-e-Sharif is a major regional trade route and in good condition. However, bridge strengthening and maintenance work at up to 4 locations will be required between Mazar-e-Sharif and Sheberghan to allow carriage of heavy equipment loads.

4.1.8.2 Commissioning Date

The time from placement of order to commissioning of the first unit varies from 13-20 months for reciprocating gas engines through to 24-36 months for combined cycle gas turbines. Assuming a fast acceptance of the feasibility Report and tender process, the first units could be commissioned by the end of 2006 which would be a year ahead of the parallel northern transmission link to Kabul. These projects need to be considered in parallel with the power station development.

4.2 Power Plant Technology Selection

4.2.1 Introduction

The suitable proven technologies for power generation of 100MW with natural gas are:

1. Reciprocating Gas Engines
2. Combined Cycle Gas Engines
3. Open Cycle Gas Turbines
4. Combined Cycle Gas Turbines

A discussion of the merits of each technology is included below, then the technologies are compared against each other in a financial evaluation contained in Appendix D.

4.2.2 Reciprocating Gas Engines

Reciprocating Gas Engines are derived from the technology as used in everyday automobiles, so this technology is found in every corner of the world. The gas is combusted in a cylinder, forcing a piston down. This piston is linked to a crankshaft, and in power generation applications the crank shaft drives a generator to produce electricity. There are usually a number of cylinder-

pistons linked to the crankshaft, up to 20 in gas fired engines and usually in a “V” arrangement. Natural gas only fired reciprocating engines are available in two stroke, four stroke rich and four stroke lean configurations. Duel fuelled engines also exist that can run on fuel oil, or gas with a fuel oil pilot.

Two stroke engines complete the power cycle in a single crankshaft revolution. Fuel is injected at the bottom of the piston stroke. As the piston reaches the top of the stroke, the air - fuel mixture is compressed, and a spark ignites the mixture. The force of the combustion drives the cylinder down, then exhaust ports are opened to exhaust the combusted gas. Air - fuel mixture is reintroduced and the cycle starts again. Two stroke technology has been popular in the past for natural gas engine design, but current trends are towards four stroke engines.

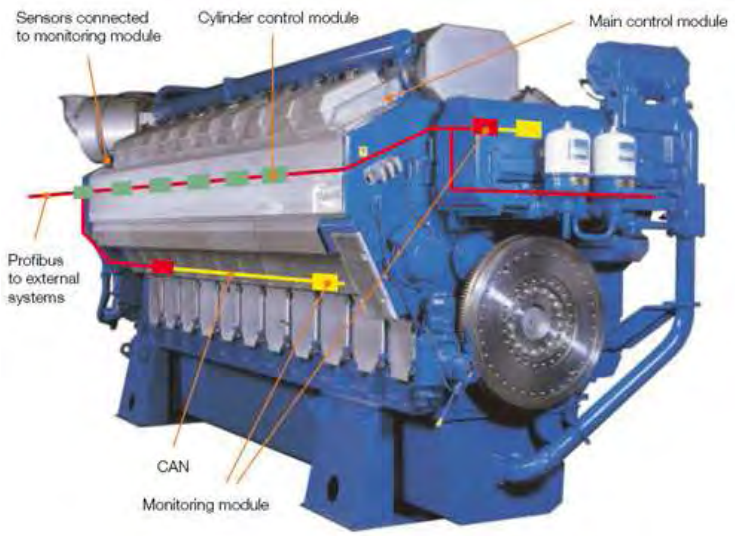

Figure 4.2: Reciprocating Gas Engine

Four stroke engines complete the power cycle in two revolutions of the crank shaft. The first revolution is used for drawing in the air - fuel mixture and compressing it, and the second revolution for combusting and exhausting the combusted gas. Rich-burn engines operate at stoichiometric air to fuel ratio (16:1), meaning a balance amount of fuel and oxygen for the combustion reaction. Lean-burn engines operate with excess levels of air (typically 24:1). The advantage of the lean burn technology is that combustion temperatures are lowered, resulting in lower NOx emissions (refer section 4.2.6).

Turbo-charging is a common feature on either two or four stroke engines. The force of the exhaust gasses is used to drive a small turbine. This in turn drives a small compressor that forces the air - fuel mixture into the cylinder chamber, resulting in more air - fuel per power stroke so a larger power output than normally aspirated engines.

The advantages of the reciprocating gas engine technology used for large base-load power station operation are:

1. High open cycle efficiencies (up to 46.5%)
2. Higher resilience to load fluctuations due to larger rotating mass (than turbines)
3. Tripping of one unit does not have a major effect on the overall output of the station.
4. Negligible water consumption.
5. No de-rating of output due to elevation until 1,000m amsl
6. No de-rating of output due to temperature until 35 deg C
7. No requirement for gas compression for delivery pressures above 4 bar g
8. A good understanding of the technology around the world.
9. Major maintenance outages are shorter in duration
10. Cost effective water based combined heat and power opportunities

Disadvantages include:

1. Unit size is limited to 6-9MWe for 100% Natural gas only fired engines
2. Heavier and larger units for the same generation capacity.
3. Slightly higher operation and maintenance costs
4. Low tolerance for H_2S (up to 0.5% = 500ppm)
5. The potential for efficiency improvements due to combined cycle are relatively small due to the lower exhaust temperatures.

Large gas reciprocating engines are available in unit sizes up to 9.0MWe for single fuel firing. For a 100MW station, a series of 11 units would be phased into commission. There are several sites around the world with up to 120MW of gas engine generation (e.g. 110MW Khulna, Bangladesh; 111MW Plains End, USA; 116MW Barrick Goldstrike, Nevada USA). A large number of small units also allows for better phasing of generation capacity considering the unknowns at the Sheberghan site in terms of electrical load and gas availability.

There are larger gas reciprocating engines available. However, these engines require a pilot fuel to assist with the combustion. The pilot fuel requirement is 1 – 3 % of total fuel requirement, and it is feasible to import this quantity of fuel oil to site. This option has been included in the cost spreadsheet, however is not as attractive as the single fuelled gas only engines. In addition, the largest component weighs in the order of 280 tonne, which presents huge logistical problems for delivery to site. The largest component on a single fuelled gas engine is in the order of 115 tonne, which is feasible to deliver on most roads and can also be airlifted.

Manufacturers of large reciprocating engines are fewer than for turbines, but there are still enough to promote good competition. Wartsila and Rolls Royce are the only large companies that makes units in the 9 MWe range, though Caterpillar and Mitsubishi make engines in the 6 – 7 MWe range. Note that at this time, Rolls Royce has a policy that does not allow it’s employees to travel to Afghanistan.

4.2.3 Open Cycle Gas Turbine

Open Cycle Gas Turbines (OCGT) operate with a rotational rather than reciprocating action. The Gerquduq treatment plant has had a number of 2MWe open cycle aero-derivative gas turbine generation units running up until 4 years ago. As such, there is an existing understanding of small scale turbines. The maintenance and operation of these units has recently stopped due to a lack of parts. These units were primitive in their design and operated at very low electrical efficiencies. Afghan Gas reported this to be as low as 1 m^3/kWe which equates to about 10.5% efficiency.

The major components are the compressor, combustor, and turbine. In power applications, a further power turbine is sometimes added. A simple process flow is shown in the figure below. Ambient air is compressed in the compressor section by 20 – 30 times. The air is then directed into a combustion section where fuel is added then ignited. The expanded combustion gases are then directed through a turbine (compressor turbine) which in turn drives the compressor. In power applications, the drive shaft may be also connected to a generator for electricity production. Otherwise, the gases are passed from the compressor turbine through to a second *power turbine*, which is connected to the generator.

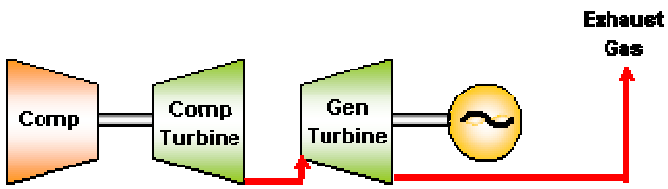

Figure 4.3: Open Cycle Gas Turbine Schematic

Combustors are in the form of annular, can-annular or silo. Annular combustors are based on aircraft engine technology (Aero-derivative type) and are shaped like a large hoop surrounding the middle of the engine. Can-annular combustors are similar, but have a number of “cans” surrounding the middle of the engine. Silo (frame) technology (Industrial type) consists of one or more combustors that are off-set from the engine, and are usually used for large scale applications.

As for reciprocating engines, combustion can be either at near stoichiometric conditions, or lean (excess air). In the first (diffusion flame combustion), the air - fuel mixing, ignition and combustion take place in the same combustion chamber. Temperatures, and hence formation of NOx, are high. In the lean burn case, the air - fuel is premixed in a first stage, and then delivered to a second stage for ignition and combustion. The excess air results in lower combustion temperatures, so less formation of NOx. This process is common with modern turbines and is referred to as Dry Low NOx (refer section 4.2.6).

On diffusion combustion, NOx has traditionally been reduced by injecting water or steam into the combustion process. This lowers the peak and average combustion temperatures, therefore lowering thermal NOx formation. At the Gerquduq site with limited water, this would be an expensive exercise.

During high ambient temperature the engine output drops off. Historically, one method to overcome this was introducing water at the air intake by fogging. The lower air temperature and the additional water both increase the mass flow through the turbine, improving power output. However, manufacturers such as GE no longer approve this method as they found it damaged the engine turbine blades. Other methods of reducing air temperature include refrigerant based air chillers. These have a capital and operational cost, and are usually only considered where the cost of fuel is high.

Power output can be improved by injecting steam or water during the compression stages to cool the compressed gases therefore reducing the compressor load. This practice is usually only undertaken on the high performance aero-derivative turbines and not on the industrial turbines. There is also a water and capital cost penalty.

A regenerative cycle can also be added to an OCGT. The exhaust gases are used to preheat the combustion air, reducing the amount of fuel required to reach combustion temperatures. However, the efficiency gain is not usually sufficient to justify the capital cost unless the delivered cost of fuel is high. Cost of fuel for this Sheberghan project has been set at international market well-head rates, so a regenerative cycle is not considered viable.

Turbines are sometimes referred to as aero-derivative and industrial. Although many industrial turbines are derived from the aeroplane jet turbines, there are a number of differences in the two classes. Aero derivative turbines are more efficient, higher tolerance, lighter weight, more maintenance intensive and expensive than the industrial turbines. The industrial turbines are built for industrial applications, so are more robust, less sensitive to fuel variations, and do not de-rate as fast at high ambient temperature. As such, aero derivative turbines would be considered for locations with ready access to state of the art maintenance facilities and quick supply of spare parts. Considering the rough, hot and remote environment that the site is in, and potentially variable fuel quality, only industrial turbines have been considered in the analysis.

The advantages of the Open Cycle Gas Turbine (OCGT) are:

1. negligible water consumption (if no power augmentation),
2. lowest operation and maintenance cost of all the technologies considered,
3. low installation cost, especially good if efficiency is not a consideration (i.e. low fuel costs)
4. highest availability, and
5. ability to handle larger quantities of H_2S (up to 4%) as exhaust temperatures are sufficiently high so as sulphur containing compounds do not condense

The disadvantages are that it:

1. has the lowest open cycle efficiency, in the order of 30 to 35% for a 25MWe plant
2. has a de-rating due to altitude (pressure) and temperature above ISO conditions (15 deg C, 0.0 m average mean sea level, 101.325 kPa)
3. requires water if efficiency is to be improved by fogging or steam injection.
4. requires water if water / steam NOx control is required

4.2.4 Combined Cycle Gas Turbine / Reciprocating Gas Engine

Adding heat recovery and a Rankin steam cycle is an effective way to improve the overall efficiency of a reciprocating gas engine or gas turbine. A simple process flow is shown in the figure below. Hot exhaust gasses from the gas turbine / engine are passed through a boiler (Heat Recovery Steam Generator – HRSG) to raise steam. The steam is then passed through a steam turbine which drives a generator to produce electricity. The steam is then condensed to vacuum conditions using a condenser to increase the steam turbine efficiency. This pressure drop across the turbine is what drives the generator. More power can be gained from a greater the pressure drop.

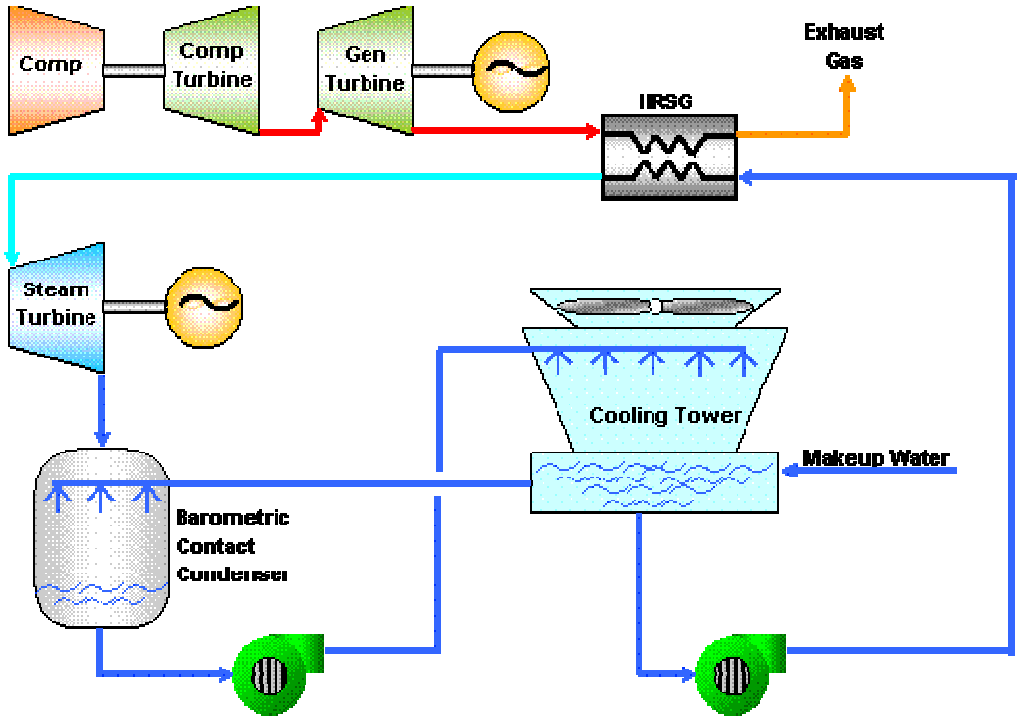

Figure 4.4: Combined Cycle Gas Turbine Schematic

The steam turbine technology has been around for over 100 years. Manufacturers provide steam turbines in standard sizes and for CCGT usually package one steam turbine for one or two gas turbines. Combined cycle reciprocating engine power stations have in the past been limited to locations where fuel prices are very high and there is no access to natural gas (i.e. Heavy Fuel Oil or diesel powered). Examples include: (38MW Vaasa / Wasa Finland; 100 Brahmapuram, India; 106 MW Pochampalli, India).

The options for condensing and cooling include:

- Open Cycle cooling using a once through pass of water. This is typical at locations with large water bodies such as the sea, lagoon, or major river, so is not an option for Gerquduq.
- Re-circulated wet systems using an evaporative cooling tower. The consumption of water through an evaporative cooling tower is 2 – 3 % of that used for a once through system, but still significant at approx 2.5 kg/kWh (taking into account evaporation, blow-down and drift losses). Evaporative cooling towers performance is limited by the approach to wet bulb temperature, so is well suited to hot, dry conditions. As wet bulb temperature is always lower than dry bulb temperature (except at 100% humidity), this technology will always give higher annual plant output and more efficient plant performance.
- Direct air cooling using an air cooled condenser. Dry cooling is used where there is a shortage of water however is rarely used for combined cycle power stations. Power requirements are four to six times that of a wet system, and capital costs for the cooling system are normally more expensive than evaporative cooling for the same ambinets and heat loads. Dry cooling performance is limited by the approach to dry bulb temperature, so is suited to cool, wet conditions. The hot, dry conditions experienced at the Gerquduq site during Summer means that to maintain nameplate output the condensers would have to be oversized by the appropriate derating factor. With an average ambient of 35 deg C in the summer this will result in the condensers requiring up to 100% extra cooling area and hence double the capital cost. , This option is discounted from further discussion.
- Direct air cooling using barometric contact condenser. As for the wet systems, a barometric contact condenser is used in conjunction with mechanical draft radiators. The development of this technology was carried out in Hungary and there are some installations throughout the former USSR, though they are not common. Again, considering the hot, dry conditions at site, this option is not considered further.

Taking the above into consideration, Evaporative Cooling Towers are the only sensible technology for cooling steam turbine condensers. This for either gas turbine or reciprocating engine combined cycle technologies.

Supplementary firing of gas in the HRSG can be used to generate additional power, though the overall system efficiency decreases. This would only be considered for peak load operation, and not for base load application so this is discounted from further discussion

The advantages of a Combined Cycle Gas Turbine (CCGT) over an OCGT are that it has higher efficiencies, in the order of 40 to 45% for a nominal 25MW plant and up to 50% for 50MW plants and up.

One big disadvantage is the additional capital cost. Whenever considering combined cycle, the additional capital cost of the equipment needs to be offset by efficiency gains. This is easier to justify when fuel costs are high, but more difficult if fuel costs are low.

The other big disadvantage is that combined cycle installations require significant make-up water for the steam cycle evaporative cooling towers. For a 100MW CCGT station, this will be in the order of 700,000m^3/y, or close to 2,000m^3/d.

Whilst there are several reports that discuss the Afghanistan water supply in general, there is no solid data available to confirm if the Qarakent reserves can produce this much water year-round and throughout drought periods, at a sustainable rate. As such, there is inherent project risk involved with a large combined cycle option that needs to be considered seriously.

4.2.5 Combined Heat and Power

There are no existing heat loads at the Gerquduq sitesuch as there are at the fertiliser factory. There are heat loads for the gas conditioning equipment which will be met by the open cycle gas reciprocating engine technology without affecting Heat rate for the overall plant. The heat for the Amine reboiler will come from the engine exhausts. This cogeneration of heat would save a significant amount of gas and equate to around 4% efficiency improvement overall. Extraction of steam from the combined cycle options would result in a reduction in generation output.

Future possibilities exist for recovering waste heat from the gas engines probably the best of which is the use in greenhouses and also for coolstores for chilled water.

The energy can be transferred from the power station to the gas treatment plant by steam, hot oil, or hot water.

1. Steam systems have the advantages of high energy transfer and high temperatures. However, there are inherent problems with water quality, safety and maintenance. Steam also required constant blow-down, (release of water) to maintain water quality, which in turn means a constant topping up of the water supply.
2. Hot oil is an alternative to steam and is able to provide high heat transfer at high temperature. There are safety and maintenance issues with hot oil, and it can get quite messy. The oil is an expense, but there is not the requirement for blow-down as for steam.
3. Hot water systems are able to provide low quality heat without problems found in steam and hot oil systems. However, due to the low grade heat, bigger heat exchangers are required to provide the energy transfer. The hot water system is pressurised by either air or nitrogen over water. Pressures of 3 bar g will give temperatures of 140 deg C.

At this stage, the heat load at the amine process is expected to be approximately 11MW at 120 deg C. This is best provided by a hot water system. However, suppliers of the gas conditioning plant may require different load and temperatures, so this decision is best left until the tendering process.

4.2.6 Emissions

Emission limits have been adopted from World Bank guidelines. The main emissions of natural fired gas turbine and reciprocating engines are presented in the sub-sections below and summarised at the end of this section. These are for natural gas only, as combustion of fuel oil adds further possible emissions.

The type of reciprocating engine considered is the lean-burn four stroke engines. Discussion for open cycle gas turbines is also applicable to combined cycle gas turbines.

Carbon Dioxide
CO_2 is the by-product of all fossil fuel fired power stations. CO_2 is present in high concentrations in the Gerquduq Jurassic fuel (reported at 8.79%), and is also a by product of the combustion process. The most effective way to reduce the amount of CO_2 per unit of energy electricity produced (MWh) is to use engines with higher efficiencies. Other ways to improve the overall thermal efficiency, especially for open cycle gas turbines, is to utilise the waste heat from the exhaust for a combined cycle or combined heat and power application as discussed in section 4.2.4.
CO_2 can also be used in the greenhouse option to speed the growth.

Note that carbon tax has not been considered in the evaluation of technologies.

Carbon Monoxide and Volatile Organic Compounds
CO and VOC are both formed from incomplete combustion. CO occurs when there is insufficient time for CO to oxidise to CO_2. Reciprocating engines produce more CO and VOC than turbines.

A gas turbine operating load has a considerable effect on the emissions produced. Lowering the load to less than 80% of the rated load will reduce the combustor zone flame temperature, increasing CO and VOC. This should be a big consideration when sizing the units.

In reciprocating engines, low cylinder temperature causes early quenching of combustion gases resulting in higher CO and VOC. Lean burn reciprocating engines may also cause an increase in CO. Catalytic oxidation has been shown to be effective in reducing CO emissions in lean burn reciprocating engines. However, considering the good air-shed at the Gerquduq site, the fact that the CO produced in these lean burn engines still meets stringent German TA-Luft emissions

limits, and the additional cost and complication associated with this mitigation technique, it has not been considered as a requirement for this project.

Nitrogen Oxides

Nitrogen Oxides (NOx) are significant emissions in both turbines and reciprocating gas engines, but lower in turbines. The bulk of NOx formation is from thermal disassociation and subsequent reaction of N_2 and O_2 in high temperature flame pockets (thermal NOx). Negligible formation also occurs from early reaction of nitrogen in the combustion air with hydrocarbon radicals from the fuel (prompt NOx), and from nitrogen bound in the fuel with oxygen.

NOx decreases exponentially with decreasing combustion temperature and linearly with combustion time. An effective way to reduce NOx in gas turbines, particularly in the older diffusion flame combustors, is to lower the combustion zone temperature by introducing water or steam. Injection is at a water-to-fuel ratio of less than 1. This can reduce NOx by up to 60%, but also reduce efficiency between 2 – 3%. Power output increases by 5 – 6% due to the increased mass flow required to maintain turbine inlet temperatures.

Modern gas turbines use dry methods to lower NOx. Typically a pre-mixed lean air / fuel mixture is used to decrease average and peak flame temperatures. In some cases a second combustion stage is added to allow an extremely lean mixture. To allow good pre-mixing, the fuel channels tend to be narrower, so are more susceptible to clogging due to solids in the fuel. At Sheberghan, if the correct maintenance is not performed on the fuel conditioning system, this will cause problems with fuel blockages.

The most proven control techniques for lean-burn reciprocating engines is Selective Catalytic Reduction (SCR), involving an ammonia storage, feed, injection system, a noble metal catalyst and catalyst housing. SCR is most effective on lean burn engines operating at constant loads. An SRC has not been considered for the Sheberghan site as the lean burn engines will be under the World Bank limits without this additional capital cost.

Sulphur Oxides

The most common form of Sulphur Oxide (SOx) in a natural gas fired turbine or reciprocating engine is SO_2. Other oxides of sulphur are only a primary pollutant when burning liquid fuels.

As most of the H_2S will be removed from the fuel stream prior to combustions, SOx will not be a major pollutant from the engines. However, SOx will need to be considered in the gas conditioning process. As discussed later, the sulphur removed from the gas stream can be incinerated at low cost (but high SOx output), recovered as elemental sulphur at a cost, or reinjected into a depleted gas well at a cost. World Bank emissions guidelines allow 0.2 tonne of SOx per day per MWe of generation plant. On a 100MWe power station, this equates to 20 tonne per day of SOx.

Particulate Matter
Like SOx, particulate matter is only a primary pollutant when burning liquid fuels. Reciprocating engines do produce minimal amounts of particulate matter from volatized lubricating oil, particularly as the engine wears.

Summary of Gaseous Emissions
A comparison between generic reciprocating gas engine and turbine technologies is presented in table 4.2 below.

	Turbine			Reciprocating Engine – Four Stroke Lean Burn	
	OCGT & CCGT	OCGT	CCGT		
Unit	lb/MMBtu fuel input	kg/d (100MWe)	kg/d (100MWe)	lb/MMBtu fuel input	kg/d (100MWe)
Carbon Dioxide	110	1,167,424	817,197	110	878,706
Carbon Monoxide	0.082 (uncontrolled) 0.030 (water injection) 0.015 (dry NOx control)	870 318 159	609 223 111	0.317 (90-105% load) 0.557 (<90% load)	2,532 4,449
Nitrogen Oxides	0.32 (uncontrolled) 0.13 (water injection) 0.099 (dry NOx control)	3,396 1,380 1,051	2,377 966 735	4.08 (90-105% load) 0.847 (<90% load)	32,592 6,766
Particulate Matter	0.0066	70	49	0.0101	81

Source: US EPA AP42 Compilation of Air Pollutant Emission Factors Chapter 3.1-3.2
Table 4.2: Generic Emissions for OCGT, CCGT and Gas Engine Technologies

Note thermal efficiency through high efficiency combustion (reciprocating engines) or utilisation of waste heat (combined cycle) decreases the pollutants per unit of electrical energy (MWh) produced. This has the largest impact on CO_2 emissions as illustrated in the table above.

Figures for pound per million BTU were sourced from *US EPA AP42 Compilation of Air Pollutant Emission Factors Chapter 3.1-3.2*. Figures for kilograms per day were calculated for typical efficiencies of 35% OCGT, 50% CCGT and 46.5% reciprocating gas engine.

Non-gaseous Emissions
Other emissions from the power station include:

- Water – There may be water dumped during maintenance on the gas reciprocating engines, though this water can also be stored for re-use. Any water dumped shall be put into a drying basin. The dry climate as site will allow the water to evaporate. Combined cycle units will

also discharge water through the evaporation and a small amount from blow-down. Again, blow-down will be disposed of in a drying basin.

- Oil – the reciprocating engines will go through large quantities of lubrication oil. For a 100MW plant, this is likely to be approximately 280 tonne / year. The waste oil can be free-issued or sold at a minimal cost to the local community to either fire the local brick kilns or as heating oil. Turbines will go through smaller quantities of oil but the disposal method will be the same.
- Sulphur – If the optional Klaus Sulphur removal plant is installed in the future the sulphur recovered from the acid gas stream will be in the form of elemental sulphur which has value as a fertiliser. There will be similar quantities produced for both reciprocating engines and turbine technologies. This is discussed further in section 4.3.4 below.

4.2.7 Preliminary Financial Analysis

Several configurations for each technology have been considered in the technology selection financial analysis contained in Appendix H. Models have been selected from reputed suppliers with proven experience in this range of equipment. The capital cost, operation and maintenance have been taken into consideration and expressed as US c/kWh. The result is a delivered cost of power for each option. This cost of power is only for comparison purposes and not for overall power station costs.

A discussion of the line items used in the evaluation is presented in the table 4.3 below.

Site Elevation	Based on the actual elevation at the Gerquduq site of 480m. This has an impact on the output of the turbine technology, but not the reciprocating technology
Design Temperatures & Humidity	Taken from various reports on the temperature ranges at site. This needs to be backed up by recent observations prior to finalisation of a technical specification.
Economic life and discount rate	These values used to determine the annuity factor, which brings the capital cost back to a present dollar yearly value. This is a simplified economic analysis, but suitable when comparing a large number of options. For economic analysis on a power station of this type, 20 years is a standard industry value. Discount rate taken as the loan rate from AEAI.
Fuel Cost	This has been taken as the international cost of gas at the wellhead rather than the actual production cost. This presents a more accurate comparison of low efficiency verses high efficiency units.
Gas calorific value and composition	Taken from the summarised data in *Sheberghan Feasibility Study Upstream Gas Supply:* *Availability, Quality and Required Future Work*, O'Conner 2005. Recommended Technologies can handle a wide range of CV's however additional costs will be incurred if significant changes result during commissioning.
De-rating	Taken from supplier graphs. Temperature de-rating has been weighted against

	monthly temperature ranges provided by the *Hong Kong Observatory Climatological Information for Sheberghan, Afghanistan. (http://www.hko.gov.hk/wxinfo/climat/world/eng/asia/westasia/sheberghan_e.htm)*
Efficiency	Efficiency across engine, gearboxes, alternator and transformer. From supplier information for specific units.
Performance Degradation	De-rating of units (turbines) due to wear, build-up and erosion. De-rating rectified at each major overhaul.
Parasitic Load	Taken for whole power station, but not including gas conditioning plant which is considered equal for all options. Note combined heat and power option for open cycle reciprocating engines with Amine tower will reduce gas parasitic load
Gas compressor power consumption and cost	Current gas gathering manifold pressure is at 9-12 bar g depending on field. Turbines require 25 – 35 bar g. Reciprocating gas engines require greater than 4 bar g. Power consumption based on generic compressors.
Unit availability	Percentage each year when unit is available to generate. Takes into consideration forced outages and planned maintenance downtime. Figures taken from the *North American Electric Reliability Council Generating Availability Data System* for the years 1999 – 2003. Reciprocating Gas Engine availability equated with Diesel Reciprocating Engine availability.
Total Delivery	Time from order to commissioning taking into consideration manufacture, transport to site installation and commissioning.
Installed cost	From suppliers, budget pricing for turn-key installation in Afghanistan. This does not include delivery costs which are considered equal for all options.
Gas consumption	Based on reported calorific values in *Sheberghan Feasibility Study Upstream Gas Supply:* *Availability, Quality and Required Future Work*, O'Conner 2005, and overall unit efficiencies provided by suppliers. As calorific value is taken as the same for all units, it does not have an effect on unit selection, but the lower bounds will need to be agreed prior to preparing tender documents for the gas processing plant.
Water consumption and cost	Estimated water consumption. Assumes dry or nil NOx control and no power augmentation. Combined cycle water consumption from evaporative cooling towers based on typical industry values of approximately 2.5 kg of water for each kWh of power generated.
Non-fuel O&M	Covers spares, consumables and operation. Based on 5 year maintenance contract from suppliers, then hand-over to MEW. Figures taken at industry standard for these types of units. refer Department of energy guideline http://www.eere.energy.gov/de/equipment_costs.html#operate
Compressor O&M	Based on gas turbine driven compressors
Project Management	Covers Owners Engineer role including site supervision through to commissioning

Owners Costs	Covers Owners Costs and MEW costs from tendering through to commissioning
Spares	Initial spare parts inventory
Construction Interest	Recognises the cost of capital tied up during construction. Based on interest rates over the average capital tied up during construction.
Contingency	Allowance for unforeseen events.
Annualised Capital Cost	Capital cost of the equipment brought back to a yearly bases and present day dollars via discounted cash flow techniques.
Effective Power Cost	Cost of generating power, prior to any profit on sales, taxes, etc.
Currency Conversion	The suppliers regional sales offices covering Afghanistan are mostly based in Europe. Pricing in Euro has been converted to US$ at the 2004 average conversion rate.

Table 4.3: Preliminary Financial Analysis Criteria

Result

The lowest cost of delivered electricity from the attached spreadsheet is for the reciprocating engine options refer Appendix H.

The hierarchy of results showing the % of total unit cost of generation is shown in table 4.4 below.

Technology	Fuel %	Non-Fuel O&M %	Capital Cost %	US c/kWe
Reciprocating Gas Engines	61	16	23	6.73
Duel Fuel Gas Engine	57	16	27	7.20
Large Combined Cycle Gas Turbine	55	15	30	7.29
Large Open Cycle Gas Turbine >20 MWe	82	11	29	7.65
Small Open cycle gas turbine <20 MWe	69	8	23	8.10
Small Combined Cycle Gas Turbine	54	12	34	8.52

Table 4.4: Comparative Generation Costs

The large Combined Cycle Power station options are slightly more expensive and become more so if we use the marginal cost of water as \$2.00 /m^3. A number of sources have provided water cost as simply the delivered cost considering capital, operation and maintenance. The value provided for this is US \$0.40 / m^3. At this price, combined cycle gas turbines have a comparable delivered cost of power to reciprocating gas engines excluding any combined heat and power opportunities. It is noted that the world trend is towards large high efficiency leading edge

technology combined cycle plants based on gas turbines, however this is mainly in areas with surplus unallocated water supplies or adjacent to oceans so that seawater can be used for condenser cooling. They also suit larger networks, where there are spinning reserves and similar sized generation blocks. As the advantage in this case is marginal, and considering the possible opportunity cost of water, risk of continuous supply in drought years, and social impact of using this water, the reciprocating gas engines have the advantage over the combined cycle technologies.

The unit price for electricity generated from the combined cycle units less than 25 MWe size is significantly more expensive than both the reciprocating engines and the larger combined cycle gas turbine driven plant. This is predominantly due to economies of scale and their comparative drop off in efficiency.

Fuel costs have been initially set at international market rates of US$4.5 / GJ. At this rate, the open cycle technology is not viable due to the low efficiencies. However, at US $2.0 / GJ the open cycle starts to compete with both the reciprocating gas engines and combine cycle gas turbines. However, it is felt that international market rates at the wellhead are the correct value to place on the gas, and this value also provides for a more efficient and responsible use of the Afghanistan gas reserves.

When the international market rate for gas and a responsible allocation of water is considered, the open cycle reciprocating gas engine is the preferred technology. It is therefore recommended that this technology be specified for installation at the Gerquduq site.

4.3 Gas Conditioning

4.3.1 Introduction

Natural gas, as required by power station mechanical drives, is very different from the natural gas that is brought from underground up to the wellhead. Raw natural gas from gas wells is termed “non-associated gas”. Natural gas commonly exists in mixtures with other hydrocarbons (Natural Gas Liquids or NGLs); principally ethane, propane, butane, and pentanes. In addition, raw natural gas contains water vapour, hydrogen sulphide (H_2S), carbon dioxide, helium, nitrogen, and other compounds. There is some data available on the likely natural gas composition available for the power station, and this is presented in Appendix G. Further sampling is recommended to refine this data. Regardless, conditioning of the natural gas will be necessary before its use in the power station.

The actual practice of processing natural gas to pipeline dry gas quality levels can be quite complex, but usually involves four main processes to remove the various impurities:

1. Oil and condensate removal
2. Separation of Natural Gas Liquids
3. H_2S Removal

4. H_2O Removal

In addition, the raw natural gas may have high temperatures and pressures. The conditioning process usually lowers the temperatures, but pressure reduction or compression may be required depending on the power conversion technology. In our case as we have chosen the reciprocating engine technology the requirement for the fuel specification is well defined

4.3.2 Oil and Condensate Removal

The most accepted technology for oil and condensate removal is a simple knock-out vessel (or two-phase separator). The expansion of the gas into a larger vessel causes the condensate to drop out of the gas. Gravity then separates the liquid and gas streams. This method is already in use at the Gerquduq gas conditioning plant and is considered appropriate for the new gas conditioning plant.

4.3.3 Separation of Natural Gas Liquids

Natural gas coming directly from a well may contain natural gas liquids (NGLs) that in most instances have a higher value as separate products, making it is economical to remove them from the gas stream. NGL's also have a much higher calorific value per unit volume than as a gas. This can create a safety and operational problem, especially during equipment start-ups when cold. NGL's under certain scenarios can also cause degradation of the hot gas path components in a turbine.

There are two basic steps to the treatment of natural gas liquids in the natural gas stream. First, the liquids can be extracted from the natural gas. Second, these natural gas liquids must be separated themselves, down to their base components. This could be done by Refrigerated Lean Oil absorption.

At Sheberghan the gas analysis indicates that the volume of NGLs in the gas stream is small. The Gerquduq analysis shows 1.1% Ethane, 0.14% Propane, and negligible hydrocarbons heavier than this. As there is no sophisticated infrastructure for extraction and storage of these NGL's it would appear that it would not be economic to plan for their extraction at this stage. There does not appear to be NGL separation at the existing Gerquduq or Khoja Gogerdak sites. Once the power plant is installed and operational, further gas sampling and testing can be completed and an evaluation of the value of NGLs, can be made. The plant layout should consider the potential future allowance for targeted NGL extraction, but no allowance has been made in the preliminary engineering.

4.3.4 Sulphur (H_2S) Removal

One of the most important parts of gas processing involves the removal of sulphur. Natural gas from some wells contains significant amounts of sulphur in the form of hydrogen sulphide (H_2S). This natural gas, because of the rotten smell provided by its sulphur content, is commonly called 'sour gas'. Sour gas is undesirable because the sulphur compounds it contains can be extremely harmful and even lethal to breathe. Sour gas can also be extremely corrosive.

The gas is usually considered sour if the hydrogen sulphide content exceeds 5.7 milligrams of H_2S per cubic meter of natural gas. The process for removing hydrogen sulphide from sour gas is commonly referred to as 'sweetening' the gas.

The Gerquduq gas will be sourced from the Jurassic layers. Available data indicates this will be a sour gas of 0.18 to 0.71% H_2S and high CO_2content of (8.76%). The available data also indicates that reserve gas supplies from Yatimtaq and Khoja Gogerdak Jurassic layers will have H_2S levels of up to 3.31% and 6.75% respectively. Whilst the open cycle gas turbine technology can operate with up to 4% H_2S, this is not ideal and not acceptable for combined cycle gas turbine operation due to the sulphur containing compounds condensing in the heat recovery sections. In addition, World Bank guidelines limit the SO_2 emissions to 0.2 tonnes per day per MWe. This equates to a gas stream of less than 1.38% H_2S. Reciprocating gas engine technology requires H_2S levels below 0.5% and ideally below 0.05%.

To ensure the power station operates well below World Bank limits, the plant shall only be designed to process gas up to 1.25% H_2S. Any gas received above this will need to be processed by a different gas conditioning system, with sulphur recovery or acid gas reinjection. It is intended that the sweetening plant be run at full capacity, so during times of low power station gas usage such as the initial phasing of the project or maintenance times, the additional capacity of the gas sweetening plant can be used to provide sweet gas to the local community gas users and the fertiliser works. Local community users are currently supplied with wet, sour gas and consequently suffer supply interruptions in winter, pipe and appliance degradation, health and safety risks.

Suitable technologies for the gas flow rate required for a 100MW power station and <1.25% H_2S content include:

1. Amine Scrubbing (with sulphur recovery)
2. Biological, and
3. Iron Redox

There are depletive technologies such as iron sponge that would be suitable at the lower H_2S levels, however at high H_2S content, the filtration medium would need to be continually replaced and would not be economic. Another alternative is the molecular sieve which would be able to handle the lower 0.18% H_2S gas, but not the higher sulphur concentrations that may be experienced at the Gerquduq field or the alternative gas sources.

4.3.4.1 Amine Scrubbing

The primary process for sweetening sour natural gas is called the Amine Process and utilises amine solutions to remove the hydrogen sulphide. The US Natural Gas Supply Association (www.naturalgas.org) reports that the amine process is used in 95 percent of U.S. gas sweetening operations. The main advantages of the process is that it is robust, proven technology able to function over a wide range of operating conditions (flow rate, H_2S loads etc). There are also existing amine towers at Sheberghan, so the local technicians have a good understanding of the technology. A simple process flow for the amine process is shown in Figure 4.5 below:

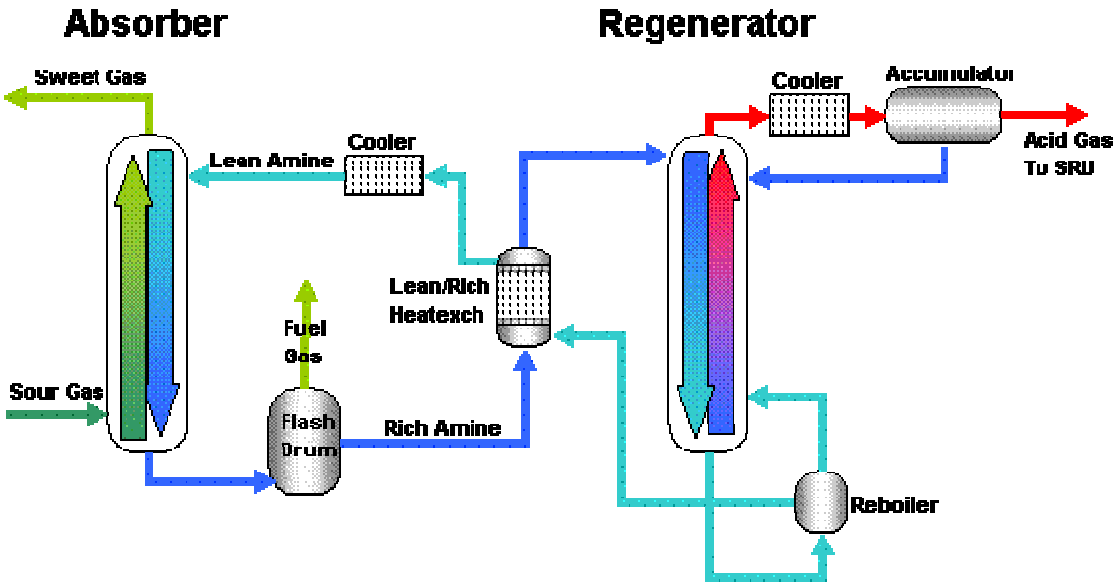

Figure 4.5: Amine Scrubbing Process Flow Diagram

The sour gas is passed through a *contact tower*, which contains the amine solution. This solution has an affinity for H_2S and CO_2, and on contact with the molecules in the sour gas stream, absorbs them. The most common amine solutions used are monoethanolamine (MEA) , diethanolamine (DEA) and Methyldiethanolamine (MDEA). These amine solutions absorb H_2S and CO_2 in a chemical reaction. There are many other solutions used for the removal of these two components, e.g. for different inlet concentrations or for more selective removal of one or the other component, and the detailed engineering will determine the most efficient solution. The treated gas stream is virtually free of H_2S and thus loses its “sour” gas status.

The amine solution used can be regenerated (that is, the H_2S and CO_2 are removed), allowing it to be reused to treat more sour gas. This is performed by heating the amine with a natural fired heater, or through heat exchangers using steam or hot water at 120 deg C. The regenerated amine solution is then sent back to the contact tower and continuously circulated in this way.

Modern amines are able to selectively remove specific compounds, such as H_2S whilst leaving most of the CO_2 in the gas. The CO_2 is an inert gas and does not affect the combustion process other than to reduce the calorific value of the gas. The gas turbines and reciprocating engines will not suffer de-rating with methane numbers above 80. The available data indicates relatively high methane content, so as long as the gas is kept free of water to prevent acid formation, CO_2 removal is not a priority. The Gerquduq gas has high CO_2 content, so an amine solution targeted for H_2S is recommended.

4.3.4.2 Incineration

H_2S is a toxic gas. At low concentrations it gives off a rotten egg smell, but at high concentrations it can kill humans and animals. If the H_2S is released to atmosphere, it must first be oxidised to SO_2. Incineration requires burning of the H_2S to convert it to SO_2. The process can take place in a tail gas incinerator, or in a thermal oxidiser.

A tail gas incinerator will achieve destruction efficiencies in the order of 98%. Thermal Oxidisers are available that can achieve destruction efficiencies greater than 99.9%, but the high cost of these units is difficult to justify considering the quantities of acid gas, and the good air shed at site.

H_2S by itself is a relatively easy gas to burn. However, the acid gas (tail gas) also has a high CO_2 level which lowers the overall calorific value of the acid gas. Additional natural gas will be required to ensure a good destruction of the H_2S.

4.3.4.3 Sulphur Recovery

At this stage, sulphur recovery is not considered economical as the World Bank Guideline allows the combustion of an H_2S quantity equivalent to 1.38% in the raw gas stream. Therefore, the H_2S and CO_2 extracted from the gas can be flared off. As the acid gas has a low heating value, some sweetened gas will need to be added to incinerate the gas properly. From a safety and environmental point of view it is considered unacceptable to vent the acid gas to atmosphere as it is heavier than air and poisonous.

In the case of gas being supplied from the Yatimtaq or Khoja Gogerdak fields, sulphur recovery will be required to limit the levels of SO_2 discharged to atmosphere. A wide-spread and commercially accepted process used to recover sulphur from acid gas is known as the Claus process and involves the following two steps:

1. Thermal Step. The H_2S is partially oxidized with air. This is done in a reaction furnace at high temperatures (1000-1400 deg C). Sulphur is formed, but some H_2S remains un-reacted, and some SO_2 is made. Natural gas may be required to assist in the oxidisation if the H_2S composition of the acid gas is low.
2. Catalytic Step. The remaining H_2S is reacted with the SO_2 at lower temperatures (about 200-350 deg C) over a catalyst to make more sulphur.

A simple block diagram of the Claus process is shown in figure 4.6 below:

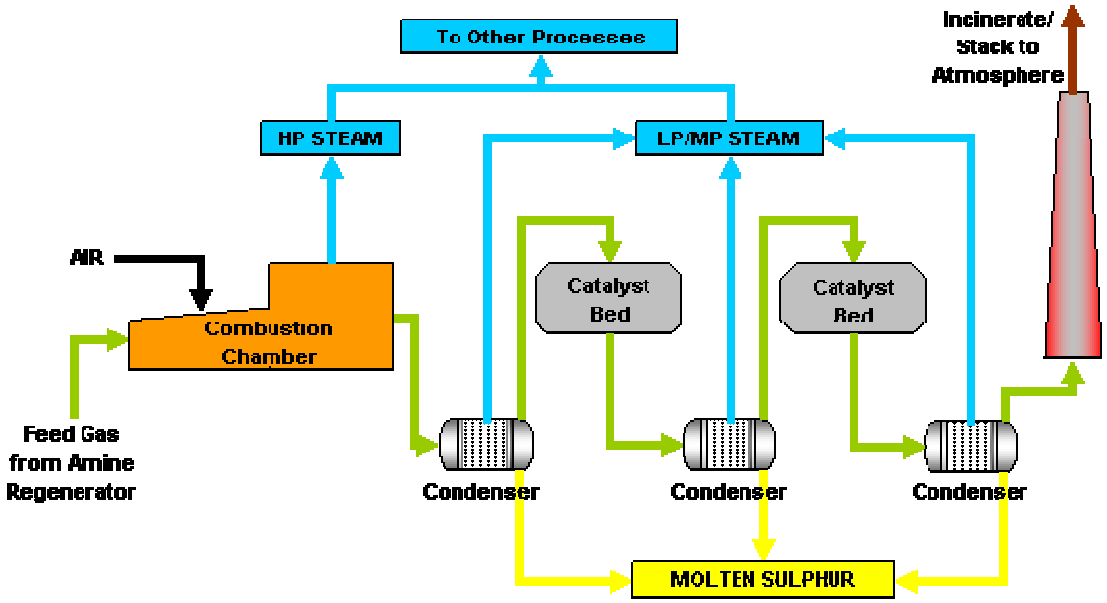

Figure 4.6: Claus Process Schematic

The Claus process is usually able to recover up to 97 percent of the sulphur that has been removed from the natural gas stream. The sulphur is recovered in its elemental form as a molten liquid. This can be transported as is, cooled and dried to a cake, or palletised.

Demineralised boiler water is required as part of the process, and steam is a by-product. The steam can be used in the amine process, for maintaining temperature of the molten sulphur storage, or for other process.

Elemental sulphur has a value as a fertiliser. Sulphur from the Claus process is reported to have a slower release than that from the biological or iron-redox process due to a slightly larger grain size, but is still valuable. The sulphur lowers the pH of the soil increasing the uptake and efficiency of plant nutrients. Sulphur is also present in some amino acids, and crops such as nuts and citrus fruits require sulphur to promote growth. It is also used in wet environments as a fungicide.

Historically there has been high demand for sulphur due to its wide range of applications and use in large consumption industries such as the fertiliser industry. In recent years the value of sulphur has fallen, attributed mainly to increasingly stringent global emissions requirements resulting in greater amounts of sulphur being produced as a by-product in the oil and gas industry.

The fertiliser works at Mazar-e-Sharif is the obvious choice for making the best use of the sulphur. Talks would need to be had with the engineers at the fertiliser works to determine the best use. The sulphur can be converted to sulphuric acid and used to create super-phosphate which is a fast release fertiliser. Otherwise, it can be used to make sulphur coated urea, a slow release fertiliser used where leaching is a problem. The fertiliser works currently produces urea so this is possibly the most effective use. Molten sulphur is sprayed over urea granules. As the molten sulphur dries and crystallises, cracks form which allow paths for water to reach the urea.

There are safety issues involved with the handling of pure elemental sulphur, so safe storage and transportation are required. Hazards to consider include combustion, explosion, inhalation, contact with skin and eyes. Again, the employees at the fertiliser works have experience with hazardous substances and are best trained to handle the elemental sulphur.

As the sulphur is applied to the urea in a molten liquid form, it is likely that the sulphur will be transported in this state from Gerquduq to the fertiliser works. The liquid sulphur would first be stored in an underground storage tank at the gas conditioning site. The storage bunker is kept at temperature by low pressure steam coils. Sulphur is transported in special insulated tankers. The tankers usually have a window of 72 hours to reach the destination. Steam coils are provided inside the tanker to re-heat if the sulphur solidifies.

The Amine process is considered appropriate for the H_2S removal at Gerquduq.

4.3.4.4 Reinjection

An alternative to sulphur recovery is to reinject the acid gas stream to an old depleted gas well that will not be put back into service. Reinjection captures all H_2S and CO_2 from the gas conditioning process. The Claus system captures only up to 97% of the H_2S and minimal CO_2. As such, reinjection is becoming increasingly common in the United States to help obtain project environmental consents.

After the acid gas is separated by the amine unit, it is compressed to a high pressure by a multi-stage compressor, in the order of 8-10 MPa depending on the pressure in the reinjection well. The acid gas must be dried to prevent acid formation and the gas is cooled by chilling plant between stages. The gas is then injected into a spent well. Care must be taken in the selection of the well to prevent the acid gas propagating to a live well and causing a short circuit. The AEAI gas report has stated there are a number of wells within the Gerquduq field that could be used for reinjection.

If gas hydrogen sulphide levels are such that flaring is not acceptable, then reinjection requires consideration as an alternative to the Claus system. There are studies that compare lifecycle cost of reinjection favourably with the Claus recovery system. These studies are based on nil value for the sulphur, and high operation and transport cost based on western wages. To assess the advantages of reinjection at Sheberghan, a value will need to be placed on the sulphur, ideally by

the fertiliser works that will be receiving it. Further discussions would be needed with the fertiliser works before an analysis can be made. In addition an assessment would be required of the reinjection well location and pressure, to allow evaluation of reinjection compressor and pipeline capital costs and the compressor power consumption and operating cost.

4.3.4.5 Biological

Biological technologies are suited to this flow and percentage of H_2S. They do not require additional energy for the process, and produce elemental sulphur without additional recovery measures such as the Claus process. However, there are several limitations including:

- Sensitive reaction required constant monitoring from supplier. The suppliers of this technology (Shell-Paques) have stated that they have a company policy of not letting their employees travel to Afghanistan.
- Inability to take large swings in sulphur content. The biological beds would not be able to handle the large swings in concentration of sulphur between the standard Gerquduq case and the alternate reserves.
- Water consumption
- Relatively high waste stream

Taking the above into consideration, the biological process is not likely to be suitable or able to be maintained at the Gerquduq site.

4.3.4.6 Iron Redox

LO-CAT® is a popular proprietary iron redox technology on the market provided by Gas Technology Products.
The patented LO-CAT process is a liquid redox system that uses a chelated iron solution to convert H_2S to innocuous elemental sulphur. LO-CAT's environmentally safe catalyst does not use toxic chemicals and produces no hazardous waste by-products. LO-CAT units can be designed for better than 99.9% H_2S removal efficiency.

The LO-CAT anaerobic design separates the absorber and oxidizer vessels, making product recovery possible. Hydrogen sulfide is removed and converted to solid sulfur in the absorber. The reduced catalyst solution is circulated to the oxidizer and regenerated by contact with air.

The basic chemistry is identical for all LO-CAT system configurations. The LO-CAT process absorbs H_2S, ionizes H_2S, oxidizes H_2S to S, reduces iron, absorbs oxygen, and then oxidizes iron. Hydrogen sulphide is thus converted to elemental sulphur using an environmentally safe chelated iron catalyst. The iron catalyst is held in solution by organic chelating agents that wrap around the iron ion in a claw-like fashion, preventing precipitation of either iron sulphide (FeS) or iron hydroxide [$Fe(OH_3)$]. The LO-CAT process is based on reduction-oxidation (Redox) chemistry. Two different redox reactions take place -- one in the absorber section, which

converts H_2S to elemental sulphur, and one in the oxidizer section, which regenerates the catalyst.

It utilised an iron catalyst to remove elemental sulphur in the following reaction

$$H_2S + \tfrac{1}{2} O_2 \xrightarrow[(FE)]{} H_2O + S^{\circ}$$

The process is shown in the following simple process flow, Figure 4.7:

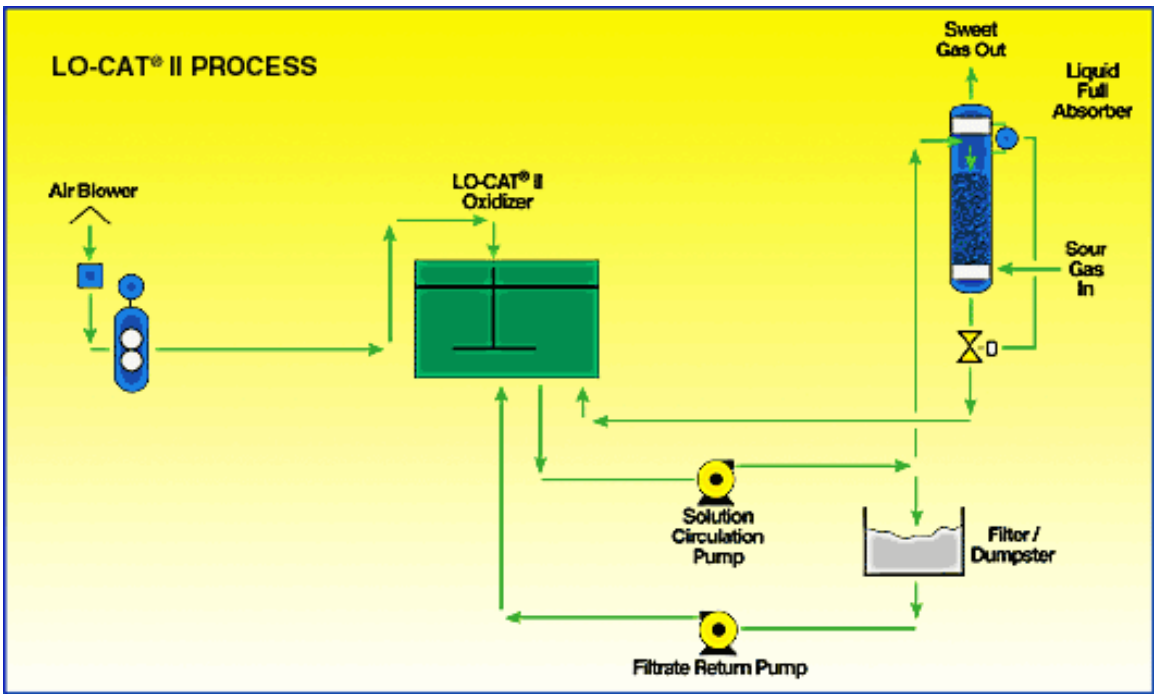

Source: Gas Technology Products

Figure 4.7: LO-CAT Process Flow Diagram

The advantages of the LO-CAT technology are:

- State-of-the-art LO-CAT technology is listed by the Environmental Protection Agency as maximum achievable control technology (MACT).
- The Lo-Cat technology can achieve 100% turndown.

Disadvantages include

- High capital cost
- Large quantities of catalyst required, meaning constant transport to site
- High cost of catalyst

The Iron Redox technology is not considered appropriate for the H_2S removal at Gerquduq due to the high cost of catalyst, and the transportation required to get the catalyst to site.

4.3.5 Water (H_2O) Removal

Power generation plants have operational and maintenance problems if there are even small amounts of water in the gas stream, so it is necessary to remove the water. Water removal is also a requirement for the pipeline transport of the gas to industrial, commercial and residential users. Water in the gas can combine with stray molecules to produce hydrates, a solid that can restrict gas flows. In addition, water in the presence of H_2S or CO_2 will form acids that will attack fuel lines and components. For both gas engines and gas turbines, dew point suppression (ie re-heat) at the fuel gas manifold is required. Gas turbines require a higher inlet pressure so require a higher level of dehydration than the reciprocating gas engines.

Most of the free water associated with extracted natural gas is removed by the simple knock-out vessels at or near the wellhead. However, the removal of the water vapour that exists in solution in natural gas requires a more complex treatment. This treatment consists of 'dehydrating' the natural gas, which usually involves one of two processes: either absorption, or adsorption.

Absorption occurs when the water vapour is taken out by a dehydrating agent. Adsorption occurs when the water vapour is condensed and collected on the surface.

4.3.5.1 Glycol Dehydration

A common form of absorption dehydration uses Glycol. The sweetened gas, which is saturated with water, will flow through the absorber from bottom to top and will be brought into contact with glycol, which flows in a counter stream from top to bottom. The gas will either bubble through trays filled with glycol or will come into contact with the glycol at the surface of metal bodies filled in that column. The rich glycol will be heated up via a heat exchanger and enter the regenerator, which mainly consists of a distillation column with a condenser on the top and a reboiler at the bottom. The absorbed water evaporates in the column and the reboiler and leaves the column at the top, while the glycol is ‘washed’ by the reflux of the condenser and leaves the column at the bottom at the desired concentration. This is the lean glycol that is circulated back to the absorber.

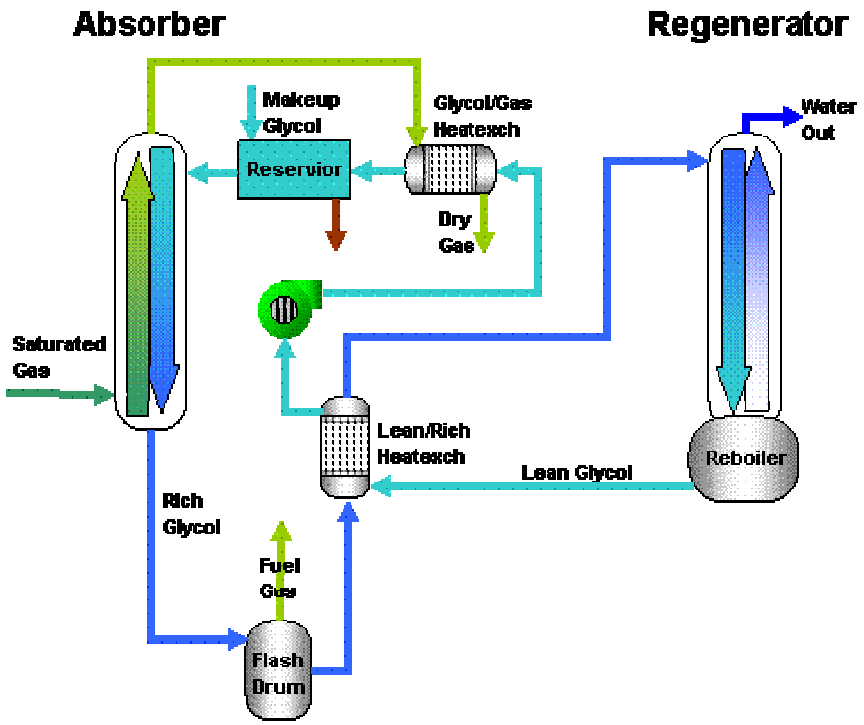

Figure 4.8: Glycol Dehydration Process Schematic

4.3.5.2 Solid-Desiccant Dehydration

Solid-desiccant dehydration is the primary form of dehydrating natural gas using adsorption, and usually consists of two or more adsorption towers, which are filled with a solid desiccant. Typical desiccants include activated alumina or a granular silica gel material. Wet natural gas is passed through these towers, from top to bottom. As the wet gas passes around the particles of desiccant material, water is retained on the surface of these desiccant particles. Passing through the entire desiccant bed, almost all of the water is adsorbed onto the desiccant material, leaving the dry gas to exit the bottom of the tower.

Solid-desiccant dehydrators are able to remove more moisture than glycol dehydrators, and are usually installed as a type of straddle system along natural gas pipelines. These types of dehydration systems are usually employed in situations of large volumes of gas under very high pressure, and are thus usually located on a pipeline downstream of a compressor station. Two or more towers are required due to the fact that after a certain period of use, the desiccant in a particular tower becomes saturated with water. To “regenerate” the desiccant, a high-temperature heater is used to heat gas to a very high temperature. Passing this heated gas through a saturated desiccant bed vaporizes the water in the desiccant tower, leaving it dry and allowing for further natural gas dehydration.

As the specification for water is not as high as what can be provided by solid desiccant dehydration, suppliers have not quoted prices for as they believe this technology is not competitive against glycol dehydration. The glycol dehydration is reported to have lower capital, operation and maintenance costs for this specification. If lower water content was required, solid desiccant dehydration would need to be considered.

4.3.5.3 Joule-Thompson Valve

If the reciprocating gas engines are selected, there is a possibility to dehydrate the gas stream as the gas is throttled from 12 to 4 bar g. The process is shown in Figure 4.9 The incoming gas stream is passed through a gas-gas heat exchanger which lowers the gas temperature. As the gas cools, water falls out of the gas stream. The gas is then passed through a Joule-Thompson expansion valve which drops the pressure, and temperature. At this point, further water falls out of the gas stream. A knockout vessel removes the liquid, then the gas is passed through the other side of the gas-gas heat exchanger to re-heat.

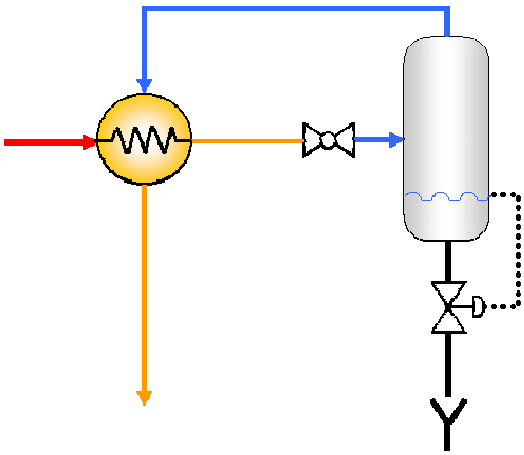

Figure 4.9: Joule – Thompson Valve Schematic

The advantages of this system are that there are no moving parts so minimal operation and maintenance costs. However, depending on the conditions, hydrates can form so care must be taken in the design and operation. Pressure fluctuations in the incoming gas will also have an effect on the level of dehydration. As a gas field depletes, the pressure will drop and the effectiveness of this system will also drop. Capital costs will not be far off a glycol system as the glycol system is a fairly standard technology so relatively cheap.

Considering that the incoming pressure is likely to fluctuate at site, particularly over the life of the plant, this option can not guarantee constant dehydration of the gas. A more reliable system will need to be installed.

4.3.6 Pressure Adjustment

Gas turbine plants require the gas delivery pressure between 25 – 35 bar g depending on the unit selected. The gas delivery pressure from the wells will be 12 bar g, so if considered the preferred technology, a compression plant would be required. The compressors can be gas or electric driven.

Given that the facility will need a black start capability and the compressor load will be in the order of 1.0MW for a 100MW gas fired power station, a gas driven compressor will be required. As the gas will be sour on start-up, a turbine is the preferred option. Two units would be required for redundancy.

Two turbine driven compression units have been included in the costing for the turbine options.

The reciprocating gas engines are able take a gas delivery pressure between 4 - 15 bar g. As such, no compression plant will be required. During the detailed engineering it is likely that pressure control valves will be specified prior to the engine.

4.3.7 Technology Cost Evaluation

The two viable H_2S technologies of Amine-Claus and Iron Redox have been compared against each other in the technology selection financial analysis contained in Appendix H. The comparison includes equipment and consumables for removing H_2S and converting all of the sulphur to an elemental form.

The Amine-Claus technology has the cheapest cost for H_2S removal. It is also the most proven technology in the industry, and the Afghan Gas Company has experience with this technology. It also does not require large quantities of consumables being transported to site. It is therefore recommended as the most appropriate H_2S removal technology.

4.4 Conclusion

4.4.1 Work by Others

The following work by others should be progressed in a timely fashion in conjunction with the power station development:

Work Required	Assumptions in this Report	Action
Electrical Transmission Construction Schedule	By commissioning, connection to only the Sheberghan section is possible, and connection to the rest of the Northern Region is probable. A second phase after Jan 2007 will connect to Kabul.	ADB funded TA 4318 – AFG .
Gas Field Development Schedule	There will be enough Gerquduq gas to follow the demand for power, which is dictated by the transmission connection	ADB TA 4354 AFG.
Gas Composition and Calorific Value	Composition as per Appendix G	AEAI gas sampling and testing ongoing to be resolved by Contract award.

Table 4.5: Related Projects

Based on the assumptions above, the best workable technology configuration has been selected. The preferred technology configuration is defined in the sub- sections.

4.4.2 Power Generation

The preferred technology for power generation at the Gerquduq site is the use of a number of reciprocating gas engines. The reasons for this are:

- it is among the lowest energy delivery cost of the options considered,
- there are options available for higher energy recovery from combined heat and power with the gas processing and plant and also combined cycle,
- there is negligible use of water removing project risk associated with unknown water supply, and leaving water resources for other usage.
- a phased delivery of smaller units is able to match both gas field and power transmission network development
- the smaller individual lumps of generation which matches requirement for frequency support throughout Afghanistan.

The process flow for the power generation plant is included in Appendix K.

4.4.3 Gas Conditioning

Based on the available data of gas composition at the Sheberghan gas fields, the gas conditioning requirements are H_2S removal (with acid gas flaring), gas dehydration, solids filtration and pre-heat prior to delivery to the gas engines.

The preferred technology for H_2S removal at the Gerquduq site is Amine Scrubbing. The reasons for this are it

1. is the lowest cost on an overall capital and operating cost basis.
2. is the accepted industry standard technology for this level of H_2S
3. is robust
4. can be turned down to cover the swinging H_2S composition
5. has been used on site previously so the local technicians have familiarity with the technology

The preferred technology for H_2O removal is Glycol dehydration.

Preliminary process flow diagrams are included in Appendix K.

5 Power Plant Engineering

This section provides preliminary engineering for the preferred gas conditioning and power generation technology options discussed in Section 4.

5.1 Preliminary Engineering

5.1.1 General

5.1.1.1 Contractual

The project can be procured through a single contract, or a number of EPC contracts. The challenge is to find the most appropriate method or mix for this particular project, taking into consideration the site, risks, schedule and costs. A comparison of the different approaches is summarised in the table 5.1 below:

	Single Contract	Multiple Contract Packages
Advantages	• Easier to manage from the owners perspective • No contract interfaces • One party accepts all the project risk • Larger project more attractive to large international contractors. • Some economies of scale for project	
Disadvantages	• Premium placed on the tender price for the management and risk	• Contract interfaces need to be clearly defined and managed. • Management / owners engineer required to supervise contracts. • Increased risk of delay and variation claims • Smaller packages less attractive to large international contractors

Table 5.1 Contractual Model Matrix

Aid agencies and Banks typically tend to prefer to prepare and manage one contract for all of the required works. The number of Vendor lead contractors that would be willing to take on the overall EPC project will be limited.
The number of potential EPC tenderers willing to take on EPC contracts for all or part of the scope ie Power Plant and Gas Conditioning plant separately may better suit funding agreements. The work for the Gas Conditioning plant should include the Water Pumping station upgrade also. The lower value gas conditioning plant will need to be installed for the entire capacity, but the larger value generation plant may be installed in phases to suit the grid and transmission upgrade work. Both power plant installation phases will be handled by the same contractor.

It is recommended that contractor prequalification is pursued to determine the interest from International Tenderers.

5.1.1.2 Site Layout

Two alternative layouts for the Gerquduq site are shown in Appendix J. These are:

1. Greenfield site outside the existing Gerquduq Gas Processing Plant Complex
2. Utilisation of existing Compressor Building for the Power Station.

A good greenfield site exists adjacent to the front entrance of the existing Gerquduq Gas Processing Plant Complex. The advantage of this location is a clear demarcation between the gas collection and conditioning plant, and the power generation plant. A dedicated store and administration building will be provided for the power station, as well as security fencing and guardhouse. The control, maintenance and switch rooms will be annexed to the engine hall. The switchyard will be located opposite the switch room and will have a clear easement to the existing Sheberghan substation. Expansion of the power house over its installation phases will be to the north-east.

For the greenfield site option, the new gas conditioning plant will be located adjacent to the existing Gerquduq Gas Processing Plant Complex, and the new power station. This allows a good corridor for running gas pipework, and a clear distinction between the power station and the gas conditioning works. Treated gas will be piped to the power station, and pressurised hot water raised from the engine waste heat will be piped to and from the gas conditioning plant in a closed loop.

The second alternative is for Tenderers to be given the option of using the existing gas compressor building to reduce project costs. The gas compressors and building were installed in the late 1980's by the Russians but the installation was not completed and it was never commissioned. The building would be provided "as-is" complete with overhead crane however it could be prudent to get the Afghans to clear out the building in anticipation of the installation works. This may demonstrate that the project is moving ahead and give something meaningful for some of the locals to do. It would be up to the tenderers to satisfy themselves that the foundation and structural strength are suitable for their equipment and the project. Under this scenario, the new gas conditioning plant will also be provided within the existing gas collection facility boundaries, as close as practical to the power station.

The second alternative runs the risk of unknown buried services that would be at the contractors risk. However, as the gas processing plant is not operating, there is minimal safety risk associated with this. If required, the existing compressor building could be fenced off with a separate access road provided.

Taking the above into consideration, the preferred site used as the basis for this report and costing is Alternative 1, the Greenfield option.

5.1.1.3 Heat and Mass Balance

The major feature of the site layouts above is the ability to closely integrate of the power station with the gas conditioning plant. Waste heat from the reciprocating engines is used to provide heat for the amine regeneration processes by way of a pressurised hot water system. This system is described in more detail in section 5.1.3.10.

The heat and mass balance for the whole system is provided schematically in Appendix L.

5.1.1.4 Control

The Control and Automation (C&A) for the power station, gas conditioning plant, and water supply shall be supplied individually under their respective packages. Two control rooms shall be provided, one of the Power Station and one of the Gas Treatment. It is necessary for the Power Station and Gas Treatment control systems to communicate with each other, and preferably an integrated architecture with a common LAN. This shall enable all equipment to be monitored from either control room which is particularly advantageous during commissioning and start-up. A radio link shall be included to provide remote monitoring at the power station of the Water supply equipment at Qarakent.
The general arrangement of the control system is shown in Appendix O.

The control system shall have the following characteristics:

- Multi-tier system consisting of equipment at unit, station and remote levels
- Unitized systems with dual redundancy of critical components to ensure very high reliability and availability.
- Redundant I/O and Historian Servers shall be provided, for both the Power Station, and the Gas Treatment Plant.
- Extensive use of computer equipment, LAN and WAN technology
- Open systems approach for interoperability of software packages including OPC connectivity
- Control and monitoring possible from the local (unit) level, the station level or the remote level (normally controlled remotely)
- Station and remote interface for all C&A and IPS systems via the Human Machine Interface (HMI)
- Time synchronisation between all systems with time reference being provided by a GPS clock.

The Plant will have a common overall control system, which will have distributed nodes located in each unit control compartment, in the station control room, in the gas treatment plant control room. The control system nodes will be linked via Ethernet or serial links. A TCP/IP based network is preferred for the higher (station) level LAN, with local instrumentation networks such

as Profibus or Foundation Fieldbus used for field interface, if supported by the equipment provided.

The unit C&A equipment will generally be housed in the unit control cubicles beside the machines. Station and common balance of plant C&A equipment will be housed in the station control room and/or adjacent equipment rooms. Auxiliary process control equipment, such as water treatment, will be sited with these plants as appropriate. The engine control, generator control, unit IPS and unit auxiliary systems will be provided on a per unit basis.

The power station will normally be manned and will also be monitored remotely from the proposed National Load Dispatch Centre (NLDC) in Kabul. There shall be the capability to also control the power plant from the NLDC. For maintenance purposes, or if there is a communications or other failure, it will be possible to monitor and control the units and power station to varying degrees from different locations including:

1. Locally at Auxiliary Equipment
2. Locally (Unit)
3. Locally (Station)
4. Remotely (NLDC)

5.1.2 Gas Conditioning and Supply

5.1.2.1 Scope of Supply

Provision of gas conditioning plant is a requirement of this project to provide sweet, dry gas at a suitable pressure for the power station. It has been assumed that others, under the existing ADB project TA No. 4354-AFG, will collect adequate gas and provide it to a manifold in the Gerquduq gas gathering plant. A contract will be let to take the gas from the gas gathering manifold, condition the gas, and deliver it to a flange at the power station. This contract will include all fabrication, delivery, civil works, installation testing and commissioning.

Gas will be sourced from the Jurassic layers of the Gerquduq gas field. This is a sour gas with H_2S content reported to be between 0.18% (USGS 2002) and 0.71%H2S (USSR 1982). This information comes from Sheb*erghan Feasibility Study Upstream Gas Supply: Availability, Quality and Required Future Work,* O'Connor 2005.

The scope of the gas conditioning work includes

- One (1) off Liquids Knock-out vessels
- One (1) off Amine gas sweetening plant
- One (1) off Glycol dehydration plant
- One (1) off Tail Gas Incinerator
- Miscellaneous Pipework and valves from the Gerquduq gas gathering manifold to the gas conditioning plant

- Two (2) off — Gas metering stations at the inlet to the Amine gas sweetening plant and also the glycol sweet gas flange including continual flow, temperature, CH_4, CO_2, H_2O and H_2S monitoring.
- Miscellaneous — Pipework and valves from the gas conditioning plant to the Power Station pressure reduction station
- Security fence and systems.
- Stormwater sewers
- Oily water sewers
- Miscellaneous — Chemicals, Consumables and spare parts for initial fill and first year of operation
- Miscellaneous — Civil works, installation, testing and commissioning

All of the Amine and Glycol miscellaneous equipment such as pumps, valves, controls & instrumentation will be supplied skid mounted. The Amine and Glycol contact towers and reboilers will be shipped separately, ready for simple installation at site. It is expected that the gas conditioning equipment will be designed so that minimal time will be required on site for construction and commissioning.

The gas conditioning plant will be tendered as a complete turn-key package. It will be up to the supplier to provide engineering and optimisation for the most efficient means to remove H_2S and the moisture. Tenders will then be assessed based on:

- price,
- delivery time,
- pressure drop across system,
- energy requirements, including tail gas incineration, glycol regeneration and total electrical load
- methane lost from main gas stream, and
- amine and glycol make up requirements

Off-take gas requirements are provided in table 5.2 below. The intake parameters are based on the most recent USGS testing, but will need to be confirmed by additional on-site testing prior to releasing tender documents.

Parameter	In-take Gas	Off-take Gas
Pressure	20 bar g	> 5 bar g - Supplier to nominate
Temperature	48 deg C	Supplier to nominate
Mass Flow	25,000 scm/h	25,000 scm/h
CH_4	89.36%	Supplier to nominate loss
H_2S	1.25 % v/v	5 mg/scm
CO_2	8.79% v/v	Supplier to nominate
H_2O	Saturated	7 lb/MMSCF (110 mg/scm)
He	0.01% v/v	Supplier to nominate
H_2	0.09% v/v	Supplier to nominate
O_2	0.05% v/v	Supplier to nominate
N_2	0.46% v/v	Supplier to nominate

Table 5.2: Off Take Gas Requirements

The individual components of the gas conditioning plant are supplied in the sub-sections below.

5.1.2.2 Gas Supply & Knockout Vessel

Two supply lines will be installed to take gas from the Gerquduq gas manifolds. The lines will be interchangeable, and will tap into both the Yatimtaq supply (sweet) gas manifold, and the Khoja Gogerdak (sour) gas manifold. The new supply arrangement can be seen on Drawing 1102864634 – 1022.

The reason for the ability to interchange is so that during times of:

1. start-up, small quantities of sweet gas can be supplied to the power station, prior to heat being available for the gas conditioning plant,
2. major maintenance on the gas conditioning plant, sweet gas or sour raw gas can be supplied to the power station if required.
3. low gas demand at the power station (during the initial phasing of the generating capacity and during maintenance), spare gas conditioning capacity can be used to supply sweet gas to the domestic users via various pipeline options.

One knock-out vessel will be provided prior to the amine plant to remove any water condensate in the line, and to remove any slugs of water and / or hydrocarbon condensate that travel up from the wells. Any condensate collected from the knock-out vessel will be drained to the drying basin.

5.1.2.3 Amine Gas Sweetening

The amine gas sweetening plant will be supplied with the following main components:

- Contact Tower
- Flash Vessel
- Regenerator and Boiler
- Liquid / Liquid Heat Exchanger
- Liquid / Air Heat Exchanger
- Water Scrubber
- Miscellaneous pumps, piping and valves
- Consumables and spare parts for initial fill and first year of operation
- Installation, testing and commissioning

Typical reciprocating gas engines are not sensitive to CO_2 in the fuel gas up to 20% and from our review it is expected that Methyl diethanolamine (MDEA) will be specified by the suppliers as the preferred amine. MDEA will target the H_2S, though amounts of CO_2 are still likely to be stripped from the gas stream. The ultimate choice of amine solution will be left to the supplier to nominate. There are other some proprietary amines that target the H_2S more effectively such as Sulfinol and aMDEA, and other amines that require less energy. The tender documents should be left sufficiently open to allow suppliers to offer their most effective solution in conjunction with the fact that there are ample quantities of free heat available from the power station, with the cost effectiveness of these solutions determined at the tender evaluation.

The amine regeneration requires heat to release the sulphur from the amine solution. For the MDEA solution, vaporisation temperature will be approximately 115 deg C, and an energy load of approximately 11.0MW is expected. Again, it will be up to suppliers to nominate these figures based on their proprietary solutions. This energy is best supplied from a closed loop high pressure hot water circuit that takes heat from the engine exhausts. The hot water system is discussed further in section 5.1.3.10.

The other inputs to the process are make-up amine and make-up water. The small amount of oxygen in the gas degrades the amine and increases make up requirements. Amine make-up will vary between vendors and may be as high as 20 kg/day (US$32,400 PA at US$4.50 per kg). Plant vendors will nominate and guarantee the make up required. Make-up water will be required at a rate of approximately 0.35 m^3/h. Again, it will be up to the suppliers to nominate the consumptions based on their system designs.

Other than sweet gas, the outputs of the amine system include acid gas and flash gas. The acid gas released from the regeneration process will be flared to atmosphere (refer section5.1.2.5). There will also be sulphur laden gas from the flash vessel. As the sulphur oxide emissions are within World Bank guidelines (ref *World Bank Group Pollution Prevention and Abatement handbook 1998 – Thermal Power: Guidelines for New Plants)*, sulphur recovery or reinjection is not required at this stage. A natural gas supply will be required to operate the flare and ensure adequate combustion of the H_2S.

5.1.2.4 Glycol Dehydration

The glycol dehydration plant will be supplied with the following main components:

- Gas/air heat exchanger (if required)
- Contact Tower
- Regenerator and Boiler
- Liquid/Liquid Heat Exchanger
- Liquid/ Gas Heat Exchanger
- Miscellaneous pumps, piping and valves
- Consumables and spare parts for initial fill and first year of operation
- Installation, testing and commissioning

In addition, process vendors may choose to improve the moisture absorption efficiency of the glycol contact tower by reducing the temperature of the gas from the amine plant. A gas / air fin fan heat exchanger will suffice most of the year. During periods of high ambient air temperatures, eg above 35 deg C it will be more cost effective to reduce the gas processing output or modify the required quality of the gas going to the power station or import some power from Uzbekistan. There is some flexibility in this regard for short duration excursions.

The glycol regeneration requires heat to release the water. This is a small but high temperature energy load. The most effective way to supply this heat is through a direct gas fired tube. High pressure steam generated from the engine waste heat was investigated, but considering the small energy demand, and the complications of providing demineralised water to site and generating steam for such a small load for the boiler system, this option was discarded. It is expected that the energy load will be in the order of 130 kW, which equates to approximately 13.5 Nm^3/h (compared to the power stations 25,000 Nm^3/h).

The other input into the process is make-up Glycol. It may be required at a rate up to 3.5 kg/h (US$107,300 PA at US$3.50 per kg), though it will be up to suppliers to nominate and guarantee the make-up required.

Other than dry gas, the only other outputs are water. The water released from the regeneration process is evaporated to atmosphere by the reboiler.

5.1.2.5 Tail Gas Incinerator / Flare

A tail gas incinerator (flare) shall be provided under the gas conditioning contract to oxidise H_2S in the acid gas stream to SO_2. There will also be small amounts of vapour from the amine flash vessel and condensate flash vessel with CH_4 that will need to be oxidised to CO_2 and water before release to atmosphere.

A tail gas incinerator can achieve H_2S destruction efficiencies of approximately 99.9%. The flare will be in the order of 20m height and 2m diameter at the base. The incinerator will be refractory lined and supplied with its own control panel, gas train, and rain shield.

The acid gas will sustain its own flame when the gas conditioning plant processes 1.25% H_2S. When the plant processes gas down to the reported 0.18% H2S, additional firing of natural gas in will be required to maintain the flame and destruction efficiency. This gas consumption will be in the order of 65 m^3/h. Actual figures will need to be nominated by suppliers at the time of tender.

Relief valves and depressuring lines will also be connected via a knockout pot to the flare.

5.1.3 Power Plant

5.1.3.1 Scope of Supply

Sweet dry gas will be provided to the power station via the adjacent gas conditioning plant It has been assumed that others, probably under the existing ADB funded project TA 4318 – AFG, will transmit the generated power throughout Afghanistan.

The scope of the power station includes:

- One (1) off — Gas supply manifold and coalescing filter banks
- One (1) each — Fuel gas train per engine
- 100MW off — Large Scale Reciprocating Lean Burn Natural Gas Engine Generating Sets
- One each — Allen Bradley SL500 PLC with Woodward Digital Synchroniser and Load Control
- 100MWe — Switchroom and control room inclusive of HV and LV switchboards, control panels and consoles, fire protection panel, UPS, air conditioning plant, battery banks and all other items contained within these rooms.
- 100MWe — Station Auxiliary Transformer rated, 11/0.433kV.
- 100MWe — Station Earthing Transformer -Buildings and enclosures, workshop/store annexe, overhead crane.
- Four (4) off — Exhaust gas / pressurised hot water heat exchangers to meet amine regeneration demand
- One (1) off — Pressurised hot water system
- One (1) off — Compressed Air System
- One (1) off — Black-Start Diesel Generator
- Misc — Power station buildings
- Misc — Security fencing and systems
- Miscellaneous — Pipework, valves and supporting elements

- MISC Building air conditioners.
  -Gas engine and ancillary equipment spare parts.
  -Special tools required for servicing up to major overhaul, including performance monitoring and adjustment
- Miscellaneous Consumables and spare parts for initial fill and first year of operation
- Miscellaneous Installation, testing and commissioning
- One (1) off Delivery (refer section 5.1.5.15)

Power will be supplied to the Sheberghan Substation by a short 110kV transmission line. Pressurised hot water for amine regeneration will be supplied to a flange at the gas conditioning plant fence , and return water will be collected from a flange at the gas conditioning plant fence.

5.1.3.2 Power Generation Units

The power generation units are to be provided in a phased manner up to the nominal 100MW. The EPC contract is expected to be either let to a manufacturer of large reciprocating gas engines or to a typical EPC plant contrcator, who will provide for a complete turnkey package. The power generation contract will include the following:

- Lean burn reciprocating gas engine,
- Gearbox between engine and generator
- Generator to match engine power output, 11kV, 50Hz,
- Base frame and flexible coupling for engine and generator,
- Charge Air system,
- Fuel gas system including coalescing filters.
- Exhaust system including interconnection to pressurised hot water system (section 5.1.3.10 below)
- Cooling system including fin fan cooling bank for intercoolers, jacket water and lube oil systems.
- Lube oil system including pump in and pump out systems, fresh oil and waste oil storage.
- Compressed air system for engine start and service air
- Instrumentation and Control Equipment
- Platforms for maintenance access
- Mobile Noise curtains between engines to allow maintenance.
- Building enclosure complete with access doors and mechanical handling facilities.
- Engine air intake plenums and dedusting
- Building ventilation systems
- Fire and Gas Detection
- Security fence and systems
- Control Room
- Fresh water drains
- Full engine drip tray piped to oily water drains

- Oily water drains and oil sepa separator
- Mechanical toolshed and store
- Consumables store
- Consumables and spare parts for initial fill and first year of operation
- Installation, testing and commissioning

5.1.3.3 Engine-Generator Skid

The modern natural gas only engines are typically of lean burn design, which reduces NOx emissions. There are a number of manufacturers that make the large scale engines such as Wartsila, Caterpillar, Rolls Royce and Mitsubishi. Twelve to twenty cylinder bores are arranged in a “V” configuration and are typically 34” diameter.

The engines will be delivered mounted to the skid (base frame), with the generator and gearbox connected by flexible couplings. The generator is likely to be 6.3 to 11.0 kV, depending on the engine output. Overall output will be 6 to 9MW depending on the supplier chosen. In the power station the engines will be arranged in groups of three or four, with adequate lay-down areas on either side of these groupings.

The skids will be supplied dry (no oil or water), with all engine mounted pumps, instrumentation, piping and valves. The turbocharger may be removed during transportation to reduce weight and height.

The Caterpillar G16CM34 units have a net electrical efficiency of 43.6%, based on site conditions, no tolerance on the fuel, Cos $\varphi = 0.8$, and considering pumps. Parasitic load is 2% of electrical output. For 16 units, the net plant rating will be 102.3MWe at the high voltage side of the step-up transformer, and fuel consumption will be (LHV) 228.56 MW(th) (24,012m3/hr). This is approximately (HHV) 251.42 MW(th). Note that losses across the step-up transformers will be in the order of 250 to 280 kWe each (ie 2 off) and the loss in the transmission to the Sheberghan substaion will be approximately 20 kWe

5.1.3.4 Charge Air System

The intake (charge) air system will include filtration suitable to high dust loads, heating and methodology for times of cold ambient temperatures, silencing, intercooler, expansion bellows and ducting.

During normal operation, charge air will be drawn from the outside of the plant. When the ambient air temperature drops below freezing, charge air will be drawn from inside the power station. A small cold start boiler is also recommended to pre-warm a cold engine before starting to remove any condensation that has formed on air intake ducting.

5.1.3.5 Fuel Gas System

Fuel gas shall be supplied to a manifold at the power house as sweet, dry, filtered gas. Prior to the supply flange there will be a gas chromatograph that will measure gas pressure, temperature, CH_4, CO_2, H_2S and H_2O levels. The chromatograph will actually be under the gas conditioning equipment supply contract, but will form an important part of the power station monitoring.

Gas will be supplied at approximately 18 bar g. A pressure reducing valve (if required) will be supplied under the power contract package. All pipelines, coalescing filters, emergency shut off, pressure regulating and control valves will also be supplied under the power contract package.

5.1.3.6 Exhaust System

The exhaust system includes turbocharger, ductwork, expansion bellows, lagging, silencer, bursting discs, emissions stacks & support structure. It is likely a single support structure for the emissions stacks will serve the group of three or four engines to reduce costs.

5.1.3.7 Cooling Water System

The cooling water system will cool the intercooler, jacket water and lube oil. It will consist of all pipework, thermostats, pipelines, valves and fin-fan radiators. The cooling circuit will consist of a number of closed loop cicuits, and will only require minimal make-up water. Compensation tanks will allow for thermal expansion of the cooling fluid. The cooling fluid will be water, with chemical additives to assist with corrosion protection.

As discussed in the *Power Plant Alternatives Report – May 2005*, evaporative cooling has been ruled out as a viable technology due to the high water consumption. Fin fan cooling is a suitable technology for the heat loads generated from the reciprocating engines. Similar technology was installed at site by the Russians for the gas compressor station (though never commissioned). The fin fan radiators will be positioned outside the building. All pipework to and from the radiators will be below ground to prevent freezing during winter. Any outside pipework above ground will be insulated and electric heat traced to prevent freezing during times of shut-down.

5.1.3.8 Lube Oil System

The lube oil system will be supplied skid-mounted and include all filtration, cooling heat exchanger, lube oil header tank and control valves. The system will include oil drain pumps and a waste oil tank and also clean oil storage tanks and circulating pumps to the header tank. Engine oil fill pumps will also be installed.
Each engine will be fitted with complete engine drip trays. Miscellaneous pipework and valves will be provided to connect the skid to the engine and storage tanks.

Used oil is expected to be approximately 150 to 300 tonnes per year for a 100MW station, depending on the running hours and H_2S level in the incoming gas stream. This oil is to be free issued or sold to the local community at minimal charge.

5.1.3.9 Compressed Air System

Two compressed air systems will be provided. One for engine start at a nominal 30 Bar g and another at nominal 7 Bar g for general plant operation, and both will include air compressors, receivers, filtration, driers, pressure regulating valves, pipework and valves. All plant and service air will be dried to prevent freezing in Winter.

5.1.3.10 High Pressure Hot Water System (HPHW)

The amine regeneration process is the only significant heat load at site. Traditionally this has been provided by direct gas fired reboilers however HPHW or steam are also good options especially as we have waste heat from the open cycle gas engines. At this stage, the heat load at the amine process is expected to be approximately 11MW(th) at 120 deg C. For this heat load, High Pressure Hot Water (HPWH) has been selected over steam as the preferred heat transfer medium for the following reasons.

1. Dispenses with the requirement for deaeration, water treatment systems and chemicals.
2. The pipe diameters required for HPHW systems are much larger than steam and return condensate systems however as the two plants are adjacent to each other there is minimal extra cost for hot water piping. Steam systems are also traditionally built to higher and more costly standards.
3. No requirement for high maintenance condensate recovery system.
4. Blow-down, and hence feed water, are not required, further reducing the site water consumption
5. The system is a closed circuit so corrosion and fouling are minimised
6. High maintenance steam traps are eliminated

The high pressure hot water is heated by the engine exhaust gases in a shell and tube heat exchanger. The hot water temperature will be raised to a nominal 140 deg C to ensure adequate heat transfer at the amine process.

The whole system is pressurised to prevent flashing to steam. It is important to consider the highest point in the system, as with a HPHW system, this will be under the least pressure. The lowest system temperature should be approximately 7.5 deg C above the highest system temperature. At 140 deg C delivery, this is approximately 3.5 bar g. The system is best pressurised by gas over water. Air can be used, but additional deaeration is required. Preferably, inert gases such as nitrogen or Carbon Dioxide is used. The ultimate system design and configuration will be left to the supplier so that they can nominate their most cost effective system.

5.1.3.11 Cold / Black Start Generator

As the Amine sweetening process requires heat from an engine for the regeneration, it will not be possible to strip H_2S without the engines running. In this instance, gas will be taken from the sweet gas reserves at Gerquduq during start-up, and switched to the sour gas field once the first engine is warmed and is providing the requisite heat to the amine process.

For cold start during the middle of winter, the oil temperature will be raised by running the black start generator and circulating the engine oil through the main engine oil system. Oil cooling will be bypassed.

A black-start diesel generator will be provided with the capacity to start one gas unit on sweet gas, and provide station auxiliary power. The first unit will be powered by sweet gas from the Gerquduq field, so the black start unit will not need to supply the gas conditioning plant.

5.1.3.12 Powerhouse Building

The power generation contractor shall supply the building based on their best layout to suit the provided equipment. The powerhouse building shall include:

- Engine hall superstructure, cladding and roofing
- Utility block superstructure, cladding and roofing for housing control-room, switch-room(s), workshop, and ablutions.
- Engine hall and utility block earthworks and foundation
- Ventilation for engine hall
- Dust Filtration for engine intake ventilation system
- Air conditioning / heating for control-room and switch-room
- Plumbing, ablutions, eye-wash and service water
- Electrification, internal and external lighting and power outlets
- Overhead crane
- Fire and gas detection, pump-house, piping, sprinklers, alarms, hoses and extinguishers
- Noise curtains between engines for maintenance activities.

5.1.4 Electrical Interconnection

Power will be taken at 11kV at the switchyard main breakers, and be transmitted and interconnected to the existing Sheberghan sub station approximately one kilometre away.
The scope of works for this contract includes

- One (1) off 11/110kV transformer
- One (1) off 11/110kV switchyard
- One (1) off 2km (approx) 110kV transmission line and Sheberghan substation interconnection

The generation voltage will be 11 kV and the output terminals of each generator will be connected to an 11 kV bus via a generator circuit breaker as shown on the station single line diagram drawing No.102864634-1512. Synchronisation of each generator will be carried out at the generator circuit breaker. The 11 kV bus will be split into two sections by a bus section circuit breaker and each section shall be connected to the transmission system via an 11/110 kV generator step-up transformer. Preliminary calculations indicate that the fault level on each section of the 11kV bus will be approximately 46 kA and it will be necessary to operate with the bus section breaker open when more than 50 MW is being generated.

110kV has been selected as it is the voltage of the existing substation. Construction of double circuit 220kV line is intended for installation from Sheberghan to Mazar-e-Sharif, but it will not have any affect on the choice of transformer.

Two 11/110 kV generator transformers will be provided and each will have a dual rating of 43/68 MVA, the lower (ONAN) rating will be achieved by natural air cooling and the higher rating by forced (ONAF) air cooling. The ONAF rating of the two transformers operating in parallel will match the maximum station output (100 MW). During the earlier stages of the development or when the load is low the ONAN rating can be used. However it would be advantageous to run the cooling fans even under low output conditions as the transformer will be operating at lower temperatures which will improve longevity and reduce load losses. By using forced cooling for the higher rating the shipping weight with oil can be kept to minimum (approximately 80 tonnes).

The plant auxiliary loads will be supplied at 400 volts via two 11/0.415 kV auxiliary transformers, each transformer will be connected to a separate section of the 11 kV bus. The auxiliary transformers will be located at the power generating plant building together with the main 400 volt switchboard. The auxiliary transformers will be sized to allow direct on line starting of all motor loads. Auxiliary loads in the powerhouse and other buildings on the site will be supplied from 400 volt sub-boards fed from the main 400 volt switchboard.

5.1.5 Civil Works

The civil works portion shall include:

- Road rehabilitation and bridge strengthening required for transportation of equipment to site
- Bulk earth works of power station and gas conditioning site
- Site access roads and plant maintenance access roads
- Drainage and sewerage
- Fences, gates and landscaping
- Foundations for plant and equipment
- Powerhouse building and utility annex
- Administration building
- Switchyard civil works

- Heavy workshop and bulk store
- Guardhouse
- Water Supply including pumphouse rehabilitation , new downhole pumps and pipeline.

5.1.5.1 Civil Design Criteria

Civil design shall be undertaken in accordance with the provisions of the Uniform Building Code 1997, or the appropriate national design standards and codes of practice of Afghanistan, or equivalent internationally accepted standards.

5.1.5.2 Preliminary Geotechnical Investigation

To provide guidance to EPC bidders, and if time permits, it is recommended that geotechnical investigations are undertaken at the proposed power station location. The investigations are to provide information on ground conditions at major structure locations for inclusion in the Bid Documents. The report should contain factual information only, as it is best that EPC bidders interpret the data according to their own requirements and proposals for structures. The scope of the investigation will, in part, be subject to the availability in Afghanistan of appropriate drilling equipment and laboratory testing facilities. The scope below assumes that normal equipment and facilities are available.

Fieldwork
Investigation drilling is required at each of the major structure locations. The drilling typically will be to depths of 20m to 30m and comprise fully cored holes using triple tube coring techniques. The following will generally be required for each drillhole.

- Standard Penetration Tests (SPT) at 1.5m depth intervals
- Undisturbed samples of weak cohesive soils recovered using thin-walled sample tubes for laboratory consolidation and strength tests
- A PVC standpipe piezometer in the completed hole to measure groundwater levels
- Drill log describing materials encountered, results of downhole tests, samples recovered, drilling techniques and standpipe construction.

In addition to drilling it is recommended that a number of inspection pits are excavated to examine near surface materials (i.e. to depths of about 5m) and collect bulk samples for laboratory tests. The strength of the soil exposed in the pits will be measured by miniature shear vane. Descriptions of materials encountered in pits and results of field tests will be recorded on pit logs. Laboratory tests would include index tests (e.g. particle size, plasticity indices, water content) and compaction and CBR tests.

The drillhole and inspection pit locations will be fixed by topographic survey.

Reporting
The results of the investigations will be compiled in a Factual Report. The report will contain the drillhole logs, inspection pit logs, results of laboratory tests, water level measurements and survey information.

5.1.5.3 Seismic Criteria

Preliminary sizing of foundations and major structural elements for seismic actions should be undertaken in accordance with the requirements of the 1997 Uniform Building Code for seismic zone 4. A different design value may be justifiable if a site specific study is undertaken, which takes into account the proximity of active faults, design recurrence intervals and soil conditions at the site. This is recommended and can be undertaken as a desktop study.

5.1.5.4 Regional Road Infrastructure Rehabilitation

The delivery route for heavy plant and equipment will be determined by the successful tenderer but assuming that the most likely overland route is through Mazar-e-Sharif from the Uzbekistan border the following activities will be required.

- Route study and road condition assessment between the Uzbekistan border and Sheberghan including capacity assessment of four road bridges, as well as transit through the cities of Mazar-e-Sharif and Sheberghan.
- Limited spot repairs to the local highway network
- Traffic management planning and associated temporary works for transit through urban areas
- Temporary strengthening to road bridges as required. The existing bridges were observed to support heavy commercial loads and will have been used for military traffic loading of approximately 60 tonnes. Structural damage was observed in the supporting structure of 1 bridge on the likely route, and river bed scour has exposed piles on at least one other bridge

5.1.5.5 Bulk Earth Works

Bulk earthworks will comprise:

- Strip and stockpile topsoil. Clearance of mines and unexploded ordinance by others
- Grading and levelling of site in preparation for construction within each battery limit

5.1.5.6 Site Access and Plant Maintenance Access Roads

Access roads will comprise:

- Heavy duty asphalt 2 lane plant access road from existing road network to plant gates on suitably prepared sub-base

- Internal site access roads from steel mesh reinforced concrete slabs on suitably prepared sub-base

5.1.5.7 Drainage and Sewerage

The drainage systems for the power station and gas conditioning plant shall include:

- Clean storm water from buildings and hard stand areas piped to soakage
- Oily and potentially contaminated storm water piped separately from clean storm water to packaged separation system and then to soakage
- Sanitary drains to packaged treatment system.

5.1.5.8 Fences, Gates and Landscaping

The following features shall be provided to plant perimeters:

- Vermin proof perimeter fence or wall with barbed wire to perimeter of power plant, gas treatment plant and switchyard. Signage will be provided on the fences in local languages and symbolically to warn people of the dangers within the respective areas.
- Electrically operated sliding gates controlled from gatehouse to power plant and gas treatment plant.
- Excess soil from site clearance to be spread evenly around the exterior of the site perimeter and re-vegetated in keeping with the prevailing natural environmental conditions

5.1.5.9 Foundations for Plant and Equipment

Foundations for plant and equipment shall be designed to resist all static, seismic and dynamic loads from mounted equipment supported, in service and during installation, commissioning and maintenance. Pad type footings are to be provided for all equipment with allowable bearing and settlement criteria determined from the results of a site specific geotechnical study. Foundations shall include the following features:

- Excavated surfaces to be protected with a 50mm layer of site concrete
- Foundations to be constructed from reinforced concrete
- All foundation sides to be cast against formwork
- Concrete mix design and surface shape and finish of exterior foundations to provide lifetime resistance to freeze – thaw action.

If time permits, a preliminary geotechnical study of the site shall be performed prior to the issue of tender documents.

5.1.5.10 Powerhouse Building and Utility Annex

The layout and geometry of the powerhouse building shall suit the requirements for installation and maintenance of the power plant equipment and other such requirements of the power plant supplier. A utility annex housing control room, switchrooms, light engineering workshop and staff amenities is to be provided at the end of the powerhouse machine hall. The generic features of the powerhouse building include:

- Reinforced concrete building and machine foundations and ground floor slab on grade
- Steel frame superstructure for machine hall with lightweight metal cladding system
- Reinforced concrete frame or steel frame structure with ground floor slab on grade and suspended slab for attached utility block with thermally insulated cladding system
- Mechanical ventilation for machine hall
- Dust filtration system for machine hall air intakes
- Air conditioning / heating for control room, switchroom, light engineering workshop and amenities
- Plumbing, ablutions, eye-wash and service water
- Electrification, internal and external lighting and power outlets
- Overhead maintenance crane to machine hall, lifting capacity 10 tonnes.
- Fire detection, pump-house, piping, sprinklers, alarms, hose reels and extinguishers
- Acoustic screens or curtains between the engines to enable allow maintenance activities to continue with engines running.

5.1.5.11 Administration Building

The Administration building shall be a free standing structure separate to the power house, and shall include the following:

- Director / Station Managers Office
- Offices general (5 off)
- Meeting / Board / Training room
- Reception
- Technical Library
- Prayer Room
- Lunch room
- Kitchen (meals provided by employer)
- Toilets and Showers (Male & Female) including lockers, benches, etc
- Laboratory (oil / gas testing)

The ambient extremes vary considerably and both heating and cooling will need to be provided to the building, heating via water radiators using water jacket heat is expected to be cost

effective. Cooling of the building shall be by a reverse cycle heat pump, which is also an efficient way to both cool and heat the building. Another option is to use an absorbtion chiller however the capital costs for this has not been included.

In Afghanistan it is common for the employer to provide meals. The lunch room shall be sized to hold 25 people and a kitchen provided to cater for this.

Construction of the administration building shall comprise:

- Reinforced concrete foundations and ground floor slab on grade
- Reinforced concrete suspended floor slab
- Reinforced concrete or steel frame superstructure with thermally insulated cladding system

5.1.5.12 Guardhouse

The guardhouse will be provided at the entrance gates to the site. The guardhouse will be sized for two guards per shift. It will include power and communications facilities (CCTV, intercom and telephone), have radiator heating, and air conditioning with small kitchen facilities and a toilet.

5.1.5.13 Engineering Workshop and Bulk Store

A free standing engineering workshop is required for routine maintenance and engineering duties, approximate floor area 250m^2. A free standing bulk store is required for storage of large spare parts and items requiring covered storage, approximate floor area 800m^2. Construction of the workshop and bulk store shall comprise:

- Reinforced concrete foundation and ground floor slab on grade
- Steel portal frame superstructure with lightweight cladding
- LV power supply and lighting (3 phase supply required in workshop)
- Heavy duty storage racking to bulk store allowing for fork hoist access

5.1.5.14 Water Supply & Treatment

The proposed configuration requires approximately 0.35m^3/h for top-up of the amine system, and only minimal water for the initial fill, maintenance, ablutions, etc. Total consumption is expected to be less than 10 m^3/d, or one truck load. Although this is a minimal amount of water, the pumping station and 7km pipe from Qarakent need to be refurbished to ensure reliable supply to site. It has been reported that the existing pipeline is leaking in a number of places.

The water delivery to site will incorporated in the gas conditioning plant contract including:

- Two (2) off Borehole Pumps

- Two (2) off Reservoir Pumps
- One (1) off Pipeline rehabilitation
- Miscellaneous Fittings, elbows, pipeline, valves, filtration, etc
- Miscellaneous Electrical Upgrade, Controls & Water Metering
- Miscellaneous Existing Equipment Removal & Building Rehabilitation

The pipeline can be duplicated, but it is probably more cost effective to rehabilitate it. There are a number of ways to do this, including slip-lining and “cured-in-place” lining. Sliplining is completed by dragging a smaller diameter polyethylene pipe inside the existing damaged larger steel pipe. It will be up to tenderers to nominate the most cost effective way to perform this work given the site conditions.

Water needs to be treated before it is used as either hot pressurised water for amine regeneration, or in the amine process as make-up water. The supplier of the gas conditioning equipment will be responsible for water treatment for the amine process make-up water. The supplier of the power generation equipment will be responsible for water treatment for the pressurised hot water circuit.

The composition of the supply water from the boreholes is not known. This obviously has an impact on the equipment required for treatment. It is recommended later in section 5.5.1 that a sample from Qarakent be tested in the newly established laboratories in Kabul.

For the water quantities needed, it is expected that a small reverse osmosis unit will be sufficient for water treatment. Tenderers will need to nominate the water quality required for their equipment. This treatment will be minimal and will not be as onerous as that required for boiler feedwater.

Drew Chemicals has recommended either of two products for this service and these are Amersite 503 at $7 per kg and Performax 102 at $4.50 per kg. The Performax is nitrate based and would therefore need to be mixed with a biocide to prevent biological degradation of the nitrates and therefore continued checking and monitoring.

The Amersite is tannin based and has superior scale preventation and alkalinity control although does not cope with Oxygen, deposit buildup and protect mixed metal systems as well as the Performax. The Amersite is a one product solution for the closed hot water loops and would not need checking or maintaining after filling. Future complete or part dumping would require testing for Tannin index and PH to determine the makeup requirements.

A complete dose can be injected into the system using a dose point. This would require 4.5 litres per m3 of water.

The Amersite can be bought in 25-liter packages and can be pumped straight from the container as neat liquid into the heat loop via drain valves.

5.1.5.15 Transport to Site

The most feasible overland delivery route to Afghanistan is from Europe, via Russia, Kazakhstan and either Uzbekistan or Turkmenistan. The largest single component will be the reciprocating engine, less turbocharger. Depending on the engine size provided by the successful tenderer, the heaviest deliveries could weigh up to 120 tonnes.

The cost of delivery to site is an unknown, and will require a detailed route survey that is largely dependent on the point of origin. Point of origin is dependent on the tender evaluation. As the route survey is an expensive exercise, it is expected that the tenderers will provide a provisional sum for delivery cost in their submissions, and a fixed cost to perform the detailed route survey should they be successful. Equipment suppliers advise that transportation of loads of this order are routinely achieved without significant technical evaluation, so a detailed route survey from the point of supply to the Afghan frontier is not considered necessary.

For the purposes of the feasibility study, we have estimated the cost of delivery to site by air freight to Mazar-e-Sharif from Eastern Europe.

5.2 Operation and Maintenance

5.2.1 Maintenance Philosophy

The contracts for the supply and construction of the gas conditioning plant and for the power station will also include operational and maintenance components. For the power station, this will cover the first major overhaul of the engines which depending on operational requirements is estimated to be at 60,000 – 90,000 operating hours (about 7.3 -10.7 years at 96% availability). After the completion of a maintenance lifecycle to the first major overhaul, maintenance staff will be familiar with the full range of maintenance tasks.

The gas conditioning plant has a less onerous maintenance requirement, but an equally complex operation requirement. The operation and maintenance contract for the gas conditioning plant will be until the operators are proficient at running the plant over a range of conditions and the first major vessel inspections are complete, estimated at two years operation.

Transfer of knowledge to local staff on both the operational and maintenance aspects will occur during these time periods.

The maintenance contracts will also provide for spare parts for the first year of operation. It will be up to the responsibility of the GoA departments to purchase spare parts and consumables from their operating budgets. It will be the responsibility of the GoA to provide consumables such as oil throughout the life of the facility.

5.2.2 Manning Levels

5.2.2.1 Manning Levels 100MWe

The station will require personnel that can undertake tasks and have the necessary skill level to operate and service the plant. The staff structure for the power generating plant (100MWe) should be as follows:

Role	Quantity	Education Level	Salary (approx.) USD / month
Management & Administration			
Power Station Manager	**1**	**B. Eng. (Mech. / Elec.)**	**500**
Assistant Power Station Manager	**1**	**B. Eng. (Mech. / Elec.)**	**450**

Role	Quantity	Education Level	Salary (approx.) USD / month
Administration & Finance	**1**	**B. Comm.**	**350**
Security	5 **(2 / shift)**	**Unskilled**	**200**
Cleaners, tea lady / man	3	**Unskilled**	**200**
Gardener/ Bus Driver	1	**Unskilled**	**200**
Cooks	1	**Unskilled**	**200**
Operation			
Power Station Operators	10 **(2 / shift)**	**Technician**	**350**
Maintenance			
Planner	1	B. Eng. (Mech. / Elec.)	450
Assistant planner	1	B. Eng. or Tech (Mech. / Elec.)	300
Generating Set Technicians	**10 (2 / shift)**	**Tech. Mech + Elec**	**300**
Electrical Technicians	3	**Technician - Elec**	**325**
Controls & Instrument Technicians	2	**Technician - C&I**	**350**
General Hands	3	**Semi - skilled**	**250**
Stores	**2**	**Semi - skilled**	**250**
Total Monthly Salary Bill (Power Plant)			**US$13,475**

Table 5.3: Total Monthly Salary Bill (Power Plant)

The staff structure for the gas conditioning plant including the Qarakent water pumping station should be as follows:

Role	**Quantity**	**Education Level**	**Salary (approx.) USD / month**
Management & Administration			
Gas Conditioning Plant Manager	1	B. Eng. (Chem/Mech).	500
Assistant Gas Conditioning Plant Manager	1	B. Eng. (Chem/Mech)	450
Administration & Finance	1	B. Comm.	350
Security	5 (2 / shift)	Unskilled	200
Cleaners, tea lady / man	3	Unskilled	200

Role	Quantity	Education Level	Salary (approx.) USD / month
Gardener/ Bus Driver	1	Unskilled	200
Cooks	1	Unskilled	200
Operation			
Gas treatment operators	10 (2 / shift)	Technician	350
Maintenance			
Planner	1	B. Eng. (Mech. / Elec.)	450
Assistant planner	1	B. Eng. or Tech (Mech. / Elec.)	300
Gas Conditioning Plant Technicians	10 (2 / shift)	Tech. Mech & Chem	300
Electrical Technicians	3	Technician - Elec	325
Controls & Instrument Technicians	2	Technician - C&I	350
General Hands	3	Semi - skilled	250
Stores	2	Semi - skilled	250
Total Monthly Salary Bill (Gas Conditioning plant)			**US$13,475**

Table 5.4: Total Monthly Salary Bill (Gas Conditioning Plant)

5.2.2.2 Manning Levels 30 MWe

There will an interim phase planned for the power station which will consist of about 30 MWe of generation. The power station can run under slightly reduced manning for this initial phase.

Role	Quantity	Education Level	Salary (approx.) USD / month
Management & Administration			
Power Station Manager	1	B. Eng. (Mech. / Elec.)	500
Assistant Power Station Manager / Planner	1	B. Eng. (Mech. / Elec.)	450
Administration & Finance	1	B. Comm.	350
Security	5 (2 / shift)	Unskilled	200
Cleaners, tea lady / man	2	Unskilled	200

Role	Quantity	Education Level	Salary (approx.) USD / month
Gardener/ Bus Driver	1	Unskilled	200
Cooks	1	Unskilled	200
Operation			
Power Station Operators	5 (2 / shift)	Technician	350
Maintenance			
Generating Set Technicians	5 (2 / shift)	Tech. Mech + Elec	300
Electrical Technicians	2	Technician - Elec	325
Controls & Instrument Technicians	2	Technician - C&I	350
General Hands	2	Semi - skilled	250
Stores	2	Semi - skilled	250
Total Monthly Salary Bill (30MWe)			**US$8,700**

Table 5.5: Total Monthly Salary Bill (30 MWe)

Role	Quantity	Education Level	Salary (approx.) USD / month
Management & Administration			
Gas Conditioning Plant Manager	1	B. Eng. (Chem/Mech).	500
Assistant Gas Conditioning Plant Manager	1	B. Eng. (Chem/Mech)	450
Administration & Finance	1	B. Comm.	350
Security	5 (2 / shift)	Unskilled	200
Cleaners, tea lady / man	3	Unskilled	200
Gardener/ Bus Driver	1	Unskilled	200
Cooks	1	Unskilled	200
Operation			
Gas treatment operators	5 (2 / shift)	Technician	350
Maintenance			
Planner	1	B. Eng. (Mech. / Elec.)	450
Assistant planner	1	B. Eng. or Tech (Mech. / Elec.)	300
Gas Conditioning Plant	5 (2 / shift)	Tech. Mech & Chem	300

Role	Quantity	Education Level	Salary (approx.) USD / month
Technicians			
Electrical Technicians	2	Technician - Elec	325
Controls & Instrument Technicians	2	Technician - C&I	350
General Hands	3	Semi - skilled	250
Stores	2	Semi - skilled	250
Total Monthly Salary Bill (Gas Conditioning plant)			**US$9,875**

Table 5.6: Total Monthly Salary Bill (Gas Conditioning Plant)

5.2.2.3 Management and Administration

Power Station Manager/Assistant

The Power Station Manager will have a Degree in either Mechanical or Electrical Engineering and will oversee the management and performance of the Power Station Plant. The person filling this position will ideally have previous experience with the operation and managing of power stations

The position will report directly to a senior member of the Ministry of Energy and Water.

Gas Conditioning Plant Manager and Assistant

The Gas conditioning Plant Manager will have a Degree in Chemical or Process Engineering and will oversee the management and performance of the gas conditioning plant. The position will report directly to Ministry of Mines.

Administration & Finance

An administration role will be created to assist the Power Station Manager with the reporting functions. Ideally, they will have a degree in Commerce or Accounting.

Miscellaneous

There are several lower paid positions that have been allowed for, but will ultimately be determined at the commissioning of the plant. Below is a suggestion only and has been priced in the feasibility study.

Security is obviously of concern. Two security staff will be provided at all times, on a rotating shift. Cleaners will be required for the administration building, and could double as the tea lady / man which are common in Afghan society. Two gardeners will be employed to keep the grounds in presentable condition. Either of these positions may also involve duties as the bus driver, as transport to and from site is generally a responsibility of the employer in Afghanistan. It is also usual for employers in Afghanistan to provide meals for the staff while on site. This will be provided by two cooks who will also perform cleaning duties of the lunchroom and kitchen.

5.2.2.4 Operation

In association with specialist plant maintenance staff with skills in the listed below in section 5.2.2.5, the plant will need to develop a group of Station Operators that take overall control and supervision of the complete plant (gas supply to electrical transmission output) and respond to grid power and electrical supply requirements and gas supply availability. An understanding of operational variations and plant control arrangements during an emergency and black start condition are necessary for this role.

Power Plant Operators

The power plant operators must be capable in and have an understanding of power system supervision, real and reactive power control, generator power output characteristics and limitations, frequency keeping and grid voltage control, manual and automatic synchronization of both individual generators and station output as and when required.

A full understanding of the operational aspects of all plant items and the appropriate actions necessary in abnormal conditions are an essential requirement of this role. Plant operators need to know the plant well and be able to refer any necessary issues to appropriate specialist support staff in a timely manner.

Gas Conditioning Plant Operators

It is expected that the gas conditioning plant will initially have a unique set of operators. The gas conditioning plant operators will have a background in gas or chemical processes, and have either a chemical or process maintenance background.

5.2.2.5 Maintenance

Maintenance Planners

These staff will be responsible for day to day and predictive maintenance planning. Plant outages and worklists will be prepared as will parts ordering for maintenance.
Staff for this role will either be degree qualified or from a maintenance technician background.

Generating Set Technicians

These staff will ideally have stationary engine driving experience and a mechanical trade background. Sea going marine experience would also be acceptable, though this is not likely within Afghanistan. Persons without this experience will need additional training and will not be able to take shift supervisory roles until such operating and maintenance experience is gained. This training should be gained by transferring a number of staff to similar powers stations to get get hands on experience before the Shebergahn power station is commissioned.

Staff will require full training on the Engine Management System such that they can analyse data collected and initiate corrective actions necessary. This training will be provided on site during the initial maintenance period.

Gas Conditioning Plant Technicians

Staff will need to be experienced in the safe operation of the plant supplied and be involved in the commissioning and operation of similar plant. Staff members will need to be capable of gas analysis, monitoring and testing techniques, and testing for corrosion.

The majority of these skills will already be available at site through the operation and maintenance of the existing Gerquduq Gas Processing Plant. The technology selected for the gas sweetening has previously been used on site. Additional on site training will be required on the glycol system, which is new to Afghanistan, but not a huge leap in understanding to people already familiar with gas processing plant. More specific training will be required on the modern controls systems that will be provided with the plant.

Electrical Technicians

There will need to be a team of electrical staff that can service and operate the full range of electrical plant at both the Power Station and Gas Conditioning Plant. The work will cover:

1. **Electrical Connections** – including maintenance and safe operation of:
    - 11kV Switchgear, HV and MV transformers, cable connections and metering and control equipment. Transformer oil maintenance and testing- filtering and reconditioning.
    - 110kV Switchgear, isolation and earthing and line interconnections.
    - 11kV Generators in parallel mode and as an “islanded generation” source, an understanding of frequency keeping and electrical synchronization at both unit and station level.
    - Black start and emergency generation units
    - Auxiliary plant items including motors, fans, lighting and auxiliary supplies. Ventilation units and air handling equipment. DC power supplies and battery units. Air compressors and air handling control.

- Earthing maintenance and testing.

2. **Electrical Protection and Testing**
   Staff with electrical technician capability will be needed to undertake testing, repair, calibration and recommissioning work as part of the ongoing plant (generator and electrical connection) maintenance and operational supervision requirements. This role may be combined with other aspects of the plant staffing. Registered electrical technicians with power and transmission system digital and electro-mechanical relay experience and capability will be essential.

   Knowledge of safe working practices and High Voltage Testing in a hazardous electrical environment is necessary for this role.

3. **Engine / Generator Management System and Generator operating characteristics**
   Staff with full training on the Engine Management System provided and the technical ability to analyse data collected and initiate corrective actions necessary. The electrical and mechanical (engine driving) staff may be amalgamated for this aspect as the electrical aspects of the Generator management will be of a minor nature most of the time.

Control & Instrumentation Technicians

The modern control systems proposed to run the power station will be new to the Sheberghan region, and probably the whole of Afghanistan. Training will be required to bring staff up to the required levels of understanding.

The control room will be the focal point of the several individual controller systems that all feed into the common site LAN based data highway. The power station staff will need suitable experience in data and computer systems as provided to support the plant operators and maintenance engineering staff.

Staff will need to be able to detect and repair faults and abnormal operation of the installed systems and be familiar with all the individual control systems throughout the site and at remote access points as necessary.

Telephone, modem and router engineering technologies will be needed in addition to some recognised Computer Systems Engineering Certification that covers the systems provided in terms of the Supply contract.

Staff that undertake this work will need to be trained and involved at an early stage of the commissioning process or be provided on a continuous expatriate basis by an agreed contractor.

To cater for staff continuity, more than one Control Room Systems technician will be needed. This will be a key role in the Power Station Staff. It would be good to train some of the Electrical

Maintenance and Power plant operating staff in the basic control room systems to confirm suitable staff continuity and understanding.

General Hands and Stores

As well as maintaining the power station and gas conditioning plant, there will be a requirement for general maintenance. This includes:

- Water pumping station, delivery and treating
- Storm water and sewage disposal
- Cleaning and decontamination
- Civil Maintenance of roading & fencing
- Ground Maintenance and rubbish disposal
- Overhaul Support Staff

These works will be performed by the general hands under the supervision of one of the maintenance supervisors. The general hands are expected to be semi-skill staff with some industrial experience.

The Stores Warehouse will also require semi-skilled staff to operate it. Ideally these staff will have worked in a stores environment in the past; otherwise they will need to be trained at site in good stores keeping practices, and in the use and operation of computers for the inventory tracking.

5.2.3 Training Requirements & Timing

To ensure that training occurs in a orderly fashion it is envisaged that a number of personnel would travel to similar plants elsewhere in the world. A budget should be made available for this within the EPC contracts. Typically this would involve 12 man months of offshore training total for each of the power station and the gas conditioning plant. An allowance in the capital estimates has been made for the EPC contractor to provide this training.

General

All general staff will require site induction including on:

- Hazard identification
- H_2S gas
- Chemical spills
- Fires
- Emergency Evacuation
- Security and safety

All maintenance and engineering staff will require site induction, plus further training on:

- Hot work
- Confined space
- HV equipment
- Pressurised hot water systems
- Glycol and Amine
- Computers
- Computer Maintenance Management System provided

Plant Operators

Plant operators will need to be trained in all aspects of the plant installed. This will best be achieved by specialist attention to individual items as necessary for each person both at site and for a set of operators at the manufacturer's works site and during the six year supervision period.

The allocation of training will depend on the background of each appointee and be judged across the following matrix

- Engine Driving Experience-including emergency plant operation and exhaust emission control
- Generator Operation Experience and power plant scheduling and management
- HV Switchyard Operation and Management Experience-operational procedures and safety management.
- Gas Treatment Plant and Gas reticulation Operation and Management Experience

Engine Drivers and Maintenance persons
To be recruited from a background in mechanical fitting with possible marine or stationary engine / steam raising experience.

Gas Treatment Plant Operators
Training at site during first two years of plant supervision by the gas conditioning contractor

5.2.4 Tools and Equipment

The following workshop tools and equipment are required and have been allowed for in the cost estimates:

- Vehicles
  - Forklift 4 tonne capacity
  - Mobile Crane Truck (4WD all terrain capable) with 2 tonne crane and 2 tonne deck
  - Tractor with front loading bucket

- Workshop machines
  - Radial Drill

- Drill press 25mm cap
- Milling Machine
- Hydraulic Press

- Portable Electric & Pneumatic Powered Hand tools
  - Drills
  - Grinders

- Welding Equipment
  - Manual Arc Welding
  - MIG/TIG Welder plant
  - LPG flame plant with selection of burners
  - Masks, Goggles, Gloves, Consumables

- Lifting Equipment
  - Engine rigging/lifting tools.
  - Block and tackle with ropes.
  - Jig tools and specialist boring and facing repair machines.
  - Hydraulic Rams and set of tools for recommended requirements
  - Full sets of hand tools including rigging and hauling items for general workshop use

- General Handling Equipment
  - Pipe fitting and holding devices – general requirements
  - Work benches
  - Vice
  - Wheel pulls
  - Clamps

- Portable Equipment
  - Generators 2x 4kw for tools and emergency lighting
  - Pumps as required
  - Fans and blowers
  - LPG fired hot air blower/heater.

- Engine Test and Monitoring equipment
  - Endoscope- or similar inspection scope with Digital Camera
  - Acoustic monitor – engine performance monitor
  - Portable Flue gas Analyser and leakage gas detector
  - Portable Gas Detectors
  - Portable vibration recording and analysis Unit

- Electrical and instrument Test equipment
  - Relay Test Injection Set

- Electrical Instrument Calibration Set – standard capability
- Pressure Gauge and Transducer Test / Calibration Set– standard capability
- 15 kV Insulation test set.
- HV Test Set AC VLF /DC as necessary and appropriate
- Low resistance Test Set – contact /continuity tester
- Portable Ammeters and voltmeters-various for each technician
- Earth Testing Set
- HV Test probes and HV phasing test set
- Insulation oil test set
- Transformer oil analysis unit
- Portable data logger/disturbance recorder
- PC with specialist relay software as necessary to provide diagnostic services for in-service relays.

- Computer Support equipment
  - Data analyzer
  - Data logger-system analyzer
  - Signal analyzer
  - Specialist Engine Management Programmer Unit if recommended or provided
  - Network analysis software and additional PC for analysis and diagnostics
  - Any other specialist tools recommended by specific supplier to service plant provided

- Operational Support Equipment
  - Electrical earthing equipment
  - Locking and isolation devices – as necessary
  - Portable radio communications devices- personal hands free communications included in noise protection if necessary
  - Noise protection for all staff
  - Toilet and health protection within plant- separate staff areas for facilities

- Personal protection equipment for all aspects of plant
  - Gas – Fuel and engine exhaust
  - Heat- engine and steam raising-exhaust /turbo
  - Noise- earmuffs –noise defenders
  - Electrical – gloves and insulated covers
  - Compressed air – face shield and covers
  - Security
  - Weather Environment- clothing and protection from elements
  - Falls and slips- walkways and stairs

- Chemical laboratory equipment
  - Hand held gas analysers

- Manufacturers Special Tools as recommended by power plant contractor
- Manufacturers Special Tools as recommended by gas conditioning contractor

5.3 Cost Estimates

5.3.1 Gas Conditioning Plant Estimates

Gas conditioning plant cost estimates are based on enquires with specialist North American gas treatment plant vendors and in-house price estimating. It is anticipated that the plant will be manufactured and assembled into skid mounted modules prior to shipment to Afghanistan to reduce time on site, and lower the overall cost of the plant.

Gas produced by the conditioning plant will have a Higher heating Value of approximately 38.09MJ/m^3 and a Lower Heating Value of 34.31MJ/m^3. These figures will need to be confirmed when more accurate gas analysis is obtained.

The entire gas conditioning plant cost estimate, from Gerquduq gas gathering manifold to power station flange, is summarised in the appendix S.

For financial modelling purposes, figures for gas consumption of the plant should be 600 kWt for the tail gas incinerator, and 250 kWt for the Glycol regeneration. Electrical parasitic load on the plant will be approximately 400kWe.

5.3.2 Power Plant Estimates

Power plant cost estimates are based on enquires with large scale reciprocating engine vendors. The engine generator sets will be delivered to site as a skid mounted unit, and installed in a purpose built building at site. All of the works required for a power house, including administration building, workshop and stores, will be provided.

The entire power plant cost estimate, from power station gas flange to HV switchyard, is per the attached spreadsheet.

For financial modelling purposes, the Caterpillar G16CM34 units are a good conservative base case. They have a net electrical efficiency of 43.6%, based on site conditions, no tolerance on the fuel, Cos $\varphi = 0.8$, and considering pumps. Parasitic load is 2% of electrical output. For 16 units, the net plant rating will be 97.64MW at the step-up transformers, and fuel consumption will be (LHV) 228.56 MW, equating to 24,000 nm^3/hr. Depending on the analysis of the fuel, this is approximately (HHV) 251.42 MW.

5.3.3 Electrical Interconnection

The electrical cost estimates for transmission and distribution equipment were derived from a combination of the following:

- ABB prices tendered in 2004 to build high voltage substation in Afghanistan.
- Power Sector Master Plan- Appendix B - Transmission System prepared by Norconsult for Afghanistan in October 2004
- Power generation electrical plant costs were based on information held in the consultant's data base for similar generating plant in developing countries.

The cost of repairing the 20km of damaged transmission line between Sheberghan and Mazar-e-Sharif has not been included in the costing as this is likely to be part of an alternative funded project. The cost of 20 km of 110 kV double circuit transmission line is expected to be in the order of $2,000,000 USD.

5.3.4 Civil Works

The civil works cost estimates and corresponding breakdowns for the power plant are based on reference costs for scaling from other power plants. These include larger Combined Cycle power stations at locations in Stratford and Otahuhu, New Zealand, Swanbank , Queensland and Tocpilla , Chile. These were compared against prices used for 2 off 6 MWe Diesel engine power plants typically installed in the Pacific Islands eg Fiji and Marshall Islands. The reference projects data provides a guide on the average percentage of total EPC cost that is spent on civil engineering for plants of varying sizes, which is approximately 5-10%.

With open cycle technology selection, the mechanical cost component reduces the EPC turnout cost by the value of the HRSG and steam turbine. An allowance is made for this by adjusting the civil component to approximately 10% of the EPC cost using the gas engine pricing for this project. The outline civil works described in the budgetary proposal for a 127MW simple cycle power plant prepared by ENKA Construction and Industry Co. Ltd, is consistent with the scope described in this project. The civil works value calculated from the reference projects is consistent with the percentage of the EPC budgetary estimate provided by ENKA and adjusted for 100MW output.

The civil works costs for the gas processing plant are based on the power plant civil engineering costs, adjusted for the smaller plot area, lesser number of process plant items requiring support, and minimal building requirements. This information was compared against typical costs for a gas processing plant in New Zealand for which we carry out insurance valuations. The Civil costs for this plant is about 8% of the plant direct costs (ie material, equipment and construction)

A provisional sum allowance is made for the cost of highway and bridge investigation and strengthening.

5.3.5 Operational Fuel Estimates

Fuel consumption based on the Caterpillar G16CM34 is approximately (HHV) 251.42 MW. This equates to 6.88 m^3/s (24,768 NM3/hr) of conditioned gas at 100% baseload. The technology selection spreadsheet has annual gas consumption totals.

5.3.6 Non-Fuel Operation & Maintenance Estimates

5.3.6.1 Operation and Maintenance Estimates

Staff remuneration will vary according to skills and experience. Accommodation and transport has not been included in the total cost included in 3.2. But can be covered in the overall estimate contingency.

Maintenance estimates are included in the Technology Selection spreadsheet.

Assumptions made for O&M are

- Plant life is 20 years
- Costs are year 2005 US$
- Annual capacity factor is 94.7%
- Plant is operated on base load
- Maintenance costs estimates are from norms from general engine vendors and are in fact more than that promoted by the engine vendors. Typically the vendors figures do not include BOP. With reciprocating engines the BOP costs are minimal.
- Rental costs are minimised as most equipment will need to be bought specifically for this project and will be used for ongoing Operations and Maintenance.

Availability figures have been taken from the North American Electric Reliability Council (NERC) database of actual power plant availability across Northern America for 1999-2003 revised 2005. refer http://www.nerc.com/~gads/ . As no data is shown for gas engines we have used the figures for diesel engine power stations for which there 381 unit years of data available. In the initial years of operation the availability will be much higher than this and for example the Plains end 111 MWe gas fired power station has been achieving greater than 99.4% availability for the first year of operation. refer Renewable energy fuels and energy conference April 6 2004 http://www.cibo.org/industenergy/2004/c4.pdf With the correct training of local staff, similar availability figures can be achieved at Sheberghan.

5.3.6.2 Workshop and Tools Estimates

Ongoing maintenance of workshop and tools is estimated at 10% of original Capital expenses.

5.3.6.3 Training Estimates

The majority of training will be by technology transfer during the first years of operation by the equipment suppliers. This has been included in the capital cost spreadsheet under owners costs..

Additional training will be required, depending on the experience of the employed staff. This is particularly so for the controls operators. Some staff will need overseas training at similar operating power stations.

5.3.7 Indirect Costs

5.3.7.1 Engineering

The detailed engineering of the individual components will be placed back on equipment suppliers. The independent project management will serve to oversee the design to ensure compatibility with the site.

5.3.7.2 Project Management

A breakdown of the project management is provided on the cost control spreadsheet. It equates to approximately 5% of the project value, which is typical for this type of project.

Tender Finalisation, Review & Letting

Upon approval of the project by USAID, the present Feasibility Study Project will have finished, and additional engineering time will be required to progress the project. The tender documents will need to be finalised, which will require a site visit by the key team members, and time back in the home office to complete and issue the documents. A tender evaluation period will include evaluation, negotiation and contract letting.

Site Supervision

Site supervision will be required to ensure project deliverables are on schedule, new staff receive the appropriate training prior to plant operation, and relevant permits and interfaces with the GoA are met. Expatriate engineers will be positioned on site for the duration of the project. Roles include Mechanical Power Plant, Mechanical Gas Conditioning, Electrical, Controls, and Civil / Structural. Input will also be required from process engineers and laboratory technicians.

Site conditions will be difficult for expatriates due to the remote location and non-existent facilities. A rotation for long-term staff is likely to be 4-8 weeks on, 2 weeks off. Staff will work 7 days a week while on site, and will be flown back to their base or alternatively to Kabul where an expatriate contingency resides for the 2 weeks off.

Commissioning, start-up and testing

Additional support will be provided during the commissioning of the project. Positions will be made for Mechanical Power Plant, Mechanical Gas Conditioning, Electrical and Controls engineers. An overall commissioning coordinator is required who will run and manage the commissioning. This will be provided by the EPC contractor for the main contract or if the contract is split up by each individual contract.

5.3.7.3 Owners Costs

Owners costs have been taken at 1.5% of the project value. This is typical in this type of project.

Owners costs includes any requirement for a bankers engineer, inspections of other plant, inspections of equipment during fabrication, legal costs, any specialist overseas training of staff, etc

5.3.7.4 Insurance

Insurance costs have been set at 2.0% of the project value. This is slightly high for this type of project, but considered appropriate when taking into risk associated with projects in Afghanistan.

5.3.7.5 Construction interest

Construction interest is the interest on the borrowed money over the duration of the construction period. In reality, the loan will be drawn down as the money is needed, with some mobilisation advances required up front, and other retentions not being paid until the end of the reliability period. A good approximation is to calculate the interest based on half the capital cost, over the duration of the construction through to commissioning.

5.3.7.6 Contingency

A contingency of 20% has been added to the overall project cost to cater for unforeseen events. This is slightly high for this type of project, but considered appropriate when taking into consideration the instability and security problems of Afghanistan, and the remoteness of the site.

5.4 Battery Limits

The following items are to be provided by others and have not been included in this study:

- Gas collection system. It has been assumed that the requisite gas will be provided by others under an ADB project and be delivered to the Gerquduq gas gathering manifold.
- Route survey for delivery of equipment
- Geotechnical testing of the site, though preliminary testing should be performed before issuing tenders if time permits
- Additional boreholes at Qarakent.
- Transmission system. This study has considered power delivery to the existing Sheberghan sub station at 110kV. Transmission from this point, including remedial works on the Sheberghan to Mazar-e-Sharif line, the upgrade to 220kV including inter-bus transformers, and the 220kV lines to Turkmenistan and Uzbekistan, will be provided by others.

5.5 Project Development

5.5.1 Action Items Before Tender Issue

The following information should be provided before an invitation to tender is issued:

1. Gas analysis of composition, pressure, temperature and reserve.
2. Water analysis of Qarakent borehole.
3. Meteorological information for relative humidity, extreme maximum and minimum temperatures.
4. Geotechnical survey (preliminary) of the preferred sites
5. Preparation of site specific seismic spectra
6. Electrical load figures for the Sheberghan and Mazar-e-Sharif sections of the Northern Transmission Line

This information is required before tenderers can price equipment, and is best provided in the tender documents rather than having the tenderers each perform their own tests.

Maunsell understand that the Gas Analysis is currently being performed by Tom O'Connor.

Water analysis of Qarakent should be relatively easy to obtain now that a new testing laboratory has been established in Kabul. The Laboratory of the Institute of Survey and Projects – Ministry of Energy of Water, is located in the Department of Environment Building. The facility is new, and staff are presently being trained on the equipment.

Meteorological data has been requested from Mr Serge Verniau at the FAO in Kabul. It is likely that the data on extreme temperatures will be forthcoming by the end of May 2005, but doubtful that any data exists on humidity. To obtain humidity data, it is strongly recommended that a couple of wet-bulb sling psychrometers be purchased (at minimal cost) and sent to a responsible engineer at the Gerquduq Gas Processing Facility Complex immediately. Wet and dry bulb temperatures should be taken morning, noon and evening every day. By the time that tender documents are let, there will be 3 – 4 months of information to assist suppliers in sizing the fin fan radiators. By the time the design is finished, there will be approximately 8 months of information to confirm sizes. By the time the installation is complete, there will be over one year's worth of data that will help set up the flow rate control, and rectify any small problems with the design before the plant becomes operational.

Tenderers will also benefit from a preliminary geotechnical survey of the preferred site. It will be the responsibility of the successful tenderer to reconfirm the preliminary information at contract award.

Electrical loads will determine the phasing of this project. This will be confirmed in due course.

5.5.2 Development and Construction Schedule

A program for the development and construction of the 100MW power station is provided in Appendix Q.
The program is constrained by the following events:

1. Rehabilitation of the existing 110kV line between Sheberghan and Mazar-e-Sharif.
2. Construction of the new transmission line connecting Mazar-e-Sharif to Kabul
3. Development of the existing gas reserves

It is intended to phase the project to meet these milestones. Generation capacity will depend greatly on the load (items 1 & 2 above), and on the availability of gas (item 3).

At this early stage, it is envisaged that up to 10MW can be installed to meet the local Sheberghan northern line estimated demand. An additional load up to 20MW can be installed to meet the remaining northern transmission line estimated demand once the missing 20km section is rehabilitated. This is expected to be finished before the completion of Phase I.

The remaining 70MW (est.) can be installed when the new transmission line to Kabul is finished and will form Phase II of the power generation project. At this moment in time it is impossible to plan for this phase as it is not know when the new transmission line will be completed. Current estimates are for sometime in 2007- 2008 however as there are many parties involved this is not certain.
It is assumed that the gas will be available as required. However, this assumption needs to be confirmed with the ADB project team performing the gas rehabilitation.

.

6 Environmental and Sociological Impact Statement

6.1 Introduction

The overall goal of the project is to expand the availability of electric power in the Balkh Region of Northern Afghanistan. Currently it is planned that the region will be supplied by import power alone from Uzbekistan until an alternative/additional supply can be developed. The Government of Afghanistan (GoA) feels strongly that there is a high priority need to develop its own electric power resources and supplement these resources with imports when needed.

In order to develop its own resources the GoA requires clarity concerning domestic resource options to improve Afghanistan's basis for negotiating future import contracts and to improve import strategies. The GOA has indicated that priority must be given to the performance of studies of key supply projects that can be implemented in the short to mid-term (2006-2007).

Among the wealth of natural indigenous resources in Afghanistan available for potential use in the energy sector are the gas fields within the Balkh Region around the City of Sheberghan. Within the Master Plan of the Ministry of Water and Power, developed with the assistance of Norconsult (Power Sector Master Plan ((AFG/03170)) Norconsult Norplan), the feasibility of developing a thermal power facility in Sheberghan was identified as a high priority study

This report presents the findings of the environmental and sociological impact studies undertaken in conjunction with the Feasibility Study for the Development of a Gas-fired Thermal Power Facility in Sheberghan. This report specifically assesses the environmental and sociological impacts associated with the proposed site and technology configuration for the Sheberghan power plant and associated gas conditioning facilities. The report has been prepared in accordance with World Bank Environmental Assessment Guidelines.

6.2 Policy Legal and Administrative Framework

6.2.1 Environmental Legislation and Guidelines

There is no legal permitting process in Afghanistan governing the development and operation of a fossil-fired power generation plant. The environmental legal system (as with the overall legal system) in Afghanistan is at an early stage of development. No environmental law is yet in place covering control of air, water and soil pollution, overall environmental planning and EIA etc. The Independent Department of Environment (IDOE) is the Government agency responsible for the environment. The IDOE operates at a ministry level under the Minister for the Environment. With technical assistance from the United Nations Environment Programme (UNEP) and the Asian Development Bank, the IDOE has prepared a Draft Environmental Protection Act which is currently being translated into Dari for circulation and comment from Government departments. The proposed law covers interalia, institutional arrangements, environmental management principles, integrated pollution control, natural resource conservation, development planning (including environmental impact assessment) and compliance and enforcement. Once passed into law, the Act will provide an overall environmental framework law from which environmental regulations will be established in a staged manner.

Until such time as the Environmental Protection Act is passed into law the arrangements for EIA in particular remain the domain of donor organisations. In the interim period the IDOE is taking steps to develop formal EIA procedures for Afghanistan through the preparation of a series of guidelines. Seven guidelines are currently proposed of which Guideline No. 1 - “Screening of Projects” has been completed. The guidelines will form the basis of an administrative process which can be adopted by the Transitional Islamic State of Afghanistan (TISA). Agencies involved in infrastructure development will be encouraged, through the IDOE, to adopt the environmental guidelines as best practice even though such guidelines cannot be enforced without relevant legislation.

6.2.2 International Conventions and Agreements

Afghanistan is a signatory country to the following international conventions of relevance for the environment and power development:

- World Heritage Convention
- Convention on Biological Diversity
- Climate Change
- Basel Convention.

There are numerous environmental and natural resources issues in Afghanistan that have international aspects and therefore would require a trans-boundary approach to management. Examples include water sharing in the Amudarya and Helmand Basins and wetland protection in the Sistan Basin. Some international agreements with neighbouring countries exist for these issues.

6.2.3 World Bank Environmental Guidelines

In the absence of Government environmental legislation this EIA adopts the environmental impact assessment guidelines of the World Bank. The relevant guidelines include:

- Guidelines for Environmental Assessment of Energy and Industry Projects[5]
- ambient air quality guidelines to be used in undertaking an environmental assessment in the absence of local ambient standards[6].and
- air emissions and effluent discharge requirements for thermal power plants[7].

The World Bank ambient air quality guidelines, emission and discharge requirements for thermal power plants are presented in Tables 6.1, 6.2, 6.3 and 6.4 below:

($\mu g/m^3$)

Pollutant	24-hour average	Annual average
PM_{10}	150	50
TSP	230	80
Nitrogen dioxide	150	100
Sulphur dioxide	150	80

Table 6.1: Ambient Air Quality Guidelines (Maximum Values)

(mg/Nm^3, unless otherwise specified)

PM	SO_x	NO_x
50	0.2 tpd/MWe (to 500MWe) 0.1 tpd/MWe (incr. over 500 MWe) Not to exceed 2,000 mg/Nm^3 in flue gases Not to exceed 500 tpd	2,000 mg/Nm^3 (or 13 g/kWh at 15% oxygen)[8]

Table 6.2: Air Emission Requirements for Gas-fired Thermal Power Plants: Parameters and Maximum Values

[5] World Bank, 1998. *Environmental Assessment Sourcebook* 3 volumes Washington D.C. IBRD (In particular, Volume III Guideline for Environmental Assessment of Energy and Industry Projects).

[6] World Bank 1999. *Pollution Prevention and Abatement Handbook 1998 Toward Cleaner Production* Washington D.C. IBRD. p424.

[7] Ibid. pp193-200.

[8] For engine driven power plants for funding applications received after 1 July 2000 as per ibid p418.

(mg/l, except pH and as otherwise specified)

pH	TSS	O&G	Cl	Temp increase	Comments
6-9	50	10	Total residual: 0.2	≤ 3°C	Chlorine shocking: maximum value is 2 mg/l for up to 2hour, not to be repeated more frequently than once in 24 hours, with a 24-hour average of 0.2 mg/l

Table 6.3: Effluent Discharge Requirements for Thermal Power Plants: Parameters and Maximum Values

(mg/l)

Cr	Cu	Fe	Zn
0.5	0.5	1	1

Table 6.4: Effluent Discharge Requirements for Thermal Power Plants: Parameters and Maximum Values, - Metals

6.3 Project Description

6.3.1 Power Station Technology

The Sheberghan gas fired power station will be located within the site of the existing but redundant Gerquduq Gas Processing plant. Gas will be supplied to the power plant exclusively from the Gerquduq Jurassic gas fields with emergency gas supply available from the nearby Yatimtaq and Khoja Gogerdak Cretaceous gas fields. Available data indicates that the Gerquduq Jurassic gas field has sufficient reserves to power the proposed 100 MW power station throughout its design life. Gerquduq Jurassic gas has a hydrogen sulphide (H_2S) content of 0.18 to 0.71%[9] and as such is classified as sour gas on account of the typical "rotten egg" smell associated with such concentrations H_2S. Yatimtaq and Khoja Gogerdak Cretaceous gas has zero percent H_2S content and is classified as sweet gas.

Power generation will be provided by four stroke lean burn Reciprocating Gas Engines. Reciprocating gas engines are derived from the technology as used in everyday automobiles. The gas is combusted in a cylinder, forcing a piston down. This piston is linked to a crankshaft, and in power generation applications the crank shaft drives a generator to produce electricity. There are usually a number of cylinder-pistons linked to the crankshaft, up to 20 in gas fired engines and usually in a "V" arrangement. The advantage of the lean burn technology is that combustion temperatures are lowered, resulting in lower nitrogen oxides (NOx) emissions.

The advantages of the reciprocating gas engine technology used for 50-100MWe base-load power station operation are:

11. High open cycle efficiencies (up to 46.5%)
12. Allows modular installation
13. Ability to stop and start quickly without adverse mechanical issues. (ideal for islanded loads)
14. Higher resilience to load fluctuations due to larger rotating mass (than turbines)
15. Tripping of one unit does not have a major effect on the overall output of the station.
16. Negligible water consumption.
17. Requires less dewpoint suppression that turbine options.
18. No de-rating of output due to temperature until 35 deg C
19. No requirement for gas compression.
20. A good understanding of the technology around the world.
21. Major maintenance outages are shorter in duration
22. Cost effective water based combined heat and power opportunities

[9] This range was provided from analysis of Soviet data (1982) along with data obtained from United States Geological Survey (2002) as presented in the Sheberghan Feasibility Study Upstream Gas Supply: Availability, Quality and Required Work, Draft Final Report 2005 prepared for AEAI by Tom O'Connor.

Disadvantages include:

1. Heavier and larger units for the same generation capacity.
2. Slightly higher operation and maintenance costs
3. The potential for efficiency improvements due to combined cycle are relatively small due to the lower exhaust temperatures.

Large gas reciprocating engines are available in unit sizes up to 9.0MWe for single fuel firing. Thus for the proposed 100MW power station, a series of a nominal 12 units will be phased into commission. A large number of small units also allows for better phasing of generation capacity considering the unknowns at the Sheberghan site in terms of electrical load and gas availability.

6.3.2 Gas Conditioning System

Natural gas as required by power station mechanical drives is much different from the natural gas that is brought from underground up to the well head. Raw natural gas commonly exists in mixtures with other hydrocarbons principally ethane, propane, butane and pentane. In addition, raw natural gas contains water vapour, hydrogen sulphide carbon dioxide, helium and other compounds. Conditioning of the natural gas will be necessary before its use in the power station.

Conditioning of natural gas involves four main processes to remove the various impurities:

1. Oil and condensate removal
2. Separation of Natural Gas Liquids
3. H_2S Removal
4. H_2O Removal

6.3.2.1 Oil and Condensate Removal

Oil and condensate will be removed using a simple knock-out vessel (or two-phase separator). The expansion of the gas into a larger vessel causes the condensate to drop out of the gas. Gravity then separates the liquid and gas streams. This simple method is the only remaining gas conditioning process still in use at the Gerquduq gas conditioning plant and is considered as an appropriate step for the new gas conditioning plant.

6.3.2.2 Separation of Natural Gas Liquids

Raw Natural gas coming directly from a well may contain natural gas liquids (NGLs) that in most instances have a higher value as separate products, making it economical to remove them from the gas stream. NGL’s have a much higher calorific value per unit volume than as a gas. This can create a safety and operational problem, especially during engine start-up when the engine is cold.

There are two basic steps to the treatment of natural gas liquids in the natural gas stream. First, the liquids must be extracted from the natural gas. Second, these natural gas liquids must be separated themselves, down to their base components.

At Sheberghan the gas analysis indicates that the volume of NGLs in the gas stream is small. The Gerquduq analysis shows 1.1% Ethane, 0.14% Propane, and negligible hydrocarbons heavier than this. As there is no sophisticated infrastructure for extraction and storage of these NGL's it would appear that it would not be economic to plan for their extraction at this stage. There does not appear to be NGL separation at the existing Gerquduq or Khoja Gogerdak sites. Once the power plant is installed and operational, further gas sampling and testing can be completed and an evaluation of the value of NGLs can be made. The plant layout should consider the potential future allowance for targeted NGL extraction, but no allowance has been made in the preliminary engineering or cost estimates.

6.3.2.3 Sulphur (H_2S) Removal

Sour gas is undesirable because the H_2S it contains can be extremely harmful and even lethal to breathe. Sour gas can also be extremely corrosive. The process for removing hydrogen sulphide from sour gas is commonly referred to as 'sweetening' the gas and the waste H_2S gas needs to be safely disposed of.

As noted above, available data indicates that the Gerquduq Jurassic gas is sour containing 0.18 to 0.71% H_2S. Gas engines require H_2S levels below 0.5% and ideally below 0.05%. H_2S will be removed through the Amine Process whereby amine solutions are used to remove H_2S. The Amine process is a proven technology and used in 95 percent of U.S. gas sweetening operations[10]. The main advantages of the process is that it is robust, proven technology able to function over a wide range of operating conditions (flow rate, H_2S loads etc). There are also existing amine towers at Sheberghan, so the local technicians have a good understanding of the technology. A simple process flow for the amine process is shown in figure 6.1, below.

[10] US Natural Gas Supply Association www.naturalgas.org

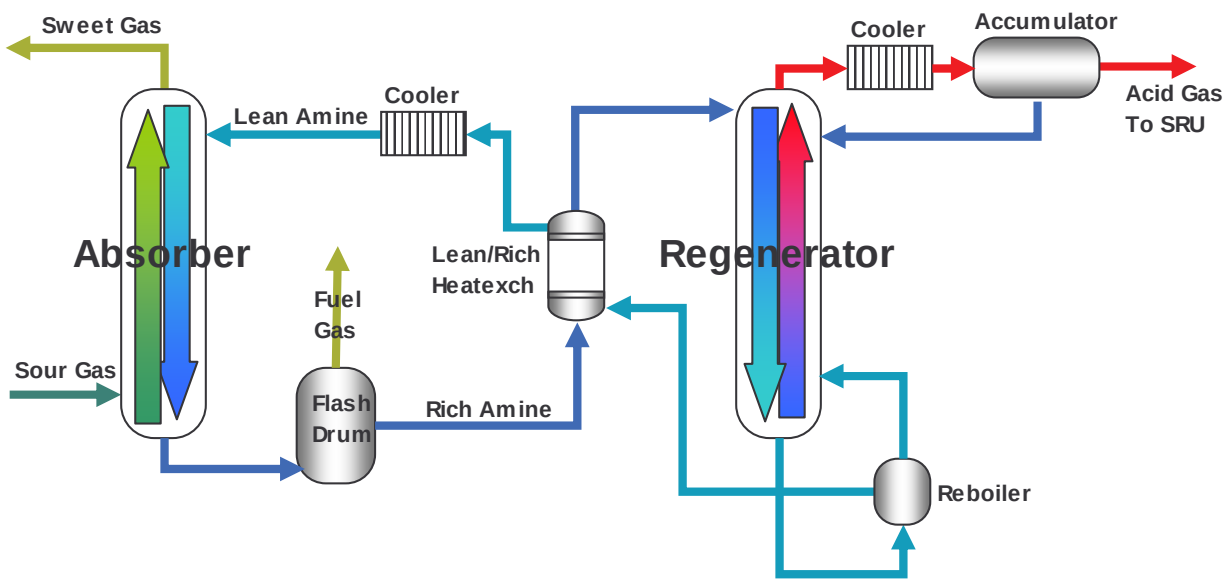

Figure 6.1: Amine Scrubbing Process Flow Diagram

The sour gas is passed through a *contact tower*, which contains the amine solution. This solution has an affinity for H_2S and CO_2, and on contact with the molecules in the sour gas stream, absorbs them. The most common amine solutions used are monoethanolamine (MEA), diethanolamine (DEA) and Methyldiethanolamine (MDEA). These amine solutions absorb H_2S and CO_2 in a chemical reaction. There are many other solutions used for the removal of these two components, e.g. for different inlet concentrations or for more selective removal of one or the other component, and the detailed engineering will determine the most efficient solution. The treated gas stream is virtually free of H_2S and thus loses its "sour" gas status.

The amine solution used can be regenerated (that is, the H_2S and CO_2 are removed), allowing it to be reused to treat more sour gas. This is performed by heating the amine with a natural gas fired heater, or through heat exchangers using steam or hot water at 120 deg C. The regenerated amine solution is then sent back to the contact tower and continuously circulated in this way.

Modern amines are able to selectively remove specific compounds, such as H_2S whilst leaving most of the CO_2 in the gas. The CO_2 is an inert gas and does not affect the combustion process other than to reduce the calorific value of the gas. The gas turbines and reciprocating engines will not suffer de-rating with methane numbers above 80. The available data indicates relatively high methane content, so as long as the gas is kept free of water to prevent acid formation, CO_2 removal is not a priority. The Gerquduq gas has high CO_2 content, so an amine solution targeted for H_2S is recommended.

6.3.2.4 Water (H_20) Removal

Power generation plants have operational and maintenance problems if there even small amounts of water in the gas stream, so it is necessary to remove the water. Water removal is also a requirement for the pipeline transport of the gas to industrial, commercial and residential users. Water in the gas can combine with stray molecules to produce hydrates, a solid that can restrict gas flows. In addition, water in the presence of H_2S or CO_2 will form acids that will attack fuel lines and components. For both gas engines and gas turbines, dew point suppression (i.e. re-heat) at the fuel gas manifold is required. Gas turbines require a higher inlet pressure so require a higher level of dehydration than the reciprocating gas engines.

Most of the free water associated with extracted natural gas is removed by the simple knock-out vessels at or near the wellhead. However, the removal of the water vapour that exists in solution in natural gas requires a more complex treatment. This treatment consists of 'dehydrating' the natural gas, which usually involves one of two processes: either absorption, or adsorption.

Absorption occurs when the water vapour is taken out by a dehydrating agent. Adsorption occurs when the water vapour is condensed and collected on the surface.

6.3.2.5 Glycol Dehydration

A common form of absorption dehydration uses Glycol. The sweetened gas, which is saturated with water, will flow through the absorber from bottom to top and will be brought into contact with glycol, which flows in a counter stream from top to bottom. The gases will either bubble through trays filled with glycol or will come into contact with the glycol at the surface of metal bodies filled in that column. The rich glycol will be heated up via a heat exchanger and enter the regenerator, which mainly consists of a distillation column with a condenser on the top and a reboiler at the bottom. The absorbed water evaporates in the column and the reboiler and leaves the column at the top, while the glycol is ‘washed’ by the reflux of the condenser and leaves the column at the bottom at the desired concentration. This is the lean glycol that is circulated back to the absorber.

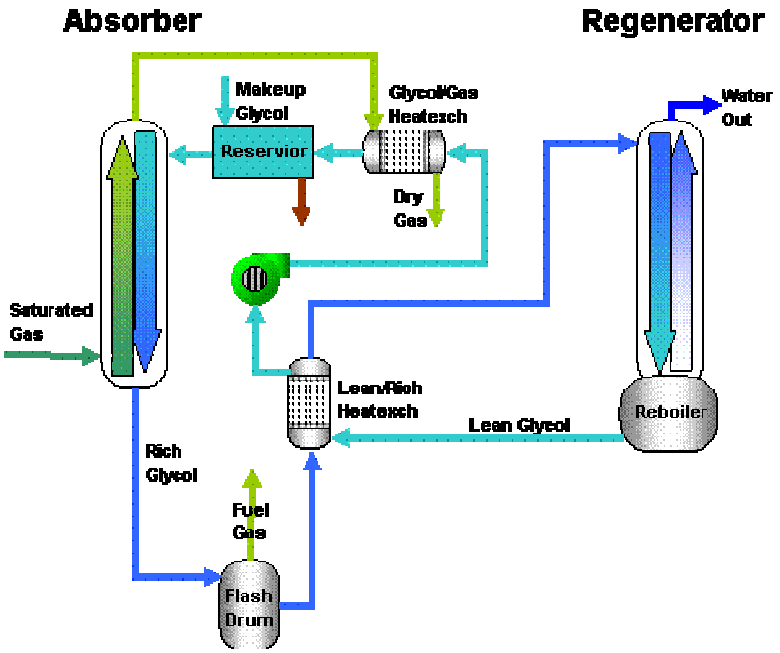

Figure 6.2: Glycol Dehydration Process Flow Schematic

The glycol solution occasionally carries with it small amounts of methane and other compounds found in the wet gas. In the past, this methane was simply vented out of the boiler. In addition to losing a portion of the natural gas that was extracted, this venting contributes to air pollution and the greenhouse effect. In order to decrease the amount of methane and other compounds that are lost, flash tank separator-condensers will be installed to remove these compounds before the glycol solution reaches the boiler. Essentially, a flash tank separator consists of a device that reduces the pressure of the glycol solution stream, allowing the methane and other hydrocarbons to vaporize ('flash'). The glycol solution then travels to the boiler, which will also be fitted with air or water cooled condensers, which serve to capture any remaining organic compounds that may remain in the glycol solution. These systems have been shown to recover 90 to 99 percent of methane that would otherwise be flared into the atmosphere.

6.3.3 Project Implementation Arrangements

The project will be implemented through the selection by USAID/GoA of a contractor to Engineer, Procure and Construct (EPC) and Operate and Maintain (O&M) the facility, inclusive of spare parts, through to the first major overhaul. A clearly defined process for invitation to bid (ITB), selection and award of the EPC and O&M contracts will be followed according to international best practice to ensure fairness and selection of the best bid. A project implementation consultant (PIC) will be appointed by USAID to supervise implementation of

the EPC and O&M contracts. Following the first major overhaul, the facility will be handed over to the Ministry of Mines and Industry (MMI) to operate and maintain on behalf of the GoA.

6.3.4 Construction Activities and Schedule

The proposed construction schedule for the Gerquduq Power Plant and gas conditioning facility is presented in Appendix Q. The main construction activities are summarised below.

6.3.4.1 Water Supply System

The Afghan Gas Company's Qarakent groundwater pumping station and pipeline that originally provided water to the existing Gerquduq treatment plant (see section 4.5.2) will be rehabilitated to provide the water supply for the proposed power plant and gas conditioning system. Works will include rehabilitation of the existing pump house and installation of new pumps, refurbishment of the existing pipeline from the pumping station to the Gerquduq site and installation of a water treatment system at the Gerquduq site. The pipeline refurbishment works will require minimal excavation to install the new pipeline inside the existing line by using "slip-lining" techniques where a Polyethylene pipe is pulled inside the damaged existing pipeline. .

6.3.4.2 Gas Conditioning System

The gas conditioning system will be prefabricated by the supplier and delivered to the site for installation. Installation activities will include pipe support construction and pipe installation followed by installation of the gas conditioning system and electrical system.

6.3.4.3 Power Station

Initial works for the power station will involve site preparation activities including geotechnical investigations followed by bulk earthworks for the power house, establishment of roads and drainage facilities and landscaping and fencing works.

Civil works for construction of the main structures including power house, administration and workshop building, switchyard, ancillary structures and guard house, will initially involve foundation preparation. This will be followed by construction of the building frame, cladding and crane for the power house.

Mechanical installation will involve delivery to site and installation of reciprocating gas engine units up to 100MW, complete with associated piping and control systems. Installation of the engine units up to 100MW will be phased in progressively. Phase 1 will involve installation, commissioning and testing of units up to 30 MW to match existing load profiles in Sheberghan

and Mazar. Phase 2 will involve installation of the remaining units up to a total 100MW over a period of approximately one year following Phase 1.

Electrical installation will involve delivery and installation of generator transformers, and other electrical components, followed by installation and tie-in of the switchyard components.

6.3.4.4 Transmission Lines

A feasibility study for upgrading of the northern transmission system to which the power station will connect is currently in progress by others (ADB TA 4318-AFG Preparing the National Power Transmission Grid Project). It is anticipated that by commissioning of the power plant connection will be to the Sheberghan section only. Connection to the rest of the northern region is probable shortly afterwards following implementation of the National Power Transmission Grid Project

6.3.4.5 Gas Field Development

The Gerquduq gas field will be rehabilitated by others in parallel with implementation of the power station project. An ADB funded Project Preparatory Technical Assistance for the rehabilitation of existing gas wells and pipeline network is planned to commence later this year with project implementation to follow shortly afterwards.

6.3.4.6 Upgrading of Roads and Bridges

During construction of the power plant heavy equipment and construction materials will need to be transported to the site by road. The most likely transport route for heavy equipment sourced outside of Afghanistan will be by road from Uzbekistan via the Hairatan Bridge. The road from Hairatan to Mazar-e-Sharif is a major regional trade route and in good condition. However, bridge strengthening and maintenance work at up to four locations will be required between Mazar-e-Sharif and Sheberghan to allow carriage of heavy equipment loads.

6.4 Description of the Environment

6.4.1 Introduction

This section provides a description of the existing environmental resources of the area affected by the project in terms of physical resources, ecological resources, economic development and social and cultural resources. The description is based on site visits to the project area, discussions with local officials, literature review of available reports and map analysis.

6.4.2 Location, Topography and Soils

The proposed Gerquduq power station is situated within and adjacent to the existing Gerquduq gas processing facility approximately 15 km southwest of Sheberghan City in Jawzjan Province, in northwest Afghanistan. A 110/35/6 kV substation and an abandoned gas fired generation station are also situated adjacent to the site. A sealed road connects the site to Sheberghan City and comprises a 15 minute drive.

The site is on the edge of a desert area with minimal observed land utilisation other than 110kV transmission lines extending to and from the substation, and a network of gas wells and mainly buried pipelines scattered across an area of approximately 25 square kilometres to the south of the site.

The topography around the site forms part of an extensive loess covered plain in northern Afghanistan which abuts the foothills of the Hindu Kush to the south and extends across the border into Turkmenistan and Uzbekistan to the north. Loess comprises fine soil particles that are transported during the summer by the prevailing northwest wind from the central Asian plains and deposited on the foot of the mountains where wind speed is frustrated by relief. The plain is gently rolling or flat with elevation 350-550m. In the Sheberghan area the plain is dissected by the Sarepul River valley approximately 3km east of the Gerquduq site (see Figures 6.3, 6.4, 6.5). The Sarepul valley is about 5km wide near Gerquduq and broadens downstream to about 11km wide near Sheberghan. The power station site itself is relatively flat but somewhat exposed on a localised topographic high at an elevation of around 500m. The site has a commanding view over the Sarepul River valley in the northeast quadrant with Sheberghan city visible in the distance.

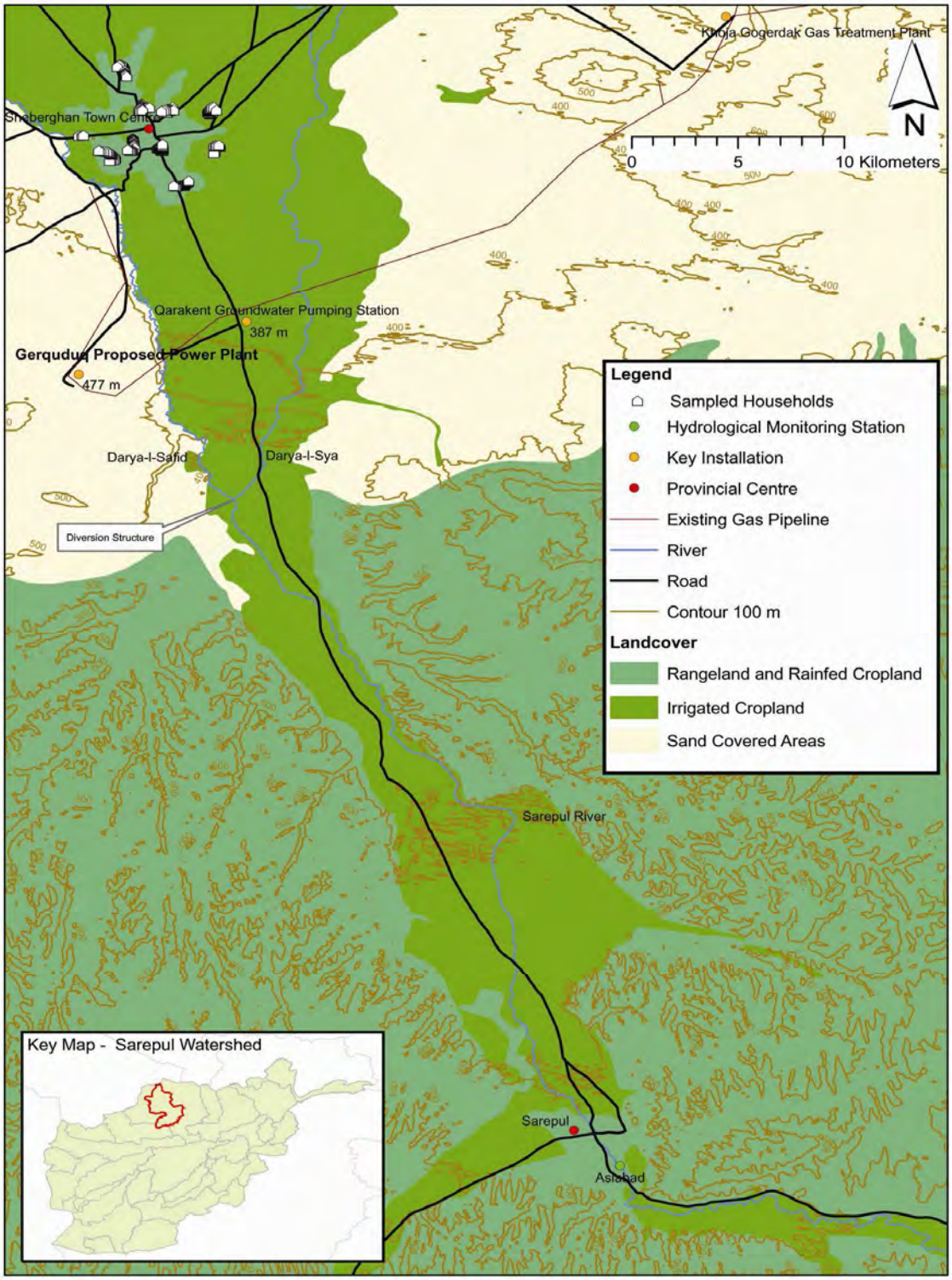

Figure 6.3: Location of Gerqudug Power Plant Including Key Geographic Features

Figure 6.4 Gerquduq Gas Processing Facility adjacent to which power plant and gas conditioning plant will be constructed. View looking south from site access road (March 2005)

Figure 6.5 Gerquduq Gas Processing Facility looking northeast over lower Sarepul River Valley (March 2005)

The main soil type on the plain and around the site is loessy loam. The loess soils generally have excellent permeability and can absorb large quantities of water.

6.4.3 Geology and Seismicity

The geology of the area comprises Neogene and Quaternary (Pleistocene) sediments comprising loess cover beds some 10s of metres thick which overlie alternating layers of pebbles/gravels, sands, silts and clays. The sediments represent the products of erosion of the mountains. Modern alluvial deposits occur along the current river valleys. The quaternary sediments overlie Mesozoic limestones, conglomerates, sandstones, siltstones and shales extending to several kilometres depth. The Mesozoic rocks are gently folded and faulted forming the reservoir strata and structures for the region's natural gas resources. The Mesozoic rocks are exposed to the south in the foothills of the Hindu Kush.

The area is seismically active being adjacent to the northern edge of the Hindu Kush where orogenic processes are active. The region has a history of strong earthquakes, >5.8 on the Richter scale.

6.4.4 Climate and Air Quality

The climate of the Sheberghan region is dry subtropical with wide annual daily temperature variations[11]. Winter (December to February) is mild with mostly cloudy weather and mean monthly minimum and maximum temperatures of -1.5 to 1.5 ºC and 7 to 10ºC respectively. With cold winter winds and clear weather, temperatures can fall briefly to as low as -22 ºC.[12] Precipitation (4 to 6 days per month) falls mainly as rain and occasional snowfalls are possible, however, the fallen snow melts quickly. Spring (March and April) is characterised by rapid daytime warming and precipitation occurs as brief downpours. Rainfall is highest during March averaging 56.4mm. Average annual rainfall is 231mm. Summer (May to September) is hot and dry with mean monthly maximum and minimum temperatures of 30 to 39 ºC and 14 to 22 ºC respectively. Daytime maximum temperatures of 45 ºC can occur. Daytime relative humidity during summer does not exceed 25 to 30% and rain is very rare. Fall (October, November) begins clear and dry then turns cloudy and rainy. Days are warm and nights are cool.

---

[11] Climatic information was obtained from several sources including: Favre, R and Kamal, GM 2004 *Watershed Atlas of Afghanistan* Kabul. FAO; Lee, K.D. 2003 *Terrain Analysis of Afghanistan*, Minneapolis, East View Cartographic; and Hong Kong Observatory website http://www.hko.gov.hk/wxinfo/climat/world/eng/asia/westasia/sheberghan_e.htm

[12] Lee, K.D. 2003 *Terrain Analysis of Afghanistan*, Minneapolis, East View Cartographic. p78.

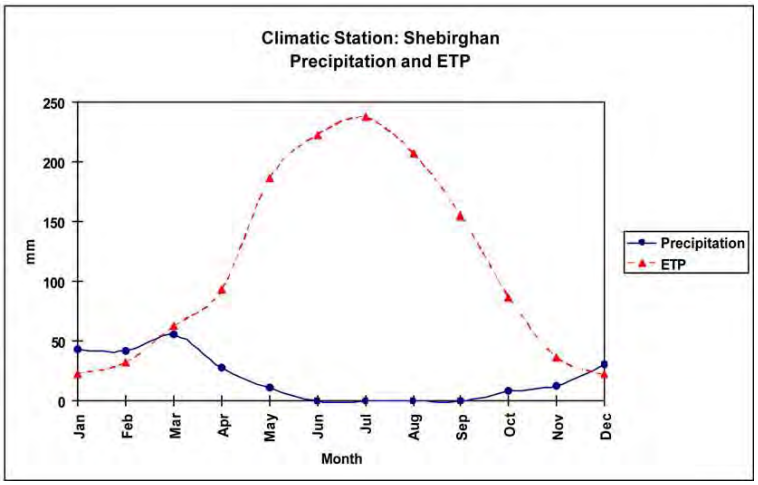

Figure 6.6: Precipitation and Evapotranspiration at Sheberghan (from Favre & Kamal p 146)

Winds are primarily north-westerly and south-easterly. East winds are also common in winter and fall. Prevailing wind speeds are 2 to 3 m/s. Rare strong winds (up to 20m/s) occur in late spring or summer and are usually accompanied by dust storms, reducing visibility to several metres.

No air quality data was available for the Sheberghan area other than one spot sample taken in Mazar-e-Sharif by UNEP in 2002[13]. Ambient air quality at the Gerquduq site is likely to be good based on the following site characteristics:

- the site is in a semi desert area 15km southwest of Sheberghan City (the nearest potential source of air pollution);
- prevailing winds would tend to push any air pollution from Sheberghan city away from the site; and
- the Gerquduq site is relatively exposed to wind and topographically not prone to atmospheric inversion.

In Sheberghan city dust and vehicle emissions appear to be the main factors negatively affecting air quality although there is evidence that air quality is also affected by the burning of oil refinery residues.

Throughout Afghanistan vehicle density is increasing rapidly and most vehicles run on low grade diesel. UNEP (2003) carried out air sampling in a number of Afghan cities including Mazar-e-Sharif. The results indicated high amounts of dust and concentrations of polyaromatic

[13] UNEP 2003, *Afghanistan Post-Conflict Environmental Assessment*, Geneva, UNEP.

hydrocarbons (PAHs). The highest concentrations were detected in Mazar-e-Sharif where analyses showed 13.6 g/Nm^3. The WHO average values for urban areas range from 1 to 10 g/Nm^3. UNEP (2003) also reported that brick factories in Sheberghan (as in other Afghan cities) were emitting thick black smoke from burning fuel[14]. UNEP noted that a coal-like sludge residue from small scale private oil refineries at Qarakent (10km south of Sheberghan) was being sold locally for domestic heating and brick factories. When burned, the sludge produces a thick black smoke. A sample of the oil sludge analysed by UNEP found approximately 10mg/kg of sulphur. When used in domestic heating the burned residue emits sulphur dioxide and hydrocarbons that can cause respiratory illnesses. UNEP noted that given the large extent to which the by-product is used in urban areas, the risk to public health is high.

6.4.5 Water Resources

6.4.5.1 Overview

Natural storage of water in the form of winter precipitation (snow) at elevation above 2,000 m represents 80% of Afghanistan's water resources (excluding fossil ground water). The amount of water received in these areas through precipitation is estimated to be in the order of 150,000 million m^3. The rest of the country receives only 30,000 million m^3 annually through rainfall resulting in a total amount of 180,000 million m^3 for the whole country (Favre and Kamal, 2004).[15] Water is Afghanistan's most precious natural resource and water management systems throughout Afghanistan have been severely damaged during years of internal conflict. The need for integrated water resource management to balance the competing demands for water resources is a key priority for the country. Competing water demands include:

- Water supply, drainage and wastewater management in urban areas;
- Rural water supply for domestic purposes;
- Agricultural water use;
- Generation of hydropower;
- Industrial water uses; and
- Water to support natural systems (forests, rangelands and wetlands).

Most Afghans do not have access to safe drinking water. This, in combination with a lack of sanitation and hygiene has serious consequences for the health and well-being of the population. An estimated 99% of developed water resources are used for irrigation. Ground water resources and recharge rates throughout the country are poorly understood which has resulted in a depletion of deep aquifers and pollution of shallow groundwater resources. Demands on surface

[14] Whilst not observed in operation during the consultant's site visit to Sheberghan 7-12 March 2005, a number of kilns were seen.

[15] Op.cit p34

and groundwater resources are likely to grow substantially due to the large number of returning refugees and internally displaced people.

6.4.5.2 Sarepul Watershed

The Gerquduq site is situated within the Sarepul watershed of the Northern River Basin one of five river basins recognised in Afghanistan. The Northern River Basin has the smallest annual flow contribution in Afghanistan with only 2% of the total but all of the water is used within the boundaries of the country. The Sarepul watershed takes its source in the high mountains of the central highlands and has an area of 16,743 km^2 comprising 2.59% of Afghanistan's total area. The catchment is drained by two main rivers the Ab-I Sya River and the Sarepul River. The two rivers converge 10km south of Sarepul town and takes the name of Sarepul until the diversion structure splitting the river into natural channels: Darya –I Sya (east side) and Darya-I Safid (west side) (Figure 6.1). The channels dry up in irrigation canals or desert sands north of Sheberghan well before reaching the northern border and Amudarya River.

Figure 6.7 shows the discharge curve for the Sarepul River and illustrates the strong influence of spring snow melt on monthly river flow with average annual flow rate around $6m^3/s$.

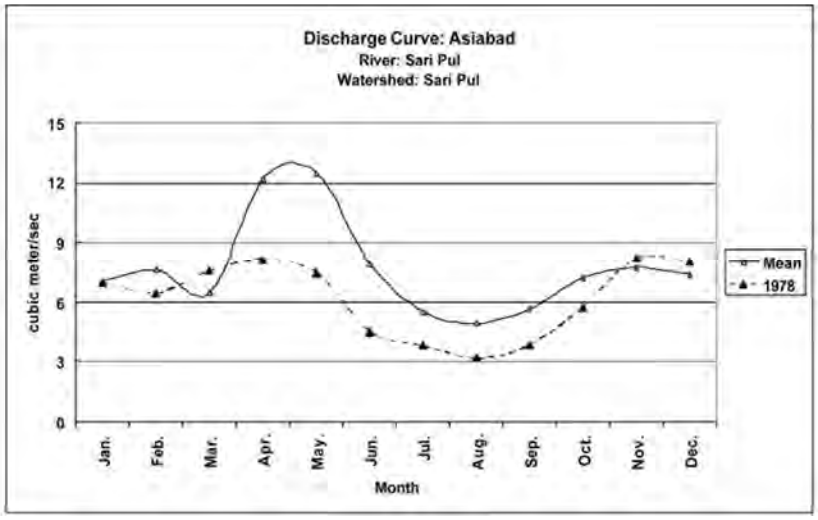

Figure 6.7: Discharge Curves along the Sarepul River (From Favre & Kamal p 147)

There is little quantitative information available regarding ground water resources in the Sheberghan apart from water supply data from the Afghan Gas Company's Qarakent pumping station. The Qarakent groundwater pumping station is located in the lower Sarepul River valley about 10km south of Sheberghan and originally provided water for both the Gerquduq and Khoja Gogerdak gas treatment plants as well as for domestic supply of Afghan Gas Company

employees at a rate of about 1,500 m^3 per day, from 12 wells. The gas treatment plants have not been operational for many years and currently only two water wells at Qarakent are operational. This data suggests that groundwater resources in the Sarepul valley could be significant. However, there is little reliable information to indicate whether or not an abstraction rate of 1500m^3 per day is sustainable for the Qarakent ground water resources.

Based on largely anecdotal data, Banks (2002)[16] attempted to estimate the normal areally distributed recharge for Neogene / Quaternary lowland aquifer complexes in Afghanistan and suggests the range 50 – 150mm/yr. Whilst acknowledging the theoretically dubious methodology used in this estimation, Banks notes that this figure translates to a maximum renewable resource of 1.6 to 4.8 litres per second per square kilometre in lowland Neogene / Quaternary sediments in Afghanistan as a whole.

Groundwater is ultimately recharged by precipitation (rain and snow), however direct recharge of precipitation to low land areas (due to very low rainfall) is likely to be very small. Thus, the recharge mechanism at Qarakent is likely to be as follows;

- Quaternary aquifers recharged in the foothills by rivers and streams descending from the high mountains and infiltrating into coarse grained alluvial fans. The recharge would likely be highest during the snowmelt season and therefore highly dependent on quantities of winter snowfall.
- Some infiltration of water into Quaternary aquifers through the bed of the Sarepul River and,
- Potentially significant recharge via leakage from irrigation channels along the Sarepul valley.

6.4.5.3 Water Management

Responsibility for management of water resources within the Transitional Islamic State of Afghanistan is as follows:

- Surface water resources: Ministry of Energy and Water
- Ground water resources : Ministry of Mines and Industry

In practice ministries appear to lack the resources and technical expertise to adequately manage the resources for which they have responsibility. There appears to be no effective system of permits or licensing for water abstraction in Afghanistan. It has been noted that in the Northern River Basin local and regional commanders (warlords) control water distribution[17].

[16] Banks, D. 2002, *Guidelines for Sustainable Use of Groundwater in Afghanistan,* Norwegian Church Aid – Afghanistan Program (NCAAP) Policy Document. p13.

[17] Favre and Kamal, op.cit p85.

6.4.6 Ecological Resources

The natural vegetation around the Gerquduq site is semi desert. Ground cover is sparse consisting of drought resistant grasses (needle grass, sheep's fescue, blue grass sand sedge). The grass usually dies back by mid- summer and the terrain takes on a desert appearance. There are no protected areas nearby. Around the site a long clawed ground squirrel (*Spermophilopsis leptodactylus*) was commonly seen and appeared to be the main prey of the commonly observed falcon. The Gerquduq area is also within the documented range of the following vertebrates[18]

- Jerboas (*Allactaga*);
- Caracal (*Caracal caracal*); and
- Striped Hyaena (*Hyaena hyaena*)

Arable land in the Sarepul Valley about 4km east of the site are planted with grain including wheat, barley and corn.

[18] Geokart 1985, National Atlas of Afghanistan, Warsaw, Geokart

Figure 6.8: Gerquduq site access road looking north showing outskirts of Sheberghan City (right), lower Sarepul River valley and typical natural vegetation (brown) around Gerquduq site. (Gerquduq site is located directly south of photo about 10 km. (from Favre and Kamal p86.)

6.4.7 Economic Development

Economic development in the project area, like most of Afghanistan, suffered major setbacks during the last 20 years of conflict and civil strife. During this time key infrastructure and economic resources were either actively destroyed or fell into disrepair through lack of maintenance. The area also suffered a heavy loss of human resources either through military casualties, or internal and external displacement of workers (fleeing a combination of military threats, ethnic/tribal tensions or forced to move due to drought). The result for Sheberghan is a collection of badly damaged or run down factories and workshops with insufficient support infrastructure and an insufficiently skilled workforce to operate them. Many such factories, for example cotton and vegetable oil processing plants, may no longer be feasible under the prevailing economic climate.

Slowly however, economic recovery is taking place, driven in large part by a construction boom (even being felt in regional cities such as Sheberghan), service industries responding to international reconstruction assistance projects, and recovery in the agricultural sector as a result

of the break of the drought. Sheberghan is an important project site (housing consultants and contractors and as a base for the import and distribution of raw materials) for the Andkhoy-Pul e Khumri road reconstruction project, being conducted over a 36 month period. It is also an important regional centre for the surrounding hinterland, providing a regional market for goods (including agricultural products and crafts), a service centre providing health (the regional hospital included) and education facilities, and a transportation hub between the traffic moving on the ring road (which sees international traffic to and from Iran, Turkmenistan, Kazakhstan and Pakistan) to the central province of Sarepul. Sheberghan also has a small but serviceable regional airport 10km to the east of the city.

Water supply for most of the city population consists of in-house supply from protected tube-well for the better-off residents, and street-side hand pumped well shared with a number of neighbours for the majority. There is no city-wide sewerage system. Larger residences and guest houses have septic tanks. Most residences have a rudimentary system whereby waste is channelled to an alcove street-side and is collected by a dirt cart operator for future use as fertiliser. Many government facilities simply have a lidded bucket. In practice most people defecate in the lee of buildings and at the roadside, with less than optimum environmental and health consequences.

Current infrastructure for electricity distribution serves 25,000 customers in and around Sheberghan, which has a population of 200,000 (or about 16,000 households). About 12 districts currently have no connection to the network whatsoever. There is approximately 6.5 MW of unmet demand (particularly in the winter) for existing customers. Currently power is supplied to Sheberghan (and subsequently on to Sarepul) by way of 110 kV transmission line from Turkmenistan via Andkhoy to the north.

In addition to small traders and grocery shops, visible industries include welding, fitting and turning, sale of fuel and construction lumber, car and bicycle repair shops, bakeries, clothes shops and pharmacies. The local administration in Sheberghan has plans for development of a steel plant, a stone cutting plant and a salt plant. While the economic viability of these industries is not known, the fact that such plans exist is indicative of planned future economic growth. The prominent industry in the Sheberghan area is, of course, the gas industry. Operations in the field are not particularly busy of late, however there are a good number of Afghan Gas employees based in the city undertaking various managerial and administration jobs. Sheberghan is also home to a sizeable cadre of public servants from district administrations covering variously power, water, mines, education, health, security, roads, city and district governance. Sheberghan's hinterland is deceptively small, with horticultural land use in the river basins (mainly wheat and other cereals), and extensive grazing of sheep on the plains. There is some grazing of camels and goats on the more marginal pastures before they turn to desert, which dominates the landscape between Sheberghan and neighbouring towns. In addition to gas, the Sheberghan area also has deposits of salt, plus coal and coke – this industry is much in evidence

as one drives south of the city. Importantly, Sheberghan has a good communications network. Both of the Afghanistan cell networks (Roshan and AWCC) have coverage in the city, and the local television station run by Aina broadcasts there in Dari, Pashto, Uzbeki and Turkmen languages via a communications tower on the hill at Yatimtaq.

6.4.8 Social and Cultural Resources

To get an accurate picture of the socio-economic dynamics of the Sheberghan region, and also to fulfil the requirement for consultation under an EIA, a simple household survey was undertaken in 140 randomly selected households. Being less than a 1% sample, the results are not statistically significant. Rather, they provide a 'snapshot' of the general socio-economic picture in this region.

Twenty-one percent of respondents were female, the balance male. Only one household in the sample was headed by a woman. Of those who answered the survey, only 35% were able to read or write a simple message in any language. Seventeen percent of respondents were graduates of high school or had higher qualifications. The most common occupation of the household head was that of government official or employee, at 23%. Also prominent were private employees (22%) and farmers (21%). Fourteen percent of household heads responded that they had no job. Seventeen percent were small traders, labourers, retired or some other occupation.

Figure 6.9: Household survey, Sheberghan

On the whole, the population of the Sheberghan area is poor – over 80% earn less than $1 a day per capita (in the absence of a more sophisticated national poverty line). The population of Sheberghan is around 200,000 of which a much larger than average (for the country) proportion is made up of the Uzbek ethnic group – something which is reflected in the domed earthen building styles of local residences rather than the flat roofed style common in other parts of the country. Ninety-six percent of respondents lived in houses constructed of mud-brick, and 92% owned their own house.

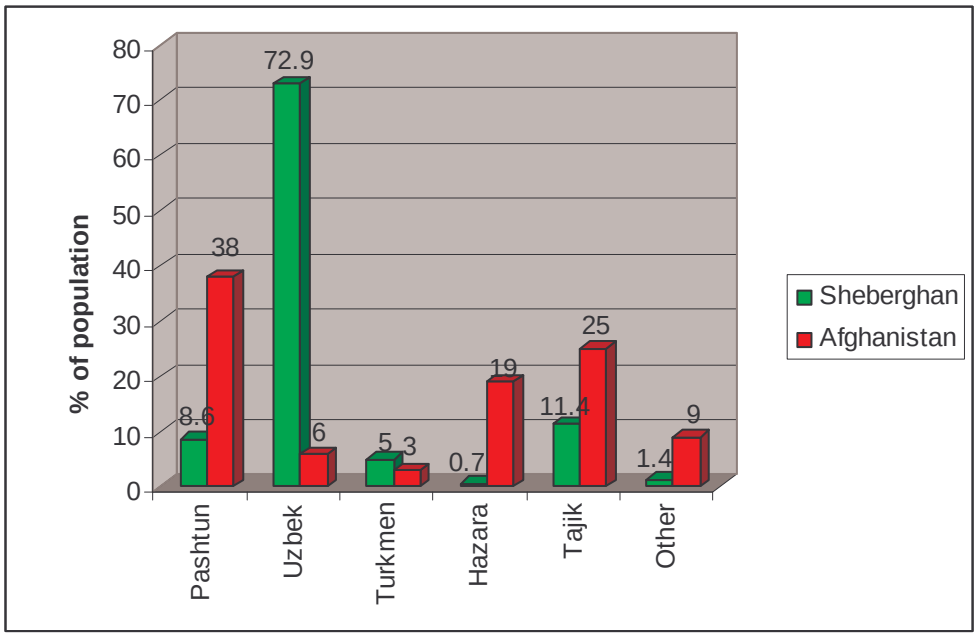

Figure 6.10: Ethnic Composition of Sheberghan and Afghanistan

The Sheberghan region population has been reasonably geographically mobile – with 27% of respondents having lived there for five years or less, 43% ten years or less. Conversely, 57% had lived there more than 10 years. The average household (number of occupants living in same dwelling) size is 9.5, with the range extending from two persons, to 24. The high average household size is in part due to a high fertility rate of 6.8, but also to a non-nuclear family structure, with one household often comprising 3 generations, more than one wife per married male, and married brothers and their families living together under the same roof.

The population distribution shows 53% children (0-14 years); the economically productive adults 44% (14-60), with an elderly population of 3%.

The dependency ratio is defined by the percentage of persons 0-14 and 61 years and over to people in the working age groups 15-60 years old, giving an indication of the burden falling on the population of working age. The survey sample has a dependency ratio of 129, which is very high, but not surprising given a high population growth rate of 1.9%, high fertility rate of 6.8% and a socio-economic propensity for large families in the absence of social welfare and reproductive health choices, and years of social insecurity due to war. In reality the dependency ratio may be much higher, since it is still not common in Afghanistan for women to undertake paid employment outside the home.

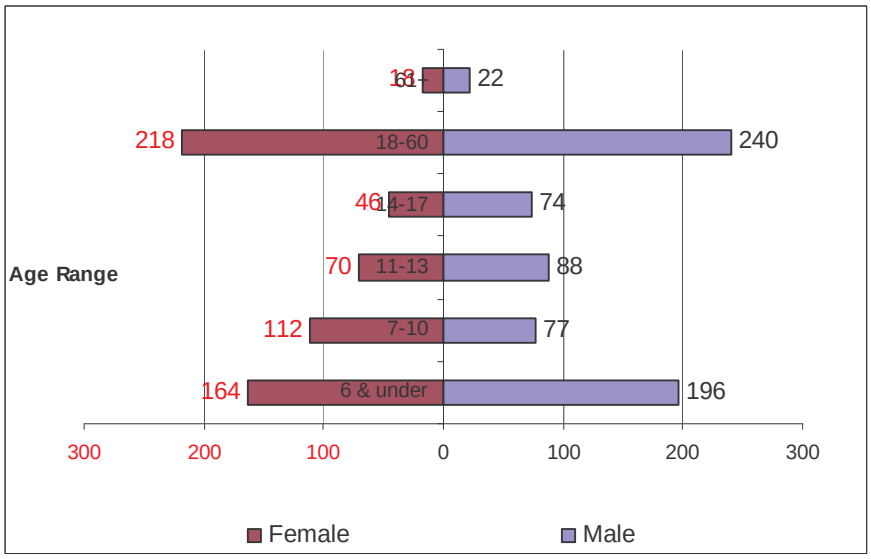

Figure 6.11: Age/Sex Profile, Sheberghan Region

The age pyramid resulting from the household survey demonstrates this high dependency ratio. It is also notable for the dominance of male children over female (which we can speculate is due to a cultural preference for males, backed up by anecdotal evidence from focus group discussions), and also the dominance of males in the 14-60 year age group. Given the many years of war in Afghanistan where mainly men rather than women were killed, this is somewhat unexpected, but may be attributable to Afghanistan's extremely high maternal mortality rate (6.5%[19]), and the fact that women suffer disproportionately to men from serious illnesses (such as tuberculosis, where 70% of those affected are women[20]).

Despite the large household size, a significant 58.6% of households have a single income earner, with 22% having two and 18% having three, four or five income earners. Ten percent of respondents reported some form of business was conducted from the house, most commonly

[19] UNDP, 2004

[20] ibid

manufacture of crafts. The average annual household income is $1,465 which equates to a household income of $4 a day, or a per capita average daily income of $0.40. Fifty-two percent of households surveyed have at least one outstanding loan presently, mostly (71%) taken out to buy food, with 9% taken out to build/repair a house, and 12% to pay for a family function such as a wedding or funeral. Only 3% of loans were for productive purposes such as to start a business or buy tools/machinery. This demonstrates a high degree of social insecurity in the region.

Figure 6.12: Village meeting, Sheberghan, showing Uzbek style houses in background

A simple analysis of energy demand was undertaken. A staggering 72% of respondents said current electricity supply was not enough for their household use. A further 27% stated supply was just enough. Only one household reported supply was adequate to their household needs. Most households in the Sheberghan region use gas for cooking and kerosene for lighting. When asked to rank their preference for social infrastructure, respondents overwhelmingly gave first priority to clean potable drinking water. Second came electricity, followed by roads, then ‘other’, then health facilities. Next was job opportunities, followed by schools.

The Sheberghan area saw much conflict under the rule of the Taliban. It is the stronghold of Uzbek General Dostom and was also the site of the massacre of Taliban prisoners by the Northern Alliance. The Sheberghan prison also has notoriety as being a place where thousands lost their lives through overcrowding, disease and malnutrition. A large and prominent graveyard with memorials to the martyrs of the war has recently been constructed to the east of the city and it is an observed point of interest for travellers who may otherwise drive through Sheberghan without stopping.

The political influence of General Dostom is considerable in Sheberghan, this being his home town and also dominated by Uzbeks. Dostom has at his command both a large military contingent and a host of influential businessmen throughout the region. Local administrators in general align themselves to the dominant powerbase and most prominently display Dostom's photograph on their desks. At the same time, Dostom has powerful regional enemies who have made attempts on his life (as recently as late 2004) and are equally likely to target infrastructure projects which have been associated with him. The significance of this political climate is not to be underestimated when implementing the project, and the consultant can only stress the utmost importance of appearing politically neutral.

6.5 Environmental Impacts

6.5.1 Impact Matrix

Table 6.5 presents an impact matrix used in screening of potential environmental effects associated with the proposed Sheberghan Gas-fired Power Plant and associated gas conditioning facility. Screening is based on the World Bank *Environmental Source Book: Volume III Guidelines For Environmental Assessment of Energy and Industry Projects*. The list of potential impacts and associated mitigation measures is a compilation of relevant potential impacts and mitigation measures identified in the Source Book for Thermoelectric Projects (in respect to gas-fired power plants), and Petroleum Refining (in respect to gas conditioning processes).

Potential Negative Impact	Significance	Duration	Mitigation
Direct Impact			
Air emission effects to human health, agriculture and native wildlife and vegetation	Minor	Long term	• Locate facility away from sensitive air quality receptors • Design stacks to reduce ground level concentrations • Install air pollution equipment including sulphur recovery processes to meet (World Bank emission guidelines) • Use deep well injection of waste gas (H_2S) below potable zones and/or sulphur recovery as an alternative to flaring
Solid waste disposal problems	Minor	Long term	• Dispose of elemental sulphur (if required) for re-use as fertilizer • Ensure safe handling, storage and transport of elemental sulphur (if required) • Provide appropriate arrangements for disposal of domestic solid waste from site.
Increased noise and vibration	Insignificant	N/A	Site approximately 5km from nearest residential receptor.
Change in surface water and groundwater quality including Toxic effects of chemical discharges and spills	Insignificant	Long term	• Minimise discharges • Control surface water run-off and treat discharges on site • Construct liners for ponds and solid waste disposal areas • Develop spill prevention plans • Develop traps and containment systems and chemically treat discharges on site. • Provide storage facilities for waste oil including recycling and disposal plan.
Change in groundwater quantity	Insignificant	Long term	Selection of power plant and gas conditioning technologies that require minimal use of water.
Vegetation removal and habitat loss	None	N/A	Facilities constructed within existing Gerquduq Gas Treatment Plant site
Resettlement and Land Acquisition	None	N/A	Facilities constructed within existing Gerquduq Gas Treatment Plant site
Traffic disruption	Minor	Short term	Develop traffic plan to minimise disruption during upgrade of bridges and roads and transport to site of heavy equipment.
Modification of historically or archeologically significant structures or lands	None	N/A	Facilities constructed within existing Gerquduq Gas Treatment Plant site
Visual impact on landscapes	Insignificant	Long term	Facilities constructed within existing Gerquduq Gas Treatment Plant site

Potential Negative Impact	Significance	Duration	Mitigation
Workers health and safety	Minor	Long term	• Maintain noise levels below 90dBA, and provide ear protection • Develop a Safety and Health Program designed to identify, evaluate, monitor and control safety and health hazards.
Construction Impacts – noise/dust nuisance, uncontrolled erosion and silt run-off	Insignificant	Short-term	• No nearby air or noise sensitive receptors. • Arid area and relatively flat site limits potential for erosion and silt run-off. • Enforcement of standard contract clauses specifying good environmental practice will ensure no unacceptable impacts
Indirect Impact			
Induced secondary development including increased demands on infrastructure	Insignificant negative impact but significant potential benefit	Long term	Project provides opportunities for economic development and poverty reduction.
Changes in demographic pattern and disruption of social and cultural values and patterns	Insignificant negative impact overshadowed by significant potential benefit	Long term	Potential socio-political benefits of project outweigh potential negative impacts

Table 6.5: Environmental Impact Matrix

6.5.2 Direct Impacts

6.5.2.1 Air Emission Effects

The preferred technology for power generation is natural gas fired lean-burn four stroke reciprocating engines. The emissions generated include carbon oxides, nitrogen oxides, products of incomplete combustion sulphur dioxide and particulate matter. Air emissions arising from the natural gas conditioning process comprises mainly SO_2 and CO_2. The nature and extent of these emissions including potential effects and the necessary mitigation measures required to reduce the emissions to acceptable levels are discussed below.

6.5.2.1.1 Carbon Dioxide

Carbon dioxide (CO_2) is the by-product of all fossil fuel fired power stations. CO_2 is present in high concentrations in the Gerquduq Jurassic fuel (reported at 8.79%), and is also a by product of the combustion process. Increases in CO_2 in the atmosphere have been linked to global warming and therefore any significant CO_2 emission has a potential global impact. Efforts to reduce the emission of CO_2 from the power station should therefore be implemented. The most effective way to reduce the amount of CO_2 per unit of energy electricity produced (MWe) is to use engines with high efficiencies. Reciprocating gas engines have high efficiency, particularly when compared with the available options for Gerquduq. Utilising waste heat for other purposes such as the gas conditioning will increase the overall system efficiency, reducing relative CO_2 emissions.

6.5.2.1.2 Carbon Monoxide and Volatile Organic Compounds

Carbon monoxide (CO) and VOC (volatile organic compounds) are both formed from incomplete combustion of carbon containing fuel. CO occurs when there is insufficient time for CO to oxidise to CO_2.

Carbon monoxide is colourless and odourless, but has high mammalian toxicity in relatively high concentrations. It is slowly oxidised in the atmosphere to CO_2. Its most significant environmental effect in "high" concentrations is the effect on human health.

Considering the good air dispersion characteristics at the Gerquduq site (exposed to the prevailing northwesterly, southeasterly and occasional easterly winds), the 5km distance (northeast) to the nearest village and the fact that the CO produced in these lean burn engines meets stringent German TA-Luft emissions limits, ground level concentrations of CO will not be a hazard to human health.

VOCs encompass a range of organic compounds that participate in atmospheric photochemical reactions. They include unburnt and partially unburnt fuel components. However, during natural gas (methane) combustion the levels of VOCs released will be insignificant since VOCs are longer chain organic compounds and typically associated with combustion of liquid fuels.

6.5.2.1.3 Nitrogen Oxides

Nitrogen Oxides (NOx) are significant emissions in reciprocating gas engines. The bulk of NOx formation is from thermal disassociation and subsequent reaction of N_2 and O_2 in high temperature flame pockets (thermal NOx). Negligible formation also occurs from early reaction of nitrogen in the combustion air with hydrocarbon radicals from the fuel (prompt NOx), and from nitrogen bound in the fuel with oxygen. Nitric oxide (NO) is the primary compound produced, part of which oxidises to nitrogen dioxide (NO_2) as temperature reduces prior to discharge to air. Nitrous oxide N_2O) nitrogen trioxide N_2O_3 and nitrogen pentoxide (N_2O_5) are formed in minor concentrations.

Evidence suggests that exposure to short term peak concentrations of NO_2 may damage health, especially of sensitive individuals such as asthmatics. Long term exposure to high levels of NO_2 (well above highest ambient levels reported in urban areas in the United States) has been shown to lead to development of chronic lung injury and disease in animals[21]. In addition to potentially damaging human health, nitrogen oxides are precursors to Ozone (O_3) formation which can harm human health and vegetation. Nitrogen oxides also contribute to acid deposition, which damages vegetation and aquatic ecosystems.

[21] World Bank 1999, op cit p225.

Indicative uncontrolled NOx emission levels for a 100 MW four stroke, lean-burn reciprocating engine fuelled by natural gas, are marginally higher than the World Bank Guidelines (Table 5.1). However, NOx decreases exponentially with decreasing combustion temperature and linearly with combustion time. Combustion modifications can significantly reduce NOx emissions by 30-90%. Selective non-catalytic reduction (SNCR) which involves tuning of the engine for later fuel injection timing can remove 30-70% of nitrogen oxides at no additional capital cost and a small increase in operating cost. Selective Catalytic Reduction (SCR), involving an ammonia storage, feed, injection system, a noble metal catalyst and catalyst housing can remove 70-90% of nitrogen oxides but involves a capital cost of US$40-$80 per kW and a significant increase in operating costs. For the Sheberghan power plant SNCR will be implemented to ensure NOx emissions are within the World Bank Guidelines.

The extent to which nitrogen oxides harm human health depends on ground level concentrations and the number of people exposed. The air-shed characteristics of the Gerquduq site coupled with appropriate plant design and operational criteria mean that only infrequent atmospheric conditions could cause increased concentrations of nitrogen oxides at ground level for short durations. The relevant factors include:

Air-shed Characteristics of Site

- on a local topographic high exposed to prevailing north-westerly, south-easterly and easterly winds (average monthly 7 – 10km/hr) which facilitate dispersion and drive pollutants away from sensitive receptors (populated and vegetated areas)
- unpopulated area (5km downwind of nearest village and 15km downwind of Sheberghan))
- semi-desert environment with nearest significant vegetation being cropland, some 4km to the east (up wind)
- meteorologically not subject to atmospheric inversion

Design criteria

- NOx emissions controlled to meet World Bank emission criteria
- Emission stack heights designed according to Good Engineering Practice (GEP). Normally, GEP stack height = H + 1.5L where H is the height of nearby structures and L is the lesser dimension of either height or projected width of nearby structures.

In view of the above it can be said that the potential impact on ground level ambient NOx concentrations is likely to be insignificant or, at worst, minor and will have an insignificant impact on human health and the local environment.

6.5.2.1.4 Sulphur Oxides

The most common form of Sulphur Oxide (SOx) in a natural gas fired reciprocating engine is SO_2. Other oxides of sulphur are only a primary pollutant when burning liquid fuels. As most of the H_2S will be removed from the fuel stream prior to combustions, SOx will not be a significant pollutant from the engine.

A major part of the conditioning process will be the need to remove H_2S as described in Section 4.3.4. H_2S gas extracted from the amine process will be incinerated giving rise to emission of SOx.

Sulphur dioxide is a colourless and pungent gas which at sufficient concentration irritates the eyes and respiratory tract. It is a corrosive acid gas which combines with water vapour in the atmosphere to produce acid rain. Both wet and dry depositions have been implicated in the damage and destruction of vegetation and in the degradation of soils, building materials and watercourses.

World Bank guidelines limit the extent of SO_2 emissions to 0.2 tonnes per day per MWe (or 20 tonne per day for a 100MW plant). This equates to a gas stream of less than 1.38% by volume H_2S. The power plant will be fuelled by the Gerquduq Jurassic gas reserves which have a H_2S content of between 0.18 and 0.71% H_2S. Thus the resultant SO_2 emissions from the proposed power plant and gas conditioning facilities will be well within the World Bank emission limits. Short emergency interruptions to the Gerquduq Jurassic gas supply will be provided by the Cretaceous sweet gas reserves from Gerquduq, Khoja Gogerdak or Yatimtaq. In the unlikely event that the Gerquduq gas reserves are exhausted during the life time of the power plant, conditioned gas (or raw sweet gas if available) from other gas fields will be supplied to the Gerquduq Power Plant. The responsibility for gas treatment of these other gas sources will be with the respective well fields from which they come. However, based on existing knowledge it is considered that the Gerquduq Jurassic (0.18 – 0.71% H_2S) gas reserves are sufficient to run the 100MW power plant for 44 years.

Owing to the air shed characteristics of the site as described above, SO_2 gas emitted by the proposed power plant and conditioning facility will be dispersed with little chance of it forming acid rain and contributing to photochemical smog and will have insignificant impact on human health.

6.5.2.1.5 Particulate Matter

Like SOx, particulate matter is only a primary pollutant when burning liquid fuels. When burning natural gas the rate of emission of particulate matter will be very low. Reciprocating engines do produce minimal amounts of particulate matter from volatized lubricating oil, particularly as the engine wears. Particulates emitted will be almost all PM_{10} (particles around 10 microns or less in size). In sufficient concentration PM_{10} can cause respiratory distress, cause soiling of surfaces, and will accelerate corrosion of surfaces by retaining moisture and acidic materials). The emissions of particulate matter from the Sheberghan gas-fired power plant will be of no consequence.

A summary of typical uncontrolled gaseous emissions from a natural gas burning 100 MW four stroke lean burn reciprocating engine power plant compared to the relevant World Bank emission requirements is provided below.

	Gas-fired 100 MW Reciprocating Engine – Four Stroke Lean Burn[22]		**World Bank Guidelines**
Unit	lb/MMBtu fuel input	kg/d	kg/d
Carbon dioxide	110	878,706	Not specified
Carbon monoxide	0.317 (90-105% load)	2,532	Not specified
Nitrogen Oxides	4.08 (90-105% load)	32,592	31,200 (13g/kWh at 15% oxygen)
Sulphur dioxide	N/A	18,000[23]	20,000 (0.2 tonne per day per MWe)
Particulate Matter	0.0101	81	280 (50 mgNm3)

Table 6.6 Comparison of Indicative Pollutant Emission Levels with World Bank Emission Requirements.

[22] Figures for pound per million BTU were sourced from US EPA AP42 Compilation of Air Pollutant Emission Factors Chapter 3.1-3.2. Figures for kilograms per day were calculated for typical efficiencies of 46.5% reciprocating gas engine.

[23] Based on accepting gas at 1.25% H_2S. Actual gas from the Gerquduq Jurassic reserves has been reported to contain 0.18 to 0.71% H_2S, equating to between 2,600 and 10,300 kg/d

6.5.2.2 Solid Waste Disposal Issues

Their will be limited solid waste arising from operation of the power plant and conditioning facility. Solid waste will comprise largely minor amounts of domestic waste including consumables, packaging, waste paper etc. A domestic waste disposal system should be implemented during plant operations to ensure waste is routinely collected on site and disposed of appropriately at a nearby landfill.

6.5.2.3 Noise and Vibration

Owing to the remote location of the power plant from the nearest sensitive receptors (5km) the potential impacts of noise and vibration from the plant on the local population will be insignificant. Similarly there will be insignificant impact on wildlife. Any noise sensitive desert wildlife nearby has already been subject to noise impacts from the adjacent (and now abandoned) gas fired power plant during its years of operation and has most likely left the area. Noise arising from the proposed 100MW reciprocating engines will be significantly less than that produced by the alternate gas turbine technology.

6.5.2.4 Change in Surface and Ground Water Quality

The nearest surface water body to the site is the west channel of the Sarepul River some 3km east of the site. Potential aqueous discharges from the power plant and gas conditioning facility will be small and will have no impact on the Sarepul River. Discharges will either be treated on site and discharged to the ground or stored on-site and transported elsewhere for safe disposal. Aqueous discharges from the power plant and gas conditioning facility that could potentially affect ground water quality include the following:

- Surface water run-off;
- Waste coolant water;
- Waste lubricating oil
- Natural gas liquids and water removed from gas stream;
- Spillage of oil, grease, coolant and other chemicals such as glycol and amine; and
- Domestic and sanitary wastewater.

6.5.2.4.1 Surface Water Run-Off

Surface water run-off from the site would be mainly the result of rainfall draining from buildings and hard standing areas and wash down of vehicles and equipment during construction and operation phases. A properly designed site drainage system should be implemented to prevent possible flooding of the site and should be directed through an oil and grease separator before discharge to the ground outside the site. Given the arid environment and low annual rainfall of

the area such runoff is likely to be minimal but occasional heavy downpours particularly in Spring could be expected. With the implementation of a well designed site drainage system including oil and grease traps the potential impact of site run-off on surface and groundwater will be insignificant.

6.5.2.4.2 Waste Coolant Water

Gas reciprocating engines require coolant water which must be periodically removed and temporarily stored during maintenance operations. Following engine maintenance the coolant is returned to the engine and topped up as necessary. Only on rare occasions will coolant water need to be replaced. When this is necessary the waste water will be transferred to an impermeable drying basin allowing the water to evaporate in the dry climate. Thus disposal of waste coolant will have no impact on surface or ground water quality.

6.5.2.4.3 Waste Lubricating Oil

The reciprocating engines will go through large quantities of lubrication oil as part of routine engine maintenance. For a 100MW plant, this is likely to be approximately 280 tonne / year. It is proposed that the waste oil will be stored in drums on site and free-issued or sold at a minimal cost to the local community to either fire the local brick kilns or as heating oil. Procedures will be established for safe storage and handling of waste oil on-site, and transport off-site, so as to minimise and contain potential spillages and prevent discharge to the ground. Implementation of good practice for the handling and storage of waste oil will ensure that potential impacts on surface or ground water will be insignificant.

6.5.2.4.4 Natural Gas Liquids and Water Removed From the Gas Stream

At Sheberghan the gas analysis indicates that the volume of natural gas liquids (NGLs) in the gas stream is small. The analysis shows 1.1% ethane, 0.14% Propane and negligible hydrocarbons heavier than this. Owing to the low volume of NGLs that could have an economic value no allowance has been made in the plant preliminary design for targeted NGL extraction. Nevertheless, conditioning of the natural gas will be necessary before use in the power station. Conditioning involves removal of NGLs, water and hydrogen sulphide.

The removal of natural gas liquids and water condensate will be achieved through passing the gas through a knock out vessel. The expansion of the gas into a larger vessel causes the condensate to drop out of the gas. Gravity then separates the liquid and gas streams. The condensate then drains into a drying pan. Water will be the main component of the condensate and will harmlessly evaporate in the dry site conditions. The likely volumes of undifferentiated NGLs will be negligible, will not be a hazard and will have insignificant environmental impact.

Whilst most of the free water associated with extracted natural gas is removed by the simple knock-out vessels, the removal of the water vapour that exists in solution in natural gas requires a more complex treatment. The proposed Glycol dehydration process to remove water vapour in solution in the natural gas is described in detail in Section 4.3.5.

6.5.2.4.5 Spillage of Oil, Grease, Coolant and Other Chemicals

Lubricating oil, grease, glycol, amine solution, solvents and any fuel that may be used by the power plant should be stored within concrete or brick buildings designed for such purposes. The oil/fuel/chemical storage building should be a well-ventilated, roofed structure, with an impermeable concrete floor. A concrete berm should be integrated into the entranceway, so as to create a shallow holding tank in the event that oil or chemicals are accidentally spilled or released from a drum or tank. Fire extinguishers of the type suitable for fighting an oil or fuel fire should be positioned within and outside of any oil/fuel/chemical storage building.

Oil spill clean-up materials (sorbent pads, loose sorbent material, etc.) should be stationed in any oil/fuel/chemical storage building in clearly labelled containers. Power plant operators will need to be trained in good housekeeping practices, including how to clean up oil/fuel/chemical spills and dispose of contaminated sorbent material.

6.5.2.4.6 Domestic and Sanitary Wastewater

Domestic and sanitary wastewater from site facilities will be directed to an appropriately designed septic tank and soak-away pit such that there will be insignificant impact on groundwater quality.

6.5.2.5 Change in Ground Water Quantity

During operation of the Gerquduq and Yatimtaq gas treatment plant, groundwater from the Qarakent pumping station was supplied to both plants at a rate of about 1500 m^3 per day (900 m^3 to Gerquduq and 600 m^3 to Yatimtaq). However, there is no available information on the sustainability of such an abstraction rate on the available groundwater resources. There is also no effective system of permits or licensing for water abstraction in Afghanistan and anecdotal evidence suggests that water distribution in the Northern River Basin is under the control of regional commanders. There are also difficulties in establishing a reliable economic cost for water to supply the plant. In view of these issues the power plant and gas conditioning technologies chosen for the Gerquduq power plant were selected on the basis that they will require minimal use of water.

The total daily water requirement for the proposed power plant and gas conditioning facility at Gerquduq will be a maximum of 15 m^3 per day. This will be supplied by the Qarakent pumping

station. Given the historical water abstraction rate at Qarakent such a rate is likely to have an insignificant impact on ground water quantity and the sustainability of ground water resources at Qarakent.

6.5.2.6 Vegetation Removal and Habitat Loss

The Gerquduq power plant and associated gas treatment facility will be constructed within the site of the existing Gerquduq gas processing facility. There will therefore be little if any disturbance to the semi-desert land adjacent to the site and effectively no impact related to vegetation removal and habitat loss. Rehabilitation of the old water pipeline between the Qarakent water pumping station and Gerquduq power plant site will be undertaken using slip-lining techniques and will have insignificant impact on vegetation.

6.5.2.7 Resettlement and Land Acquisition

There will be no need for resettlement or land acquisition during the construction and operation of the Gerquduq power plant and associated gas treatment facility. This is due to the fact that the facilities will be constructed within the existing Gerquduq Gas Treatment plant site, which is owned by the Government, and the nearest residential area is at least 4km away. Similarly, installation of the new water pipeline between Qarakent and Gerquduq will be undertaken within the existing water pipeline corridor, the land of which is owned by the Government.

6.5.2.8 Traffic Disruption

Traffic volumes on roads outside the main urban centres in northern Afghanistan are relatively light. However, trucks carrying heavy equipment from Hairatan will need to pass through the cities of Mazar-e-Sharif and Sheberghan. The main roads through Mazar-e-Sharif can be congested during the day so that a traffic management plan will need to be prepared to facilitate the least disruptive route and timing for the occasional heavy loads that will need to be transported through the city. This will necessitate close co-ordination with city officials. Night-time transport of heavy loads through the cities of Mazar-e-Sharif and Sheberghan may be required. Impacts of construction vehicles on normal rural traffic will be minor and of short duration.

During the operation of the power plant traffic volumes to and from the plant will be light consisting mainly of daily staff transport and service vehicles from Sheberghan and occasionally from Mazar-e-Sharif and elsewhere. Such traffic will have an insignificant impact on existing road usage.

6.5.2.9 Cultural Heritage

The Gerquduq power plant and associated gas treatment facility will be constructed within the site of the existing Gerquduq gas processing facility. Furthermore, available information indicates that the area immediately around Gerquduq site includes no archeologically significant structures or lands.

6.5.2.10 Visual Impact

Being located on a local topographic high in a relatively isolated and sparsely vegetated area above a broad river valley, the buildings of the existing Gerquduq Gas Treatment Plant are significant landmark and clearly visible from several kilometres away, especially along the Sheberghan to Sarepul road around Qarakent. The new buildings to be constructed on the site to house the (nominal 12) reciprocating engine units and gas conditioning plant will therefore have only a minor impact on the existing visual quality of the area. However, there would be scope for visual enhancement through designing colour schemes for the new structures which are complementary or blend into the existing semidesert landscape.

6.5.2.11 Occupational Health and Safety Issues

The project design includes preparation of an Operation and Management Plan for the site. Occupational Safety and Health (OSH) standards will be built into the plant's operations plan, and include but are not limited to standards for:

- Protective clothing
- Equipment for protection of eyes and ears
- Handling toxic substances
- Safety in the workplace especially around heavy machinery
- First aid and registration of accidents
- Confined space hazards
- Hazardous material, fire and explosion prevention.

The Environmental Management Plan similarly documents minimum standards during construction (see below).

6.5.2.12 Construction Impacts

Potential construction impacts include noise and dust nuisance arising from excavation, transport and storage of equipment and building materials and building construction activities. Such nuisance will be insignificant due to the absence of nearby sensitive receptors including residential areas and agricultural land. There is also little potential for erosion and silt run-off impacts due to the limited excavation works, low rainfall and relatively flat site

Spills or improper disposal of lubricants, fuels and other chemicals used in construction and installation of equipment have the potential to pollute adjacent area, if site activities are not carefully managed. To mitigate potential impacts temporary earth bunds should be formed around materials, fuels and lubricants stockpiles. A chemical spillage plan, including emergency procedures, will be required by the Environmental Management Plan as part of the contractor's Environmental Management Programme.

The construction contract will specify good environmental practice to be implemented during construction so as to minimise potential construction related environmental impacts. This will include a requirement for the EPC contractor to prepare and submit to the supervising engineer for his approval, a Construction Environmental Management Programme outlining the contractor's methodology for ensuring good environmental practice during construction. Implementation of the Construction Environmental Management Programme will be monitored and enforced by the supervising engineer during the construction period.

6.5.3 Indirect Impacts

6.5.3.1 Induced Secondary Development

It is expected that a major construction project such as the proposed gas fired generation facility, using labour based construction techniques wherever feasible, will generate significant immediate economic benefits to the surrounding district at household level through employment creation, income generation and skills transfer. It also has the potential to stimulate secondary (supply) industries and service industries locally, and bring in skilled labour from surrounding districts who may then settle in the area if these staff go on to gain employment at the facility once it is operational.

6.5.3.2 Disruption of Social and Cultural Values

In a socio-political context, employment of a large workforce on an infrastructure project has the potential to promote inter-ethnic reconciliation and political stability through the introduction of transparent, skills and merit based working conditions. The introduction of transparent, skills and merit based working conditions will be encouraged as far as possible taking account of the prevailing cultural and socio-political context. It is considered that such an approach could have positive flow-on effects to local security and stability As noted in section 6.4.8, remaining politically neutral is essential in order to avoid security risks. Where possible, local labour should be employed given the high local unemployment rate.

6.6 Analysis of Alternatives

6.6.1 Project or No Project

Within the context of Afghanistan's plans to expand the availability of electric power in the northern region the alternative to utilising available indigenous power resources is to continue to rely on imported power from Uzbekistan and Turkmenistan. Such an alternative could be unnecessarily expensive compared to indigenous resource development and also potentially unreliable in respect of cross-border issues. Clearly, where economically feasible, developing indigenous power resources is preferable to relying on imports. For Afghanistan to achieve its development aspirations harnessing its potential indigenous power resources is essential particularly when such resources can be developed in an environmentally sustainable manner.

The gas fields around Sheberghan represent a significant resource for potential use in the energy sector. This fact was recognised in the recent Power Sector Master Plan (2004)[24] which identified the feasibility of developing a thermal power facility in Sheberghan as a high priority. Furthermore, from an environmental point of view natural gas is recognised as a "cleaner" fuel when considering available fuel options for thermal power plants[25]. On the basis of national power demands, prudent use of available natural resources, self determination and environmental considerations, the proposed development of a gas fired thermal power plant at Sheberghan can be said to be preferable to a "no project" scenario.

6.6.2 Site and Technology Selection

Consideration of environmental and social factors was integral to both the selection of the most suitable site and selection of the most appropriate technology for the Sheberghan Gas-fired Power plant. Initial screening of environmental and social factors considered during site selection included the following:

[24] Ministry of Water and Power Afghanistan 2004, Power Sector Masterplan. Prepared by Norconsult Norplan under World Bank AFG/03170.

[25] World Bank 1999, op cit p422

Environmental	Social
• Air pollution impact • Air shed issues/wind direction • Noise and vibration • Water resource conflicts • Existing and potential land use • Ecological impact • Visual buffering	• Political /Social acceptance/ • Proximity of work force • Technology transfer opportunities • Historical/cultural issues • Resettlement and land acquisition • Future township expansion

Table 6.7: Comparison of Initial Social & Environmental Screening Factors

Six potential sites for the power plant were initially identified and subject to a rigorous screening and site selection process.[26] The six sites included:

- Site 1, at Gerquduq near the existing DABM substation and within the site of the Afghan Gas Company well field and gas processing facility.
- Site 2, at Khoja Gogerdak adjacent to the Afghan Gas Company well field and gas processing facility.
- Site 3, at Qarakent, in the vicinity of the existing water pumping station, which supplies potable water to Sheberghan City and the Afghan Gas Company assets at Gerquduq and Khoja Gogerdak
- Site 4, on the eastern outskirts of Sheberghan City, on land identified as a potential industrial zone
- Site 5, adjacent to the Ministry of Mines and Industry fertilizer plant at Qala Jangi, near Mazar-e-Sharif.
- Site 6, adjacent to the existing DABM substation at Mazar-e-Sharif.

Site 1, Gerquduq ranked highest (most favourable) in the screening of environmental and social factors as well as ranking highest overall when all other factors, (procurement, technical, construction, operational, financial etc) were considered.

Following site selection, the selection of the most appropriate power generation technology for natural gas including pollution control systems and gas conditioning requirements was undertaken. In this regard consideration was given to site characteristics, gas quality, environmental and economic benefits and cost-effectiveness.

The suitable proven technologies for power generation of 100MW with natural gas are:

1. Reciprocating Gas Engines
2. Combined Cycle Gas Engines

[26] The site selection process and methodology are described in Section 3.

3. Open Cycle Gas Turbines
4. Combined Cycle Gas Turbines

The suitable proven technologies for gas conditioning (H_2S and H_2O removal) include:
H_2S Removal
1. Amine Scrubbing
2. Biological
3. Iron Redox

H_2O Removal
1. Glycol dehydration
2. Solid-Desiccant Dehydration
3. Joule-Thompson Valve

A detailed discussion of the merits of each technology is provided in Section 4, power plant technology selection. Section 4 recommended the best technical configuration for the Gerquduq site, taking into consideration the following constraints:

- World Bank restrictions on emissions levels for gases such as NOx and SOx.
- Gas with a 0.18% - 0.71% H_2S component that will require scrubbing
- Reserve gas from the Yatimtaq or Khoja Gogerdak fields via existing pipelines.
- Limited water in the region, placing a premium on water usage.
- Water pricing from Qarakent based on regional water values.
- No thermal load at the Gerquduq site other than for gas conditioning.
- No fuel oil available as an alternative source or for duel firing.
- A relatively high elevation with large swings in temperature.
- Natural gas pricing from the wellhead based on international commodity prices
- Reuse of the existing Gerquduq field pipelines and gas gathering systems.
- Phasing in of gas supply as the Gerquduq gas fields are rehabilitated and developed.
- An initial small electrical load until the rehabilitation of the northern Transmission Link sometime in 2007.
- Minimal generation capacity existing in country.
- Transport of equipment likely by road through Uzbekistan.
- Security issues limiting the involvement of some companies.

A preliminary financial evaluation of generation technologies was undertaken to determine the most cost effective technology based on the above site constraints. The result is that based on the above site constraints, an open or combined cycle single fuel natural gas reciprocating gas engine power station has the lowest cost for delivered power. A large scale combined cycle industrial gas turbine power station has the next lowest cost. Open cycle gas turbines and smaller combined cycle gas turbine power stations are not competitive.

Due to the unit generation size constraints, the preferred technology is reciprocating gas engines, phased in as the power demand, transmission and gas supply becomes available. This type of unit has distinct advantages over the large combined cycle gas turbines including:

- No discernible water use
- Gas engines have a lead time of 13-20 months compared with 24-36 months for combined cycle gas turbines.
- Smaller unit size allows better grid integration
- Smaller unit size allows phasing of generating capacity to meet grid interconnection.
- Smaller unit size allows phasing of units to meet gas availability
- More use can be made of local skills for maintenance
- Efficiency gains can further be achieved by integration with the gas processing plant.

Amine scrubbing was chosen for the following reasons:

- cheapest overall capital and operating cost;
- accepted industry standard technology for this level of H_2S;
- robust technology;
- can be turned down to cover the swinging H_2S composition; and
- has been used on site previously so the local technicians have familiarity with the technology

An overall summary of the chosen technology is as follows. Gas from the Gerquduq Jurassic gas field (with H_2S concentration of 0.18 to 0.71%) shall be delivered to the power station after being stripped of H_2S gas using amine tower, and water will be removed using glycol towers. Waste H_2S gas shall be flared to atmosphere resulting in stack emissions of SO_2 below the World Bank emission guideline of 0.2 tonne per day per MWe. Short emergency interruptions to the Gerquduq Jurassic gas supply will be provided by the Cretaceous sweet gas reserves from Khoja Gogerdak or Yatimtaq. In the unlikely event that the Gerquduq gas reserves are exhausted during the life time of the power plant, treated gas (or raw sweet gas if available) from other gas fields will be supplied to the Gerquduq Power Plant. The responsibility for gas treatment of these other gas sources will be with the respective well fields from which they come. However, based on existing knowledge it is considered that the Gerquduq Jurassic (0.18 – 0.71% H_2S) gas reserves are sufficient to operate the 100MW power plant for 44 years.

6.7 Mitigation Plan

This EIA report has identified potential environmental impacts and necessary mitigation measures in respect to the construction and operation of the proposed Sheberghan gas-fired power station and gas conditioning plant. Table 6.8 below presents an Environmental Management Plan in matrix format which summarises the specific mitigation strategies and

activities recommended in the EIA including associated effectiveness indicators, means of verification, responsibilities and time scale for mitigation implementation.

Mitigation Strategy	Mitigation Activity	Effectiveness Indicator	Means of Verification	Responsibility	Time Scale
Environmental Impacts					
Minimise CO_2 emissions to atmosphere.	Select gas engines with high efficiencies.	Select reciprocating engines with high efficiency factors	Design documentation	EPC Contractor	Design phase
World Bank Ambient Air Quality Guidelines achieved at site perimeter	Emission stack heights designed according to Good Engineering Practice (GEP)	During plant operations levels of PM_{10}, TSP, NO_2 and SO_2 at site perimeter are within WB Ambient Air Quality Guidelines	Design documentation	EPC Contractor and Ministry of Mining and Industry	Design phase and operational phase
NOx emission levels within World Bank Guidelines of 312 kg/day/MW.	Tune engine for later fuel injection timing.	NOx emissions consistently meet World Bank Guidelines	Operational specifications and continuous stack emission monitoring.	EPC Contractor and Ministry of Mining and Industry	Design phase and operational phase
SO_2 emission levels meet World Bank Guidelines of 0.20 tonnes/day of SO_2 per MWe	Power Plant Remove H_2S from gas stream before combustion. Gas Conditioning Plant Ensure H_2S concentration of raw gas is less than 1.383% by volume	Gas conditioning plant delivers H_2S-free gas to power plant. Continuous monitoring of raw gas stream shows <1.383% by volume H_2S concentration.	Design documentation, Operational specifications and routine monitoring data. Design documentation, operational specifications, audit of monitoring data.	EPC Contractor and Ministry of Mining and Industry	Design phase and operational phase

Mitigation Strategy	Mitigation Activity	Effectiveness Indicator	Means of Verification	Responsibility	Time Scale
Recycling of waste lubricating oil	Waste oil free-issued (or sold at minimal cost) to local community for heating fuel.	Local supply networks established for recycling of waste oil.	Plant operational records	EPC Contractor and Ministry of Mining and Industry	Operational phase
Protection of ground and surface water quality.	Well designed site drainage system ensuring drainage around maintenance areas, workshops and chemical/fuel storage areas passes through oil and grease interceptors prior to discharge to ground outside the site. Domestic and sanitary discharges to be directed to a septic tank and soak-away pit. Provision of an impermeable evaporation basin on site for disposal of waste coolant water.	Drainage and sewage discharges from site properly controlled. Waste coolant water evaporated.	Design documentation for site drainage and domestic and sanitary discharges Design documentation	EPC Contractor and Ministry of Mining and Industry	Design and operational phases
Protection of environment from chemical spills	Prepare and implement Chemical Spillage Management Plan.	Sound environmental practice including: Oil, grease, fuel and chemicals stored in purpose designed buildings or hard standing	Documentation (Chemical Spillage Management Plan)	EPC Contractor	Design and operational phases

Mitigation Strategy	Mitigation Activity	Effectiveness Indicator	Means of Verification	Responsibility	Time Scale
		areas with impermeable floors and concrete berms. Fire extinguishers and chemical spill clean up materials available on site. Training provided to staff on chemical spill clean up			
Minimise visual intrusion of structures on existing landscape.	Use appropriate colour schemes and plant layout that helps structures blend into existing landscape.	Landscape and visual issues taken into account during design phase	Design documentation	EPC contractor	Design phase.
Maintain a safe and healthy working environment	Prepare and implement Operational Safety and Health (OSH).Plan as part of operational management plan	Minimal site accidents involving injury or death	Documentation (OSH standards and procedures included in OSH Plan)	EPC Contractor	Operation Phase
Good environmental practice during construction	Preparation and implementation of a Construction Environmental Management Programme	Sound environmental practices implemented during construction including: • Traffic management measures during transport of heavy plant equipment	Contract documentation	EPC Contractor	Construction phase

Mitigation Strategy	Mitigation Activity	Effectiveness Indicator	Means of Verification	Responsibility	Time Scale
		• Chemical spillage management • Dust Control • Domestic and construction waste management			
Social Impacts					
Maximise opportunity to reduce poverty and increase economic benefits to local population.	Hiring of local labour, use of labour-intensive construction methods where feasible	• Local labour numbers • Local contractors numbers • Local service providers numbers	Contractor's and operator's hiring and procurement records	EPC contractor/MMI	Construction and operation phases
Maximise opportunity to enhance socio-political cohesion.	Provide training and skills transfer opportunities to local labour force when feasible. Ensure transparent local recruitment processes and merit based working conditions when feasible	• Training courses/ on-the-job training plans • Staff satisfaction surveys • Staff turnover rates • Records of disputes	Contractor's and operator's hiring and procurement records, daily diaries of contractor, operations meeting minutes Monitoring of social impact against feasibility study socio-economic baseline data	EPC Contractor/MMI Project implementation consultant/ DoE	Construction and operation phases

Table 6.8: Environmental Management Plan

6.8 Environmental Management and Training

6.8.1 Institutional Responsibility and Capacity

In the absence of an existing national legal framework for environmental impact assessments in Afghanistan, the EPC contractor and MMI will be responsible for ensuring that the project complies with the environmental policies, procedures, and best practices of the World Bank, and the specifications and special provisions that are set out in the EPC and O&M contracts. The EPC contractor (under supervision of the Project Implementation Consultant (PIC)) will be responsible for ensuring, on a day-to-day basis, that the mitigation measures and monitoring activities identified in this EIA are implemented. It is recommended that an appropriately trained and experienced staff member of the EPC contractor be appointed as the designated environmental officer with responsibility for overseeing the implementation of the Environmental Management Plan. The EPC environmental officer would provide on-the-job training to MMI staff throughout the construction and operation period until full hand-over of the plant to MMI. The PIC will supervise the EPC's implementation of the EMP until handover of the plant to MMI. Thereafter it is expected that the Department for the Environment (DOE) would assume supervision of the MMI's implementation of the EMP.

In regard to environmental matters the role of the PIC will be to:

- Ensure that the EPC Contractor executes his responsibilities as specified in the EMP
- Liaise with the Department of the Environment (DOE) on project progress and related environmental issues, keeping abreast of the developing national environmental legislation framework
- Monitor the social conditions associated with the project
- Carry out periodic environmental monitoring and audit of the project to identify potential problems that should be corrected, and provide guidance on how problems might be resolved.
- Provide on-the-job training to DOE staff in undertaking environmental monitoring functions during project implementation as outlined above so that once operation of the plant is handed over to MMI, the DOE has the capability to undertake the PIC's environmental monitoring and audit functions.

The responsibilities of the EPC Contractor include:

- Implementing environmental controls and mitigation measures as set out in this Environmental Management Plan as well as any additional measures necessary for compliance with emerging national environmental legislation framework;
- Undertake environmental monitoring in accordance with the Environmental Monitoring Plan;
- Prepare an Environmental Action Plan (EAP) for dealing with all non-compliances identified during environmental monitoring;

- Preparing monthly reports to DOE, MMI and the PIC on environmental issues, including:
    - results of environmental monitoring
    - implementation status of environmental mitigation measures including environmental problems encountered and actions taken (or proposed) to correct problems.
- Provide on-the-job training to MMI operational staff in all environmental management responsibilities outlined above prior to handover of the plant to MMI. Thereafter the MMI will assume the EPC contractor's environmental responsibilities as outlined above.

6.9 Monitoring Plan

The Environmental Monitoring Plan (Table 6.9) identifies the environmental monitoring requirements to ensure that all the mitigation measures identified in the EMP are implemented effectively. Environmental monitoring methodology for this project includes:

- Audit of detailed designs;
- Audit and approval of site environmental planning documents;
- Routine site inspection of construction and operation/maintenance works to confirm or otherwise the implementation and effectiveness of required environmental mitigation measures;
- Continuous monitoring of air emission discharges to ensure World Bank emission limits are complied with; and
- Periodic monitoring of ambient air quality at the site perimeter.

Breaching of environmental performance limits will trigger the implementation of an EAP.

Environmental Monitoring Tasks[27]	**Implementation Responsibility**	**Implementation Schedule**
Pre Construction Phase		
Audit project bidding documents to ensure compliance with EMP and that all necessary environmental design specifications are included	Project Implementation Consultant's (PIC) Environmental Specialist	Prior to issue of bidding documents.
Audit project bidding documents to ensure contractor obligation to equal pay for equal work between men & women	PIC	Prior to issue of bidding documents.
Construction Phase		
Audit and approval of EPC Contractor's Construction Environmental Management Programme (CEMP)	PIC site supervision staff	CEMP to be submitted for audit and approval within one month of commencement of construction.
Site inspection to ensure contractor's compliance with CEMP.	PIC site supervision staff	Monthly throughout construction period
Audit of EPC contractor's routine construction progress reports. Progress reports shall include implementation status of CEMP	PIC site supervision staff	Monthly throughout construction period
Review and approve EPC Contractor's Chemical Spillage Management Plan	PIC site supervision staff	Prior to plant commissioning
Operation and Maintenance Phase		
Continuous monitoring of NOx and SO_2 emission levels from power plant and conditioning plant stacks to ensure compliance with World Bank emission levels as specified in EMP.	EPC contractor/MMI reporting to PIC/DOE	Continuous throughout operational lifetime of power plant.
Monitoring of 24hr-average and 1hr-average concentrations of PM_{10}, TSP, NO_2 and SO_2 at site perimeter. to demonstrate compliance with WB Ambient Air Quality Guidelines	EPC contractor/MMI reporting to PIC/DOE	Monthly throughout operational lifetime of power plant.
Audit implementation of Chemical Spillage Management Plan	EPC contractor/MMI reporting to PIC/DOE	Four times per year throughout lifetime of power plant
Audit waste oil recycling operations.	EPC contractor/MMI reporting to PIC/DOE	Throughout lifetime of project following relevant maintenance works.

[27] Monitoring of issues related to compensation of landowners for land acquisition and loss of production, etc., is addressed in the Resettlement Action Plan.

Environmental Monitoring Tasks[27]	Implementation Responsibility	Implementation Schedule
Inspection of site drainage, domestic wastewater drainage systems and waste coolant evaporation basin.	EPC contractor/MMI reporting to PIC/DOE	Two times per year throughout lifetime of power plant
Audit implementation of Occupational Safety & Health (OSH) plan	EPC contractor/MMI reporting to DABM	Monthly throughout lifetime of plant
Preparation of monthly environmental monitoring and audit reports	EPC contractor/MMI reporting to PIC/DOE	Monthly throughout lifetime of plant

Table 6.9: Environmental Monitoring Plan

6.9.1 Reporting and Review

Throughout the lifetime of the project, the EPC (initially) and MMI (after hand over) will prepare monthly environmental monitoring reports to DOE, and the PIC (until end of PIC contract). Environmental monitoring reports shall include the following:

- Description and results of environmental monitoring activities undertaken during the month.
- Status of implementation of environmental mitigation measures.
- Key environmental problems encountered and actions taken to rectify problems.
- Summary of any exceedences of World Bank air emission discharge limits and ambient air quality guidelines during the month including a description of any Environmental Action Plans implemented.
- Summary of any environmental complaints received and actions taken.

6.10 Environmental and Management Costs

Environmental mitigation measures proposed for this project include standard mitigation measures which are normally associated with international best practice in the design, construction and operation of thermal power generation facilities. As such the proposed mitigation measures in Table 6.5 will be included in the EPC and O&M contract specifications, with relevant component costs listed in the bill of quantities.

Similarly, the environmental management and monitoring activities identified above including on-the-job training requirements will be incorporated into the respective budgets for the EPC, O&M and PIC contracts.

A summary of the respective budget responsibilities for environmental mitigation measures and environmental management and monitoring activities is given in Table 6.10.

Environmental Management Activity	**Budget Responsibility**
Pre-construction Phase	
Environmental design audit of bidding document	PIC contract
Construction Phase	
Preparation and implementation of CEMP	EPC contract
Audit and approval of Contractor's CEMP including Chemical Spillage Management Plan Site inspections to ensure Contractor's compliance with EMP Audit contractor's progress reports in respect of environmental issues	PIC contract
Operation Phase	
Implementation of EMP Continuous monitoring of emissions Monthly monitoring of ambient air quality parameters	O&M contract
Reporting and audit of: • implementation of Chemical Spill Management Plan • waste oil recycling • status of site drainage and domestic wastewater drainage systems • implementation of Occupational Safety & Health (OSH) plan Preparation and audit of monthly environmental monitoring reports On-the-job training of MMI staff in environmental management responsibilities	O&M contract (implementation, reporting and training), PIC contract (audit)
On-the-job training of DOE staff in environmental monitoring and audit of power plant operations	PIC contract

Table 6.10: Responsibility for Environmental Mitigation Management and Monitoring Costs

6.11 Summary and Conclusions

The Sheberghan Gas-fired Thermal Power Facility (including gas conditioning plant) will generate only minor and acceptable environmental impacts. Key environmental mitigation measures based on international best practice in the design, construction and operation of thermal power generation facilities have been incorporated into this project and reflected in the Environmental Management Plan, such that there will be no unacceptable residual environmental impacts arising from the project. Such mitigation measures will be specified in the EPC and O&M contract documents.

Potential air quality impacts are likely to be minor and acceptable due to the following factors:

- Natural gas is relatively clean compared to other fuels used for thermal power;
- High efficiency engines will be used to reduce the amount of CO_2 per unit energy of electricity produced;
- Cogeneration between the power plant and the gas conditioning plant will further reduce the amount of CO2 per unit of electricity produced than if produced separately.
- The site has good air shed characteristics including exposed to prevailing winds that blow away from sensitive receptors, it is not subject to air inversions, it is far from populated areas;
- The gas engines will be tuned for later fuel injection timing (Selective Non-Catalytic Reduction) to ensure World Bank nitrogen oxide emission limits are met;
- Stack emission heights will be designed according to good engineering practice; and
- Incineration of the acid (H_2S) gas stream following gas conditioning will result in emission of SO_2 levels which are well within the World Bank emission limits and thus avoid the need for expensive sulphur recovery and potentially problematic sulphur disposal processes (or alternatively, re-injection of H_2S gas into a spent gas well).

Potential impacts on water resources and water quality are likely to be minor or insignificant due to the following factors:

- Power generation and gas conditioning technology has been selected to minimise water requirements and therefore minimise potential impacts associated with conflicting water uses;
- On-site treatment or management of potentially polluting discharges will be implemented including containment bunds, grease and oil traps around areas draining workshops and fuel storage areas, and a septic tank for sanitary waste;
- An impermeable evaporation basin will be provided near the site for disposal of waste coolant water
- Procedures will be established for safe storage, handling, transport and recycling of waste oil according to international best practice; and

- appropriate buildings and facilities established for the on-site storage of oils, fuels and chemicals including spillage containment measures, fire fighting and clean up facilities and procedures, all in accordance with international best practice.

There will be no need for resettlement and land acquisition since all project land is currently owned by the MMI.

There will be insignificant impact on vegetation and habitat loss since the project is located within the existing Gerquduq gas treatment plant site which itself is located in a semi-desert area.

Traffic impacts during transportation of heavy equipment will be minor and temporary and easily mitigated through a traffic management plan prepared and implemented in co-ordination with local authorities.

Visual impacts will be insignificant due to siting within the existing Gerquduq gas treatment plant site. Visual intrusion will be further minimised through the use of appropriate colour schemes and plant layout that helps structures blend into existing landscape.

Preparation and implementation of an Occupational Safety and Health Plan according to international best practice will ensure a safe and healthy working environment for operational staff.

Construction impacts will be minor and temporary and mitigated through preparation and implementation of a Construction Environmental Management Programme to ensure good housekeeping practices during construction.

Significant socio- economic benefits will accrue from the project including:

- Economic benefits through employment creation both during construction and operation
- Opportunities for the local work force where there is currently high unemployment
- Skills transfer and development opportunities
- Stimulation of service industries
- Socio-economic benefits associated with Improved electricity supply
- Merit based employment conditions potentially stimulating inter-ethnic reconciliation flowing on to improved societal security and stability

Full implementation of the Environmental Management Plan and Environmental Monitoring Plan supported by the proposed institutional arrangements for environmental supervision and training will ensure that the residual environmental impacts of the Sheberghan gas-fired power plant project will be acceptable. No further environmental assessment is considered necessary.

APPENDIX A - Statement of Work

APPENDIX A - STATEMENT OF WORK

USAID AFGHANISTAN ENERGY ASSISTANCE PROJECT

STATEMENT OF WORK (SOW)
FEASIBILITY STUDY FOR THE DEVELOPMENT OF A GAS FIRED THERMAL POWER FACILITY IN SHEBERGHAN

The feasibility study of the Sheberghan thermal power facility is to be undertaken in two (2) Phases as defined below. **Subcontractor's scope of work includes the items identified in Phase I, unless identified otherwise. Phase II will be performed by others**.

A. OBJECTIVES OF THE STUDY

A.1 The objectives of the feasibility study are to:

(a) PHASE I:
Prepare a feasibility study of the development, construction, acceptance and operation and maintenance of a gas fired thermal power facility inclusive of ancillary requirements at Sheberghan as defined under C. SCOPE OF THE STUDY ; and

(b) PHASE II (BY OTHERS):
Finalize, release and manage the Invitation to Bid (ITB) process for the proposed facility under a bid award process which combines Engineering, Procurement and Construction (EPC) and Operation and Maintenance (O &M) of the facility through the first major overhaul period inclusive of recommendation of Bid award selection as defined under C. SCOPE OF THE STUDY.

B. BACKGROUND

The Government of Afghanistan (GOA) plans to expand the availability of electric power in the Balkh Region of Northern Afghanistan. Currently it is planned that the region will be supplied by import power alone from Uzbekistan until an alternative/additional supply can be developed. The GOA feels strongly that there is a high priority need to develop its own electric power resources and supplement these resources with imports when needed.

In order to develop its own resources the GOA requires clarity concerning domestic resource options to improve Afghanistan's basis for negotiating future import contracts and to improve import strategies. The GOA has indicated that priority must be given to the performance of studies of key supply projects that can be implemented in the short to mid-term (2006-2007).

Among the wealth of natural indigenous resources in Afghanistan available for potential use in the energy sector are the gas fields within the Balkh Region around the City of Sheberghan. Within the Master Plan of the Ministry of Water and Power, developed with the assistance of Norconsult (Power Sector Master Plan ((AFG/03170)) Norconsult Norplan), the feasibility of developing a thermal power facility in Sheberghan was identified as a high priority study

Efforts have been undertaken to determine the availability of gas supply and reserves for a thermal power facility in Sheberghan. Further clarification and validation of gas supply and reserves will be ongoing. The initial view stated within the Master Plan was that a thermal plant development at Sheberghan, of approximately 50 MW, could be available as early as November 2007, with future potential to contribute to meeting demand growth in the north and eventually, depending on sizing and timing, in the Kabul Region.

C. SCOPE OF THE STUDY

PHASE I:

C.1 Review and confirm, as required to produce the required deliverables, the availability of fuel supply (by others), and Northern Grid assessments and data as they apply to the Shebergahan Power Facility development.

C.2 Define the technologies considered, optimum size, location, design-configuration, environmental assessment, schedule and cost of the proposed facility based on current and future gas supply, Northern Grid system development and supply/demand for electrical energy and capacity within the Northern Grid. Cost is to be based upon preliminary engineering Budget Cost estimates of plus or minus twenty (20) percent for use in assessing reasonableness of responses to the ITB. Cost estimates shall include all infrastructure including gas and water pipelines, roads and transmission lines. Costs of current and future gas supply, at the source, will be provided by others.

C.3 For the viable alternatives, specify the costs of electricity production from the facility and rationalize its development and potential for phased expansion in consideration of other electrical supply options and further regional gas supply development.

C.4 For the viable alternatives, define cost and investment requirements for the development and operation and maintenance of the facility inclusive of all financial, economic and human capacity building costs.

C.5 Develop a preliminary draft Invitation to Bid document and attendant Criteria for Bid Award Selection and Bid control process. (This item will be provided by others).

PHASE II (BY OTHERS):

C.6 On notice of acceptance of PHASE I by USAID/Afghanistan, develop a finalized Invitation to Bid document, Bid control process and Criteria for Bid Respondent Selection process in consultation with USAID/Afghanistan.

C. 7 Assist as requested in managing the Invitation to Bid process from Bid release through Bid response submittal, reviewing bids and respondents proposed EPC and O&M contract terms with negotiated clarification as required and make recommendation for award to USAID/Afghanistan.

D. PROPOSED METHODOLOGY:

During PHASE I, Subcontractor will be expected to:

D. 1 TECHNICAL

1. Determine the plant site with defined consideration of preliminary site geology, access for site preparation and deliveries for construction and O & M and efficient provision of gas and water supply and grid interconnection costs. (Site purchase cost to be provided by others).

2. Verification of currently available gas supply including capability of the known gas reserve base to supply the proposed plant configuration for its operating life will be performed by others.
3. Verify acceptability of the gas supply pressure to operate the facility and determine and cost any required gas conditioning and compression facilities including back-up compressor if required. Gas supply pressure information will be provided by others.
4. Assessment of available data on gas reserves and production potential providing clear specification of the probabilities applicable to additional gas volumes expected to be available and the time frame expected for their development will be provided by others.
5. Provide single line coordinate mapping, length and cost for gas supply and water supply pipeline inclusive of required compression and intake structures, land costs and rights of way as applicable.
6. Specify and cost any required liquid fuels back-up and storage requirement inclusive of fuel availability.
7. Specify and cost all required access roads and road upgrades and waste disposal facilities.
8. Determine water supply quality and availability requirements consistent with proposed plant configuration.
9. In consideration of site, gas and water supply, and grid interconnect and Northern Electrical System energy and capacity requirements assess plant design options and define among options the proposed least cost plant design option. Subcontractor shall consider future thermal plant expansion potential consistent with gas field development potential, as provided by others.
10. Provide for the selected design option a proposed plant configuration with capital cost specification within a Budget Cost of plus or minus twenty (20) percent with conceptual engineering and one-line diagrams and a cost breakdown for the electrical, mechanical, structural and civil engineering as follows:
Cost breakdown for:

(a) Power Island equipment
(b) Electrical equipment and installation
(c) Mechanical equipment and installation
(d) Other supply items (Commissioning spares etc)
(e) Civil works
(f) Black start requirements

Conceptual engineering including:

(a) Heat and mass balance study
(b) Process flow diagram
(c) Piping and Instrumentation diagram
(d) Basic design specification
(e) Equipment specification
(f) Plant layout
(g) Equipment and basic piping layout
(h) HV/LV electrical design based on single line diagram
(i) Control Philosophy
(j) Conceptual civil design

11. Provide specification of any Battery Limits (supplies and works that would be expected to be outside of the scope of supply under a standard ITB) that may apply to the development of this ITB.
12. For the proposed plant configuration define manning requirements with specification of training requirements and timing and options for training local staff.

13. For the proposed plant configuration provide budget costs for plant operation inclusive of:
    (a) Fuel cost per KWH.
    (b) Manning costs
    (c) Materials and spare parts costs (through first major overhaul)
    (d) Consumables cost
    (e) Manning infrastructure costs inclusive of security costs and housing etc as applicable
14. For the proposed configuration specify budget costs for:
    (a) Commissioning
    (b) First minor overhaul maintenance costs
    (c) First major overhaul maintenance costs
15. For all maintenance for the proposed configuration specify skill requirements and availability of expected domestic skills to maintain the plant. If local skills are found to be limited in availability, propose training regimen inclusive of timing requirement to bring local skills to level required to maximize use of local staff.
16. For the proposed configuration specify sourcing requirements for materials and spare parts required for Operation and Maintenance.
17. For the proposed configuration provide a project development and construction schedule.

D.2 ENVIRONMENTAL & SOCIOLOGICAL IMPACT

1. For the site selected define and provide schedule for the sequencing and acquisition of all required national, regional and local site permits and licenses. Provide a listing of permitting and licensing authorities and major permits required.
2. Provide an Environmental and Sociological Impact Statements consistent with World Bank Environmental Impact Assessment (EIA) Guidelines.

D. 3 FINANCIAL AND ECONOMIC EVALUATIONS

1. A basic integrated financial model incorporating all cost information that produces a cost per delivered kWh under variable dispatch conditions will be produced by others. The model should be capable of providing sensitivity assessments applicable to major cost input, operational plant loading and financing assumptions.
2. All model inputs are to be specified on a reasonably detailed input page indicating source, age and quality of data inputs utilized.
3. An assessment of the relative cost per kWh of the proposed facility versus other available assessed options for electric supply for the Northern Electrical System will be provided by others.
4. Subcontractor shall, through the conduct of their specific scope-of-work, support this modelling effort and shall provide, as necessary, required inputs, including but not limited to technical and financial considerations, to be incorporated into this financial model. It is expected that those responsible for preparing this financial model, and the resultant analysis, AEAI will frequently, and on a regular basis, communicate directly with various employees of Subcontractor whom are in the best position to supply such inputs. The two parties (Subcontractor and AEAI) will coordinate their activities so as to facilitate the production of a financial analysis that accurately represents the facts and resultant recommendations.

D.4 PREPARATION FOR IMPLEMENTATION OF PHASE II: SUBJECT TO USAID APPROVAL OF PHASE I RESULTS (BY OTHERS)

1. Using available templates for Invitation to Bid for EPC and O&M contracts provide a preliminary draft ITB for the proposed facility.
2. Utilizing known industry best practices develop preliminary draft of the Criteria for Bid Award and Bid process control procedures.
3. Develop a preliminary list and, following USAID/Afghanistan approval of the list, request expressions of interest from pre-qualified EPC & O & M companies that will be provided the ITB. (Bids may be provided to companies which form their own EPC and O&M consortiums to respond to the ITB.)

During PHASE II AEAI will be expected to:

D. 5 PREPARE AND IMPLEMENT FINAL INVITATION TO BID

1. Assist in developing a final ITB document and submit to USAID/Afghanistan for approval to release. ITB should include draft contracts for EPC and O & M against which Bid respondents will be required to note exceptions as part of bid response.
2. Assist in developing final Criteria for Bid Award Selection procedures to be approved by USAID/Afghanistan.
3. Assist in developing and providing final control procedures for ITB.
4. Upon approval from USAID/Afghanistan release ITB to approved list of interested Bid respondents.
5. Assist in the review of Bids as requested and through application of USAID/Afghanistan approved Criteria for Bid Award Selection (including EPC and O & M contract exceptions indicated by respondents) propose Bid award recipient for USAID/Afghanistan approval.

E. OUTPUTS AND REPORTS

E.1 Subcontractor shall provide the following interim and summary reports in PHASE I:

1. Specification of the gas field reserve requirements and gas and back-up fuel delivery requirements and cost consistent with plant specification. This item will be provided by others.
2. Specification of water supply quality and availability, delivery and cost requirements under all seasonal conditions.
3. Evaluation of the demand for the capacity of the facility, potential for future expansion of the facility as base load for further gas field development, and capability to interconnect to the Grid or need assessment for additions to the Northern Electrical System to maximize efficient use of the facility. Information on further gas field development will be provided by others.
4. Quantitative and qualitative evaluation of the feasibility of the technical, economic, financial (by others), social and environmental advantages –benefits and costs of proceeding with building the proposed facility. The evaluation shall include site selection, selection of technology, project technical information as shown in Section D.1, environmental assessment, and project cost and schedule.
5. Conceptual design of the process to be used under Controlled Documents conditions to proceed with the Invitation to Bid.

6. Development of list of pre-qualified Bidders with documented expressions of interest (by others).
7. Draft Invitation to Bid (by others) subject to acceptance by USAID/Afghanistan of above reports.

E.2 At completion and acceptance of PHASE I AEAI is expected to assist USAID/Afghanistan to expeditiously proceed to PHASE II to provide the following:

1. An Invitation to Bid (ITB) to Engineer, Procure and Construct and Operate and Maintain the proposed facility, inclusive of provision of required spares, through the first major overhaul of the facility determined as most feasible under Phase I consistent with FAR and ASAIDAR requirements.
2. As part of the ITB draft EPC and O&M contracts (FIDIC contracts are acceptable) are to be provided to which respondents to the ITB must note exceptions for use in final Bidder selection process.
3. A definitized process for the letting of the ITB to insure maximum controlled response within the limited time frame specified in the schedule below.
4. A defined qualitative and quantitative Criteria for Selection process to be applied to the review of ITB responses with specified weights for each Criteria which will result in the selection of the most efficacious respondent under the ITB.
5. Recommendation to award final contracts to a bid respondent based upon Criteria for Selection and fairness and reasonableness of the finalized price and contract terms and conditions to implement the development of the Sheberghan facility.

F. SCHEDULE OF COMPLETION OF TASKS

F. 1 Subcontractor will comply with the schedule provided in Attachment B and meet all required completion dates. Subcontractor shall bring to AEAI's attention any variation in schedule and/or costs for any of the assigned scope. Subcontractor shall not proceed with any work at variation with this scope without AEAI's prior approval.

G. PROCEDURE FOR SUBMITTING PROGRESS REPORTS AND FINAL REPORTS

G. 1 Subcontractor shall submit weekly progress reports by task for review by AEAI. On or before each completion date indicated in the contract schedule Subcontractor shall submit Task Completion Reports in draft in English for final discussion, review and acceptance prior to payment.

H. SUMMARY OF DELIVERABLES

The output of this feasibility study will consist of main deliverables:

1. Feasibility report addressing the technical, financial (by others), economic, environmental, social and operational issues attendant to the proposed configuration selected for development of the Sheberghan thermal power facility.
2. A recommendation of the best option thermal plant configuration to go forward with in an Invitation to Bids to develop the facility.

APPENDIX B - List of Key Officials

APPENDIX B - LIST OF KEY OFFICIALS

APPENDIX B - LIST OF KEY OFFICIALS

The following key officials were met or contributed during the field visit stage of the Project:

Ministry of Mines and Industries (MMI)

Minister of Mines and Industries	H.E. Dip, Eng, Mohammad Mir Sediq
President of Oil & Gas	Dep. Eng. M. Akram Ghiaci
Minister Adviser for Mines and Energy	Prof. Dr. Dipl. Geol, A. Rahman
Ashraf	
Kabul Polytechnical	Dr Eng Abdul Rahman Mangal
MMI Expert	Eng Ahmadi
Afghan Gas Company	Eng Habibullah

Ministry of Energy and Water (MEW)

Minister of Energy and Water	HE Ishmayeel Khan
Acting Deputy Minister for Energy and Water	Eng M. Amin Munsif
Chairman Da Afghanistan Breshna Moassesa (DABM)	Eng Sultan
General Director Planning	Eng Ghulam Rabbani

Independent Department for the Environment

Deputy Minister for the Environment	Dost Mohammad Amin

USAID/AEAI:

Deputy Director Office of Infrastructure, Engineering & Energy USAID	Dr. Peter A. Jezek
Deputy Manager - Power Infrastructure, Engineering & Energy USAID	Mr Tom Hayes
Deputy Chief of Party Afghanistan Energy Assistance Program AEAI	Dr Jack Whippen
MMI Adviser AEAI	Ms Mary Louise Vitelli
Vice President Chief of Party AEAI	Mr Carl Duisberg
Security and Logistics Manager AEAI	Mr Dejan Bosnjak

Other Local Officials & Consultants

Deputy Minister of the Independent Department	Mr Dost Mohammad Amin
President of the Fertiliser Factory	Engineer Abdulrahman
President -Oil and Gas	Eng Abdul Kuddos
Deputy Assistant Oil and Gas	Eng Nazir Mohammad
Director General Transport	Eng Abdul Razok
Chief Geologist	Eng Abdul Wassie
Drilling Engineer	Eng Hussain
Director of Technical processes	Eng Mohammad Hamaoun
Specialist Geophysical Processes	Eng Gulam Naqshvanv
Chief Engineer.	Eng Bakhtulah

Regional Director DABM Sheberghan	Engineer Mohammad
President of Afghan Gas Company	Engineer Habibullah
United Nations Environment Programme (UNEP)	George Bouma

APPENDIX C - Questions from Afghan Gas Company

APPENDIX C - QUESTIONS FROM AFGHAN GAS COMPANY

APPENDIX C - QUESTIONS FROM AFGHAN GAS COMPANY

Jerguduq.

you get a lot of information about Gas area but we don't had any information about how many reserves we are having now.

as we have information every family spend 6m³ Gas ~~for~~ in 24 hours.

If in the Shaberghan city 15000 families have been used from Gas. for 24 hours they will ~~be~~ spend 82000m³ Gas.

~~For~~ in a year it's cost will be on. and it's reserves well ~~be~~ end for ~~to this~~ years. be cause most of Gas will come out from production.

what's your plan about this mine.

also yatem Taq is located
in this position.
It has worthless reserves.

From having information
about this mains somet
Gas will have watter.
Do you have any plane
about ~~new~~ laying a foun-
-dation of mains? newly?
what do you thinks about
repairation of Gas will and
rehabilitation. reconstraction
of Gas will be. who's the
responsible of that?
you or the ministry.
we need for your idea.
and we must ~~to~~ take report
of~~or~~ ministry of mains.
thank you for cooperation.

The following typed version of the above letter represents the Maunsell team's understanding of what is being asked after reading the questions and discussing the text of the letter with Dr Mangal)

Text begins:

Afghan Gas Co. and MMI would like to see any information that AEAI have on the available reserves in the fields that are currently producing gas.

The Gerquduq field is currently being used to supply gas to domestic consumers in Sheberghan. There are about 15000 connections and the daily supply to these consumers totals 82000 cubic metres per day. Afghan Gas estimates that there are enough reserves in the Gerquduq field to maintain the current gas supply rate for about 2 years without rehabilitation. After that time Afghan Gas Co will not have the capability of recovering any usable quantity of gas from this field. What is the rehabilitation plan for the Gerquduq field and will rehabilitation enable the supply of gas to existing consumers to be maintained without interruption?

The gas company is not currently able to draw gas from the Yatimtaq field because of the high water level in the formation. Is there a plan to provide new production wells for this field?

Will the rehabilitation and reconstruction of wells be undertaken as part of an aid project or at the expense of the Ministry of Mines?

APPENDIX D - Site Selection Matrix

Cat/Element Nº	Selection Criteria	Weighting	Justification				
			5	4	3	2	1
100	**Land availability and suitability**						
101	Land availability	**5**	Overall project feasibility depends on availability of land				
102	Plot size	**5**	Overall project feasibility depends on area of available land				
103	Clear ownership/title	**5**	Overall project feasibility depends on availability of land				
104	Actual or potential land disputes	**4**		Uncertainty of negotiated outcome adds to capital cost and time overrun during implementation			
106	Potential for future expansion	**3**			Lack of adjacent land availability will limit potential expansion of power generation activity		
108	Buffer zones	**3**			Boundary noise mitigation requirements to meet international best practice		
109	Land utilisation	**4**		Strong preference to use non arable land for industrial development			
115	Pipeline Easements	**5**	Overall project feasibility depends on timely and successful granting of pipeline easements				
116	Site accessibility for staff and services	**2**				Operational efficiency could be hindered if staff and services accessibility to site is difficult.	
117	Dust storm frequency and intensity	**1**					Exposure to frequent dust storms will require appropriate equipment and plant requirements.
120	Temperature ranges T5 and T95	**3**			Plant efficiency is affected by long periods of high temperatures		
125	Flooding potential	**3**			The potential for flooding will influence infrastructure design and affect plant operability and availability.		
200	**Transmission Grid Connection**						
201	Existing Transmission System	**4**		Supporting infrastructure cost and construction timing increases with distance to existing fixed transmission nodes			
202	Planned Transmission System	**4**		Supporting infrastructure cost and construction timing increases with deviation from straight line between existing fixed transmission nodes			
300	**Water Supply**						
301	Distance to surface water supply	**2**				Likely ground water source preferred	
304	Ground Water Availability	**4**		Availability of a sustainable water supply throughout the life cycle of the power plant is important.			
306	Water Quality	**2**				Water treatment will be required to meet minimum water quality requirements.	
307	Water Rights	**4**		Adequate and sustainable water supply is dependent on obtaining use rights.			
400	**Fuel Supply**						
401	Back up fuel	**4**		An alternative gas supply is necessary to ensure sustainability of power generation.			
403	Pressure of NG	**3**			Minimum gas pressure requirements must be met to ensure optimal plant efficiency, but is technology dependent.		
500	**Construction Cost Factors**						
502	Local infrastructure facilities	**3**			Existence of local infrastructure facilities will reduce capital costs and facilitate speedier construction programme.		
503	Site benching requirements / topography	**2**				The extent of site preparation requirements will affect capital cost.	
506	Construction accommodation requirements	**1**					The extent of construction accommodation facilities needed will influence capital costs to a limited degree.
507	Construction laydown areas and secure storage	**2**				Availability of secure storage areas wil facilitate construction efficiency and reduce losses due to theft.	
510	Domestic delivery routes	**3**			Delivery routes and transportation mode will influence type of plant selected and costs associated with upgrading of roads, bridges etc.		
518	Dust filtration requirements	**3**			Capital and recurrent costs associated with the need for specific design measures to deal with dust are significant.		
600	**Civil Facilities and Site Development**						
611	Roadways	**3**			Establishment and maintenance of site access roads is important to facilitate delivery of equipment and materials to site.		
613	Airports	**2**				Proximity to airport will facilitate timely and efficient procurement of equipment and ongoing technical support.	
700	**Environmental Considerations**						
702	Air pollution impact	**4**		Very important to minimise air pollution			
703	Air shed issues	**4**		High dispersion potential important for minimising air pollution impacts			
704	Noise control	**4**		Very important to minimise noise impacts on nearby inhabitants			
705	Vibration	**4**		Very important to minimise vibration impacts on nearby inhabitants			
707	Water resource conflicts	**4**		Very important to minimise water use conflicts			

Cat/Element Nº	Selection Criteria	Weighting	Justification				
			5	4	3	2	1
708	Existing and potential land use	3			Important to ensure loss of arable land is minimised.		
709	Ecological impact	4		Very Important that ecological impact is minimised			
711	Aesthetics / Visual buffering	3			Important to minimise visual impact of plant.		
714	Predominant wind direction	3			Wind can push air pollutants towards sensitive receptors		
800	**Social Considerations**						
801	Political acceptance	5	Overall project feasibility depends on political acceptance.				
802	Heat sink for heating from power station	2				Potential for enhancing social benefits of project	
803	Proximity of available workforce	3			Employment opportunities for nearby community		
804	Ongoing international support requirements	3			International technical support will be required during construction and in the initial operational phase.		
805	Technology transfer opportunities	3			Project provides significant opportunity for capacity building and technology transfer.		
806	Future township expansion	3			Project will provide impetus for regional economic growth and town expansion.		
807	Socio-political issues	4		Factional dis-satisfaction with site selection will lead to ongoing security risk for plant.			
808	Access to first aid and medical	1					Project may result in improved access to first aid and medical services due to implementation of best practice in health and safety.
809	Local acceptance	4		Local acceptance of project critical to its development and sustainability.			
810	Historic / cultural interest	3			Important that project site does not impinge on sensitive historical and cultural areas.		
811	Displacement of inhabitants	4		Minimisation of social disruption and timely implementation of appropriate and acceptable compensation payments as required, is vital for community acceptance.			
812	Ease of land acquisition	5	Overall project feasibility depends on the acquisition of necessary land.				
900	**Safety and Security**						
901	Gas line vulnerability	4		Security of gas line essential for power plant operation.			
903	Power plant vulnerability	3			Security of power plant important for sustainability of power output.		
905	Local fire brigade capability	1					Existence of a trained and equipped on site fire brigade would provide added security to plant operations.
907	Distance to residential areas	3			Proximity of residential areas is an important factor in both ensuring safety and facilitating commuting convenience for plant staff.		
908	Curfew constraints	2				Curfew constraints provide some limitations to the manpower management of plant operations	
1000	**Operations and Maintenance**						
1002	Staffing	2				Availability of local staff will facilitate efficient plant operations.	
1004	Local expertise (contractors)	3			A formal training programme will be required to train local staff in plant operations and maintenance.		
1005	Cathodic protection	3			A formal training programme will be required to train local staff in cathodic protection.		
1008	Site access in adverse weather conditions	3			Important for sustainability of power output that measures are in place to ensure site accessibility in adverse weather conditions		
1010	Training	2				Project provides good opportunity for technology transfer and capacity building of local work force.	
1100	**Risk**						
1102	Schedule risk	4		Timely land acquisition and equipment procurement activities will be essential to meet tight project development schedules.			
1103	Location risk for fuel supply	4		Close proximity to fuel supply will minimise risk of fuel outages.			
1200	**Economics**						
1203	Cost of transmission of gas to and electricity from plant	4		Optimal configuration of gas and electricity components is essential for economic efficiency.			
1205	Sales of by-products	3			Exploring opportunities for economic enhancement through sales of by-products could reduce the overall operation and maintenance costs of the power plant.		
1208	Transmission line distance	3			Optimisation of new transmission line route and station location will promote efficiency of capital investment		
1209	Gas pipeline distance	4		Capital investment efficiency enhanced by minimising new pipeline routes with associated easement costs			
1211	Efficiency	4		Plant efficiency factor applies over whole of station operational life			
1212	Cogeneration potential	3			Important for maximising value realised from available energy source		
1213	Integration into large users	2				Efficiency gains derived from reduced transmission investment and line losses	

APPENDIX E – Site Selection Analysis

Appendix E
Table 4

Cat/Element Nº	Selection Criteria	Element Weighting	Site					
			Gerquduq Substation/ Process Plant	Khoja Gogerdak Processing Plant	Qarakent Pumping Station	Sheberghan Industrial Park	MMI Fertiliser Works	Mazar-e-Sharif Substation
100	**Land Availability and Suitability**							
101	Land availability	**5**	4	3	2	2	3	4
102	Plot size	**5**	4	4	2	3	4	3
103	Clear ownership/title	**5**	4	3	1	2	3	2
104	Actual or potential land disputes	**4**	4	3	1	2	3	4
106	Potential for future expansion	**3**	4	4	2	3	3	2
108	Buffer zones	**3**	4	4	2	2	3	1
109	Land utilisation	**4**	4	2	1	2	2	3
115	Pipeline Easements	**5**	4	4	3	1	3	1
116	Site accessibility for staff and services	**2**	3	2	3	4	4	4
117	Dust storm frequency and intensity	**1**	2	2	2	2	2	2
120	Temperature ranges T5 and T95	**3**	3	3	2	2	2	2
125	Flooding potential	**3**	4	4	3	3	3	3
	Raw Subtotal	**172**	**165**	**141**	**83**	**96**	**128**	**112**
	Moderated Subtotal		**3.84**	**3.28**	**1.93**	**2.23**	**2.98**	**2.60**
200	**Transmission Grid Connection**							
201	Existing Transmission System	**4**	4	3	3	1	2	4
202	Planned Transmission System	**4**	4	2	2	2	1	4
	Subtotal	**32**	**32**	**20**	**20**	**12**	**12**	**32**
	Moderated Subtotal		**4.00**	**2.50**	**2.50**	**1.50**	**1.50**	**4.00**
300	**Water Supply**							
301	Distance to surface water supply	**2**	1	1	1	1	3	1
304	Ground Water Availability	**4**	4	2	4	3	3	2
306	Water Quality	**2**	3	3	3	3	2	3
307	Water Rights	**4**	3	3	3	1	3	1
	Subtotal	**48**	**36**	**28**	**36**	**24**	**34**	**20**
	Moderated Subtotal		**3.00**	**2.33**	**3.00**	**2.00**	**2.83**	**1.67**
400	**Fuel Supply**							
401	Back up fuel	**4**	4	4	4	2	1	1
403	Pressure of NG	**3**	4	2	2	2	1	1
	Subtotal	**28**	**28**	**22**	**22**	**14**	**7**	**7**
	Moderated Subtotal		**4.00**	**3.14**	**3.14**	**2.00**	**1.00**	**1.00**
500	**Construction Cost Factors**							
502	Local infrastructure facilities	**3**	3	2	2	3	3	2
503	Site benching requirements / topography	**2**	3	2	3	3	3	3
506	Construction accommodation requirements	**1**	3	3	3	4	3	4
507	Construction laydown areas and secure storage	**2**	4	4	1	2	3	2
510	Domestic delivery routes	**3**	2	3	2	3	3	4
518	Dust filtration requirements	**3**	2	2	2	2	2	2
	Subtotal	**56**	**38**	**36**	**29**	**38**	**39**	**38**
	Moderated Subtotal		**2.71**	**2.57**	**2.07**	**2.71**	**2.79**	**2.71**
600	**Civil Facilities and Site Development**							
611	Roadways	**3**	4	2	3	4	3	3
613	Airports	**2**	3	3	3	3	4	4
	Subtotal	**20**	**18**	**12**	**15**	**18**	**17**	**17**
	Moderated Subtotal		**3.60**	**2.40**	**3.00**	**3.60**	**3.40**	**3.40**
700	**Environmental Considerations**							
702	Air pollution impact	**4**	4	4	3	2	3	2
703	Air shed issues	**4**	4	4	3	3	2	2
704	Noise control	**4**	4	4	3	2	3	2
705	Vibration	**4**	4	4	3	2	3	2
707	Water resource conflicts	**4**	3	3	3	3	1	0
708	Existing and potential land use	**3**	4	3	2	4	4	2

Appendix E
Table 4

Cat/Element Nº	Selection Criteria	Element Weighting	Site					
			Gerquduq Substation/ Process Plant	Khoja Gogerdak Processing Plant	Qarakent Pumping Station	Sheberghan Industrial Park	MMI Fertiliser Works	Mazar-e-Sharif Substation
709	Ecological impact	4	4	3	3	4	4	4
711	Aesthetics / Visual buffering	3	4	4	1	1	4	1
714	Predominant wind direction	3	4	4	3	2	3	2
	Subtotal	**132**	**128**	**121**	**90**	**85**	**97**	**63**
	Moderated Subtotal		**3.88**	**3.67**	**2.73**	**2.58**	**2.94**	**1.91**
800	**Social Considerations**							
801	Political acceptance	5	4	3	1	3	3	2
802	Heat sink for heating from power station	2	1	1	1	4	1	4
803	Proximity of available workforce	3	3	3	3	4	4	4
804	Ongoing international support requirements	3	2	2	2	2	3	3
805	Technology transfer opportunities	3	4	4	4	4	3	3
806	Future township expansion	3	1	1	1	4	2	3
807	Socio-political issues	4	4	4	2	3	4	2
808	Access to first aid and medical	1	1	1	1	3	3	3
809	Local acceptance	4	4	4	1	3	3	2
810	Historic / cultural interest	3	4	4	4	3	4	4
811	Displacement of inhabitants	4	4	4	1	2	4	2
812	Ease of land acquisition	5	4	3	1	2	4	2
	Subtotal	**160**	**133**	**123**	**71**	**119**	**132**	**106**
	Moderated Subtotal		**3.33**	**3.08**	**1.78**	**2.98**	**3.30**	**2.65**
900	**Safety and Security**							
901	Gas line vulnerability	4	4	4	3	2	2	1
903	Power plant vulnerability	3	3	3	3	4	3	3
905	Local fire brigade capability	1	1	1	1	2	1	2
907	Distance to residential areas	3	2	1	2	3	3	3
908	Curfew constraints	2	2	1	2	4	3	3
	Subtotal	**52**	**36**	**31**	**32**	**39**	**33**	**30**
	Moderated Subtotal		**2.77**	**2.38**	**2.46**	**3.00**	**2.54**	**2.31**
1000	**Operations and Maintenance**							
1002	Staffing	2	2	2	2	3	3	3
1004	Local expertise (maintenance contractors)	3	3	3	3	3	2	2
1005	Cathodic protection	3	3	3	3	3	2	2
1008	Site access in adverse weather conditions	3	3	3	3	4	4	4
1010	Training	2	3	3	3	3	4	2
	Subtotal	**52**	**37**	**37**	**37**	**42**	**38**	**34**
	Moderated Subtotal		**2.85**	**2.85**	**2.85**	**3.23**	**2.92**	**2.62**
1100	**Risk**							
1102	Schedule risk	4	4	3	1	2	1	1
1103	Location risk for fuel supply	4	4	4	4	4	2	2
	Subtotal	**32**	**32**	**28**	**20**	**24**	**12**	**12**
	Moderated Subtotal		**4.00**	**3.50**	**2.50**	**3.00**	**1.50**	**1.50**
1200	**Economics**							
1203	Cost of transmission of gas to and electricity from plant	4	4	4	4	3	2	2
1205	Sales of by-products	3	1	1	1	2	3	2
1208	Transmission line distance	3	4	3	3	2	2	4
1209	Gas pipeline distance	4	4	4	4	3	1	1
1211	Efficiency	4	3	3	3	3	3	2
1212	Cogeneration potential	3	1	1	1	3	3	0
1213	Integration into large users	2	1	1	1	2	3	3
	Subtotal	**92**	**64**	**61**	**61**	**61**	**54**	**44**
	Moderated Subtotal		**2.78**	**2.65**	**2.65**	**2.65**	**2.35**	**1.91**

Appendix E
Table 5

Category Nº	Selection Criteria	Category Weighting	Site					
			Gerquduq Substation/ Process Plant	Khoja Gogerdak Processing Plant	Qarakent Pumping Station	Sheberghan Industrial Park	MMI Fertiliser Works	Mazar-e-Sharif Substation
Minimised Capital Cost								
100	Land Availability and Suitability	2.0	7.67	6.56	3.86	4.47	5.95	5.21
200	Transmission Grid Connection	1.5	6.00	3.75	3.75	2.25	2.25	6.00
300	Water Supply	1.5	4.50	3.50	4.50	3.00	4.25	2.50
400	Fuel Supply	2.5	10.00	7.86	7.86	5.00	2.50	2.50
500	Construction Cost Factors	2.0	5.43	5.14	4.14	5.43	5.57	5.43
600	Civil Facilities and Site Development	1.5	5.40	3.60	4.50	5.40	5.10	5.10
700	Environmental Considerations	0.5	1.94	1.83	1.36	1.29	1.47	0.95
800	Social Considerations	0.5	1.66	1.54	0.89	1.49	1.65	1.33
900	Safety and Security	0.5	1.38	1.19	1.23	1.50	1.27	1.15
1000	Operations and Maintenance	0.0	0.00	0.00	0.00	0.00	0.00	0.00
1100	Risk	0.5	2.00	1.75	1.25	1.50	0.75	0.75
1200	Economics	1.5	4.17	3.98	3.98	3.98	3.52	2.87
		Weighted Score	**50.16**	**40.70**	**37.32**	**35.30**	**34.29**	**33.79**
		Site Ranking	**1**	**2**	**3**			
Minimised Capital and Life Cycle Cost								
100	Land Availability and Suitability	2.0	7.67	6.56	3.86	4.47	5.95	5.21
200	Transmission Grid Connection	1.5	6.00	3.75	3.75	2.25	2.25	6.00
300	Water Supply	1.5	4.50	3.50	4.50	3.00	4.25	2.50
400	Fuel Supply	2.5	10.00	7.86	7.86	5.00	2.50	2.50
500	Construction Cost Factors	1.5	4.07	3.86	3.11	4.07	4.18	4.07
600	Civil Facilities and Site Development	1.0	3.60	2.40	3.00	3.60	3.40	3.40
700	Environmental Considerations	0.5	1.94	1.83	1.36	1.29	1.47	0.95
800	Social Considerations	0.5	1.66	1.54	0.89	1.49	1.65	1.33
900	Safety and Security	0.5	1.38	1.19	1.23	1.50	1.27	1.15
1000	Operations and Maintenance	1.5	4.27	4.27	4.27	4.85	4.38	3.92
1100	Risk	1.0	4.00	3.50	2.50	3.00	1.50	1.50
1200	Economics	2.0	5.57	5.30	5.30	5.30	4.70	3.83
		Weighted Score	**54.67**	**45.56**	**41.63**	**39.81**	**37.50**	**36.36**
		Site Ranking	**1**	**2**	**3**			
Shortest Implementation Period								
100	Land Availability and Suitability	3.0	11.51	9.84	5.79	6.70	8.93	7.81
200	Transmission Grid Connection	2.0	8.00	5.00	5.00	3.00	3.00	8.00
300	Water Supply	1.0	3.00	2.33	3.00	2.00	2.83	1.67
400	Fuel Supply	2.5	10.00	7.86	7.86	5.00	2.50	2.50
500	Construction Cost Factors	1.0	2.71	2.57	2.07	2.71	2.79	2.71
600	Civil Facilities and Site Development	1.0	3.60	2.40	3.00	3.60	3.40	3.40
700	Environmental Considerations	1.0	3.88	3.67	2.73	2.58	2.94	1.91
800	Social Considerations	1.0	3.33	3.08	1.78	2.98	3.30	2.65
900	Safety and Security	0.5	1.38	1.19	1.23	1.50	1.27	1.15
1000	Operations and Maintenance	0.0	0.00	0.00	0.00	0.00	0.00	0.00
1100	Risk	1.0	4.00	3.50	2.50	3.00	1.50	1.50
1200	Economics	0.5	1.39	1.33	1.33	1.33	1.17	0.96
		Weighted Score	**52.81**	**42.76**	**36.28**	**34.39**	**33.63**	**34.26**
		Site Ranking	**1**	**2**	**3**			
Most Favourable Environmental and Social Outcome								
100	Land Availability and Suitability	3.0	11.51	9.84	5.79	6.70	8.93	7.81
200	Transmission Grid Connection	0.5	2.00	1.25	1.25	0.75	0.75	2.00
300	Water Supply	3.0	9.00	7.00	9.00	6.00	8.50	5.00
400	Fuel Supply	0.5	2.00	1.57	1.57	1.00	0.50	0.50
500	Construction Cost Factors	0.5	1.36	1.29	1.04	1.36	1.39	1.36
600	Civil Facilities and Site Development	0.5	1.80	1.20	1.50	1.80	1.70	1.70
700	Environmental Considerations	3.5	13.58	12.83	9.55	9.02	10.29	6.68
800	Social Considerations	3.5	11.64	10.76	6.21	10.41	11.55	9.28
900	Safety and Security	2.5	6.92	5.96	6.15	7.50	6.35	5.77
1000	Operations and Maintenance	0.5	1.42	1.42	1.42	1.62	1.46	1.31
1100	Risk	1.5	6.00	5.25	3.75	4.50	2.25	2.25
1200	Economics	1.0	2.78	2.65	2.65	2.65	2.35	1.91
		Weighted Score	**70.01**	**61.03**	**49.88**	**53.30**	**56.02**	**45.57**
		Site Ranking	**1**	**2**			**3**	
Most Favourable Political and Social Risk Outcome								
100	Land Availability and Suitability	0.5	1.92	1.64	0.97	1.12	1.49	1.30
200	Transmission Grid Connection	1.0	4.00	2.50	2.50	1.50	1.50	4.00
300	Water Supply	2.0	6.00	4.67	6.00	4.00	5.67	3.33
400	Fuel Supply	2.0	8.00	6.29	6.29	4.00	2.00	2.00
500	Construction Cost Factors	2.0	5.43	5.14	4.14	5.43	5.57	5.43
600	Civil Facilities and Site Development	1.0	3.60	2.40	3.00	3.60	3.40	3.40
700	Environmental Considerations	0.5	1.94	1.83	1.36	1.29	1.47	0.95
800	Social Considerations	3.0	9.98	9.23	5.33	8.93	9.90	7.95
900	Safety and Security	3.0	8.31	7.15	7.38	9.00	7.62	6.92
1000	Operations and Maintenance	0.5	1.42	1.42	1.42	1.62	1.46	1.31
1100	Risk	3.5	14.00	12.25	8.75	10.50	5.25	5.25
1200	Economics	0.5	1.39	1.33	1.33	1.33	1.17	0.96
		Weighted Score	**65.98**	**55.85**	**48.47**	**52.30**	**46.50**	**42.81**
		Site Ranking	**1**	**2**		**3**		

Appendix E
Table 6

Category Nº	Selection Criteria	Category Weighting	Site					
			Gerquduq Substation/ Process Plant	Khoja Gogerdak Processing Plant	Qarakent Pumping Station	Sheberghan Industrial Park	MMI Fertiliser Works	Mazar-e-Sharif Substation
Categories Unweighted								
100	Land Availability and Suitability	1.0	3.84	3.28	1.93	2.23	2.98	2.60
200	Transmission Grid Connection	1.0	4.00	2.50	2.50	1.50	1.50	4.00
300	Water Supply	1.0	3.00	2.33	3.00	2.00	2.83	1.67
400	Fuel Supply	1.0	4.00	3.14	3.14	2.00	1.00	1.00
500	Construction Cost Factors	1.0	2.71	2.57	2.07	2.71	2.79	2.71
600	Civil Facilities and Site Development	1.0	3.60	2.40	3.00	3.60	3.40	3.40
700	Environmental Considerations	1.0	3.88	3.67	2.73	2.58	2.94	1.91
800	Social Considerations	1.0	3.33	3.08	1.78	2.98	3.30	2.65
900	Safety and Security	1.0	2.77	2.38	2.46	3.00	2.54	2.31
1000	Operations and Maintenance	1.0	2.85	2.85	2.85	3.23	2.92	2.62
1100	Risk	1.0	4.00	3.50	2.50	3.00	1.50	1.50
1200	Economics	1.0	2.78	2.65	2.65	2.65	2.35	1.91
		Weighted Score	**40.75**	**34.35**	**30.61**	**31.48**	**30.04**	**28.28**
		Site Ranking	**1**	**2**		**3**		
Ranking sensitivity to category 900								
100	Land Availability and Suitability	1.0	3.84	3.28	1.93	2.23	2.98	2.60
200	Transmission Grid Connection	1.0	4.00	2.50	2.50	1.50	1.50	4.00
300	Water Supply	1.0	3.00	2.33	3.00	2.00	2.83	1.67
400	Fuel Supply	1.0	4.00	3.14	3.14	2.00	1.00	1.00
500	Construction Cost Factors	1.0	2.71	2.57	2.07	2.71	2.79	2.71
600	Civil Facilities and Site Development	1.0	3.60	2.40	3.00	3.60	3.40	3.40
700	Environmental Considerations	1.0	3.88	3.67	2.73	2.58	2.94	1.91
800	Social Considerations	1.0	3.33	3.08	1.78	2.98	3.30	2.65
900	Safety and Security	41.3	114.37	98.48	101.66	123.90	104.84	95.31
1000	Operations and Maintenance	1.0	2.85	2.85	2.85	3.23	2.92	2.62
1100	Risk	1.0	4.00	3.50	2.50	3.00	1.50	1.50
1200	Economics	1.0	2.78	2.65	2.65	2.65	2.35	1.91
		Weighted Score	**152.35**	**130.45**	**129.81**	**152.38**	**132.34**	**121.28**
		Site Ranking	**2**			**1**		
Ranking sensitivity to categories 900 and 1000								
100	Land Availability and Suitability	1.0	3.84	3.28	1.93	2.23	2.98	2.60
200	Transmission Grid Connection	1.0	4.00	2.50	2.50	1.50	1.50	4.00
300	Water Supply	1.0	3.00	2.33	3.00	2.00	2.83	1.67
400	Fuel Supply	1.0	4.00	3.14	3.14	2.00	1.00	1.00
500	Construction Cost Factors	1.0	2.71	2.57	2.07	2.71	2.79	2.71
600	Civil Facilities and Site Development	1.0	3.60	2.40	3.00	3.60	3.40	3.40
700	Environmental Considerations	1.0	3.88	3.67	2.73	2.58	2.94	1.91
800	Social Considerations	1.0	3.33	3.08	1.78	2.98	3.30	2.65
900	Safety and Security	16.1	44.58	38.39	39.63	48.30	40.87	37.15
1000	Operations and Maintenance	16.1	45.82	45.82	45.82	52.02	47.06	42.11
1100	Risk	1.0	4.00	3.50	2.50	3.00	1.50	1.50
1200	Economics	1.0	2.78	2.65	2.65	2.65	2.35	1.91
		Weighted Score	**125.55**	**113.34**	**110.75**	**125.57**	**112.51**	**102.62**
		Site Ranking	**2**			**1**		

APPENDIX F – Afghanistan Gas Distribution Network

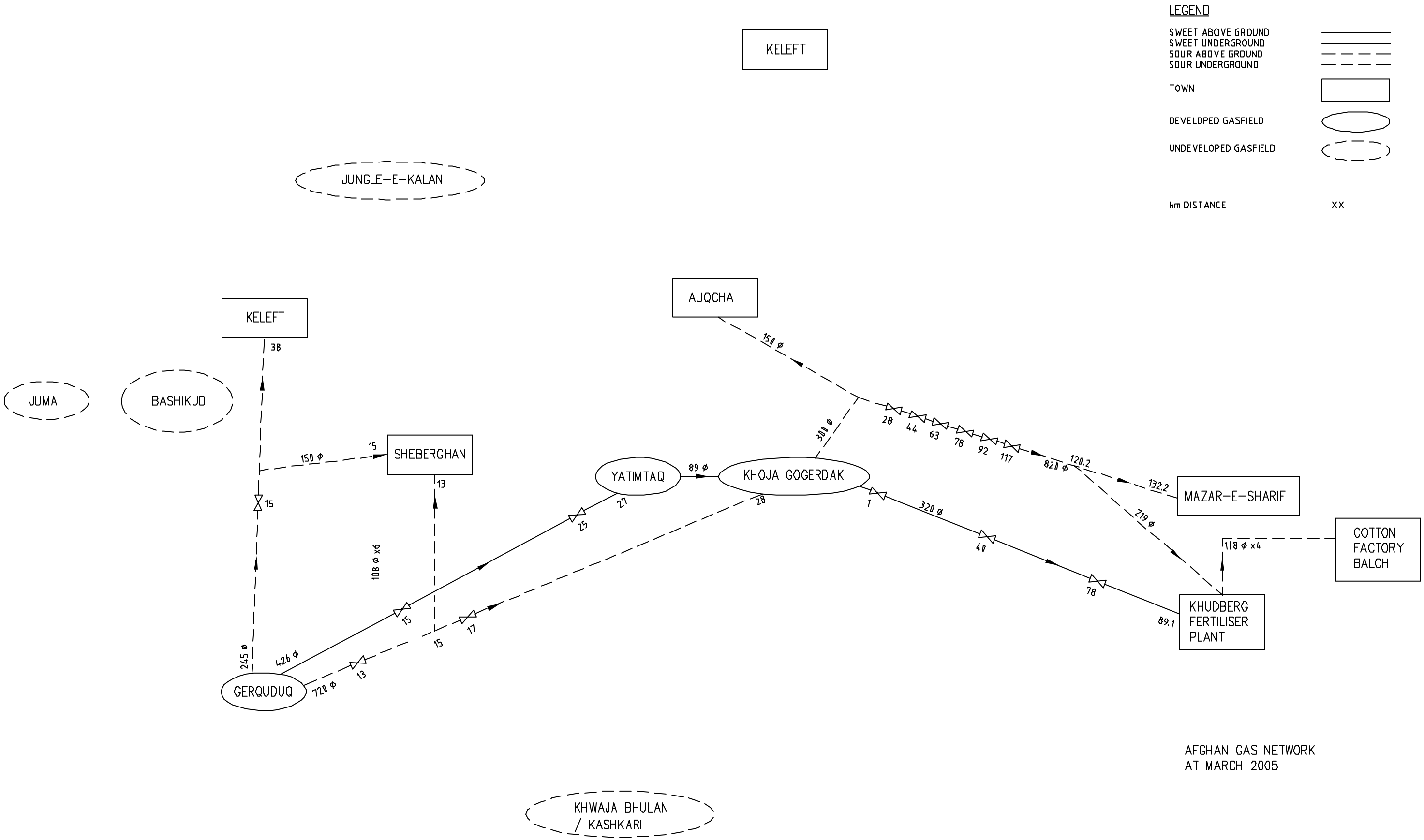

AFGHAN GAS NETWORK
AT MARCH 2005

© Copyright Maunsell Limited, 2003.

This drawing is confidential and shall only be used for the purposes of this project.

No.	BY	DATE	DESCRIPTION	APPD
B	ES	MAY 05	ISSUED FOR FINAL REPORT	
A	ES	APR.05	ISSUED FOR REPORT	WSC

Scales: N.T.S.

THE SIGNING OF THIS TITLE BLOCK CONFIRMS THE DESIGN AND DRAFTING OF THIS PROJECT HAVE BEEN PREPARED AND CHECKED IN ACCORDANCE WITH THE MAUNSELL QUALITY ASSURANCE SYSTEM CERTIFIED TO AS/NZS ISO 9001-2000

DESIGNED	NP	CHECKED	WSC
DRAWN	ES	CHECKED	
APPROVED	WSC	DATE	APR.05

CAD file: H:\MAUsb_112864634-AF Sheberghan Feasibility\CAD\Working\112864634-1121.dwg
Last saved: Thu, 29 May 2008 04:11 pm

maunsell
Maunsell Limited
an AECOM company

AEAI/USAID
AEAI Delivery Order No: 801-MAU-1

SHEBERGHAN POWER STATION FEASIBILITY STUDY
SYSTEM SCHEMATIC
GAS DISTRIBUTION NETWORK (EXISTING)

Status: ISSUE
Drg No: 112864634-1121
Rev: B

APPENDIX G – Gas Composition of Developed Gas Fields

APPENDIX G – Gas Composition of Developed Gas Fields

Composition	Unit	Normal Case	Alternate 1	Alternate 2
Source		Gerquduq Jurassic	Yatimtaq Jurassic	Khoja Gogerdak Jurassic
CH_4	%	89.2-92.2	88.5-95.1	87.2-98.3
H_2S	%	0.18	0.13-3.31	3.23-6.75
CO_2	%	8.79	3.7-5.1	0.9-6.75
CO	%	0	?	?
He	%	0.0068	?	?
H_2	%	0.0879	?	?
Ar	%	0	?	?
O_2	%	0.0451	?	?
N_2	%	0.46	?	?
C_1	%	89.11	?	?
C_2	%	1.06	?	?
C_2H_4	%	0	?	?
C_3	%	0.142	?	?
iC_4	%	0.0280	?	?
nC_4	%	0.0336	?	?
iC_5	%	0.0107	?	?
nC_5	%	0.0080	?	?
C_6+	%	0.0349	?	?
$d^{13}C_1$	per mil	-31.14	?	?
dDC_1	per mil	-157.5	?	?
$d^{13}C_2$	per mil	-20.72	?	?
$d^{13}C_3$	per mil	-19.72	?	?

APPENDIX H –Technology Selection Financial Analysis

Sheberghan Power Project
Power Plant Comparison

Project Constraints			
Site elevation	m amsl	480	*t.b.c.
Average annual ambient air temp.	deg C	16.5	*t.b.c.
Design Maximum	deg C	45	*t.b.c.
Design Minimum	deg C	-20	*t.b.c.
Average annual relative humidity	%	30%	*t.b.c.
Economic life	years	20	Power station life
Discount rate	%	15.0	Loan rate from AEAI
Annuity factor	-	6.26	Calculated
Gas cost	$/ GJ	4.50	Global market rate of natural gas
Fuel Oil Cost	$/lt	0.620	Tryco - Diesel importer for Kabul power station
Water cost	$/tonne	2.00	*t.b.c. by AEAI
Gas Calorific Value (HHV)	MJ/Nm^3	36.52	Calculated by Hysys
Gas Calorific Value (LHV)	MJ/Nm^3	33.2	
H2S	%	0.18	O'Connor Report
CO2	%	8.79	O'Connor Report
Fuel Oil Calorific Value (LHV)	MJ/m3	37,153	Marks' Handbook - API degrees = 30

Generation Capacity (nominal)	**MWe - ISO**	**100**												
				CCGE - Combined Cycle Gas Engine							CCGT - Combined Cycle Gas Turbine			
Generation Unit Options		Gas Recip.		Duel Fuel Recip.	CCGE		Open Cycle Gas Turbine				CCGT Industrial			
Manufacturer		Caterpillar	Wartsila	Wartsila	Wartsila	Solar	Siemens	Pratt & Whitney	General Electric	General Elec.	Solar	Siemens	General Elec.	General Elec.
Type		Recip Gas	Recip Gas	Recip. Duel Fuel	Recip Gas	OCGT	OCGT	OCGT	OCGT	OCGT	CCGT	CCGT	CCGT	CCGT
Model		GCM34	20VG34SG	W18V50DF	20VG34SG	Titan 130	Cyclone	FT8	LM600 Sprint	PG6581(B)	STAC 130	CC10B-1	S-106B	S-206B
Output per Unit	MWe - ISO	6.57	8.73	16.64	9.40	14.3	12.9	25.5	42.4	42.1	17.7	36.1	64.3	130.7
Number of Units		16	12	6	11	7	8	4	3	2	6.0	3	2	1
	MWe - ISO	105.1	104.8	99.8	110.6	99.8	103.2	102.0	127.1	84.2	106.2	108.3	128.6	130.7
De-rating due to Temperature		0.996	0.996	0.996	0.996	0.967	0.967	0.967	0.967	0.967	0.967	0.967	0.967	0.967
De-rating due to Altitude		1.00	1.00	1.00	1.00	0.95	0.95	0.95	0.95	0.95	0.95	0.95	0.95	0.95
Gross Total Output	MWe - Site	104.7	104.3	99.4	110.2	91.6	94.8	93.7	116.7	77.4	97.6	99.5	118.1	120.1
Steam Units	MWe	-	-	-	8.0	-	-	-		-	22.2	36.0	48.0	49.0
Performance degradation factor	%	0.5%	0.5%	0.5%	0.75%	1%	1%	1%	1%	1%	2.0%	2.0%	2.0%	2.0%
Parasitic Load	MWe	1.9	1.0	1.0	1.5	1.0	1.0	1.0	-	1.0	2.0	2.0	2.4	2.4
Gas Compressor power consumption	MW	-	-	-	-	1.1	1.4	1.4	1.3	1.3	1.2	1.0	1.2	1.3
Net Total Output	MWe	102.3	102.8	97.9	107.8	89.7	91.5	90.4	114.3	74.3	92.6	94.6	112.3	114.1
Unit availability		94.7%	94.7%	94.7%	92.0%	92.4%	92.4%	93.2%	93.2%	93.2%	90.6%	90.6%	90.6%	90.6%
Net Annual Generation	MWh/y	848,587	853,001	812,454	869,115	725,713	740,540	738,070	933,081	606,701	734,530	750,760	890,890	905,464
Delivery FOB	months	8	8	10	8	11	12	8	8	11	14	14	13	13
Transport	months	1	1	1	1	1	1	1	1	1	1	1	1	1
Installation	months	4	4	5	4	1	5	9	3	6	16	16	16	16
	months	13	13	16	13	13	18	18	12	18	31	31	30	30
Installed Cost	US$ ('000s)	65,772	73,385	88,222	92,426	72,072	74,400	126,980	86,305	73,171	108,360	102,900	107,128	101,027
	US $/kWe	628	703	887	839	787	785	1,356	739	946	1,111	1,034	907	841
Fuel Requirements														
Heat Rate	kJ/kWh	8273	8,150	8,000	8,150	10,280.0	9,943	9,772	8,881	11,290	10,280.0	9,943	11290	11290
Fuel consumption	MWt	241.6	237.2	221.8	232.3	284.8	285.0	276.8	313.5	264.1	239.9	199.7	252.8	256.2
Gas Consumption	m3/s	7.28	7.14	6.62	7.00	8.58	8.59	8.34	9.44	7.95	7.22	6.01	7.61	7.72
	m3/h	26,195	25,717	23,814	25,186	30,886	30,907	30,011	33,994	28,633	26,010	21,653	27,409	27,783
Gas Cost	US$ ('000s) / y	35,711	35,060	32,467	33,358	41,085	41,113	40,266	45,610	38,418	33,924	28,242	35,749	36,237
Pilot Fuel Percentage	%	-	-	1.0%	-	-	-	-		-	-	-	-	-
Fuel Oil Consumption	m3/h	-	-	0.21	-	-	-	-		-	-	-	-	-
Fuel Oil Cost	US$ ('000s) / y	-	-	1,106	-	-	-	-		-	-	-	-	-
Fuel Cost Total	US$ ('000s) / y	35,711	35,060	33,572	33,358	41,085	41,113	40,266	45,610	38,418	33,924	28,242	35,749	36,237
Gas Delivery Pressure	bar g	5.0	5.0	5.0	5.0	25.0	25.0	32.0	25.0	20.7	25.0	25.0	20.7	20.7
Compressor Cost	US$ ('000s)	-	-	-	-	3,000	3,000	3,500	3,000	2,800	3,000	3,000	3,000	3,000
Operations and Maintenance														
Non-Fuel O&M	US$ ('000s) / y	10,566	9,204	9,087	9,251	5,040	5,924	5,905	9,797	4,854	6,244	6,381	7,573	7,696
Water Consumption	tonne/y	20	20	21	161,184	20	20	20	20	20	440,479	714,290	952,387	972,229
Water Cost	US$ ('000s) / y	0.0	0.0	0.0	322.4	0.0	0.0	0.0	0.0	0.0	881.0	1,428.6	1,904.8	1,944.5
Compressor O&M	US$ ('000s) / y	-	-	-	-	129	167	162	156	155	140	117	148	150
Unit Costs														
Non-Fuel O&M unit cost	US c/kWh	1.25	1.08	1.12	1.06	0.69	0.80	0.80	1.05	0.80	0.85	0.85	0.85	0.85
Water unit cost	US c/kWh	0.00	0.00	0.00	0.04	0.00	0.00	0.00	-	0.00	0.12	0.19	0.21	0.21
Compressor unit cost	US c/kWh	-	-	-	-	0.02	0.02	0.02	0.02	0.03	0.02	0.02	0.02	0.02
Fuel unit cost	US c/kWh	4.21	4.11	4.13	3.84	5.66	5.55	5.46	4.89	6.33	4.62	3.76	4.01	4.00
Total O&M Cost	US c/kWh	5.45	5.19	5.25	4.94	6.37	6.37	6.28	5.95	7.16	5.61	4.82	5.09	5.08
Financial														
Installed Equipment Cost (IC)	US$ ('000s)	65,772	73,385	88,222	92,426	75,072	77,400	130,480	89,305	75,971	111,360	105,900	110,128	104,027

Sheberghan Power Project
Power Plant Comparison

Project Management (5.0% IC)	US$ ('000s)	3,289	3,669	4,411	4,621	3,754	3,870	6,524	4,465	3,799	5,568	5,295	5,506	5,201
Owners Costs (1.5% IC)	US$ ('000s)	987	1,101	1,323	1,386	1,126	1,161	1,957	1,340	1,140	1,670	1,589	1,652	1,560
Insurance (1.5% IC)	US$ ('000s)	987	1,101	1,323	1,386	1,126	1,161	1,957	1,340	1,140	1,670	1,589	1,652	1,560
Spares (0.5% IC)	US$ ('000s)	329	367	441	462	375	387	652	447	380	557	530	551	520
Construction Interest (on 1/2 IC)	US$ ('000s)	2,140	2,387	3,464	3,007	960	3,039	8,744	2,310	3,501	13,228	12,579	13,082	12,357
Contingency (10%)	US$ ('000s)	7,350	8,201	9,919	10,329	8,241	8,702	15,031	9,921	8,593	13,405	12,748	13,257	12,523
Capital Expenditure	US$ ('000s)	73,502	82,010	99,186	103,289	82,413	87,018	150,314	99,206	85,929	134,053	127,481	132,570	125,226
Annualised Capital Cost	US$ ('000s) / y	11,743	13,102	15,846	16,502	13,166	13,902	24,014	15,849	13,728	21,417	20,367	21,180	20,006
Equivalent Capital Cost	US c/kWh	1.38	1.54	1.95	1.90	1.81	1.88	3.25	1.70	2.26	2.92	2.71	2.38	2.21
O&M	US c/kWh	5.45	5.19	5.25	4.94	6.37	6.37	6.28	5.95	7.16	5.61	4.82	5.09	5.08
Effective Power Cost	US c/kWh	6.84	6.73	7.20	6.84	8.19	8.25	9.53	7.65	9.42	8.52	7.53	7.47	7.29

Notes
Currency conversion (2004 yearly av.) US$/Euro 0.779

Sheberghan Power Project
Power Plant Comparison

Project Constraints			
Site elevation	m amsl	480	*t.b.c.
Average annual ambient air temp.	deg C	16.5	*t.b.c.
Design Maximum	deg C	45	*t.b.c.
Design Minimum	deg C	-20	*t.b.c.
Average annual relative humidity	%	30%	*t.b.c.
Economic life	years	20	Power station life
Discount rate	%	15.0	Loan rate from AEAI
Annuity factor	-	6.26	Calculated
Gas cost	$/ GJ	4.50	Global market rate of natural gas
Fuel Oil Cost	$/lt	0.620	Tryco - Diesel importer for Kabul power station
Water cost	$/tonne	2.00	*t.b.c. by AEAI
Gas Calorific Value (HHV)	MJ/Nm^3	36.52	Calculated by Hysys
Gas Calorific Value (LHV)	MJ/Nm^3	33.2	
H2S	%	0.18	O'Connor Report
CO2	%	8.79	O'Connor Report
Fuel Oil Calorific Value (LHV)	MJ/m3	37,153	Marks' Handbook - API degrees = 30
Generation Capacity (nominal)	**MWe - ISO**	**100**	

					CCGE - Combined Cycle Gas Engine						CCGT - Combined Cycle Gas Turbine			
Generation Unit Options		Gas Recip.		Duel Fuel Recip.	CCGE		Open Cycle Gas Turbine				CCGT Industrial			
Manufacturer		Caterpillar	Wartsila	Wartsila	Wartsila	Solar	Siemens	Pratt & Whitney	General Electric	General Elec.	Solar	Siemens	General Elec.	General Elec.
Type		Recip Gas	Recip Gas	Recip. Duel Fuel	Recip Gas	OCGT	OCGT	OCGT	OCGT	OCGT	CCGT	CCGT	CCGT	CCGT
Model		GCM34	20VG34SG	W18V50DF	20VG34SG	Titan 130	Cyclone	FT8	LM600 Sprint	PG6581(B)	STAC 130	CC10B-1	S-106B	S-206B
Output per Unit	MWe - ISO	6.57	8.73	16.64	10.73	14.3	12.9	25.5	42.4	42.1	17.7	36.1	64.3	130.7
Number of Units		5	4	2	3	2	2	1	1	1	2.0	1	1	1
	MWe - ISO	32.9	34.9	33.3	34.4	28.5	25.8	25.5	42.4	42.1	35.4	36.1	64.3	130.7
De-rating due to Temperature		0.996	0.996	0.996	0.996	0.967	0.967	0.967	0.967	0.967	0.967	0.967	0.967	0.967
De-rating due to Altitude		1.00	1.00	1.00	1.00	0.95	0.95	0.95	0.95	0.95	0.95	0.95	0.95	0.95
Gross Total Output	MWe - Site	32.7	34.8	33.1	34.3	26.2	23.7	23.4	38.9	38.7	32.5	33.2	59.1	120.1
Steam Units	MWe	-	-	-	8.0	-	-	-		-	7.4	12.0	24.0	49.0
Performance degradation factor	%	0.5%	0.5%	0.5%	0.75%	1%	1%	1%	1%	1%	2.0%	2.0%	2.0%	2.0%
Parasitic Load	MWe	1.9	1.0	1.0	1.5	1.0	1.0	1.0	-	1.0	0.7	0.7	1.2	2.4
Gas Compressor power consumption	MW	-	-	-	-	0.3	0.3	0.3	1.3	0.6	0.4	0.3	0.6	1.3
Net Total Output	MWe	30.7	33.6	32.0	32.6	25.6	22.1	21.9	37.2	36.7	30.9	31.5	56.1	114.1
Unit availability		94.7%	94.7%	94.7%	92.0%	92.4%	92.4%	93.2%	93.2%	93.2%	90.6%	90.6%	90.6%	90.6%
Net Annual Generation	MWh/y	254,439	278,831	265,315	262,403	207,347	179,125	178,456	304,022	299,309	244,843	250,253	445,445	905,464
Delivery FOB	months	8	8	10	8	11	12	8	8	11	14	14	13	13
Transport	months	1	1	1	1	1	1	1	1	1	1	1	1	1
Installation	months	4	4	5	4	1	5	9	3	6	16	16	16	16
	months	13	13	16	13	13	18	18	12	18	31	31	30	30
Installed Cost	US$ ('000s)	21,241	24,462	29,407	25,207	20,592	18,600	31,745	28,768	36,585	36,120	34,300	53,564	101,027
	US $/kWe	649	703	887	735	787	785	1,356	739	946	1,111	1,034	907	841
Fuel Requirements														
Heat Rate*	kJ/kWh	8273	8,150	8,000	8,150	10,280.0	9,943	9,772	8,881	11,290	10,280.0	9,943	11290	11290
Fuel consumption	MWt	75.5	79.1	73.9	59.9	81.4	71.3	69.2	104.5	132.0	80.0	66.6	126.4	256.2
Gas Consumption	m3/s	2.27	2.38	2.21	1.80	2.45	2.15	2.08	3.15	3.98	2.41	2.00	3.81	7.72
	m3/h	8,186	8,572	7,938	6,491	8,825	7,727	7,503	11,331	14,317	8,670	7,218	13,704	27,783
Gas Cost	US$ ('000s) / y	11,160	11,687	10,822	8,597	11,739	10,278	10,067	15,203	19,209	11,308	9,414	17,875	36,237
Pilot Fuel Percentage	%	-	-	1.0%	-	-	-	-		-	-	-	-	-
Fuel Oil Consumption	m3/h	-	-	0.07	-	-	-	-		-	-	-	-	-
Fuel Oil Cost	US$ ('000s) / y	-	-	369	-	-	-	-		-	-	-	-	-
Fuel Cost Total	US$ ('000s) / y	11,160	11,687	11,191	8,597	11,739	10,278	10,067	15,203	19,209	11,308	9,414	17,875	36,237
Gas Delivery Pressure	bar g	5.0	5.0	5.0	5.0	25.0	25.0	32.0	25.0	20.7	25.0	25.0	20.7	20.7
Compressor Cost	US$ ('000s)	-	-	-	-	3,000	3,000	3,500	3,000	2,800	3,000	3,000	3,000	3,000
Operations and Maintenance														
Non-Fuel O&M	US$ ('000s) / y	3,168	7,546	7,507	7,499	1,440	1,433	1,428	3,192	2,394	2,081	2,127	3,786	7,696
Water Consumption	tonne/y	20	20	21	161,184	20	20	20	20	20	146,826	238,097	476,194	972,229
Water Cost	US$ ('000s) / y	0.0	0.0	0.0	322.4	0.0	0.0	0.0	0.0	0.0	293.7	476.2	952.4	1,944.5
Compressor O&M	US$ ('000s) / y	-	-	-	-	37	42	41	156	77	47	39	74	150
Unit Costs														
Non-Fuel O&M unit cost	US c/kWh	1.25	2.71	2.83	2.86	0.69	0.80	0.80	1.05	0.80	0.85	0.85	0.85	0.85
Water unit cost	US c/kWh	0.00	0.00	0.00	0.12	0.00	0.00	0.00	-	0.00	0.12	0.19	0.21	0.21
Compressor unit cost	US c/kWh	-	-	-	-	0.02	0.02	0.02	0.05	0.03	0.02	0.02	0.02	0.02
Fuel unit cost	US c/kWh	4.39	4.19	4.22	3.28	5.66	5.74	5.64	5.00	6.42	4.62	3.76	4.01	4.00
Total O&M Cost	US c/kWh	5.63	6.90	7.05	6.26	6.37	6.56	6.46	6.10	7.24	5.61	4.82	5.09	5.08
Financial														
Installed Equipment Cost (IC)	US$ ('000s)	21,241	24,462	29,407	25,207	23,592	21,600	35,245	31,768	39,385	39,120	37,300	56,564	104,027

Sheberghan Power Project
Power Plant Comparison

Project Management (5.0% IC)	US$ ('000s)	1,062	1,223	1,470	1,260	1,180	1,080	1,762	1,588	1,969	1,956	1,865	2,828	5,201
Owners Costs (1.5% IC)	US$ ('000s)	319	367	441	378	354	324	529	477	591	587	560	848	1,560
Insurance (1.5% IC)	US$ ('000s)	319	367	441	378	354	324	529	477	591	587	560	848	1,560
Spares (0.5% IC)	US$ ('000s)	106	122	147	126	118	108	176	159	197	196	187	283	520
Construction Interest (on 1/2 IC)	US$ ('000s)	691	796	1,155	820	302	848	2,362	822	1,815	4,647	4,431	6,719	12,357
Contingency (10%)	US$ ('000s)	2,374	2,734	3,306	2,817	2,590	2,428	4,060	3,529	4,455	4,709	4,490	6,809	12,523
Capital Expenditure	US$ ('000s)	23,738	27,337	33,062	28,170	25,899	24,284	40,603	35,291	44,548	47,092	44,901	68,091	125,226
Annualised Capital Cost	US$ ('000s) / y	3,792	4,367	5,282	4,500	4,138	3,880	6,487	5,638	7,117	7,523	7,173	10,878	20,006
Equivalent Capital Cost	US c/kWh	1.49	1.57	1.99	1.72	2.00	2.17	3.63	1.85	2.38	3.07	2.87	2.44	2.21
O&M	US c/kWh	5.63	6.90	7.05	6.26	6.37	6.56	6.46	6.10	7.24	5.61	4.82	5.09	5.08
Effective Power Cost	US c/kWh	7.12	8.46	9.04	7.97	8.37	8.73	10.10	7.96	9.62	8.68	7.68	7.54	7.29

Notes
Currency conversion (2004 yearly av.) US$/Euro 0.779

APPENDIX I – Preliminary Process Flow Diagrams

APPENDIX J - Layouts

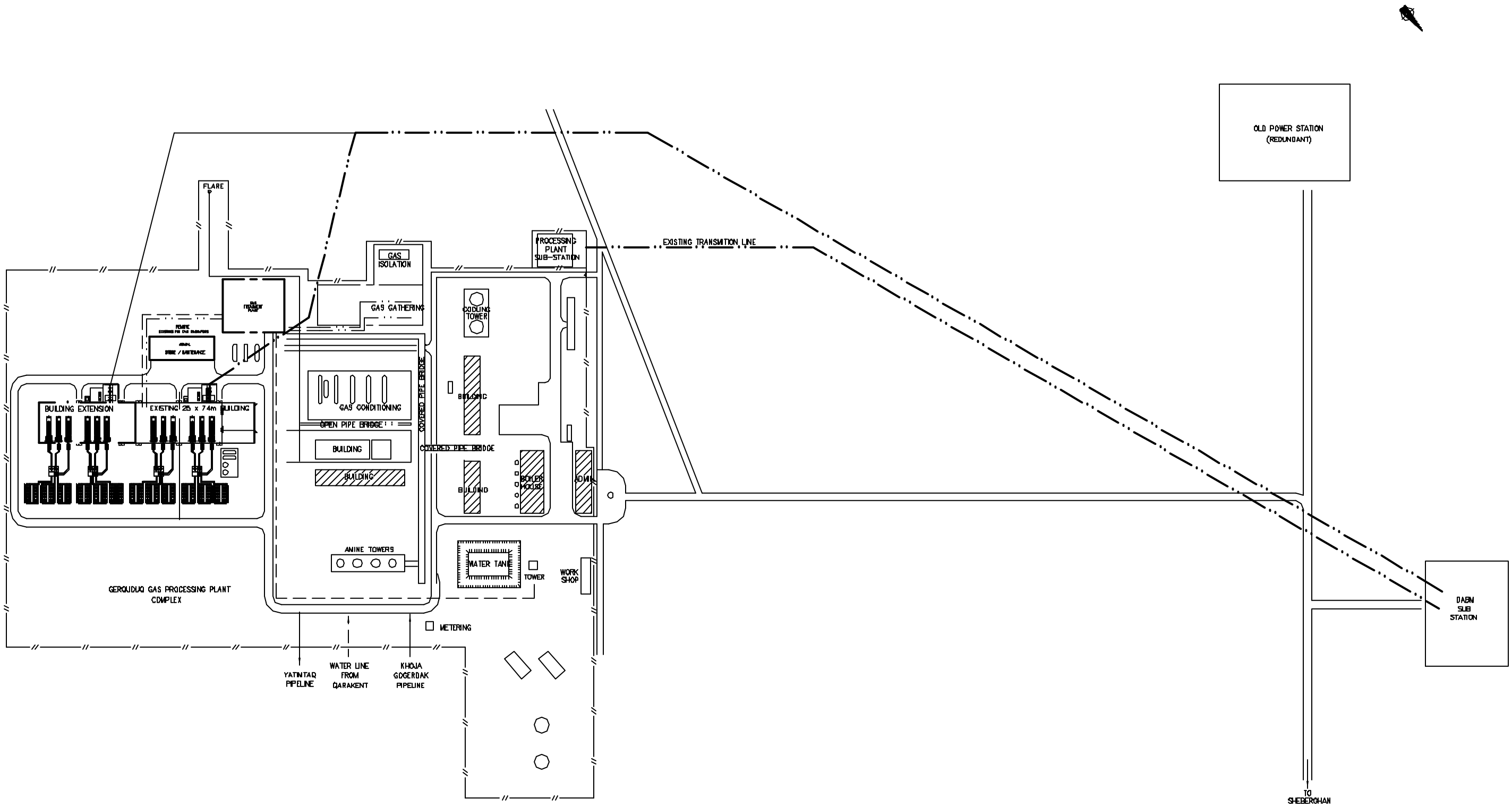

EXACT LOCATION OF EXISTING INFRASTRUCTURE
APPROXIMATE ONLY

© Copyright Maunsell Limited, 2005.

This drawing is confidential and shall only be used for the purposes of this project.

No.	BY	DATE	DESCRIPTION	APPD
C	ES	MAY 05	ISSUED FOR FINAL REPORT	
B	ES	MAY 05	WATER LINE ADDED	WSC
A	ES	APR.05	ISSUED FOR REPORT	

Scales
N.T.S.

THE SIGNING OF THIS TITLE BLOCK CONFIRMS THE DESIGN AND DRAFTING OF THIS PROJECT HAVE BEEN PREPARED AND CHECKED IN ACCORDANCE WITH THE MAUNSELL QUALITY ASSURANCE SYSTEM CERTIFIED TO AS/NZS ISO 9001:2000

DESIGNED	M.P.	CHECKED	W.S.C.
DRAWN	E.S.	CHECKED	
APPROVED	W.S.C.	DATE	APR.05

CAD Path: N:\Data_112\112864634-AF Sheberghan Feasibility\CAD\Working\112864634-1411.dwg
Last saved: Thu, 26 May 2005 04:14 pm

maunsell
Maunsell Limited
An AECOM COMPANY

AEAI/USAID
AEAI Delivery Order No: 801-MAU-1

SHEBERGHAN POWER STATION FEASIBILITY STUDY
SITE LAYOUT
OPTION 2 [IN EXISTING COMPRESSOR BUILDING]

Status: ISSUE
Drg No: 112864634-1411
Rev: C

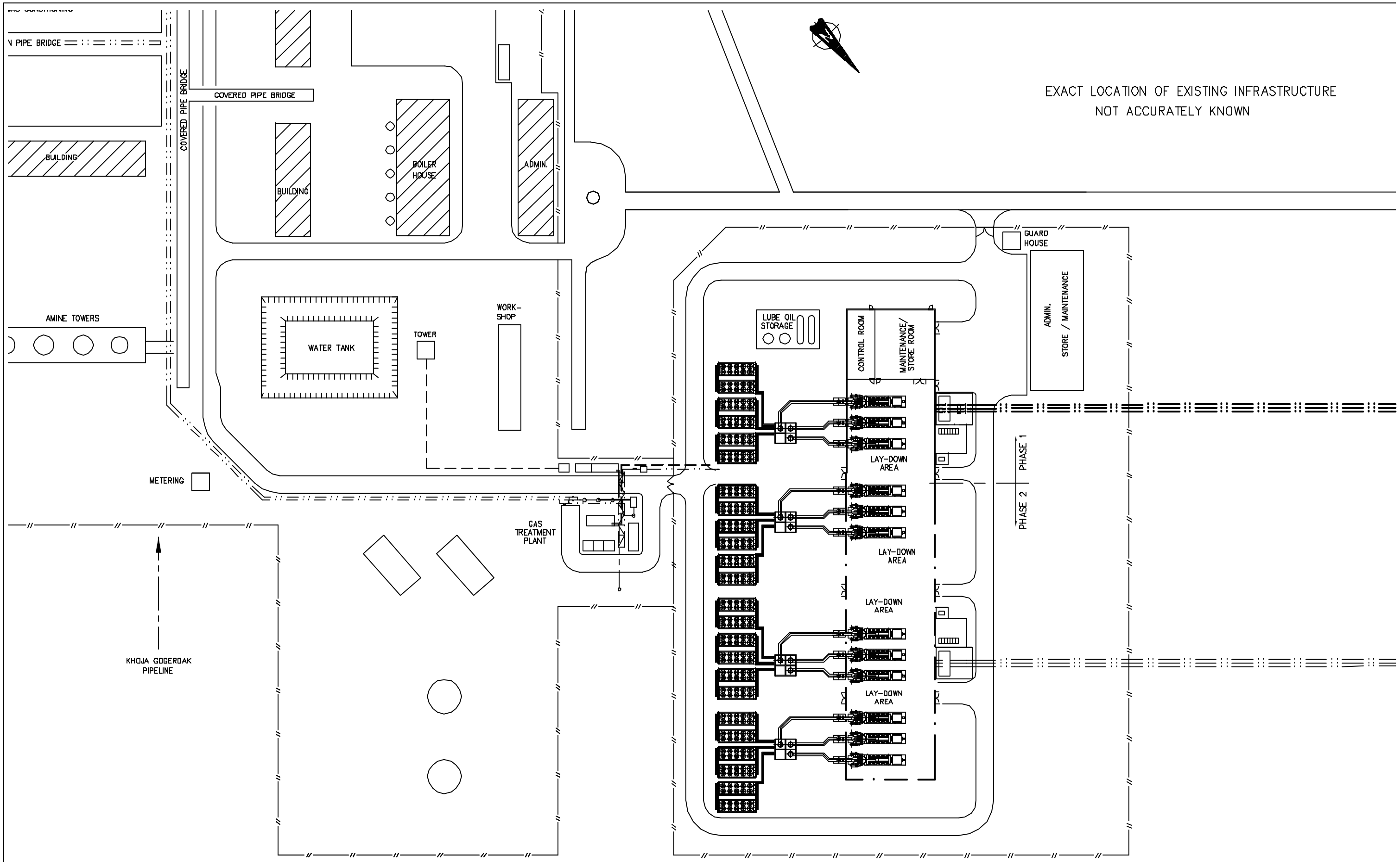

© Copyright Maunsell Limited, 2015.

This drawing is confidential and shall only be used for the purposes of this project.

No.	BY	DATE	DESCRIPTION	APPD
C	ES	MAY 15	ISSUED FOR FINAL REPORT	
B	ES	MAY 15	GAS TREATMENT PLANT RELOCATED	WSC
A	ES	APR.15	ISSUED FOR REPORT	

Scales

1:500

1:1100

THE SIGNING OF THIS TITLE BLOCK CONFIRMS THE DESIGN AND DRAFTING OF THIS PROJECT HAVE BEEN PREPARED AND CHECKED IN ACCORDANCE WITH THE MAUNSELL QUALITY ASSURANCE SYSTEM CERTIFIED TO AS/NZS ISO 9001-2000

DESIGNED	M.P.	CHECKED	V.S.C.
DRAWN	E.S.	CHECKED	
APPROVED	W.S.C.	DATE	APR.15

CAD Path: H:\Data_112864634_AF Sheberghan Feasibility\CAD\Working\112864634-1415.dwg
Last saved: Thu, 28 May 2015 04:18 pm

maunsell

Maunsell Limited
An AECOM Company

AEAI/USAID
AEAI Delivery Order No: 801-MAU-1

SHEBERGHAN POWER STATION FEASIBILITY STUDY

PLANT, EQUIPMENT AND BASIC PIPING LAYOUT
POWER STATION
OPTION 1 | NEW BUILDING |

Status	Drg No.	Rev.
ISSUE	112864634-1415	C

EXACT LOCATION OF EXISTING INFRASTRUCTURE
NOT ACCURATELY KNOWN

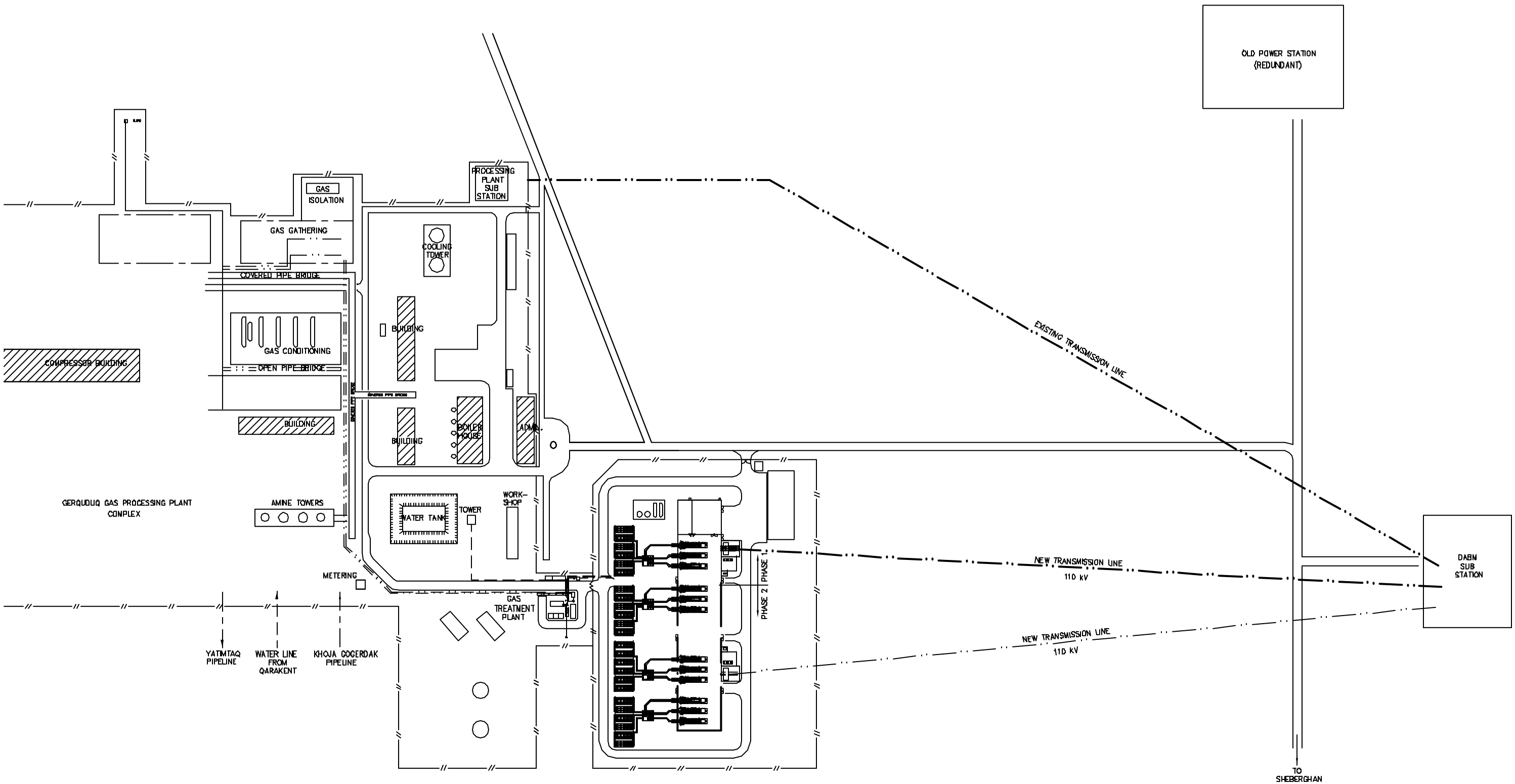

GREENFIELD POWER STATION SITE

© Copyright Maunsell Limited, 2005.

This drawing is confidential and shall only be used for the purposes of this project.

No.	BY	DATE	DESCRIPTION	APPD
C	ES	MAY 05	ISSUED FOR FINAL REPORT	
B	ES	MAY 05	GAS TREATMENT PLANT RELOCATED	WSC
A	ES	APR.05	ISSUED FOR REPORT	

Scales
N.T.S.

THE SIGNING OF THIS TITLE BLOCK CONFIRMS THE DESIGN AND DRAFTING OF THIS PROJECT HAVE BEEN PREPARED AND CHECKED IN ACCORDANCE WITH THE MAUNSELL QUALITY ASSURANCE SYSTEM CERTIFIED TO AS/NZS ISO 9001-2000

DESIGNED	M.P.	CHECKED	W.S.C.
DRAWN	E.S.	CHECKED	
APPROVED	W.S.C.	DATE	APR.05

CAD Path: M:\Data_112\112864634-AF Sheberghan Feasibility\CAD\Working\112864634-1414.dwg
Last saved: Thu, 26 May 2005 04:15 pm

maunsell
Maunsell Limited
AN AECOM COMPANY

AEAI/USAID
AEAI Delivery Order No: 801-MAU-1

SHEBERGHAN POWER STATION FEASIBILITY STUDY

SITE LAYOUT
OPTION 1 | NEW BUILDING |

Status	Drg No	Rev.
ISSUE	112864634-1414	C

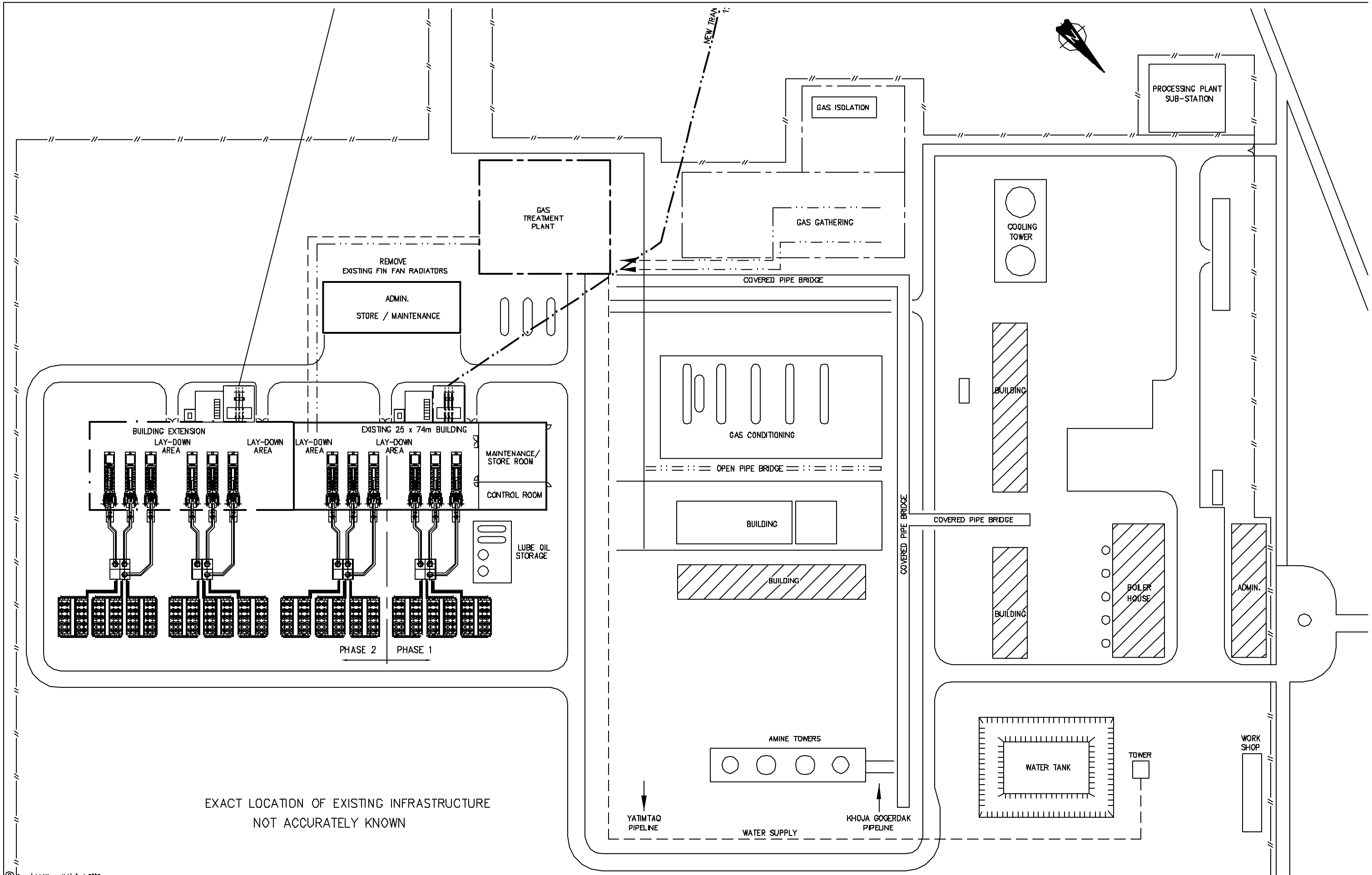

© Copyright Maunsell Limited, 2005.

This drawing is confidential and shall only be used for the purposes of this project.

No.	BY	DATE	DESCRIPTION	APPD
C	ES	MAY 05	ISSUED FOR FINAL REPORT	
B	ES	MAY 05	WATER LINE ADDED, LUBE OIL STORAGE RELOCATED	WSC
A	ES	APR.05	ISSUED FOR REPORT	

Scales
1:500
1:1000

THE SIGNING OF THIS TITLE BLOCK CONFIRMS THE DESIGN AND DRAFTING OF THIS PROJECT HAVE BEEN PREPARED AND CHECKED IN ACCORDANCE WITH THE MAUNSELL QUALITY ASSURANCE SYSTEM CERTIFIED TO AS/NZS ISO 9001:2000

DESIGNED	M.P.	CHECKED	W.S.C.
DRAWN	E.S.	CHECKED	
APPROVED	W.S.C.	DATE	APR.05

CAD Path: N:\Cad_112864634\112864634-AF Sheberghan Feasibility\CAD\Working\112864634-1412.dwg
Last saved: Thu, 26 May 2005 04:15 pm

maunsell
Maunsell Limited
AN AECOM COMPANY

AEAI/USAID
AEAI Delivery Order No: 801-MAU-1

SHEBERGHAN POWER STATION FEASIBILITY STUDY

PLANT, EQUIPMENT AND BASIC PIPING LAYOUT
POWER STATION
OPTION 2 | IN EXISTING COMPRESSOR BUILDING |

Status: ISSUE
Drg No: 112864634-1412
Rev: C

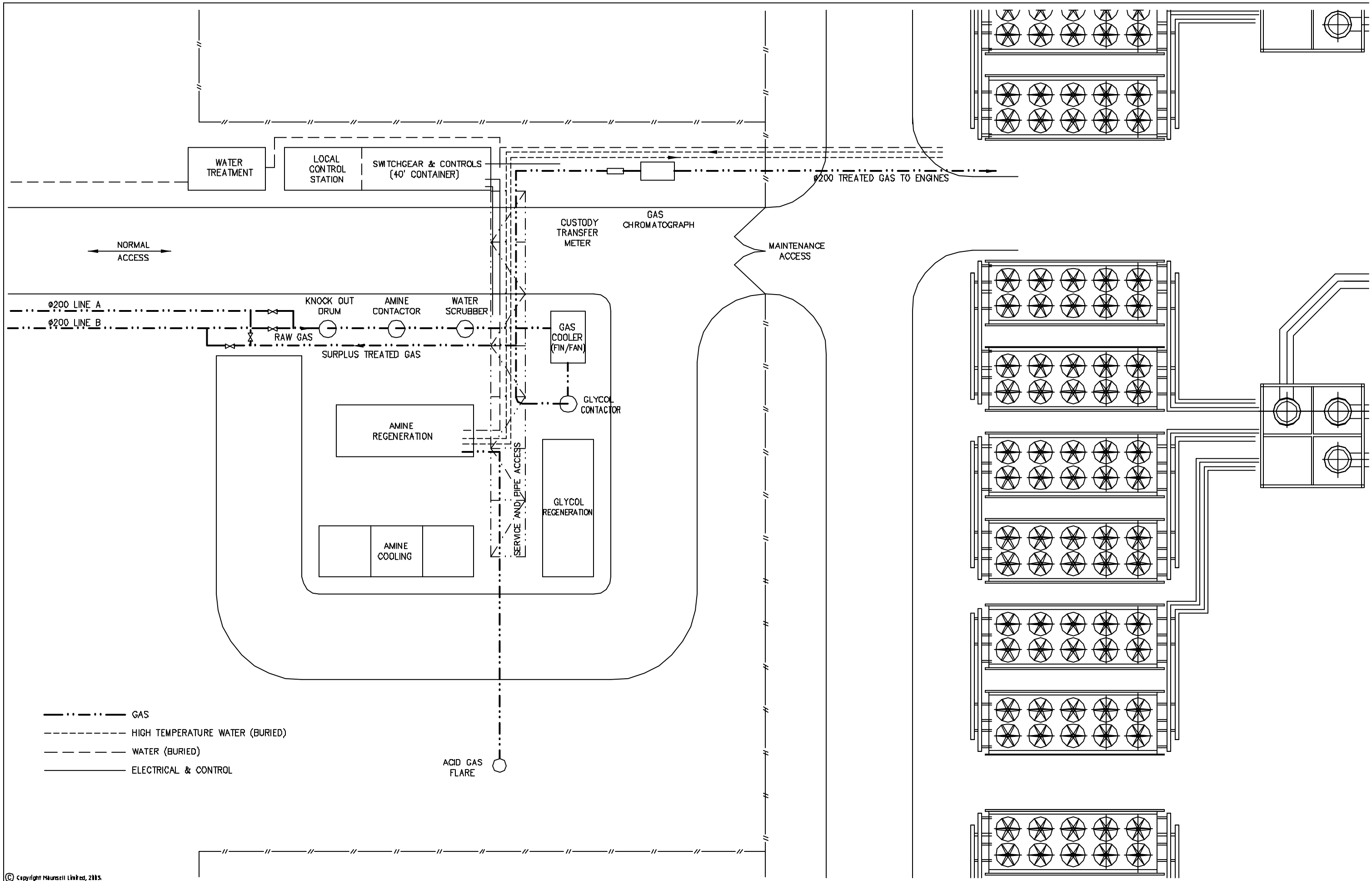

© Copyright Maunsell Limited, 2005.

This drawing is confidential and shall only be used for the purposes of this project.

No.	BY	DATE	DESCRIPTION	APPD
B	ES	MAY 05	ISSUED FOR FINAL REPORT	
A	ES	APR 05	ISSUED FOR REPORT	WSC

Scales
1:100
1:200

THE SIGNING OF THIS TITLE BLOCK CONFIRMS THE DESIGN AND DRAFTING OF THIS PROJECT HAVE BEEN PREPARED AND CHECKED IN ACCORDANCE WITH THE MAUNSELL QUALITY ASSURANCE SYSTEM CERTIFIED TO AS/NZS ISO 9001-2000

DESIGNED	M.P.	CHECKED	W.S.C.
DRAWN	E.S.	CHECKED	
APPROVED	W.S.C.	DATE	APR 05

CAD Ref: M:\Dept_112\112864634-AF Sheberghan Feasibility\CAD\Working\112864634-1416.dwg
Last saved: Thu, 28 May 2005 04:17 pm

maunsell
Maunsell Limited
An AECOM COMPANY

AEAI/USAID
AEAI Delivery Order No: 801-MAU-1

SHEBERGHAN POWER STATION FEASIBILITY STUDY

PLANT, EQUIPMENT AND BASIC PIPING LAYOUT
GAS TREATMENT PLANT
OPTION 1 | NEW POWER STATION BUILDING |

Status	Drg No.	Rev.
ISSUE	112864634-1416	B

APPENDIX K – Process Flow Diagrams

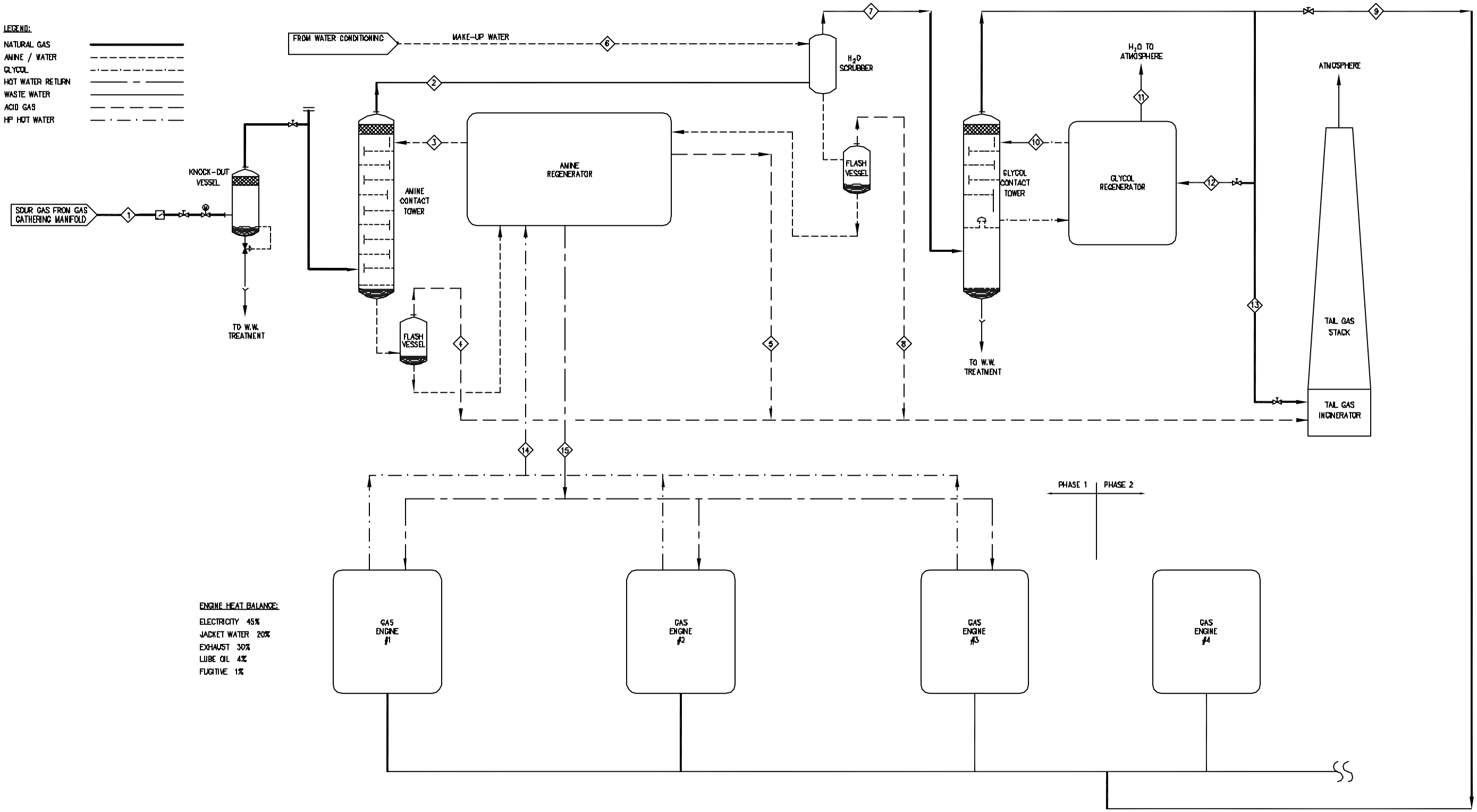

NORMAL OPERATION

	1	2	3	4	5	6	7	8	9	10	11	12	13	14	15
FLUID	SOUR GAS	WET GAS	AMINE	FLASH GAS	ACID GAS	WATER	WET GAS	FLASH GAS	TREATED GAS	GLYCOL	WATER VAPOUR	TREATED GAS	FUEL GAS	HTHW SUPPLY	HTHW RETURN
TEMPERATURE (°C)	48.0	48.6	48.0	67.8	60.0	21.1	47.4	48.1	32.6	32.5	88.5	32.6	32.6	140	120
PRESSURE (Barg)	20.0	19.0	19.7	5.2	0.3	0.5	19.0	0.5	18.0	18.5	0.0	18.0	18.0	5.0	4.5
FLOW (T/hr)	22.530	18.71	50.86	0.008	3.124	0.299	18.72	0.0002	19.80	1.2	0.092	18.16	0	200	200
CH_4 (T/hr)	17.149	17.141	0	0.006	0.002	0	17.141	0.0001	17.141	0.0001	0.001	17.451	0	0	0
H_2S (T/hr)	0.073	0.0001	0.013	0	0.073	0	0.0001	0	0.0001	0	0	0.0001	0	0	0
H_2O (T/hr)	0.031	0.11	25.9	0.0003	0.217	0.299	0.12	0	0.0003	0.009	0.092	0.003	0	200	200
CO_2 (T/hr)	4.630	1.797	0.019	0.0018	2.831	0	1.797	0.0001	1.797	0	0	0	0	0	0
OTHER (T/hr)	0.647	0.661	24.928	0.000	0.001	0	0.662	0.000	0.662	1.191	0	0	0	0	0

© Copyright Maunsell Limited, 2003.

This drawing is confidential and shall only be used for the purposes of this project.

No.	BY	DATE	DESCRIPTION	APPD
B	ES	MAY 05	ISSUED FOR FINAL REPORT	
A	PM	MAY 05	ISSUED FOR REPORT	WSC

Scales

N.T.S.

THE SIGNING OF THIS TITLE BLOCK CONFIRMS THE DESIGN AND DRAFTING OF THIS PROJECT HAVE BEEN PREPARED AND CHECKED IN ACCORDANCE WITH THE MAUNSELL QUALITY ASSURANCE SYSTEM CERTIFIED TO AS/NZS ISO 9001-2000

DESIGNED	NP	CHECKED	-
DRAWN	PM	CHECKED	
APPROVED	-	DATE	-

CAD file: H:\Data\t_102864634_AF Sheberghan Feasibility\CAD\Working\102864634-1131.dwg
Last saved: Thu, 29 May 2008 04:13 pm

maunsell

Maunsell Limited
AN AECOM COMPANY

AEAI/USAID
AEAI Delivery Order No: 801-MAU-1

SHEBERGHAN POWER STATION FEASIBILITY STUDY

PROCESS FLOW DIAGRAM (0.18%H_2S)

Status: ISSUE

Drg No: 102864634-1131

Rev: B

APPENDIX L – Heat and Mass Balance

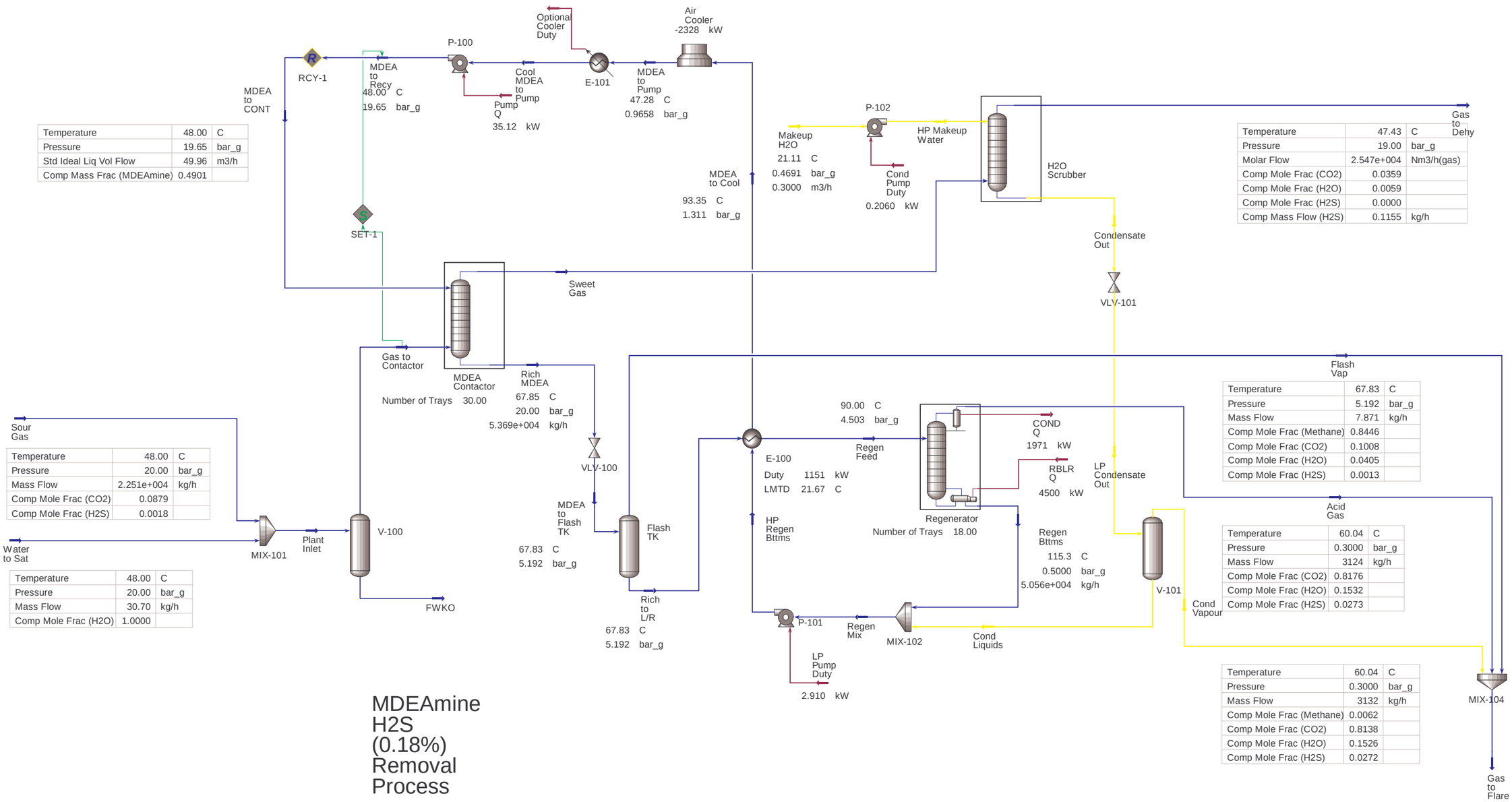

Temperature	48.00	C
Pressure	19.65	bar_g
Std Ideal Liq Vol Flow	49.96	m3/h
Comp Mass Frac (MDEAmine)	0.4901	

Temperature	48.00	C
Pressure	20.00	bar_g
Mass Flow	2.251e+004	kg/h
Comp Mole Frac (CO2)	0.0879	
Comp Mole Frac (H2S)	0.0018	

Temperature	48.00	C
Pressure	20.00	bar_g
Mass Flow	30.70	kg/h
Comp Mole Frac (H2O)	1.0000	

Temperature	47.43	C
Pressure	19.00	bar_g
Molar Flow	2.547e+004	Nm3/h(gas)
Comp Mole Frac (CO2)	0.0359	
Comp Mole Frac (H2O)	0.0059	
Comp Mole Frac (H2S)	0.0000	
Comp Mass Flow (H2S)	0.1155	kg/h

Temperature	67.83	C
Pressure	5.192	bar_g
Mass Flow	7.871	kg/h
Comp Mole Frac (Methane)	0.8446	
Comp Mole Frac (CO2)	0.1008	
Comp Mole Frac (H2O)	0.0405	
Comp Mole Frac (H2S)	0.0013	

Temperature	60.04	C
Pressure	0.3000	bar_g
Mass Flow	3124	kg/h
Comp Mole Frac (CO2)	0.8176	
Comp Mole Frac (H2O)	0.1532	
Comp Mole Frac (H2S)	0.0273	

Temperature	60.04	C
Pressure	0.3000	bar_g
Mass Flow	3132	kg/h
Comp Mole Frac (Methane)	0.0062	
Comp Mole Frac (CO2)	0.8138	
Comp Mole Frac (H2O)	0.1526	
Comp Mole Frac (H2S)	0.0272	

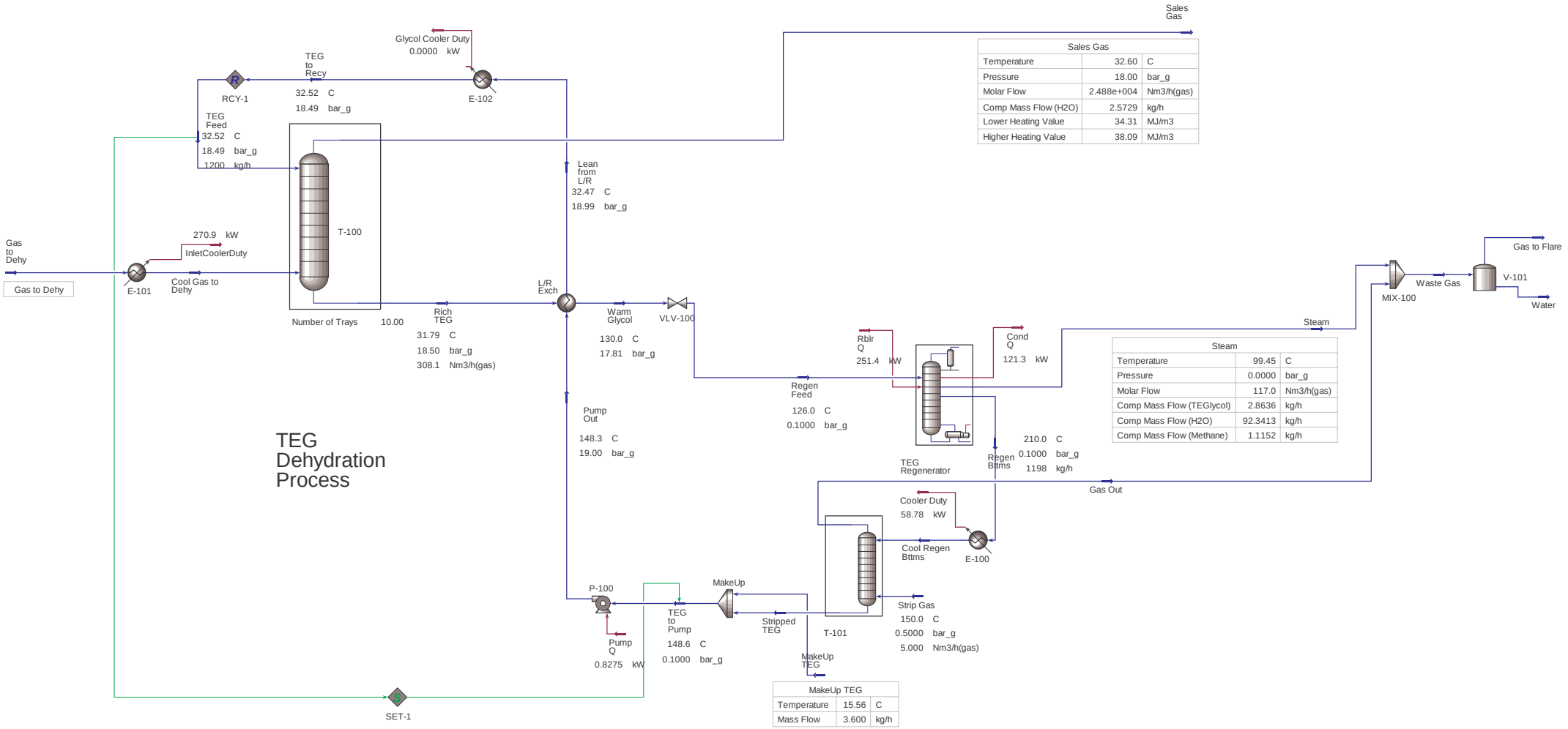

Sales Gas		
Temperature	32.60	C
Pressure	18.00	bar_g
Molar Flow	2.488e+004	Nm3/h(gas)
Comp Mass Flow (H2O)	2.5729	kg/h
Lower Heating Value	34.31	MJ/m3
Higher Heating Value	38.09	MJ/m3

Steam		
Temperature	99.45	C
Pressure	0.0000	bar_g
Molar Flow	117.0	Nm3/h(gas)
Comp Mass Flow (TEGlycol)	2.8636	kg/h
Comp Mass Flow (H2O)	92.3413	kg/h
Comp Mass Flow (Methane)	1.1152	kg/h

MakeUp TEG		
Temperature	15.56	C
Mass Flow	3.600	kg/h

Workbook: Case (Main)

Compositions - Mass Flows

Fluid Pkg: All

Name	MDEA to CONT	Sour Gas	Gas to Contactor	FWKO	Sweet Gas
Comp Mass Flow (Methane) (kg/h)	0.0059 *	17027.9820 *	17027.9820	0.0000	17020.0688
Comp Mass Flow (Ethane) (kg/h)	0.0001 *	378.8121 *	378.8121	0.0000	378.6537
Comp Mass Flow (Propane) (kg/h)	0.0000 *	74.4189 *	74.4189	0.0000	74.3946
Comp Mass Flow (i-Butane) (kg/h)	0.0000 *	19.3419 *	19.3419	0.0000	19.3413
Comp Mass Flow (n-Butane) (kg/h)	0.0000 *	23.2103 *	23.2103	0.0000	23.2096
Comp Mass Flow (i-Pentane) (kg/h)	0.0000 *	8.5749 *	8.5749	0.0000	8.5745
Comp Mass Flow (n-Pentane) (kg/h)	0.0000 *	0.0000 *	0.0000	0.0000	0.0000
Comp Mass Flow (n-Hexane) (kg/h)	0.0000 *	0.0000 *	0.0000	0.0000	0.0000
Comp Mass Flow (n-Heptane) (kg/h)	0.0000 *	0.0000 *	0.0000	0.0000	0.0000
Comp Mass Flow (CO2) (kg/h)	3.7731 *	4398.3472 *	4398.3472	0.0000	1722.0139
Comp Mass Flow (Nitrogen) (kg/h)	0.0000 *	153.1452 *	153.1452	0.0000	153.1078
Comp Mass Flow (H2O) (kg/h)	26660.1768 *	0.0000 *	30.7000	0.0000	110.4546
Comp Mass Flow (MEAmine) (kg/h)	***	***	***	***	***
Comp Mass Flow (DEAmine) (kg/h)	***	***	***	***	***
Comp Mass Flow (MDEAmine) (kg/h)	24949.0115 *	0.0000 *	0.0000	0.0000	0.1523
Comp Mass Flow (H2S) (kg/h)	14.8462 *	509.8157 *	509.8157	0.0000	0.1200

Name	Rich MDEA	MDEA to Flash TK	Flash Vap	Rich to L/R	Regen Feed
Comp Mass Flow (Methane) (kg/h)	7.9191	7.9191	5.7215	2.1975	2.1975
Comp Mass Flow (Ethane) (kg/h)	0.1586	0.1586	0.1165	0.0421	0.0421
Comp Mass Flow (Propane) (kg/h)	0.0243	0.0243	0.0188	0.0055	0.0055
Comp Mass Flow (i-Butane) (kg/h)	0.0006	0.0006	0.0006	0.0000	0.0000
Comp Mass Flow (n-Butane) (kg/h)	0.0007	0.0007	0.0007	0.0000	0.0000
Comp Mass Flow (i-Pentane) (kg/h)	0.0003	0.0003	0.0003	0.0000	0.0000
Comp Mass Flow (n-Pentane) (kg/h)	0.0000	0.0000	0.0000	0.0000	0.0000
Comp Mass Flow (n-Hexane) (kg/h)	0.0000	0.0000	0.0000	0.0000	0.0000
Comp Mass Flow (n-Heptane) (kg/h)	0.0000	0.0000	0.0000	0.0000	0.0000
Comp Mass Flow (CO2) (kg/h)	2680.1064	2680.1064	2.3580	2677.7484	2677.7484
Comp Mass Flow (Nitrogen) (kg/h)	0.0375	0.0375	0.0313	0.0062	0.0062
Comp Mass Flow (H2O) (kg/h)	26580.4222	26580.4222	0.3427	26580.0796	26580.0796
Comp Mass Flow (MEAmine) (kg/h)	***	***	***	***	***
Comp Mass Flow (DEAmine) (kg/h)	***	***	***	***	***
Comp Mass Flow (MDEAmine) (kg/h)	24948.8593	24948.8593	0.0006	24948.8587	24948.8587
Comp Mass Flow (H2S) (kg/h)	524.5419	524.5419	0.1619	524.3800	524.3800

Name	Regen Bttms	Acid Gas	Makeup H2O	MDEA to Cool	MDEA to Pump
Comp Mass Flow (Methane) (kg/h)	0.0000	2.1975	0.0000 *	0.0059	0.0059
Comp Mass Flow (Ethane) (kg/h)	0.0000	0.0421	0.0000 *	0.0001	0.0001
Comp Mass Flow (Propane) (kg/h)	0.0000	0.0055	0.0000 *	0.0000	0.0000
Comp Mass Flow (i-Butane) (kg/h)	0.0000	0.0000	0.0000 *	0.0000	0.0000
Comp Mass Flow (n-Butane) (kg/h)	0.0000	0.0000	0.0000 *	0.0000	0.0000
Comp Mass Flow (i-Pentane) (kg/h)	0.0000	0.0000	0.0000 *	0.0000	0.0000
Comp Mass Flow (n-Pentane) (kg/h)	0.0000	0.0000	0.0000 *	0.0000	0.0000
Comp Mass Flow (n-Hexane) (kg/h)	0.0000	0.0000	0.0000 *	0.0000	0.0000
Comp Mass Flow (n-Heptane) (kg/h)	0.0000	0.0000	0.0000 *	0.0000	0.0000
Comp Mass Flow (CO2) (kg/h)	3.6752	2674.0732	0.0000 *	3.7847	3.7847
Comp Mass Flow (Nitrogen) (kg/h)	0.0000	0.0062	0.0000 *	0.0000	0.0000
Comp Mass Flow (H2O) (kg/h)	26332.6447	247.4349	349.2951 *	26673.8069	26673.8069
Comp Mass Flow (MEAmine) (kg/h)	***	***	***	***	***
Comp Mass Flow (DEAmine) (kg/h)	***	***	***	***	***
Comp Mass Flow (MDEAmine) (kg/h)	24948.8587	0.0000	0.0000 *	24949.0110	24949.0110
Comp Mass Flow (H2S) (kg/h)	14.8696	509.5104	0.0000 *	14.8697	14.8697

Licensed to: MAUNSELL LIMITED
* Specified by user.

Workbook: Case (Main) (continued)

Compositions - Mass Flows (continued)

Fluid Pkg: All

Name	MDEA to Recy	Plant Inlet	Water to Sat	HP Regen Bttms	Cool MDEA to Pump
Comp Mass Flow (Methane) (kg/h)	0.0059	17027.9820	0.0000 *	0.0059	0.0059
Comp Mass Flow (Ethane) (kg/h)	0.0001	378.8121	0.0000 *	0.0001	0.0001
Comp Mass Flow (Propane) (kg/h)	0.0000	74.4189	0.0000 *	0.0000	0.0000
Comp Mass Flow (i-Butane) (kg/h)	0.0000	19.3419	0.0000 *	0.0000	0.0000
Comp Mass Flow (n-Butane) (kg/h)	0.0000	23.2103	0.0000 *	0.0000	0.0000
Comp Mass Flow (i-Pentane) (kg/h)	0.0000	8.5749	0.0000 *	0.0000	0.0000
Comp Mass Flow (n-Pentane) (kg/h)	0.0000	0.0000	0.0000 *	0.0000	0.0000
Comp Mass Flow (n-Hexane) (kg/h)	0.0000	0.0000	0.0000 *	0.0000	0.0000
Comp Mass Flow (n-Heptane) (kg/h)	0.0000	0.0000	0.0000 *	0.0000	0.0000
Comp Mass Flow (CO2) (kg/h)	3.7847	4398.3472	0.0000 *	3.7847	3.7847
Comp Mass Flow (Nitrogen) (kg/h)	0.0000	153.1452	0.0000 *	0.0000	0.0000
Comp Mass Flow (H2O) (kg/h)	26673.8069	30.7000	30.7000 *	26673.8069	26673.8069
Comp Mass Flow (MEAmine) (kg/h)	***	***	***	***	***
Comp Mass Flow (DEAmine) (kg/h)	***	***	***	***	***
Comp Mass Flow (MDEAmine) (kg/h)	24949.0110	0.0000	0.0000 *	24949.0110	24949.0110
Comp Mass Flow (H2S) (kg/h)	14.8697	509.8157	0.0000 *	14.8697	14.8697

Name	HP Makeup Water	Condensate Out	Regen Mix	LP Condensate Out	Cond Vapour
Comp Mass Flow (Methane) (kg/h)	0.0000	0.1098	0.0059	0.1098	0.1039
Comp Mass Flow (Ethane) (kg/h)	0.0000	0.0024	0.0001	0.0024	0.0022
Comp Mass Flow (Propane) (kg/h)	0.0000	0.0004	0.0000	0.0004	0.0004
Comp Mass Flow (i-Butane) (kg/h)	0.0000	0.0000	0.0000	0.0000	0.0000
Comp Mass Flow (n-Butane) (kg/h)	0.0000	0.0000	0.0000	0.0000	0.0000
Comp Mass Flow (i-Pentane) (kg/h)	0.0000	0.0000	0.0000	0.0000	0.0000
Comp Mass Flow (n-Pentane) (kg/h)	0.0000	0.0000	0.0000	0.0000	0.0000
Comp Mass Flow (n-Hexane) (kg/h)	0.0000	0.0000	0.0000	0.0000	0.0000
Comp Mass Flow (n-Heptane) (kg/h)	0.0000	0.0000	0.0000	0.0000	0.0000
Comp Mass Flow (CO2) (kg/h)	0.0000	0.2092	3.7847	0.2092	0.0997
Comp Mass Flow (Nitrogen) (kg/h)	0.0000	0.0005	0.0000	0.0005	0.0005
Comp Mass Flow (H2O) (kg/h)	349.2951	341.1750	26673.8069	341.1750	0.0128
Comp Mass Flow (MEAmine) (kg/h)	***	***	***	***	***
Comp Mass Flow (DEAmine) (kg/h)	***	***	***	***	***
Comp Mass Flow (MDEAmine) (kg/h)	0.0000	0.1523	24949.0110	0.1523	0.0000
Comp Mass Flow (H2S) (kg/h)	0.0000	0.0000	14.8697	0.0000	0.0000

Name	Cond Liquids	Gas to Dehy	Gas to Flare		
Comp Mass Flow (Methane) (kg/h)	0.0059	17019.9590	8.0230		
Comp Mass Flow (Ethane) (kg/h)	0.0001	378.6513	0.1608		
Comp Mass Flow (Propane) (kg/h)	0.0000	74.3943	0.0247		
Comp Mass Flow (i-Butane) (kg/h)	0.0000	19.3413	0.0006		
Comp Mass Flow (n-Butane) (kg/h)	0.0000	23.2096	0.0007		
Comp Mass Flow (i-Pentane) (kg/h)	0.0000	8.5745	0.0004		
Comp Mass Flow (n-Pentane) (kg/h)	0.0000	0.0000	0.0000		
Comp Mass Flow (n-Hexane) (kg/h)	0.0000	0.0000	0.0000		
Comp Mass Flow (n-Heptane) (kg/h)	0.0000	0.0000	0.0000		
Comp Mass Flow (CO2) (kg/h)	0.1096	1721.8047	2676.5309		
Comp Mass Flow (Nitrogen) (kg/h)	0.0000	153.1073	0.0380		
Comp Mass Flow (H2O) (kg/h)	341.1622	118.5747	247.7903		
Comp Mass Flow (MEAmine) (kg/h)	***	***	***		
Comp Mass Flow (DEAmine) (kg/h)	***	***	***		
Comp Mass Flow (MDEAmine) (kg/h)	0.1523	0.0000	0.0006		
Comp Mass Flow (H2S) (kg/h)	0.0000	0.1200	509.6723		

Licensed to: MAUNSELL LIMITED
* Specified by user.

Workbook: Case (Main) (continued)

Compositions - Mole Fraction

Fluid Pkg: All

Name	MDEA to CONT	Sour Gas	Gas to Contactor	FWKO	Sweet Gas
Comp Mole Frac (Methane)	0.0000 *	0.8868 *	0.8855	0.0013	0.9415
Comp Mole Frac (Ethane)	0.0000 *	0.0105 *	0.0105	0.0000	0.0112
Comp Mole Frac (Propane)	0.0000 *	0.0014 *	0.0014	0.0000	0.0015
Comp Mole Frac (i-Butane)	0.0000 *	0.0003 *	0.0003	0.0000	0.0003
Comp Mole Frac (n-Butane)	0.0000 *	0.0003 *	0.0003	0.0000	0.0004
Comp Mole Frac (i-Pentane)	0.0000 *	0.0001 *	0.0001	0.0000	0.0001
Comp Mole Frac (n-Pentane)	0.0000 *	0.0000 *	0.0000	0.0000	0.0000
Comp Mole Frac (n-Hexane)	0.0000 *	0.0000 *	0.0000	0.0000	0.0000
Comp Mole Frac (n-Heptane)	0.0000 *	0.0000 *	0.0000	0.0000	0.0000
Comp Mole Frac (CO2)	0.0001 *	0.0835 *	0.0834	0.0023	0.0347
Comp Mole Frac (Nitrogen)	0.0000 *	0.0046 *	0.0046	0.0000	0.0049
Comp Mole Frac (H2O)	0.8758 *	0.0000 *	0.0014	0.9953	0.0054
Comp Mole Frac (MEAmine)	***	***	***	***	***
Comp Mole Frac (DEAmine)	***	***	***	***	***
Comp Mole Frac (MDEAmine)	0.1239 *	0.0000 *	0.0000	0.0000	0.0000
Comp Mole Frac (H2S)	0.0003 *	0.0125 *	0.0125	0.0011	0.0000

Name	Rich MDEA	MDEA to Flash TK	Flash Vap	Rich to L/R	Regen Feed
Comp Mole Frac (Methane)	0.0003	0.0003	0.8116	0.0001	0.0001
Comp Mole Frac (Ethane)	0.0000	0.0000	0.0088	0.0000	0.0000
Comp Mole Frac (Propane)	0.0000	0.0000	0.0010	0.0000	0.0000
Comp Mole Frac (i-Butane)	0.0000	0.0000	0.0000	0.0000	0.0000
Comp Mole Frac (n-Butane)	0.0000	0.0000	0.0000	0.0000	0.0000
Comp Mole Frac (i-Pentane)	0.0000	0.0000	0.0000	0.0000	0.0000
Comp Mole Frac (n-Pentane)	0.0000	0.0000	0.0000	0.0000	0.0000
Comp Mole Frac (n-Hexane)	0.0000	0.0000	0.0000	0.0000	0.0000
Comp Mole Frac (n-Heptane)	0.0000	0.0000	0.0000	0.0000	0.0000
Comp Mole Frac (CO2)	0.0346	0.0346	0.1219	0.0345	0.0345
Comp Mole Frac (Nitrogen)	0.0000	0.0000	0.0025	0.0000	0.0000
Comp Mole Frac (H2O)	0.8376	0.8376	0.0433	0.8378	0.8378
Comp Mole Frac (MEAmine)	***	***	***	***	***
Comp Mole Frac (DEAmine)	***	***	***	***	***
Comp Mole Frac (MDEAmine)	0.1189	0.1189	0.0000	0.1189	0.1189
Comp Mole Frac (H2S)	0.0087	0.0087	0.0108	0.0087	0.0087

Name	Regen Bttms	Acid Gas	Makeup H2O	MDEA to Cool	MDEA to Pump
Comp Mole Frac (Methane)	0.0000	0.0015	0.0000 *	0.0000	0.0000
Comp Mole Frac (Ethane)	0.0000	0.0000	0.0000 *	0.0000	0.0000
Comp Mole Frac (Propane)	0.0000	0.0000	0.0000 *	0.0000	0.0000
Comp Mole Frac (i-Butane)	0.0000	0.0000	0.0000 *	0.0000	0.0000
Comp Mole Frac (n-Butane)	0.0000	0.0000	0.0000 *	0.0000	0.0000
Comp Mole Frac (i-Pentane)	0.0000	0.0000	0.0000 *	0.0000	0.0000
Comp Mole Frac (n-Pentane)	0.0000	0.0000	0.0000 *	0.0000	0.0000
Comp Mole Frac (n-Hexane)	0.0000	0.0000	0.0000 *	0.0000	0.0000
Comp Mole Frac (n-Heptane)	0.0000	0.0000	0.0000 *	0.0000	0.0000
Comp Mole Frac (CO2)	0.0000	0.6782	0.0000 *	0.0001	0.0001
Comp Mole Frac (Nitrogen)	0.0000	0.0000	0.0000 *	0.0000	0.0000
Comp Mole Frac (H2O)	0.8744	0.1533	1.0000 *	0.8758	0.8758
Comp Mole Frac (MEAmine)	***	***	***	***	***
Comp Mole Frac (DEAmine)	***	***	***	***	***
Comp Mole Frac (MDEAmine)	0.1253	0.0000	0.0000 *	0.1239	0.1239
Comp Mole Frac (H2S)	0.0003	0.1669	0.0000 *	0.0003	0.0003

Licensed to: MAUNSELL LIMITED
* Specified by user.

Workbook: Case (Main) (continued)

Compositions - Mole Fraction (continued)

Fluid Pkg: All

Name	MDEA to Recy	Plant Inlet	Water to Sat	HP Regen Bttms	Cool MDEA to Pump
Comp Mole Frac (Methane)	0.0000	0.8855	0.0000 *	0.0000	0.0000
Comp Mole Frac (Ethane)	0.0000	0.0105	0.0000 *	0.0000	0.0000
Comp Mole Frac (Propane)	0.0000	0.0014	0.0000 *	0.0000	0.0000
Comp Mole Frac (i-Butane)	0.0000	0.0003	0.0000 *	0.0000	0.0000
Comp Mole Frac (n-Butane)	0.0000	0.0003	0.0000 *	0.0000	0.0000
Comp Mole Frac (i-Pentane)	0.0000	0.0001	0.0000 *	0.0000	0.0000
Comp Mole Frac (n-Pentane)	0.0000	0.0000	0.0000 *	0.0000	0.0000
Comp Mole Frac (n-Hexane)	0.0000	0.0000	0.0000 *	0.0000	0.0000
Comp Mole Frac (n-Heptane)	0.0000	0.0000	0.0000 *	0.0000	0.0000
Comp Mole Frac (CO2)	0.0001	0.0834	0.0000 *	0.0001	0.0001
Comp Mole Frac (Nitrogen)	0.0000	0.0046	0.0000 *	0.0000	0.0000
Comp Mole Frac (H2O)	0.8758	0.0014	1.0000 *	0.8758	0.8758
Comp Mole Frac (MEAmine)	***	***	***	***	***
Comp Mole Frac (DEAmine)	***	***	***	***	***
Comp Mole Frac (MDEAmine)	0.1239	0.0000	0.0000 *	0.1239	0.1239
Comp Mole Frac (H2S)	0.0003	0.0125	0.0000 *	0.0003	0.0003

Name	HP Makeup Water	Condensate Out	Regen Mix	LP Condensate Out	Cond Vapour
Comp Mole Frac (Methane)	0.0000	0.0004	0.0000	0.0004	0.6782
Comp Mole Frac (Ethane)	0.0000	0.0000	0.0000	0.0000	0.0078
Comp Mole Frac (Propane)	0.0000	0.0000	0.0000	0.0000	0.0008
Comp Mole Frac (i-Butane)	0.0000	0.0000	0.0000	0.0000	0.0000
Comp Mole Frac (n-Butane)	0.0000	0.0000	0.0000	0.0000	0.0000
Comp Mole Frac (i-Pentane)	0.0000	0.0000	0.0000	0.0000	0.0000
Comp Mole Frac (n-Pentane)	0.0000	0.0000	0.0000	0.0000	0.0000
Comp Mole Frac (n-Hexane)	0.0000	0.0000	0.0000	0.0000	0.0000
Comp Mole Frac (n-Heptane)	0.0000	0.0000	0.0000	0.0000	0.0000
Comp Mole Frac (CO2)	0.0000	0.0003	0.0001	0.0003	0.2371
Comp Mole Frac (Nitrogen)	0.0000	0.0000	0.0000	0.0000	0.0018
Comp Mole Frac (H2O)	1.0000	0.9993	0.8758	0.9993	0.0742
Comp Mole Frac (MEAmine)	***	***	***	***	***
Comp Mole Frac (DEAmine)	***	***	***	***	***
Comp Mole Frac (MDEAmine)	0.0000	0.0001	0.1239	0.0001	0.0000
Comp Mole Frac (H2S)	0.0000	0.0000	0.0003	0.0000	0.0000

Name	Cond Liquids	Gas to Dehy	Gas to Flare		
Comp Mole Frac (Methane)	0.0000	0.9412	0.0056		
Comp Mole Frac (Ethane)	0.0000	0.0112	0.0001		
Comp Mole Frac (Propane)	0.0000	0.0015	0.0000		
Comp Mole Frac (i-Butane)	0.0000	0.0003	0.0000		
Comp Mole Frac (n-Butane)	0.0000	0.0004	0.0000		
Comp Mole Frac (i-Pentane)	0.0000	0.0001	0.0000		
Comp Mole Frac (n-Pentane)	0.0000	0.0000	0.0000		
Comp Mole Frac (n-Hexane)	0.0000	0.0000	0.0000		
Comp Mole Frac (n-Heptane)	0.0000	0.0000	0.0000		
Comp Mole Frac (CO2)	0.0001	0.0347	0.6755		
Comp Mole Frac (Nitrogen)	0.0000	0.0048	0.0000		
Comp Mole Frac (H2O)	0.9998	0.0058	0.1528		
Comp Mole Frac (MEAmine)	***	***	***		
Comp Mole Frac (DEAmine)	***	***	***		
Comp Mole Frac (MDEAmine)	0.0001	0.0000	0.0000		
Comp Mole Frac (H2S)	0.0000	0.0000	0.1661		

Energy Streams

Fluid Pkg: All

Name	RBLR Q	COND Q	Pump Q	LP Pump Duty	Optional Cooler Duty
Heat Flow (kW)	1.100e+004	8343	35.69	2.957	0.0000 *

Name	Cond Pump Duty
Heat Flow (kW)	0.2403

Licensed to: MAUNSELL LIMITED

* Specified by user.

Workbook: Case (Main) (continued)

Streams

Fluid Pkg: All

Name	MDEA to CONT	Sour Gas	Gas to Contactor	FWKO	Sweet Gas
Vapour Fraction	0.0000	1.0000	1.0000	0.0000	1.0000
Temperature (C)	48.00 *	48.00 *	46.44	46.44	48.54
Pressure (bar_g)	19.65 *	20.00 *	20.00	20.00	19.00
Molar Flow (Nm3/h(gas))	3.787e+004	2.683e+004 *	2.687e+004	0.0000	2.526e+004
Mass Flow (kg/h)	5.163e+004	2.259e+004	2.262e+004	0.0000	1.951e+004
Std Ideal Liq Vol Flow (m3/h)	50.73 *	64.34	64.37	0.0000	60.54
Heat Flow (kW)	-8971	4437	4422	0.0000	4243
Molar Enthalpy (kJ/kgmole)	-1.911e+004	1.335e+004	1.328e+004	-3.228e+004	1.355e+004
Higher Heating Value (MJ/m3)	32.78	34.73	34.69	2.061	36.57

Name	Rich MDEA	MDEA to Flash TK	Flash Vap	Rich to L/R	Regen Feed
Vapour Fraction	0.0000	0.0002	1.0000	0.0000	0.0001
Temperature (C)	69.28	69.26	69.26	69.26	90.00 *
Pressure (bar_g)	20.00	5.192 *	5.192	5.192	4.503
Molar Flow (Nm3/h(gas))	3.948e+004	3.948e+004	9.850	3.948e+004	3.948e+004
Mass Flow (kg/h)	5.474e+004	5.474e+004	8.753	5.473e+004	5.473e+004
Std Ideal Liq Vol Flow (m3/h)	54.56	54.56	2.292e-002	54.54	54.54
Heat Flow (kW)	-8791	-8791	1.697	-8792	-7693
Molar Enthalpy (kJ/kgmole)	-1.796e+004	-1.796e+004	1.391e+004	-1.797e+004	-1.572e+004
Higher Heating Value (MJ/m3)	31.53	31.53	31.73	31.53	31.53

Name	Regen Bttms	Acid Gas	Makeup H2O	MDEA to Cool	MDEA to Pump
Vapour Fraction	0.0000	1.0000	0.0000	0.0000	0.0000
Temperature (C)	115.3	60.05	21.11 *	94.62	47.28
Pressure (bar_g)	0.5000	0.3000	0.4691 *	1.311	0.9658
Molar Flow (Nm3/h(gas))	3.747e+004	2008	434.6	3.789e+004	3.789e+004
Mass Flow (kg/h)	5.130e+004	3433	349.3	5.164e+004	5.164e+004
Std Ideal Liq Vol Flow (m3/h)	50.40	4.142	0.3500 *	50.74	50.74
Heat Flow (kW)	-5306	269.9	-185.2	-6573	-9013
Molar Enthalpy (kJ/kgmole)	-1.143e+004	1.084e+004	-3.439e+004	-1.400e+004	-1.919e+004
Higher Heating Value (MJ/m3)	33.12	4.363	1.989	32.77	32.77

Name	MDEA to Recy	Plant Inlet	Water to Sat	HP Regen Bttms	Cool MDEA to Pump
Vapour Fraction	0.0000	1.0000	0.0000	0.0000	0.0000
Temperature (C)	48.00 *	46.44	48.00 *	114.9	47.28
Pressure (bar_g)	19.65	20.00	20.00 *	2.000 *	0.4658
Molar Flow (Nm3/h(gas))	3.789e+004	2.687e+004	38.20	3.789e+004	3.789e+004
Mass Flow (kg/h)	5.164e+004	2.262e+004	30.70 *	5.164e+004	5.164e+004
Std Ideal Liq Vol Flow (m3/h)	50.74	64.37	3.076e-002	50.74	50.74
Heat Flow (kW)	-8977	4422	-15.32	-5473	-9013
Molar Enthalpy (kJ/kgmole)	-1.912e+004	1.328e+004	-3.237e+004	-1.166e+004	-1.919e+004
Higher Heating Value (MJ/m3)	32.77	34.69	1.989	32.77	32.77

Name	HP Makeup Water	Condensate Out	Regen Mix	LP Condensate Out	Cond Vapour
Vapour Fraction	0.0000	0.0000	0.0000	0.0005	1.0000
Temperature (C)	21.71	48.12	114.8	48.10	48.10
Pressure (bar_g)	19.00 *	20.00	0.5000	0.5000 *	0.5000
Molar Flow (Nm3/h(gas))	434.6	424.8	3.789e+004	424.8	0.2141
Mass Flow (kg/h)	349.3	341.6	5.164e+004	341.6	0.2194
Std Ideal Liq Vol Flow (m3/h)	0.3500	0.3426	50.74	0.3426	4.883e-004
Heat Flow (kW)	-185.0	-170.2	-5476	-170.2	3.349e-002
Molar Enthalpy (kJ/kgmole)	-3.435e+004	-3.233e+004	-1.166e+004	-3.233e+004	1.262e+004
Higher Heating Value (MJ/m3)	1.989	2.019	32.77	2.019	26.42

Licensed to: MAUNSELL LIMITED
* Specified by user.

Workbook: Case (Main) (continued)

Streams (continued)

Fluid Pkg: All

Name	Cond Liquids	Gas to Dehy	Gas to Flare	RBLR Q	COND Q
Vapour Fraction	0.0000	0.9999	1.0000	---	---
Temperature (C)	48.10	47.32	60.05	---	---
Pressure (bar_g)	0.5000	19.00	0.3000	---	---
Molar Flow (Nm3/h(gas))	424.6	2.527e+004	2018	---	---
Mass Flow (kg/h)	341.4	1.952e+004	3442	---	---
Std Ideal Liq Vol Flow (m3/h)	0.3422	60.54	4.165	---	---
Heat Flow (kW)	-170.2	4228	271.6	1.100e+004	8343
Molar Enthalpy (kJ/kgmole)	-3.235e+004	1.350e+004	1.086e+004	---	---
Higher Heating Value (MJ/m3)	2.006	36.55	4.500	---	---

Name	Pump Q	LP Pump Duty	Optional Cooler Duty	Cond Pump Duty	
Vapour Fraction	---	---	---	---	
Temperature (C)	---	---	---	---	
Pressure (bar_g)	---	---	---	---	
Molar Flow (Nm3/h(gas))	---	---	---	---	
Mass Flow (kg/h)	---	---	---	---	
Std Ideal Liq Vol Flow (m3/h)	---	---	---	---	
Heat Flow (kW)	35.69	2.957	0.0000 *	0.2403	
Molar Enthalpy (kJ/kgmole)	---	---	---	---	
Higher Heating Value (MJ/m3)	---	---	---	---	

Licensed to: MAUNSELL LIMITED
* Specified by user.

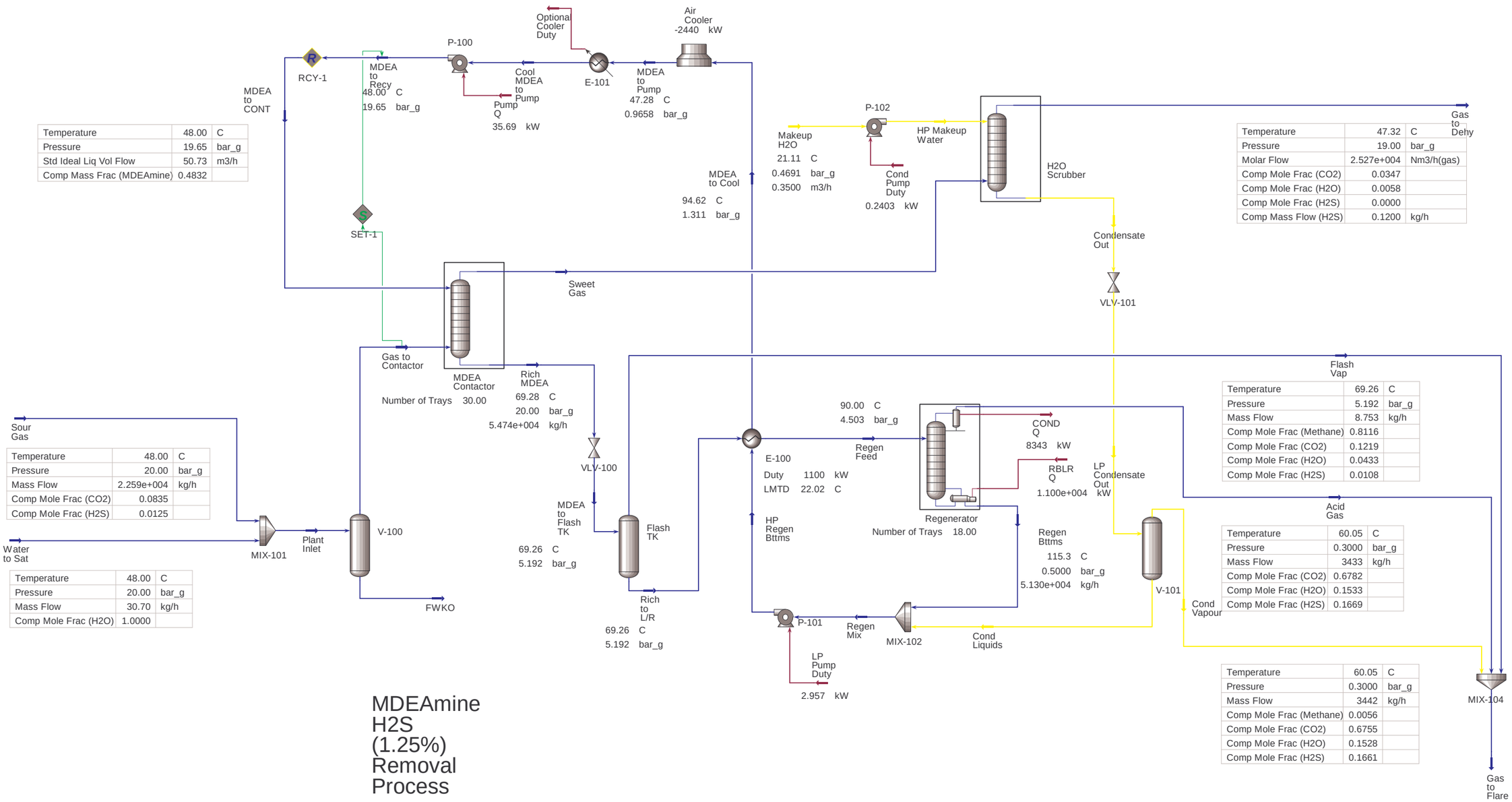

Temperature	48.00	C
Pressure	19.65	bar_g
Std Ideal Liq Vol Flow	50.73	m3/h
Comp Mass Frac (MDEAmine)	0.4832	

Temperature	48.00	C
Pressure	20.00	bar_g
Mass Flow	2.259e+004	kg/h
Comp Mole Frac (CO2)	0.0835	
Comp Mole Frac (H2S)	0.0125	

Temperature	48.00	C
Pressure	20.00	bar_g
Mass Flow	30.70	kg/h
Comp Mole Frac (H2O)	1.0000	

Temperature	47.32	C
Pressure	19.00	bar_g
Molar Flow	2.527e+004	Nm3/h(gas)
Comp Mole Frac (CO2)	0.0347	
Comp Mole Frac (H2O)	0.0058	
Comp Mole Frac (H2S)	0.0000	
Comp Mass Flow (H2S)	0.1200	kg/h

Temperature	69.26	C
Pressure	5.192	bar_g
Mass Flow	8.753	kg/h
Comp Mole Frac (Methane)	0.8116	
Comp Mole Frac (CO2)	0.1219	
Comp Mole Frac (H2O)	0.0433	
Comp Mole Frac (H2S)	0.0108	

Temperature	60.05	C
Pressure	0.3000	bar_g
Mass Flow	3433	kg/h
Comp Mole Frac (CO2)	0.6782	
Comp Mole Frac (H2O)	0.1533	
Comp Mole Frac (H2S)	0.1669	

Temperature	60.05	C
Pressure	0.3000	bar_g
Mass Flow	3442	kg/h
Comp Mole Frac (Methane)	0.0056	
Comp Mole Frac (CO2)	0.6755	
Comp Mole Frac (H2O)	0.1528	
Comp Mole Frac (H2S)	0.1661	

Workbook: Case (Main)

Compositions - Mass Flows

Fluid Pkg: All

Name		MDEA to CONT	Sour Gas	Gas to Contactor	FWKO	Sweet Gas
Comp Mass Flow (Methane)	(kg/h)	0.0050 *	17148.9562 *	17148.9562	0.0000	17141.1463
Comp Mass Flow (Ethane)	(kg/h)	0.0001 *	378.8070 *	378.8070	0.0000	378.6515
Comp Mass Flow (Propane)	(kg/h)	0.0000 *	74.4179 *	74.4179	0.0000	74.3940
Comp Mass Flow (i-Butane)	(kg/h)	0.0000 *	19.3417 *	19.3417	0.0000	19.3411
Comp Mass Flow (n-Butane)	(kg/h)	0.0000 *	23.2100 *	23.2100	0.0000	23.2093
Comp Mass Flow (i-Pentane)	(kg/h)	0.0000 *	8.5748 *	8.5748	0.0000	8.5744
Comp Mass Flow (n-Pentane)	(kg/h)	0.0000 *	0.0000 *	0.0000	0.0000	0.0000
Comp Mass Flow (n-Hexane)	(kg/h)	0.0000 *	0.0000 *	0.0000	0.0000	0.0000
Comp Mass Flow (n-Heptane)	(kg/h)	0.0000 *	0.0000 *	0.0000	0.0000	0.0000
Comp Mass Flow (CO2)	(kg/h)	19.2841 *	4630.1175 *	4630.1175	0.0000	1797.2810
Comp Mass Flow (Nitrogen)	(kg/h)	0.0000 *	153.1431 *	153.1431	0.0000	153.1066
Comp Mass Flow (H2O)	(kg/h)	25899.5629 *	0.0000 *	30.7000	0.0000	111.1936
Comp Mass Flow (MEAmine)	(kg/h)	***	***	***	***	***
Comp Mass Flow (DEAmine)	(kg/h)	***	***	***	***	***
Comp Mass Flow (MDEAmine)	(kg/h)	24926.1527 *	0.0000 *	0.0000	0.0000	0.1578
Comp Mass Flow (H2S)	(kg/h)	12.7803 *	73.4135 *	73.4135	0.0000	0.1155

Name		Rich MDEA	MDEA to Flash TK	Flash Vap	Rich to L/R	Regen Feed
Comp Mass Flow (Methane)	(kg/h)	7.8149	7.8149	5.5677	2.2472	2.2472
Comp Mass Flow (Ethane)	(kg/h)	0.1556	0.1556	0.1127	0.0429	0.0429
Comp Mass Flow (Propane)	(kg/h)	0.0239	0.0239	0.0183	0.0056	0.0056
Comp Mass Flow (i-Butane)	(kg/h)	0.0006	0.0006	0.0005	0.0000	0.0000
Comp Mass Flow (n-Butane)	(kg/h)	0.0007	0.0007	0.0006	0.0000	0.0000
Comp Mass Flow (i-Pentane)	(kg/h)	0.0003	0.0003	0.0003	0.0000	0.0000
Comp Mass Flow (n-Pentane)	(kg/h)	0.0000	0.0000	0.0000	0.0000	0.0000
Comp Mass Flow (n-Hexane)	(kg/h)	0.0000	0.0000	0.0000	0.0000	0.0000
Comp Mass Flow (n-Heptane)	(kg/h)	0.0000	0.0000	0.0000	0.0000	0.0000
Comp Mass Flow (CO2)	(kg/h)	2852.1207	2852.1207	1.8222	2850.2984	2850.2984
Comp Mass Flow (Nitrogen)	(kg/h)	0.0366	0.0366	0.0303	0.0063	0.0063
Comp Mass Flow (H2O)	(kg/h)	25819.0693	25819.0693	0.2996	25818.7697	25818.7697
Comp Mass Flow (MEAmine)	(kg/h)	***	***	***	***	***
Comp Mass Flow (DEAmine)	(kg/h)	***	***	***	***	***
Comp Mass Flow (MDEAmine)	(kg/h)	24925.9949	24925.9949	0.0005	24925.9944	24925.9944
Comp Mass Flow (H2S)	(kg/h)	86.0783	86.0783	0.0186	86.0598	86.0598

Name		Regen Bttms	Acid Gas	Makeup H2O	MDEA to Cool	MDEA to Pump
Comp Mass Flow (Methane)	(kg/h)	0.0000	2.2472	0.0000 *	0.0050	0.0050
Comp Mass Flow (Ethane)	(kg/h)	0.0000	0.0429	0.0000 *	0.0001	0.0001
Comp Mass Flow (Propane)	(kg/h)	0.0000	0.0056	0.0000 *	0.0000	0.0000
Comp Mass Flow (i-Butane)	(kg/h)	0.0000	0.0000	0.0000 *	0.0000	0.0000
Comp Mass Flow (n-Butane)	(kg/h)	0.0000	0.0000	0.0000 *	0.0000	0.0000
Comp Mass Flow (i-Pentane)	(kg/h)	0.0000	0.0000	0.0000 *	0.0000	0.0000
Comp Mass Flow (n-Pentane)	(kg/h)	0.0000	0.0000	0.0000 *	0.0000	0.0000
Comp Mass Flow (n-Hexane)	(kg/h)	0.0000	0.0000	0.0000 *	0.0000	0.0000
Comp Mass Flow (n-Heptane)	(kg/h)	0.0000	0.0000	0.0000 *	0.0000	0.0000
Comp Mass Flow (CO2)	(kg/h)	19.1797	2831.1187	0.0000 *	19.2757	19.2757
Comp Mass Flow (Nitrogen)	(kg/h)	0.0000	0.0063	0.0000 *	0.0000	0.0000
Comp Mass Flow (H2O)	(kg/h)	25601.5722	217.1975	299.3958 *	25891.8984	25891.8984
Comp Mass Flow (MEAmine)	(kg/h)	***	***	***	***	***
Comp Mass Flow (DEAmine)	(kg/h)	***	***	***	***	***
Comp Mass Flow (MDEAmine)	(kg/h)	24925.9944	0.0000	0.0000 *	24926.1522	24926.1522
Comp Mass Flow (H2S)	(kg/h)	12.7922	73.2676	0.0000 *	12.7922	12.7922

Licensed to: MAUNSELL LIMITED
* Specified by user.

Workbook: Case (Main) (continued)

Compositions - Mass Flows (continued)

Fluid Pkg: All

Name	MDEA to Recy	Plant Inlet	Water to Sat	HP Regen Bttms	Cool MDEA to Pump
Comp Mass Flow (Methane) (kg/h)	0.0050	17148.9562	0.0000 *	0.0050	0.0050
Comp Mass Flow (Ethane) (kg/h)	0.0001	378.8070	0.0000 *	0.0001	0.0001
Comp Mass Flow (Propane) (kg/h)	0.0000	74.4179	0.0000 *	0.0000	0.0000
Comp Mass Flow (i-Butane) (kg/h)	0.0000	19.3417	0.0000 *	0.0000	0.0000
Comp Mass Flow (n-Butane) (kg/h)	0.0000	23.2100	0.0000 *	0.0000	0.0000
Comp Mass Flow (i-Pentane) (kg/h)	0.0000	8.5748	0.0000 *	0.0000	0.0000
Comp Mass Flow (n-Pentane) (kg/h)	0.0000	0.0000	0.0000 *	0.0000	0.0000
Comp Mass Flow (n-Hexane) (kg/h)	0.0000	0.0000	0.0000 *	0.0000	0.0000
Comp Mass Flow (n-Heptane) (kg/h)	0.0000	0.0000	0.0000 *	0.0000	0.0000
Comp Mass Flow (CO2) (kg/h)	19.2757	4630.1175	0.0000 *	19.2757	19.2757
Comp Mass Flow (Nitrogen) (kg/h)	0.0000	153.1431	0.0000 *	0.0000	0.0000
Comp Mass Flow (H2O) (kg/h)	25891.8984	30.7000	30.7000 *	25891.8984	25891.8984
Comp Mass Flow (MEAmine) (kg/h)	***	***	***	***	***
Comp Mass Flow (DEAmine) (kg/h)	***	***	***	***	***
Comp Mass Flow (MDEAmine) (kg/h)	24926.1522	0.0000	0.0000 *	24926.1522	24926.1522
Comp Mass Flow (H2S) (kg/h)	12.7922	73.4135	0.0000 *	12.7922	12.7922

Name	HP Makeup Water	Condensate Out	Regen Mix	LP Condensate Out	Cond Vapour
Comp Mass Flow (Methane) (kg/h)	0.0000	0.0933	0.0050	0.0933	0.0884
Comp Mass Flow (Ethane) (kg/h)	0.0000	0.0020	0.0001	0.0020	0.0019
Comp Mass Flow (Propane) (kg/h)	0.0000	0.0003	0.0000	0.0003	0.0003
Comp Mass Flow (i-Butane) (kg/h)	0.0000	0.0000	0.0000	0.0000	0.0000
Comp Mass Flow (n-Butane) (kg/h)	0.0000	0.0000	0.0000	0.0000	0.0000
Comp Mass Flow (i-Pentane) (kg/h)	0.0000	0.0000	0.0000	0.0000	0.0000
Comp Mass Flow (n-Pentane) (kg/h)	0.0000	0.0000	0.0000	0.0000	0.0000
Comp Mass Flow (n-Hexane) (kg/h)	0.0000	0.0000	0.0000	0.0000	0.0000
Comp Mass Flow (n-Heptane) (kg/h)	0.0000	0.0000	0.0000	0.0000	0.0000
Comp Mass Flow (CO2) (kg/h)	0.0000	0.1842	19.2757	0.1842	0.0882
Comp Mass Flow (Nitrogen) (kg/h)	0.0000	0.0004	0.0000	0.0004	0.0004
Comp Mass Flow (H2O) (kg/h)	299.3958	290.3372	25891.8984	290.3372	0.0110
Comp Mass Flow (MEAmine) (kg/h)	***	***	***	***	***
Comp Mass Flow (DEAmine) (kg/h)	***	***	***	***	***
Comp Mass Flow (MDEAmine) (kg/h)	0.0000	0.1578	24926.1522	0.1578	0.0000
Comp Mass Flow (H2S) (kg/h)	0.0000	0.0000	12.7922	0.0000	0.0000

Name	Cond Liquids	Gas to Dehy	Gas to Flare		
Comp Mass Flow (Methane) (kg/h)	0.0050	17141.0530	7.9032		
Comp Mass Flow (Ethane) (kg/h)	0.0001	378.6495	0.1575		
Comp Mass Flow (Propane) (kg/h)	0.0000	74.3937	0.0242		
Comp Mass Flow (i-Butane) (kg/h)	0.0000	19.3411	0.0006		
Comp Mass Flow (n-Butane) (kg/h)	0.0000	23.2093	0.0007		
Comp Mass Flow (i-Pentane) (kg/h)	0.0000	8.5744	0.0003		
Comp Mass Flow (n-Pentane) (kg/h)	0.0000	0.0000	0.0000		
Comp Mass Flow (n-Hexane) (kg/h)	0.0000	0.0000	0.0000		
Comp Mass Flow (n-Heptane) (kg/h)	0.0000	0.0000	0.0000		
Comp Mass Flow (CO2) (kg/h)	0.0960	1797.0968	2833.0292		
Comp Mass Flow (Nitrogen) (kg/h)	0.0000	153.1062	0.0370		
Comp Mass Flow (H2O) (kg/h)	290.3262	120.2522	217.5081		
Comp Mass Flow (MEAmine) (kg/h)	***	***	***		
Comp Mass Flow (DEAmine) (kg/h)	***	***	***		
Comp Mass Flow (MDEAmine) (kg/h)	0.1578	0.0000	0.0005		
Comp Mass Flow (H2S) (kg/h)	0.0000	0.1155	73.2861		

Licensed to: MAUNSELL LIMITED
* Specified by user.

Workbook: Case (Main) (continued)

Compositions - Mole Fraction

Fluid Pkg: All

Name	MDEA to CONT	Sour Gas	Gas to Contactor	FWKO	Sweet Gas
Comp Mole Frac (Methane)	0.0000 *	0.8931 *	0.8918	0.0013	0.9405
Comp Mole Frac (Ethane)	0.0000 *	0.0105 *	0.0105	0.0000	0.0111
Comp Mole Frac (Propane)	0.0000 *	0.0014 *	0.0014	0.0000	0.0015
Comp Mole Frac (i-Butane)	0.0000 *	0.0003 *	0.0003	0.0000	0.0003
Comp Mole Frac (n-Butane)	0.0000 *	0.0003 *	0.0003	0.0000	0.0004
Comp Mole Frac (i-Pentane)	0.0000 *	0.0001 *	0.0001	0.0000	0.0001
Comp Mole Frac (n-Pentane)	0.0000 *	0.0000 *	0.0000	0.0000	0.0000
Comp Mole Frac (n-Hexane)	0.0000 *	0.0000 *	0.0000	0.0000	0.0000
Comp Mole Frac (n-Heptane)	0.0000 *	0.0000 *	0.0000	0.0000	0.0000
Comp Mole Frac (CO2)	0.0003 *	0.0879 *	0.0878	0.0024	0.0359
Comp Mole Frac (Nitrogen)	0.0000 *	0.0046 *	0.0046	0.0000	0.0048
Comp Mole Frac (H2O)	0.8725 *	0.0000 *	0.0014	0.9961	0.0054
Comp Mole Frac (MEAmine)	***	***	***	***	***
Comp Mole Frac (DEAmine)	***	***	***	***	***
Comp Mole Frac (MDEAmine)	0.1270 *	0.0000 *	0.0000	0.0000	0.0000
Comp Mole Frac (H2S)	0.0002 *	0.0018 *	0.0018	0.0002	0.0000

Name	Rich MDEA	MDEA to Flash TK	Flash Vap	Rich to L/R	Regen Feed
Comp Mole Frac (Methane)	0.0003	0.0003	0.8446	0.0001	0.0001
Comp Mole Frac (Ethane)	0.0000	0.0000	0.0091	0.0000	0.0000
Comp Mole Frac (Propane)	0.0000	0.0000	0.0010	0.0000	0.0000
Comp Mole Frac (i-Butane)	0.0000	0.0000	0.0000	0.0000	0.0000
Comp Mole Frac (n-Butane)	0.0000	0.0000	0.0000	0.0000	0.0000
Comp Mole Frac (i-Pentane)	0.0000	0.0000	0.0000	0.0000	0.0000
Comp Mole Frac (n-Pentane)	0.0000	0.0000	0.0000	0.0000	0.0000
Comp Mole Frac (n-Hexane)	0.0000	0.0000	0.0000	0.0000	0.0000
Comp Mole Frac (n-Heptane)	0.0000	0.0000	0.0000	0.0000	0.0000
Comp Mole Frac (CO2)	0.0379	0.0379	0.1008	0.0379	0.0379
Comp Mole Frac (Nitrogen)	0.0000	0.0000	0.0026	0.0000	0.0000
Comp Mole Frac (H2O)	0.8380	0.8380	0.0405	0.8382	0.8382
Comp Mole Frac (MEAmine)	***	***	***	***	***
Comp Mole Frac (DEAmine)	***	***	***	***	***
Comp Mole Frac (MDEAmine)	0.1223	0.1223	0.0000	0.1223	0.1223
Comp Mole Frac (H2S)	0.0015	0.0015	0.0013	0.0015	0.0015

Name	Regen Bttms	Acid Gas	Makeup H2O	MDEA to Cool	MDEA to Pump
Comp Mole Frac (Methane)	0.0000	0.0018	0.0000 *	0.0000	0.0000
Comp Mole Frac (Ethane)	0.0000	0.0000	0.0000 *	0.0000	0.0000
Comp Mole Frac (Propane)	0.0000	0.0000	0.0000 *	0.0000	0.0000
Comp Mole Frac (i-Butane)	0.0000	0.0000	0.0000 *	0.0000	0.0000
Comp Mole Frac (n-Butane)	0.0000	0.0000	0.0000 *	0.0000	0.0000
Comp Mole Frac (i-Pentane)	0.0000	0.0000	0.0000 *	0.0000	0.0000
Comp Mole Frac (n-Pentane)	0.0000	0.0000	0.0000 *	0.0000	0.0000
Comp Mole Frac (n-Hexane)	0.0000	0.0000	0.0000 *	0.0000	0.0000
Comp Mole Frac (n-Heptane)	0.0000	0.0000	0.0000 *	0.0000	0.0000
Comp Mole Frac (CO2)	0.0003	0.8176	0.0000 *	0.0003	0.0003
Comp Mole Frac (Nitrogen)	0.0000	0.0000	0.0000 *	0.0000	0.0000
Comp Mole Frac (H2O)	0.8713	0.1532	1.0000 *	0.8725	0.8725
Comp Mole Frac (MEAmine)	***	***	***	***	***
Comp Mole Frac (DEAmine)	***	***	***	***	***
Comp Mole Frac (MDEAmine)	0.1282	0.0000	0.0000 *	0.1270	0.1270
Comp Mole Frac (H2S)	0.0002	0.0273	0.0000 *	0.0002	0.0002

Licensed to: MAUNSELL LIMITED
* Specified by user.

Workbook: Case (Main) (continued)

Compositions - Mole Fraction (continued)

Fluid Pkg: All

Name	MDEA to Recy	Plant Inlet	Water to Sat	HP Regen Bttms	Cool MDEA to Pump
Comp Mole Frac (Methane)	0.0000	0.8918	0.0000 *	0.0000	0.0000
Comp Mole Frac (Ethane)	0.0000	0.0105	0.0000 *	0.0000	0.0000
Comp Mole Frac (Propane)	0.0000	0.0014	0.0000 *	0.0000	0.0000
Comp Mole Frac (i-Butane)	0.0000	0.0003	0.0000 *	0.0000	0.0000
Comp Mole Frac (n-Butane)	0.0000	0.0003	0.0000 *	0.0000	0.0000
Comp Mole Frac (i-Pentane)	0.0000	0.0001	0.0000 *	0.0000	0.0000
Comp Mole Frac (n-Pentane)	0.0000	0.0000	0.0000 *	0.0000	0.0000
Comp Mole Frac (n-Hexane)	0.0000	0.0000	0.0000 *	0.0000	0.0000
Comp Mole Frac (n-Heptane)	0.0000	0.0000	0.0000 *	0.0000	0.0000
Comp Mole Frac (CO2)	0.0003	0.0878	0.0000 *	0.0003	0.0003
Comp Mole Frac (Nitrogen)	0.0000	0.0046	0.0000 *	0.0000	0.0000
Comp Mole Frac (H2O)	0.8725	0.0014	1.0000 *	0.8725	0.8725
Comp Mole Frac (MEAmine)	***	***	***	***	***
Comp Mole Frac (DEAmine)	***	***	***	***	***
Comp Mole Frac (MDEAmine)	0.1270	0.0000	0.0000 *	0.1270	0.1270
Comp Mole Frac (H2S)	0.0002	0.0018	0.0000 *	0.0002	0.0002

Name	HP Makeup Water	Condensate Out	Regen Mix	LP Condensate Out	Cond Vapour
Comp Mole Frac (Methane)	0.0000	0.0004	0.0000	0.0004	0.6712
Comp Mole Frac (Ethane)	0.0000	0.0000	0.0000	0.0000	0.0077
Comp Mole Frac (Propane)	0.0000	0.0000	0.0000	0.0000	0.0008
Comp Mole Frac (i-Butane)	0.0000	0.0000	0.0000	0.0000	0.0000
Comp Mole Frac (n-Butane)	0.0000	0.0000	0.0000	0.0000	0.0000
Comp Mole Frac (i-Pentane)	0.0000	0.0000	0.0000	0.0000	0.0000
Comp Mole Frac (n-Pentane)	0.0000	0.0000	0.0000	0.0000	0.0000
Comp Mole Frac (n-Hexane)	0.0000	0.0000	0.0000	0.0000	0.0000
Comp Mole Frac (n-Heptane)	0.0000	0.0000	0.0000	0.0000	0.0000
Comp Mole Frac (CO2)	0.0000	0.0003	0.0003	0.0003	0.2443
Comp Mole Frac (Nitrogen)	0.0000	0.0000	0.0000	0.0000	0.0018
Comp Mole Frac (H2O)	1.0000	0.9993	0.8725	0.9993	0.0743
Comp Mole Frac (MEAmine)	***	***	***	***	***
Comp Mole Frac (DEAmine)	***	***	***	***	***
Comp Mole Frac (MDEAmine)	0.0000	0.0001	0.1270	0.0001	0.0000
Comp Mole Frac (H2S)	0.0000	0.0000	0.0002	0.0000	0.0000

Name	Cond Liquids	Gas to Dehy	Gas to Flare		
Comp Mole Frac (Methane)	0.0000	0.9401	0.0062		
Comp Mole Frac (Ethane)	0.0000	0.0111	0.0001		
Comp Mole Frac (Propane)	0.0000	0.0015	0.0000		
Comp Mole Frac (i-Butane)	0.0000	0.0003	0.0000		
Comp Mole Frac (n-Butane)	0.0000	0.0004	0.0000		
Comp Mole Frac (i-Pentane)	0.0000	0.0001	0.0000		
Comp Mole Frac (n-Pentane)	0.0000	0.0000	0.0000		
Comp Mole Frac (n-Hexane)	0.0000	0.0000	0.0000		
Comp Mole Frac (n-Heptane)	0.0000	0.0000	0.0000		
Comp Mole Frac (CO2)	0.0001	0.0359	0.8138		
Comp Mole Frac (Nitrogen)	0.0000	0.0048	0.0000		
Comp Mole Frac (H2O)	0.9998	0.0059	0.1526		
Comp Mole Frac (MEAmine)	***	***	***		
Comp Mole Frac (DEAmine)	***	***	***		
Comp Mole Frac (MDEAmine)	0.0001	0.0000	0.0000		
Comp Mole Frac (H2S)	0.0000	0.0000	0.0272		

Energy Streams

Fluid Pkg: All

Name	RBLR Q	COND Q	Pump Q	LP Pump Duty	Optional Cooler Duty
Heat Flow (kW)	4500	1971	35.12	2.910	0.0000 *

Name	Cond Pump Duty
Heat Flow (kW)	0.2060

Licensed to: MAUNSELL LIMITED

* Specified by user.

Workbook: Case (Main) (continued)

Streams

Fluid Pkg: All

Name	MDEA to CONT	Sour Gas	Gas to Contactor	FWKO	Sweet Gas
Vapour Fraction	0.0000	1.0000	1.0000	0.0000	1.0000
Temperature (C)	48.00 *	48.00 *	46.44	46.44	48.58
Pressure (bar_g)	19.65 *	20.00 *	20.00	20.00	19.00
Molar Flow (Nm3/h(gas))	3.693e+004	2.683e+004 *	2.687e+004	0.0000	2.546e+004
Mass Flow (kg/h)	5.086e+004	2.251e+004	2.254e+004	0.0000	1.971e+004
Std Ideal Liq Vol Flow (m3/h)	49.96 *	64.47	64.50	0.0000	61.03
Heat Flow (kW)	-8599	4442	4427	0.0000	4276
Molar Enthalpy (kJ/kgmole)	-1.879e+004	1.336e+004	1.330e+004	-3.232e+004	1.355e+004
Higher Heating Value (MJ/m3)	33.55	34.71	34.67	2.039	36.52

Name	Rich MDEA	MDEA to Flash TK	Flash Vap	Rich to L/R	Regen Feed
Vapour Fraction	0.0000	0.0002	1.0000	0.0000	0.0001
Temperature (C)	67.85	67.83	67.83	67.83	90.00 *
Pressure (bar_g)	20.00	5.192 *	5.192	5.192	4.503
Molar Flow (Nm3/h(gas))	3.833e+004	3.833e+004	9.210	3.832e+004	3.832e+004
Mass Flow (kg/h)	5.369e+004	5.369e+004	7.871	5.368e+004	5.368e+004
Std Ideal Liq Vol Flow (m3/h)	53.43	53.43	2.152e-002	53.41	53.41
Heat Flow (kW)	-8451	-8451	1.593	-8453	-7302
Molar Enthalpy (kJ/kgmole)	-1.779e+004	-1.779e+004	1.396e+004	-1.780e+004	-1.538e+004
Higher Heating Value (MJ/m3)	32.23	32.23	32.76	32.23	32.23

Name	Regen Bttms	Acid Gas	Makeup H2O	MDEA to Cool	MDEA to Pump
Vapour Fraction	0.0000	1.0000	0.0000	0.0000	0.0000
Temperature (C)	115.3	60.04	21.11 *	93.35	47.28
Pressure (bar_g)	0.5000	0.3000	0.4691 *	1.311	0.9658
Molar Flow (Nm3/h(gas))	3.656e+004	1763	372.5	3.692e+004	3.692e+004
Mass Flow (kg/h)	5.056e+004	3124	299.4	5.085e+004	5.085e+004
Std Ideal Liq Vol Flow (m3/h)	49.66	3.748	0.3000 *	49.95	49.95
Heat Flow (kW)	-5010	235.8	-158.8	-6303	-8631
Molar Enthalpy (kJ/kgmole)	-1.106e+004	1.079e+004	-3.439e+004	-1.377e+004	-1.886e+004
Higher Heating Value (MJ/m3)	33.88	1.017	1.989	33.56	33.56

Name	MDEA to Recy	Plant Inlet	Water to Sat	HP Regen Bttms	Cool MDEA to Pump
Vapour Fraction	0.0000	1.0000	0.0000	0.0000	0.0000
Temperature (C)	48.00 *	46.44	48.00 *	114.9	47.28
Pressure (bar_g)	19.65	20.00	20.00 *	2.000 *	0.4658
Molar Flow (Nm3/h(gas))	3.692e+004	2.687e+004	38.20	3.692e+004	3.692e+004
Mass Flow (kg/h)	5.085e+004	2.254e+004	30.70 *	5.085e+004	5.085e+004
Std Ideal Liq Vol Flow (m3/h)	49.95	64.50	3.076e-002	49.95	49.95
Heat Flow (kW)	-8595	4427	-15.32	-5152	-8631
Molar Enthalpy (kJ/kgmole)	-1.879e+004	1.330e+004	-3.237e+004	-1.126e+004	-1.886e+004
Higher Heating Value (MJ/m3)	33.56	34.67	1.989	33.56	33.56

Name	HP Makeup Water	Condensate Out	Regen Mix	LP Condensate Out	Cond Vapour
Vapour Fraction	0.0000	0.0000	0.0000	0.0005	1.0000
Temperature (C)	21.71	48.14	114.9	48.12	48.12
Pressure (bar_g)	19.00 *	20.00	0.5000	0.5000 *	0.5000
Molar Flow (Nm3/h(gas))	372.5	361.5	3.692e+004	361.5	0.1839
Mass Flow (kg/h)	299.4	290.8	5.085e+004	290.8	0.1902
Std Ideal Liq Vol Flow (m3/h)	0.3000	0.2916	49.95	0.2916	4.195e-004
Heat Flow (kW)	-158.6	-144.8	-5155	-144.8	2.872e-002
Molar Enthalpy (kJ/kgmole)	-3.435e+004	-3.233e+004	-1.127e+004	-3.233e+004	1.260e+004
Higher Heating Value (MJ/m3)	1.989	2.023	33.56	2.023	26.15

Licensed to: MAUNSELL LIMITED
* Specified by user.

Workbook: Case (Main) (continued)

Streams (continued)

Fluid Pkg: All

Name	Cond Liquids	Gas to Dehy	Gas to Flare	RBLR Q	COND Q
Vapour Fraction	0.0000	0.9999	1.0000	---	---
Temperature (C)	48.12	47.43	60.04	---	---
Pressure (bar_g)	0.5000	19.00	0.3000	---	---
Molar Flow (Nm3/h(gas))	361.3	2.547e+004	1773	---	---
Mass Flow (kg/h)	290.6	1.972e+004	3132	---	---
Std Ideal Liq Vol Flow (m3/h)	0.2912	61.04	3.770	---	---
Heat Flow (kW)	-144.9	4263	237.5	4500	1971
Molar Enthalpy (kJ/kgmole)	-3.235e+004	1.350e+004	1.081e+004	---	---
Higher Heating Value (MJ/m3)	2.010	36.51	1.185	---	---

Name	Pump Q	LP Pump Duty	Optional Cooler Duty	Cond Pump Duty	
Vapour Fraction	---	---	---	---	
Temperature (C)	---	---	---	---	
Pressure (bar_g)	---	---	---	---	
Molar Flow (Nm3/h(gas))	---	---	---	---	
Mass Flow (kg/h)	---	---	---	---	
Std Ideal Liq Vol Flow (m3/h)	---	---	---	---	
Heat Flow (kW)	35.12	2.910	0.0000 *	0.2060	
Molar Enthalpy (kJ/kgmole)	---	---	---	---	
Higher Heating Value (MJ/m3)	---	---	---	---	

Licensed to: MAUNSELL LIMITED
* Specified by user.

Workbook: Case (Main)

Material Streams

Fluid Pkg: All

Name		TEG Feed	Gas to Dehy	Rich TEG	Regen Bttms	Lean from L/R
Vapour Fraction		0.0000	1.0000	0.0000	0.0000	0.0000
Temperature	(C)	32.52 *	50.00 *	31.79	210.0	32.47
Pressure	(bar_g)	18.49 *	19.00 *	18.50	0.1000	18.99
Mass Flow	(kg/h)	1200 *	1.826e+004 *	1295	1198	1200
Molar Flow	(Nm3/h(gas))	189.8	2.500e+004 *	308.1	191.1	189.8
Liquid Volume Flow	(m3/h)	1.065	59.99	1.163	1.063	1.065
Heat Flow	(kW)	-1797	-2.321e+004	-2215	-1645	-1797
Name		Regen Feed	Steam	MakeUp TEG	TEG to Pump	Pump Out
Vapour Fraction		0.0413	1.0000	0.0000	0.0000	0.0000
Temperature	(C)	126.0	99.45	15.56 *	148.6	148.3
Pressure	(bar_g)	0.1000 *	0.0000	0.1000	0.1000	19.00 *
Mass Flow	(kg/h)	1295	96.50	3.600	1200	1200
Molar Flow	(Nm3/h(gas))	308.1	117.0	0.5387	189.8	189.8
Liquid Volume Flow	(m3/h)	1.163	9.917e-002	3.190e-003	1.065	1.065
Heat Flow	(kW)	-2120	-344.9	-5.348	-1703	-1702
Name		TEG to Recy	Sales Gas	Warm Glycol	Cool Gas to Dehy	Strip Gas
Vapour Fraction		0.0000	1.0000	0.0000	0.9975	1.0000
Temperature	(C)	32.52	32.60	130.0 *	30.00 *	150.0 *
Pressure	(bar_g)	18.49	18.00	17.81	18.50	0.5000 *
Mass Flow	(kg/h)	1200	1.816e+004	1295	1.826e+004	3.649
Molar Flow	(Nm3/h(gas))	189.8	2.488e+004	308.1	2.500e+004	5.000 *
Liquid Volume Flow	(m3/h)	1.065	59.89	1.163	59.99	1.204e-002
Heat Flow	(kW)	-1797	-2.306e+004	-2120	-2.348e+004	-4.330
Name		Stripped TEG	Gas Out	Waste Gas	Gas to Flare	Water
Vapour Fraction		0.0000	1.0000	0.9931	1.0000	0.0000
Temperature	(C)	148.9	150.0	112.8	112.8	112.8
Pressure	(bar_g)	0.1000	0.0000	0.0000	0.0000	0.0000
Mass Flow	(kg/h)	1196	5.724	102.2	99.23	2.992
Molar Flow	(Nm3/h(gas))	189.3	6.849	123.9	123.0	0.8490
Liquid Volume Flow	(m3/h)	1.062	1.377e-002	0.1129	0.1102	2.694e-003
Heat Flow	(kW)	-1698	-10.64	-355.5	-350.2	-5.312
Name		Cool Regen Bttms				
Vapour Fraction		0.0000				
Temperature	(C)	150.0 *				
Pressure	(bar_g)	0.1000				
Mass Flow	(kg/h)	1198				
Molar Flow	(Nm3/h(gas))	191.1				
Liquid Volume Flow	(m3/h)	1.063				
Heat Flow	(kW)	-1704				

Compositions - Mass Flows

Fluid Pkg: All

Name		TEG Feed	Gas to Dehy	Rich TEG	Regen Bttms	Lean from L/R
Comp Mass Flow (Nitrogen)	(kg/h)	0.0023 *	165.5979 *	0.0644	0.0000	0.0023
Comp Mass Flow (CO2)	(kg/h)	0.0000 *	0.0000 *	0.0000	0.0000	0.0000
Comp Mass Flow (H2S)	(kg/h)	0.0000 *	0.1200 *	0.0007	0.0000	0.0000
Comp Mass Flow (Methane)	(kg/h)	0.1092 *	17451.8058 *	1.1152	0.0000	0.1092
Comp Mass Flow (Ethane)	(kg/h)	0.0057 *	409.1769 *	0.0813	0.0000	0.0057
Comp Mass Flow (Propane)	(kg/h)	0.0018 *	78.6952 *	0.0270	0.0000	0.0018
Comp Mass Flow (i-Butane)	(kg/h)	0.0003 *	19.4489 *	0.0030	0.0000	0.0003
Comp Mass Flow (n-Butane)	(kg/h)	0.0005 *	25.9319 *	0.0048	0.0000	0.0005
Comp Mass Flow (i-Pentane)	(kg/h)	0.0002 *	8.0475 *	0.0012	0.0000	0.0002
Comp Mass Flow (n-Pentane)	(kg/h)	0.0000 *	0.0000 *	0.0000	0.0000	0.0000
Comp Mass Flow (TEGlycol)	(kg/h)	1190.2427 *	0.0000 *	1190.1660	1187.3024	1190.2423
Comp Mass Flow (H2O)	(kg/h)	9.6375 *	96.4489 *	103.5135	11.1722	9.6378

Licensed to: MAUNSELL LIMITED
* Specified by user.

Workbook: Case (Main) (continued)

Compositions - Mass Flows (continued)

Fluid Pkg: All

Name		Regen Feed	Steam	MakeUp TEG	TEG to Pump	Pump Out
Comp Mass Flow (Nitrogen)	(kg/h)	0.0644	0.0644	0.0000 *	0.0023	0.0023
Comp Mass Flow (CO2)	(kg/h)	0.0000	0.0000	0.0000 *	0.0000	0.0000
Comp Mass Flow (H2S)	(kg/h)	0.0007	0.0007	0.0000 *	0.0000	0.0000
Comp Mass Flow (Methane)	(kg/h)	1.1152	1.1152	0.0000 *	0.1092	0.1092
Comp Mass Flow (Ethane)	(kg/h)	0.0813	0.0813	0.0000 *	0.0057	0.0057
Comp Mass Flow (Propane)	(kg/h)	0.0270	0.0270	0.0000 *	0.0018	0.0018
Comp Mass Flow (i-Butane)	(kg/h)	0.0030	0.0030	0.0000 *	0.0003	0.0003
Comp Mass Flow (n-Butane)	(kg/h)	0.0048	0.0048	0.0000 *	0.0005	0.0005
Comp Mass Flow (i-Pentane)	(kg/h)	0.0012	0.0012	0.0000 *	0.0002	0.0002
Comp Mass Flow (n-Pentane)	(kg/h)	0.0000	0.0000	0.0000 *	0.0000	0.0000
Comp Mass Flow (TEGlycol)	(kg/h)	1190.1660	2.8636	3.5986 *	1190.2423	1190.2423
Comp Mass Flow (H2O)	(kg/h)	103.5135	92.3413	0.0013 *	9.6378	9.6378
Name		TEG to Recy	Sales Gas	Warm Glycol	Cool Gas to Dehy	Strip Gas
Comp Mass Flow (Nitrogen)	(kg/h)	0.0023	165.5357	0.0644	165.5979	0.0333 *
Comp Mass Flow (CO2)	(kg/h)	0.0000	0.0000	0.0000	0.0000	0.0000 *
Comp Mass Flow (H2S)	(kg/h)	0.0000	0.1193	0.0007	0.1200	0.0000 *
Comp Mass Flow (Methane)	(kg/h)	0.1092	17450.7999	1.1152	17451.8058	3.5066 *
Comp Mass Flow (Ethane)	(kg/h)	0.0057	409.1013	0.0813	409.1769	0.0822 *
Comp Mass Flow (Propane)	(kg/h)	0.0018	78.6700	0.0270	78.6952	0.0158 *
Comp Mass Flow (i-Butane)	(kg/h)	0.0003	19.4462	0.0030	19.4489	0.0039 *
Comp Mass Flow (n-Butane)	(kg/h)	0.0005	25.9276	0.0048	25.9319	0.0052 *
Comp Mass Flow (i-Pentane)	(kg/h)	0.0002	8.0465	0.0012	8.0475	0.0016 *
Comp Mass Flow (n-Pentane)	(kg/h)	0.0000	0.0000	0.0000	0.0000	0.0000 *
Comp Mass Flow (TEGlycol)	(kg/h)	1190.2423	0.0766	1190.1660	0.0000	0.0001 *
Comp Mass Flow (H2O)	(kg/h)	9.6378	2.5729	103.5135	96.4489	0.0007 *
Name		Stripped TEG	Gas Out	Waste Gas	Gas to Flare	Water
Comp Mass Flow (Nitrogen)	(kg/h)	0.0023	0.0310	0.0954	0.0954	0.0000
Comp Mass Flow (CO2)	(kg/h)	0.0000	0.0000	0.0000	0.0000	0.0000
Comp Mass Flow (H2S)	(kg/h)	0.0000	0.0000	0.0007	0.0007	0.0000
Comp Mass Flow (Methane)	(kg/h)	0.1092	3.3974	4.5126	4.5125	0.0000
Comp Mass Flow (Ethane)	(kg/h)	0.0057	0.0765	0.1578	0.1578	0.0000
Comp Mass Flow (Propane)	(kg/h)	0.0018	0.0141	0.0411	0.0411	0.0000
Comp Mass Flow (i-Butane)	(kg/h)	0.0003	0.0036	0.0066	0.0066	0.0000
Comp Mass Flow (n-Butane)	(kg/h)	0.0005	0.0047	0.0095	0.0095	0.0000
Comp Mass Flow (i-Pentane)	(kg/h)	0.0002	0.0015	0.0026	0.0026	0.0000
Comp Mass Flow (n-Pentane)	(kg/h)	0.0000	0.0000	0.0000	0.0000	0.0000
Comp Mass Flow (TEGlycol)	(kg/h)	1186.6437	0.6588	3.5224	0.8977	2.6247
Comp Mass Flow (H2O)	(kg/h)	9.6365	1.5365	93.8777	93.5102	0.3675
Name		Cool Regen Bttms				
Comp Mass Flow (Nitrogen)	(kg/h)	0.0000				
Comp Mass Flow (CO2)	(kg/h)	0.0000				
Comp Mass Flow (H2S)	(kg/h)	0.0000				
Comp Mass Flow (Methane)	(kg/h)	0.0000				
Comp Mass Flow (Ethane)	(kg/h)	0.0000				
Comp Mass Flow (Propane)	(kg/h)	0.0000				
Comp Mass Flow (i-Butane)	(kg/h)	0.0000				
Comp Mass Flow (n-Butane)	(kg/h)	0.0000				
Comp Mass Flow (i-Pentane)	(kg/h)	0.0000				
Comp Mass Flow (n-Pentane)	(kg/h)	0.0000				
Comp Mass Flow (TEGlycol)	(kg/h)	1187.3024				
Comp Mass Flow (H2O)	(kg/h)	11.1722				

Licensed to: MAUNSELL LIMITED
* Specified by user.

Workbook: Case (Main) (continued)

Compositions - Mole Fraction

Fluid Pkg: All

Name	TEG Feed	Gas to Dehy	Rich TEG	Regen Bttms	Lean from L/R
Comp Mole Frac (Nitrogen)	0.0000 *	0.0053 *	0.0002	0.0000	0.0000
Comp Mole Frac (CO2)	0.0000 *	0.0000 *	0.0000	0.0000	0.0000
Comp Mole Frac (H2S)	0.0000 *	0.0000 *	0.0000	0.0000	0.0000
Comp Mole Frac (Methane)	0.0008 *	0.9753 *	0.0051	0.0000	0.0008
Comp Mole Frac (Ethane)	0.0000 *	0.0122 *	0.0002	0.0000	0.0000
Comp Mole Frac (Propane)	0.0000 *	0.0016 *	0.0000	0.0000	0.0000
Comp Mole Frac (i-Butane)	0.0000 *	0.0003 *	0.0000	0.0000	0.0000
Comp Mole Frac (n-Butane)	0.0000 *	0.0004 *	0.0000	0.0000	0.0000
Comp Mole Frac (i-Pentane)	0.0000 *	0.0001 *	0.0000	0.0000	0.0000
Comp Mole Frac (n-Pentane)	0.0000 *	0.0000 *	0.0000	0.0000	0.0000
Comp Mole Frac (TEGlycol)	0.9360 *	0.0000 *	0.5765	0.9273	0.9360
Comp Mole Frac (H2O)	0.0632 *	0.0048 *	0.4180	0.0727	0.0632

Name	Regen Feed	Steam	MakeUp TEG	TEG to Pump	Pump Out
Comp Mole Frac (Nitrogen)	0.0002	0.0004	0.0000 *	0.0000	0.0000
Comp Mole Frac (CO2)	0.0000	0.0000	0.0000 *	0.0000	0.0000
Comp Mole Frac (H2S)	0.0000	0.0000	0.0000 *	0.0000	0.0000
Comp Mole Frac (Methane)	0.0051	0.0133	0.0000 *	0.0008	0.0008
Comp Mole Frac (Ethane)	0.0002	0.0005	0.0000 *	0.0000	0.0000
Comp Mole Frac (Propane)	0.0000	0.0001	0.0000 *	0.0000	0.0000
Comp Mole Frac (i-Butane)	0.0000	0.0000	0.0000 *	0.0000	0.0000
Comp Mole Frac (n-Butane)	0.0000	0.0000	0.0000 *	0.0000	0.0000
Comp Mole Frac (i-Pentane)	0.0000	0.0000	0.0000 *	0.0000	0.0000
Comp Mole Frac (n-Pentane)	0.0000	0.0000	0.0000 *	0.0000	0.0000
Comp Mole Frac (TEGlycol)	0.5765	0.0037	0.9970 *	0.9360	0.9360
Comp Mole Frac (H2O)	0.4180	0.9819	0.0030 *	0.0632	0.0632

Name	TEG to Recy	Sales Gas	Warm Glycol	Cool Gas to Dehy	Strip Gas
Comp Mole Frac (Nitrogen)	0.0000	0.0053	0.0002	0.0053	0.0053 *
Comp Mole Frac (CO2)	0.0000	0.0000	0.0000	0.0000	0.0000 *
Comp Mole Frac (H2S)	0.0000	0.0000	0.0000	0.0000	0.0000 *
Comp Mole Frac (Methane)	0.0008	0.9799	0.0051	0.9753	0.9798 *
Comp Mole Frac (Ethane)	0.0000	0.0123	0.0002	0.0122	0.0123 *
Comp Mole Frac (Propane)	0.0000	0.0016	0.0000	0.0016	0.0016 *
Comp Mole Frac (i-Butane)	0.0000	0.0003	0.0000	0.0003	0.0003 *
Comp Mole Frac (n-Butane)	0.0000	0.0004	0.0000	0.0004	0.0004 *
Comp Mole Frac (i-Pentane)	0.0000	0.0001	0.0000	0.0001	0.0001 *
Comp Mole Frac (n-Pentane)	0.0000	0.0000	0.0000	0.0000	0.0000 *
Comp Mole Frac (TEGlycol)	0.9360	0.0000	0.5765	0.0000	0.0000 *
Comp Mole Frac (H2O)	0.0632	0.0001	0.4180	0.0048	0.0002 *

Name	Stripped TEG	Gas Out	Waste Gas	Gas to Flare	Water
Comp Mole Frac (Nitrogen)	0.0000	0.0036	0.0006	0.0006	0.0000
Comp Mole Frac (CO2)	0.0000	0.0000	0.0000	0.0000	0.0000
Comp Mole Frac (H2S)	0.0000	0.0000	0.0000	0.0000	0.0000
Comp Mole Frac (Methane)	0.0008	0.6930	0.0509	0.0513	0.0000
Comp Mole Frac (Ethane)	0.0000	0.0083	0.0009	0.0010	0.0000
Comp Mole Frac (Propane)	0.0000	0.0010	0.0002	0.0002	0.0000
Comp Mole Frac (i-Butane)	0.0000	0.0002	0.0000	0.0000	0.0000
Comp Mole Frac (n-Butane)	0.0000	0.0003	0.0000	0.0000	0.0000
Comp Mole Frac (i-Pentane)	0.0000	0.0001	0.0000	0.0000	0.0000
Comp Mole Frac (n-Pentane)	0.0000	0.0000	0.0000	0.0000	0.0000
Comp Mole Frac (TEGlycol)	0.9358	0.0144	0.0042	0.0011	0.4614
Comp Mole Frac (H2O)	0.0633	0.2791	0.9431	0.9458	0.5385

Licensed to: MAUNSELL LIMITED
* Specified by user.

Workbook: Case (Main) (continued)

Compositions - Mole Fraction (continued)

Fluid Pkg: All

Name	Cool Regen Bttms				
Comp Mole Frac (Nitrogen)	0.0000				
Comp Mole Frac (CO2)	0.0000				
Comp Mole Frac (H2S)	0.0000				
Comp Mole Frac (Methane)	0.0000				
Comp Mole Frac (Ethane)	0.0000				
Comp Mole Frac (Propane)	0.0000				
Comp Mole Frac (i-Butane)	0.0000				
Comp Mole Frac (n-Butane)	0.0000				
Comp Mole Frac (i-Pentane)	0.0000				
Comp Mole Frac (n-Pentane)	0.0000				
Comp Mole Frac (TEGlycol)	0.9273				
Comp Mole Frac (H2O)	0.0727				

Energy Streams

Fluid Pkg: All

Name	Pump Q	Cond Q	Rblr Q	Cooler Duty	InletCoolerDuty
Heat Flow (kW)	0.8275	121.3	251.4	58.78	270.9
Name	**Glycol Cooler Duty**				
Heat Flow (kW)	0.0000 *				

Licensed to: MAUNSELL LIMITED
* Specified by user.

APPENDIX M – Piping and Instrumentation Diagrams

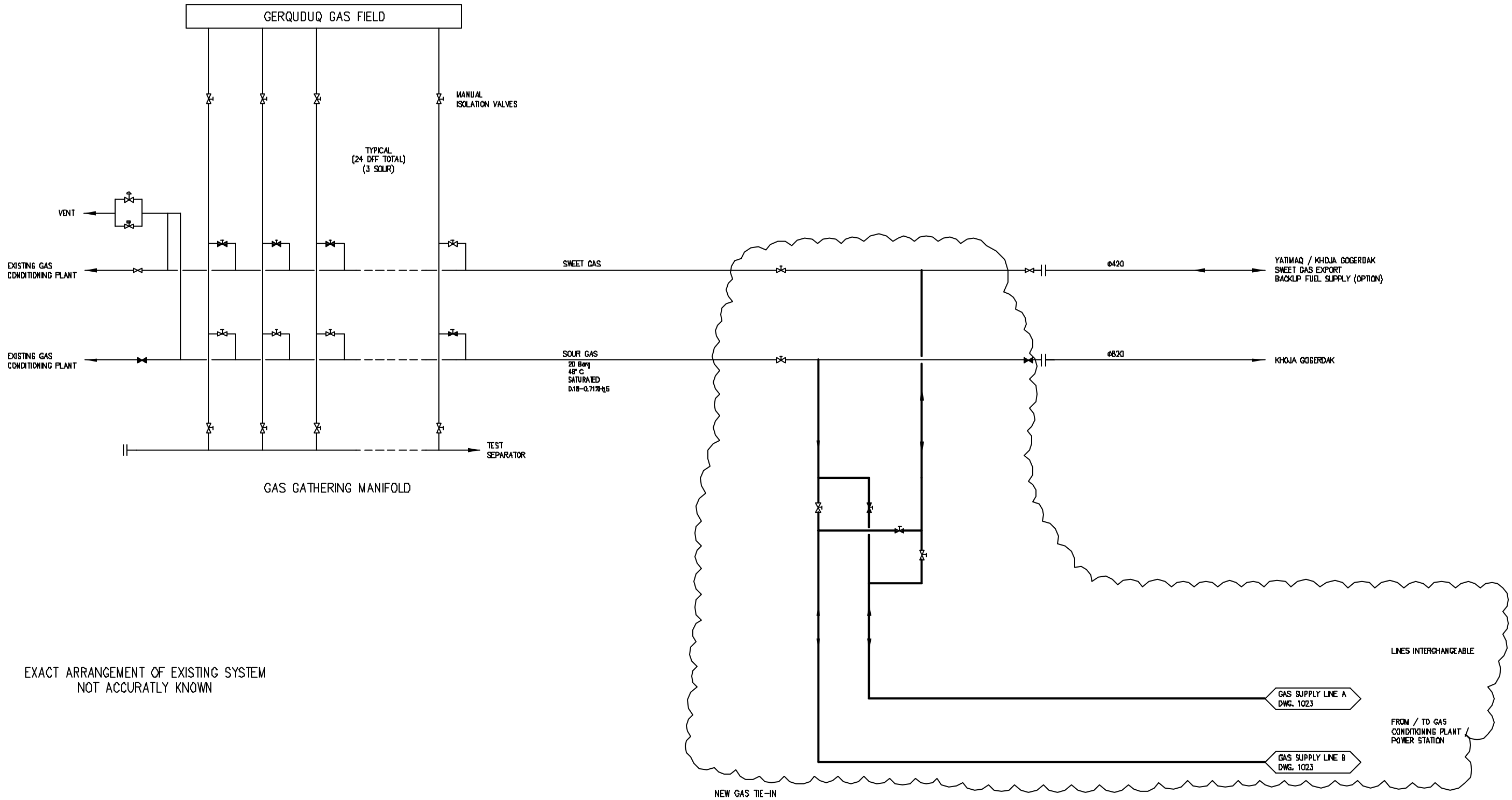

© Copyright Maunsell Limited, 2003.

This drawing is confidential and shall only be used for the purposes of this project.

No.	BY	DATE	DESCRIPTION	APPD
C	ES	MAY 15	ISSUED FOR FINAL REPORT	
B	ES	MAY 15	CONDITIONED RETURN FOR YATIMTAQ ADDED	WSC
A	ES	APR.15	ISSUED FOR REPORT	

Scales

N.T.S.

THE SIGNING OF THIS TITLE BLOCK CONFIRMS THE DESIGN AND DRAFTING OF THIS PROJECT HAVE BEEN PREPARED AND CHECKED IN ACCORDANCE WITH THE MAUNSELL QUALITY ASSURANCE SYSTEM CERTIFIED TO AS/NZS ISO 9001-2000

DESIGNED	NP	CHECKED	WSC
DRAWN	ES	CHECKED	
APPROVED	WSC	DATE	APR.15

CAD file: H:\Data_112864634_AF Sheberghan Feasibility\CAD\Working\112864634-1022.dwg
Last saved: Thu, 29 May 2008 04:11 pm

maunsell

Maunsell Limited
AN AECOM COMPANY

AEAI/USAID
AEAI Delivery Order No: BD1-MAU-1

SHEBERGHAN POWER STATION FEASIBILITY STUDY

P&ID
GERQUDUQ GAS MANIFOLD

Status	Dwg No.	Rev.
ISSUE	112864634-1022	C

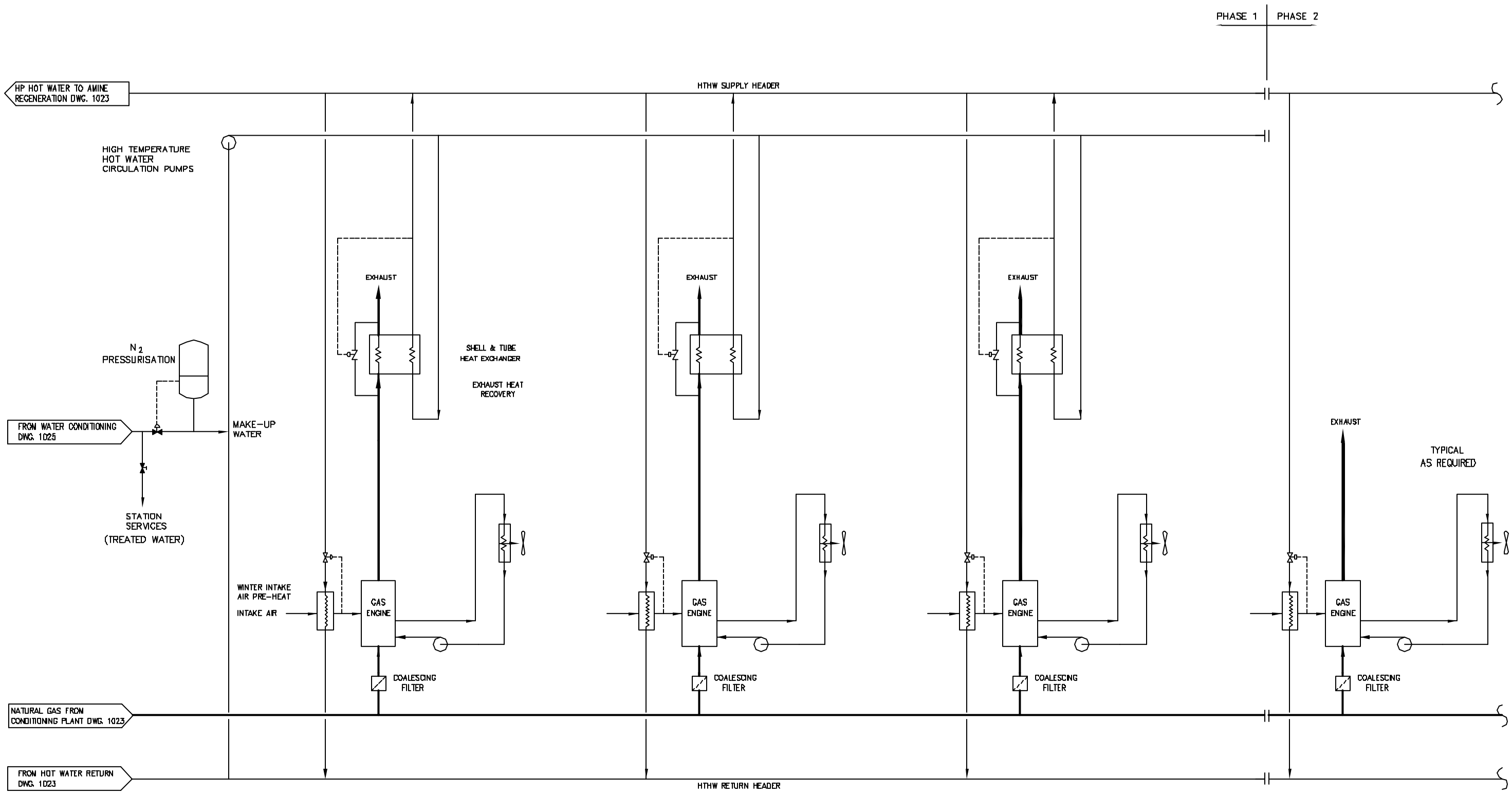

© Copyright Maunsell Limited, 2003.

This drawing is confidential and shall only be used for the purposes of this project.

No.	BY	DATE	DESCRIPTION	APPD
C	ES	MAY 15	ISSUED FOR FINAL REPORT	
B	ES	MAY 15	STEAM SYSTEM REMOVED	WSC
A	ES	APR.15	ISSUED FOR REPORT	

Scales

N.T.S.

THE SIGNING OF THIS TITLE BLOCK CONFIRMS THE DESIGN AND DRAFTING OF THIS PROJECT HAVE BEEN PREPARED AND CHECKED IN ACCORDANCE WITH THE MAUNSELL QUALITY ASSURANCE SYSTEM CERTIFIED TO AS/NZS ISO 9001-2000

DESIGNED	NP	CHECKED	WSC
DRAWN	ES	CHECKED	
APPROVED	WSC	DATE	APR.15

CAD file: H:\Data_112864634_AF Sheberghan Feasibility\CAD\Working\112864634-1024.dwg
Last saved: Thu, 26 May 2006 04:13 pm

maunsell

Maunsell Limited
AN AECOM COMPANY

AEAI/USAID
AEAI Delivery Order No: 801-MAU-1

SHEBERGHAN POWER STATION FEASIBILITY STUDY

P&ID (PRELIMINARY)
POWER PLANT

Status: ISSUE

Drg No: 112864634-1024

Rev: C

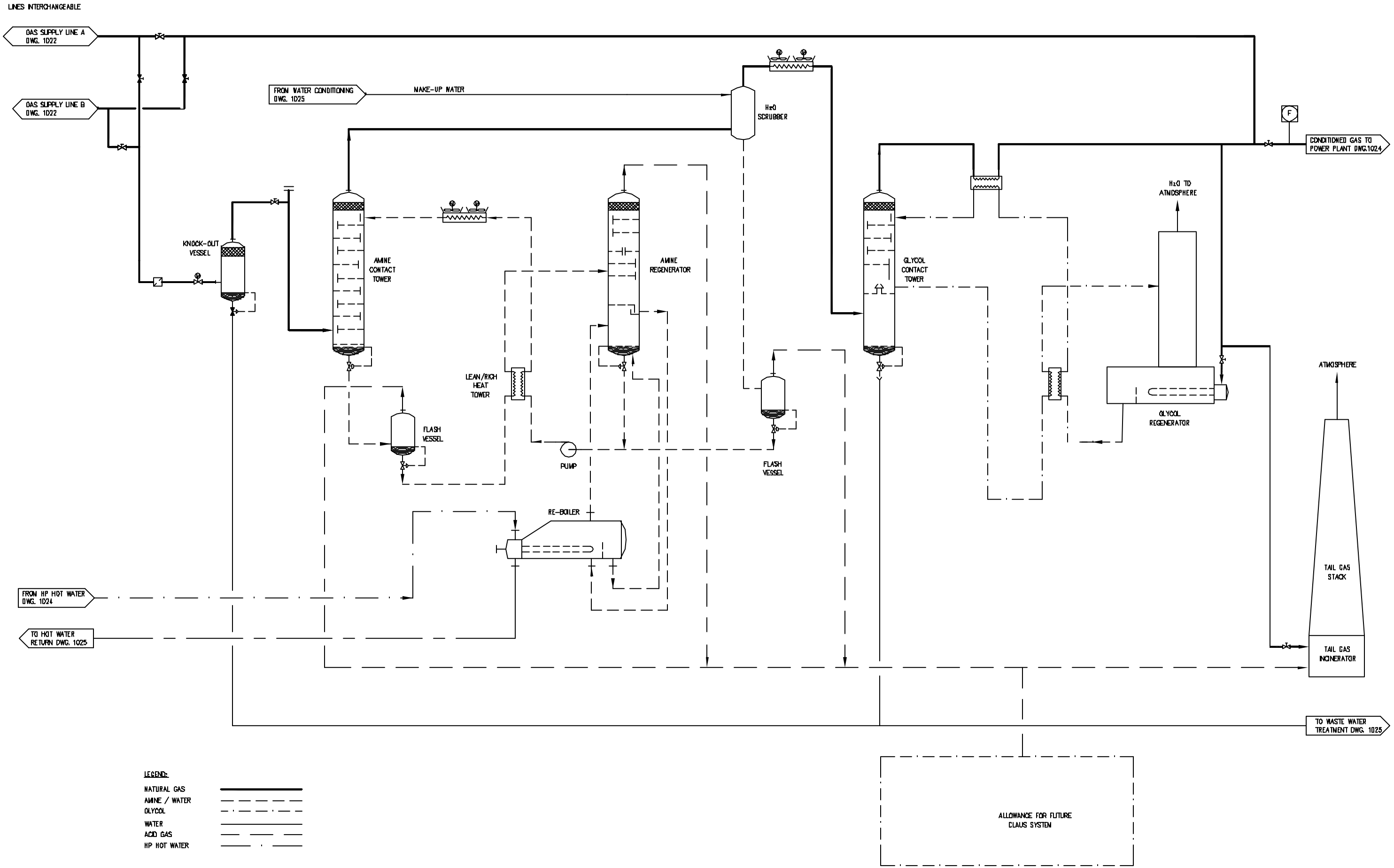

© Copyright Maunsell Limited, 2003.
This drawing is confidential and shall only be used for the purposes of this project.

No.	BY	DATE	DESCRIPTION	APPD
C	ES	MAY 15	ISSUED FOR FINAL REPORT	
B	ES	MAY 15	CLAUS & STEAM SYSTEM REMOVED	WSC
A	ES	APR.15	ISSUED FOR REPORT	

Scales
N.T.S.

THE SIGNING OF THIS TITLE BLOCK CONFIRMS THE DESIGN AND DRAFTING OF THIS PROJECT HAVE BEEN PREPARED AND CHECKED IN ACCORDANCE WITH THE MAUNSELL QUALITY ASSURANCE SYSTEM CERTIFIED TO AS/NZS ISO 9001-2000

DESIGNED	NP	CHECKED	WSC
DRAWN	ES	CHECKED	
APPROVED	WSC	DATE	APR.15

CAD File: H:\Dwgs_112B\112B64634-AF Sheberghan Feasibility\CAD\Working\112B64634-1123.dwg
Last saved: Thu, 28 May 2004 04:12 pm

maunsell
Maunsell Limited
AN AECOM COMPANY

AEAI/USAID
AEAI Delivery Order No: 801-MAU-1

SHEBERGHAN POWER STATION FEASIBILITY STUDY
P&ID (PRELIMINARY)
GAS CONDITIONING

Status: ISSUE
Drg No: 112B64634-1123
Rev: C

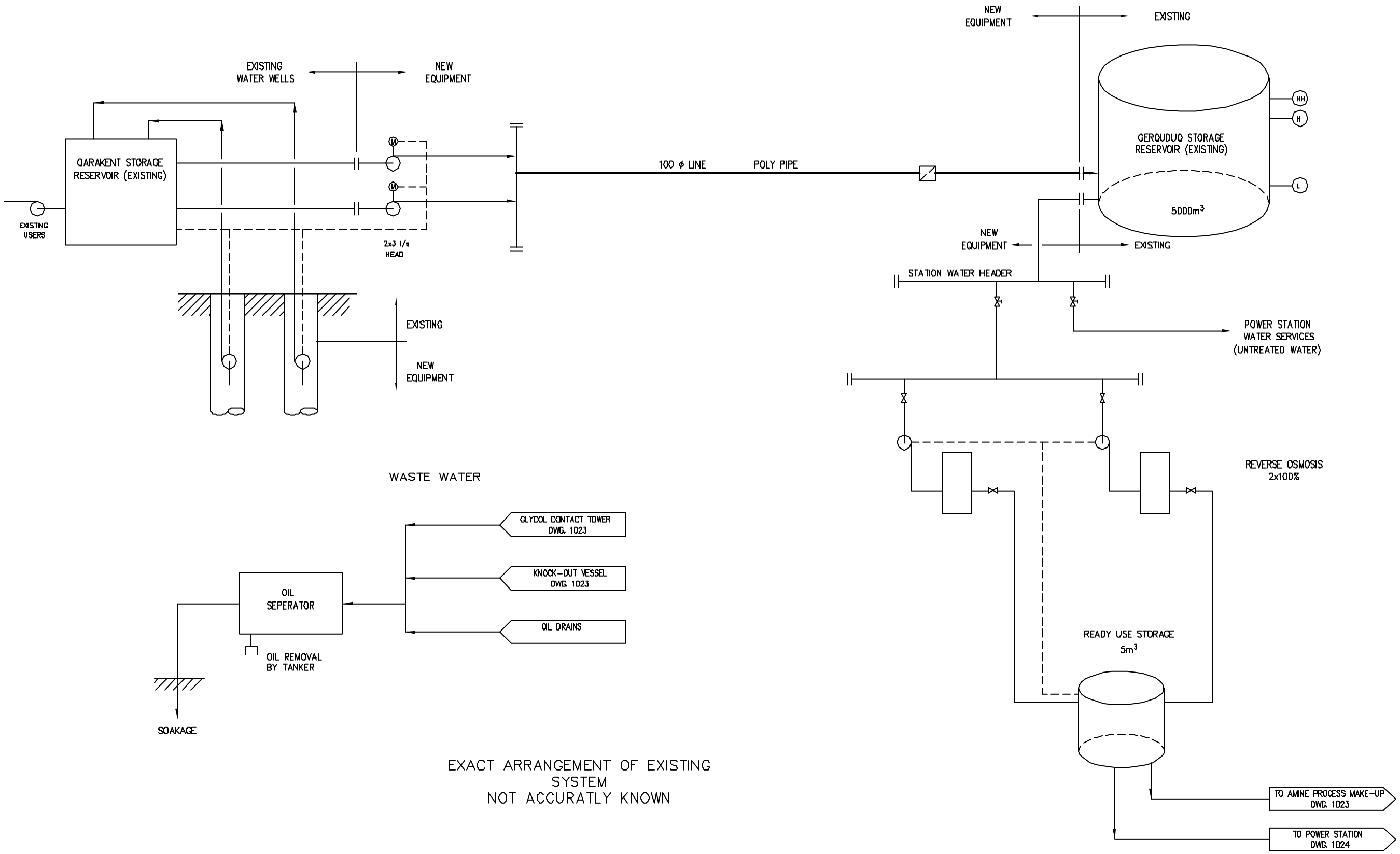

© Copyright Maunsell Limited, 2003.

This drawing is confidential and shall only be used for the purposes of this project.

No.	BY	DATE	DESCRIPTION	APPD
C	ES	MAY 15	ISSUED FOR FINAL REPORT	
B	ES	MAY 15	WASTE WATER ADDED	WSC
A	ES	APR.15	ISSUED FOR REPORT	

Scales

N.T.S.

THE SIGNING OF THIS TITLE BLOCK CONFIRMS THE DESIGN AND DRAFTING OF THIS PROJECT HAVE BEEN PREPARED AND CHECKED IN ACCORDANCE WITH THE MAUNSELL QUALITY ASSURANCE SYSTEM CERTIFIED TO AS/NZS ISO 9001-2000

DESIGNED	M.P.	CHECKED	V.S.C.
DRAWN	E.S.	CHECKED	
APPROVED	W.S.C.	DATE	APR.15

CAD file: H:\MAUdata__112864634_AF Sheberghan Feasibility\CAD\Working\112864634-1025.dwg
Last saved: Thu, 26 May 2006 04:13 pm

maunsell

Maunsell Limited
AN AECOM COMPANY

AEAI/USAID
AEAI Delivery Order No: 801-MAU-1

SHEBERGHAN POWER STATION FEASIBILITY STUDY

P&ID (PRELIMINARY)
WATER SUPPLY & DISPOSAL

Status: ISSUE

Drg No: 112864634-1025

Rev: C

APPENDIX N –Single Line Diagrams

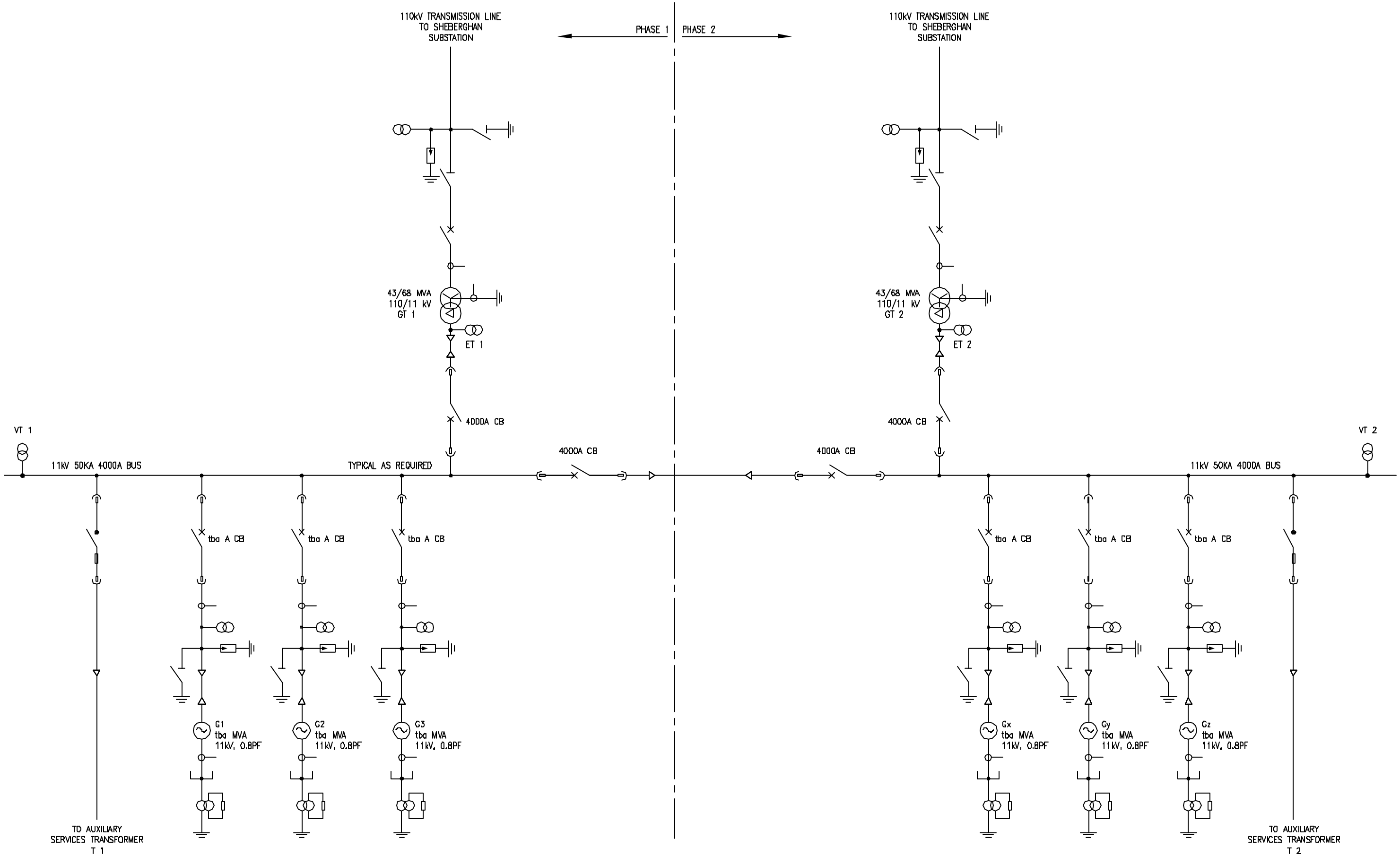

© Copyright Maunsell Limited, 2013.

This drawing is confidential and shall only be used for the purposes of this project.

No.	BY	DATE	DESCRIPTION	APPD
C	ES	MAY 15	ISSUED FOR FINAL REPORT	
B	ES	MAY 15	STAGE 2 ADDED	WSC
A	ES	MAY 15	ISSUED FOR REPORT	

Scales

N.T.S.

THE SIGNING OF THIS TITLE BLOCK CONFIRMS THE DESIGN AND DRAFTING OF THIS PROJECT HAVE BEEN PREPARED AND CHECKED IN ACCORDANCE WITH THE MAUNSELL QUALITY ASSURANCE SYSTEM CERTIFIED TO AS/NZS ISO 9001-2000

DESIGNED	NHW	CHECKED	DJP
DRAWN	FA	CHECKED	
APPROVED	WSC	DATE	MAY 15

CAD file H:\Data_112B\112B64634_AF Sheberghan Feasibility\CAD\Working\112B64634-1512.dwg
Last saved: Thu, 28 May 2015 04:22 pm

maunsell

Maunsell Limited
AECOM company

AEAI/USAID
AEAI Delivery Order No: 8D1-MAU-1

SHEBERGHAN POWER STATION FEASIBILITY STUDY

POWER PLANT
11 kV SINGLE LINE DIAGRAM

Status	Drg No	Rev
ISSUE	112B64634-1512	C

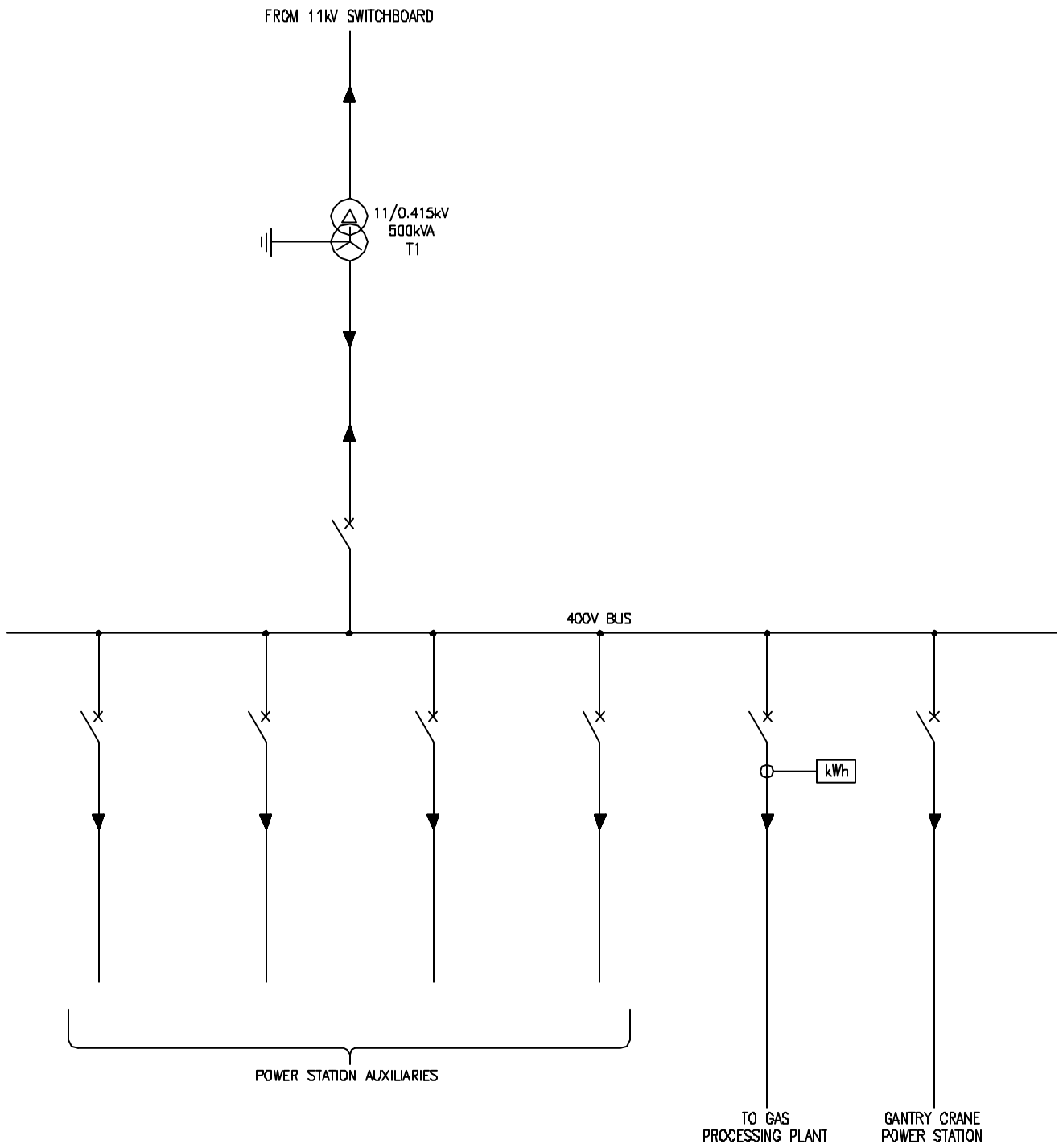

POWER PLANT 400V SWITCHBOARD No. 1

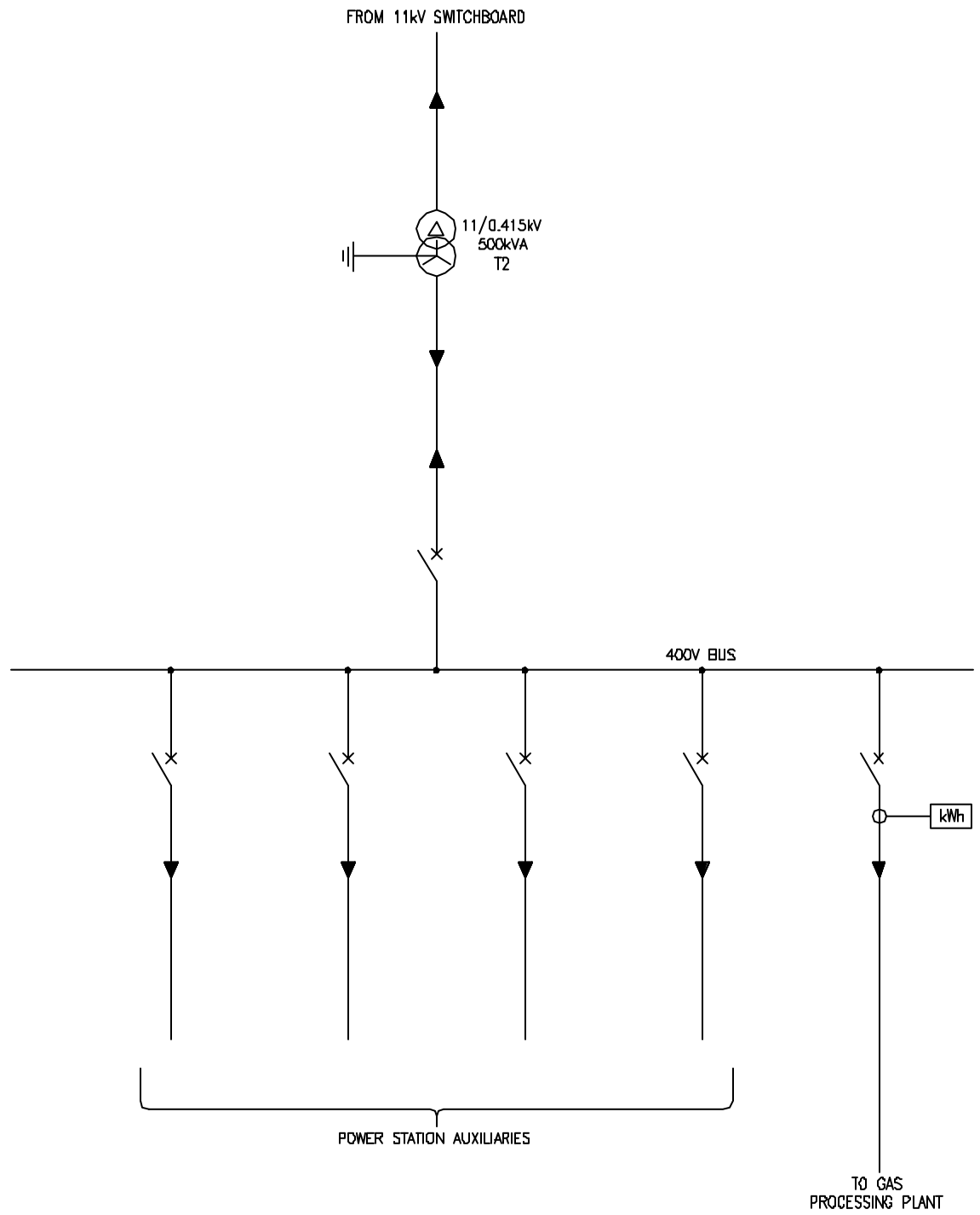

POWER PLANT 400V SWITCHBOARD No. 2

© Copyright Maunsell Limited, 2003.

This drawing is confidential and shall only be used for the purposes of this project.

No.	BY	DATE	DESCRIPTION	APPD
A	PM	MAY 15	ISSUED FOR FINAL REPORT	

Scales

N.T.S.

THE SIGNING OF THIS TITLE BLOCK CONFIRMS THE DESIGN AND DRAFTING OF THIS PROJECT HAVE BEEN PREPARED AND CHECKED IN ACCORDANCE WITH THE MAUNSELL QUALITY ASSURANCE SYSTEM CERTIFIED TO AS/NZS ISO 9001:2000

DESIGNED	RHW	CHECKED	
DRAWN	PM	CHECKED	
APPROVED		DATE	MAY 15

CAD File: H:\Maunsell_112864634_AF Sheberghan Feasibility\CAD\Working\112864634-1513.dwg
Last saved: Thu, 29 May 2003 04:18 pm

maunsell

Maunsell Limited
AN AECOM COMPANY

AEAI/USAID
AEAI Delivery Order No: 801-MAU-1

SHEBERGHAN POWER STATION FEASIBILITY STUDY

POWER PLANT
410V SINGLE LINE DIAGRAM

Status	Drg No.	Rev.
ISSUE	112864634-1513	A

APPENDIX O – Control System Block Diagram

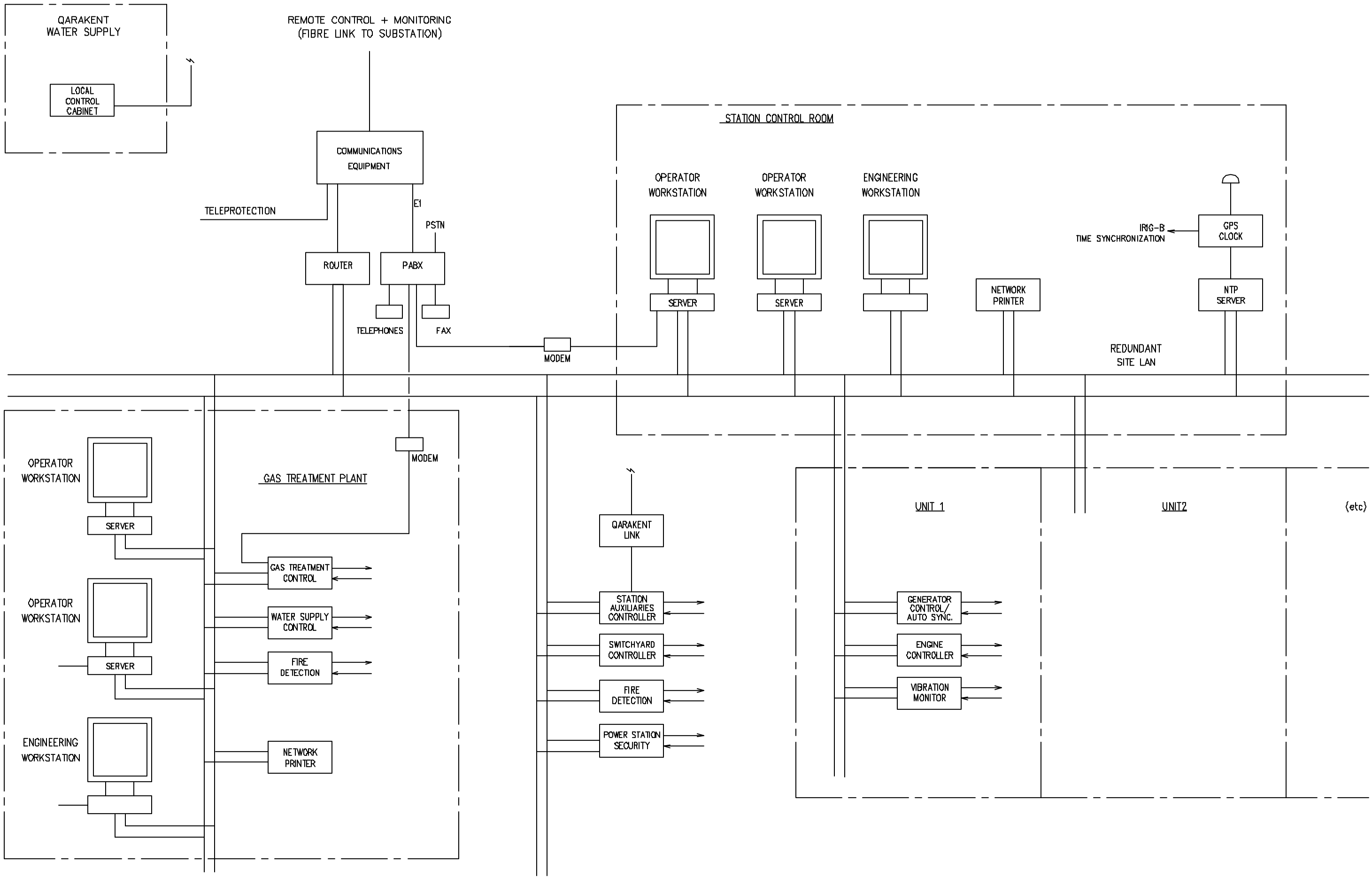

© Copyright Maunsell Limited, 2005

This drawing is confidential and shall only be used for the purposes of this project.

No.	BY	DATE	DESCRIPTION	APPD
C	ES	MAY 15	ISSUED FOR FINAL REPORT	
B	ES	MAY 15	GAS TREATMENT PLANT ADDED	WSC
A	FE	APR.15	ISSUED FOR REPORT	

Scales: N.T.S.

THE SIGNING OF THIS TITLE BLOCK CONFIRMS THE DESIGN AND DRAFTING OF THIS PROJECT HAVE BEEN PREPARED AND CHECKED IN ACCORDANCE WITH THE MAUNSELL QUALITY ASSURANCE SYSTEM CERTIFIED TO AS/NZS ISO 9001-2000

DESIGNED	CST	CHECKED	DJP
DRAWN	FA	CHECKED	
APPROVED	WSC	DATE	APR.15

CAD File: H:\Data_112864634_AF Sheberghan Feasibility\CAD\Working\112864634-1511.dwg
Last saved: Thu, 29 May 2008 04:17 pm

maunsell
Maunsell Limited
AN AECOM COMPANY

AEAI/USAID
AEAI Delivery Order No: 801-MAU-1

SHEBERGHAN POWER STATION FEASIBILITY STUDY

CONTROL SYSTEM BLOCK DIAGRAM

Status: ISSUE

Drg No: 112864634-1511

Rev: C

APPENDIX P – Single Line Coordinate Map of Gas & Water Pipeline

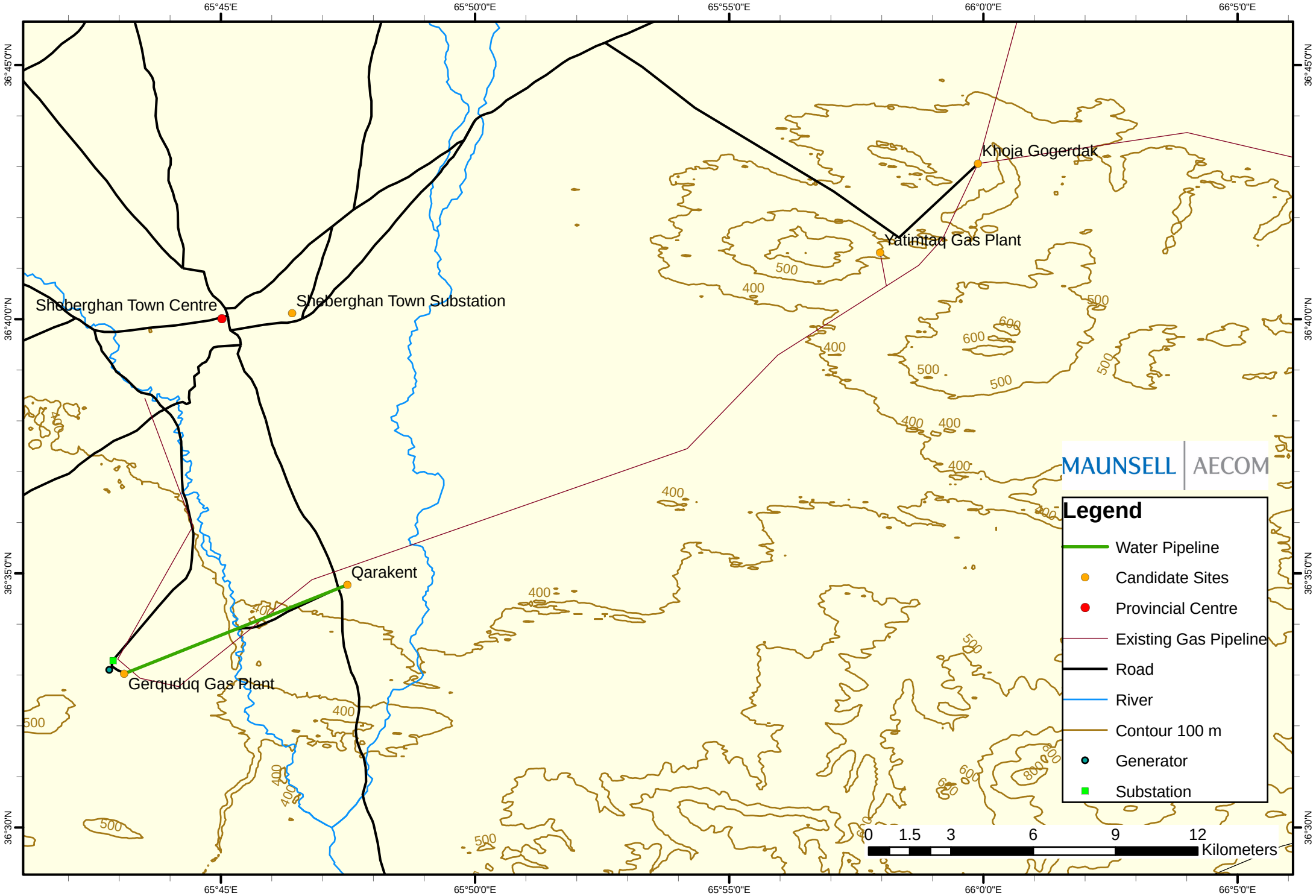
65°45'E
65°50'0"E
65°55'0"E
66°0'0"E
66°5'0"E
36°45'0"N
36°40'0"N
36°35'0"N
36°30'N
Khoja Gogerdak
Yatimtaq Gas Plant
Sheberghan Town Centre
Sheberghan Town Substation
Qarakent
Gerquduq Gas Plant
MAUNSELL
AECOM
Legend
Water Pipeline
Candidate Sites
Provincial Centre
Existing Gas Pipeline
Road
River
Contour 100 m
Generator
Substation
0 1.5 3 6 9 12
Kilometers

APPENDIX Q – Preliminary Project Schedule

Sheberghan 100MW Power Project Development Plan

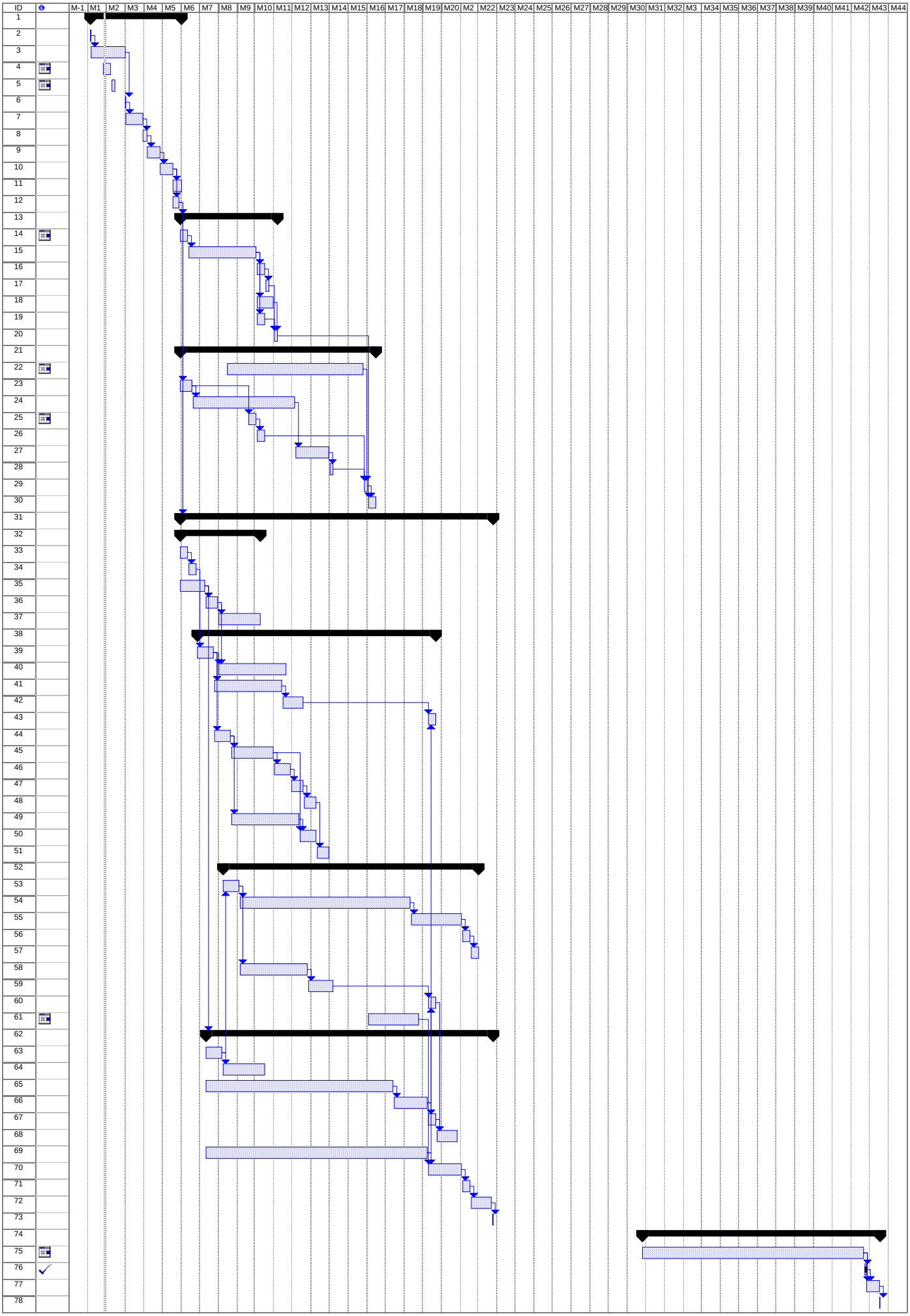

APPENDIX R –Equipment Manufacturers Information

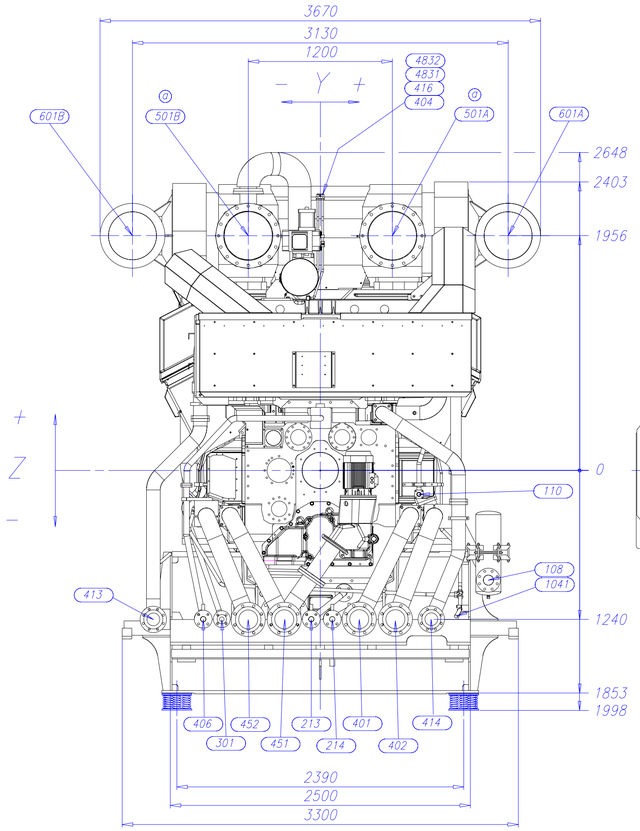

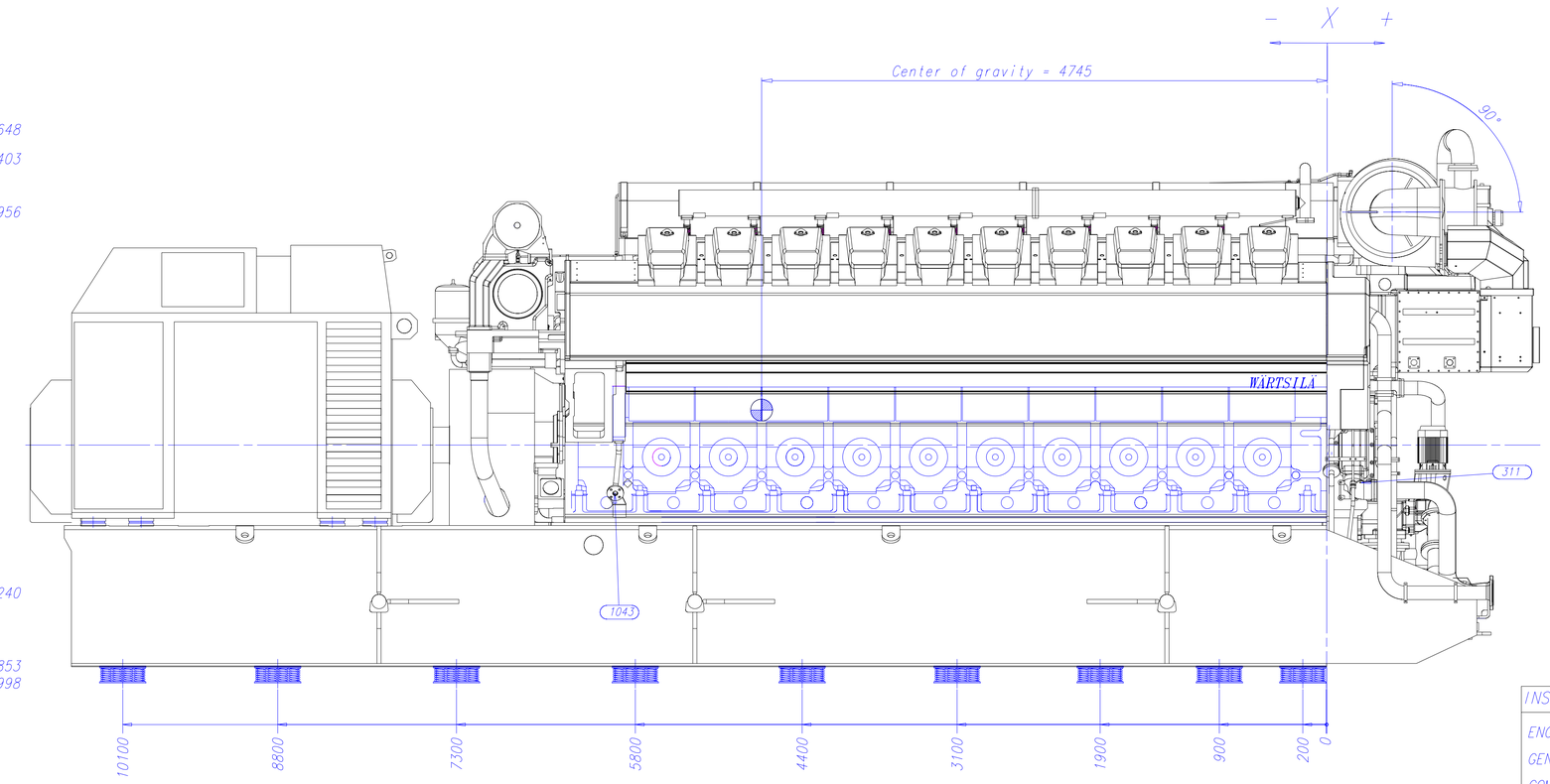

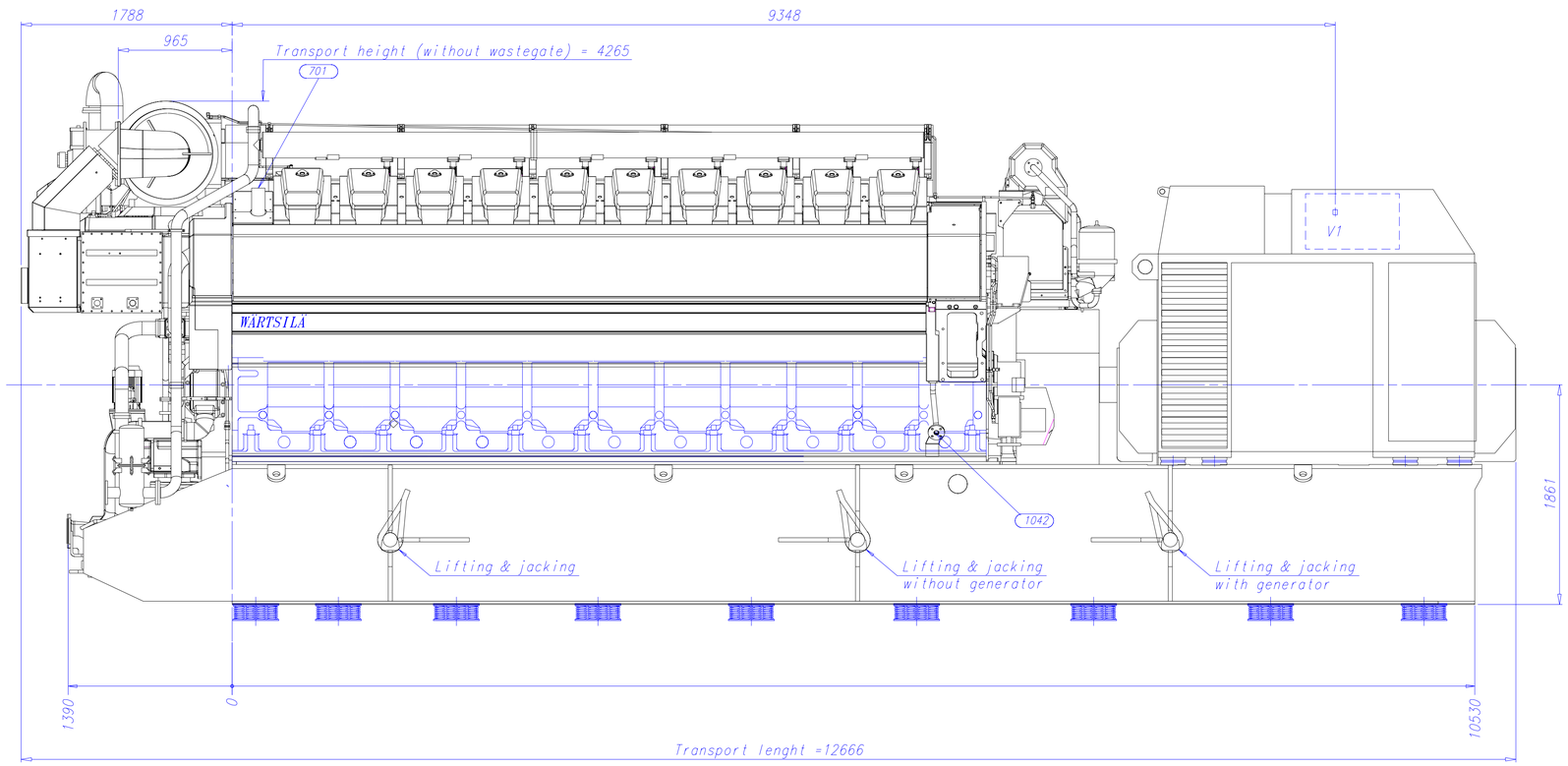

INSTALLATION WEIGHTS	
ENGINE	76400 kg
GENERATOR	33000 kg
COMMON BASE FRAME	19600 kg
FLYWHEEL AND COUPLING	2500 kg
WATER AND OIL	6000 kg
TOTAL WEIGHT	137500 kg
DRY WEIGHT	131500 kg

CODE	EXPLANATION OF PIPE CONNECTIONS	CONNECTION TYPE	SIZE	X	Y	Z
701	Kampikammion tuuletus CRANKCASE AIR VENT	PIPE DIN 2391	OD114	-222	+963	+1668
601B	Palamisilman tulo turboahtimeen AIR INLET TO TURBOCHARGER	FLANGE DIN 2501	DN400	+965	-1565	+1956
601A	Palamisilman tulo turboahtimeen AIR INLET TO TURBOCHARGER	FLANGE DIN 2501	DN400	+965	+1565	+1956
501B	Pakokaasun poisto EXHAUST GAS OUTLET	FLANGE DIN 2501	DN400	+1259	-600	+1956
501A	Pakokaasun poisto EXHAUST GAS OUTLET	FLANGE DIN 2501	DN400	+1259	+600	+1956
4832	LT-veden ilmanpoisto LT-WATER AIR VENT	FITTING DIN 2353	OD12	+190	+16	+2303
4831	LT-veden ilmanpoisto LT-WATER AIR VENT	FITTING DIN 2353	OD15	+440	+20	+2303
452	LT-vesi moottorista LT-WATER OUTLET	FLANGE DIN 2633	DN150	+1390	-600	-1240
451	LT-vesi moottoriin LT-WATER INLET	FLANGE DIN 2633	DN150	+1390	-300	-1240
416	HT-veden ilmanpoisto ilmanjäähdyttimestä HT-WATER AIR VENT FROM AIR COOLER	FITTING DIN 2353	OD15	+440	-20	+2303
414	HT-vesi ahtoilmanjäähdyttimestä HT-WATER OUTLET FROM COOLER	FLANGE DIN 2633	DN100	+1390	+925	-1240
413	HT-vesi ahtoilmanjäähdyttimeen HT-WATER INLET TO AIR COOLER	FLANGE DIN 2633	DN100	+1390	-1391	-1240
406	Vesi esilämmittimestä HT-piiriin WATER FROM PREHEATER TO HT-CIRCUIT	FLANGE DIN 2633	DN40	+1390	-975	-1240
404	HT-veden ilmanpoisto HT-WATER AIR VENT	FITTING DIN 2353	OD12	+190	-16	+2303
402	HT-vesi moottorista HT-WATER OUTLET	FLANGE DIN 2633	DN150	+1390	+625	-1240
401	HT-vesi moottoriin HT-WATER INLET	FLANGE DIN 2633	DN150	+1390	+325	-1240
311	Ohjausilma Wastegate venttiiliin CONTROL AIR TO WASTEGATE VALVE	FITTING DIN 2353	OD10	+282	-1046	-317
301	Käynnistysilma moottoriin STARTING AIR INLET	FLANGE DIN 2633	DN32	+1390	-820	-1240
216	Voiteluöljyn tyhjennys LUBE OIL DRAIN	PLUG	M22x1,5	0	0	-1447
214	Voiteluöljy separaattoriin ja tyhjennys LUBE OIL TO SEPARATOR AND DRAIN	FLANGE DIN 2633	DN40	+1390	+100	-1240
213	Voiteluöljy separaattorista ja täyttö LUBE OIL FROM SEPARATOR AND FILLING	FLANGE DIN 2633	DN40	+1390	-75	-1240
110	Pcc-kaasu moottoriin PCC GAS INLET	FLANGE -	OD35	+510	+822	-199
108	Kaasu moottoriin GAS INLET	FLANGE DIN 2576	DN80	+1074	+1400	-912
1043	Polttoaineen vuoto, likainen LEAK FUEL DRAIN, DIRTY FUEL	FLANGE DIN 2576	DN32	-5968	-848	-406
1042	Polttoaineen vuoto, likainen LEAK FUEL DRAIN, DIRTY FUEL	FLANGE DIN 2576	DN32	-5968	+848	-406
1041	Polttoaineen vuoto, likainen LEAK FUEL DRAIN, DIRTY FUEL	PIPE DIN 2391	OD28	+1280	+1130	-1217

REV.	DATE	MADE	APPVD.	MEMO NO.	EXPLANATION
a	26 09 2002	AORN	HPn	D41882	501A, 501B added

WÄRTSILÄ

© Wärtsilä Finland Oy Power Plants

EG-SET

ABB TPL65 WITH WASTEGATE

ABB AMG 1120 LS10

–

Product W20V34SG	© IDE	UNITS mm kg		
MADE	26 06 2002	AORN/RAJANEN	ASLY.DRG –	
CHKD	30 07 2002	HPn/PULKKINEN	SCALE 1:25	PAGE NO. –/–
APPD	30 07 2002	MIJI/JUOPPERI		DRG. NO. 1V58A2722 a Rev.

This drawing is the property of Wärtsilä Finland Oy and shall neither be copied, shown nor communicated to a third party without the consent of the owner.

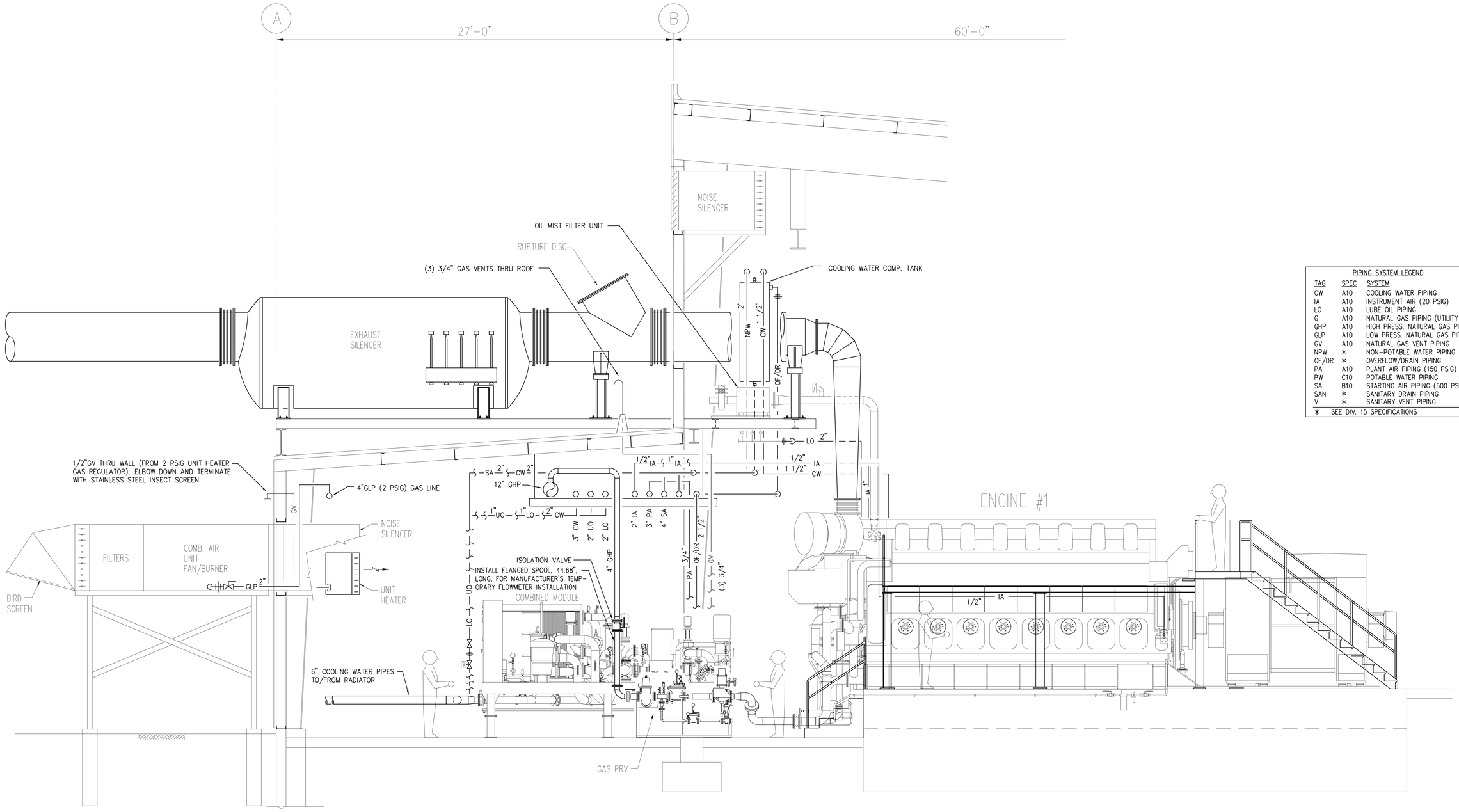

PIPING SYSTEM LEGEND

TAG	SPEC	SYSTEM
CW	A10	COOLING WATER PIPING
IA	A10	INSTRUMENT AIR (20 PSIG)
LO	A10	LUBE OIL PIPING
G	A10	NATURAL GAS PIPING (UTILITY CO.)
GHP	A10	HIGH PRESS. NATURAL GAS PIPING
GLP	A10	LOW PRESS. NATURAL GAS PIPING
GV	A10	NATURAL GAS VENT PIPING
NPW	*	NON-POTABLE WATER PIPING
OF/DR	*	OVERFLOW/DRAIN PIPING
PA	A10	PLANT AIR PIPING (150 PSIG)
PW	C10	POTABLE WATER PIPING
SA	B10	STARTING AIR PIPING (500 PSIG)
SAN	*	SANITARY DRAIN PIPING
V	*	SANITARY VENT PIPING

* SEE DIV. 15 SPECIFICATIONS

A / M108 PARTIAL MECHANICAL PIPING SECTION

SCALE: 3/8" = 1'-0"

12" 0 1' 5' 10'

-BIDDING COPY-
-NOT FOR CONSTRUCTION-

REVISIONS		
NO.	DATE	REMARKS
B	05/17/04	ISSUED FOR BIDS

DESIGNED	APPROVED
KBFD	JBS
DRAFTED	APPROVED
KEL	KBFD
CHECKED	APPROVED
KBFD	JBS

Industrial Technology Group
Henneman Raufelsen And Associates Inc
2803 Research Road, Champaign Illinois 61822
Telephone 217.398.6280 • Facsimile 217.398.6286
Email: info@henneman.com • Website: http://www.itg-hra.com

CATERPILLAR®

PARTIAL MECHANICAL PIPING SECTION

51.8MW ELECTRIC GENERATING PLANT
BASIN CREEK ENERGY LLC
BUTTE, MONTANA

ITG NO.: 03-3364
DATE: APRIL 15, 2004
SHEET NO.: M-108

COPYRIGHT © 2003 INDUSTRIAL TECHNOLOGY GROUP, All Rights Reserved

GCM34
Gas Engine Generator Set

CM Product

5900 kWe

750 rpm
50 Hz

Engine

- Engine type
  4-stroke-cycle gas engine
- Cylinder configuration
  Vee - 16
- Fuel Type
  Natural Gas
- Methane Number
  80 (minimum 70)
- Bore - 340 mm (13.4 in)
- Stroke - 420 mm (16.5 in)
- Cylinder displacement - 38.1 L (2328 cu in)
- Cylinder output - 381 kW (511 bhp)
- Mean piston speed - 10.5 m/s (34.5 ft/s)
- Mean effective pressure - 16.0 bar (232 psig)
- Aspiration
  Turbocharged and Aftercooled
- Compression ratio
  11.4:1
- Engine Efficiency (45.0%)
- Engine Rating - 6100 kW
- Generator Set Rating - 5900 kWe

Features

Designed for Efficiency & Reliability

- Spark ignition, lean burn combustion and pre-chamber design.
- Intensive cooling of key components including spark plugs, main/pre-chamber and exhaust valve seats.
- Proven Caterpillar electronic control system, precise fuel delivery and long stroke design result in world-class efficiency.
- Robust engine platform based on proven heavy fuel engine design.

Low Emissions

- Air-to-fuel ratio control, optimized pre-chamber design and Caterpillar electronic control result in low emissions.
- Configurations with NOx emissions to 500 or 250 mg/N•m^3 at 5% O_2 available.

Minimized Mechanical Wear

- Modular design and state of the art material ensure long life of components.

Overall Economy

- Cost savings include high availability, long life, low fuel and oil consumption and low maintenance requirements.

Highest Quality Engine Parts

- Semi-dry wear resistant liners with calibration inserts,
- Pistons with forged steel crown and aluminum skirt,
- Inlet/outlet valves with armored seats,
- High efficiency turbocharger.

One-Piece Dry Engine Block

- Cast from nodular cast iron with under slung crankshaft and free from cooling water.

Ease of Maintenance & Reliability

- Designed to provide efficient maintenance including easily removable cylinder heads, quick removable fluid connections and split connecting rods to allow piston removal without disturbing the big-end bearing.
- High reliability, modular design and integral construction reduce the number of components by 40 percent over conventional designs.

Total Power Solutions

- Caterpillar and the world-wide Caterpillar® dealer network can develop, finance, design, build, test, maintain and operate medium speed reciprocating engine power plants, plant assets and at the customer's option provide:
  - Power generation equipment
  - Engineered systems
  - Combined heat & power systems
  - Construction & installation services
  - Operation & maintenance services
  - Turnkey power plants
  - Contract power
  - Plant and equipment leasing

Worldwide Product Support

- With nearly 200 Caterpillar dealers and 1500 facilities worldwide serving in excess of 200 countries, you're never far from the Caterpillar support you need.
- Customer Support Agreements offer back-to-back services from scheduled inspections, preventive maintenance and overhauls to full operations & maintenance.

GCM34
Gas Engine Generator Set

CM Product

Nominal Performance

	Units	G16CM34
Engine Rating	kWm	6100
Generator Set Rating	kWe (kVA)	5900 (7375)
Speed	rpm	750
Frequency	Hz	50
Heat Rate	kJ/kWh (Btu/kWh)	8273 (7842)
Specific Lube Oil Consumption	g/kWh (lb/kWh)	0.3 (0.0007)

Rating Definitions and Conditions

Ratings are based on ISO3046/1 standard reference conditions and natural gas having a methane number of 70 or higher. Power output may require adjustment for values other than ISO3046/1 standard reference conditions.

Continuous - Output available for an unlimited time without varying load.

Generator efficiency - Efficiency of 96.7% based on 0.8 pf with medium voltage class generator; actual efficiency will depend on generator selection.

Fuel consumption is based on ISO3046/1 standard reference conditions of 25° C (77° F) and 100 kPa (29.61 in Hg), natural gas with methane number of 80, including engine driven pumps and with 0% tolerance. Value based on measurement at the generator terminals.

Lube oil consumption - tolerance on value of ±0.15 g/kWh (0.00035 lb/kWh). Lube oil consumption can only be demonstrated after 500 hours of operation.

Generator Set Dimensions

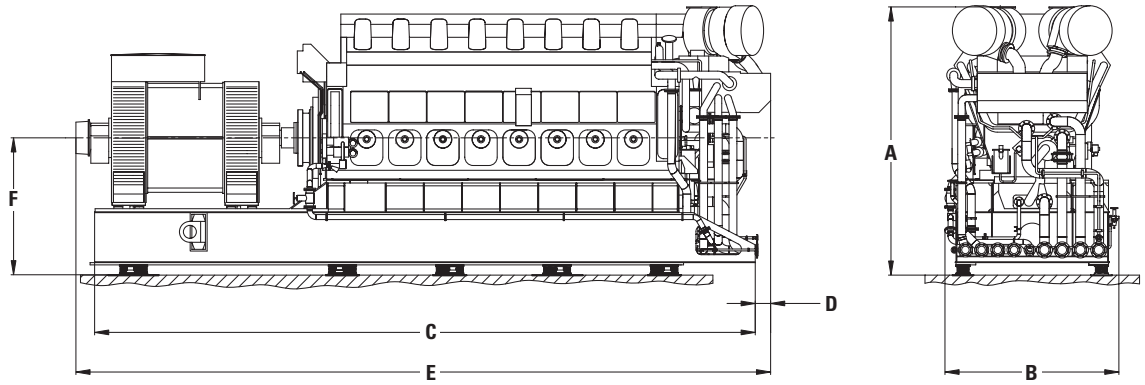

Engine Model	Generator Set Dimensions - mm (in)						Approximate Weight (dry) - kg (lb)		
	A	B	C	D	E	F	Generator Set	Engine	Generator
G16CM34	4750	3080	11 700	272	12 303	2425	132 700	81 000	23 800
	(187.0)	(121.3)	(460.6)	(10.7)	(484.4)	(95.5)	(292,553)	(178,574)	(52,470)

Generator set package shown with optional baseframe.

Solar Turbines Incorporated
P.O. Box 85376 MZ SP3-Q
San Diego, CA 92186-5376 U.S.A.

Caterpillar is a trademark of Caterpillar Inc.
Specifications subject to change without notice. Printed in U.S.A.
© 2003 Solar Turbines Incorporated. All rights reserved.

LEHE3964-01

FOR MORE INFORMATION

Telephone: (+1) 619-544-5352
Telefax: (+1) 858-694-6715
E-mail: powergen@solarturbines.com
Internet: www.solarturbines.com

Performance data - Wärtsilä gas engines at 50 Hz

Engine			12V34SG		W16V34SG		18V34SG		W20V34SG		18V32DF		18V50DF	
											Gas mode	LFO mode	Gas mode	LFO mode
Frequency		Hz	50	50	50	50	50	50	50	50	50	50	50	50
Engine optimisation: NOx (dry @ 5 vol-% O2)		mg/Nm3	250	500	250	500	250	500	250	500	500		500	
HT out		℃	91 - 95	91 - 95	91 - 95	91 - 95	91 - 95	91 - 95	91 - 95	91 - 95	91 - 95	91 - 95	91 - 95	91 - 95
HT temp difference	min.	℃	8	7	13	12	8	7	14	13	8	10	15	21
LT out		℃	38 - 40	38 - 40	43 - 45	43 - 45	38 - 40	38 - 40	41 - 43	41 - 43	38 - 40	38 - 40	45 - 47	48 - 50
LT temp difference	min.	℃	5	5	9	9	5	5	10	10	5	5	13	16
LO out		℃	73	73	73	73	74	74	70	70	74	74	74	77
LO temp difference	min.	℃	11	11	10	10	12	12	11	11	12	13	12	15
CA flow	± 5%	kg/s	6,9	6,5	12,3	11,5	10,4	9,8	15,3	14,3	9,9	11,7	26,5	32,6
EG flow	± 5%	kg/s	7,1	6,7	12,6	11,8	10,7	10,1	15,7	14,7	10,1	12,0	27,3	33,5
EG temp.	± 10℃	℃	380	400	375	390	380	400	375	390	398	357	401	364
Fuel cons. *		Nm3/h	968	940	1660	1609	1451	1408	2074	2009	1447		3748	
		kg/h										1225		3341
		kW	9476	9200	16260	15760	14214	13800	20334	19700	14317	14527	36921	39634
Electric		kW	3995	3995	6970	6970	5993	5993	8730	8730	6080	6080	16638	16638
Exhaust gas energy	± 10%	kW	3105	2939	5315	5027	4620	4375	6637	6262	4654	4172	11848	12302
HT-energy	± 10%	kW	1220	1136	2119	1955	1880	1745	2695	2486	1841	2411	4316	5752
LT-energy	± 10%	kW	864	838	1426	1388	1284	1250	1762	1712	1291	1413	3027	3810
Heat losses by radiation	± 15%	kW	292	292	430	420	437	437	510	510	451	451	1092	1132
Efficiency		100% load	42,2%	43,4%	42,9%	44,2%	42,2%	43,4%	42,9%	44,3%	42,5%	41,8%	45,1%	42,0%
		75% load	40,8%	41,8%	41,3%	42,7%	40,8%	41,8%	41,4%	42,8%	40,4%	40,9%	43,3%	41,1%
		50% load	38,0%	38,6%	38,0%	39,4%	38,0%	38,6%	38,1%	39,5%	37,3%	39,4%	40,3%	39,4%

Note:
Heat and mass balances are dependent of ambient conditions and plant application, above given figures are for guidance only and calculated at reference conditions; 25℃ ambient temperature, 100 m above sea level and 30% relative humidity.
Nm3 defined at NTP (273.15 K and 101.3kPa)

* 0% tolerance fuel consumption with Natural gas (LHV 35282 kJ/Nm3 at 0℃) or LFO (LHV 42700 kJ/kg) at 100% load and ISO 3046 reference conditions, engine optimised for 970 ppm (dry, 15 vol-% O2) NOx level.

Abbreviations:
CA= Charge Air
EG= Exhaust gas
LO= Lubrication oil
LT= Low temperature circuit
HT= High temperature circuit

APPENDIX S – Cost Estimates

Sheberghan 30MWe Reciprocating Gas Engine Power Station Phase I
Capital Cost Estimate if only part built

Ref	Item	Specification	Cost	% of C.V.	$/kW
		Installation	(US$ '000s)		
1.0	**Gas Processing**				
1.1	**Civil**				
1.1.1	Site Preparation and remediation		200	0.3%	2.00
1.1.2	Site Development		150	0.2%	1.50
1.1.3	Site Utilities and drainage		200	0.3%	2.00
1.1.4	Excavation		100	0.1%	1.00
1.1.5	Concrete		300	0.4%	3.00
1.1.6	Steel		400	0.6%	4.00
1.1.7	Buildings		200	0.3%	2.00
1.1.8	Building Cladding		50	0.1%	0.50
1.1.9	Miscellaneous Civil		50	0.1%	0.50
1.1.10	HVAC		20	0.0%	0.20
1.1.11	Fire Protection		400	0.6%	4.00
1.2	**Mechanical & Process**				
1.2.1	Knock-out vessel		80	0.1%	0.80
1.2.2	Amine System		3,300	4.6%	33.00
1.2.3	Glycol System		1,650	2.3%	16.50
1.2.4	Tail gas flare		368	0.5%	3.68
1.2.5	Delivery		1,000	1.4%	10.00
1.2.6	Installation		4,000	5.6%	40.00
1.3	**Pipelines**				
1.3.1	Pipeline: gas manifold to gas processing		100	0.1%	1.00
1.3.2	Pipeline: gas processing to power station		75	0.1%	0.75
1.3.3	Pipeline: gas processing to gas manifold		100	0.1%	1.00
1.3.4	Metering: gas processing to power station		100	0.1%	1.00
1.3.5	Refurbish pressure protection and flare/vent system		300	0.4%	3.00
1.4	**Electrical**				
1.4.1	Switchgear, metering control & protection	11/110 kV	50	0.1%	0.50
1.4.2	MCC	inc 2.3.1	-	0.0%	-
1.4.3	Panel Boards		20	0.0%	0.20
1.4.4	UPS System		35	0.0%	0.35
1.4.5	Cable Tray & Fittings	inc with cable		0.0%	-
1.4.6	Earthing System		30	0.0%	0.30
1.4.7	Lightning Protection		20	0.0%	0.20
1.4.8	Cabling		45	0.1%	0.45
1.4.9	Indoor & Outdoor Lighting		120	0.2%	1.20
1.4.10	Installation		105	0.1%	1.05
1.4.11	Construction Power	inc 2.3.14		0.0%	-
1.5	**Control**				
1.5.1	DCS including Operator Workstation		70	0.1%	0.70
1.5.2	Instrumentation		40	0.1%	0.40
1.5.3	Indicators		5	0.0%	0.05
1.5.4	Instrumentation Racks & Enclosures		5	0.0%	0.05
1.5.5	Tubing		5	0.0%	0.05
1.5.6	Cabling		8	0.0%	0.08
1.5.7	Gas Chromatograph		40	0.1%	0.40
1.5.8	Fire Detection and Alarm		7	0.0%	0.07
1.5.9	Local Communications		5	0.0%	0.05
1.5.10	Installation		100	0.1%	1.00
1.6	**Operation and Maintenance**				
1.6.1	Spares	0.5%	69	0.1%	0.69
1.6.2	Chemicals & Lubricants - Initial Fill		250	0.4%	2.50
1.6.3	Chemicals & Lubricants - Store		250	0.4%	2.50
1.6.4	Consumables incl Nitrogen	1.0%	138	0.2%	1.38
1.6.5	Technology transfer and training		200	0.3%	2.00
1.7	**Tools and Equipment**				
1.7.1	Chemical laboratory equipment		70	0.1%	0.70
1.7.2	Special Tools (gas conditioning)		50	0.1%	0.50
1.8	**Indirect Costs**				
1.8.1	Engineering	25%	3,463	4.9%	34.63
1.8.2	Project Management	below			
1.8.3	Tender Finalisation, Review & Letting		0	0.0%	0.00
1.8.4	Site Supervision		2	0.0%	0.02
1.8.5	Commissioning, start-up and testing		0	0.0%	0.00
1.8.6	Owners Costs	2.0%	298	0.4%	2.98
1.8.7	Insurance	2.0%	298	0.4%	2.98
1.8.8	Construction interest (1/2 CC for 18 months)	15%	2,209	3.1%	22.09
1.8.9	Contingency	20%	4,230	5.9%	42.30
Subtotal - Gas Conditioning Plant			**25,379**		

Sheberghan 30MWe Reciprocating Gas Engine Power Station Phase I
Capital Cost Estimate if only part built

Ref	Item	Specification	Cost	% of C.V.	$/kW
		Installation	(US$ '000s)		
2.0	**Power Station**				
2.1	**Civil**				
2.1.1	Site Preparation		240	0.3%	2.40
2.1.2	Site Development		480	0.7%	4.80
2.1.3	Site Utilities		160	0.2%	1.60
2.1.4	Excavation		150	0.2%	1.50
2.1.5	Concrete		900	1.3%	9.00
2.1.6	Steel		750	1.1%	7.50
2.1.7	Cranes		200	0.3%	2.00
2.1.8	Buildings		1,200	1.7%	12.00
2.1.9	Building Cladding		175	0.2%	1.75
2.1.10	Miscellaneous Civil		200	0.3%	2.00
2.1.11	HVAC		150	0.2%	1.50
2.1.12	Fire Protection		175	0.2%	1.75
2.1.13	Construction Water		20	0.0%	0.20
2.1.14	Fencing		150	0.2%	1.50
2.1.15	Soakage Ponds		30	0.0%	0.30
2.1.16	Guesthouse		100	0.1%	1.00
2.2	**Mechanical & Process**				
2.2.1	Genset CIF	100MW	16,925	23.8%	169.25
2.2.2	Charge Air System	inc. 2.2.1	-	0.0%	-
2.2.3	Fuel Gas System	inc. 2.2.1	-	0.0%	-
2.2.4	Exhaust System	inc. 2.2.1	-	0.0%	-
2.2.5	Cooling Water System	inc. 2.2.1	-	0.0%	-
2.2.6	Lube Oil System	inc. 2.2.1	-	0.0%	-
2.2.7	Compressed Air System	inc. 2.2.1	-	0.0%	-
2.2.8	Exhaust Gas Heat Recovery System	inc. 2.2.1	-	0.0%	-
2.2.9	Water Conditioning (RO Filtration & Softening)		70	0.1%	0.70
2.2.10	Water Storage Tank	50m3	10	0.0%	0.10
2.2.11	Boiler - Cold Start	200 kW	100	0.1%	1.00
2.2.12	Lube Oil Storage Tanks (New & Used)	50m3	20	0.0%	0.20
2.2.13	Valves (misc)		100	0.1%	1.00
2.2.14	Pipework & supporting elements (misc)		100	0.1%	1.00
2.2.15	Platforms		50	0.1%	0.50
2.2.16	Delivery		2,000	2.8%	20.00
2.2.17	Installation	inc. 2.2.1	-	0.0%	-
2.3	**Electrical**				
2.3.1	MCC	400v - 12ccts	80	0.1%	0.80
2.3.2	NER	inc with generator	-	0.0%	-
2.3.3	Panel Boards	protection (15)	15	0.0%	0.15
2.3.4	UPS System		35	0.0%	0.35
2.3.5	110v DC system		60	0.1%	0.60
2.3.6	Bus Duct		720	1.0%	7.20
2.3.7	Cable Tray & Fittings	inc 3.2.15	-	0.0%	-
2.3.8	Black Start Generator	300kW	150	0.2%	1.50
2.3.9	Earthing System		100	0.1%	1.00
2.3.10	Lightning Protection		40	0.1%	0.40
2.3.11	Cabling		100	0.1%	1.00
2.3.12	Indoor & Outdoor Lighting		115	0.2%	1.15
2.3.13	Installation		375	0.5%	3.75
2.3.14	Construction Power		25	0.0%	0.25
2.4	**Control**				
2.4.1	System Engineering		30	0.0%	0.30
2.4.2	IT/LAN equipment		45	0.1%	0.45
2.4.3	Remote Communication System		150	0.2%	1.50
2.4.4	DCS including Operator Workstation		140	0.2%	1.40
2.4.5	Engineering workstation		9	0.0%	0.09
2.4.6	Instrumentation - BOP		25	0.0%	0.25
2.4.7	Indicators		5	0.0%	0.05
2.4.8	Instrumentation Racks & Enclosures		5	0.0%	0.05
2.4.9	Tubing		5	0.0%	0.05
2.4.10	Substation RTU		15	0.0%	0.15
2.4.11	Other controllers/monitors		25	0.0%	0.25
2.4.12	Cabling		10	0.0%	0.10
2.4.13	Fire Detection and Alarm		12	0.0%	0.12
2.4.14	Local Communications		10	0.0%	0.10
2.4.15	Installation		100	0.1%	1.00
2.5	**Operation and Maintenance**				
2.5.1	Spares	0.5%	134	0.2%	1.34
2.5.2	Chemicals & Lubricants - Initial Fill		125	0.2%	1.25
2.5.3	Chemicals & Lubricants - Store		125	0.2%	1.25
2.5.4	Consumables	0.5%	134	0.2%	1.34
2.5.5	Technology transfer and training		200	0.3%	2.00
2.6	**Tools and Equipment**				
2.6.1	Vehicles		250	0.4%	2.50
2.6.2	Workshop machines		125	0.2%	1.25
2.6.3	Portable Powered Hand tools		13	0.0%	0.13
2.6.4	Welding Equipment		25	0.0%	0.25
2.6.5	Lifting Equipment		50	0.1%	0.50
2.6.6	General Handling Equipment		6	0.0%	0.06
2.6.7	Portable Equipment		19	0.0%	0.19
2.6.8	Engine Test and Monitoring equipment		38	0.1%	0.38
2.6.9	Electrical and instrument Test equipment		75	0.1%	0.75
2.6.10	Computer Support equipment		38	0.1%	0.38
2.6.11	Personal protection equipment		63	0.1%	0.63
2.6.12	Special Tools (power plant)		50	0.1%	0.50
2.6.13	Noise Curtains		150	0.2%	1.50
2.7	**Indirect Costs**				
2.7.1	Engineering	15%	4,028	5.7%	40.28
2.7.2	Project Management	below			
2.7.3	Tender Finalisation, Review & Letting		0	0.0%	0.00
2.7.4	Site Supervision		3	0.0%	0.03
2.7.5	Commissioning, start-up and testing		0	0.0%	0.00
2.7.6	Owners Costs	2.0%	537	0.8%	5.37
2.7.7	Insurance	2.0%	537	0.8%	5.37
2.7.8	Construction interest (1/2 CC for 18 months)	15%	3,916	5.5%	39.16
2.7.9	Contingency	20%	5,371	7.5%	53.71

Sheberghan 30MWe Reciprocating Gas Engine Power Station Phase I

Capital Cost Estimate if only part built

Ref	Item	Specification	Cost	% of C.V.	$/kW
		Installation	(US$ '000s)		
Subtotal - Power Plant			**42,868**		

Sheberghan 30MWe Reciprocating Gas Engine Power Station Phase I
Capital Cost Estimate if only part built

Ref	Item	Specification	Cost	% of C.V.	$/kW
		Installation	(US$ '000s)		
3.0	**HV Electrical Interconnection**				
3.1.1	Switchgear, metering control & protection	11/110 kV	800	1.1%	8.00
3.1.2	Metalclad switchgear	11 kV	525	0.7%	5.25
3.1.3	Main Step-up Transformers	2 x 42/68 MVA	1,000	1.4%	10.00
3.1.4	Station Transformer	2 x 500 kVA	160	0.2%	1.60
3.1.5	Transmission to Substation	2km,2cct,110 kV	180	0.3%	1.80
Subtotal - HV Electrical Interconnection			**2,665**		
4.0	**Civil**				
4.1	**Transport Infrastructure Upgrade**				
4.1.1	Roads & Bridge Upgrades		250	0.4%	2.50
4.2	**Qarakent Water Supply Upgrade**			0.0%	-
4.2.1	Pumps		0	0.0%	0.00
4.2.2	Control		0	0.0%	0.00
4.2.3	Filtration		0	0.0%	0.00
4.2.4	Pipeline		1	0.0%	0.01
Subtotal - Civil			**251**		
Grand Total			**$71,164**		**$712**

Sheberghan 100MW Reciprocating Gas Engine Power Station
Capital Cost Estimate

Ref	Item	Specification	Cost	% of C.V.	$/kW
		Installation	(US$ '000s)		
1.0	**Gas Processing**				
1.1	**Civil**				
1.1.1	Site Preparation and remediation		200	0.1%	2.00
1.1.2	Site Development		150	0.1%	1.50
1.1.3	Site Utilities and drainage		200	0.1%	2.00
1.1.4	Excavation		100	0.1%	1.00
1.1.5	Concrete		300	0.2%	3.00
1.1.6	Steel		400	0.3%	4.00
1.1.7	Buildings		200	0.1%	2.00
1.1.8	Building Cladding		50	0.0%	0.50
1.1.9	Miscellaneous Civil		50	0.0%	0.50
1.1.10	HVAC		20	0.0%	0.20
1.1.11	Fire Protection		400	0.3%	4.00
1.2	**Mechanical & Process**				
1.2.1	Knock-out vessel		80	0.1%	0.80
1.2.2	Amine System		3,300	2.4%	33.00
1.2.3	Glycol System		1,650	1.2%	16.50
1.2.4	Tail gas flare		368	0.3%	3.68
1.2.5	Delivery		1,000	0.7%	10.00
1.2.6	Installation		4,000	2.9%	40.00
1.3	**Pipelines**				
1.3.1	Pipeline: gas manifold to gas processing		100	0.1%	1.00
1.3.2	Pipeline: gas processing to power station		75	0.1%	0.75
1.3.3	Pipeline: gas processing to gas manifold		100	0.1%	1.00
1.3.4	Metering: gas processing to power station		100	0.1%	1.00
1.3.5	Refurbish pressure protection and flare/vent system		300	0.2%	3.00
1.4	**Electrical**				
1.4.1	Switchgear, metering control & protection	11/110 kV	50	0.0%	0.50
1.4.2	MCC	inc 2.3.1	-	0.0%	-
1.4.3	Panel Boards		20	0.0%	0.20
1.4.4	UPS System		35	0.0%	0.35
1.4.5	Cable Tray & Fittings	inc with cable		0.0%	-
1.4.6	Earthing System		30	0.0%	0.30
1.4.7	Lightning Protection		20	0.0%	0.20
1.4.8	Cabling		45	0.0%	0.45
1.4.9	Indoor & Outdoor Lighting		120	0.1%	1.20
1.4.10	Installation		105	0.1%	1.05
1.4.11	Construction Power	inc 2.3.14		0.0%	-
1.5	**Control**				
1.5.1	DCS including Operator Workstation		70	0.1%	0.70
1.5.2	Instrumentation		40	0.0%	0.40
1.5.3	Indicators		5	0.0%	0.05
1.5.4	Instrumentation Racks & Enclosures		5	0.0%	0.05
1.5.5	Tubing		5	0.0%	0.05
1.5.6	Cabling		8	0.0%	0.08
1.5.7	Gas Chromatograph		40	0.0%	0.40
1.5.8	Fire Detection and Alarm		7	0.0%	0.07
1.5.9	Local Communications		5	0.0%	0.05
1.5.10	Installation		100	0.1%	1.00
1.6	**Operation and Maintenance**				
1.6.1	Spares	0.5%	69	0.1%	0.69
1.6.2	Chemicals & Lubricants - Initial Fill		250	0.2%	2.50
1.6.3	Chemicals & Lubricants - Store		250	0.2%	2.50
1.6.4	Consumables incl Nitrogen	1.0%	138	0.1%	1.38
1.6.5	Technology transfer and training		200	0.1%	2.00
1.7	**Tools and Equipment**				
1.7.1	Chemical laboratory equipment		70	0.1%	0.70
1.7.2	Special Tools (gas conditioning)		50	0.0%	0.50
1.8	**Indirect Costs**				
1.8.1	Engineering	25%	3,463	2.5%	34.63
1.8.2	Project Management	below			
1.8.3	Tender Finalisation, Review & Letting		0	0.0%	0.00
1.8.4	Site Supervision		2	0.0%	0.02
1.8.5	Commissioning, start-up and testing		0	0.0%	0.00
1.8.6	Owners Costs	2.0%	298	0.2%	2.98
1.8.7	Insurance	2.0%	298	0.2%	2.98
1.8.8	Construction interest (1/2 CC for 18 months)	15%	2,209	1.6%	22.09
1.8.9	Contingency	20%	4,230	3.1%	42.30
Subtotal - Gas Conditioning Plant			**25,379**		

Sheberghan 100MW Reciprocating Gas Engine Power Station
Capital Cost Estimate

Ref	Item	Specification	Cost	% of C.V.	$/kW
		Installation	(US$ '000s)		
2.0	**Power Station**				
2.1	**Civil**				
2.1.1	Site Preparation		240	0.2%	2.40
2.1.2	Site Development		480	0.3%	4.80
2.1.3	Site Utilities		160	0.1%	1.60
2.1.4	Excavation		150	0.1%	1.50
2.1.5	Concrete		1,800	1.3%	18.00
2.1.6	Steel		1,500	1.1%	15.00
2.1.7	Cranes		400	0.3%	4.00
2.1.8	Buildings		2,400	1.7%	24.00
2.1.9	Building Cladding		350	0.3%	3.50
2.1.10	Miscellaneous Civil		400	0.3%	4.00
2.1.11	HVAC		150	0.1%	1.50
2.1.12	Fire Protection		175	0.1%	1.75
2.1.13	Construction Water		20	0.0%	0.20
2.1.14	Fencing		150	0.1%	1.50
2.1.15	Blow-down Ponds		30	0.0%	0.30
2.1.16	Guesthouse		100	0.1%	1.00
2.2	**Mechanical & Process**				
2.2.1	Genset CIF	100MW	54,160	39.1%	541.60
2.2.2	Charge Air System	inc. 2.2.1	-	0.0%	-
2.2.3	Fuel Gas System	inc. 2.2.1	-	0.0%	-
2.2.4	Exhaust System	inc. 2.2.1	-	0.0%	-
2.2.5	Cooling Water System	inc. 2.2.1	-	0.0%	-
2.2.6	Lube Oil System	inc. 2.2.1	-	0.0%	-
2.2.7	Compressed Air System	inc. 2.2.1	-	0.0%	-
2.2.8	Exhaust Gas Heat Recovery System	inc. 2.2.1	-	0.0%	-
2.2.9	Water Conditioning (RO Filtration & Softening)		70	0.1%	0.70
2.2.10	Water Storage Tank	50m3	10	0.0%	0.10
2.2.11	Boiler - Cold Start	200 kW	100	0.1%	1.00
2.2.12	Lube Oil Storage Tanks (New & Used)	50m3	20	0.0%	0.20
2.2.13	Valves (misc)		100	0.1%	1.00
2.2.14	Pipework & supporting elements (misc)		100	0.1%	1.00
2.2.15	Platforms		50	0.0%	0.50
2.2.16	Delivery		4,000	2.9%	40.00
2.2.17	Installation	inc. 2.2.1	-	0.0%	-
2.3	**Electrical**				
2.3.1	MCC	400v - 12ccts	250	0.2%	2.50
2.3.2	NER	inc with generator	-	0.0%	-
2.3.3	Panel Boards	protection (15)	15	0.0%	0.15
2.3.4	UPS System		35	0.0%	0.35
2.3.5	110v DC system		60	0.0%	0.60
2.3.6	Bus Duct		720	0.5%	7.20
2.3.7	Cable Tray & Fittings	inc 3.2.15	-	0.0%	-
2.3.8	Black Start Generator	300kW	150	0.1%	1.50
2.3.9	Earthing System		100	0.1%	1.00
2.3.10	Lightning Protection		40	0.0%	0.40
2.3.11	Cabling		215	0.2%	2.15
2.3.12	Indoor & Outdoor Lighting		115	0.1%	1.15
2.3.13	Installation		750	0.5%	7.50
2.3.14	Construction Power		50	0.0%	0.50
2.4	**Control**				
2.4.1	System Engineering		30	0.0%	0.30
2.4.2	IT/LAN equipment		45	0.0%	0.45
2.4.3	Remote Communication System		150	0.1%	1.50
2.4.4	DCS including Operator Workstation		140	0.1%	1.40
2.4.5	Engineering workstation		9	0.0%	0.09
2.4.6	Instrumentation - BOP		25	0.0%	0.25
2.4.7	Indicators		5	0.0%	0.05
2.4.8	Instrumentation Racks & Enclosures		5	0.0%	0.05
2.4.9	Tubing		5	0.0%	0.05
2.4.10	Substation RTU		15	0.0%	0.15
2.4.11	Other controllers/monitors		25	0.0%	0.25
2.4.12	Cabling		10	0.0%	0.10
2.4.13	Fire Detection and Alarm		12	0.0%	0.12
2.4.14	Local Communications		10	0.0%	0.10
2.4.15	Installation		200	0.1%	2.00
2.5	**Operation and Maintenance**				
2.5.1	Spares	0.5%	352	0.3%	3.52
2.5.2	Chemicals & Lubricants - Initial Fill		250	0.2%	2.50
2.5.3	Chemicals & Lubricants - Store		250	0.2%	2.50
2.5.4	Consumables	0.5%	352	0.3%	3.52
2.5.5	Technology transfer and training		200	0.1%	2.00
2.6	**Tools and Equipment**				
2.6.1	Vehicles		250	0.2%	2.50
2.6.2	Workshop machines		125	0.1%	1.25
2.6.3	Portable Powered Hand tools		13	0.0%	0.13
2.6.4	Welding Equipment		25	0.0%	0.25
2.6.5	Lifting Equipment		50	0.0%	0.50
2.6.6	General Handling Equipment		6	0.0%	0.06
2.6.7	Portable Equipment		19	0.0%	0.19
2.6.8	Engine Test and Monitoring equipment		38	0.0%	0.38
2.6.9	Electrical and instrument Test equipment		75	0.1%	0.75
2.6.10	Computer Support equipment		38	0.0%	0.38
2.6.11	Personal protection equipment		63	0.0%	0.63
2.6.12	Special Tools (power plant)		50	0.0%	0.50
2.6.13	Noise Curtains		300	0.2%	3.00
2.7	**Indirect Costs**				
2.7.1	Engineering	15%	10,545	7.6%	105.45
2.7.2	Project Management	below			
2.7.3	Tender Finalisation, Review & Letting		0	0.0%	0.00
2.7.4	Site Supervision		3	0.0%	0.03
2.7.5	Commissioning, start-up and testing		0	0.0%	0.00
2.7.6	Owners Costs	2.0%	1,406	1.0%	14.06
2.7.7	Insurance	2.0%	1,406	1.0%	14.06
2.7.8	Construction interest (1/2 CC for 18 months)	15%	10,043	7.3%	100.43
2.7.9	Contingency	20%	14,060	10.2%	140.60

Sheberghan 100MW Reciprocating Gas Engine Power Station
Capital Cost Estimate

Ref	Item	Specification	Cost	% of C.V.	$/kW
		Installation	(US$ '000s)		
Subtotal - Power Plant			**110,217**		

Sheberghan 100MW Reciprocating Gas Engine Power Station
Capital Cost Estimate

Ref	Item	Specification	Cost	% of C.V.	$/kW
		Installation	(US$ '000s)		
3.0	**HV Electrical Interconnection**				
3.1.1	Switchgear, metering control & protection	11/110 kV	800	0.6%	8.00
3.1.2	Metalclad switchgear	11 kV	525	0.4%	5.25
3.1.3	Main Step-up Transformers	2 x 42/68 MVA	1,000	0.7%	10.00
3.1.4	Station Transformer	2 x 500 kVA	160	0.1%	1.60
3.1.5	Transmission to Substation	2km,2cct,110 kV	180	0.1%	1.80
Subtotal - HV Electrical Interconnection			**2,665**		
4.0	**Civil**				
4.1	**Transport Infrastructure Upgrade**				
4.1.1	Roads & Bridge Upgrades		250	0.2%	2.50
4.2	**Qarakent Water Supply Upgrade**			0.0%	-
4.2.1	Pumps		0	0.0%	0.00
4.2.2	Control		0	0.0%	0.00
4.2.3	Filtration		0	0.0%	0.00
4.2.4	Pipeline		1	0.0%	0.01
Subtotal - Civil			**251**		
Grand Total			**$138,513**		**$1,385**

Sheberghan 100MW Reciprocating Gas Engine Power Station
Cost Estimate - Pumping Station

Ref	Item	Specification	Equipment (US$ '000s)	Commodities (US$ '000s)	Labour (US$ '000s)	Other (US$ '000s)	Total (US$ '000s)	
	Pumping Station							
	Borehole Pumps	60m x 0.5 l/s	4.0	-	3.0	0.0	7.0	Mono Pumps
	Pipework		2.0	-	4.0	0.0	6.0	Estimate
	Reservoir Pumps	60m x 0.5 l/s	6.0	-	10.0	0.0	16.0	Estimate
	Pipeline, inc jointing, excavation, backfill	100 dia. x ~7km	1400.0	-		0.0	1400.0	JB Pipelines
	Fittings, elbows, etc		0.5	-	0.5	0.0	1.0	Estimate
	Valves		3.6	-	3.6	0.0	7.2	Rawlinsons
	Filtration		1.0	-	1.0	0.0	2.0	Estimate
	Controls		2.0	-	2.0	0.0	4.0	Estimate
	Water Metering		0.2	-	0.2	0.0	0.4	Estimate
	Electrical Upgrade		3.0	-	3.0	0.0	6.0	Estimate
	Existing Equipment Removal		0.0	-	2.0	0.0	2.0	Estimate. Local labour
	Building Rehabilitation		3.9	-	3.9	5.0	12.7	Rawlinsons. Roof 10 x 5. Other includes fans, concrete repairs, etc
							-	
							-	
							-	
							-	
							-	
							-	
							-	
							-	
							-	
							-	
							-	
							-	
							-	
							-	
							-	
							-	
							-	
							-	
							-	
							-	
							-	
			1,426	-	33	5	1,464	

Sheberghan 100MW Reciprocating Gas Engine Power Station
Project Management

Ref	Item	Field		Home		Trips		Other	Total	
		(months)	(US$)	(months)	(US$)	Number	(US$)	(US$)	(US$ '000s)	
	Gas Conditioning									
	Tender Finalisation									
	Project Director	0.25	28,500	0.25	26,900	1	5,000		18.9	
	Team Leader	0.25	28,500	0.50	26,900	1	5,000		25.6	
	Gas Conditioning	0.50	28,500	1.00	26,900	1	5,000		46.2	
	Electrical Plant	0.25	28,500	0.50	26,900	1	5,000		25.6	
	Civil / Structural	0.25	28,500	0.50	26,900	1	5,000		25.6	
	Geotechnical		28,500	0.25	26,900		5,000		6.7	
	Operations & Maintenance	0.25	28,500	0.50	26,900	1	5,000		25.6	
	Environmental		28,500	0.25	26,900		5,000		6.7	
	Social		28,500	0.25	26,900		5,000		6.7	
	Procurement		28,500	0.25	26,900		5,000		6.7	
	Per Diems	1.75	3,600						6.3	
	Accommodation	1.75	1,500						2.6	
	Local Transport							2,500	2.5	
	Excess Baggage							500	0.5	
	Insurance	1.75	5,000						8.8	
	Miscellaneous							2,500	2.5	
	Subtotal								***217.4***	
	Tender Evaluation									
	Project Director		28,500	-	26,900		5,000		0.0	
	Team Leader		28,500	0.25	26,900		5,000		6.7	
	Gas Conditioning		28,500	0.75	26,900		5,000		20.2	
	Electrical Plant		28,500	0.25	26,900		5,000		6.7	
	Civil / Structural		28,500	0.25	26,900		5,000		6.7	
	Geotechnical		28,500	-	26,900		5,000		0.0	
	Operations & Maintenance		28,500	0.25	26,900		5,000		6.7	
	Environmental		28,500	0.25	26,900		5,000		6.7	
	Social		28,500	-	26,900		5,000		0.0	
	Procurement		28,500	0.25	26,900		5,000		6.7	
	Subtotal								***60.5***	
	Site Supervision									
	Project Director	0.50	28,500	2.00	26,900	5	5,000		93.1	
	Team Leader	1.50	28,500	2.50	26,900	10	5,000		160.0	
	Gas Conditioning	12.00	28,500	1.00	26,900	9	5,000		413.9	
	Electrical Plant	6.00	28,500	0.50	26,900	14	5,000		254.5	
	Controls	4.00	28,500	0.50	26,900	9	5,000		172.5	
	Civil / Structural	6.00	28,500	0.50	26,900	14	5,000		254.5	
	Geotechnical	1.00	28,500	1.00	26,900	3	5,000		70.4	
	Operations & Maintenance	1.50	28,500	1.00	26,900	3	5,000		84.7	
	Environmental	1.00	28,500	1.00	26,900	2	5,000		65.4	
	Social	0.50	28,500	0.50	26,900	2	5,000		37.7	
	Per Diems	34.00	3,000						102.0	
	Accommodation							-	0.0	Included in 2.1.16 Guesthouse
	Local Transport	1.00	50,000						50.0	
	Excess Baggage							2,000	2.0	
	Insurance	34.00	5,000						170.0	
	Miscellaneous							20,000	20.0	
	Subtotal								***1950.5***	
	Commissioning Supervision									
	Gas Conditioning	1.00	28,500	1.00	26,900	1	5,000		60.4	
	Electrical Plant	0.50	28,500	0.50	26,900	1	5,000		32.7	
	Controls	0.50	28,500	0.50	26,900	1	5,000		32.7	
									0.0	
	Per Diems	2.0	3,600						7.2	
	Accommodation	2.0	1,500						3.0	
	Local Transport							2,500	2.5	
	Excess Baggage							500	0.5	
	Insurance	2.0	5,000.0						10.0	
	Miscellaneous							2,500	2.5	
	Subtotal								***151.5***	
									2379.9	
	Power Plant									
	Tender Finalisation									
	Project Director	0.25	28,500	0.25	26,900	1	5,000		18.9	
	Team Leader	0.25	28,500	0.50	26,900	1	5,000		25.6	
	Mechanical Plant	0.50	28,500	1.00	26,900	1	5,000		46.2	
	Electrical Plant	0.25	28,500	0.50	26,900	1	5,000		25.6	
	Civil / Structural	0.25	28,500	0.50	26,900	1	5,000		25.6	
	Geotechnical		28,500	0.25	26,900		5,000		6.7	
	Operations & Maintenance	0.25	28,500	0.50	26,900	1	5,000		25.6	
	Environmental		28,500	0.25	26,900		5,000		6.7	
	Social		28,500	0.25	26,900		5,000		6.7	
	Procurement		28,500	0.25	26,900		5,000		6.7	
									0.0	
	Per Diems	1.75	3,600						6.3	
	Accommodation	1.75	1,500						2.6	
	Local Transport							2,500	2.5	
	Excess Baggage							500	0.5	
	Insurance	1.75	5,000						8.8	
	Miscellaneous							2,500	2.5	
	Subtotal								***217.4***	
	Tender Evaluation									
	Project Director		28,500	0.25	26,900		5,000		6.7	
	Team Leader		28,500	0.50	26,900		5,000		13.5	
	Mechanical Plant		28,500	0.75	26,900		5,000		20.2	
	Electrical Plant		28,500	0.50	26,900		5,000		13.5	
	Civil / Structural		28,500	0.50	26,900		5,000		13.5	
	Geotechnical		28,500	0.25	26,900		5,000		6.7	
	Operations & Maintenance		28,500	0.50	26,900		5,000		13.5	
	Environmental		28,500	0.25	26,900		5,000		6.7	
	Social		28,500	0.25	26,900		5,000		6.7	
	Procurement		28,500	0.25	26,900		5,000		6.7	
	Subtotal								***107.6***	
	Site Supervision									
	Project Director	0.50	28,500	2.00	26,900	5	5,000		93.1	
	Team Leader	1.50	28,500	2.50	26,900	10	5,000		160.0	
	Mechanical Plant	21.00	28,500	1.00	26,900	16	5,000		705.4	
	Electrical Plant	12.00	28,500	0.50	26,900	14	5,000		425.5	
	Controls	8.00	28,500	0.50	26,900	9	5,000		286.5	
	Civil / Structural	12.00	28,500	0.50	26,900	14	5,000		425.5	
	Geotechnical	2.00	28,500	1.00	26,900	3	5,000		98.9	
	Operations & Maintenance	1.50	28,500	1.00	26,900	3	5,000		84.7	
	Environmental	0.50	28,500	1.00	26,900	2	5,000		51.2	
	Social	1.00	28,500	0.50	26,900	2	5,000		52.0	
	Per Diems	60.00	3,000						180.0	
	Accommodation							-	0.0	Included in 2.1.16 Guesthouse
	Local Transport	2.00	50,000						100.0	
	Excess Baggage							8,000	8.0	
	Insurance	60.00	5,000						300.0	
	Miscellaneous							30,000	30.0	
	Subtotal								***3000.5***	
	Commissioning Supervision									
	Mechanical Plant	1.00	28,500	1.00	26,900	1	5,000		60.4	
	Electrical Plant	0.50	28,500	0.50	26,900	1	5,000		32.7	
	Controls	0.50	28,500	0.50	26,900	1	5,000		32.7	
	Per Diems	2.0	3,600						7.2	
	Accommodation	2.0	1,500						3.0	
	Local Transport							2,500	2.5	
	Excess Baggage							500	0.5	
	Insurance	2.0	5,000.0						10.0	
	Miscellaneous							2,500	2.5	
	Subtotal								***151.5***	
									3476.9	