USAID | AFGHANISTAN
FROM THE AMERICAN PEOPLE

THE TECHNICAL AND ECONOMIC

FEASIBILITY OF DEVELOPMENT OF A GAS-FIRED THERMAL POWER FACILITY IN SHEBERGHAN, AFGHANISTAN

VOLUME IV: APPENDIX Q, POWER PLANT TECHNICAL SPECIFICATIONS

Prepared for
The Ministry of Energy and Water

Under the
U.S. Agency for International Development Afghanistan Energy Assistance Program

Prepared by
Advanced Engineering Associates International, Inc.
1707 L Street NW, Suite 725
Washington, DC 20036, USA
Tel:202-955-9080 / Fax: 202-955-9082
www.aeaiinc.com

Advanced ENGINEERING
ADVANCED ENGINEERING ASSOCIATES INTERNATIONAL

MARCH 2006

This publication was produced for review by the United States Agency for International Development. It was prepared by Advanced Engineering Associates International, Inc.

TABLE OF CONTENTS

VOLUME I

PREFACE iii

ABBREVIATIONS AND ACRONYMS vii

EXECUTIVE SUMMARY ES-1

1.0 INTRODUCTION 1.1

1.1 Background 1.1

1.2 Organization of this Report 1.1

2.0 PROJECT RATIONALE 2.1

2.1 Regional Context 2.3

2.2 Project Rationale Summary 2.5

3.0 PROJECT DEVELOPMENT 3.1

3.1 Foundational Technical Issues 3.1

3.1.1 Gas Supply Assessment 3.2

3.1.2 Power Transmission 3.3

3.2 Critical Path of Project Development 3.3

3.3 Plant Operation and Maintenance Issues 3.4

4.0 PROJECT TENDER AND CONSTRUCTION 4.1

4.1 Tender 4.1

4.1.1 Sheberghan Power Plant Package 4.2

4.1.2 Gas Conditioning Plant and Qarakent Water Supply Upgrade Package 4.4

4.2 Evaluation of Tenders 4.6

LIST OF FIGURES

Figure 2.1 Power Supply per Capita in Selected Emerging Market Countries 2.1

Figure 2.2 Projected Power Demand and Supply in the Balkh Region 2.3

Figure 2.3 North East Transmission System 2.4

Figure 3.1 Key Critical Path Sequences 3.4

Figure 4.1 Illustrative Example of a Tender Evaluation 4.8

LIST OF TABLES

Table 2.1 Summary Basic Peak Load Forecast for Afghanistan (MW) 2.2

Table 3.1 Sheberghan New Gas Production Cost 3.2

Table 4.1 Advantages and Disadvantages of Contract Approaches 4.1

Table 4.2 Design Requirements for Gas Conditioning Plant 4.5

VOLUME II: TECHNICAL MATERIAL

ANNEX 1: ORGANIZATION OF THE TECHNICAL MATERIAL

ANNEX 2: SCHEDULE, PROJECT DEVELOPMENT

ANNEX 3: GAS ASSESSMENT

ANNEX 4: DATA COLLECTION AND INTERVIEWS

ANNEX 5: SITE SELECTION

ANNEX 6: POWER PLANT ALTERNATIVES
ANNEX 7: POWER PLANT AND GAS CONDITIONING PLANT ENGINEERING
ANNEX 8: ENVIRONMENTAL ASSESSMENT
ANNEX 9: ECONOMIC ANALYSIS

VOLUME III: APPENDICES A THROUGH P

APPENDIX A TERMS OF REFERENCE
APPENDIX B QUESTIONS FROM AFGHAN GAS COMPANY
APPENDIX C SITE SELECTION ANALYSIS
APPENDIX D AFGHAN GAS DISTRIBUTION NETWORK
APPENDIX E GAS COMPOSITION OF DEVELOPED GAS FIELDS
APPENDIX F TECHNOLOGY SELECTION ANALYSIS
APPENDIX G LAYOUTS
APPENDIX H PROCESS FLOW DIAGRAMS
APPENDIX I HEAT AND MASS BALANCE
APPENDIX J PIPING AND INSTRUMENTATION DIAGRAM
APPENDIX K SINGLE LINE DIAGRAMS
APPENDIX L CONTROL SYSTEM BLOCK DIAGRAM
APPENDIX M MAP OF GAS & WATER PIPELINE
APPENDIX N PRELIMINARY PROJECT SCHEDULE
APPENDIX O EQUIPMENT MANUFACTURERS INFORMATION
APPENDIX P COST ESTIMATES

VOLUME IV: APPENDIX Q

APPENDIX Q POWER PLANT TECHNICAL SPECIFICATIONS

VOLUME IV: APPENDIX R

APPENDIX R GAS CONDITIONING PLANT TECHNICAL SPECIFICATIONS

TECHNICAL SPECIFICATIONS—POWER PLANT

DEVELOPMENT OF A GAS-FIRED THERMAL POWER FACILITY IN SHEBERGHAN

Advanced Engineering Associates International

Afghanistan Energy Assistance Program
ISLAMIC REPUBLIC OF AFGHANISTAN
Ministry of Energy and Water

MARCH 2006

TABLE OF CONTENTS

1.0 GENERAL 1
- 1.1 PROJECT DESCRIPTION AND SITE CONDITIONS 1
  - 1.1.1 General 1
  - 1.1.2 Site Location, Topography, and Soils 3
  - 1.1.3 Geology and Seismicity 4
  - 1.1.4 Climate and Air Quality 5
  - 1.1.5 Water Resources 6
  - 1.1.6 Sar-e-Pul Watershed 6
  - 1.1.7 Water Management 8
  - 1.1.8 Ecological Features 8
- 1.2 SCOPE OF WORK 8
  - 1.2.1 Civil 9
  - 1.2.2 Mechanical and Process Works 9
  - 1.2.3 Electrical Works 10
  - 1.2.4 Control and Instrumentation Works 11
  - 1.2.5 Studies 11
  - 1.2.6 Balance of Works 12
  - 1.2.7 Work Not Included 12
- 1.3 TERMINAL POINTS AND INTERFACES 13
  - 1.3.1 Mechanical 13
  - 1.3.2 Electrical 13
  - 1.3.3 Control and Instrumentation 14
  - 1.3.4 Communications 14
  - 1.3.5 Civil and Structural 14
- 1.4 DEFINITIONS 14
  - 1.4.1 Definition of Terms 14
  - 1.4.2 Units of Measurement 17
- 1.5 DRAWINGS AND DATA 18
  - 1.5.1 General 18
  - 1.5.2 Drawings and Data to Be Provided 18
  - 1.5.3 Submission and Approval 18
  - 1.5.4 Drawings and Data to Be Submitted 19
  - 1.5.5 Data and Drawings to Be Submitted Within One Month 20
  - 1.5.6 Data and Drawings to Be Submitted Within Six Months 20
  - 1.5.7 Revision of Contractor’s Drawings at Site 21
  - 1.5.8 As-Built Drawings 21
  - 1.5.9 Contract Drawings 22
  - 1.5.10 Erection Drawings 22
  - 1.5.11 Use of Contractor’s Drawings 22
- 1.6 CODES AND STANDARDS 22
  - 1.6.1 General 22
  - 1.6.2 Referenced Codes and Standards 23
- 1.7 QUALITY ASSURANCE REQUIREMENTS 26
  - 1.7.1 Quality System 26
  - 1.7.2 Contract Quality Plan 26

1.7.3 Overall Inspection and Test Plan 27
1.7.4 Quality System 27
1.7.5 Quality Records 28
1.7.6 Identification and Traceability 28
1.8 INSPECTION AND TESTING 28
1.8.1 General Requirements 28
1.8.2 Basic Inspection and Testing During Manufacture 28
1.8.3 Works Testing 28
1.8.4 Erection Testing 29
1.8.5 Tests on Completion 29
1.8.6 Preliminary Site Tests / Pre-commissioning Tests 29
1.8.7 Mechanical Plant 30
1.8.8 Motors 30
1.8.9 Transformers 30
1.8.10 Live Tests 31
1.8.11 Switchgear and Protection 32
1.8.12 Earthing System 32
1.8.13 Cables and Accessories 32
1.8.14 Instrumentation, Protection, Metering and Control Systems 32
1.8.15 Functional Tests / Commissioning Tests 33
1.8.16 Commissioning Requirements 33
1.8.17 Functional Tests 35
1.8.18 Trial Run 36
1.8.19 Reliability Test Run 36
1.8.20 Performance Tests 37
1.8.21 Defects Notification Period 40
1.9 PLANT IDENTIFICATION SYSTEM 41
1.9.1 General 41
1.9.2 Nameplates and Labels 41
1.9.3 Plant Labeling of Control Valves 42
1.10 MANUALS 42
1.10.1 Manuals—General 42
1.10.2 Operations Manuals 43
1.10.3 Maintenance Manuals 43
1.10.4 Distributed Control System Manual 44
1.10.5 Commissioning Manual 45
1.11 SPARE PARTS, TOOLS, TEST EQUIPMENT, AND CONSUMABLES 45
1.11.1 Spare Parts 45
1.11.2 Tools and Test Equipment 46
1.11.3 Consumables 46
1.12 PACKAGING AND STORAGE 47
1.12.1 General 47
1.12.2 Installed Plant 47
1.13 PERSONNEL AND TRAINING 47
1.13.1 Personnel 47
1.13.2 Training 48
1.13.3 Site Training 48
1.13.4 Plant Operators 48

1.13.5 Structured Training 48
1.14 HAZOPS 49
1.14.1 General Requirements 49
1.14.2 Process and Control HAZOP 49
1.14.3 Electrical Power Systems HAZOP 49
1.15 HEALTH AND SAFETY 50
1.15.1 Health and Safety Regulations 50
1.15.2 Contractor's Responsibility 51
1.16 STATUTORY REGULATIONS AND APPROVALS 51
2.0 PERFORMANCE AND OPERATING REQUIREMENTS 52
2.1 GENERAL 52
2.1.1 Introduction 52
2.1.2 Overview of Project Objectives 54
2.2 PROJECT INPUTS 54
2.2.1 Natural Gas 54
2.2.2 Untreated Water 54
2.2.3 Electrical Supplies 54
2.3 PROJECT OUTPUTS 54
2.3.1 110kV Power to the Grid 54
2.3.2 Thermal Energy 54
2.3.3 Electrical Supply 54
2.4 PERFORMANCE GUARANTEES 55
2.5 OPERATION & MAINTENANCE CONTRACT 55
2.5.1 General 55
2.5.2 Duration 55
2.5.3 Staff 56
2.5.4 Spares 56
2.5.5 Plant Availability 56
2.6 SITE SPECIFIC REQUIREMENTS 56
2.7 TYPE OF PLANT 56
2.8 PLANT LAYOUT 57
2.9 OVERALL PERFORMANCE REQUIREMENTS 57
2.9.1 General 57
2.9.2 Operational Requirements. 57
2.9.3 Design Life and Plant Availability 58
2.10 ENVIRONMENTAL REQUIREMENTS 58
2.10.1 Noise 58
2.10.2 Emissions to Air 59
3.0 FUEL SPECIFICATION 60
3.1 GENERAL 60
4.0 POWER PLANT 61
4.1 PRIME MOVER GENERAL REQUIREMENTS 61
4.2 GAS TURBINE GENERATOR SETS 62
4.3 GAS ENGINE GENERATOR SETS 64
4.4 STEAM TURBINE GENERATOR SETS 64
4.5 HEAT RECOVERY STEAM GENERATORS 65
4.6 EXHAUST HEAT RECOVERY UNITS 66

4.7 AIR COOLED CONDENSERS AND COOLERS 67
4.8 EXHAUST STACKS 67
4.9 GAS RECEPTION STATION 68
4.10 FUEL GAS COMPRESSION 69
4.11 WATER TREATMENT PLANT 69
4.12 FUEL GAS 69
4.13 COMPRESSED AIR—PLANT AND INSTRUMENT 70
4.14 STEAM CONDENSATE 70
4.15 EMERGENCY POWER—ESSENTIAL SERVICES 70
4.16 BLACK START AND EMERGENCY POWER GENERATION 71
4.17 START UP AND AUXILIARY BOILER 71
4.18 TEST, MEASUREMENT, AND SAMPLING STATIONS 71
5.0 THERMAL ENERGY TRANSFER SYSTEM 72
5.1 GENERAL 72
5.2 SCOPE OF SUPPLY 72
5.3 CODES AND STANDARDS 72
5.4 TEST, MEASUREMENT AND SAMPLING STATIONS 72
6.0 FLARE SYSTEM 73
7.0 PLANT UTILITIES 74
8.0 FIRE PROTECTION 75
8.1 GENERAL 75
8.2 FIRE MAIN PIPEWORK 76
8.2.1 Isolating and Fire Hydrant Valves 76
8.2.2 Storage Tanks Spray System 76
8.3 FIRE ALARM PANEL 76
8.4 MANUAL CALL POINTS 76
8.5 SMOKE AND HEAT DETECTORS 77
8.6 ALERTING DEVICES 77
8.7 FIRST AID FIRE APPLICATIONS 77
8.8 ACCEPTANCE TESTS 77
9.0 CONTROL AND INSTRUMENTATION 78
9.1 GENERAL 78
9.2 SCOPE 78
9.3 SYSTEM DESCRIPTION 79
9.3.1 Architecture 79
9.3.2 Unitization of C&I Equipment 80
9.3.3 Points of Control and HMI Locations 80
9.3.4 Redundancy 80
9.3.5 Application Communications 81
9.4 UNIT CONTROL SYSTEM 81
9.5 STATION CONTROL SYSTEM 81
9.5.1 General 81
9.5.2 Facilities 81
9.5.3 DCS Operator Interface 82
9.5.4 Interface to Gas Conditioning Plant DCS 83
9.5.5 Alarm Sirens 83
9.5.6 Sequence of Event Recording (SER) 83

9.5.7 Data Historian 84
9.6 TIME SYNCHRONIZATION 84
9.7 PROTECTIVE SYSTEMS 84
9.7.1 General 84
9.7.2 Hazardous Area Classification 84
9.7.3 SIL Classification 84
9.8 INSTRUMENTED PROTECTIVE SYSTEMS 85
9.8.1 Requirement 85
9.8.2 Protective System Characteristics 85
9.8.3 Structure 85
9.8.4 IPS I/O 85
9.8.5 System Application Software 85
9.8.6 Fire and Gas Detection and Protection Systems 86
9.8.7 Fire and Gas Detectors 86
9.9 MACHINERY CONDITION MONITORING SYSTEM 86
9.10 INSTRUMENTATION 86
9.10.1 General 86
9.10.2 Primary Sensors 86
9.10.3 Transducers 87
9.10.4 Transmitters 87
9.10.5 Impulse Lines 88
9.10.6 Mounting of Plant Instruments 88
10.0 COMMUNICATIONS SYSTEM 89
10.1 GENERAL 89
10.2 COMMUNICATION SYSTEM STANDARDS 89
10.3 COMMUNICATIONS REQUIREMENTS 89
10.3.1 Internal 89
10.3.2 External 90
10.4 FIBER OPTIC CABLE 90
10.5 FIBER CABLE JUNCTION BOXES 90
10.6 PATCH PANELS 91
10.7 FIBER CONNECTORS 91
10.8 NETWORK HARDWARE 92
10.8.1 LAN/WAN 92
10.8.2 Bridges, Hubs, Switches, Routers 92
10.9 PROTECTION SIGNALING 92
10.10 ENGINEERING NETWORK 93
10.11 SDH NETWORK 93
10.11.1 General 93
10.11.2 Network Services 93
10.11.3 Performance 93
10.12 SDH MULTIPLEX EQUIPMENT 93
10.12.1 General 93
10.12.2 Interfaces 94
10.12.3 Synchronizing 94
10.12.4 Jitter and Wander 95
10.12.5 Channel Assignment 95
10.12.6 Installation 95

10.12.7 Control or Service Terminal 95
11.0 SUPERVISORY CONTROL AND DATA ACQUISITION (SCADA) 96
11.1 INTERFACE TO THE FUTURE NETWORK CONTROL CENTER 96
11.2 MINIMUM SCADA INTERFACE SIGNALS 96
12.0 ELECTRICAL SYSTEMS 98
12.1 GENERAL 98
12.2 SCOPE OF SUPPLY 98
12.3 GENERATORS 99
12.3.1 IEC Publications 99
12.3.2 Rating and Capability 99
12.3.3 Generator Output Requirements 99
12.3.4 Efficiency and Losses 100
12.3.5 Performance Guarantees 100
12.3.6 Temperature Limitation 100
12.3.7 Reactance and Time Constants 101
12.3.8 Negative Phase Sequence Capability 101
12.3.9 Waveform 101
12.3.10 Slip Rings and Brush Gear 101
12.3.11 Windings 101
12.3.12 Generator Heaters 103
12.3.13 Miscellaneous Instruments and Devices 103
12.3.14 Excitation System 104
12.3.15 Neutral Earthing Equipment 107
12.4 11 KV SWITCHGEAR 107
12.5 MAIN TRANSFORMERS 109
12.5.1 General 109
12.5.2 Transformer Testing 110
12.6 AUXILIARY SUPPLY 111
12.6.1 Auxiliary Transformers 111
12.6.2 400VAC Switchboards 111
12.6.3 Lighting and Small Power 112
12.6.4 Electrical Supplies to Gas Conditioning Plant and Fire Pumps 112
12.6.5 Lighting 112
12.6.6 Socket Outlets 113
12.6.7 Phase Balancing 113
12.7 BLACK START GENERATOR 113
12.8 DC AND UPS SYSTEM 113
12.8.1 General 113
12.8.2 Batteries 113
12.9 Uninterruptible Power Supply (UPS) 114
12.10 EARTHING 114
12.11 PROTECTION SYSTEMS 115
12.11.1 General 115
12.11.2 Circuit Breaker Fail Protection 115
12.11.3 Trip Circuit Supervision 116
12.11.4 Under-voltage Protection 116
12.11.5 Instrument Transformers 116
12.11.6 Generator Protection System 116

12.11.7 11kV Bus Protection 117
12.11.8 Transformer Protection System 117
12.11.9 Protection of Medium Voltage Cables 117
12.11.10 Transmission Line Protection 117
13.0 110 KV POWER PLANT AND SUBSTATION EQUIPMENT 118
13.1 GENERAL 118
13.2 HV TRANSMISSION SYSTEM CHARACTERISTICS 119
13.3 10 KV PRIMARY EQUIPMENT 119
13.3.1 General 119
13.3.2 110 kV Circuit Breakers 119
13.3.3 110 kV Disconnectors/ Earthing Switches 120
13.3.4 110 kV Voltage Transformers 121
13.3.5 110 kV Lightning Arresters 121
13.3.6 Medium and High Voltage Terminals 121
14.0 TRANSMISSION LINE 122
14.1 SCOPE 122
14.2 EXISTING LINE 122
14.3 POWER STATION LINE 122
14.4 ELECTRICAL DESIGN 122
14.5 MECHANICAL DESIGN 123
14.5.1 Concrete Poles 123
14.6 DESIGN DATA-ASSUMPTIONS AND DETERMINATIONS 123
14.6.1 Wind Loads 123
14.6.2 Design Loading Assumptions 123
14.6.3 Design Loading Requirements 124
14.6.4 Conductors and Overhead Ground-wire 124
14.7 CLEARANCES 124
14.7.1 Conductor Clearance to Ground and Objects on the Ground 124
14.8 MATERIAL SPECIFICATIONS 125
14.8.1 Conductors and Insulators 125
14.8.2 Overhead Conductor 125
14.8.3 Overhead Groundwire 125
14.9 GROUNDING 125
14.9.1 General 125
14.9.2 Structure Footing Resistance 126
14.9.3 Earthing Rods 126
14.9.4 Radiating Earth Conductors 126
14.9.5 Connections 126
15.0 CIVIL WORKS 127
15.1 SCOPE OF SUPPLY 127
15.2 CIVIL REQUIREMENTS 127
15.2.1 Geotechnical Investigation 127
15.2.2 Regional Road Infrastructure Rehabilitation 127
15.2.3 Bulk Earth Works 128
15.2.4 Site Access and Plant Maintenance Access Roads 128
15.2.5 Drainage and Sewerage 128
15.2.6 Fences, Gates and Landscaping 128

15.2.7 Powerhouse Building and Utility Annex 129
15.2.8 Administration Building 129
15.2.9 Foundations for Plant and Equipment 130
15.2.10 Stairways, Ladders, and Platforms 130
15.2.11 Guardhouse 130
15.2.12 Chemical Storage 130
15.2.13 Engineering Workshop and Bulk Store 130
15.3 CIVIL DESIGN CRITERIA 131
15.3.1 General 131
15.3.2 Dead Loads 131
15.3.3 Equipment Loads 131
15.3.4 Live Loads 131
15.3.5 Snow Loads 132
15.3.6 Wind Loads 132
15.3.7 Earthquake Loads 132
15.3.8 Crane Loads 132
15.3.9 Earth Pressures 133
15.3.10 Groundwater Pressures 133
15.3.11 Construction Loads 133
15.3.12 Load Combinations 133
15.3.13 Deflection Limits 133
15.3.14 Stability of Structure 134
15.3.15 Foundation Design 134
15.4 DESIGN OF DRAINAGE SYSTEM 134
15.4.1 General 134
15.4.2 Stormwater 134
15.4.3 Sanitary Sewer 135
15.4.4 Contaminated Water 135
15.5 ROAD AND YARD PAVING 135
16.0 MAINTENANCE FACILITIES 136
16.1 GENERAL 136
16.2 TOOLS AND EQUIPMENT 136
16.2.1 Vehicles 136
16.2.2 Workshop Machines 136
16.2.3 Portable Electric and Pneumatic Powered Hand Tools 136
16.2.4 Welding Equipment 136
16.2.5 Lifting Equipment 136
16.2.6 General Handling Equipment 137
16.2.7 Portable Equipment 137
16.2.8 Engine Test and Monitoring Equipment 137
16.2.9 Electrical and Instrument Test Equipment 137
16.2.10 Computer Support Equipment 138
16.2.11 Operational Support Equipment 138
16.2.12 Personal Protection Equipment for all Aspects of Plant 138
16.2.13 Chemical Laboratory Equipment 138
16.2.14 Manufacturers' Special Tools 138

LIST OF FIGURES

Figure 1	Site Location	2
Figure 2	Gerquduq Gas Processing Facility adjacent to which Power Plant and Gas Conditioning Plant will be constructed. View looking south from site access road (March 2005)	4
Figure 3	Gerquduq Gas Processing Facility looking northeast over lower Sar-e-Pul River Valley (March 2005)	4
Figure 4	Precipitation and Evapotranspiration at Sheberghan	5
Figure 5	Discharge Curves along the Sar-e-Pul River	7

LIST OF TABLES

Table 1	Acceptable Coding Body Or Institute	23
Table 2	Specific Acceptable Codes	23
Table 3	Ambient Air Quality Guidelines	59
Table 4	Air Emission Requirements for Gas-Fired Thermal Power Plants: Parameters and Maximum Values	59
Table 5	Effluent Discharge Requirements for Thermal Power Plants: Parameters and Maximum Values	59
Table 6	Effluent Discharge Requirements For Thermal Power Plants: Parameters And Maximum Values, Metals (Mg/L)	59
Table 7	Conditioned Gas Specification	60
Table 8	Permitted Temperatures for Generator Parts	101
Table 9	Lighting Source Type and Intensity	112
Table 10	Electrical Characteristics of Power Line	123

LIST OF APPENDICES

APPENDIX 1

Schedule of Technical Data and Performance Guarantees

APPENDIX 2

Drawings

Drawing List

1.0 GENERAL

1.1 PROJECT DESCRIPTION AND SITE CONDITIONS

1.1.1 GENERAL

The Government of Afghanistan (GoA) plans to expand the availability of electric power in northern Afghanistan. Currently, it is planned that the region will be supplied by imported power from Uzbekistan until an alternative/additional supply can be developed.

Among the wealth of natural indigenous resources in Afghanistan available for potential use in the energy sector are the gas fields within the Jowzjan Region around the city of Sheberghan.

Studies have concluded that a natural gas powered Power Plant of around 100 MWe should be located at the Gerquduq (Jar Quduq) gas field South West of Sheberghan. See Figure 1, below, for map locating the site.

The Power Plant to be designed, supplied, installed and commissioned as part of this contract is a separate but integral portion of the Power Plant facility at the Gerquduq site, Sheberghan, northern Afghanistan. See Figures 1, 2 and 3, below, showing site plan of available land for the new Power Plant and photographs of adjacent existing gas processing plant and facilities.

This Contract shall be conducted in accordance with the guidelines and definitions as set out in FIDIC (Federation Internationale des Ingenieurs-Conseils) Conditions of Contract for EPC Turnkey Contracts.

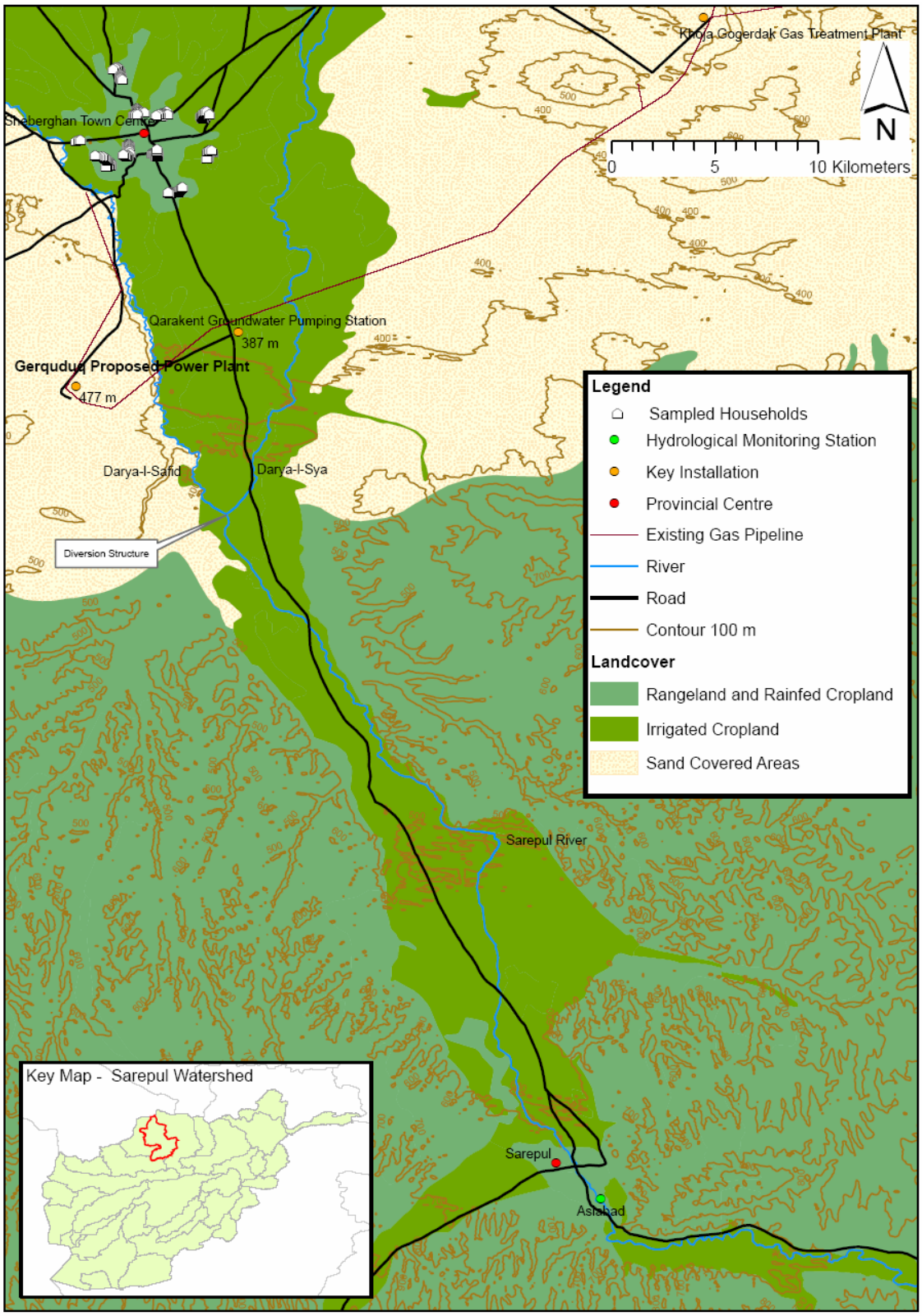

Figure 1 Site Location

The overall project involves three contracts as follows

- Power Plant Contract—consisting of multiple generator units totaling approximately 100MWe, piping systems and associated auxiliary plant including connection to the local Sheberghan substation, and repair of a damaged 110 KV overhead transmission line.
- Heat recovered from the Power Plant will be used for process heat in the Gas Conditioning Plant.
- Gas Conditioning Plant Contract—The Gas Conditioning Plant contract includes the supply and installation of the process equipment and all work in order to operate the Gas Conditioning Plant and provide gas to the new power plant. The Gas Conditioning Plant will be capable of processing all of the produced sour gas destined for the Power Plant.
- Gas Well Rehabilitation Contract—consisting of restoration of selected gas wells in the Gerquduq and Yatimtaq gas fields to production status to provide gas to the Gas Conditioning Plant and Power Plant. Work may require cleaning out of existing wells and possibly re-casing and fitting of well head equipment including valves, chokes and corrosion inhibitor connections. It may also involve drilling entirely new wells and fitting them out to production status. This work will be done under ADB funding.

It is expected that the three contracts will run in parallel.

1.1.2 SITE LOCATION, TOPOGRAPHY, AND SOILS

The proposed Power Plant is situated within and adjacent to the existing Gerquduq gas processing facility approximately 15 km southwest of Sheberghan City in Jawzjan Province, in northwest Afghanistan. A 110/35/6 kV substation and an abandoned gas fired generation station are also situated adjacent to the site. A sealed road connects the site to Sheberghan City and comprises a 15 minute drive.

The site is on the edge of a desert area with minimal observed land utilization other than 110 kV transmission lines extending to and from the substation, and a network of gas wells and mainly buried pipelines scattered across an area of approximately 25 square kilometers to the south of the site.

To the northeast about 7 km away is the local groundwater source located at Qarakent (N36º 34' and E65º 47'). Further northeast, about 27 km away, lies another potential source of gas for the Gas Conditioning Plant, which is manifolded via the Yatimtaq Gas Production station. This manifolds gas from either the Khoja Gogerdak field or the Yatimtaq field.

The topography around the site forms part of an extensive loess covered plain in northern Afghanistan which abuts the foothills of the Hindu Kush to the south and extends across the border into Turkmenistan and Uzbekistan to the north. Loess comprises fine soil particles that are transported during the summer by the prevailing northwest wind from the central Asian plains and deposited on the foot of the mountains where the wind’s velocity is reduced by the steep terrain rising from the plain. The plain is gently rolling or flat with elevation 350–550 m. In the Sheberghan area the plain is dissected by the Sar-e-Pul River valley approximately 3 km east of the Gerquduq site (see Figure 1, above). The Sar-e-Pul valley is about 5 km wide near Gerquduq and broadens downstream to about 11 km wide near Sheberghan. The Power Plant site itself is relatively flat but somewhat exposed on a localized topographic high at an elevation of around 500 m. The site has a commanding view over the Sar-e-Pul River valley in the northeast quadrant with Sheberghan City visible in the distance.

Figure 2 **Gerquduq Gas Processing Facility adjacent to which Power Plant and Gas Conditioning Plant will be constructed. View looking south from site access road (March 2005)**

Figure 3 **Gerquduq Gas Processing Facility looking northeast over lower Sar-e-Pul River Valley (March 2005)**

The main soil type on the plain and around the site is loessy loam. The loess soils generally have excellent permeability and can absorb large quantities of water.

1.1.3 GEOLOGY AND SEISMICITY

The geology of the area comprises Neogene and Quaternary (Pleistocene) sediments comprising loess cover beds some tens of meters thick overlying alternating layers of pebbles/gravels, sands, silts and clays. The sediments represent the products of erosion of the mountains. Modern alluvial deposits occur along the current river valleys. The quaternary sediments overlie

Mesozoic limestones, conglomerates, sandstones, siltstones and shales extending to several kilometers depth. The Mesozoic rocks are gently folded and faulted forming the reservoir strata and structures for the region's natural gas resources. The Mesozoic rocks are exposed to the south in the foothills of the Hindu Kush.

The area is seismically active being adjacent to the northern edge of the Hindu Kush where organic processes are active. The region has a history of strong earthquakes exceeding 5.8 on the Richter scale. Refer to section 15 of this specification for design criteria.

1.1.4 CLIMATE AND AIR QUALITY

The climate of the Sheberghan region is dry subtropical with wide annual daily temperature variations.[1] Winter (December to February) is mild with mostly cloudy weather and mean monthly minimum and maximum temperatures of -1.5 to 1.5 ºC and 7 to 10 ºC respectively.

Winter brings cold winds and clear weather where temperatures can occasionally fall to as low as –22 ºC.[2] Precipitation (4 to 6 days per month) falls mainly as rain and occasional snowfalls are possible, however, the fallen snow melts quickly.

Spring (March and April) is characterized by rapid daytime warming and precipitation occurs as brief downpours. Rainfall is highest during March averaging 56.4 mm. Average annual rainfall is 231mm.

Summer (May to September) is hot and dry with mean monthly maximum and minimum temperatures of 30 to 39 ºC and 14 to 22 ºC respectively. Daytime maximum temperatures of 45 ºC can occur. Daytime relative humidity during summer does not exceed 25 to 30% and rain is very rare.

Fall (October, November) begins clear and dry progressively turning cloudy and rainy. Days are warm and nights are cool.

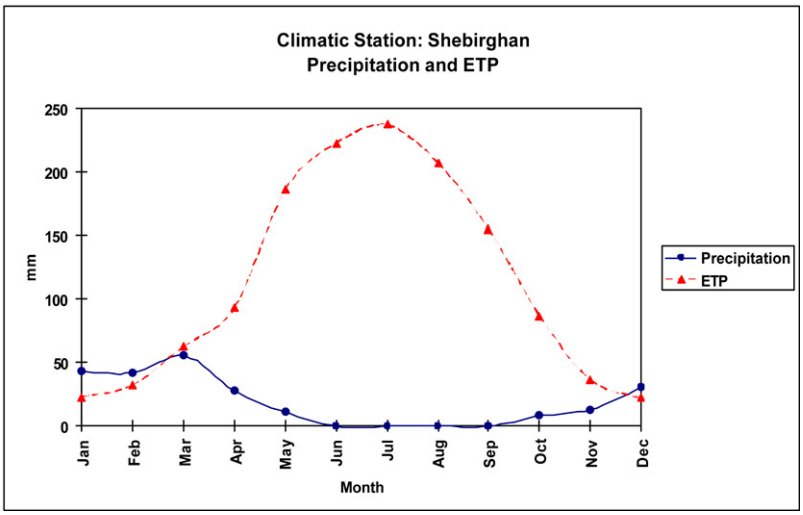

Figure 4 Precipitation and Evapotranspiration at Sheberghan

Source: Favre and Kamal, 2004, Watershed atlas of Afghanistan: working document for planners, Kabul: FAO/FAAHM-UNDP/AIMS-SDC.p. 146

[1] Climatic information was obtained from several sources including: Favre, R and Kamal, GM 2004, *Watershed Atlas of Afghanistan,* Kabul. FAO; Lee, K.D., 2003, *Terrain Analysis of Afghanistan*, Minneapolis, East View Cartographic; and Hong Kong Observatory website http://www.hko.gov.hk/wxinfo/climat/world/eng/asia/westasia/sheberghan_e.htm

[2] Lee, K.D., 2003, *Terrain Analysis of Afghanistan*, Minneapolis, East View Cartographic, p78.

Winds are primarily northwesterly and southeasterly. Easterly winds are also common in winter and fall. Prevailing wind speeds are 2 to 3 m/s. Rarely, strong winds (up to 20 m/s) occur in late spring or summer and are usually accompanied by dust storms, reducing visibility to several meters.

No air quality data was available for the Sheberghan area other than one spot sample taken in Mazar-e-Sharif by UNEP in 2002.[3] Ambient air quality at the Gerquduq site is likely to be good based on the following site characteristics:

- The site is in a semi desert area 15 km southwest of Sheberghan City (the nearest potential source of air pollution).
- Prevailing winds would tend to push any air pollution from Sheberghan city away from the sit.
- The Gerquduq site is relatively exposed to wind and topographically not prone to atmospheric inversion.

In Sheberghan city dust and vehicle emissions appear to be the main factors negatively affecting air quality although there is evidence that air quality is also affected by the burning of oil refinery residues.

1.1.5 WATER RESOURCES

Natural storage of water in the form of winter precipitation (snow) at elevation above 2,000 m represents 80% of Afghanistan's water resources (excluding fossil groundwater). The amount of water received in these areas through precipitation is estimated to be in the order of 150,000 million m^3. The rest of the country receives only 30,000 million m^3 annually through rainfall resulting in a total amount of 180,000 million m^3 for the whole country (Favre and Kamal, 2004).[4] Water is Afghanistan's most precious natural resource and water management systems throughout Afghanistan have been severely damaged during years of internal conflict. The need for integrated water resource management to balance the competing demands for water resources is a key priority for the country. Competing water demands include:

- Water supply, drainage and wastewater management in urban areas
- Rural water supply for domestic purposes
- Agricultural water use
- Generation of hydropower
- Industrial water uses
- Water to support natural systems (forests, rangelands and wetlands)

Most Afghans do not have access to safe drinking water. This, in combination with a lack of sanitation and hygiene has serious consequences for the health and well-being of the population. An estimated 99% of developed water resources are used for irrigation. Groundwater resources and recharge rates throughout the country are poorly understood which has resulted in a depletion of deep aquifers and pollution of shallow groundwater resources. Demands on surface and groundwater resources are likely to grow substantially due to the large number of returning refugees and internally displaced people.

1.1.6 SAR-E-PUL WATERSHED

The Gerquduq site is situated within the Sar-e-Pul watershed of the Northern River Basin one of five river basins recognized in Afghanistan. The Northern River Basin has the smallest annual

[3] UNEP, 2003, *Afghanistan Post-Conflict Environmental Assessment,* Geneva.

[4] Op. cit. p34

flow contribution in Afghanistan with only 2% of the total but all of the water is used within the boundaries of the country. The Sar-e-Pul watershed takes its source in the high mountains of the central highlands and has an area of 16,743 km^2 comprising 2.59% of Afghanistan's total area. The catchment is drained by two main rivers, the Ab-I Sya River and the Sar-e-Pul River. The two rivers converge 10 km south of Sar-e-Pul town and take the name of Sar-e-Pul until reaching the diversion structure splitting the river into natural channels: Darya-I Sya (east side) and Darya-I Safid (west side). The channels dry up in irrigation canals or desert sands north of Sheberghan well before reaching the northern border and Amu Darya River.

The figure below shows the discharge curve for the Sar-e-Pul River and illustrates the strong influence of spring snow melt on monthly river flow with an average annual flow rate around 6 m^3/s.

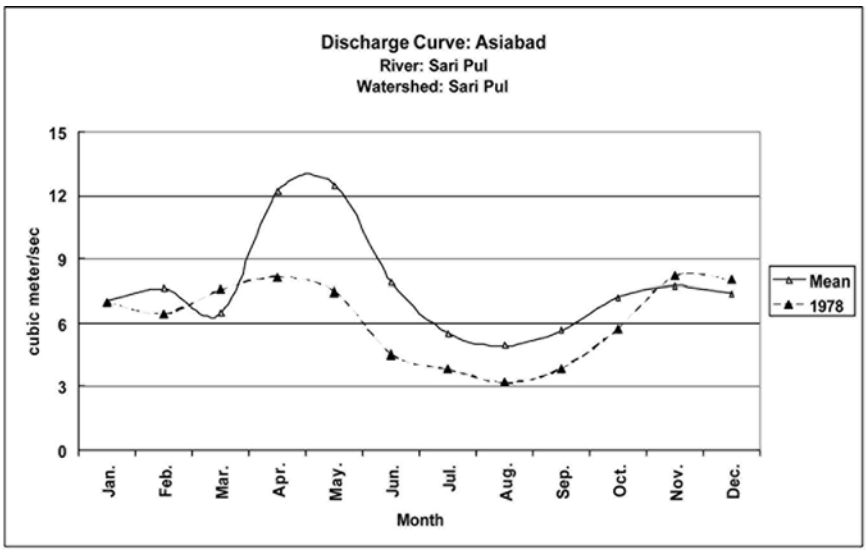

Figure 5 Discharge Curves along the Sar-e-Pul River

Source: Favre and Kamal, 2004, Watershed atlas of Afghanistan: working document for planners, Kabul: FAO/FAAHM-UNDP/AIMS-SDC.p147

There is little quantitative information available regarding groundwater resources in the Sheberghan apart from water supply data from the Afghan Gas Company's Qarakent pumping station. The Qarakent groundwater pumping station is located in the lower Sar-e-Pul River valley about 10 km south of Sheberghan and originally provided water for both the Gerquduq and Khoja Gogerdak gas treatment plants as well as for domestic supply of Afghan Gas Company employees at a rate of about 1,500 m^3 per day, from 12 wells. The gas treatment plants have not been operational for many years and currently only 2 water wells at Qarakent are operational. This data suggests that groundwater resources in the Sar-e-Pul valley could be significant. However, there is little reliable information to indicate whether or not an abstraction rate of 1500 m^3 per day is sustainable for the Qarakent groundwater resources.

Based on largely anecdotal data, Banks (2002)[5] attempted to estimate the normal distributed recharge for Neogene / Quaternary lowland aquifer complexes in Afghanistan and suggests the range 50–150 mm/yr. Whilst acknowledging the theoretically dubious methodology used in this estimation, Banks notes that this figure translates to a maximum renewable resource of 1.6 to 4.8 liters per second per square kilometer in lowland Neogene / Quaternary sediments in Afghanistan as a whole.

[5] Banks, D., 2002, *Guidelines for Sustainable Use of Groundwater in Afghanistan,* Norwegian Church Aid – Afghanistan Program (NCAAP) Policy Document. p13.

Groundwater is ultimately recharged by precipitation (rain and snow), however direct recharge by precipitation onto low land areas (due to very low rainfall) is likely to be very small. Thus, the recharge mechanism at Qarakent is likely to be as follows;

- Quaternary aquifers recharged in the foothills by rivers and streams descending from the high mountains and infiltrating into coarse grained alluvial fans. The recharge would likely be highest during the snowmelt season and therefore highly dependent on quantities of winter snowfall.
- Some infiltration of water enters Quaternary aquifers through the bed of the Sar-e-Pul River.
- Potentially significant recharge occurs via leakage from irrigation channels along the Sar-e-Pul valley.

1.1.7 WATER MANAGEMENT

Responsibility for management of water resources within the GoA is as follows:

- Surface water resources: Ministry of Energy and Water
- Groundwater resources: Ministry of Mines and Industry

In practice ministries appear to lack the resources and technical expertise to adequately manage the resources for which they have responsibility. There appears to be no effective system of permits or licensing for water abstraction in Afghanistan. It has been noted that in the Northern River Basin local and regional commanders control water distribution.[6]

1.1.8 ECOLOGICAL FEATURES

The natural vegetation around the Gerquduq site is semi desert. Ground cover is sparse consisting of drought resistant grasses (needle grass, sheep's fescue, blue grass sand sedge). The grass usually dies back by mid- summer and the terrain takes on a desert appearance. There are no protected areas nearby. Around the site a long clawed ground squirrel (Spermophilopsis leptodactylus) was commonly seen and appeared to be the main prey of the commonly observed falcon. The Gerquduq area is also within the documented range of the following vertebrates:[7]

- Jerboas (Allactaga)
- Caracal (Caracal)
- Striped Hyaena (Hyaena hyaena)

Arable land in the Sar-e-Pul Valley about 4 km east of the site are planted with grain including wheat, barley and corn.

1.2 SCOPE OF WORK

The work to be performed under this specification is the full works associated with the Sheberghan Power Plant. The contract will include a complete power station on a greenfield site, to provide 100 MWe to an adjacent substation. There shall be multiple units, either gas turbine or gas engine driven, the output of any one generator shall be a maximum of 20 MWe. Conditioned gas shall be received at the boundary, electrical energy shall be delivered to the substation, and thermal energy delivered to the Gas Conditioning Plant.

[6] Favre and Kamal, op. cit. p85

[7] Geokart, 1985, National Atlas of Afghanistan, Warsaw.

The work consists of design, manufacture, inspection and testing at the manufacturing facilities. packing for export, or internal transport, shipment, customs clearance, taxes, duties, delivery to site, unloading, storing and handling at site, complete erection, finish painting, testing and commissioning, performance testing, handling trials, maintenance and supervision of operation during testing and commissioning, warranty and inspection prior to final acceptance. The Contractor will be obligated to enter into an Operation and Maintenance Contract for the Power Plant's first life cycle.

Unless specifically stated as an exception in the tendered offer and supported by a full explanation, the Contractor shall be deemed to have fully concurred with the practicality and sufficiency of the design and layout of the works to ensure reliable, safe operation with freedom from undue stresses and from unsatisfactory performance.

The Contractor is to include the whole works which are described in or implied by the contract document. Any item or matter missing from the contract document which may be inferred for the satisfactory completion of the works shall be deemed to be included in the contract price.

Works shown in the tender drawings, but not mentioned or described in the technical specifications and works described in the technical specifications but not shown on the Tender drawings shall never the less be deemed to be included in this contract and covered by the contract price.

The works to be provided under this Contract shall include, but not necessarily be limited to, the following items.

1.2.1 CIVIL

- Preliminary and general works
- Site preparation, including stripping, grading, compacting, and leveling
- Establishment of facilities on site
- Foundations
- Temporary access roads, site roads, security fencing, guard house and landscaping
- Soil investigation
- Surveying and setting out
- General excavation and backfilling
- Drainage and underground services
- Building and equipment foundations, bunkers, trenches for cables and pipes
- Structural works for pipebridges and equipment supports
- Reinstatement and site works

1.2.2 MECHANICAL AND PROCESS WORKS

- Buildings to house generating plant, storage of spares, workshop and control room
- Supply gas pressure reduction station with custody transfer metering and gas heater
- Selection and supply of gas fired generator sets (gas turbines, reciprocating lean burn gas engines or other prime mover)

- Steam turbine generator sets for Combined Cycle generation - if selected as part of the package
- Combustion inlet air filtration equipment
- Combustion air cooling equipment if economics show improved overall performance
- Heat Recovery Steam Generators (HRSG) for generation of steam
- Exhaust Heat Recovery Units for generation of hot fluid to supply energy to the Gas Conditioning Plant from the exhaust heat of the gas engines, if they are the selected technology for power generation
- Air cooled cooling equipment for steam condensers and prime mover cooling
- Cooling tower(s) if feasible
- Gas ductwork and exhaust stacks
- Water treatment plant with storage for chemical, treated water and waste disposal system
- Testing laboratory with necessary equipment and chemicals for plant water testing
- Auxiliary equipment – lifting and maintenance equipment
- Auxiliary diesel engine and generator for black start and emergency operation
- Compressors for plant and instrument air and reticulation system
- Fire fighting and alarming system
- Potable and fire water reticulation system
- Liquid waste and sanitary waste disposal system
- Spare parts for the first two years of operation
- Training of operators
- Provision of Operation and Maintenance services for first life cycle of plant
- Provision of accommodation and housing for the Contractor's staff and Sub-contractors during construction and commissioning (alternatively, accommodation may be found in Sheberghan at the discretion of the Contractor)

1.2.3 ELECTRICAL WORKS

- High voltage electrical supply and distribution
- Low voltage electrical reticulation on site for plant, lighting, pumps, fans etc.
- DC supply system for plant and switchgear.
- Earthing
- High voltage switchrooms, switchgear, metering, switchyard, export transformers, reticulation to nearby HV substation
- Two 110kV line bays at Sheberghan Substation, including all HV equipment and extension to busbars

- Repair of existing overhead 110 kV transmission line from Sheberghan substation to Mazar-e-Sharif

1.2.4 CONTROL AND INSTRUMENTATION WORKS

- All field measurements and instrumentation required to safely and efficiently control and monitor the plant
- Engine (or Turbine) control system for unit control
- Distributed Control System (DCS) for data acquisition, regulatory process control, operator interface, process data storage and retrieval, and communication
- Programmable Logic Controllers (PLC) for equipment interface and sequential control
- SCADA system interface for remote monitoring and control
- Communications equipment for internal and external communication
- Telephone system for voice communication

1.2.5 STUDIES

Engineering studies, calculations and analysis to ensure good system design at the detailed engineering stage. The result of these studies shall be submitted to the Owner's Representative for review and approval.

The studies shall include, but not be limited to, the studies listed below and other studies that may be required by the Owner's Representative at the detailed engineering stage, which in the opinion of the Owner's Representative will be necessary to confirm adequate system design.

- HAZOP Studies
  - HAZARD identification
  - Hazard and operability studies for the plant
- Mechanical and Process
  - Calculations required meeting statutory approval requirement for all of the equipment to ASME/ ANSI standards including pressure vessels and piping
  - Sizing and optimization calculations for all items of plant
  - Performance calculations for all items of plant
  - Calculations and /or studies to demonstrate waste water, fluids, lubricants, solids and human waste removal in accordance with World Bank Standards
  - Calculations and /or studies to demonstrate air emissions from the prime mover exhausts are in compliance with World Bank standards
- Electrical
  - Sizing calculations for all items of plant
  - Earthing system studies
  - Fault level studies
- Civil and Structural

  - Soils investigation
  - Site seismicity assessment
  - Drainage design
  - Foundation design and analysis
  - Structural and seismic design and analysis

No work shall proceed without the approval of these studies, including drawings and calculations and analysis, by the Owner's Representative.

1.2.6 BALANCE OF WORKS

- Communication with and coordination with all parties including the Power Plant Contractor, the Owner's Representative and local authorities
- Operation and maintenance training for the Owner's staff
- Manufacturing and works inspections and testing
- Supply of all consumables required for erection, commissioning, testing and operation from after successfully finishing tests on completion including initial charges of all lubricating oils, greases, indicating lamps, filters, chemicals etc, for the first year of operation
- Plant inspections and tests on completion prior to taking over
- All permits and consents required under local law, with assistance from the Owner
- Statutory Approvals and inspections as required by the specification
- Operating and maintenance manuals for all systems and equipment
- Commissioning plans, commissioning reports on completion, showing sign off's
- Reports and documents and as built drawings on completion of the works for record purposes
- Submissions to the Owner's Representative for approval of all detailed drawings, calculations, studies and analyses required for sizing, designing and determining the performance etc of all works included in the contract scope
- Independent design verification of the following:
  - Pressure vessel design
  - Pipe stress analysis
  - Seismic design

1.2.7 WORK NOT INCLUDED

The following items of work are excluded from the contract scope:

- Supply of fuel gas, raw water for testing and commissioning
- Work associated with the through the fence Gas Conditioning Plant

1.3 TERMINAL POINTS AND INTERFACES

It shall be the Contractor's responsibility to ensure that the plant matches and integrates with the existing Gerquduq gas gathering system and gas processing plant in terms of item and system performance, physical dimensions and chemical composition. The Contractor shall cooperate fully with the Owner to ensure that the plant matches and integrates with the gas gathering and gas conditioning in terms of technical interfaces and also overall project schedule, commissioning and operation.

All termination works, except those specifically excluded in the Contract, shall be the responsibility of the Contractor. The Contractor shall liaise via the Owner's Representative with the different Afghanistan Government Departments to coordinate the completing of any tie-ins or termination work.

The termination and interfacing points of the Contractor's scope of work are:

1.3.1 MECHANICAL

- Gas
  - Gas will be supplied to the Gas Pressure Reduction Station from the Gas Conditioning Plant. The interface point shall be the eastern boundary fence between the two plants.
- Water
  - Raw water for the Power Plant shall be supplied from the Gerquduq Service Water Pumps. The interface point shall be the eastern boundary fence between the two plants.
- Thermal Energy
  - The Power Plant shall provide 15MW of thermal energy to the Gas Conditioning Plant for amine regeneration. The energy may be provided as either hot water at 140°C, or steam, depending on the preferred option offered by Power Plant Contractor. The Gas Conditioning Plant will be configured to receive the agreed option.

The interface point shall be the eastern boundary fence between the two plants.

- Wastewater
  - Soakage pit to grade
  - Drains from the Power Plant to the Gas Conditioning Plant treatment plants as shown on the preliminary piping and instrumentation diagrams (P&IDs)
- Fire Water System
  - Connection to existing ring main (two places) for fire water ring main

Flare System

  - Relieved gas from the Pressure Reduction Station and prime mover gas trains and various other relief valves are to be reticulated together and taken to the Gas Conditioning Plant flare. The interface point shall be the eastern boundary fence between the two plants.

1.3.2 ELECTRICAL

- 400 V switchboard No 1 at Power Plant for the Gas Conditioning Plant, estimated load capacity 500kW

- 400 V switchboard No 2 at Power Plant for the Gas Conditioning Plant, estimated load capacity 500kW
- 400 V Essential switchboard at Power Plant for the fire pump supply, estimated load capacity 50kW
- Bay 1, 110 kV busbars at DABM Sheberghan substation
- Bay 2, 110 kV busbars at DABM Sheberghan substation
- Earthing to Gas Conditioning Plant and substation
- Protection

1.3.3 CONTROL AND INSTRUMENTATION

- To Gas Conditioning Plant fire alarm system
- Between Power Plant control room and Gas Conditioning Plant control room

1.3.4 COMMUNICATIONS

- Communications interface panel at the Sheberghan substation
- Communications interface panel at the Power Plant
- Local interface for telephone and fax links to the PSTN
- To remote control

1.3.5 CIVIL AND STRUCTURAL

- Stormwater
  - Building drains to soakholes
  - Valved chemical bunds to soak pit
- Effluent
  - Disposal field downstream of septic tank
  - Process drains
  - Oily water collection and separation
  - Soak pit
- Site works
  - Connection to existing road systems
  - Perimeter of Contractor’s site

1.4 DEFINITIONS

1.4.1 DEFINITION OF TERMS

ABBREVIATIONS AND ACRONYMS

AEC	Afghanistan Engineering Consultants

AEAI	Advanced Engineering Associates International, Inc
ADB	Asian Development Bank
DABM	Da Afghanistan Breshna Moassesa (Afghanistan Electricity Enterprise)
GoA	Government of Afghanistan
IDOE	Independent Department of Environment
IEE	Initial Environmental Examination
KfW	Kreditanstalt fur Wiederaufban
Maunsell	Maunsell Ltd
MEW	Ministry of Energy and Water
MMI	Ministry of Mines and Industries
NGO	Non-governmental organization
T&D	Transmission and distribution
SoW	Statement of work
UNAIMS	United Nations Afghanistan Information Management Service
UNDP	United Nations Development Program
UNEP	United Nations Environment Program
WB	World Bank

ELECTRICAL TERMINOLOGY

V	volt	(unit of voltage)
kV	kilovolt	(unit of active power)
kW	kilowatt	(1,000 watts)
MW	megawatt	(1,000 kW)
Wh	watt-hour	(unit of energy)
kWh	kilowatt-hour	(1,000 Wh)
MWh	megawatt-hour	(1,000 kWh)
GWh	gigawatt-hour	(1,000 MWh)
TWh	terawatt-hour	(1,000 GWh)
VA	volt-ampere	(unit of apparent power)
kVA	kilovolt-ampere	(1,000 VA)
MVA	megavolt-ampere	(1,000 kVA)
VAr	volt-ampere reactive	(unit of reactive power)
Transmission system	35 kV, 110 kV or 220 kV line supplying grid substations	
MV	Medium voltage—3.3 kV, 6 kV, 10 kV, 15 kV or 20 kV lines supplying distribution substations	
LV	Low voltage—400/230 V distribution and service lines	
Load Factor	Ratio of average power demand to maximum power demand	
Electrical Losses	Difference between energy delivered and energy sent out	
Grid Substation	Substation with primary voltage of 110 kV or 220 kV	
Distribution Substation	Substation with secondary voltage of 400/230 V	

CONTROL SYSTEM TERMINOLOGY

AGC	Automatic generation control
C&A	Control and automation

DCS	Distributed control system
DP	Differential pressure
EMS	Energy management system
ESD	Emergency shutdown
Ethernet	A type of networking technology for local area networks
Fieldbus	Local instrumentation network used in field
GPS	Global positioning system
HMI	Human machine interface
I/O	Input/Output
IED	Intelligent electronic device
IPF	Instrumented protective function
IPS	Instrumented protective system
LAN	Local area network
LCD	Liquid crystal display
MOS	Manual override switch
NLDC	National Load Dispatch Center
NTP	Network time protocol
OPC	Object linking and embedding for process control
OPGW	Optical ground wire
PABX	Private automatic branch exchange
Profibus	Local instrumentation network used in field
PSTN	Public switched telephone network
RTU	Remote Terminal Unit
SDH	Synchronous digital hierarchy
SER	Sequence of events recorder
SIL	Safety integrity level
SOE	Sequence of events
TCP/IP	Communication protocol
WAN	Wide area network

GAS AND POWER SYSTEM TERMINOLOGY

AGC	Afghan Gas Corporation
amsl	Above mean sea level
Bar g	Pressure bar gauge
bcm	Billion cubic meters
CI	Compression ignition
CO	Carbon monoxide
CO_2	Carbon dioxide
CCGE	Combined cycle gas engine
CCGT	Combined cycle gas turbine
DEA	Diethanolamine
DEG	Diethylene glycol
ºC	Degrees Centigrade
GE	Gas engine
GJ	Gigajoule
GJ/y	Gigajoule per year

GT	Gas turbine
H_2O	Water
H_2S	Hydrogen sulfide
Heat Rate	Fuel consumption kJ/kWh
HFO	Heavy fuel oil
HHV	High heating value (gross heating value of the gas)
HPHW	High pressure hot water
IC	Internal combustion
kg/s	kilograms per second
kJ/kg	Enthalpy kilojoules per kilogram
kJ/kWh	Kilojoules per kilowatt hour
kWe	Kilowatt electrical
kWt	Kilowatt thermal
Lean Burn	Air to fuel operating range fuel lean of stoichiometric (gives high levels of O_2 in exhaust)
LHV	Low heating value (net heating value of the gas)
MDEA	Methyldiethanolamine
MEA	Monoethanolamine
Nm^3	Normal cubic meter (0 ºC, 101.325 kPa)
NGLs	Natural gas liquids
NOx	Oxides of nitrogen
NSCR	Non selective catalytic reduction (removes NOx, CO and HC but only on rich burn equipment)
OCGT	Open cycle gas turbine
PM	Particulate matter
Rich Burn	Air to fuel operating range fuel near stoichiometric (gives little or no excess O_2 in exhaust)
Scrubbing	Stripping a particular gas from a larger volume stream
scm	Standard cubic meter (15 ºC, 101.325 kPa)
SCR	Selective catalytic reduction (can be used for NOx reduction)
Sour Gas	Contains H_2S greater than 5.7 mg/m^3
Sweet Gas	Contains H_{2S} less than 5.7 mg/m^3
SO_2	Sulfur dioxide (oxidizes to give SO_3)
SO_3	Sulfur trioxide (reacts with H_2O to give H_2SO_4, Sulfuric acid)
TEG	Triethylene glycol
TOC	Total organic compounds
v/v	Percentage by volume

1.4.2 UNITS OF MEASUREMENT

Except as listed below, all units of measurement and symbols shall conform to the SI units for basic and derived units or names of units, unless otherwise agreed by the Owner's Representative.

1.5 DRAWINGS AND DATA

1.5.1 GENERAL

Specification and drawings to be read in conjunction with the Technical Specification are included in the Appendices.

1.5.2 DRAWINGS AND DATA TO BE PROVIDED

Following the award of the Contract, the Contractor shall prepare and provide to the Owner's Representative for review and approval, the Contract schedule showing critical path, all drawings, schedules, spares lists, calculations, documents, data and information necessary for the proper supervision by the Owner's Representative of the work involved and to provide a detailed and comprehensive record of the works.

The extent of these submittals shall include but not be limited to those specified, and shall be sufficiently comprehensive to establish that all parts and procedures to be used in performing the works comply with the objective of the Contract and with the requirements for installation, operation and maintenance.

The Owner's Representative shall have the right to require the Contractor to submit such additional information as may reasonably be required.

All drawings and documents prepared by the Contractor or its Subcontractors for this Contract shall bear an approved contract reference and title block.

All documentation, whether letters or drawings, shall show the project title and an identification number and shall be on ISO standard A-size sheets with the normal maximum size of drawing being A2 size.

The Owner's Representative will not normally be required to receive copies of detailed manufacturing drawings, but the Contractors shall make these available to the Owner's Representative when so requested.

All drawings shall be to scale and fully detailed and dimensioned. The materials of construction of each part shall be indicated. All drawings submitted shall be prepared in accordance with the standards specified. Each drawing shall be clearly stamped to indicate the applicable status, e.g., "For Tender," "Preliminary," "For Information," "For Approval," "For Construction," and "As-built."

Electrical schematic and wiring diagrams shall clearly show terminal blocks, terminal information, incoming and outgoing cables and the location of the remote end of such cables. Circuit diagrams of all electrical equipment including printed circuit boards shall be provided sufficient for comprehensive fault finding.

1.5.3 SUBMISSION AND APPROVAL

The Contractor shall submit six copies of each drawing to the Owner's Representative for approval.

If the Owner's Representative is satisfied with the drawing, one copy will be returned to the Contractor marked "Approved". If the Owner's Representative is not satisfied with some minor aspect of the drawing, it will be marked "Provisional Approval" and returned with comments upon it or in an attached letter. The Contractor may proceed with work according to other parts of the drawing. The drawing shall be revised, marked as a new revision and resubmitted for approval. Any drawing "Not Approved" will be so marked and returned to the Contractor with comments.

Revised drawings shall have indicated on them the nature of the change, the reason for the revision and the location of the revision.

When submitting drawings for approval, including any prepared by a Subcontractor, the Contractor shall certify that it has fully examined such drawings and that they comply with the requirements of the Contract.

The Owner's Representative's comments on these drawings and data shall be resolved by the Contractor and returned to the Owner's Representative within four weeks from the date of the Owner's Representative's comments.

Approval of a drawing by the Owner's Representative shall in no way relieve the Contractor of its responsibilities under the Contract.

On receipt of approval from the Owner's Representative, the Contractor shall arrange for the "revision column" of the drawings to be marked "approved by Owner's Representative on (date)", and forward four copies to the Owner's Representative for the Owner's use.

Any work done before the review of the drawings and data shall be at the Contractor's risk and any necessary design changes to comply with the requirements and objectives of the Contract shall be made at no additional cost to the Owner, or delay to the Project.

1.5.4 DRAWINGS AND DATA TO BE SUBMITTED

After Contract Award, but prior to Plant erection and installation commencing on Site, the Contractor shall submit to the Owner's Representative for review and approval the following drawings, data and comments:

- General specifications covering the type and design of all principal components of the Plant
- Materials records fully identified by referencing the appropriate standard of material, specification number and grade of each size
- An itemized list of all special tools that the Contractor recommends shall be required for maintenance and repair of equipment
- Field erection drawings detailing the location, installation and connection of all major plant items not permanently installed at the manufacturer's works. Each item of plant to be field assembled shall have the same identification characters, both upon the drawings, and upon the item of plant itself.
- Calculations for all flow elements. Information shall include data for both design and operating conditions. Pressure drops of the elements shall also be included.
- Results of studies itemized earlier
- Any other information required by the Owner's Representative

The Contractor shall submit detailed start-up and commissioning procedures for all equipment and selected erection procedures as requested.

The Owner's Representative will not necessarily examine in detail all submittals forwarded by the Contractor and may require submittals to be subject to the Owner's Representative's review or regard them as for information and record purposes.

The Contractor shall be responsible for any discrepancies, errors, or omission on the drawings and other particulars supplied whether or not such drawings and particulars have been review by the Owner's Representative.

The Owner's Representative will require the Contractor to make any changes to the drawings and data which may be necessary, in the opinion of the Owner's Representative, to make the Works conform to the intent of the Contract until full acceptance of the equipment by the Owner.

1.5.5 DATA AND DRAWINGS TO BE SUBMITTED WITHIN ONE MONTH

Within one month of the Contract Award the Contractor shall submit the following:

- Contract program on a Gantt Chart with critical paths identified
- Overall layout and general arrangement of all major plant areas
- A basis of works design to describe concisely the requirements, design basis, work scope and method for each major portion of the works
- Three copies of detailed calculations expanding the philosophy of the basis of design. Calculations shall include concise statements on the reasoning behind the design decisions.

All computer printouts shall be bound into an appropriate binder. Input data shall be verified and documentation shall be provided to show that the data evaluated in the calculations has been specifically used by the program to produce the final computer output.

The Contractor shall also provide:

- Foundation/civil drawings providing information for the civil works and building design for entire plant
- Complete list of all major plant items and equipment to be supplied together with the name of the manufacturer or subcontractor, country of origin, and shipping date
- Complete and detailed process and control diagrams of all plant and piping systems, i.e., piping and instrumentation type drawings following international best practice
- Instrument lists, functional logic diagrams for control, alarm and sequence interlocks
- Preliminary dynamic and steady state response data for all process flows
- Drawing list summarizing all existing and proposed drawings of principal items intended for submission to the Owner's Representative by the Contractor, together with the submission dates
- Schedule of all AC and DC electrical power loads
- Schedule of cooling water and compressed air requirements

1.5.6 DATA AND DRAWINGS TO BE SUBMITTED WITHIN SIX MONTHS

Within six months of the Contract Award, the Contractor shall submit the following:

- Piping layout drawings
- Block cable diagrams and diagrams of connections for all plant items, marshalling boxes and control panels
- Electrical schematic diagrams, including power, control, indication, protection and alarms
- Detailed general arrangement and construction drawings for all major plant items
- All welding procedures (both at Site and during manufacture)

1.5.9 CONTRACT DRAWINGS

After approval of the “as-built” drawings the Contractor shall submit, for final record purposes, sets of all approved drawings as follows:

- 1 set of AutoCad (latest version) drawing files
- 3 sets of A3 size paper prints bound into albums

These sets of drawings shall be submitted as a single submission to the Owner’s Representative.

1.5.10 ERECTION DRAWINGS

It is the Contractor’s responsibility to ensure that field erection personnel have in their possession the latest available erection drawings of the type and quantity needed to perform the Works.

1.5.11 USE OF CONTRACTOR’S DRAWINGS

The Contractor’s drawings may be used by the Owner for operating, maintaining, adjusting, repairing and modifying the Works.

If certain documents contain special design or technical information of the Contractor, which is considered proprietary, such documents or information contained therein shall not be disclosed to a third party without the prior consent of the Contractor, which consent shall not be unreasonable withheld.

The foregoing shall apply only to such documents, identified by the Contractor by a special stamp or legend, the wording of which shall be agreed between the Contractor and the Owner’s Representative, including the period of time for which the restriction applies.

1.6 CODES AND STANDARDS

1.6.1 GENERAL

The codes, standards and specifications referenced in the Contract Agreement shall include addenda, amendments and errata and shall govern in all cases where references thereto are made. In case of conflict between these codes (or standards or specifications) and other requirements specified in the Contract Agreement, the latter shall govern to the extent of such difference.

The code, standard or specification applied in each case shall be the latest revision adopted and published at the signed date of Contract. Any conflict between standards shall be referred to the Owner’s Representative who will determine which standard shall govern.

Except where specifically excluded, alternative internationally accepted codes and standards such as ISO, AS, or DIN may be acceptable.

After the Contract Award, the Owner’s Representative may request that the Contractor submit selected alternative codes and standards for review and approval. Such codes and standards shall be submitted in the English language. No purchasing, fabrication or manufacture shall proceed until the codes and standards are approved in writing by the Owner’s Representative.

If standards other than those listed herein are accepted, the Contractor shall submit an index tabulating the accepted codes against the applicable code listed herein. Differences between the codes shall be summarized in a remarks column. It shall be the Contractor’s responsibility to demonstrate to the Owner’s satisfaction that the proposed codes and standards to be used are equal or better than those referenced below.

1.6.2 REFERENCED CODES AND STANDARDS

The full name of the codes and standards referenced in this document are shown in Tables 1 and 2.

TABLE 1 ACCEPTABLE CODING BODY OR INSTITUTE

ITEM	CODE	FULL NAME OF CODING BODY OR INSTITUTE
1	AASHTO	Association of American State Highway and Transportation Officials
2	ACI	American Concrete Institute
3	ADC	Air Diffusion Council
4	AGMA	American Gear Manufacturer's Association
5	AISC	American Institute of Steel
6	AISI	American Iron and Steel Institute
7	AMCA	Air Moving and Conditioning Association
8	ANSI	American National Standards Institute, Inc.
9	API	American Petroleum Institute
10	ARI	Air Conditioning and Refrigeration Institute
11	AS	Australian Standard
12	ASHRAE	American Society of Heating, Refrigerating and Air Conditioning Engineer, Inc.
13	ASME	American Society of Mechanical Engineers
14	ASNT	American Society for Non-destructive Testing
15	ASTM	American Society for Testing and Materials
16	AWS	American Welding Society
17	CEMA	Conveyor Equipment Manufacturers Association
18	FM	Factory Mutual Insurance Co.
19	HEI	Heat Exchange Institute
20	IEC	International Electrotechnical Commission
21	IEEE	Institute of Electrical and Electronics Engineers
22	IGCI	Industrial Gas Cleaning Institute
23	ISA	Instrument Society of America
24	ISO	International Organization for Standardization
25	NBS	National Bureau of Standards, USA
26	NACE	National Association of Corrosion Engineers
27	NEMA	National Electrical Manufacturers Association
28	NFPA	National Fire Protection Association
29	OSHA	Occupational Safety and Health Administration
30	PTC	ASME Power Test Code
31	SMACNA	Sheet Metal and Air Conditioning Contractors National Association Inc.
32	UBC	Uniform Building Code
33	UL	Underwriters Laboratories, Inc.
34	VDE	VDE Testing and Certification Institute

TABLE 2 SPECIFIC ACCEPTABLE CODES

ITEM	CODE	CODE TITLE
1	API 612	Steam Turbines and referenced Standards
2	API 615	Sound Control of Mechanical Equipment for Refinery Services
3	API 616	Gas Turbines for Refinery Service and referenced Standards
4	ASME VIII	Rules for construction of pressure vessels
5	ASME B13.1	Identification of process pipework
6	ASME B16.5	Pipe fittings and flanges
7	ASME B31.3	Process piping

TABLE 2 SPECIFIC ACCEPTABLE CODES

ITEM	CODE	CODE TITLE
8	ASHRAE 52-76	Particle Filters for General Ventilation and Air Conditioning purposes
9	ASTM A416	Standard Specification for Steel Strand, Uncoated Seven-Wire for Pre-stressed Concrete
10	ASTM A615	Deformed and Plain Billet-Steel Bars for Concrete Reinforcement
11	AATM B228	Standard Specification for Concentric-Lay-Stranded Copper-Clad Steel Conductors
12	ASTM B416-98	Standard Specification for Concentric-Lay-Stranded Aluminum-Clad Steel Conductors
13	ASTM C33	Standard Specification for Concrete Aggregates
14	ASTM C 150	Standard Specification for Portland Cement
15	ASTM C494	Standard Specification for Chemical Admixtures for Concrete
16	EN 50028	Electrical apparatus for potentially explosive atmospheres; encapsulation 'm'
17	IEC 598	Luminaries
18	IEC 826	Transmission Lines
19	IEC 60034	Rotating electrical machines (including Parts 34-1 to 34-26)
20	IEC 60044	Current transformers and voltage transformers
21	IEC 60051	Direct acting indicating analog electrical measuring instruments and their accessories
22	IEC 60060	High voltage test techniques
23	IEC 60071	Insulation co-ordination
24	IEC 60071-1	Insulation co-ordination
25	IEC 60072 and 60072A	Dimensions and output ratings for rotating machines
26	IEC 60076 – 1 to 11	Power Transformers
27	IEC 60079	Electrical Apparatus for Explosive Gas Atmospheres
28	IEC 60079-10	Electrical apparatus for explosive gas atmosphere: Part 10: Classification of hazardous areas
29	IEC 60079-11	Electrical apparatus for explosive gas atmosphere: Part 11 - Construction and test of intrinsically safe and associated apparatus
30	IEC 60079-14	Electrical apparatus for explosive gas atmosphere: Part 14: Electrical installations in hazardous areas (other than mines)
31	IEC 60085	Thermal evaluation and classification of electrical insulation
32	IEC 60099	Surge arresters
33	IEC 60186	Voltage transformers
34	IEC 60214	Tap Changers
35	IEC 60243	Recommended methods of tests for electric strength of solid insulating materials at power frequencies
36	IEC 60255	Electrical relays
37	IEC 60255-5	Insulation tests for electrical relays
38	IEC 60255-21	Vibration, shock, bump and seismic requirements
39	IEC 60255-25	EMI emission tests
40	IEC 60297	Dimensions of mechanical structures of the 482.6 mm (19 in) series
41	IEC 60305	Insulators for overhead lines with a nominal voltage above 1000 V - Ceramic or glass insulator units for AC systems - Characteristics of insulator units of the cap and pin type
42	IEC 60353	Line traps for an ac power system
43	IEC 60437	Radio interference test on high-voltage insulators
44	IEC 60439	Low voltage switchgear and control gear assemblies
45	IEC 60529	Degrees of protection provided by enclosures (IP code)
46	IEC 60617	Graphical symbols for diagrams
47	IEC 60654-1	Industrial-process measurement and control equipment; operating conditions, Part 1: Climatic conditions
48	IEC 60654-3	Operating conditions for industrial-process measurement and control equipment: Part 3: Mechanical influences

TABLE 2 SPECIFIC ACCEPTABLE CODES

ITEM	CODE	CODE TITLE
49	IEC 60654-4	Operating conditions for industrial-process measurement and control equipment: Part 4: Corrosive and erosive influences
50	IEC 60688	Electrical measuring transducers for converting AC electrical quantities to analog or digital signals
51	IEC 60694	Common specifications for high voltage switchgear and control gear standards
52	IEC 60751	Industrial Platinum resistance thermometer sensors
53	IEC 60794	Optical Fiber Cables
54	IEC 60801	Electromagnetic compatibility for industrial process measurement and control equipment
55	IEC 60826	Design criteria of overhead transmission lines
56	IEC 60848	GRAFCET specification language for sequential function charts
57	IEC 60870-5-101	Telecontrol equipment and systems - Transmission protocols
58	IEC 60870-5-104	Telecontrol equipment and systems - Transmission protocols - Network access for IEC 60870-5-101 using standard transport profiles
59	IEC 60871	Shunt capacitors for AC power systems having a rated voltage above 660 V
60	IEC 60888	Zinc-coated steel wires for stranded conductors
61	IEC 60889	Hard-drawn aluminum wire for overhead line conductors
62	IEC 60902	Industrial process measurement and control terms and definitions
63	IEC 60947	Common clauses for high-voltage switchgear and control gear standards and control gear standards
64	IEC 60947-2	Low-voltage switchgear and control gear Part 2: Circuit breakers
65	IEC 61000-4	EMC immunity requirements
66	IEC 61000-5-2	Electromagnetic compatibility (EMC), Part 5 - Mitigation methods and installation guidelines, Section 2 - Earthing and cabling
67	IEC 61024	Protection of Structures Against Lightning
68	IEC 61089	Round wire concentric lay overhead electrical stranded conductors
69	IEC 61131	Programmable controllers
70	IEC 61158-1 to -6	Standards for Fieldbus for use in industrial control systems
71	IEC 61166	High-voltage alternating current circuit-breakers - Guide for seismic qualification of high-voltage alternating current circuit-breakers
72	IEC 61508	Functional safety of electrical/electronic/programmable electronic safety-related systems
73	IEC 61511	Functional safety – Safety instrumented systems for the process industry sector
74	EN 61779-1, -5	Electrical apparatus for the detection and measurement of flammable gases. Parts 1 - 5
75	IEC 62271	High-voltage switchgear and control gear
76	IEC 62271-100	High-voltage AC circuit breakers
77	IEC 62271-200	AC metal-enclosed switchgear and control gear for rated voltages above 1 kV and up to and incl. 52 kV
78	IEEE 80	Guide for Safety in AC Substation Grounding
79	IEEE 484	Recommended Practice for Installation Design and Implementation of Vented Lead-Acid Batteries for Stationary Applications
80	IEEE 485	Recommended Practice for Sizing Lead-Acid Batteries for Stationary Applications
81	IEEE 802.3	Ethernet LAN
82	IEEE 1138	Construction of Composite Fiber Optic Overhead Ground Wire (OPGW) for Use on Electric Utility Power Lines
83	IEEE 1222-2003	Standard for All-Dielectric Self-Supporting Fiber Optic Cable
84	ISO/DIS 9241-3	Ergonomic requirements for office work with visual display terminals (VDTs): Part 3: Visual display requirements

TABLE 2 SPECIFIC ACCEPTABLE CODES

ITEM	CODE	CODE TITLE
85	ISO/DIS 9241-5	Ergonomic requirements for office work with visual display terminals (VDTs): Part 5: Workstation layout and postural requirements
86	ISO 10816-3:1998	Mechanical vibration -- Evaluation of machine vibration by measurements on non-rotating parts
87	ISO/DIS 11064-3	Ergonomic design of control centers: Part 3: Control room layout
88	NEMA LI-1:1998	Industrial Laminates (unclad) Standard
89	UL 698	Safety Standard for Electrical Industrial control equipment for use in hazardous (classified) locations, Class I, Groups A, B, C, and D and Class II, Groups E, F, and G
90	UL 886	Outlet boxes and fittings for use in hazardous (classified) locations
91	UL 913	Intrinsically safe apparatus and associated apparatus for use in class I, II and III, division I, hazardous (classified) locations
92	ITU-R	International Telecommunications Union - Radiocommunication Sector
93	ITU-T	International Telecommunications Union - Telecommunications Standardization Sector
94	TIA/EIA RS-598A	Color coding of Fiber Optic Cables

The design shall be in ISO metric units.

Conflicts between criteria and /or local standards shall be brought to the attention of the Owner's Representative for resolution. In such instances, all available information shall be furnished to the Owner's Representative for approval.

All equipment shall be rated and designed for 45 ºC ambient temperatures and where located outside shall be designed to accommodate intense solar radiation heating effects.

1.7 QUALITY ASSURANCE REQUIREMENTS

1.7.1 QUALITY SYSTEM

The Contractor and its major Sub-Contractors shall have a certified Quality System that meets the requirements of ISO 9000 or equivalent.

After Contract Award, a mutually agreed upon Quality Plan containing the applicable procedures, design verification plans and inspection test plans required for the works shall be developed and shall be included as part of the Contract requirements.

1.7.2 CONTRACT QUALITY PLAN

After Contract award, and prior to the start of any subsequent design, manufacture or installation work, the Contractor shall prepare a mutually agreed preliminary Quality Plan for the entire Contract.

The preliminary Quality Plan shall address all quality issues including, but not necessarily limited to, the following:

- Responsibilities and authorities
- Document control
- Design verifications
- Subcontractor assessment and control
- Calibration requirements
- Traceability

- Non-conformance control
- Inspection and test plans
- Internal audits
- Records

Where it is not appropriate to include detailed procedures or inspection and test plants in the preliminary Quality Plan, the need for them and the responsibility and timetable for producing them shall be identified in the document.

Two copies of the detailed Quality Plan for the Contract shall be submitted to the Owner's Representative for review and comment no later than eight weeks after Commencements Date and at least four weeks before the start of manufacture or installation. Prior to the start of any work affected by the procedures, the Contractor shall revise all or any portion of the documentation, as required by the Owner's Representative and shall submit the amended documents for approval.

The Owner reserves the right to examine any procedures referred to in the Quality Plan and to audit the Contractor against the requirements of the Quality Plan at any time.

The Contractor shall submit for approval by the Owner's Representative the measures to be taken for storage and maintenance for Plant and Contractor's Equipment prior to installation, as well as for the period between the completion of the installation and the time that the Plant and Contractor's Equipment are placed in service.

The Contractor shall provide a Site Quality Control program including requirements for Site Quality Control surveillance.

1.7.3 OVERALL INSPECTION AND TEST PLAN

Within three months after Contract Award or four months prior to the start of fabrication, whichever is the earlier, the Contractor shall submit to the Owner's Representative an Inspection and Test Plan that shall include pertinent manufacture and inspection operations. The Owner's Representative shall select one or more of these points as a mandatory hold point for surveillance.

The Contractor shall give the Owner's Representative at least fourteen working days prior notice in writing to the date on, and the place at which any Plant shall reach a mandatory hold point or shall be ready for independent inspection and testing. Unless the Owner's Representative shall advise the Contractor not to proceed with the inspection and testing prior to seven days before the date the Contractor has stated in its notice, the Contractor may proceed and any inspection and tests shall be deemed to have been made in the Owner's Representative's presence, and the Contractor shall forthwith forward to the Owner's Representative duly certified copies of the inspection and test results.

Within seven days of receiving these results, the Owner's Representative shall advise the Contractor either that it may proceed past the mandatory hold point or what steps it must take to meet its obligations.

1.7.4 QUALITY SYSTEM

The Contractor shall be responsible for the review, comment and acceptance of the Quality System of its Sub-Contractors. In addition, the Contractor shall be responsible for its Sub-Contractor's work. The Contractor shall submit to the Owner's Representative a list of any, or all, of the work to be sub-contracted. At the request of the Owner's Representative, details of the Sub-Contractor's Quality System and procedures shall be submitted in accordance with Clause 1.6.2 above.

1.7.5 QUALITY RECORDS

Three copies of all appropriate quality records, as specified by the technical specifications and as required by applicable codes and standards shall be submitted to the Owner's Representative for review and acceptability prior to, or concurrent with, shipment or as otherwise agreed to by special arrangement with the Owner's Representative.

1.7.6 IDENTIFICATION AND TRACEABILITY

The Contractor shall implement a system that ensures traceability of all critical parts and components of the supplied plant and equipment and the associated Quality Records. The extent of traceability required shall be agreed upon with the Owner's Representative.

1.8 INSPECTION AND TESTING

1.8.1 GENERAL REQUIREMENTS

The plant shall undergo inspection and testing during manufacture, erection and on completion for verification that the components satisfy all the requirements as specified and defined and documented. All plant inspection and testing shall be conducted in accordance with the applicable codes, standards and particular requirements specified in this document. The Contractor shall consider the provisions specified as minimum requirements and also use its own experience in determining requirements for additional inspection and testing that it considers necessary.

The approval of the Owner's Representative or the passing of any inspection or testing shall not prejudice the right of the Owner to reject the plant if it does not comply with the Specification when erected or give complete satisfaction in service. The Contractor's costs associated with all inspection and testing shall be borne by the Contractor.

1.8.2 BASIC INSPECTION AND TESTING DURING MANUFACTURE

As far as possible, the quality of materials, workmanship and performance of all plant items to be provided under this Contract shall be inspected at the places of manufacture to verify compliance with the requirements of the specification and to meet the Contractor's Quality System requirements. Inspection shall be carried out by the Contractor's own Inspectors and by the Owner's Representative if the Owner requires that right to be exercised.

All important forgings and castings shall be examined at the manufacturer's factory.

1.8.3 WORKS TESTING

In addition to the Contractor's standard quality control and production tests, works testing shall be carried out as specified in this technical specification.

Works testing shall include electrical, mechanical and hydraulic tests in accordance with the standards specified or other approved standard and, in addition, any tests called for by the Owner's Representative to ensure that the plant fulfils the requirements of the Specification. For items of plant not covered by any standard specifically mentioned in this Specification, the tests shall be agreed with the Owner's Representative.

The electric motors used for driving equipment during a test shall, where possible, be the service motor for that item. In all cases, performance certificates for the motors used shall be available for examination by the Owner's Representative and shall be included in the certification produced for the item tested.

- Access and supporting steel arrangement drawings
- Schedules of consumable items, lubricants and chemicals
- Schedules of cable block diagrams and itemized cable schedule
- Detailed drawings of the turbine hall including services
- Full manufacturer's data sheet on every type of device, equipment, or module the Contractor proposes to utilize in the Control and Instrumentation System including computer hardware and software
- Functional loop control diagrams
- Schedules of instruments, valves, input and output signals (analog and binary), using the approved system of Plant item referencing and nomenclature
- Earth system study results
- Sizing calculations for all items of plant
- Performance calculations for all main items of plant
- Design and analysis covering structures, foundation and seismic aspects of the Works
- Detailed manufacturing drawings for all parts which may require replacing during the life of the Plant

1.5.7 REVISION OF CONTRACTOR'S DRAWINGS AT SITE

During the erection and commissioning period it may be necessary, on the approval of the Owner's Representative, to make revisions to already approved construction drawings. In such case the Contractor shall provide to the Owner's Representative at site without delay two marked up prints detailing any revision made. Normal revisions of these drawings shall then be made and issued to the Owner's Representative as described earlier.

1.5.8 AS-BUILT DRAWINGS

Following the installation of the equipment, the Contractor shall revise its drawings to show the "As-built" status. The Contractor shall send three copies of the "As-built" drawings to the Owner's Representative for approval. The following drawings shall be "As-built":

- Process flow diagrams
- Process and control diagrams
- Underground services
- General arrangements where a major change has occurred
- All electrical drawings
- All instrumentation drawings
- All boiler pressure parts drawings as required by Statutory Authorities
- All pressure vessel drawings as required by Statutory Authorities

All rotating units shall be statically and dynamically balanced. A check shall be made of the balance of items that undergo over-speed tests.

The vibration characteristics of rotating units shall be measured during performance tests. The standards to be achieved shall, on request, be subject to agreement by the Owner's Representative. The information obtained shall be passed to Operations and Maintenance staff.

1.8.4 ERECTION TESTING

During erection of the Plant, the Owner's Representative shall have access to any part of the Works for inspecting the progress of the Works and checking accuracy and compliance of items with the specification.

As erection of the Plant proceeds, testing shall be carried out in accordance with the applicable codes and standards and the requirements of the Contract.

During erection, the Contractor shall perform all inspection checks and tests in the presence of the Owner's Representative at suitable intervals in order to prove the orderly execution of the Works in accordance with the program.

Unless otherwise specified, the Contractor's costs of all such inspection checks and tests at Site and of the Works and any changes associated with it shall be included in the Contract Price.

1.8.5 TESTS ON COMPLETION

At the completion of erection and prior to putting the plant into service, the tests listed below shall be carried out in the sequence given for each section of the Works. The successful performance and completion of all the tests taken together shall constitute completion of all required Tests on Completion. On satisfactory completion of Tests on Completion, a Take-over Certificate shall be issued to the Contractor. The Contractor will continue to operate the plant as described elsewhere in the document.

- Preliminary Site Tests/ Pre-commissioning Tests
- Functional Tests/Commissioning Tests
- Trial Run
- Thirty-day Reliability Test Run
- Performance Tests

1.8.6 PRELIMINARY SITE TESTS / PRE-COMMISSIONING TESTS

After completion of erection and before putting into operation, each item of plant and its auxiliaries shall be thoroughly cleaned by the Contractor and then inspected under the surveillance of the Owner's Representative for correctness and completeness of installation and acceptability for placing into operation.

The Contractor shall demonstrate to the Owner that each item of plant can safely undertake the next stage of testing and operation. Pre-commissioning tests shall include appropriate inspections and functional tests to demonstrate this.

The Contractor shall prepare comprehensive instructions and check lists for the inspection, calibration and testing of all equipment. These shall be referenced in the commissioning plan. The results shall be bound and presented in the commissioning manual and handed over to the Owner to present a record of the complete plant in its 'as new' condition. Inspection and review of test results by the Owner shall in no way relieve the Contractor of responsibility under the terms of the Contract. The following shall be included as a minimum:

- “Yellow lining” of all process and instrumentation diagrams
- Visual inspection of all plant, pipework, and equipment
- Calibration of all instruments
- Stroke all valves, adjust limit switches
- Functional testing of all control circuits and control sequences
- “Yellow lining” of all control and power circuits
- Insulation, resistance and continuity checks of all power and control circuits
- Alignment, rotational checks and vibration measurements for all rotational equipment
- Functional checks of all safety equipment
- Final tightening of all fasteners, union, joints, terminations etc.
- Bump tests of all electric motors
- Final fill of all lubricants, coolants etc.
- Check all equipment manufacturer’s installation and pre-commissioning instructions

1.8.7 MECHANICAL PLANT

Tests to be carried out on mechanical plant shall include, but not be limited to the following:

- Hydrostatic pressure test as called up in ASME VIII, 31.1 and 31.3
- Flushing of all systems with temporary strainers and check for final fill of lubricants, chemicals or other fluids

1.8.8 MOTORS

The following tests shall be included:

- Dry-out
- Insulation resistance measurement
- High voltage dielectric tests
- Phase rotation check

1.8.9 TRANSFORMERS

1.8.9.1 Pre-commissioning Tests

Once the site transformers have been tested in the works and delivered with oil, the following tests shall be carried out with all components and fittings in place and with the transformer filled with oil. During tests, tapped windings shall be on their principal tapping unless otherwise required. Results to be compared to the works test values.

- Winding resistance on all taps
- Polarity
- Voltage ratio
- Tap Changer Continuity on all taps
- Oil tests
  - An oil sample shall be taken, and its breakdown voltage and moisture content shall be recorded.
  - Immediately prior to energizing, the following tests shall be performed on the oil:
- Electric breakdown strength, in kV/mm

- Moisture content, in ppm
- Insulation Resistance
- The insulation resistance shall be recorded with a 5000 V megger on each winding as follows:
  - Primary – secondary + earth
  - Secondary – primary + earth
  - Primary + secondary – earth
  - The record of insulation resistance test results shall include ambient air and winding (or oil) temperatures.

1.8.9.2 Pre-commissioning Inspections

- Each transformer tank shall be checked to ensure it is directly earthed to the station earth grid.
- The neutral point of the star connected winding shall be checked to ensure it is correctly earthed.
- The minimum clearances of HV conductors connected to the transformer shall be checked.
- All main connection terminals and clamps including bushing tap cap screws shall be checked for tightness.
- All maximum temperature indicators shall be reset.
- All Buchholz relays, radiators and bushings shall be bled.
- All separate oil containing compartments shall be checked to ensure they are full of oil.
- Alarm and/or trip circuits on pressure relief devices and gas detectors, if fitted, shall be checked.
- All protection associated with the transformer shall be checked to ensure it is in service.
- All radiator valves are to be checked to ensure they are in the open position.
- The transformer fastenings shall be checked.

1.8.10 LIVE TESTS

- Off-load
  - The off-load tap-changer shall be operated throughout its range and the voltage levels checked against tap-changer indications.
  - The no-load magnetizing current shall be measured.
  - The temperature shall be measured on all units after livening until steady state conditions have been reached.
- On-load
  - Current shall be measured in the earthing conductor or the star point of any star connected winding.

1.8.11 SWITCHGEAR AND PROTECTION

Tests to be carried out on the switchgear and protection shall include, but not be limited to the following:

- Primary injection tests on current transformers to prove ratio and polarity
- Secondary injection tests to prove relay and meter calibration
- High potential tests on busbars, including metal enclosed bus and switchgear
- Resistance measurements of joints in bus with Ductar
- Mechanical tests
- Point-to-point wiring continuity checks on all low voltage circuits to confirm that the final connections agree with the panel wiring diagrams
- Meggering at the appropriate voltage of all high voltage circuits
- Energizing of all low voltage circuits
- Check of the operation of all meters, relays, instruments, alarms and trips
- Load settings in of all protection relays in line with the settings to be agreed with the Owner
- Check print out against input
- Final stability tests on protection systems
- Functional testing of all equipment

1.8.12 EARTHING SYSTEM

Conductivity tests of the system and earthing resistance tests shall be performed at points throughout the system before any electrical equipment is energized from the permanent source of power.

1.8.13 CABLES AND ACCESSORIES

- Line-to-line and line-to-earth insulation tests shall be performed on all cables. Cables shall not be connected to equipment when being tested. Continuity tests shall be performed on all cable conductors and shields.
- All cables shall withstand the AC test voltages specified by the appropriate Standards.
- 11 kV cables shall have low frequency AC tests.

1.8.14 INSTRUMENTATION, PROTECTION, METERING AND CONTROL SYSTEMS

The following tests shall be carried out:

- Calibration of control loops (additional calibration checks on the metering and indicating equipment may be carried out by the Owner)
- A final check on the overall accuracy of the metering and indication system

The control system tests shall be in a similar format to the Factory Acceptance Tests, including:

- Every control and indication function shall be operated to ensure it operates correctly.

- All analog values shall be tested for accuracy and the production of print-outs.
- All processing of analog quantities shall be exercised.
- The printing of all logs, alarms, and trips shall be tested.
- Human machine interface (HMI) screen outputs shall be checked.
- Communication tests shall demonstrate the proper operation of all aspects of the equipment's communication capability.
- All start-up, shut-down, and power failure functions shall be exercised.
- The operation of all specialized test equipment shall be tested.
- All spare plug-in units shall also be tested by inserting them in place of working units. All wired chassis not fully equipped shall be tested by inserting working units.

Such other tests as may be considered necessary by the Owner to prove that the equipment, as erected, meets the requirements of the Specification.

1.8.15 FUNCTIONAL TESTS / COMMISSIONING TESTS

After satisfactory completion of the preliminary site tests, and before the plant is put into commercial operation, the Contractor shall conduct functional tests to demonstrate to the Owner’s Representative that each item of plant is capable of performing correctly the function for which it was specified.

Prior to commencing the functional tests, the Contractor shall submit its proposed test program to the Owner’s Representative for approval. The activities included in the test program shall form part of the Inspection and Test Plan required under this contract. The Owner’s Representative may ask for additional tests and/or for an extension or improvement of the test program if the Contractor is unable to show that the test program proposed is sufficient to prove the functionality of the plant being tested. The test run, reliability run and performance tests shall be included as scheduled activities in the test program.

The Contractor shall inform the Owner’s Representative when the respective systems are complete, to allow:

High electrical pressure hot water supplies to and from gas conditioning.

First synchronizing of the power plant generator.

1.8.16 COMMISSIONING REQUIREMENTS

Commissioning tests shall not commence until completion of all relevant pre-commissioning tests, inspections, checks and necessary adjustments to demonstrate adequately that the equipment as erected on site complies with the specification requirements and is entirely ready for commissioning.

During commissioning and performance tests the Owner will provide, as far as system conditions permit, all necessary loadings or unloadings of the generating units. Except under emergency conditions where the safety of the plant or personnel is involved, any load change affecting the electrical supply system shall only be permitted with prior approval.

1.8.16.1 Individual and Subsystem Tests

After erection and completion of the pre-operational checks and tests all equipment having moving parts, all electrical apparatus and all equipment subject to pressure shall be given a test

operation. The test operation shall be carried out in accordance with the equipment manufacturer's recommendations and shall include all the tests specified herein.

The test operation of all individual equipment and subsystems shall extend over a period of time as required to reveal any equipment weaknesses in bearings, cooling systems, heat exchangers, and other such components, or any performance deficiencies which may later handicap the operation of main systems and the complete plant. All rotating equipment shall be checked for overheating, noise, vibration and any other conditions which would be detrimental to the operation of the Works.

1.8.16.2 System Tests

All systems shall be checked, operated, and tested after each individual item and subsystem has completed a trial operation.

All functional and operational testing of protective interlocking, automatic controls, instrumentation, alarm systems, and all other field testing of the main systems shall be completed before the systems are started.

1.8.16.3 Unit Tests

Before the plant is synchronized and load testing begins permission shall be obtained from the Owner’s Representative. Permission will only be given when all system operational checks have been completed to the satisfaction of Owner’s Representative.

The following tests shall be performed during operation:

- Run turbines to synchronous speed, check overspeed trips, safety devices, protective gear and bearing lubrication and temperatures.
- Vibration measurements
- Dry out generator
- Electrical tests
- Phase sequence and balance of terminal voltage
- Shaft voltage measurement
- Performance tests to establish effectiveness of all compensating or over-riding regulator signals and performance of manual follow up control
- Excitation tests, including brushless exciter rectifier fuse failure detectors
- Synchronize and perform unit operation tests including control loop tuning and station parasitic load island operation
- Tests to demonstrate that the governor system dead band is within specified limits
- Dynamic response tests for step error signals at selected loadings
- Excitation system performance demonstration of control under load changes of AVR firing circuits, including dynamic response tests for step error signals at selected generator loadings and open circuit
- Shutdown for inspection and adjustment including lubricating oil change and bearing inspection
- Incremental loading to nominal rating, check on bearing and winding temperature rises

- Control loop stability tests
- Load rejection tests (25%, 50%, 75% and 100% unit load)
- During the unit operation tests the Contractor shall demonstrate the start-up and shut-down reliability by performing at least four consecutive trouble-free starts, synchronizing, loading to full load and controlled shut downs from the Control System. All automatic devices shall function normally on each occasion.

1.8.17 FUNCTIONAL TESTS

The functional tests required shall include the following minimum requirements and any particular requirements included in the specification for individual items of plant:

1.8.17.1 Mechanical Systems

- Checks on the operation of all control and isolating valves, gas and air dampers both locally and from the control room
- Checks on the operation of all fans; check to ascertain compliance with noise and vibration specifications
- Tests on the running of pumps in conjunction with any controlling pressure, temperature or level devices; checks to ascertain compliance with noise and vibration specifications
- Checks on the functional performance of lubricating oil and cooling water systems
- Redundant equipment tests
- Safety valve setting and functionality
- Loading from start-up to design point
- Checks on operation of all variable speed drives throughout their respective ranges
- Checks on operation of gas firing systems, valves and all safety features
- Checks on correct functioning of all safety features, burner management and the flame failure system, alarms, trips and interlocks under operating conditions as far as equipment permits, or by simulating trip functions

1.8.17.2 Electrical Systems

- Megger and functional test of plant electrical supplies
- Megger tests of cable and motors
- Measurement of large motor starting and operating currents
- Protection testing in accordance with the Specifications
- Communications systems testing

1.8.17.3 Control Equipment

- Calibration tests of all analog measuring loops, including remote indications
- Testing of all transmitters
- Testing of all control cabling in the field

- Functional testing of the distributed control system (DCS)
- Functional testing of instrumented protective system (IPS)
- Functional testing of PLCs
- Functional testing of remote control of drives, circuit breakers, solenoid valves, actuators, etc.
- Testing of all inter-locks
- Testing of all alarms

Other functional tests shall be conducted if required by the Owner's Representative to establish that plant items are in accordance with the requirements of the Specifications.

Before the commencements of the Reliability Test Run the Contractor shall demonstrate to the Owner's Representative that the Plant is capable of stable and continuous operation.

Detailed safety system check procedures shall be provided to the Owner Operations and Maintenance staff for future routine testing purposes.

1.8.18 TRIAL RUN

At the completion of the functional tests, each section of the Works shall operate continuously for a minimum of 24 hours as a trial run. The operating conditions to be used for the trial runs shall be established by the Owner's Representative.

The Contractor shall be permitted to start and stop the Plant as required to make adjustments or for remedial work. If the Plant is shut down for any reason, then the trial shall be recommenced accordingly.

1.8.19 RELIABILITY TEST RUN

When the Contractor has completed the tests and trials outlined above and have notified the Owner's Representative that the Plant is ready for on-line testing, the Plant shall be put into operation, either continuously or intermittently, as may be more convenient to meet operational constraints, under the direction of the Contractor's Representative.

Prior to commencing the Reliability Test Run, any additional instrumentation required for performance testing of the Plant shall be installed and checked. The Reliability Test Run shall be commenced within two days of the Contractor notifying the Owner's Representative that the Plant is ready. In the event that the Gas Conditioning Plant is unable to supply adequate quantities of sweet dry gas at the nominal required gas flow rate at this time, the test will be postponed until the Gas Conditioning Plant is ready. The Contractor must be flexible in this regard and accommodate this.

For the Reliability Test Run the Plant shall be operated at a minimum of 90% of nameplate output, corrected for ambient temperature, for a continuous period of seven days.

Should any failure occur during the Reliability Test Run due to, or arising from, faulty design, materials or workmanship or any reason within the Contractor's control, the Reliability Test Run period of seven days is to recommence for the whole Power Plant after the Contractor has remedied the cause of the failure.

The onus of proving that any failure is not due to faulty design, material, workmanship or beyond its control shall lie with the Contractor.

1.8.20 PERFORMANCE TESTS

1.8.20.1 General

As soon as practicable after the start of the Reliability Test Run, official Performance Tests shall be carried out which may repeat the tests carried out at the manufacturer's factory and any other tests the Owner's Representative may require in order to determine that the plant is in accordance with the Specification and Guarantees. Prior to these Performance Tests the Contractor shall submit, for approval, a detailed procedure covering the testing to be undertaken and the methods to be employed. The test procedure shall also detail areas of responsibility and the items which specifically require preparation and agreement before the tests can be carried out.

The Contractor shall provide at least 24 hours prior to the commencement of a particular Performance Test, the test sheet for approve by the Owner's Representative. The test sheet shall specify the type of test, location, duration, analysis procedure, sampling point (if applicable) and timing of the test.

1.8.20.2 Scope

The Contractor shall conduct Performance Tests that shall include all individual items of equipment, complete systems and sub-systems covered under this Contract.

It is the Contractor's responsibility to carry out all Performance Tests in this Contract. The Plant at Site shall be operated under the supervision of the Contractor by the Owner's operators. Trainings obligations are described in later sections. The Contractor shall provide all necessary sampling points (with safe access), equipment and instrumentation required for testing.

Performance Tests on each item of Plant shall be conducted in accordance with the applicable ASME PTC and all detailed requirements of the technical specifications for that item of Plant, or as otherwise agreed with the Owner's Representative.

Performance Test duration shall be for a minimum of eight hours.

Performance Testing shall include the following:

- Gross and net capacity
- Gross and net heat rate
- Fuel flow consumption
- Parasitic loads
- Gas quality
- Chemical consumptions
- Noise measurements
- Air emissions measurements
- Wastewater measurements
- Operation of safety shutdown systems
- High pressure hot water (HPHW) supplies to the Gas Conditioning Plant
- Lubricating oil consumption

Any tests carried out by the Contractor to other codes or standards shall only be with the prior approval of the Owner's Representative.

1.8.20.3 Test Procedures

The Contractor shall submit detailed test procedures to the Owner's Representative at least two months before the scheduled test date.

These tests procedures shall include but not be limited to:

- The sequence of the tests to be conducted
- The time duration of each test at each load
- List of instruments which shall be used for each test. The list shall designate which instruments are:
  - Special test instruments
  - Certified instruments—to be certified before and after each test
  - Check instruments
  - Owner supplied instruments
- All formulae, calculations, conversion factors, curves, correction curves, etc. to be used in conducting the test and the calculations of the test results
- Sample test reports or data sheet forms that shall be used for the test

The Contractor shall provide sufficient and skilled supervisory staff and service engineers to perform all tests.

The Contractor shall provide all necessary instrument work for the tests, such as calibration of instrument, recording, calculation and other related works.

The Contractor must repeat any test, if in the opinion of the Owner's Representative the test was not performed properly.

1.8.20.4 Test Equipment

The Contractor shall provide and install all necessary test points, instruments, fittings and other equipment and consumables except fuel, auxiliary power and water required for conducting the performance tests.

Correction factors for variations of test conditions from the specific design condition shall be as stated by the Contractor in its Tender.

1.8.20.5 Calculation of Test Results

The Contractor shall compute the results and shall forward to the Owner's Representative three copies of a report embodying the results of the tests and all relevant data and information concerning the tests within two weeks of the completion of any tests.

1.8.20.6 Power, Heat Rate and Chemicals Consumption

During the tests the main operating parameters may vary from the specified values used to calculate the guarantees. To make adjustment for these deviations correction curves as contained in the Contract shall be used.

The tests shall be carried out as follows:

- All test instrumentation shall be calibrated.
- In order to reach a stable operating point for the tests, the plant may be run for a period of time at the load at which the test is to be made, before the test commences. A request for the performance test runs, stating duration and load shall be made in writing to the Owner three days before the official test.
- During the tests the entire plant shall run under automatic control, and will be operated from the central control room. All electrical and control cabinets shall be locked and

sealed. All control and logic variables shall be recorded and set to the values that are to be used for long-term plant operation.

- If the as-measured gas flow is less than the specified maximum, then the power plant may be adjusted at the Contractor's option to increase the total gas flow up to the maximum permitted, and thus increase the gas processing flow, and the test repeated. This is providing the Gas Conditioning Plant supply system is capable of providing the specified maximum flow to the boundary.

1.8.20.7 Test Results

Results from the performance tests shall be compared with the performance guarantees in the Contract. If after opportunity for correction, as allowed by the Contract, the performance of the Power Plant remains outside the allowable measurement tolerance of the guaranteed value then the Owner shall have the right to reject the Power Plant.

Should the performance be outside the guaranteed value (after allowance of the measurement uncertainty), the Owner shall have the right to reject the Power Plant or plant item or system as allowed by the Contract.

1.8.20.8 Allowable Measurement Uncertainty

The allowable uncertainty is 1.0% of the guaranteed figures. This shall allow for the cumulative effect of all errors in instrumentation and instrument reading.

1.8.20.9 Duration of Test and Frequency of Readings

The duration of the test and the frequency of readings of instruments shall be followed as prescribed hereunder.

Duration of each test:	8 hours at constant power
Differential pressure or flow measurements:	Every half minute
Pressure measurements:	Every five minutes
Temperature measurements:	Every five minutes
Power measurements:	Every minute
pH and boiler feed water quality measurements	Sufficient samples shall be obtained and analyses performed to demonstrate that the dosing control complies with the Owner's requirements
Exhaust emissions	Every minute
Level measurements	At the start and finish of each test

1.8.20.10 Instrumentation

General

Before performance tests commence, all instrumentation used in the tests shall be calibrated to the satisfaction of Owner and the Contractor. To ensure that test readings are accurate, all critical instrumentation shall be re-checked immediately after each test.

The performance test report, which shall be prepared by the Contractor, shall describe the test instrumentation and include supporting evidence of calibration tests.

Instruments to Be Used

The Power Plant's instruments and apparatus shall be fully used and outputs recorded in the test. All supplementary instrumentation required for the performance tests shall be supplied by the Contractor. Sufficient instrumentation shall be included in the Power Plant's installed instrumentation to complete all performance tests, except as noted below:

- Additional data logging facilities if specially required for the performance tests
- Gas quality

The following vital instruments directly affect the test result:

- *Measurement of gas flow*—For the performance tests, the steam and gas flows shall be measured in accordance with PTC 46, class 1, including PTC 6 requirements referenced in PTC 46. Flow element calibration curves or data used for measuring the flow shall be approved and available before commissioning commences. The flow measuring equipment shall be part of the permanent works.
- *Measurement of power*—Net power consumed by the Power Plant during the tests shall be measured by the metering supplied by the Contractor. The CTs and VTs are to be supplied with calibration certificates.
- *Measurement of gas pressures*—Pressure measurements shall be made using pressure gauges calibrated with a dead weight pressure tester.
- *Measurement of chemical flows*—Continuous chemical flows shall be verified by tank level changes over 8-hour intervals. No chemicals or fluids are to be added to the measuring tanks during the testing procedure.

1.8.20.11 Analysis of Data

The arithmetic averages of the instrument readings shall be corrected to take into account the correction curves of each instrument. Exceptional readings which depart widely from the normal range may be discarded in the calculation of arithmetic averages.

Correction curves contained in the Contract shall be applied to the actual performance test data to determine performance at guarantee conditions. The corrections curves for calorific value and main cooling system inlet air temperature, atmospheric pressure and humidity shall allow correction of the performance test results to the guarantee conditions for heat rate.

All calculations shall be completed and the agreement of all parties obtained on site. A full test report of the results of the tests shall be prepared by the Contractor.

1.8.20.12 Noise Measurements

The noise levels shall be tested during both performance tests in accordance with International standards and compared against Owner's requirements.

1.8.21 DEFECTS NOTIFICATION PERIOD

Defects Notification Period shall be 24 months and shall commence from issue of the Taking-Over Certificate. The Contractor is responsible for organization of and costs for all repairs, labor and parts for all breakages in this time period.

1.9 PLANT IDENTIFICATION SYSTEM

1.9.1 GENERAL

This general technical requirement defines the requirements, conventions and guideline for assigning numbers and titles to the equipment that shall be numbered.

The Contractor shall prepare a comprehensive Plant Identification schedule systems showing the name and number of each item of Plant and its respective arrangement drawing number, and add any additional information necessary to fully identify the Plant. The Plant Identification Schedule shall be subject to the Owner's Representative's approval and be in accordance with the internationally based KKS (Kraftwerk-Kennzeichen-System) drawings numbering system.

All Plant in the designated system shall be assigned equipment numbers.

The same equipment number shall not be applied to more than one item of equipment.

Equipment numbers shall be depicted on the process and control diagrams, physical piping and general arrangement drawings, specification, system or functional diagrams, electrical drawings, schedules, civil and structural drawings, etc.

1.9.2 NAMEPLATES AND LABELS

The Contractor shall supply all labels, nameplates, instruction and warning plates necessary for the identification and safe operation of the Plant. All instructions shall be in both English and Dari language and the size of the lettering shall be to the approval of the Owner's Representative.

The inscriptions on all plates, except warning plates, shall be engraved with black filled lettering either at site or in the manufacturer's works after the equipment designations have been finalized. Approved, temporary labeling shall be provided until this is done.

Warning plates shall be manufactured from stainless steel with a matt or satin finish, engraved with red lettering, and located in a position which shall afford maximum personnel safety.

Inscriptions shall be to the approval of the Owner's Representative and where applicable shall include the Plant nomenclature in addition to the alpha-numeric Plant designation code as described above.

The plates and labels shall be non-deteriorating and non-warping under site conditions. Stainless steel shall be used on outdoor equipment. An approved plastic laminate or suitable equivalent may be used for individual component labels inside panels and desks. Where applicable, plates and labels shall have a white background to the inscriptions.

All labels, nameplates, instruction and warning plates shall be securely fixed to items of plant with stainless steel rivets, suitably plated self tapping screws or other approved means. The use of adhesives shall not be permitted.

All equipment within panels and desks shall be individually identified by satin or matt finish stainless steel labels or laminated plastic labels where approved.

Each circuit breaker panel, control panel, relay panel and the like shall have a circuit designation label mounted at both front and rear. Corridor type panels shall additionally have circuit designation labels within the panels. The functions of each relay, control, indicting and alarms device, fuse, etc., shall be indicated.

All unfired pressure vessels and lifting tackle shall have permanently attached to them or stamped on them, in a conspicuous position, a data plate giving such details as the design code,

design parameters, test parameters, date of test etc, in accordance with ASME VIII and to the approval of the Owner's Representative and the independent inspecting agency.

Pipework systems shall be designed in accordance with ANSI B31.1 however identified in accordance with ANSI A13.1.

Each valve shall be fitted with a stainless steel nameplate indicating the valve service and reference number in accordance with the valve schedules as approved by the Owner's Representative. The color of the valve nameplate engraving shall correspond to the service of the pipe work in accordance with the requirements of appropriate standards.

Where possible, valve nameplates shall be circular and fitted under the hand wheel nut. On check valves and small valves the Contractor may provide rectangular nameplates fitted to brackets on the valve or attached to a wall or steelwork in a convenient position adjacent to the valve.

Size of plate and lettering shall be to the approval of the Owner's Representative.

1.9.3 PLANT LABELING OF CONTROL VALVES

A plant identification label, displaying the valve tag number is to be provided for each valve (modulating and on-off). Labels shall be attached to a wall or steelwork in a convenient position adjacent to the valve.

1.10 MANUALS

1.10.1 MANUALS—GENERAL

The Contractor shall provide 12 sets of well-structured, comprehensive, and coordinated manuals to fully describe all aspects of design, commissioning, operation and maintenance of all plant supplied under the Contract including tools and testing equipment. The format of the document shall be agreed with the Owner's Representative before the Contractor proceeds to assemble the draft manuals.

WITH THE EXCEPTION OF STANDARD MANUFACTURERS' BROCHURES, ALL DOCUMENTATION SHALL BE IN BOTH ENGLISH AND DARI LANGUAGE.

- Six copies of the first draft of the manuals shall be submitted to the Owner's Representative for review eight months before commercial operation of the Plant.
- Twelve copies of the final manual shall be submitted to the Owner's Representative four (4) months prior to the commencement of commercial operation, or at the end of the construction period, whichever is earlier.
- Full sets of As-built manuals shall be supplied within two months of completing performance testing.
- As a minimum, a complete stand alone manual shall be submitted for each item at the plant.
- The layout of the manual should, as far as possible, be consistent. Systems and plant shall be described in the same order in each section.
- Each section shall be divided into as many volumes as necessary for convenient handling and reference.
- All plant identification shall be by means of the description and numbering system specified in this Contract.

- The manual format shall be on standard metric A4 sheets. Drawings and schedules which are to be bound into the manual shall also be A4 or A3 folded to A4 sizes.
- The manuals shall include instructions only for the actual plant supplied and not for alternative or optional equipment. If generic documents are included the non applicable portion shall be crossed out.
- Parts shall be identified by the original manufacturer's part number.
- The Contractor shall also be responsible for supplying additional information or replacing information to keep the manual complete, accurate and up to date if field inspections of equipment indicate omissions or inaccuracy of the manuals.
- All manuals shall be submitted complete in durable binders expected to last over the life of the Plant and which facilitate addition or removal of information.

1.10.2 OPERATIONS MANUALS

The volume comprising the operations part of the manual should be laid out as follows:

- Preliminary pages including index and amendment record sheets
- Equipment identification asset list
- Process descriptions
- Process flow diagrams for all operational scenarios
- Heat and mass balance drawings
- Piping and instrumentation diagrams
- Recommended procedures for operation and instructions for commissioning, start-up, normal operation, shut down, standby, emergency (including loss of normal power) and fault conditions, and other information such as normal range of system variables, operating limit and hazardous conditions for all equipment and systems.
- Plant layout drawings
- General arrangement drawings
- Hazardous area drawings
- Escape route drawings
- Safety equipment location drawings
- Final performance and design data sheets and performance curves for all equipment
- Testing and checking requirements

1.10.3 MAINTENANCE MANUALS

The volume comprising the maintenance part of the manual should be laid out as follows:

- Preliminary pages including index and amendments record sheets
- List of names and addresses of liaison offices for all supplied Plants
- Preventive maintenance and inspection schedules for all plant and equipment covered by this Specification

- Lubrication schedule showing requirements and specifications for all equipment covered by this Specification and showing equivalent lubricants available in Afghanistan
- Recommended procedure for assembly and dismantling with associated tests and check-ups prior to returning equipment to service
- Detail construction and assembly drawings to complement assembly procedures mentioned above, including part lists and number for replacement ordering
- Setting and running clearances and tolerances
- Methods for trouble shooting
- Cleaning and conversation procedures
- Welding procedures
- NDT procedures
- Instrumentation calibration requirement and procedures
- The listing of all replacement parts and spare parts identifying the following:
  - Name of spare part
  - Identification number
  - Manufacturer’s drawing number
  - Installed quantities and spare quantities
  - Outline sketch diagram
  - Materials
  - Required period delivery
- Drawings showing recommended methods for maintenance for all equipment

1.10.4 DISTRIBUTED CONTROL SYSTEM MANUAL

The Contractor shall submit a manual describing the DCS software and hardware and include the following as a minimum:

- The manual shall include functional descriptions including intended use, capabilities, limitations, control logic diagrams, control set points and correction curves etc.
- The manual shall set out the procedure required to generate the system software.
- The software portion of the instruction manual shall describe the software provided with the system including the self diagnostics, operating system, the utility software and the application software. This shall also include reference, user and programming manuals for all software supplied.
- The hardware portion of the manual shall contain physical descriptions of system hardware, functional characteristics, capabilities, specifications, data sheets, and special characteristics. Assemblies and sub-assemblies shall have unique part numbers which shall be referenced in the documentation. This shall also include theory of operation and general overview of the system hardware furnished.

1.10.5 COMMISSIONING MANUAL

The Contractor shall submit a manual describing the commissioning and include the following independently signed and witnessed as a minimum:

- Commissioning plan
- Commissioning check sheets
- Assembled check sheets complete with signoffs
- Design verifications
- Material certificates
- Test certificates
- Independent test and inspection reports
- Radiography
- Welder identification and isometrics
- Hydro-test reports
- Loop check check-sheets
- Rotating equipment, static and dynamic check-sheets
- Punch list check-sheets and signoffs
- Pipe flush checklists
- Relief valve check sheets
- Underground piping and sewer checklists
- Calibration checklists
- Alignment checklists
- Concrete logs
- Grout logs
- Pour cards
- Electrical certificates

1.11 SPARE PARTS, TOOLS, TEST EQUIPMENT, AND CONSUMABLES

1.11.1 SPARE PARTS

The Contractor shall operate the plant for the duration of the O&M Contract. The Owner reserves the right to renew this Contract at the end of the first life cycle or first major overhaul. See Section 2.5 of this specification.

- Operations & Maintenance Contract Spares

  - The Operations and Maintenance (O&M) contract will include both breakdown and operational spare parts for the first year, after which the Owner will purchase and provide the spares.
  - The tender shall include a list of parts, as recommended by the manufacturer and Contractor, to be kept and stored at site to achieve the availability guarantees offered.
- Start-up and Commissioning Spares
  - The Contractor shall ensure that sufficient spare parts are available for use during testing and commissioning of the Plant. Any spares used by the Contractor during the testing and commissioning period shall be replaced by the Contractor at its own cost.
- Owner Spare Parts
  - The Owner will purchase spare parts for use following the completion of the first year of the O&M contract. The price for recommended spare parts provided in the tender shall be fixed and not subject to escalation for a period of three years after Taking-Over (as defined in FIDIC) of the Plant.

All spares supplied shall be strictly interchangeable with the parts which they are intended to replace and shall be tested and packed for long storage under the climatic and atmospheric conditions prevailing at the Site.

Each spare part or component shall be clearly marked with the description, purpose and Plant designation code.

Any spare having a limited shelf life or requiring a special storage condition shall be separately identified.

If the Contractor's practice is to assign its own part numbers to parts purchased from other manufacturers, a part number list shall be furnished which provides a cross-reference between the Contractor's part number and the part number of the original supplier.

The Contractor shall include within its spare parts list those spares necessary to enable the Owner to carry out routine maintenance on every instrument as recommended by the manufacturer in its catalog.

1.11.2 TOOLS AND TEST EQUIPMENT

Any special tools and test equipment required to adjust, dismantle, test, or maintain any equipment furnished by the Contractor shall be provided by the Contractor. A list of the tools and test equipment to be provided shall be included in the tender.

Tools and test equipment shall be recommended for each part of the works grouped as follows:

- Instrumentation and control system equipment
- Medium and low voltage electrical equipment
- Each section of plant
- Each ancillary plant

The tools and test equipment shall not be used during erection and commissioning.

1.11.3 CONSUMABLES

The Contractor shall furnish a sufficient quantity of consumable parts and materials such as gaskets, seals, lubricants, hand-hole covers, computer paper, recorder charts, ink, chemicals etc.

during erection, testing, commissioning and through the first year of operation. These consumables shall not be quoted as spare parts furnished under this Contract.

The Contractor shall submit to the Owner's Representative at least three months prior to commissioning the Plant, a schedule of consumable items, listing the items and the quantities required per month of operation of the Power Plant.

A list of consumables shall be shown in the Tender.

The Contractor shall supply and maintain as a minimum, the quantities shown on the list.

At the end of the O&M Contract, the Contractor shall hand over to the Owner any of the materials shown on the list which remain unused.

All hardware which has a life of less than one year shall be replaced by new hardware by the Contractor at the time of Taking Over and shall be tested immediately prior to Taking Over.

1.12 PACKAGING AND STORAGE

1.12.1 GENERAL

The Contractor shall package all equipment and materials in such a manner as to ensure protection against damage and deterioration during shipment and storage, including local transportation, air and ocean freight, and site storage. Procedure and details shall be submitted to the Owner's Representative for review prior to start of shipment.

The Contractor shall provide necessary storage facilities such as a warehouse, protective covering etc. for the purpose of the proper site storage. Storage procedures shall be submitted to the Owner's Representative for approval.

1.12.2 INSTALLED PLANT

The Contractor shall protect all plant from deterioration, condensation, physical damage and vandalism.

The Contractor shall ensure that installed items are protected with the same level of protection accorded them while in storage.

Heaters shall be energized with temporary power and provided with external pilot lights to monitor the feeds. Dust contamination shall be avoided by suitable temporary coverings, with provisions for resealing on control boards and similar items.

Protection shall be provided by the Contractor for electrical cables in trays, ducts and risers and other electrical equipment when and where required, by means of fireproof covers or barriers to prevent damage from weld splatters, fires, water damage, falling debris, moving equipment, etc.

1.13 PERSONNEL AND TRAINING

1.13.1 PERSONNEL

The Owner will recruit and employ staff for the long term operation and maintenance of the Power Plant. The specified staff will be seconded to the Contractor for the duration of the training, commissioning, and O&M contract. The Contractor shall provide management, supervision, and training for the Owner's staff.

1.13.2 TRAINING

The objective of the training program is to train the Owner's staff in the operation and maintenance of all plant furnished under this Contract.

The Contractor shall provide training for the personnel in the operation and maintenance of the plant furnished prior to and during the first two years of the O&M Contract.

To ensure that training occurs in an orderly fashion, it is envisaged that a number of key personnel would travel to similar plants elsewhere in the world. Typically this would involve 12 man months of offshore training total for the power plant. An allowance shall be made in the tender for the Contractor to provide this training.

1.13.3 SITE TRAINING

All general staff will require site induction including:

- Generator operation experience and power plant scheduling and management
- High voltage switchyard operation and management experience—operational procedures and safety management
- Hazard identification
- Chemical spills
- Fires
- Emergency evacuation
- Security and safety

All maintenance and engineering staff will require site induction, plus further training including:

- Hot work
- Confined space
- High voltage equipment
- Pressurized hot water systems
- Computers
- Computer maintenance management system provided

1.13.4 PLANT OPERATORS

Plant operators will need to be trained in all aspects of the plant installed. This will best be achieved by specialist attention to individual items as necessary for each person at plant site and for a set of operators at the manufacturer's work site.

1.13.5 STRUCTURED TRAINING

The Contractor must execute a structured training program which uses practical and desk-based methods to:

- Provide for the transfer of knowledge and skills required to perform the required operation and maintenance activities.
- Demonstrate that the trainee has acquired the necessary skills and knowledge.

- Document that the Contractor has tested the trainee to the required level and certificate the trainee to operate and maintain the Plant.

The objectives of such a program must be to maximize learning and minimize maintenance and operational errors.

The Contractor shall submit, eight months before acceptance, a plan for training including scope and timing which shall allow the Owner to integrate the training into its operating and maintenance training plan.

The Contractor will provide rooms, furniture and all visual aids for on-site training.

The Contractor shall provide well organized training manuals (in English and Dari) for the trainees.

1.14 HAZOPS

1.14.1 GENERAL REQUIREMENTS

Prior to the commencements of site construction work the Contractor shall arrange for and carry out Hazards and Operability (HAZOP) reviews of Process and Control (P&C) Diagrams for all systems within the scope of the Contract, using OSHA Process Safety Management Standards.

1.14.2 PROCESS AND CONTROL HAZOP

The Contractor shall carry out the process and control HAZOP reviews at the Gerquduq site, and as a minimum the Contractor shall provide staff for the following reviews:

a) An independent chairperson familiar with the HAZOP procedures

b) The Contractor’s principal process mechanical design engineer for the development of the P&C Diagrams under review

c) The Contractor’s commissioning supervisor

d) The Contractor’s instrument and control engineer principally involved with the P&C Diagrams under review

e) A secretary to record action items arising from the reviews if this task is not undertaken by staff as in b), c), or d) above

The Contractor shall provide a program for the HAZOP meetings two weeks before the first review commences to ensure that the Owner’s employees can make arrangements to attend the meetings.

The Contractor shall record action items arising from the HAZOP meeting and provide copies of these action items to subsequent meetings.

Prior to commencement of construction work on site, the Contractor shall also provide the Owner’s Representative with written confirmation that the action items have been attended to.

1.14.3 ELECTRICAL POWER SYSTEMS HAZOP

The objective of the electrical and power systems HAZOP shall be to critically examine and investigate, systematically and critically, the overall fundamental architecture, concepts, philosophies and functionality of the electrical and power systems proposed for the project. The

results of this overview will propagate, effectively from inception of the design process, through all the design work and decisions.

The electrical systems HAZOP review shall take place at an early stage in the project, before detailed design commences in any discipline. It will be a companion review to the Control Hazards and Operability (CHAZOP) so that electrical control concepts are integrated with those of the CHAZOP. (The CHAZOP of computer-controlled programmable automation systems, including control and safety systems, gives a fundamental top-down overview covering the architecture and fundamental concepts and philosophies which the designers will follow throughout all phases of the design).

The electrical HAZOP does not cover details of the design of individual items. Such matters are covered in the HAZOP related to the detailed plant design when Process & Control (P&C) drawings and logic diagrams are available later in the project.

The electrical HAZOP shall be conducted in a similar manner to the P&C HAZOP and shall cover matters such as:

- Voltage levels and capacities required (DC and AC)
- Earthing systems requirements and implementation, including segregation of earthing of high voltage, distribution, and control/safety systems
- Sources of these electrical supplies
- Back-up and redundancy considerations
- Availability considerations, including risk analysis and fire protection
- Alleviation of the consequences of supply failures on all plant items
- Consideration of the effects of the different modes of failure, including:
  - Complete loss
  - Brown-out
  - Surge and sag of voltage
  - Electrical noise generated and absorbed, and spikes
- Electrical needs of the Plant (such as allowing for fault levels and volt drop under starting loads and UPS hold-up time periods)
- Requirements for instrumentation, indicating and signaling of status and condition for main supplies and for distribution equipment
- Standardization across the project
- Location and housing of plant to ensure its continuing reliability and safety

1.15 HEALTH AND SAFETY

1.15.1 HEALTH AND SAFETY REGULATIONS

The Contractor shall ensure that good practice procedures in accordance with the US Department of Labor Occupational Safety and Health Administration (OSHA) are observed by its own employees and those of its Subcontractors.

The Contractor's specified Safety Supervisor shall be responsible for all safety matters and shall liaise with the Owner's Representative.

1.15.2 CONTRACTOR'S RESPONSIBILITY

In addition to, or as part of the Contractor's obligation under Sub-Clause 1.14.1, the Contractor shall:

- Ensure that the Contractor's and Subcontractor's employees have the necessary skills, qualifications, and are supervised by trained personnel, to perform the Contract Works safely.
- Ensure that Contractor's and Subcontractor's employees are trained in and follow work practices and safety rules of the Gerquduq Site including completion of a safety induction course for every worker employed on the Contract Works.
- Audit the performance of Contractor's and Subcontractor's employees to ensure compliance to international safety standards and site requirements.
- Inform the Owner's Representative of health and safety hazards presented by the Contractor or Subcontractor's Works.
- Inform the Owner's Representative of health and safety hazards found by the Contractor or Subcontractors whilst undertaking the Works.
- Ensure that personal protection equipment and suitable clothing is supplied to protect the Contractor's or Subcontractor's employees from the hazards their work environment.
- Inform each Subcontractor of health and safety related hazards they may be exposed to and the controls in place to protect them, including hazards that may be created by other contractors.

1.16 STATUTORY REGULATIONS AND APPROVALS

The requirements for design approval, operation and inspection of such equipment in Afghanistan are set out in the ASME/ANSI Standards.

The Contractor shall be responsible for establishing the applicable requirements under the US Department of Labor OSHA standards for the Plant.

The Contractor shall be responsible for the following:

- Ascertaining the approval, inspection, documentation and design standard requirements
- Obtaining the necessary design verification and certification from an approval agency
- Coordinating and arranging for the required statutory inspections and testing from an approved agency
- Providing all the necessary documentation to meet the requirement of the agencies

The manufacture of any items requiring design verification shall not commence until the Contractor has received the necessary certification from the approving authority and evidence has been provided to the Owner's Representative of same.

The cost of such statutory approvals or services shall be included in the Tender.

2.0 PERFORMANCE AND OPERATING REQUIREMENTS

2.1 GENERAL

2.1.1 INTRODUCTION

The Contractor shall prepare a tender for a 100% design, build and commission of a Power Plant based upon the documents referenced in this technical specification. The 100% design shall provide all information needed for the construction of the new Sheberghan Gas Fired Power Plant.

The proposed Power Plant shall be natural gas fired and is to be designed to generate a total of 100 MWe nominal output at site conditions. This total output shall be measured at the high voltage side of the main step-up transformer.

The technology to be employed shall be gas engines in open cycle or combined cycle, or Combined Cycle Gas and Steam Turbines. The technology is to be selected by the Contractor and detailed in the Tender. Selection of the successful Contractor and technology to be employed will be based on criteria set out in this specification. Essentially, the Owner is seeking a plant returning the least cost per unit of energy delivered over the lifetime of the plant. To help drive the most economic generation philosophy the Contractor shall also be obligated to enter into an O&M contract renewable through the first major overhaul (first life cycle) for the plant.

The site is owned by the Government of Afghanistan (GoA) and the Power Plant is to be owned by the Ministry of Energy and Water (MEW).

The site is approximately 15 km south-southeast of Sheberghan, Afghanistan and located at 36º 33'10.00N and 65º 43' 03.00E near the top of a local rise in the ground at an elevation of 477 m amsl. Adjacent to the proposed site on the east boundary is a proposed Gas Conditioning Plant to be constructed under a different specification. The proposed site is a “greenfield” site.

Across the road to the North is the existing DABM substation to be upgraded to transmit power from the new Sheberghan Power Plant. The upgrade work required to the substation is part of this Contract.

The existing grid presently operates at 110 kV from the DABM substation. The existing transmission line to Mazar-e-Shariff from Sheberghan is presently not in service with approximately 30 km of conductor missing from the120 km long line. There is expected to be damage to insulators and supporting towers. The route of the line is some distance from the road running between Sheberghan and Mazar-e-Sharifand has not been walked to fully evaluate the nature of the reinstatement work. The reinstatement of the 30 km of the 110 kV transmission line is part of this Contract.

This specification covers design, selection, supply and commissioning of the following items, not all of which are applicable, depending upon the technology selected by the Contractor:

- Site preparation
- Foundations
- Buildings to house generating plant, storage of spares, workshop, and control room

- Plant roads, security fencing, guard house and landscaping
- Supply gas pressure reduction station with custody transfer metering and gas heater
- Selection and supply of gas fired generator sets (gas turbines, reciprocating lean burn gas engines or other prime mover)
- Steam turbine generator sets for Combined Cycle generation—if selected as part of the package
- Combustion inlet air filtration equipment
- Combustion air cooling equipment if economics show improved overall performance
- Exhaust heat recovery steam generators (HRSGs) for generation of steam
- Exhaust heat recovery units attached to the exhaust stacks of the gas engines to generate hot fluid (140ºC) for use in the Gas Conditioning Plant
- Air cooled cooling equipment for steam condensers and prime mover cooling
- Cooling tower(s) if feasible
- Gas compressors or gas reducing stations, as required
- Gas ductwork and exhaust stacks
- Instrumentation, controls, and SCADA
- High voltage switchrooms, switchgear, metering, switchyard, export transformers, reticulation to nearby HV substation, and connection to HV bus
- Electrical reticulation on site—low voltage—lighting, pumps, fans, etc.
- Water treatment plant with storage for chemical, treated water and waste disposal system
- Testing laboratory with necessary equipment and chemicals for plant water testing
- Auxiliary equipment—lifting and maintenance equipment
- Auxiliary gas fired start up boiler for steam turbine option
- Auxiliary diesel engine and generator for black start and emergency operation
- Compressors for plant and instrument air and reticulation system
- Fire fighting and alarming system
- Potable and fire water reticulation system
- Liquid waste and sanitary waste disposal system
- Spare parts and consumables for the first year of operation
- Special tools and test equipment
- Training of operators
- Provision of O&M services for first life cycle of the Plant
- Repairs to 110 kV overhead transmission cable to restore the transmission system to serviceable

- Provision of accommodation and housing for the Contractor's and Subcontractors' staff and during construction and commissioning (alternatively, accommodation may be found in Sheberghan at the discretion of the Contractor)

Standard Product: All material and equipment offered shall be a standard product of a manufacturer regularly engaged in the manufacture of the product and shall essentially duplicate items that have been in satisfactory use for at least two (2) years prior to tender opening.

2.1.2 OVERVIEW OF PROJECT OBJECTIVES

The overall project objective is as follows:

- Generation of power into the local grid as economically as possible under the project constraints.

2.2 PROJECT INPUTS

2.2.1 NATURAL GAS

The gas shall be from the adjacent new Gas Conditioning Plant at Gerquduq.

2.2.2 UNTREATED WATER

Existing plant service water pumps and ancillary equipment at the Gerquduq pump house will be re-commissioned under the Gas Conditioning Plant contract to provide water directly from the existing common storage tank to the Power Plant.

2.2.3 ELECTRICAL SUPPLIES

Electrical supplies for plant auxiliary loads shall be supplied at 400 V via two 11/0.415 kV auxiliary transformers, each transformer shall be connected to a separate section of the 11 kV bus. The 400 V switchboard shall be located in the Power Plant building.

2.3 PROJECT OUTPUTS

2.3.1 110KV POWER TO THE GRID

Power, of nominal 100 MWe, shall be taken at 110 kV at the switchyard main breakers, and be transmitted and interconnected to the existing Sheberghan DABM substation approximately 500 m away.

2.3.2 THERMAL ENERGY

The Gas Conditioning Plant shall be provided with thermal energy for amine regeneration, either steam or high pressure hot water and return the lower temperature high pressure hot water back to the Power Plant in a closed heat loop arrangement. The estimated load is 15 MWt.

2.3.3 ELECTRICAL SUPPLY

The Gas Conditioning Plant shall be provided with 400 v electrical supply, the estimated requirement is 500 kW.

The fire pumps shall be provided with 400 V electrical supply, the estimated requirement is 100 kW.

2.4 PERFORMANCE GUARANTEES

As well as acquiring a technically sound plant meeting the specification, it is the Owner's desire to operate the new Power Plant and its equipment to generate and export electric power at the lowest cost per kWh. These costs will be assessed on energy and water consumption costs and delivery figures provided by the Bidders in their tender, along with the costs of Ownership and Maintenance over the first life span of the Plant. Inflationary effects will not be factored for this evaluation as all potential Contractors are expected to face similar inflationary trends over the period.

Tenderers are to complete the performance data tables in the Schedule of Technical Data in Appendix 1, which will be used as a basis for performance guarantees.

These figures will be modified by the annual availability figures provided by the Tenderer in their tender for the whole of life cycle evaluation.

These figures will be used to modify the net heat rates on an annual basis for the whole of life cycle for the power plant on offer: If the power plant offered has different heat rates and degradation factors for different parts of the plant e.g. Combined Cycle Power Plant then the Tenderer is expected to prepare a model of this deterioration to demonstrate that they have considered the different aspects properly.

The Contractor is required to specify contractual water flows in their Tender proposal on an annual basis for the technology they have chosen.

2.5 OPERATION & MAINTENANCE CONTRACT

2.5.1 GENERAL

The Contractor shall enter into an Operations and Maintenance (O&M) Contract with the Owner to provide full maintenance services, and operation of the Power Plant, under instruction of the Owner, for the first life span of the selected prime mover (gas turbine or gas engine first life).

A price to provide these services and a guarantee to fully operate and maintain the new Sheberghan Power Plant for this period with no risk to the Owner shall be included with the tender. Cost of service for the first year operation shall be included in the Tender.

The details of the agreement between the Owner and the Operations and Maintenance Contractor shall be negotiated between them. The expectation is that the O&M Contractor will provide full O&M responsibilities to ensure the Plant meets guaranteed performance and availability.

2.5.2 DURATION

The period of this Contract shall be linked to the prime mover manufacturer's recommended first life overhaul period. The first life cycle shall be considered to be period to the first major overhaul. For gas turbines, this shall be the manufacturer's recommended time to the first scheduled major overhaul (Inspections and overhauls may also be based on equivalent starts). For gas engines the first life cycle shall be the time to the first major overhaul of both top and bottom ends of the engine are scheduled.

At the end of this period the prime mover, generators and auxiliary plant shall be overhauled to the manufacturer's specifications to zero time the equipment for a further life of the same period. The cost of zero timing shall be included in the O&M contract tender price.

2.5.3 STAFF

The Contractor should include costs associated with staff and costs for parts and labor associated with inspections etc.

During the period of the contract the O&M Contractor shall train an Owners O&M team to maintain and operate the Power Plant. At the end of the first two years of operation, the Power Plant will then be operated and maintained by the local O&M team under the responsibility, management, and payroll of the O&M Contractor. At this point the O&M Contractor's expatriate team shall be reduced to provide managerial and supervisory services only. The Contractor shall provide, in the Tender, costs to carry out this service for the first two years, and further figure to carry out the supervisory work to the end of the first life cycle.

2.5.4 SPARES

The Contractor shall provide spares, as specified in Section 1.11.1 of this document, for the commissioning of the plant and through the first year of operation, whereafter, all spares and consumables shall be purchased and owned by the Owner.

2.5.5 PLANT AVAILABILITY

As a part of the O&M Contract, the Contractor shall also specify the guaranteed availability of the plant as a percentage of the possible operating hours in a year (365 × 24 = 8,760 hrs). This figure shall be provided in the Schedule of Technical Data (Appendix 1). If the plant is unavailable for a period exceeding the specified percentage through mechanical or electrical failure of plant under the control of the Contractor, the Contractor shall be penalized by the following formula. The plant availability will be assessed at the end of each 12-month period after the date of commissioning.

The Contractor is to provide heat rate degradation curves for the installed Power Plant over the O&M Contract duration. These will be monitored on a continual basis and adjustments made by penalizing the O&M Contract annual amount paid.

2.6 SITE SPECIFIC REQUIREMENTS

The Contractor shall become familiar with the environment that the plant must operate in and the need to successfully integrate the generation plant into the existing gas gathering facility, water resources, and proposed power plant.

In particular the Contractor shall note:

- The adverse atmospheric environment at the site resulting from extreme temperature ranges including snow and high ambient temperatures. It is anticipated that all liquid drains, separators, and blowdowns exposed to the ambient air will require heat tracing for sub-zero conditions during winter. This can be achieved by hot water, steam, or electric tracing.
- The abrasive and erosive nature of the adjacent sand and gravel terrain.

2.7 TYPE OF PLANT

The design shall be based on CCGT or gas engine technologies. The Power Plant's design shall be based on current best international practice for continuous operation with minimum operator intervention and minimum maintenance.

The plant shall be fully automatic with provision for manual operation. Control shall be from a new control room provided under this contract.

Sufficient instrumentation shall be available to identify any performance deterioration and fault conditions which could eventually lead to a plant trip.

2.8 PLANT LAYOUT

The power plant will be located adjacent to the new Gas Processing Plant complex on a Greenfield site. This allows a good corridor for running gas pipework, and a clear distinction between the Power Plant and the Gas Conditioning Plant. Treated gas will be piped to the Power Plant, and pressurized hot water raised from the Power Plant will be piped to and from the Gas Conditioning Plant in a closed loop.

The Contractor shall be responsible for a cost effective and satisfactory arrangement and layout of all plant covered by this specification. Plant layouts and arrangements shall be submitted to the Owner's Representative for approval.

A conceptual schematic drawing of the proposed Power Plant is included in Appendix 2, but the Contractor may offer a more advantageous arrangement in the tender for consideration.

The following factors, amongst other things, shall be considered by the Contractor in selecting a layout arrangement.

- Proximity of Gerquduq Gas Conditioning Plant
- Location of flares
- Predominant wind direction
- Road access for construction
- Access for maintenance and operations staff, inspection and operations purposes
- Containment of drainage
- Geotechnical conditions
- Fencing for limiting construction access

2.9 OVERALL PERFORMANCE REQUIREMENTS

2.9.1 GENERAL

The Contractor shall design and construct the plant to meet the performance requirements set out herein.

The guaranteed performance shall be based on the fuel specified. The design shall include adequate design margins to allow for all foreseeable operating conditions, normal plant deterioration between overhauls, and achievement of the required design life.

2.9.2 OPERATIONAL REQUIREMENTS.

The whole of the plant shall be designed for continuous operation 24 hours per day, 7 days per week.

The Power Plant shall be sized to generate a net nominal output of 100 MWe at 110 kV, 50 Hz, 0.8 generator power factor, based on the following site conditions:

- Measured at the high voltage side of the main step-up transformer
- Elevation of 477 m amsl
- Temperature of 30 ºC
- Relative humidity of 55%
- Fuel specifications in Section 3.1
- New and clean condition

The Contractor shall provide a full set of expected performance curves including heat rates for the plant calculated for various ambient temperature values in 2 ºC increments from –22 ºC to 56 ºC. Atmospheric pressure and humidity correction factors to be applied for testing and commissioning purposes shall also be supplied.

Each generation unit shall not individually exceed 20 MW as the stability of the Afghanistan distribution system is insufficiently robust, at this time, to handle the potential instabilities created by trips from larger units.

2.9.3 DESIGN LIFE AND PLANT AVAILABILITY

The plant and components shall be designed for the following:

Annual plant availability	
where Availability Factor % = Available Hours × 100 /(8760) %	Guarantee Point by Contractor
Annual DCS availability	99.9%
Minimum plant design life	30 years
Expected normal starts per year	Approximately 30
Maximum expected starts per year, per unit	100
Plant to be suitable for rapid loading and unloading	
Starting reliability to be better than 95%	

2.10 ENVIRONMENTAL REQUIREMENTS

The Power Plant shall comply with the local regulations and World Bank guidelines, whichever is more stringent.

2.10.1 NOISE

The Contractor shall guarantee that the noise level at 1 m from any surface of any operating plant shall not exceed an A weighted sound pressure level of 86 dBA.

The plant shall be designed and constructed to operate with the maximum allowable SPLA at the site boundary fence of L10=70 dBA.

The SPLA noise level resulting from operation of the plant shall not exceed 55 dBA in the control room.

Upon completion of the plant, the A weighted sound pressure levels shall be measured to confirm the plant does not exceed the specified levels.

2.10.2 EMISSIONS TO AIR

In the absence of government environmental legislation, this technical specification adopts the environmental impact assessment guidelines of the World Bank. The relevant guidelines include:

- Guidelines for Environmental Assessment of Energy and Industry Projects[8]
- Ambient air quality guidelines to be used in undertaking an environmental assessment in the absence of local ambient standards[9]
- Air emissions and effluent discharge requirements for thermal power plants[10]

The World Bank ambient air quality guidelines, emission and discharge requirements for thermal power plants are presented in Tables 3 through 6.

TABLE 3 AMBIENT AIR QUALITY GUIDELINES

POLLUTANT	24-HOUR AVERAGE ($\mu g/m^3$)	ANNUAL AVERAGE ($\mu g/m^3$)
PM_{10}	150	50
TSP	230	80
Nitrogen dioxide	150	100
Sulfur dioxide	150	80

TABLE 4 AIR EMISSION REQUIREMENTS FOR GAS-FIRED THERMAL POWER PLANTS: PARAMETERS AND MAXIMUM VALUES

PM	SO_X (mg/Nm^3, UNLESS OTHERWISE SPECIFIED)	NO_X (mg/Nm^3, UNLESS OTHERWISE SPECIFIED)
50	0.2 tpd/MWe (to 500 MWe) 0.1 tpd/MWe (incr. over 500 MWe) Not to exceed 2,000 mg/Nm^3 in flue gases Not to exceed 500 tpd	2,000 mg/Nm^3 (or 13 g/kWh at 15% oxygen)

TABLE 5 EFFLUENT DISCHARGE REQUIREMENTS FOR THERMAL POWER PLANTS: PARAMETERS AND MAXIMUM VALUES

pH	TSS mg/l	O&G mg/l	Cl^- mg/l	TEMP INCREASE	COMMENTS
6-9	50	10	Total residual: 0.2	≤ 3°C	Chlorine shocking: maximum value is 2 mg/l for up to 2 hours, not to be repeated more frequently than once in 24 hours, with a 24-hour average of 0.2 mg/l

TABLE 6 EFFLUENT DISCHARGE REQUIREMENTS FOR THERMAL POWER PLANTS: PARAMETERS AND MAXIMUM VALUES, METALS (MG/L)

Cr	Cu	Fe	Zn
0.5	0.5	1	1

[8] World Bank, 1998, *Environmental Assessment Sourcebook,* 3 volumes Washington D.C., IBRD (In particular, Volume III Guideline for Environmental Assessment of Energy and Industry Projects).

[9] World Bank, 1999, *Pollution Prevention and Abatement Handbook 1998: Toward Cleaner Production,* Washington D.C. IBRD. p424.

[10] Ibid, pp193-200

3.0 FUEL SPECIFICATION

3.1 GENERAL

The primary fuel for the Power Plant shall be the design conditions for the conditioned gas from the Gas Conditioning Plant at the boundary fence with the Power Plant (Table 7).

TABLE 7 CONDITIONED GAS SPECIFICATION

FUEL CONDITION	LIMITING VALUE	UNITS
Sulfur compounds as H_2S	0.54	mg H_2S / MJ
Halide compounds at Cl	0	mg Cl / MJ
Ammonia	0	mg NH_3 / MJ
Oil content	1.19	mg / MJ
Particulates in fuel	0.8	mg / MJ
Particulate size in fuel	1	micron
Sodium and potassium	0.24	ppmv
Silicon in fuel	0.1	mg Si / MJ
Maximum temperature	60	ºC
Minimum temperature	10	ºC
Minimum fuel pressure	4.50	Bar g
Maximum fuel pressure	30	Bar g
Fuel pressure fluctuation	±0.69	Bar g
Rate of change of fuel pressure	To be confirmed by Power Plant Contractor	Bar g / minute
Water content	100	mg/Nm^3

4.0 POWER PLANT

4.1 PRIME MOVER GENERAL REQUIREMENTS

The prime movers and their generators, whether they are gas turbines, steam turbines or gas engines shall meet the following general requirements. Prime movers and generation equipment is to be designed to operate as a base load power generation facility running continuously 50 weeks per year.

- The generation units are to be housed undercover in a generation hall. The building shall be ventilated and all ventilation openings shall be filtered to remove coarse airborne grit.
- Each generation set is to be housed within an acoustic noise reduction enclosure.
- Air filtration systems shall be provided for all combustion air and provide a quality of air as specified by the prime mover's manufacturer or to the specifications below, whichever is the more stringent. They shall be designed for minimum pressure loss and optimum energy conservation and the pressure drop shall not exceed the prime mover's manufacturer's specifications. Where the inlet filter and ducting is connected directly to an outside air source, as opposed to drawing combustion air from inside the generator building, the air inlet system shall include an automatically activated anti-icing system upstream of the filter.
- Generators shall be permanently coupled to the turbine gearbox output shaft. There is no requirement for operation as a free-wheeling synchronous condenser.
- The prime mover and generator set's controls and instrumentation shall be compatible with the selected DCS system and provide the operator all vital operating information and alarm conditions on the DCS. Remote start and stop, synchronization and clearance/ acceptance/ muting of alarms from DCS are required.
- The base frame upon which the prime mover is mounted shall be fitted with all necessary drain pans to collect any spillage or leakage of lubricants and fluids and drain to a waste collection system.
- A fresh oil storage tank shall be provided with reticulation by gravity to each prime mover to allow automatic top up of sump oil by means of float switch level control. The fresh oil storage tank shall have a minimum volume of 1.5 times the delivered oil quantity of the delivery tanker or 5 m^3, whichever is the larger.
- A used oil storage tank shall be provided and be reticulated to each prime mover's sump pump to facilitate removal of used oil from the sump. The waste oil storage tank shall have a minimum volume of 1.5 times the volume of the mobile tanker used to cart away used oil.
- The area surrounding the prime mover and generator set shall be fitted with flammable gas and flame detection equipment that provides alarming and shutdown of the engine in accordance with NFPA 37. A fire protection system to NFPA 12 and 15 or 750 if a water mist system is selected.
- Steam and gas turbines shall be fitted with two radial vibration transducers and a temperature transmitter in each bearing. One axial shaft position transducer is shall be fitted. The output from these probes is to go to SCADA. Excessive vibration levels shall

be alarmed and the unit is to be automatically tripped if vibration levels reach the trip threshold.

- Baseplates shall be fitted with leveling pads or targets.

4.2 GAS TURBINE GENERATOR SETS

- Gas turbines shall be heavy duty industrial units. Aero derivatives are not acceptable.
- Gas turbines shall meet the technical requirements set out in API 616—Gas Turbines for Industrial Service.
- The Contractor shall supply to the Owner copies of all drawings, maintenance manuals, operator's manuals, performance curves and test data as set out in Section 5.3 of API 616.
- The Contractor shall supply with the Tender the manufacturer's design data curves as set out in Section 5.3.4 Curves, API 616, along with completed Appendix 1 Technical Schedule.
- Selection of the method of starting the gas turbines is the responsibility of the Contractor.
- Automatic turning or barring gear shall be fitted to the gas turbines.
- With reference to API 616, Section 3.3.2.7, the baseplate is to be extended to contain leakage.
- Ref section 3.4.2.1 API 616, starting sequence control system shall be fully automatic. Both manual and automatic starting systems shall be supplied. The control system shall display the progress of the start sequence, including the running state of the motor driven auxiliaries.
- Fuel gas shall be filtered by means of a duplex coalescing filter arrangement arresting a minimum 99.97% of all particles exceeding 0.3 micron in size.
- Due to the high probability of dust/sand storms and a known high level of airborne dust, proprietary automatic self-cleaning type air filters shall be provided that will provide an air quality meeting, or exceeding the gas turbine manufacturer's specification for inlet air quality or the specification below—whichever are the more stringent:
  - The total concentration of particulate matter in the filtered air shall not exceed 0.05 mg/m^3 of air
  - Removal of 99% of all particles 2 micron and larger and 99.9% of all particles 10 micron and larger against air-conditioning fine test dust with a clean filter
  - Average synthetic dust weight arrestance (as defined by EN 779 / ASHRAE 52 - 76) of 99% using ASHRAE 52.1 standard test dust
  - Maximum allowable concentration of any alkaline salts (e.g., sodium or potassium chloride), downstream of all stages of filtration of 0.01 mg/kg over the range of relative humidity and ambient salt concentrations ranging from 0.1 mg/kg to 0.5 mg/kg.
- First and second-stage filter elements or panels shall be easily removable during shutdown and positively sealed by the pressure drop across them. Unless otherwise agreed, the first-stage pre-filter elements or panels shall be removable whilst the gas turbine is running, leaving the second-stage high-efficiency filter in place. A door shall be

provided in the side of the filter enclosure to facilitate this. All retaining pins and clamps shall remain attached during removal of the pre-filter.

- A Delta Pressure (DP) transmitter and local indicator shall be provided to measure filter (DP) across the filters, and this value shall be recorded on the DCS.
- Inlet air ducts shall be fitted with silencers and shall be designed to enable the complete gas turbine package to meet the specified noise limits. The silencer design and construction shall be such that the sound pressure level, measured at 1 m from any external surface, does not exceed 83 dB(A) and the sound pressure level at the primary air intake does not exceed 85 dB(A).
- An implosion door is to be provided in the air inlet duct downstream of the filters along with an access door and two reinforced windows to allow viewing of the turbine first stage blades. The access door shall be interlocked and provided with a Castell (or equivalent) keying system to prevent the turbine being started with key removed. Opening of the door with the turbine running shall cause it to shut down.
- The pressure in the air intake plenum chamber shall be measured by one or more locally mounted electronic pressure transmitters.
- In any situation where there is a risk of the air intake filter being clogged by ice, at least two independent electronic pressure transmitters shall be provided. The signal from each transmitter shall be independently connected to the safeguarding system.
- The set point of the shutdown switches connected to these transmitters shall be determined by the gas turbine manufacturer or supplier. It shall be such that, if the filter is completely clogged by ice, the gas turbine will trip and come to rest without damaging itself.
- With the Owner’s agreement, the shutdown facility based on the gas turbine air intake pressure may be replaced by one based on the air intake filter pressure drop. In such a case, the air intake filter pressure drop shall be measured by at least two independent differential pressure transmitters
- The air temperature downstream of the air intake filter shall be measured by not less than two temperature measuring elements.
- The mean of the two readings shall be indicated in the local control room and an alarm shall be initiated if the temperature falls below 3 °C.
- The exhaust system, with silencer and heat recovery steam generators (HRSG) if fitted, shall be designed to enable the complete gas turbine package to meet the specified noise upper limit of a sound pressure level of 85 dB(A) measured any point 1 m from the external surface of the exhaust system at any height up to 2 m above grade or any platform or deck expected to be accessed by personnel when the turbine is in operation.
- HRSGs are to have a bypass duct with actuated dampers fitted to allow operation of the gas turbine in open cycle exhausting through either a bypass stack or the main stack. The dampers shall be able to be modulated to allow a controlled heating or cooling of the HRSG and steam circuits. The bypass duct shall be designed to allow blanking off of the branch to the HRSGs so open cycle operation of the gas turbines is possible if the steam circuit and turbines are not ready to be commissioned coincidentally.
- The acoustic design shall be optimized with the aerodynamic design to produce a compact unit with an acceptable pressure drop.

- Inlet air cooling systems may be fitted to improve hot weather performance. Any system using water to achieve inlet air cooling shall be automatically shutdown when ambient conditions approach freezing.

4.3 GAS ENGINE GENERATOR SETS

- Gas engines to be of the lean burn reciprocating type fitted with inter-cooled turbo-chargers.
- The engines shall be fitted with a reduction gearbox between the engine and generator.
- The generator output shall match the engine maximum power output anywhere in design ambient temperature range. Engine power output is not to be limited by generator output in high ambient temperatures.
- The engine and generator shall be mounted on the same base frame with a flexible drive coupling between the units.
- Each engine shall be supplied with a gas pressure reduction and conditioning train designed to match the engine.
- Fuel gas shall be filtered by means of a coalescing filter arresting a minimum 99.97% of all particles exceeding 0.3 micron in size.
- Inlet air ducts shall be fitted with silencers limiting duct borne noise from the turbo-chargers at the inlet to 85 dBA.
- Fitting of acoustic sound reduction enclosures over each generator set is seen to be not economically viable and, therefore, the Contractor shall supply portable noise absorbing partitioning that will reduce the noise from adjacent machines by a minimum of 8 dBA while maintenance is carried out on a machine. Due to the necessity to lift out cylinder heads, etc., it will not be practical to provide acoustic roofs to the enclosure.
- Each engine shall be supplied with a matching fin fan dry air coolers for lubrication oil, jacket water and turbocharger intercooler cooling.
- Each engine or pair of engines shall be fitted with an exhaust heat recovery unit (EHRU) to produce hot fluid (water glycol mix or thermal oil) to provide approximately 15 MW of thermal energy at 140 ºC for use in the Gas Conditioning Plant. The exact thermal energy requirements shall be given to the Power Plant Contractor when known.
- The engines shall be supplied with all necessary cooling system circulation pumps.
- The lubrication oil system shall include pumps to pump out used oil from the sump to a waste oil storage tank.
- Compressed air system for starting purposes shall be supplied and shall include a dedicated compressor, storage bottles capable of providing sufficient air to give 12 starts of 20 seconds duration. The compressor shall be of sufficient capacity to fully recharge the start bottle(s) from empty in 10 minutes. Operating pressure to be specified by Contractor in consultation with engine supplier.

4.4 STEAM TURBINE GENERATOR SETS

- Steam turbines and their auxiliary components shall meet the API 612 standard. It is recognized that some parameters, such as maximum cooling water inlet temperature, may lie outside the design limits set out in the standard and, therefore, the Contractor shall

identify those parameters that fall outside the specified limits, and detail them in the tender.

- The steam turbine offered may discharge steam directly to a water/propylene glycol cooled condenser, or alternatively, direct to an air cooled dry condenser. It is at the Tenderer's discretion to select the most appropriate condensing system for the conditions and availability of cooling water.
- The steam turbines shall be independent of the gas turbines i.e. not on a common shaft.
- Both power operated and manual turning or barring gear shall be fitted to the steam turbines.
- An automatically controlled stand-by lubrication oil pump and a jacking pump shall be fitted with each steam turbine.
- Sight flow indicators shall be fitted in each bearing-oil drain line.
- The lubrication system shall be fitted with a low oil pressure alarm switch and low oil pressure auxiliary pump start switch.
- A removable thermostatically controlled steam or hot water heating coil shall be fitted in the lubrication oil reservoir.
- All technical data sheets, drawings and steam flow curves specified in API 612 section Vendor's Data, to be supplied with tender along with list of recommended spares.
- Technical Data Manuals specified in API 612 are to be supplied at completion.

4.5 HEAT RECOVERY STEAM GENERATORS

- Heat recovery steam generators may be matched to single gas turbines or to pairs of gas turbines. The decision to use one or two gas turbines per HRSG is the responsibility of the Tenderer to arrive at the most economic solution.
- Ducting to the HRSGs shall be fitted with modulating gas diverter valves to allow open cycle operation of the gas turbines whilst the steam cycle is out of operation and also provide a controlled flow for start up and shut down of the HRSG.
- Operating pressure and degree of steam superheat is to match steam turbine requirements and shall be optimized to give best possible conversion of gas turbine exhaust gas energy to shaft power on an ISA day corrected to local altitude, at full power.
- Supplemental gas firing is acceptable, and if economic benefits are to be gained from incorporation of supplemental gas firing, it shall be offered by the Tenderer.
- The HRSG shall incorporate an economizer, evaporator and superheater sections.
- The HRSG shall be equipped with all necessary relief valves, safety valves, silencers, stop and check valves.
- The HRSG shall be equipped with automatic blowdown facility and controls. Blowdown water shall be collected, filtered in a cartridge filter to remove solids and returned to the raw water storage tank for treatment and reuse. Blowdown water shall be passed through a heat exchanger to pre-heat HRSG feed water and minimize energy losses.
- The HRSG shall be fitted with connections for chemical injection of dosing chemicals. Boiler water treatment chemicals shall be non-toxic after use and not render the blowdown water unsuitable for reuse.

- An automatic chemical dosing system shall be provided for each HRSG. Continuous measurements of total dissolved solids (TDS), pH. and oxygen concentration shall be taken and sent to SCADA. Any other parameters that can be measured to verify boiler water quality shall be verified by routine tests conducted in the laboratory.
- A boiler feed water tank shall be provided to store treated water to boiler quality, or gas turbine quality if used for steam cooling, and have sufficient capacity to store a minimum of 0.1 hour of boiler make up water at the maximum rated evaporation rate of all HRSGs and normal blowdown rate at full rated power. (At 160 kg/sec steam flow => 57.6 m^3 BFW tank).
- An auxiliary gas fired boiler shall be provided to raise hot water and steam at 140 ºC for preheating the steam circuit and maintaining temperatures in all steam systems if required during a gas turbine shutdown. Sizing of the boiler will be determined on a –22 ºC ambient day and calculated steam requirements to maintain the manufacturer's recommended warm up temperature in the steam equipment.
- Approximately 15 MW of energy shall be provided to the Gas Conditioning Plant for process heating using a selected heat transfer fluid.

4.6 EXHAUST HEAT RECOVERY UNITS

- If the gas engine option is selected by the Tenderer as the chosen technology to be used for generation, EHRUs (exhaust heat recovery units) shall be supplied to recover waste heat from the engines' exhaust gas stream to heat the selected heat transfer fluid to transport approximately 15 MW of energy to the Gas Conditioning Plant for process heating. The heat transfer fluid may be water with glycol additive to prevent freezing in winter and corrosion protection, or a recognized heat transfer oil such as that manufactured by Dow Corning.
- EHRUs may be matched to single gas engines or to pairs of gas engines. The decision to use one or two gas engines per EHRU is the responsibility of the Tenderer to arrive at the most economic solution.
- The EHRUs shall be designed and fabricated by a recognized manufacturer of EHRUs.
- Exhaust gas ducting to the EHRUs shall be fitted with modulating gas diverter valves to allow open cycle operation of the gas engines whilst the EHRU is out of operation and also provide a controlled flow for start up and shut down of the EHRU.
- The operating pressure of the heat transfer fluid system shall be sufficiently high through out the circuit to prevent flashing of the fluid under any circumstances. Intended working temperature is 140 ºC, however this is to be confirmed with the Gas Conditioning Plant Contractor along with the total energy requirement.
- Pressure in the system shall be maintained by a suitable pump equipped with a leak tight discharge check valve followed by an accumulator vessel to allow for expansion and contraction of the heat transfer fluid.
- The EHRUs shall be adequately pressure rated for the intended service and be equipped with all necessary relief valves and safety valves. All pressure components shall be designed and fabricated to the ASME VIII code requirements.

4.7 AIR COOLED CONDENSERS AND COOLERS

- Due to the arid nature of the site and the high value placed on water resources, the steam turbine condensers shall be dry, air cooled, fin fan units.
- Dry air coolers shall not be fitted with water sprays to boost performance.
- The air cooled condensers shall be sized to achieve a condensing temperature not exceeding 5 ºC above ambient temperature at full rated output of the steam turbines, plus 15% to allow for future fouling, on a 40 ºC ambient day. Correction curves are to be supplied by the manufacturer of the air cooled condensers to allow calculation of performance during the test run on a day the tests are carried out. The correction curve shall specify steam mass flow rate and temperature of the steam to be condensed which shall match the data for the Power Plant at full load on the day the test is conducted.
- Air cooled condensers' liquid circuit shall be charged with a propylene glycol/ aqueous solution to prevent freezing of the coolant during winter months if a direct air cooled condensing system is not utilized. System shall remain liquid down to –35 ºC.
- The air cooled condensers shall be sized for condensing the full rated output of the HRSGs to minimize loss of boiler water / steam due to relief or safety valves lifting with tripping of a steam turbine. A rise in condensing temperature exceeding 5 ºC above ambient is acceptable during a tripping excursion.
- Condensate shall be collected, filtered to remove any particulates and returned to condensate return tank and then pumped to a de-aerator tank.
- Air coolers shall also be supplied for cooling the following heat loads:
  - Generator cooling
  - Steam and gas turbine lubrication oil cooling
  - Hydraulic power pack coolers
  - Air compressor coolant if liquid cooled
  - Air compressor after cooler coolant

4.8 EXHAUST STACKS

- Exhaust stacks from Gas Turbines shall meet applicable local and national standards. If relevant Afghan Standards do not exist, the stacks shall meet US EPA regulatory requirements for a similar environment.
- Each stack shall be fitted with a platform and access ladder along with a nozzle with a removable bung to allow sampling and testing of exhaust gases. Nozzles shall be of sufficient bore to allow insertion of a handheld pitot tube for velocity measurements.
- Platform areas shall be lit for night testing purposes, and stacks adequately insulated where there is any possibility of personnel coming into contact with hot surfaces.
- The stacks shall be located and arranged to minimize the possibility of exhaust gases being drawn in by the gas turbine or by any other gas turbine or combustion engine or by any ventilation or air conditioning system on the installation.
- The exhaust stack shall be provided with a "top hat" or other suitable provision to prevent the ingress of rain.

- The design of the stack shall be such that it does not act as an ejector in heavy wind causing the turbine to “windmill” when idle.
- The stack shall be manufactured from carbon steel, stainless steel or other corrosion-resistant material as approved by the Owner’s Representative. If carbon steel is used, an adequate corrosion allowance shall be provided to achieve a life of at least 20 years or such other period as may be specified.
- The stack shall be designed and braced or guyed as necessary and to meet ASME STS-1.
- A bypass duct with an actuated butterfly valve shall be provided between the gas turbine exhaust and the discharge stack, to allow the prime mover to operate in open cycle bypassing the HRSG, but not the exhaust silencer, if fitted.

4.9 GAS RECEPTION STATION

- The Contractor shall design and install a high pressure gas reception and metering station at the Gas Conditioning Plant boundary of the Power Plant to condition the incoming gas pressure to an intermediate pressure for distribution around the site. Final pressure reduction trains will be associated with each prime mover as required.
- The gas pressure reduction shall comprise of two parallel trains, each rated at total gas consumption rate of all prime movers and auxiliary plant consumption, plus 25% to allow continued generation with one train undergoing maintenance.
- The gas pressure compression shall comprise of two parallel trains, each rated at total gas consumption rate of all prime movers and auxiliary plant consumption, plus 20% to allow continued generation with one train undergoing maintenance.
- The intermediate pressure value will depend upon whether gas turbines or gas engines are selected. It is the contractor’s responsibility to select the required reduced intermediate pressure value to match the prime mover’s gas train requirements.
- The gas pressure reception station shall be fitted with custody transfer metering, primary filtration, check valves and slam-shut overpressure protection equipment. The custody transfer metering section of the station shall measure and record, gas flow—instantaneous and totalized, pressure and temperature, calorific value, and the concentrations of methane, hydrogen sulfide, oxygen, carbon dioxide, and water vapor.
- Automatic isolation valves (ESDs – Emergency Shut Down valves) shall be fitted and controlled from the fire detection system to isolate the gas supply in the case of a detected fire of sufficient intensity to justify isolating the Power Plant gas supply. These valves shall be able to be shut down manually from the ESD panel or DCS in the control room.
- The gas train shall be fitted with a facility to allow safe venting down of the intermediate gas pressure system to the Gas Conditioning Plant flare system. Similarly, pressure relief valves shall have the relieved gas stream connected to the Gas Conditioning Plant flare system
- A gas reheating system shall be fitted to elevate the intermediate pressure gas temperature above the dew point temperature of any longer chain hydrocarbons present in the gas that may condense after the pressure reduction due to Joule-Thomson cooling. The manufacturer of the selected prime movers is to specify the degree of superheat required for safe operation of the prime mover. Hot water shall be available from the Power Plant hot water circuit to heat this gas.

- The gas pressure reception station shall be fitted with gas leakage and flame sensors and be connected to the site alarming system and fire fighting system. A deluge fire fighting system shall be supplied to protect the gas pressure reception station.

4.10 FUEL GAS COMPRESSION

If gas compression is required the following shall apply.

- Fuel gas compressor shall be fabricated and installed in accordance with API 617 for a centrifugal compressor, API 618 for reciprocating compressors and API 619 for a positive displacement rotary units, if selected. The contractor shall be free to select the style of compressor that will give the best service and operability for the Power Plant.
- There shall be at least 2 × 120% capacity gas compressor skids installed.
- All relieved gases shall be manifolded and reticulated to the Gas Conditioning Plant flare.
- The compressor skids shall be adequately alarmed for fire and detection of fugitive gases. The skids shall be surrounded by a deluge system to NFPA requirements.

4.11 WATER TREATMENT PLANT

- A water treatment plant shall be provided to produce demineralized water for both gas turbine inlet air cooling, if required, and for steam turbine boiler water.
- Raw water shall be drawn from the Gerquduq service water pumps. The Contractor shall reticulate the raw water from the Power Plant boundary to the proposed water treatment plant.
- The water treatment plant shall initially filter the raw water, soften it, and use Reverse Osmosis to make boiler water quality as specified by the steam turbine and HRSG manufacturers. Water for gas turbine operation shall be treated to the standards specified by the gas turbine manufacturer and this will require deionization.
- The Contractor shall supply all necessary chemical storage tanks for regeneration of the resins along with a receiving system to enable safe unloading of tanker trucks. The volumes of these tanks shall be at least 1.5 times the delivery tanker volume or sufficient chemical to provide 2 months continuous plant operation at full load.
- Potable water shall be taken after the reverse osmosis section of the plant, be chlorinated to meet World Health Organization – Drinking Water Guidelines and stored in a covered non toxic, non tainting tank in a cool place. The storage tank volume shall sufficiently large to provide a minimum of 10 days normal consumption. Potable water shall be used for drinking, cooking, handwashing, and showering purposes. Toilets shall be supplied raw water.

4.12 FUEL GAS

- The Contractor shall design, supply and install all necessary gas pipelines to all consumption points on the site, including the Gas Pressure Reduction Station and or compressors if required.
- Fuel gas, prior to entering each prime mover’s gas train, shall be filtered through a duplex coalescing filter with 99.97% arrestance of all particles larger than 0.3 micron. Each individual filter shall be sized to carry full gas flow consumed by the prime mover at full power.

- All pipework downstream of the coalescing filters to the prime mover gas train is to be fabricated in stainless steel and be thoroughly cleaned and purged of particulate material before commissioning.

4.13 COMPRESSED AIR—PLANT AND INSTRUMENT

- The Contractor shall provide a compressed air plant to supply plant process air around the site for air tools etc. The compressed air plant shall be located in a well ventilated building or within a well ventilated room in the Power Plant building
- The compressed air station shall be fitted with a minimum of three plant air compressors, each capable of supplying 50% of normal plant air consumption plus 30%. Compressors shall be manifolded to a common supply header. Plant air compressors may be of the oil ring type, but be fitted with high efficiency oil and particulate filters. Driers to provide air to ISO 8573.1 Class 3.3.3 Standard shall be provided.
- The compressed air station shall be fitted with a minimum of two instrument air compressors, each capable of supplying the normal instrument air consumption, plus 30%. Instrument air compressors shall be manifolded to a common instrument air supply header. Instrument air compressors may be of the oil ring type, but shall be fitted with high efficiency oil and particulate filters, and driers to provide air to ISO 8573.1 Class 2.2.2 Standard. Oil-free compressors are the preferred option for instrument air compressors.
- Operating pressure for both plant and instrument air shall be 6.5 ± 0.5 Bar g.
- Twin receivers shall be provided for each service (plant and instrument air) and be fitted with drains, safety valves, pressure indicators, bypasses, vent valves and isolatable cross connections to allow normal operation with one receiver out of service. Minimum receiver capacity in cubic meters shall be:

  Volume (m^3) = compressor delivery rate in m^3/hr divided by 300

- Driers for each service to be in parallel and sized to be able to handle plant maximum flow plus 30%.
- Air reticulation pipework shall be to ASME B31.3. Plant air may be reticulated in steel pipework; however, instrument air shall be reticulated in condensate and treatment.

4.14 STEAM CONDENSATE

- All condensate from steam circuits shall be collected and returned to a condensate receiving tank.
- Condensate that may be contaminated shall be sent to waste for treatment and disposal, or depending on contaminant, be returned to the raw feed water tank to be treated for reuse.

4.15 EMERGENCY POWER—ESSENTIAL SERVICES

- An emergency power system shall be provided by the Contractor to provide emergency lighting and continued operation of the DCS, fire control panels and essential services until the emergency generator comes on line. This system shall meet the requirements of NFPA 110.
- This emergency power system shall be powered by batteries and inverted by solid state inverter where AC power is required.

4.16 BLACK START AND EMERGENCY POWER GENERATION

- A diesel powered piston engine and generator set or gas turbine auxiliary power unit shall be supplied that will automatically start on loss of connection to the National Grid or total failure of the main Power Plant generation plant that necessitates an internal power supply being provided to maintain Power Plant operations. Emergency power plant shall be of sufficient capacity to allow for starting one of the primary gas turbine sets or gas engines, the start up boiler, the off-site fire pumps, and maintain power on the essential bus.
- Once mains voltage is restored, the engine shall be automatically shut down after a time delay of 10 minutes.
- The black start and emergency generator shall be provided with a local day fuel tank having sufficient capacity for at least eight (8) hours continuous operation of the engine at 110% full load. This tank shall be fitted with a low level alarm. A primary diesel storage tank shall be provided on the site having a capacity of 10 days continuous operation of the black start and emergency power generator.

4.17 START UP AND AUXILIARY BOILER

- A start-up hot water boiler shall be provided by the Contractor to provide warm-up heat to the HRSGs and steam plant in the Power Plant before start up, as well as providing maintenance heat for short shutdowns of the steam plant.
- The boiler shall be gas fired and be able to be fired on conditioned gas or, sweet raw gas if conditioned gas is unavailable from the Gas Conditioning Plant.
- The Contractor is to reticulate hot water in insulated pipework as specified in this document.

4.18 TEST, MEASUREMENT, AND SAMPLING STATIONS

Test, measurement, and sampling stations shall be fitted on the natural gas line as it reaches the Power Plant.

The gas flow will include continuous online testing for:

- Pressure
- Temperature
- Flow rate
- Calorific value
- Methane content
- Hydrogen sulfide levels
- Oxygen levels
- Carbon dioxide
- Water

5.0 THERMAL ENERGY TRANSFER SYSTEM

5.1 GENERAL

The amine regeneration process in the Gas Conditioning Plant requires high pressure hot water at 140 ºC. The heat load at the amine process is expected to be approximately 15 MWt (to be confirmed) at 140 ºC. For this heat load, and if gas engines are the chosen technology, high pressure hot water (HPWH) as opposed to steam, is the preferred method of heat transfer.

The whole system shall be pressurized to prevent flashing to steam. At 140 ºC delivery, this is approximately 3.5 Bar g. The ultimate system design and configuration shall be agreed between the Owner and the Power Plant Contractor the most cost-effective system can be implemented.

5.2 SCOPE OF SUPPLY

The high pressure water system scope of supply shall include, but not necessarily be limited to the following:

- Pipelines
- Metering flow, and supply / return temperature
- Pressure metering
- Consumables and spare parts for initial fill and first year of operation
- Installation, testing and commissioning

5.3 CODES AND STANDARDS

The high pressure water reticulation system shall be designed, fabricated and tested to ANSI B31.3.

5.4 TEST, MEASUREMENT AND SAMPLING STATIONS

Test, measurement and sampling stations are required to be fitted on the high pressure hot water system piping system to/from the Power Plant.

This on-line continuous testing will include

- Pressure
- Temperature
- Flow rate

6.0 FLARE SYSTEM

Two flare headers will be provided by the Gas Conditioning Plant. The Power Plant Contractor shall use these headers as required for venting and blowdown.

7.0 PLANT UTILITIES

The utilities scope of supply shall include, but not necessarily be limited to the following:

- Plant / instrument air systems
- Starting air systems if required
- Preheating boiler, if required.
- Connection to pumping station
- Fire water ring main extension
- Fixed fire water monitors
- Water treatment including filters, softeners, and reverse osmosis plants
- Demineralized water plant
- Eyewashes
- Safety shower
- Sewage system—septic tank type
- Air conditioning systems for control room
- 415 V, three-phase power points regularly spaced for maintenance
- Covered chemical handling and storage
- Nitrogen bottle covered storage
- Consumables and spare parts for initial fill and first year of operation
- Installation, testing, and commissioning
- Cranes and hoists

8.0 FIRE PROTECTION

8.1 GENERAL

The location of the proposed Power Plant is in a relatively remote area, therefore plant personal will be the first responders to a fire as the main line of defense. The Tenderer shall include sufficient design, equipment, and procedures for plant personal to fight fires, including training.

The Contractor shall design, supply, install, test and commission the Fire Protection system required for the works. All fire protection work shall be in accordance with NFPA standards.

- There is an existing raw water storage tank and three fire water pumps on the old gas processing plant site approximately 220 m southeast of the southeast corner of the new power plant. this plant is considered to be reusable, however the contractor shall verify the adequacy of the existing plant in relation to NFPA 20 and utilize what equipment meets the code requirements.
- The Contractor shall design and install a ring main to protect the Power Plant site in accordance with NFPA 13 and 14 that connects to the existing ring main on the old gas plant site. The Contractor shall verify the adequacy of the existing ring main. If inadequate the Contractor shall provide for new reticulation and identify the sum to achieve this in the tender.
- Due to the impracticality of fitting a diesel fire pump in the existing pump station, emergency fire pumps will have to be electrically powered from the emergency generator. (Note, the existing pump is underground and draws water from an adjacent underground storage tank. There is insufficient floor space in the pump house to fit a diesel powered fire pump) Upgraded fire pumping system shall meet NFPA 20 requirements along with water storage tank.
- Engines for fire pumps and emergency power generators shall be capable of carrying full rated load within 20 seconds of initiation of cranking.
- The two 11 kV/110 kV transformers and enclosures are to be fitted with automatic deluge system in accordance with NFPA 15.
- Generator and gas turbine enclosures shall be fitted with CO_2 flood systems in accordance with NFPA 12. The carbon dioxide flood extinguishing system shall be designed to and installed as a high pressure total flooding system. The generator fire protection system shall consist of two banks of CO_2 cylinders, (one set duty, the other set reserve) with a set of automatically controlled directional valves to direct CO_2 to the affected generator. Each bank of CO_2 cylinders shall have sufficient capacity to extinguish a fire in a generating unit with:
  - A rapid initial discharge (1 kg of CO_2 for 0.75 m^3)
  - A prolonged discharge designed to maintain a minimum concentration of 30% CO_2 for 20 minutes
- The duty CO_2 cylinders shall be discharged automatically, by the action of thermostatic detectors (making contact in the event of an abnormally high temperature or high rate of temperature change).

- The reserve CO_2 cylinders shall be discharge via covered push buttons (one for each generating unit) on the front of the CO_2 control panel.
- All rooms in the Power Plant building shall be fitted with water sprinkler systems in accordance with NFPA 13. Selection of sprinkler layout and design flows shall be determined from NFPA 13 and from the fire risk evaluation.
- A fire water ring main shall be reticulated around the site with hydrants for hand hose reels and monitors to NFPA 14.

8.2 FIRE MAIN PIPEWORK

The Contractor shall provide all pipework and fittings. All pipework and fittings shall be ductile iron cement lined pressure pipe or polyethylene pipe underground and screwed galvanized pipe above ground.

8.2.1 ISOLATING AND FIRE HYDRANT VALVES

An isolation valve shall be supplied at the tie in point to the existing fire system.

Hydrants shall be marked in accordance with NFPA Code of Practice for the Location and Marking of Fire Hydrants.

8.2.2 STORAGE TANKS SPRAY SYSTEM

The Contractor shall provide all of the pipework, valves, heat detectors, nozzles, and projectors necessary to ensure efficient fire protection and water cooling of the working fluid storage tanks.

Due consideration shall be given to the selection of the deluge valves in order to avoid hydraulic shock when deluge valves are activated.

8.3 FIRE ALARM PANEL

The Contractor shall supply and install a fire alarm system complete with smoke detectors, manual call points, hydraulic heat detectors and alerting devices.

The operation of any detector or manual call point throughout the Plant shall cause all sirens to sound, and the muting switch shall cause all sirens to cease while visual annunciation remains energized. A failure of supply, a cable break, or earth fault in the installation shall cause fault annunciation to energize. The circuits shall be supplied as necessary. The detector modules used to determine if a fire sensor has operated or a fault has occurred on the detector circuits, shall be installed on the fire alarm panel, as an externally visible display.

The fire alarm panel shall be located in the control room.

The fire protection system contractor shall provide an interconnection with the security, HVAC systems and external fire service.

A site “Sector Indicator Panel” is required at the main entrance to the site.

8.4 MANUAL CALL POINTS

Manual call points shall be located in the local control room, at each egress point through the security fence, and at the hydrocarbon storage tanks. Call points shall be break-glass type supplied in accordance with the requirements of NFPA standards.

8.5 SMOKE AND HEAT DETECTORS

Smoke detectors shall be installed in the control room, with heat detectors installed as necessary above false ceilings.

Each detector shall have its terminals, circuit number and zone number permanently marked. This marking shall be visible when in position.

8.6 ALERTING DEVICES

Alerting devices shall be of the electronic siren type and shall produce a distinctive sound that is easily identifiable from other alarm devices used in the plant.

Siren sound volume shall be suitable for the locations in which they are to be installed and shall be clearly audible above the ambient noise level.

8.7 FIRST AID FIRE APPLICATIONS

First aid fire fighting equipment shall comply with NFA requirements.

The Contractor shall provide in the control room, complete with identification signs, and one wall-mounted 9 kg carbon dioxide fire extinguisher.

8.8 ACCEPTANCE TESTS

The Contractor shall carry out Acceptance Tests as set out in NFPA standards, and in accordance with instructions from, and in the presence of an, approved Independent Qualified Person (IQP).

When these tests are satisfactorily completed, a Certificate of Compliance shall be supplied by the IQP, once they are satisfied that the system complies in all respects with the appropriate standards.

9.0 CONTROL AND INSTRUMENTATION

9.1 GENERAL

The Control and Instrumentation (C&I) systems for the Power Plant, and Gas Conditioning Plant, shall be supplied individually under their respective packages. The Power Plant shall be provided with its own control room.

It is necessary for the Power Plant and Gas Conditioning Plant control systems to communicate with each other so that conditioned gas production is matched with power demand. In addition, sufficient data shall be made available between both systems to enable all equipment at both sites to be monitored from either control room.

Overall requirements for control and instrumentation are shown in drawing 102864634-1511 “Control System Block Diagram,” and in the P&I Diagrams and other drawings attached.

9.2 SCOPE

The Sheberghan Power Plant shall be designed for automatic operation from the station control room. It shall also be possible to remotely control and monitor the station from the proposed National Load Dispatch Center (NLDC) in Kabul.

The scope for the instrumentation, control and safeguarding systems includes supply, fabrication, assembly, integration, programming, testing, installation and commissioning of control, instrumentation and safeguarding equipment consisting of at least:

- Engine (or turbine) control systems
- Generator control systems
- Instrumented protective systems including fire and gas detection systems
- Balance of plant distributed control systems (DCS) including communications interfaces
- Instrumentation, control valves and related field equipment
- Unit instrumented protective systems (IPS)
- Unit fire and gas detection systems
- Balance of plant IPS
- Balance of plant fire and gas detection systems
- SCADA system interface (for remote control)
- Communications equipment and interfaces
- LAN equipment to link all systems on site
- Interface with the Gas Conditioning Plant DCS
- Historian (historical data recorder)
- Auxiliary control systems

- Machinery condition monitoring system
- Documentation, training, spares etc. as defined elsewhere in this Specification

Refer to clauses 10.0 and 11.0 for further details on the communications and SCADA system requirements.

9.3 SYSTEM DESCRIPTION

9.3.1 ARCHITECTURE

The general arrangement of the control system equipment for Sheberghan is shown on drawing 102864634-1511, “Control System Block Diagram.” The arrangement is intended to be generic and not based on specific vendor equipment.

A DCS shall monitor and control the Power Plant. It shall consist of field equipment, local controllers, overall coordinating controller, Human Machine Interface (HMI) and network (LAN/Bus) cabling and equipment to link the various components together. Where applicable, Instrumented Protective Systems (IPS) conforming to IEC 61508, shall be provided and these shall be interfaced with the DCS to allow it to monitor the IPS parameters and function.

The control system shall have the following characteristics:

- Multi-tier system consisting of equipment at unit, station and remote levels
- Unitized systems with dual redundancy of critical components to ensure very high reliability and availability.
- Use of computer equipment, LAN and WAN technology
- Open systems approach for interoperability of software packages including OPC connectivity
- Control and monitoring possible from the local (unit) level, the station level or the remote level
- Station and remote interface for all C&I and IPS systems via the Human Machine Interface (HMI)
- Time synchronization between all systems with time reference being provided by a GPS clock.
- Collection of Power Plant historical data for storage in the historical server.

The Power Plant shall have a common overall control system, which will have distributed nodes located in each unit control compartment, in the station control room and by the auxiliary systems. The control system nodes will be linked via Ethernet or serial links. A TCP/IP based network is preferred for the higher (station) level LAN, with local instrumentation networks such as Profibus or Foundation Fieldbus used for field interface, if supported by the equipment provided.

The engine/turbine vendor’s standard control system may be offered for engine/turbine control however it must be interfaced via serial data link with the DCS to allow the unit to be monitored and controlled from the control room.

The unit C&I equipment will generally be housed in the unit control cubicles beside the machines. Station and common balance of plant C&I equipment will be housed in the station control room and/or adjacent equipment rooms. Auxiliary process control equipment, such as water treatment, will be sited with these plants as appropriate.

9.3.2 UNITIZATION OF C&I EQUIPMENT

The engine/turbine control, generator control, unit IPS and unit auxiliary systems shall be provided on a per unit basis.

9.3.3 POINTS OF CONTROL AND HMI LOCATIONS

The Power Plant will normally be manned and will also be monitored remotely from the proposed National Load Dispatch Center (NLDC) in Kabul. The capability to control the power plant from the NLDC shall also be provided. For maintenance purposes, or if there is a communications or other failure, it will be possible to monitor and control the units and Power Plant to varying degrees from different locations including:

- *Locally at Auxiliary Equipment*—For maintenance and testing, it shall be possible to operate some equipment from a local panel. A “Local/Remote” switch shall be provided which shall, when in the “Local” position, enable local Start/Stop or Open/Close etc. controls. The status of the Local/Remote switch shall be monitored to provide a warning when remote control is unavailable.
- *Locally (unit)*—Suitable controls and indications shall be provided on the local control panels to allow operation of the unit for maintenance purposes. If control systems at a higher level have partially failed it shall be possible to start the unit from this level provided all pre-start conditions are satisfied and common equipment, such as the gas plant, are operating correctly.

  A manually initiated unit emergency shutdown button shall be provided on the local control panel.
- *Locally (station control room)*—Complete unit/station monitoring and control facilities shall be provided from the station control room.

  Manually initiated unit emergency shutdown buttons shall be provided in the station control room.
- *Remotely (NLDC)*—The system shall provide for unit/station remote control and monitoring from the future NLDC in Kabul. The remote control interface shall be implemented either as a separate remote terminal unit (RTU), or via a virtual RTU incorporated in the station control system.

The system shall be provided with an interface for Automatic Generation Control (AGC) if this application is implemented on the Energy Management System (EMS) at NLDC.

9.3.4 REDUNDANCY

The control systems shall have an availability of at least 99.98%. To achieve this, critical parts of the control systems shall be arranged in a dual redundant configuration. This shall include DCS servers, controllers, station HMI, LAN, WAN and network components (hubs/switches). It is not necessary to duplicate the DCS inputs and outputs (I/O).

Critical equipment shall also be supplied from two sources of power with a changeover arrangement fast enough to prevent disruption in the equipment’s operation.

If a failure of the duty equipment is detected, the system shall automatically transfer to the backup equipment. Failure of backup equipment shall be detected as soon as it occurs rather when it is required to operate.

9.3.5 APPLICATION COMMUNICATIONS

The various C&I software applications at the Power Plant shall have open interfaces to allow the different software packages to exchange data over the network or over serial links. In particular the OPC (OLE for Process Control) interface shall be supported.

The use of OPC communications links shall facilitate integration of control, IPS and other systems to provide a more consistent operator interface format.

9.4 UNIT CONTROL SYSTEM

Facilities shall be provided for automatic and semi-automatic starting, synchronizing, MW loading and unloading, MVAr loading and unloading, and shutting down of the unit, together with comprehensive monitoring of the equipment.

The unit control system shall include generator control panels with their own self-contained protection, instrumentation, monitoring, synchronization, and excitation control system. If a local screen based HMI is provided on the unit controller it shall consist of an industrial grade “Panel PC/display” type system with color LCD screen.

The unit control system shall connect to the station LAN, and communicate over the LAN with other local control/monitoring systems. Local electronic systems that have serial rather than LAN interfaces shall be connected via serial link and will use a standard protocol such as Modbus or DNP 3.0. All measurements, status points, alarm points, sequence of events records and diagnostic points shall be available locally on the station HMI via the overall control system. Remote indications shall be a sub-set of those displayed at the station.

The vendor’s standard instrumentation may be provided for the units; however it will be required to meet the appropriate international standards.

9.5 STATION CONTROL SYSTEM

9.5.1 GENERAL

The overall station DCS shall monitor and control the units (via unit controllers) and station balance of plant (BOP).

A control desk with two HMI screens, two printers and an engineering workstation shall be provided in the station control room. DCS HMI screens need not be installed in unit controllers, however there shall be provision to connect a portable DCS HMI and the engineering workstation into the LAN at the unit control system to assist with commissioning and for diagnostic and fault finding purposes.

As well as configuration for the station control system, the engineering workstation shall allow configuration/programming of the unit controller, IPS, protection relays and other programmable systems.

9.5.2 FACILITIES

The DCS shall provide and incorporate the following facilities as a minimum:

- Monitor and control each unit
- Monitor and control each HRSG (if provided)
- Monitor and control the station including execution of control algorithms and sequencing as required

- Calculate derived values
- Run application programs, such as measurement validation and comparison, valve stroke testing etc.
- Perform process safeguarding for instrumented protective functions up to IPF SIL a2
- Perform self monitoring and fault diagnosis
- Present graphic displays of the process with live values
- Display and printing of alarms and events
- Logging and reporting
- Sequence of event recording and logging
- Trending and history of signals
- Remote alarm acknowledge/reset

9.5.3 DCS OPERATOR INTERFACE

9.5.3.1 Human Machine Interface

The DCS Human Machine Interface (HMI) in the station control room shall, as a minimum, consist of the following:

- Two operator workstations, each incorporating a 21-inch color LCD screen, keyboard, pointing device and audio output
- One Emergency Shutdown/ Manual Override Switch (ESD/MOS) console, with ESD pushbuttons and master MOS enable key switch
- One black and white laser printer for alarm/report printing
- One color printer for trend graph printing, color screen dumps and backup alarm/report printing
- One engineering workstation

The HMI shall be configured with graphic screens showing the plant and process, in whole and in detail by function and unit, with live real time data displayed for digital data and analog values. It shall also show control loop “face plates” and be configured with trend graphs of all significant process variables.

9.5.3.2 Gas Conditioning Plant Monitoring

The HMI shall also be configured with graphic screens showing live values and status for all the Gas Conditioning Plant equipment. These graphics shall include a process overview diagram, a screen per function showing status and values, a screen or screens for all auxiliary services including water treatment, and a list of the outstanding alarms. The Tenderer shall include provision to either access all Gas Conditioning Plant graphics directly on the Power Plant HMI, or develop a minimum of 10 graphics to display data received from the Gas Conditioning Plant.

9.5.3.3 Engineering Workstation

The engineering workstation shall include maintenance and engineering facilities to allow access to DCS system diagnostic information and for reconfiguration of DCS functions. Diagnostic information shall also be available via the main DCS HMI screens.

The engineering workstation shall also provide diagnostic information and allow reconfiguration of IPS systems and any other programmable systems on site.

9.5.3.4 Keyboards

The keyboard and pointing device provided shall be the control system vendor's standard. If the vendor’s standard keyboard is not a 101 key AT-type keyboard or equivalent then a 101 key AT-type keyboard shall also be provided as well for the DCS HMI systems.

9.5.3.5 Emergency Shut Down / Manual Override

The ESD/MOS console shall be mounted with a unit ESD pushbutton (red, momentary action, protected by a flap) and a key operated master maintenance override enable switch (MOS) and MOS feedback lamp.

9.5.3.6 Printers

The two printers shall be connected to the local LAN in the station control room and shall be available to applications running on all station PCs. The DCS shall log unit and station events and alarms, sequence of events recorder (SER) and operational reports to one or other printer. If the selected primary printer is not available then the FCS shall automatically direct output to the other printer. It shall also be possible to dump screen graphical diagrams to the printer.

9.5.4 INTERFACE TO GAS CONDITIONING PLANT DCS

The DCS shall be configured to communicate with the Gas Conditioning Plant DCS over the WAN to exchange data. At least the following interfaces shall be provided:

- OPC (DAS 1.0a or 2.0)
- DNP 3.0 over IP Master (to request plant data)
- DNP 3.0 over IP Slave (to send Power Plant data when requested)

All values and parameters in the Power Plant DCS database shall be accessible to the Gas Conditioning Plant DCS.

9.5.5 ALARM SIRENS

Sirens and visual indication (e.g., flashing light) shall be supplied in appropriate locations around the Power Plant complex to alert operating personnel of high priority alarm conditions. Locations of the alarm indicators shall be chosen to ensure that the alarm can be seen and heard from all areas of the Power Plant complex.

9.5.6 SEQUENCE OF EVENT RECORDING (SER)

The DCS shall be equipped with a sequence of events recorder (SER) system for event logging purposes. The SER shall report time stamped events and alarms for the DCS and IPS systems. Print out of all these events shall be possible on the DCS color printer.

The SER shall store plant events and IPS system failures in the order of occurrence. The events logged by the SER shall include:

- Hard-wired digital and analog trip inputs per the cause and effect (C&E) diagrams
- Hard-wired trip outputs
- Trips via communications links

- Operator actions (overrides, manual trips)
- Circuit breaker open status

9.5.7 DATA HISTORIAN

A historian application shall be provided to collect Power Plant and Gas Conditioning Plant data, store the data without loss of detail for at least five years and present the data in various formats for clients to use.

The data points to be provided to the historian and their frequency of update shall be agreed upon with the Owner before implementation.

9.6 TIME SYNCHRONIZATION

Accurate time synchronization shall be provided for all IED internal clocks including the Station Control System, fault recorders, protection relays and any metering clocks.

The real-time clock or clocks within each device shall be synchronized to within 1 mSec of Afghanistan time (UTC + 04:30:00.000) by a GPS clock provided at the Power Plant. The GPS clock shall be connected to a suitable GPS antenna installed on the roof of the control building or at another suitable location providing adequate visibility to GPS satellites.

The GPS clocks shall also provide both unmodulated and amplitude modulated IRIG-B signal outputs which can be used for time synchronization. If necessary, a Network Time Protocol server (NTP server) shall be provided to synchronize devices on the substation LAN.

9.7 PROTECTIVE SYSTEMS

9.7.1 GENERAL

The areas of risk requiring dedicated safeguarding systems are:

- Gas handling equipment
- Engine (turbine) units

Each unit shall be controlled and protected by its dedicated control system and associated protective or instrumented protective system (IPS), and fire and gas protection system.

In the event of an emergency or critical failure, a unit or the complete station will be shut down by the appropriate protective system. “Cause and effect” (C&E) diagrams will show actions that result from different emergencies. The Contractor shall produce the detailed C&E diagrams.

9.7.2 HAZARDOUS AREA CLASSIFICATION

The boundaries of hazardous areas shall be defined during detailed design. The control rooms and any auxiliary rooms shall be safe (non-hazardous) areas.

Any equipment to be located in hazardous areas in the field shall be certified for Zone 2, Gas Group IIA, Temperature class T4.

9.7.3 SIL CLASSIFICATION

The gas conditioning equipment will be classified as SIL1. Final classifications will be made during the detailed design stage in accordance with IEC 61508-5.

9.8 INSTRUMENTED PROTECTIVE SYSTEMS

9.8.1 REQUIREMENT

Instrumented protective systems may be used provided they meet the requirements of IEC 61508 and IEC 61511.

Unit and plant IPS systems shall not rely on LAN/WAN interfaces to function, however they shall provide operator interface communication this way. That is, by use of an OPC compliant or another open interface, the station control system shall provide HMI functionality for the IPS systems.

Fire and gas detection may be part of the IPS but with separate I/O. Fire and gas alarms shall also be reported via the DCS.

9.8.2 PROTECTIVE SYSTEM CHARACTERISTICS

The IPS and emergency shutdown (ESD) systems shall provide safeguarding, segregated from the process control and monitoring system, for IPF loops SIL 1 and above using fail-safe design principles. The protective shutdown and ESD systems shall interface with the station control system to provide shut down and safety status information to the operator.

The design shall implement protective shutdown functions for unit emergency shutdown and overall ESD for station shut down. An overall ESD causes shutdown of the station and will be initiated by fire sensors and gas detectors.

It shall be possible to manually initiate unit/station ESD from the local control compartment or station control room as well as remotely from the Kabul NLDC via the SCADA system.

Safeguarding functions up to IPF SILa may be implemented via the unit or station control systems, but may be connected to the IPS. Safeguarding of IPF Class SIL1 and above shall be via a suitable PLC type IPS conforming to IEC 61508-2. All equipment shall be TÜV AK-5 certified to at least SIL 3. All IPS systems installed under this Contract shall be of the same make.

9.8.3 STRUCTURE

The protective requirements shall be divided into various logic groups (UZ groups) according to the sub-systems being protected, and as indicated on the cause and effect (C&E) diagrams. All inputs and outputs associated with a logic group should, as far as practicable, be allocated to separate I/O cards from inputs and outputs of another logic group.

9.8.4 IPS I/O

All the field instruments that are connected to the IPS shall be routed and terminated directly on screw terminals in the IPS cabinet without any intermediate marshalling.

9.8.5 SYSTEM APPLICATION SOFTWARE

The application software shall conform to the requirements of IEC 61508-3. The application logic shall be presented and documented in, at least, functional logic diagram (FLD) format. For documentation purpose the system’s self-documentation can be used (print-out directly from the system).

The Contractor shall indicate the facilities and limitations of the system (if any) to perform simple calculations such as compressor surge trip parameters, etc., and confirm the appropriate handling of division by zero.

9.8.6 FIRE AND GAS DETECTION AND PROTECTION SYSTEMS

Fire and gas detection systems will cover:

- Units
- Station control room
- Unit control cubicles

Fire and gas detection will be part of the IPS and will report alarms via the station control system.

9.8.7 FIRE AND GAS DETECTORS

A minimum two ultraviolet (UV) detectors shall be provided for each engine/turbine and gas control valves compartment.

In addition, any other compartment in which a fire risk exists shall be provided with a minimum of two heat detectors of fixed temperature, thermo switch type.

Fire detection system shall be arranged in two independent loops with paired detectors.

Manual alarm call points shall be provided and located near any enclosure access doors.

9.9 MACHINERY CONDITION MONITORING SYSTEM

A machinery condition monitoring system (MCMS) shall be provided, including on-line condition monitoring, asset management, and performance calculations. Data, including vibration, for the system may be directly connected I/O, or made available via the DCS. The system shall enable the original equipment manufacturer of the rotating machinery to access the information remotely (via modem). The server and one client shall be located in the Power Plant control room, and provision shall be included for two additional remote clients.

The system offered should provide at least the key features of the Bently Nevada System 1. The Tender shall include sufficient details to enable evaluation of the proposed system.

9.10 INSTRUMENTATION

9.10.1 GENERAL

The Contractor shall supply and install all required instrumentation for the Power Plant.

Instruments shall be calibrated in SI engineering units. All instruments shall be checked and calibrated before installation and be labeled to that effect. Calibration of all instruments is to be checked as necessary during commissioning.

9.10.2 PRIMARY SENSORS

9.10.2.1 Flow

Flow elements shall be weld-in holding ring type ASME long radius wall tap flow nozzles complete with nipples, adapters, reservoirs, holding rings and pins.

Orifice plates for use with orifice flanges shall be stainless steel, thin plate square edged, poodle type, faced and recessed in accordance with the requirement of ASME. Orifices shall be complete with orifice flanges, gaskets, and jacking screws. The sensing instrument lines shall be completed with process shut-off valves.

Vortex flowmeters are the preferred type for gas flow.

9.10.2.2 Temperature

Thermocouple type shall be Nickel Chromium / Nickel Alloy (type K).

Resistor Temperature Detectors (RTD) shall be Platinum with a resistance of 100 ohm at 0°C.

9.10.2.3 Pressure

Pressure elements shall be of the diaphragm type. All pressure sensors shall be sized such that the normal working range shall be between 50 % and 70 % of the sensor's maximum continuous working pressure.

9.10.3 TRANSDUCERS

9.10.3.1 Flow Transducers

Flow transducers for orifice elements shall measure the differential pressure developed across the primary flow element and convert DP into flow. The DCS shall correct the transducer output signal for pressure and temperature variations at the sensing element if required.

9.10.3.2 Pressure and Differential Pressure Transducers

Unless specified otherwise pressure and differential pressure transmitters shall have a minimum zero suppression range of 25 % of span.

9.10.3.3 Level Transducers

Output signals from level transducers shall be directly proportional to level measurements unless otherwise specified.

Reservoirs (constant head chambers) shall be furnished for all level transducers of the differential pressure type used on pressurized vessels. The inlet piping connections shall be 20 mm minimum, socket welded, and the outlet piping connection shall be 15 mm minimum, socket welded, both of them suitable for the pressure and temperature listed on the Instrument Data Sheet. Reservoir material shall be suitable for the process conditions.

Differential pressure level transducers used in conjunction with reference chambers or legs shall be capable of zero suppressions approximately equal to their differential pressure ranges and shall be capable of withstanding full vessel pressure on either measuring element (with the other element at atmospheric pressure) without damage or loss of calibration.

The level transducers for vacuum service shall be of the displacement type and shall be provided with 50 mm socket welded connections.

9.10.4 TRANSMITTERS

Transmitters shall be equipped with local indicators unless otherwise specified. If the transmitter does not offer a local indicator as a standard option, the Contractor shall provide and install a separate local indicator near the transmitter.

The Contractor shall only provide transmitters which are not affected by changes in environment and process conditions, unless such relationship are known and can be calibrated out of the transmitted signals. Transmitters shall have easily accessible adjustments for zero, span and linearity. The signal range shall be linear 4 to 20 mA. The transmitters shall be of 2-wire type, with the power supply at the receiver or the receiving system. Transmitters shall have an accuracy of 0.25% or better certified by the manufacturer.

Analog signals delivered by DCS shall be standard 4 to 20 mA signal.

9.10.5 IMPULSE LINES

Instrument tapings shall be from the top of line for horizontal pipes. For gas service lines shall slope up to the instrument. For liquid service lines shall slope down to instrument unless it is likely to cause blockage due to solids in which case they shall also slope up.

For pressure instruments, the slimline valve may be used as the isolate/vent/drain facility provided the impulse line is less than 3 m long and provided the slimline valve is accessible. Otherwise an isolate/vent/drain manifold is required at the instrument.

The number of joints in tubing shall be kept to a minimum.

A wet reference leg shall be used for DP type level instruments.

A 300 mm length of tubing shall be provided on all vent/drain connections.

9.10.6 MOUNTING OF PLANT INSTRUMENTS

Dedicated process connections are required for IPF SIL 1 and above instruments with only one instrument per tapping. Instruments of IPF SIL a2 and below can be combined with other functions.

DP level instruments with a flange for direct mounting to the process connection shall be used in preference to standard ½-inch NPT connections.

10.0 COMMUNICATIONS SYSTEM

10.1 GENERAL

Optical communications links from Sheberghan Power Plant to the nearby MEW Sheberghan substation (SHB) shall be provided.

The Power Plant Contractor shall provide all internal site communications systems and external links as far as the substation communications interface panel.

It is intended that the MEW communications network will use Synchronous Digital Hierarchy (SDH) as the communications transport system. SDH multiplex equipment will be installed at Sheberghan substation and a SDH Terminal node shall be installed at the Power Plant. (Alternatively only the required tributaries could be extended to the Power Plant.)

A local PABX shall be installed at the Power Plant to cater for voice, fax, and data communications at both the Power Plant and the Gas Conditioning Plant.

10.2 COMMUNICATION SYSTEM STANDARDS

The supply shall conform to relevant technical requirements of the latest current applicable Standards.

10.3 COMMUNICATIONS REQUIREMENTS

10.3.1 INTERNAL

Internal communications requirements include:

- A dual, high speed (10 Mbps), wide area network (WAN) data link for the DCS system to connect to the Gas Conditioning Plant DCS
- LAN and WAN equipment including hubs, switches, routers, Cat 5e, and fiber optic cabling
- One PABX connected to the MEW operations telephone network and to the local PSTN
- Telephones as required around the site including at the units and auxiliary equipment (acoustic hoods shall be fitted in noisy areas)
- Two MEW operations network telephones, one hotline phone and one fax machine in the station control room

The station-wide LAN shall be a dual redundant fiber optic network. Local LANs may be copper networks.

The DCS LAN shall be connected to the Gas Conditioning Plant DCS LAN via two fiber optic cables that will be installed by the gas plant contractor via two separate routes between each control/equipment room. Internal telephone circuits shall be provided on these fiber optic cables via suitable multiplexing equipment.

No public address, closed circuit TV, intercom, or portable radio systems are required for this project.

10.3.2 EXTERNAL

The site requires the following external communications services:

- A single high speed (10 Mbps) data interface for the station control system for remote control and monitoring from the NLDC in Kabul
- E1 link for telephone/fax communication
- Protection signaling channels for outgoing 110kV lines
- Public Switched Telephone Network (PTSN) interface for voice communication and fax (may connect via MEW communications system)
- Communications link for Engineering data
- Feedback of substation status and alarm data from the MEW RTU at Sheberghan substation
- Dial-in access for Contractor/Supplier remote monitoring and diagnostics

An optical fiber communications cable shall be installed between the Sheberghan Power Plant and Sheberghan substation. This shall be either an optical cable buried in ducts the whole distance or optical ground wire (OPGW) on the overhead transmission line coupled with interconnecting buried optical cable at each end. The cable shall contain at least twenty four (24) fibers. The Contractor is responsible for connecting this link into the patch panel in the equipment room at the Sheberghan substation.

10.4 FIBER OPTIC CABLE

The fiber and cable specifications shall comply with ITU-T Recommendation G.652 and the relevant IEC standards. Each fiber cable shall be supplied with at least 50% spare cores after all systems have been commissioned.

Outdoor optical fiber cable shall be of loose tube, gel filled construction and shall be installed in HDPE cable ducts or direct buried in plastic conduit. The cable shall have a non-metallic central core sheathed with black polyethylene. An armored layer shall surround the inner sheath made up of corrugated steel or aluminum tape at least 0.2mm thick followed by an outer polyethylene sheath.

Indoor optical fiber cable shall be of tight buffered construction and shall be installed in cable ducts or on cable ladder. The cable shall have a non-metallic central core sheathed with black polyethylene. A non-metallic strength layer shall surround the inner sheath followed by an outer polyethylene sheath.

Single mode optical fiber cables shall be designed to optimize transmission of light at both the 1310 nm and 1550 nm wavelengths. The core/cladding diameters shall be 9/125 μm.

Multi mode optical fiber cables shall be designed to optimize transmission of light at the 850 nm wavelength. The core/cladding diameters shall be 62.5/125 μm.

10.5 FIBER CABLE JUNCTION BOXES

Fiber optic cable junction boxes shall provided where cables need to be joined. Junction boxes shall:

- Support, organize, and protect the optical fibers and the fiber splices while ensuring that the optical fiber minimum-bending radius is not exceeded

- Have no sharp edges or protrusions that may damage the optical fiber cable
- Provide entry for all cables
- Include number tags for tube and fiber identification
- Be rated to IP65 in accordance with IEC 60529
- Be lockable

The Junction box shall be mounted on the wall or pedestal at a conveniently accessible height.

10.6 PATCH PANELS

Fiber optic cable termination patch panels shall provided where multifiber cables are broken out to connect to different equipment. Patch panels shall:

- Support, organize, and protect the optical fibers and the fiber splices while ensuring that the optical fiber minimum-bending radius is not exceeded.
- Have no sharp edges or protrusions that may damage the optical fiber cable
- Provide entry for all cables
- Include number tags for tube and fiber identification
- Provide mounting positions for the bulkhead FC/PC type connectors on which the cable will be terminated
- Allow patching of fibers

The patch panel shall have a fiber capacity equal to the total number of fibers (connected and spares) for all cables to be connected. Patch panels shall be designed for 19-inch rack mounting within a standard equipment cabinet.

All unused couplings shall have protective dust covers. The patch area shall be accessible behind a door or removable cover.

Sufficient factory manufactured patch cords with suitable color coding shall be provided.

10.7 FIBER CONNECTORS

All optical connectors shall be field installable and perfectly matched to the cable used. The connectors shall provide tight fitting termination to the cladding and buffer coating. Epoxy based or “hot melt” adhesives shall be used to bond the fiber and buffer to the connector ferrule and body prior to polishing the end face. No dry-termination or “quick crimp” connectors are allowed.

After termination with connectors, the fiber ends must be visually inspected at a magnification of not less than 100 to check for cracks or pits in the end face of the fiber. If any irregularities found cannot be removed by further polishing, the entire process must be redone by cutting off and disposing the connector body.

Connectors shall have a maximum allowable connection loss of 0.3 dB per mated pair, as measured per EA.-455-34, without use of index-matching gel (dry interfaces only). Single mode connectors shall be capable of field installation on 9/125 micron fibers with 900μm (OD) buffers.

Each connector shall be of the industry standard FC/PC type, designed for single mode or multimode tolerances, and shall meet or exceed the applicable provisions of EA.-455-5, 455-2A, and 455-34, and shall be capable of 100 repeated matings with a maximum loss increase of 0.1 dB. Connectors shall incorporate a key-way design and shall have a zirconium ceramic ferrule.

Connector bodies and couplings shall be made of corrosion-resistant and oxidation-resistant materials, such as nickel plated zinc, designed to operate in humid environments without degradation of surface finishes.

Where a termination enclosure is installed, all fibers of all cables are to be terminated on “pigtails” with a minimum length of 1 m.

The pigtail shall be a Kevlar® reinforced and plastic coated optical fiber conforming to ITU T Recommendation G.652. An FC/PC type connector shall terminate the pigtail.

The connector shall be inserted on the cable side of the bulkhead (feed through) connector in the termination enclosure.

All connectors shall be supplied with a removable cap to protect against moisture and dust ingress when not connected.

10.8 NETWORK HARDWARE

10.8.1 LAN/WAN

The local area network (LAN) and site wide area network (WAN) shall have dual redundant network cabling. It shall have a minimum transmission speed of 100Mbps (IEEE 802.3u) using Cat 5e UTP (100BaseTX) or fiber optic (100BaseFX) cabling within a building, and fiber optic (100BaseFX) cabling between buildings.

A single ring LAN/WAN topology is acceptable provided communications to any device is not disrupted by a single break in the ring, and any break in the ring is immediately reported as an alarm. Each path of duplicated WAN cabling between buildings shall be run via a separate route.

Depending on the control system hardware, a lower level dual redundant Process Control Network (PCN) may be provided based on the control system vendor technology.

10.8.2 BRIDGES, HUBS, SWITCHES, ROUTERS

Bridges, hubs, switches and routers shall have at least four spare ports. Network interface hardware shall have sufficient processing capacity and bandwidth to cater for peak throughput without slowing network traffic.

Network equipment shall be of the industrially hardened type and shall be capable of continuous operation under the site environmental conditions.

All LAN/WAN network equipment installed on site shall obtain power either from the DC battery system or from UPS supplied AC.

10.9 PROTECTION SIGNALING

Protection relays at the Power Plant will require protection signaling channels for inter-trip etc. and these shall be transported via the communications link.

Alternatively the overhead line may have end-to-end differential protection that communicates on its own fibers over the fiber optic cable.

10.10 ENGINEERING NETWORK

Access to the engineering ports of protection relays and other IEDs shall be provided via IP link over the external data connection.

10.11 SDH NETWORK

10.11.1 GENERAL

The primary optical network connecting substations and power stations with the NLDC shall be based on Synchronous Digital Hierarchy (SDH) equipment using multiplexed channels on STM-1 (155 Mbit/s) links for data, telephony and protection signaling. The SDH equipment at each site shall be linked via optical fiber cable on the transmission lines (generally OPGW).

10.11.2 NETWORK SERVICES

An SDH Terminal Multiplex shall provide at the Power Plant and shall provide the following services:

- *Telephone Network*—Two telephone digital trunk links transported over the SDH network as 2Mbit/s E1 channels.
- *SCADA Data*—Digital communications shall be provided to connect the Remote Terminal Unit (RTU) of the Station Control System with the Network Control Center (National or Area Load Dispatch Center). 10 Mbit/s IEEE 802.3 Ethernet data links shall be provided over the SDH. In addition, asynchronous serial links shall be provided for other equipment that may need interconnection. A link to the substation RTU shall be provided.
- *Teleprotection*—Digital teleprotection circuits shall be provided on the SDH network for all transmission line protection as described elsewhere. Alternatively, line protection may use independent fibers depending on the Contractor’s design.

10.11.3 PERFORMANCE

The technical requirements of the equipment specified for the communications network shall be based on ITU-T Recommendations and other international standards.

Error performance objectives shall comply with ITU-T Recommendation G.826.

10.12 SDH MULTIPLEX EQUIPMENT

10.12.1 GENERAL

Digital multiplex equipment shall be provided to perform the necessary multiplexing between 2 Mbit/s and 34 Mbit/s tributaries at each site. The digital multiplex equipment shall also provide the optical interfaces to the fiber optic cables between the various sites. The digital multiplex equipment shall be in accordance with the latest ITU T Recommendations for SDH equipment, namely: G.703, G.707, G.708, G.709, G.781, G.782, G.783, G.784, G.803, G.811, G.823, G.825, G.957 and G.958.

10.12.2 INTERFACES

The types of interfaces required are:

- STM 1 Optical
- n × 2 Mbit/s

The characteristics of the multiplex interface shall conform to the ITU T Recommendations for systems operating at 155 Mbit/s or 52 Mbit/s, namely:

- G.709 for mapping and de-mapping
- G.708, G.783 for MSOH and RSOH insertion and extraction
- G.708 and G.709 for POH generation and termination
- G.709, G.783 for pointer generation and interpretation
- G.708 for multiplexing
- G.709 for scrambling and de-scrambling

10.12.2.1 STM-1 Optical Interface

Optical interfaces shall be provided for connection to the fiber optic cable between the various sites. In addition to the general requirements listed above, the STM-1 Optical Interface shall conform to the requirements listed in ITU-T Recommendation G.957.

The interface shall operate at a nominal optical wavelength of 1550 nm and be suitable for operation over the required distances. The optical fiber on these routes shall conform to the ITU T Recommendation G.652. For each link, the optical interface with the lowest transmitter output power that still meets the performance objective shall be supplied.

The STM 1 Optical Interface card shall include flexible patch cords to connect the optical interface to a patch panel. The patch cords shall be terminated at the patch panel end in Type FC/PC connectors. These connectors are also preferred for the STM 1 Optical Interface.

10.12.2.2 n × 2 Mbit/s Interface

2 Mbit/s interfaces are required at each site to connect to primary multiplex equipment. Each interface card should accommodate at least 4 × 2 Mbit/s interfaces to provide the immediate requirement together with spare capacity for future growth. All 2 Mbit/s interfaces shall conform to the ITU T Recommendations:

- G.703 section 6 for electrical characteristics. The 120 Ω balanced pair option shall be used.
- G.704 for functional characteristics
- G.823 and G.783 for output jitter and jitter tolerance

The 2 Mbit/s interfaces termination shall be 120 Ω balanced

10.12.3 SYNCHRONIZING

If a Primary Reference Clock for the synchronization of the SDH equipment is required, it shall be installed at the same location as the network management system and comply with ITU T Recommendation G.811.

Each multiplexer shall have the ability to choose the timing source between external timing, incoming STM 1 signal (155 Mbit/s) or incoming 2 Mbit/s. The order of priority in which these sources are chosen shall be programmable by the Owner.

The synchronization architecture shall conform to the recommendations in ITU T Recommendation G.803 section 6. Where required according to G.803, the Contractor shall provide slave clocks compliant with ITU/T Recommendation G.812. Also, the synchronization using the ring shall be configured in such a way that synchronization is not lost to any loop node with any single break in the ring.

The SOH (Section Overhead) bits Z1 (b5 b8) shall be used to carry synchronization status messages as defined in the ITU T Recommendation G.708. These status messages shall determine the source of the clock during normal and abnormal operation and shall be used to provide a robust synchronization network as described in ITU T Recommendation G.803 section 6.2.7.

Each multiplexer shall be provided with a synchronization output interface conforming to ITU T Recommendation G.703 section 10.

10.12.4 JITTER AND WANDER

The jitter tolerance on the STM 1 interfaces (155 Mbit/s) shall be in accordance with the ITU T Recommendations G.825 and G.958. The output jitter shall be in accordance with ITU T Recommendations G.783, G.825 and G.958. The jitter transfer function shall be in accordance with ITU T Recommendations G.783 and G.958.

10.12.5 CHANNEL ASSIGNMENT

The multiplex supplied in the Contract shall be configured by the Contractor to provide the specified reliability for the various types of services.

The Contractor shall submit detailed multiplex design / channel assignment information to the Owner’s Representative for approval prior to commencement of manufacture.

10.12.6 INSTALLATION

The multiplex equipment supplied in the Contract shall be installed and tested by the Contractor. Following this testing, the equipment shall be subjected to an availability test to prove compliance with the ITU T Recommendation G.826.

10.12.7 CONTROL OR SERVICE TERMINAL

Each network element shall be provided with an ‘F’ interface to allow maintenance staff to locally interface to the network element with a handheld terminal or portable computer.

The maintenance technician shall be able to access locally all the information on alarms, settings and statistical information from each network element at the site. He shall also be able to change all software settings. The procedure for updating these software settings shall be designed to minimize the risk of the maintenance technician causing an inadvertent malfunction of the equipment.

11.0 SUPERVISORY CONTROL AND DATA ACQUISITION (SCADA)

11.1 INTERFACE TO THE FUTURE NETWORK CONTROL CENTER

An interface shall be provided to connect to the future Network Control Center (National Load Dispatch Center). This shall be achieved by either providing a physical RTU or by providing a virtual RTU within the Station Control System. Connection to the Network Control Center will be by 10 Mbps Ethernet over the SDH communications system.

It shall be possible to fully remotely control and monitor the Power Plant from the future Network Control Center.

The SCADA interface shall support both, and be equipped with at least one, of the following data communications protocols for the remote communications:

- IEC 60870-5-101/104
- DNP 3.0 (Level 3 implementation)

11.2 MINIMUM SCADA INTERFACE SIGNALS

The following remote interface signals shall be provided as a minimum:

Digital inputs:

- Control status per generating set (local/remote control)
- Operating mode per generating set (shutdown, starting, on line, stopping, synchronous condenser, spinning reserve, tripped etc.)
- Generator circuit breaker open/closed status (2 bits/CB)
- Grid interface circuit breaker status (2 bits/CB)
- Grid interface disconnector status (2 bits/disconnector)
- Station alarms (combined urgent, combined non-urgent)
- Gas plant alarms (combined urgent, combined non-urgent)

Digital outputs (commands):

- Start/stop/emergency stop per generating set
- Raise/lower generation per generating set
- Raise/lower excitation per generating set

Alternatively if the station is equipped with a joint controller then the remote control interface for AGC may in addition be analog outputs:

- Station MW set point

- Station MVAr set point

Analog inputs:

- Station net MW (import and export)
- Station net MVAr (import and export)
- Gross MW per generating set
- Gross MVAr per generating set (import and export)
- 1 active energy counter – station import and export
- 1 reactive energy counter – station import and export
- 1 station bus voltage (selection per phase)
- 1 station frequency
- Fuel flow per unit

12.0 ELECTRICAL SYSTEMS

12.1 GENERAL

The generation voltage shall be 11 kV and the output terminals of each generator shall be connected to an 11 kV bus via a generator circuit breaker as shown on the station single line diagram drawing No.102864634-1512.

Synchronization of each generator shall be carried out at the generator circuit breaker.

The 11 kV bus shall be split into two sections by a bus section circuit breaker and each section shall be connected to the transmission system via an 11/110 kV generator step-up transformer.

Preliminary calculations indicate that the fault level on each section of the 11kV bus will be approximately 46 kA and it will be necessary to operate with the bus section breaker open when more than 50 MW is being generated.

110kV has been selected as it is the voltage of the existing substation. Construction of double circuit 220kV line is intended in the future from Sheberghan to Mazar-e-Sharif, but it will not have any effect on the choice of power plant transformer.

12.2 SCOPE OF SUPPLY

The electrical systems scope of supply shall include, but not necessary limited to the following:

- GT and/or engine generators complete with excitation and AVRs
- 11/110 kV generator, transformer, and line protection
- 110 kV line bays (no CB)
- 11 kV switchboard in two halves with bus tie
- 2 off 11/0.415 kV auxiliary transformers
- 2 off 11 kV bus earthing transformers
- 400 V switchboard
- DC and UPS supply system for engine, plant, and switchyard control
- Plant safety earthing system
- Cables, cable trays etc for installation
- 500 m (approx) 110k V transmission line to the Sheberghan substation
- 2 off-line bays in the Sheberghan substation including circuit breakers, disconnectors, CTs, VTs, and possibly an extension to the 110 kV busbars.
- Repair of overhead 110 kV transmission line Sheberghan to Mazar-e-Sharif, currently missing conductors for approximately 30 km

12.3 GENERATORS

12.3.1 IEC PUBLICATIONS

The manufacture, erection and testing of the generators shall comply with the latest revision of the following IEC publications, except where otherwise stated.

12.3.2 RATING AND CAPABILITY

The generator to be supplied shall be guaranteed with “readiness” factor not less than 0.995 determined on faultlessness generating time of 18,000 hours and capacity of four starts within one day. Duration between the planned maintenances shall be not less than six years and operating life shall be not less than 50 years.

The generator shall have the following main ratings:

Rated voltage (phase-phase), U	11 kV
Limitation of voltage changed from rated voltage, ΔU	±10%
Number of phases	3
Rated power factor, Cosφ	0.80 lagging
Rated frequency	50 Hz
Limitation of frequency change from rated frequency, Δf	±1%
Phase connecting between stator windings	Wye (Y)
Short-circuit ratio	> 0.5
Insulation of stator/rotor windings	Class F
Temperature rise limit in operation	Class B

Insulation of the windings of generator shall be classified as Class F. With the turbine at the rated design output as defined in IEC 60085 and 0.80 power factor, the temperature rise shall not exceed the limit for Class B insulation as defined in IEC60085. At 0.80 power factor and with the turbine at the continuous emergency output the winding temperature rise shall not exceed that for Class F insulation.

12.3.3 GENERATOR OUTPUT REQUIREMENTS

12.3.3.1 Grid Voltage Range

The generator shall at all times be capable of being operated, and continue to operate, when the 110kV grid is operated within the range of +/- 10% of the nominal grid voltage.

12.3.3.2 Voltage Support

When synchronized, the generators shall continuously operate in a manner that supports voltage and voltage stability.

The generators shall at all times, when synchronized and available for dispatch by the system operator, be capable of continuously:

- Exporting at full load rated net reactive power output corresponding to a power factor of 0.80 lagging when the voltage at the grid injection point is within the allowable range of nominal voltage
- Importing at full load rated net reactive power output corresponding to a power factor of 0.90 leading when the voltage at the grid injection point is within the allowable range of nominal voltage

12.3.4 EFFICIENCY AND LOSSES

The losses and efficiencies of the generator shall be determined in accordance with IEC 60034-2 and shall include all losses including losses in active iron, additional no-load losses, load losses, excitation circuit losses, air resistance losses, generator thrust and guide bearing and additional losses.

The efficiencies and losses of the generators shall be indicated in the technical data sheets at a rated power factor of 0.80 and a power factor of 1.0.

The separate losses shall be measured during commissioning in accordance with IEC 60034-2 and used to determine the generator efficiency for the purpose of verifying efficiencies by test.

Losses and efficiencies of the generator shall be determined at rated power output, voltage, frequency and load losses calculated from the rated current and measured resistance, corrected to a reference temperature of 75 ºC.

12.3.5 PERFORMANCE GUARANTEES

12.3.5.1 Output

The Contractor shall guarantee the rated output at the terminals of each generator.

12.3.5.2 Temperature Rises

The Contractor shall guarantee the limits of temperature rises indicated in Clause 12.3.6.

12.3.5.3 Allowable Vibrations

The generator shall operate without excessive vibration; the vibration RMS velocity measured on the bearing supports shall not exceed 2.3 mm/s RMS as specified by ISO 10816 – 3, Green zone, new machine condition for large machines (Group 1) on a rigid foundation. Below 5 Hz vibration frequency range, which is not considered by the standard, the displacement amplitude shall not exceed 40 microns (one half of amplitude).

The allowable amplitude of vibrations (with the frequency oscillation of 100 Hz at any changes in the symmetrical load) shall not exceed following limitations:

- Stator coil 0.03 mm
- Connection ends of the stator conductor in the centripetal direction and tangent shall not exceed 0.1 mm.

The frame of the generator shall be capable of withstanding the radial component of stresses that may arise in the event of rotor running out of true up to a distance equivalent of 10% of the air-gap of the generator under the most adverse conditions.

12.3.6 TEMPERATURE LIMITATION

Permitted temperature of the generator parts shall be within the limits shown in Table 8, with method of measurement in accordance with IEC 60034.

TABLE 8 PERMITTED TEMPERATURES FOR GENERATOR PARTS

PARTS	MAXIMUM TEMPERATURE
Stator (temperature measured by embedded temperature detectors between coils in slots)	
Core	125 ºC
Windings	125 ºC
Generator bearings	
Bearing pads	80 ºC
Oil	60 ºC

12.3.7 REACTANCE AND TIME CONSTANTS

The guaranteed short circuit ratio, reactance and inertia constant of the generator shall be as stated in the technical data sheets and shall be determined from the results of specified tests in accordance with IEC 60034-4.

12.3.8 NEGATIVE PHASE SEQUENCE CAPABILITY

The Contractor shall provide details of the negative phase sequence capability of the generator, preferably in the form of a capability curve. The continuous value of negative phase sequence current and the I^2t value which the generator can withstand shall be stated in the Tender.

12.3.9 WAVEFORM

The line-to-line voltage waveform of the generators at rated voltage shall be in accordance with IEC 60034. No harmonic in the waveform shall exceed 5% of the amplitude of the fundamental component.

12.3.10 SLIP RINGS AND BRUSH GEAR

The slip rings and brush gear shall be arranged to permit convenient access for maintenance. Brush-holders shall be arranged for easy access to all brushes and brush pressure shall remain uniform as the brushes wear. It shall be possible to adjust brush pressures while the generator is on load.

All insulation for the slip rings and their connections shall be non-hygroscopic and oil resistant.

12.3.11 WINDINGS

12.3.11.1 Generator Stator Windings

The stator winding shall be star connected with phase and neutral leads brought out and made accessible.

The stator winding, end connections, parallel connection rings, phase and neutral leads, coil support system, slot packing wedges, etc, shall be class F insulation, as defined in IEC standards, and shall be capable of withstanding successfully, dielectric tests in accordance with these standards. The application of tape to coils, end connections, and parallel connection rings shall be performed in a neat, workmanlike manner, with care being taken to ensure that tape is tight and well bonded with no voids or pockets left which may be subject to attack by corona or which may trap foreign material harmful to the insulation. The insulation material shall be continuous, multi-lapped and be the glass-supported, pre-impregnated, non-polyester type mica-tape. The bar insulation shall be bonded with a thermosetting resin. The resin shall be cured by a vacuum and pressure process to eliminate void formation during the life of the insulation and to ensure uniformity of the slot portion of the bar. The bar ends shall be furnished with a voltage grading system which shall effectively eliminate surface discharge at normal operating voltage.

The stator coils shall be adequately supported and braced to withstand the full electrical and mechanical forces or stresses developed due to electrical fault conditions. Adjacent coil ends shall be held apart by spacers and bound to each other. Cording used to hold coils in position shall not be continuous, i.e., each coil shall be tied separately. The support rings to which the coils are lashed and supported shall be made of nonmagnetic metal with class F insulation. The support ring shall have a drain wire connection.

The stator coils, when installed, shall be a reasonably tight fit in the slots. A coil rejected because of slot fit shall not be used unless rebuilt.

The stator coils shall be tightly wedged in the slots with wedges that will not buckle or shrink. The insulation shall be continuously applied over the in-slot and end-turn portions of the stator windings and shall be of class F materials to IEC 60085 impregnated with thermo-setting resin. Satisfactory evidence of the Contractor's experience in this construction shall be submitted with the Tender. Windings with wrapped insulation of the slot portion joined to taped insulation of the end- turns will not be accepted.

Interconnection of the windings and circuit rings shall be by silver brazing with brazen connection box.

The packing shall be effective in both the circumferential and radial directions. When installed, the coil sides shall be tight within the slot so that a 0.05mm feeler gauge will not enter any gap between the coil and slot sides. The 0.05mm feeler gauge 'no-go' standard shall apply to at least 90% of the stacked core length, providing the remaining 10% has individual 'go' lengths of less than 80mm. It is recommended to use coated (conducting) epoxy glass bonded laminates (ripple spring packing) to provide radial force on the coils. After final wedging, there shall be no measurable radial clearance between the coil and slot or wedge. Slot wedges shall be of glass-reinforced polyester or epoxy material, highly resistant to thermal aging and designed to minimize any tendency to relax the radial pressure exerted on the coils.

The stator coils, including spares shall be manufactured to fit the stator core and end connection requirements such that a minimum of deformation will be necessary during their installation.

The stator coil insulation, wedging, packing, bracing, and tying shall be such as to minimize the effect of thermal shock.

The insulation of the stator coils shall be sufficiently durable so that in case it is necessary to remove coils, removal and replacement may be effected without damage to the insulation of any of the other coils. The quality and life of the insulation shall not be impaired in attaining the above requirements.

During assembly of the generators, silver brazing connections of windings shall be quality checked by voltage test in accordance with the approved manufacturer's program.

12.3.11.2 Generator Rotor Windings

The insulation of the generator rotor windings shall be Class F in accordance with IEC 60085. Rotor winding to earth insulation shall be resin bonded glass fabric laminated sheet to NEMA LI-1 Grade GPO-3 or equivalent. The insulation between turns shall include thermosetting resin, which during manufacture of the winding shall be cured under a pressure not less than the pressure that occurs in the winding at rated speed.

The design and construction shall be such that adequate creepage distance is provided at all points between the rotor winding and earthed metal and reinforcing films or barriers shall be provided at the concealed creepage points of the pole windings. As far as possible, the insulation quality of the machine shall not be affected by accumulations of dust as a result of normal operation.

The windings and insulation, including the interconnections between pole windings and the connections to the slip rings shall be adequately supported to prevent mechanical damage and loss of insulation quality due to stresses from centrifugal forces up to the design runaway speed, or from vibration and thermal stresses.

Each rotor shall be provided with a continuous damper winding and the inter-pole connections shall be adequately supported to prevent permanent distortion at runaway speed. The damper winding shall be provided to improved stability and to reduce higher harmonic voltages under conditions of unbalance fault. The winding shall be of low resistance and rigid construction. The damping ring shall consist of hard drawn copper with silver plated contact surfaces.

Adequate provisions shall be made both for static and dynamic balances of the rotor so as not to cause any vibration.

Rotor windings shall be numbered to separate poles clearly in accordance with IEC 60034-8.

12.3.12 GENERATOR HEATERS

Each generator shall be provided with shrouded electrical heaters suitable for 400 V, three-phase, three-wire power supply with a capacity to maintain a temperature inside the generator enclosure at 5 °C above the station ambient temperature. The heaters shall be switched on automatically whenever the machine is stopped and switched off automatically whenever the machine is started.

When the heaters are switched on they shall be thermostatically controlled to achieve an enclosure temperature of between 5 °C and 10 °C above station ambient temperature.

12.3.13 MISCELLANEOUS INSTRUMENTS AND DEVICES

12.3.13.1 Temperature Detection

Three resistance temperature detectors (RTD) (three-wire Pt100 type) shall be installed at each of the appropriate measurement locations in the stator winding and stator core. One shall be connected to a 4-20 mA transmitter and connected to the DCS via the unit controller for monitoring and trending, the second shall be used as an input into a dedicated temperature monitoring relay and the third used as a spare. The temperature monitoring relay shall be a two stage device, with separate adjustable time delay for each stage. The first stage shall be arranged to provide an alarm signal to the unit control while the second stage shall be used to trip the unit.

Stator windings shall have at least two measuring locations per phase. The RTDs shall be installed in the separator between stator bars of the same phase and in the hottest axial location.

The stator core shall have three sets of measuring locations equally spaced circumferentially with each set made up of two axially placed measuring locations in the stator core and stator teeth.

Each guide bearing shall have two RTDs installed to measure the temperature of the bearing metal.

The oil reservoir of each bearing shall have two RTDs installed to measure the bearing oil temperature.

The cooling system shall have RTDs to measure temperature as required.

12.3.13.2 Vibration Detection

A vibration detections system shall be provided to indicate vibration levels within the generator, and provide protection /alarm in the event of excessive vibration.

12.3.13.3 Air Gap Sensors

Air gap sensors shall be provided to dynamically monitor the generator rotor / stator air gap under operating conditions.

12.3.14 EXCITATION SYSTEM

12.3.14.1 Type and Performance

A complete excitation system of digital type, including a high-speed automatic voltage regulator shall be supplied for each generator.

A rotating brushless excitation is preferred, if static excitation is provided then excitation shall be derived from the generator output via an excitation transformer.

The excitation system main data shall be as follows:

Rated exciter voltage	Corresponding to generator continuous rated load and rated field voltage at PF 0.80 lagging.
Rated exciter current	As produced by the rated exciter voltage in the generator field winding.
Range of manual adjustment of reference value for automatic voltage regulation at least	25% (at no load) to 110% (at maximum load) of rated generator voltage; upon shutdown, automatic set point shall reset automatically to 95% of no-load excitation.
Range of adjustment of line drop compensation	10%
Range of adjustment of reactive current depending drop	10%
Excitation control system accuracy	Better than 0.5% of rated generator voltage
Accuracy of the excitation system to control the output voltage to the set point value from no-load up to full-load operation.	0.5%
Excitation system voltage response time not greater than	0.1 sec
Excitation system ceiling voltage not less than	160% of rated load field voltage
Excitation system ceiling current not less than	160% of rated load field current
Excitation system voltage response ratio	To be selected by the Contractor
Maximum time for de-excitation of the generator to zero voltage under fault conditions	1.0 sec

The excitation system shall be capable of providing at least 10% higher voltage and 20% higher excitation current over the rated values, as required for the generator operation under rated conditions.

The excitation system shall as a minimum be supplied with, but not limited to the following:

- DC field interrupting device
- Field suppression equipment
- Shaft voltage suppressor to limit shaft voltage to ground to prevent damage to bearings
- Field flashing
- Reactive current compensation to permit sharing of reactive load between parallel units or to permit line drop compensation to control voltage at some point remote from the generator terminals
- Rotor earth fault detector
- Loss of excitation protection
- Potential transformer fuse failure detection
- Transfer to manual mode on loss of PT signal
- Rotor temperature indication with alarm indication at set point.
- Under excitation limiter
- Volts per hertz limiter
- Over excitation limiter
- Volts per hertz protection
- Over excitation protection
- Stator current limiter
- Power system stabilizer

The excitation system shall control the field voltage of the generator so transient changes in regulated voltages are effectively suppressed, and sustained oscillations in regulated voltages are not produced by the excitation system during steady load conditions, or following a change to a new steady load conditions.

The automatic voltage regulator (AVR) controlling the DC voltage for the main exciter field winding shall be of the electronic type and employ three-phase sensing.

The field flashing equipment shall be rated to supply adequate field current sufficient to ensure consistent, stable and self-sustaining firing of the excitation thyristor bridges. The Contractor shall also provide the means, and any additional equipment required, to permit the energization of the excitation equipment from an external temporary source with output of up to 1.2 per unit field-current, continuously adjustable in 10% steps from 10% to 100% generator output voltage, to conduct generator saturation and impedance curve tests during commissioning.

The excitation system shall be required to give the following performance:

- It shall maintain the generator voltage stable and equal to the value determined by the voltage setting device, as modified by the impedance drop compensator when the generator is operating on the system or is separated from the system.

- With the impedance drop compensation set to zero, the maximum variation in generator terminal voltage when the operating conditions change from no load to rated generator output shall not exceed 0.5%.
- In the event of an increase in generator frequency up to that corresponding to the maximum speed rise resulting from the loss of the generator load, the excitation system shall remain stable and it shall rapidly restore the voltage to normal.
- During transient disturbances such as short circuits on the high-voltage system, the excitation system shall be capable of functioning correctly and, in addition, providing increased excitation if required. The excitation system shall ensure the generator can supply sufficient fault current should the generator terminal voltage become depressed during a fault to ensure generator backup protection operates to trip the generator circuit breaker for an un-cleared system fault. The generator protection shall coordinate with down stream protection to ensure there is proper discrimination for system faults.
- The excitation system ceiling voltage shall not be less than 1.6 times the voltage corresponding to rated terminal voltage at rated generator output and 0.80 power factor, over or under excited.
- In case of rapid changes in unit output due to governor action, changes in the generator terminal voltage due to the action of the stabilizing feedback signals shall be limited to not more than 2% when the generator is connected to the power system.
- Transient voltage surge protection on the AC and DC buses
- A current limiting device shall be provided which will act to reduce excitation so that generator field temperature is maintained within allowable limits and protect the rectifiers in the event of sustained under-voltages on the system; the over-excitation limiter shall have instantaneous and time-delay elements, the former set at the ceiling current and the latter set at the rated continuous current of the excitation system
- Circuitry to determine field winding temperature from calculated values of field current based on measured rectifier control values
- If three or less parallel circuits are provided within the rectifier, the loss of thyristor conduction supervisory equipment, mentioned above, shall provide a signal to reset the maximum excitation limiter at a lower value than the normal limit and permit 30 seconds of field forcing at a lower ceiling current.
- An over-current suppression circuit to prevent the rectifier from firing in the event of a short circuit or severe over-current in the DC bus
- All necessary instantaneous and inverse time over-current relays and thermal relays necessary to fully protect the excitation equipment and its associated generator field circuit against damage resulting from any fault which may be encountered in service

12.3.14.2 Automatic Voltage Regulating (AVR) Equipment

The AVR shall be provided with adjustable min and max excitation limiters, which allow for the safe and stable operation of the unit even at its limit of over and under-excitation. The limiters shall act on the firing angle of the SCRs. It shall be possible to adjust the operating curve of the limiters to match as close as possible to the capability curves of the generating unit. By the occurrence of instantaneous line voltage dip or by external short circuits, the over-excitation limiter shall not actuate for about one second, in order to allow for the correct forcing of the field current.

Electronic reference adjusters shall be provided for raise/lower set points. Adjusters shall have adjustable minimum and maximum position set points and an adjustable starting pre-position set point. Adjusters shall have output contacts to indicate if pre-position is achieved. Adjusters shall automatically move to starting pre-position points upon excitation being turned off. Starting logic shall include that the adjusters are in their preposition points before the excitation can start.

12.3.14.3 Field Suppression

Solid state field suppression equipment shall be provided to rapidly reduce the excitation of the generator to zero in response to a trip signal or a circuit breaker open signal. The field suppression equipment shall operate independently of the excitation control equipment.

The field suppression equipment shall protect the excitation system and the generator field by use of a crowbar circuit to limit positive and negative over-voltage surges due to induced field current during short circuit transients and pole slipping events.

12.3.15 NEUTRAL EARTHING EQUIPMENT

The overall earthing requirements shall be designed for the complete station such that the earth fault contribution through a generator shall be limited to a value of about 10A. A remotely operated disconnector shall be included if the number of earth paths is to be limited with multiple generators on line at one time. The earthing shall be coordinated with the earthing transformers to be provided on the 11kV bus bars to provide an earthing system which minimizes earth fault damage to the generator, but provides adequate current for protection discrimination.

12.4 11 KV SWITCHGEAR

The equipment shall comply with the requirements of the appropriate IEC standards and comprise a metal enclosed, free-standing switchboard suitable for indoor application, dust and vermin proof and suitable for co-ordination with a 11 kV, three-wire system.

Design of the switchgear shall allow good accessibility with maximum personnel safety during operation, inspection and maintenance. Also maximum segregation shall be afforded between cubicles and between high and low voltage sections within the cubicles.

Where required, the switchboard shall be complete with all necessary contacts, transducers etc to provide full compatibility with the system SCADA.

Provision shall be made for future extension of the switchboard at either end.

The three, phase busbars shall be installed in a conventional manner and shall be completely screened in a chamber running the length of the switchboard. Busbars shall be fully insulated busbars along their entire length with high dielectric strength sleeving.

Inter-panel connections shall be via insulated barriers designed to preserve an effective seal between cubicles under the most severe arcing fault conditions.

The circuit breakers shall be preferably of the vacuum or SF6 type, carriage mounted for horizontal withdrawal. They shall be spring operated with a 230 V AC single-phase motor for charging the springs. The springs shall also be able to be manually charged. The circuit breaker closing the tripping coils shall be 110 V DC. The operating mechanism shall be trip free. All circuit breakers shall have a minimum rating of 630 A and shall be fully interchangeable between similar circuits.

A mechanical means shall be provided to show whether the circuit breaker is open or closed. Electrical/mechanical interlocks shall be provided to ensure that:

- The circuit breaker may only be withdrawn when open.
- The circuit breaker may only be restored to the service position when open.

Auxiliary contacts, including 2-n/o and 2-n/c spares, shall be provided and wired out to terminal blocks, to be used for remote indications. Provision shall be made for operating the circuit breaker in the withdrawn position for test or maintenance purposes.

The circuit cubicle shall be equipped with a door at the front that shall support the circuit breaker on its carriage when withdrawn into the maintenance position. The door shall have a window through which the circuit breaker condition indicator and mechanical open/closed indicator are viewed. The insertion or withdrawal of the circuit breaker from the service position shall be carried out with the door closed by means of a racking mechanism indicator operated by the racking mechanism and visible on the front panel of the racking mechanism.

The circuit cubicle shall be arranged so that the busbars and circuit connections are completely screened when the circuit breaker is withdrawn. Automatic shutters shall be operated by the circuit breaker truck to screen both the busbar and circuit fixed contacts when the circuit breaker is withdrawn. The shutters shall be clearly labeled “BUSBARS” and “CIRCUIT” and provided with means for padlocking in the closed position.

The high voltage cable termination compartment shall be equipped for the termination of the cable cores of the three phase circuit connections.

This surge arrester cubicle shall be equipped with three 12 kV surge arresters connected between each phase of the busbars and the earth bar.

A surge arrester shall be provided with a counter able to be read from the front panel of the cubicle.

Current transformers shall be mounted in the cable compartment and shall be of the insulated bar primary type unless otherwise approved. Secondary windings shall be earthed at one point only and means shall be provided to short circuit these windings. All necessary terminals and rating plates shall be provided and characteristic curves shall be submitted for each current transformer.

Voltage transformers shall be single phase units, for three phase applications three single phase units shall be connected in star. Class 0.5 shall be provided for measuring applications and class 3P for protection.

An earth busbar shall be run internally through the length of the switchboard. All non-current carrying metalwork earth switches, surge arresters, CT and VT secondary circuits, etc shall be bonded to this earth busbar. A fixed/moving contact arrangement shall be provided for the positive earthing of the circuit breaker carriage.

Each circuit cubicle shall be provided with an integral fault making earthing switch for the safe and effective earthing of the ‘circuit’ connections. In addition, the surge arrester cubicle shall accommodate an equivalent earthing switch for the earthing of the busbars. The earthing switches shall be interlocked with their associated circuit breakers. The earthing switches shall be manually operated from the front of the switchgear panel

12.5 MAIN TRANSFORMERS

12.5.1 GENERAL

Two 11/110 kV station transformers shall be provided and each shall have a rating of 75 MVA ONAF (rating achieved by natural air cooling). The transformers shall be capable of having forced air cooling (ONAF) added in the future if required.

The 11 kV/110 kV transformers shall be suitable for outdoor installation in the ambient conditions stated in this specification and shall fully comply with the requirements of IEC 60076.

The transformer shall be fitted with an on load tap changer (OLTC) having a separate diverter and changeover tank to separate its oil from that of the main tank. Tap range shall be at least +/- 15%.

The OLTC shall comprise a tap selector with changeover switch and a rotary diverter switch of high-speed transition resistor type. The OLTC shall be in conformity with IEC 60214 and IEC 60542. Only designs that have been type tested in accordance with the relevant IEC standards will be accepted.

The OLTC shall be mounted from the cover into the transformer tank at narrow sides of the transformer tank. The diverter switches and/or selector switches shall have oil compartments separate from the transformer oil as well as their own closed sub-sections in the oil conservator.

The tap changer head shall be equipped with a bleeding duct to be connected to Buchholz relay of main tank to avoid any gas collection underneath the tap changer head outside the diverter switch compartments. No piping or other equipment shall be arranged beyond the tap changer head to allow lifting of the diverter switches and/or selector switches without removing (dismantling) of any other equipment.

An oil-flow operated protection relay and a sudden-pressure operated protection relay shall be provided for internal failure protection. In addition a spring-loaded pressure relief device with trip contact shall be mounted directly onto the tap changer head.

The power of the transformers shall remain constant at all tap positions, and the OLTC shall be capable of successful tap changes for the maximum current to which the transformer can be loaded.

The permissible continuous through-current of each tap changer unit at rated switching capacity shall cover all cyclic loading duties as per IEC 60354 at highest current tap and at rated system operation voltage applied on the transformer terminals.

The OLTC shall withstand all kinds of through-fault currents for at least 3 (three) seconds without damage.

The motor drive, plus all auxiliary equipment for operation of the tap changer, shall be incorporated in a control cabinet made, protection class IP66, and shall be mounted onto the transformer tank in a convenient floor height.

The complete wiring shall be of highly flexible stranded copper and furnished with slip over ferrules at both ends. Wiring shall also have crimped termination. The minimum cross-section of the wiring other than for step-position transmitters shall be 2.5 mm2.

The AC supply of the motor drive cabinet shall occur via the control cabinet for cooling equipment or marshalling box, and an appropriate MCB with trip contact shall be provided in the concerned cabinet for the outgoing auxiliary supply cable.

The cabinet shall be mounted on a narrow side of the transformer and the following main equipment shall include:

- MCBs for driving motor and each auxiliary supply circuit
- Hand lamp (controlled via door contact)
- One heater, thermostatically controlled
- Minimum one conventional position transmitter of the resistor type
- Additional end position contacts
- Crank handle for manual operation
- Padlock facilities for front door
- All equipment installed in the cabinet shall be designed for a cubicle inside temperature of at least 70 ºC
- A rigid pocket for storing the related paper drawings shall be securely fixed on the inner side of the door of this cabinet

The motor drive shall include the following requirements:

- Blocking of end positions by means of limit switches
- Provisions to be made for parallel running and automatic operation controlled by a voltage regulating device and parallel control unit

The power transformers shall be able to be operated in parallel at a future date.

The transformers shall be copper wound and shall have the rating stated above. To allow for high atmospheric temperatures, the allowable temperature rises shall be reduced in accordance with IEC 60076-2. The overload capability shall be in accordance with IEC 60354.

The transformers shall be capable of withstanding, on any tapping and without damage the thermal and dynamic effects of external short circuits under the conditions stated in IEC 60076 Part 5.

Each transformer shall be fitted with an on-line continuous gas-in-oil monitor to detect and monitor the evolution of the composite value of hydrogen, carbon monoxide, acetylene and ethylene. The monitor shall be capable of providing hourly and daily trends as well as a history and events log. All the required functions of the monitor shall be available via the station DCS.

12.5.2 TRANSFORMER TESTING

The transformers shall be factory-tested in accordance with IEC 60076-1 with dielectric tests according to IEC 60076-3. The Contractor shall gain approval for the testing program from the Owner and the Owner shall be entitled to witness such testing.

The testing program shall include:

Routine tests from IEC 60076-1

- Measurement of impedance voltage, short-circuit impedance, and load loss
- Type test on one unit only
- Heat run test for ONAN

Special tests

- Induced over-voltage withstand test
- Separate source power-frequency voltage withstand test
- Full wave lightning impulse test (line terminals)
- Determination of capacitances windings-to-earth and between windings
- Measurement of zero-sequence impedance
- Determination of sound levels
- Measurement of the harmonics of the no-load current
- Measurement of the power taken by the fan and oil pump motors
- Measurement of insulation resistance to earth of the windings
- Measurement of dissipation factor
- Partial discharge tests

12.6 AUXILIARY SUPPLY

12.6.1 AUXILIARY TRANSFORMERS

The plant auxiliary loads will shall be supplied at 400 V via two 11/0.415 kV auxiliary transformers at the power station. The auxiliary transformers shall be located at the power generating plant building together with the main 400 V switchboard.

The auxiliary transformers shall be sized:

- To allow direct on line starting of all motor loads
- To supply up to 500 kVA to the Gas Conditioning Plant, via two 100% rated feeders
- To supply up to 50 kVA for the fire pumps, via two 100% rated feeders
- Auxiliary loads in the powerhouse and other buildings on the site shall be supplied from 400 volt sub-boards fed from the main 400 volt switchboard.

12.6.2 400VAC SWITCHBOARDS

The equipment will comply with the requirements of IEC standards in force and, in particular, with the standards listed in Section 1.5.2.

Switchboard assemblies shall be supplied with all necessary accessories for mounting and fixing the switchboard in position.

LV switchboards shall be modular to Form 3b. Fully equipped spare compartments shall be provided in each switchboard. The number of spare compartments shall be 20% of each size of outgoing units subject to the minimum number being 2 for each size. The arrangement of components on and within switchboards shall be standardized as much as possible.

The short circuit ratings of the switchboard assemblies shall be based on the short circuit contributions from all transformers and standby generators that are able to feed the switchboard, when operating in parallel.

The continuous current rating of switchboard assemblies shall be determined from the sum of the full load rating of all transformers feeding the switchboard.

12.6.3 LIGHTING AND SMALL POWER

The plant auxiliary loads will be supplied at 400 V via two 11/0.415 kV auxiliary transformers at the Power Plant. The auxiliary transformers will be located at the power generating plant building together with the main 400 volt switchboard. The auxiliary transformers will be sized to allow direct on line starting of all motor loads. Auxiliary loads in the powerhouse and other buildings on the site will be supplied from 400 V sub-boards fed from the main 400 V switchboard.

12.6.4 ELECTRICAL SUPPLIES TO GAS CONDITIONING PLANT AND FIRE PUMPS

The contractor shall provide outgoing connections from suitably rated isolators for the Gas Conditioning Plant and fire pumps.

- To supply up to 500 kVA to the Gas Conditioning Plant, via two 100% rated feeders
- To supply up to 50 kVA for the fire pumps, via two 100% rated feeders

The Gas Conditioning Plant supplies shall be individually metered for future billing purposes.

The contractor shall provide trenches to the boundary to accommodate the cables for the supply of the Gas Conditioning Plant, and the fire pumps.

The trenches shall be concrete-lined, and covered with removable concrete covers. The cables shall be supported on ladder rack or similar within the trench.

The cables will be supplied and installed by others.

12.6.5 LIGHTING

Lighting source types and minimum illumination level for various areas shall be as indicated in Table 9. Design illumination levels shall follow recognized international standards for the type and function of the rooms or areas being lit:

TABLE 9 LIGHTING SOURCE TYPE AND INTENSITY

ITEM	AREA	TYPE	SOURCE INTENSITY (LUX)
	Local Control Room	Fluorescent	500
	Roads/paths	LPS	10
	Transformer area	LPS	50
	Plant areas	LPS	50
	Ancillary Buildings	Fluorescent	200

All lighting fittings shall comply with IEC 598 standard on luminaries.

All fittings shall be entirely suitable for satisfactory operation in their installed locations, and shall be supported in conformity with best trade practice. Fittings installed in Gas Hazard zones shall be certified and in accordance with required codes.

Fittings for outdoor location shall be watertight, corrosion resistant, and comprise aluminum, stainless steel, or lightweight ultraviolet (UV) light stabilized reinforced polyester materials.

The position of light fittings shall be confirmed with the Owner before finalizing cabling.

12.6.6 SOCKET OUTLETS

The Contractor shall install indoor and outdoor three-phase and single-phase sockets in positions appropriate to anticipated use.

Socket outlets shall be distributed such that no item of equipment within the Plant perimeter fence is further than 20 m away from a single and three phase outlet, unless hazardous zoning requirements dictate otherwise.

12.6.7 PHASE BALANCING

The Contractor shall carefully adjust all electrical circuits so that equal electrical loading is obtained for each phase.

12.7 BLACK START GENERATOR

A diesel generator shall be provided with sufficient capacity to enable starting of one unit without any external power supply.

12.8 DC AND UPS SYSTEM

12.8.1 GENERAL

The main power station DC system shall consist of 2 × 100% 110 V batteries and chargers.

It shall provide for:

- HV and MV circuit breaker closing and tripping
- HV and MV disconnector operation
- DC lubricating oil pumps and other unit functions for rotating plant
- Protection relay systems
- Switchboard and motor control center closing and tripping
- Fire detection and suppression systems

Communications equipment may be powered from either a separate 48 V DC battery system, dual 110 V to 48 V DC/DC converters with their outputs linked by diodes so power is selectively taken from the highest voltage source, or from the UPS supply.

DCS equipment shall be powered either directly from the 110 V DC system and/or from the UPS supply.

12.8.2 BATTERIES

Batteries shall consist of blocks of not more than twelve cells connected to provide the appropriate voltage. Paralleling of cells and monobloc forms will not be allowed. The batteries shall have a design life of 15 to 20 years. The DC systems shall be the continuous float type with chargers configured to match the requirements of the battery cells provided. Rapid recharge capabilities shall be included.

Battery isolators shall be provided at the battery terminals, and switching facilities shall be provided to allow one battery bank to be tested while the other bank is in service. Terminals shall be provided to allow a dummy load to be connected for battery discharge testing.

Batteries shall be constrained in floor level racks which have seismic ratings in accordance with the seismic ratings for the plant site.

A dedicated battery room shall be provided which shall be well ventilated. Battery chargers shall be located external to the battery room. The battery room shall be equipped with facilities for the safe handling of battery acid and with emergency washing and a safety shower.

The installation design and battery capacity calculations shall follow recommended practice set out in IEEE Standard 484 and IEEE Standard 485.

12.9 UNINTERRUPTIBLE POWER SUPPLY (UPS)

A continuous duty, on line, solid state, three phase uninterruptible power system with 1 + 1 redundancy shall be provided. The system shall consist of a rectifier, battery charger, Pulse Width Modulated (PWM) inverter, batteries and a control panel.

Each UPS supply shall be capable of supplying the total load, including all peripheral devices, station emergency lights, building security equipment, fire detection equipment.

The UPS batteries shall comply with the requirements in Section 12.8.2 above. Each UPS battery shall have an uncorrected battery size of sufficient capacity to supply the maximum station load plus 50% for 8 hours without the final voltage per cell drooping below 1.80 V.

12.10 EARTHING

The power station earthing system shall be an interconnected network of bare copper conductor and copper-clad ground rods. The system shall be provided to protect plant personnel and equipment from the hazards that can occur during power system faults and lightning strikes and to provide the ability to detect line-to-ground faults.

The station grounding grid shall be designed for adequate capacity to dissipate heat from ground current under the most severe conditions in areas of high ground fault current concentrations, with grid spacing such that safe voltage gradients (step potential and touch potential) are maintained.

Bare conductors to be installed below ground shall be spaced in a grid pattern. Each junction of the grid will be bonded together by an exothermal welding process.

In the plant area, grounding connections shall be brought through the ground floor and bonded to the building steel and equipment. The earthing system shall be extended to include all plant and equipment external to the main power plant building.

The earthing system grid design shall comply with the requirements of IEEE 80.

Remote buildings and outlying areas with electrical equipment shall be grounded by establishing local sub-grade ground grids and equipment grounding systems in a manner similar to the plant area. All station security and perimeter fences which are metallic shall be suitably bonded to the earth grid, and where practical remote grids shall be interconnected with the station earth grid to reduce the hazard of transferring large fault potentials to the remote area through interconnecting instrumentation and communication cable shields.

12.11 PROTECTION SYSTEMS

12.11.1 GENERAL

The protective relaying system shall protect equipment in the auxiliary power supply system, generator terminal system, connection to the primary power supply system, transmission line, turbine generator system and the electrical loads powered from these systems.

The following general requirements apply to all protective relaying applications:

- The protective relay system shall be designed to remove or alarm abnormal operating occurrences occurring on equipment designed for electrical power generation, voltage transformation, energy conversion, and transmission and distribution of electrical power.
- The protection system shall provide discrimination with other protection systems.
- They shall limit damage to faulted equipment.
- They shall minimize possibility of fire or explosion.
- They shall minimize hazard to personnel.
- The protection equipment shall consist of proven, self-diagnosing, digital type relays with complementary functions and sufficient redundancy to ensure that faults are detected and cleared without disruption to unaffected supplies. The scheme shall incorporate overlapping zones of protection with principal plant items provided with back-up protection in addition to the primary protection.
- Relays may be offered as individual or combination devices incorporating more than one function. Protection devices providing mutual backup shall be placed in different groups.
- Relays shall have sufficient setting ranges to cater for all conceivable instrument transformer characteristics, discrimination requirements, and sensitivities to fault conditions.
- Each relay shall be clearly labeled with relay type and descriptive function. Relays shall be installed and wired in switchgear in accordance with Applicable Codes and Standards and industry practice.
- Relay and metering potential circuits shall be segregated and individually protected by fuses or MCCBs.
- Primary and secondary trip circuits (DC) shall be segregated. Primary trip circuits, high priority trip circuits and relay power supply circuits shall be segregated. Circuit protection devices shall not be included in relay trip circuits.
- Protective relays shall be equipped with high speed recording facilities for voltage and current. Fault information, disturbance and event records shall be available on-line via simple system integration protocols to provide fast fault diagnosis via the Engineering Workstation.

12.11.2 CIRCUIT BREAKER FAIL PROTECTION

Circuit Breaker Fail Projection shall be provided to detect failure of a circuit breaker to interrupt the current that it is carrying and to backtrip all other circuit breakers connected to the same busbar.

12.11.3 TRIP CIRCUIT SUPERVISION

Trip circuit supervision shall be provided on all high voltage circuit breakers, medium voltage and 400V incoming circuit breakers. Breaker status lamps (red) shall be connected in the trip coil circuit; loss of DC to trip circuits shall be alarmed at the DCS.

12.11.4 UNDER-VOLTAGE PROTECTION

Under-voltage relay schemes shall be provided in all voltage levels for alarm and/or trip functions.

The mains voltage shall be monitored to provide a trip signal to disconnect any device, and to initiate a controlled shut down if appropriate, under the following conditions:

- If unexpected restarting after a stoppage due to a drop in voltage or the complete failure of supply may result in injury to persons or damage to property.
- If there is a risk, that equipment can be damaged from excessive heating if operated at reduced voltage for prolonged periods.

Each item of equipment that needs to be protected against under voltage, or momentary loss of supply, shall be fitted with its own separate under-voltage protection. In all cases, an alarm signal shall also be given to the DCS.

The requirement to provide under voltage protection to disconnect any device does not apply to equipment used in case of an emergency, where tripping of the device may create additional hazards. In these cases, only an alarm signal shall be provided to the DCS.

12.11.5 INSTRUMENT TRANSFORMERS

Instrument transformers shall be of sufficient output, and appropriate metering or protective class to cater for the connected burden.

Unless otherwise agreed voltage transformers shall be removable and epoxy resin encapsulated complying with IEC 60044-2. Voltage transformers secondary windings shall be 110 V.

The current transformers shall comply with IEC 60044-1. Current transformers secondary windings shall be 1 ampere rating.

12.11.6 GENERATOR PROTECTION SYSTEM

The relay protection shall be provided against the following faults and disruption of normal operation of the generator and on its terminals:

- Multiphase earth faults in the stator winding (differential protection)
- Single phase faults in the stator winding
- External short circuits
- Symmetric overloading of the stator winding
- Asymmetric overloading of the stator winding
- Fault in the excitation system
- Voltage rise
- Generator reverse power
- Fault on the main transformer

- 100% stator earth fault protection

12.11.7 11KV BUS PROTECTION

The 11kV bus protection shall include busbar differential protection on each section of the bus.

12.11.8 TRANSFORMER PROTECTION SYSTEM

Transformers shall be provided with relay protection devices against the following types of faults and abnormal duty conditions:

- Multiphase faults in the windings and on their terminals
- Single-phase earth faults in the winding and on terminals connected to the network with the solidly earthed neutral
- Turn-to-turn faults in the winding
- Currents in the windings due to external short circuits
- Current in the windings due to overload
- Oil level drop
- Single-phase earth faults in medium voltage networks
- Gas protection for transformers rated at 1 MVA and greater
- Back-up overcurrent and earth fault protection
- The transformer differential protection shall include the overhead line connection to Sheberghan 110 kV substation, and shall trip the circuit breaker at the Sheberghan substation.

12.11.9 PROTECTION OF MEDIUM VOLTAGE CABLES

Overcurrent and Earth Fault protection against overloading, short circuits and multiphase and single phase earth faults shall be provided for cable lines.

12.11.10TRANSMISSION LINE PROTECTION

The 110 kV overhead transmission line between the power station and the substation shall be protected for overcurrent and earth fault, and by differential current detection using the OPGW.

13.0 110 KV POWER PLANT AND SUBSTATION EQUIPMENT

13.1 GENERAL

Two departure bays are required for the power plant to take the transformer 110 kV to the outgoing gantry connecting to the approx 0.5 km connecting line to the Sheberghan 110 kV substation.

Two new line bays to connect the output of the Sheberghan Power Plant into the 110 kV Sheberghan Substation grid are required.

- Install two 110 kV power plant line bays, each complete with one three-phase motorized line disconnector with earth switch, one three-phase motorized bus disconnector, one three-phase current transformer, one set of surge arresters with counter, one three-phase capacitive voltage transformer, OPGW junction box, associated line gantries and associated protection and control panels, termination of transmission line droppers, OPGW and shield wire, including the supply of suitable palms and connectors
- Install two 110 kV line bays, each complete with three-phase circuit breaker, one three-phase motorized line disconnector with earth switch, two three-phase motorized bus disconnector, one three-phase current transformer, one set of surge arresters with counter, one three-phase capacitive voltage transformer, OPGW junction box, associated line gantries and associated protection and control panels, termination of transmission line droppers, OPGW and shield wire, including the supply of suitable palms and connectors
- Install two sets of rigid tubular 110 kV busbars, including structures, busbar supports, hardware and insulators to connect to the existing bus.

The civil works shall include all necessary supply of equipment and materials, design, construction, excavating, refilling, etc. to complete a functioning substation. The civil works shall include the following main parts:

- Forming of the site to ensure correct surface drainage, if necessary
- Leveling and compacting of substation area
- Gravelling of the complete bay area
- Excavation and backfilling as required
- Construct new internal roads
- Construct concrete foundation for all apparatus
- Construct steel structures and apparatus supports as required

13.2 HV TRANSMISSION SYSTEM CHARACTERISTICS

PARAMETER	110 KV SYSTEM
Nominal voltage U_n	110 kV
Highest system voltage U_{max}	123 kV
Design voltage U_m	123 kV
Standard frequency	50 Hz
Rated short time current:	25 kA/1 sec
System configuration	3-phase, 3-wire
Earthing	Compensated Petersen Coil; Semisolid (X=j20.2 Ω) open system
Insulation coordination	IEC 60071-1
Rated impulse withstand (peak), 0–1,500 m amsl	550 kV
Rated 1 min power frequency withstand (kV rms), 0–1,500 m amsl.	230 kV
Rated 1 min power frequency withstand (kV rms), 1,501–2,500 m amsl.	230 kV
Minimum phase-to-earth air clearance, 0–750 m amsl	1,200 mm
Minimum phase-to-earth air clearance 751–1,500 m amsl	1,300 mm
Minimum phase-to-earth air clearance, 1,501–2,500 m amsl	1,500 mm
Creepage distance outdoor	25 mm/kV
Vector group of feeding transformers	YNd5 and YNdII

13.3 10 KV PRIMARY EQUIPMENT

13.3.1 GENERAL

All 110 kV primary equipment shall be designed and manufactured in accordance with the latest edition of IEC standards. This includes the main applicable standards listed in section 1.5

All 110 kV primary equipment and accessories shall be air insulated, installed outdoors and meet the requirements specified in Clause 3.7, Dimensioning Data.

13.3.2 110 KV CIRCUIT BREAKERS

The circuit breakers shall be rated in accordance with the following data:

Rated voltage	123 kV
Rated normal current	1,250 A line bay
Rated short-circuit breaking current	40 kA 3 sec

The 110 kV circuit breakers shall be of SF6 type

Circuit breakers shall be equipped with motor-charged spring operated mechanism for 110 V DC. The motor-charged spring-operated devices shall have a direct-on-line starter. It shall be possible to set the operating spring manually with a hand-crank. Motors shall be designed in accordance with valid IEC publication and operate correctly between 85% and 110% of rated voltage. The motors shall be effectively protected. The motor circuits shall be controlled two-pole (phase) from the motor-protection and end-position contacts. An auxiliary relay for alarm shall be connected to the motor-voltage and have a closed contact for no voltage, tripped motor-protection and unloaded spring.

The operating mechanism shall be provided with an anti-pumping device.

The circuit breaker shall have 110 V DC shunt coils for closing and duplicate tripping. The coil and relays in the closing circuits shall operate correctly between 85% and 110% of the rated voltage. For tripping circuits the limits are 70% and 110%.

The operating devices shall be equipped with a selector switch for local and remote control.

Manual closing for maintenance work shall be possible. Manual tripping (mechanical) shall be possible even in the absence of supply voltage for emergency situations, unless the breaker is locked out.

One set of auxiliary contacts necessary for control purposes shall be mechanically linked to the circuit breaker. All contacts shall be wired and connected to terminals in the cubicle.

A switch shall be provided for the operating voltage for each circuit breaker. The switch shall in the open position prevent all electrical operations of circuit breakers. The switch shall have at least 10 contacts and be labeled OPERATION.

The mechanism shall be provided with an operation counter for at least 9999 CO-cycles.

The circuit breakers shall be fitted with an auto-recloser relay, designed for automatic reclosing of the line in case of transient overcurrent or earth faults. The relays shall lockout further operation after two unsuccessful attempts at reclosing.

13.3.3 110 KV DISCONNECTORS/ EARTHING SWITCHES

The disconnectors and disconnector/ earthing switches shall be rated in accordance with the following data:

Rated voltage	123 kV
Rated normal current	1,250 A line bay
Rated short-time withstand current	40 kA, 3 second
Rated lightning impulse withstand	
Voltage to earth and between phases	550 kV

The disconnectors shall be of center break or center rotating type with horizontal operation. All disconnectors shall provide the possibility for a manual operation with a hand crank.

Disconnectors with a manually operated earth switch shall be provided with a mechanical interlocking between the disconnector and the earth switch to prevent closing of the earth switch when the disconnector is in the closed position.

The disconnector and the earth switch shall be possible to lock with padlock in open and closed position.

Motor operated disconnectors shall be designed with three-pole operation and shall operate on 110 V DC. The motor shall be designed in accordance with valid IEC publication and work correctly between 85% and 110% of rated voltage. The motor shall be effectively protected. Electric control shall always be two-pole to avoid malfunction in case of earth faults.

Motor operated disconnectors shall be designed for control and position indication from remote. The operating device shall be equipped with a selector switch for local and remote control.

13.3.4 110 KV VOLTAGE TRANSFORMERS

The three single-phase voltage transformers shall be rated in accordance with the following data:

Voltage ratio	110V/√3,
Accuracy/burden secondary	0.2, 100 VA
Accuracy/burden tertiary	3P, 100 VA
Type	Capacitive

Earthing of secondary windings shall be done through a disconnectable terminal inside the low-voltage cabinet. Each secondary winding shall be protected with individual MCBs or fuses. To prevent malfunction of relay protection, interlock system, etc. a supervision device for the MCBs or fuses shall be provided.

A legible circuit-diagram plate showing the transformer connection and terminal markings, shall be permanently fixed inside the low-voltage cabinet. The separate main data for the different cores shall be shown on the plate.

13.3.5 110 KV LIGHTNING ARRESTERS

The lightning (surge) arrestors shall be rated in accordance with the following data:

System voltage	123 kV
Rated voltage (Ur IEC 60099-4)	123 kV rms
Energy Capability Class	Class 3
Nominal discharge current	10 kA peak

The surge arresters shall be of ZnO-type and heavy-duty station class. One common surge counter per three-phase group of arresters shall be provided.

13.3.6 MEDIUM AND HIGH VOLTAGE TERMINALS

Terminals shall normally be of module plate type. If the terminal is a direct extension of an internal conductor as for bushings or current transformers, pin type is accepted as an alternative.

Copper or copper alloy terminals shall be tinned to a thickness of minimum 50 µm. Copper alloys shall not be sensitive to season cracking. Aluminum or aluminum alloy terminals shall not be treated. Aluminum alloys sensitive to layer or inter crystalline corrosion shall not be used.

14.0 TRANSMISSION LINE

14.1 SCOPE

The scope comprises:

- Inspection and repair of the existing 110 kV line between Sheberghan substation and Mazar-e Sharif
- Supply and installation of new line between the power station and Sheberghan substation

14.2 EXISTING LINE

The Contractor shall allow in the tendered price for the inspection of the complete line (approximately 120 km) to document all repair requirements. The Contractor shall submit a variation request, for consideration by the Owner, to carry out all the work required to bring the line up to operational status, based on the rates included in the tendered price schedule.

The restoration of this line shall be at least to the same standard as the original design and capacity. The conductors shall be least the same cross-sectional area as the existing line.

For information, there is up to 30 km of overhead line currently missing conductors, and it is anticipated that there will be numerous poles and insulators over the length that will require replacement.

The line will normally be approached from the existing main and secondary roads. However, it is the responsibility of the Contractor to ensure the adequacy of the access roads.

14.3 POWER STATION LINE

Design, supply, delivery at site, erection, testing on site, commissioning of the following materials and works for the approximately 0.5 km line connecting the Power Station to the Sheberghan 110 kV substation, including:

- Conductors
- OPGW groundwire
- Insulators and fittings
- Lattice steel towers and concrete or steel poles
- Structural steelworks
- Foundation works
- Earthing system

14.4 ELECTRICAL DESIGN

The electrical characteristics of the transmission line between the Power Station and Substation shall be as stated in Table 10.

TABLE 10 ELECTRICAL CHARACTERISTICS OF POWER LINE

DESCRIPTION	110 KV CONDUCTOR
Nominal current (single phase)	525 A
Nominal transmission capacity (per circuit)	110 MVA
Maximum shielding angle to outer phase conductor	30°
Minimum creepage distance	2,327 mm
Number of conductors per phase	1
Conductor spacing (center to center)	n/a

14.5 MECHANICAL DESIGN

14.5.1 CONCRETE POLES

The pole structures shall be of pre-stressed concrete construction with appropriate foundations. The general outlines of the basic structure types, shall be as per the original designs, providing they meet the requirements of this specification.

In order to save time for design of structures, the Contractor may propose an existing proven structure design, if it is equal to, or exceeds the design loading and clearances required by this Specification.

14.6 DESIGN DATA-ASSUMPTIONS AND DETERMINATIONS

14.6.1 WIND LOADS

The maximum design wind velocity in Northern Afghanistan is 41 m/s, which corresponds to a dynamic wind pressure of 1,000 N/m^2. Reduction factors on the wind pressure, for increasing span length, shall be based on IEC 60826 – Design criteria of overhead transmission lines.

The coefficient of dynamic wind pressure shall be considered for all towers/ conductors/ groundwire according to IEC 60826. The dynamic wind pressure coefficient for the line conductor is 1.0. The dynamic wind pressure coefficient for the insulator set is 1.2.

The total effect of wind on duplex conductors shall be taken equal to the sum of the wind load on each sub-conductor without considering any masking effect of one sub-conductor on the other.

14.6.2 DESIGN LOADING ASSUMPTIONS

The structures shall be designed to withstand the following load combinations as a minimum:

- High wind at 90 degrees angle to the line:
  - Maximum wind speed at a conductor temperature of + 10 °C.
- High wind at 45 degrees angle to the line:
  - Maximum wind speed at a conductor temperature of + 10 °C.
- Exceptional conditions:
  - Broken wire condition and longitudinal overload condition at +10 °C final tension in accordance with IEC 60826
- Construction and maintenance loads:
  - Loading conditions according to IEC 60826.

- Combined ice and wind loads:
  - Lower altitudes—5 mm radial ice thickness, 100 Pa wind, –5 °C (glaze ice)
  - Medium altitudes—15 mm radial ice thickness, 200 Pa wind, –5 °C (hard rime ice)
  - High altitudes—35 mm radial ice thickness, 250 Pa wind, –° C (soft rime ice). Ice density, based on the different expected ice types, and related considerations shall be as per IEC 60826.

14.6.3 DESIGN LOADING REQUIREMENTS

The structure/line loading shall be as determined from all the relevant requirements of IEC 60826, and this specification.

14.6.4 CONDUCTORS AND OVERHEAD GROUND-WIRE

The following design limitations shall apply to the conductors and OPGW:

- Conductors:
  - Temperature +5 ºC, still air, initial tension not exceeding 25% of the UTS
  - Temperature +25 ºC, still air, final tension not exceeding 20% of the UTS
  - Final sags under maximum temperature to be calculated at +75 ºC
- OPGW:
  - In accordance with manufacturer’s instructions but not exceeding the following:
  - Temperature +5 ºC, still air, initial tension not exceeding 20% of the UTS.
  - Temperature +25 ºC, still air, final tension not exceeding 20% of the UTS
  - Temperature +20 ºC, still air, final sag not exceeding 75% of initial conductor sag at the same temperature
  - Final sags under maximum temperature to be calculated at, +55 °C

14.7 CLEARANCES

14.7.1 CONDUCTOR CLEARANCE TO GROUND AND OBJECTS ON THE GROUND

The following minimum clearances between conductor and ground shall be maintained at a maximum conductor temperature of +75 ºC in still air and final sag, i.e., pole spotting temperature:

- Ground accessible to pedestrians only 6.5 m
- Ground in urban areas, road crossings and water without sea traffic 6.5 m

The clearances given above shall be observed within the overhead line area and up to 5 m outside the outer phase. Groundwire sag shall not be larger than the conductor sag under any circumstances.

14.8 MATERIAL SPECIFICATIONS

14.8.1 CONDUCTORS AND INSULATORS

Conductors and insulators shall conform to the latest revision of the standards listed in Section 5.1, which shall be verified by a type certificate issued by the manufacturer.

14.8.2 OVERHEAD CONDUCTOR

The conductor shall be ACSR (aluminum conductor steel reinforced), single or duplex in accordance with IEC 61089.

The conductor/sub-conductor shall have the following physical properties or equivalent:

Code name	Squab
Aluminum sectional area	300 mm^2
Overall diameter	24.53 mm
Stranding	26 × 3.87 / 7 × 3.01
Weight including grease	1,042 kg/km
Ultimate strength	107.5 kN
Initial modulus of elasticity	76,000 MPa
Permanent elongation due to creepage	0.4 ‰
Elongation coefficient	18.9 × 10-6 /C
Rated DC resistance at 20 ºC	0.0943 Ω/km

Manufacturing, testing and delivery of conductors shall as a minimum be in accordance with IEC 60888, IEC 60889, and IEC 61089.

14.8.3 OVERHEAD GROUNDWIRE

The overhead groundwire shall be an OPGW with 24 fibers, with a combination of stranded aluminum and aluminum coated steel, surrounding the optical fiber configuration.

Preference will be given to the slotted core design, unless alternatives provide similar crush resistance and everyday tension characteristics.

Manufacturing, testing and delivery of conductors shall as a minimum be in accordance with IEC 826.

14.9 GROUNDING

14.9.1 GENERAL

Every structure shall be permanently and effectively grounded to achieve a low footing resistance.

The Contractor shall carry out approved soil resistivity tests at each structure location to determine the number of rods or conductors required. The results of the soil resistivity tests shall be documented by the Contractor and submitted to the Owner for approval.

14.9.2 STRUCTURE FOOTING RESISTANCE

The footing resistance of any structure shall be less than 10 ohms.

Individual structure earthing shall be made with earthing rods or when this is not possible, with a radiating earth conductor.

14.9.3 EARTHING RODS

Earthing rods shall be solid, copper-clad steel rods with a minimum diameter of 16 mm with provision for coupling together with a suitable clamp for connection of the groundwire. The copper coating shall have a minimum thickness of 0.3 mm.

14.9.4 RADIATING EARTH CONDUCTORS

Conductors for connecting structures to earthing, for radiating earth grid and for continuous counterpoise shall be copper-clad steel. Wires of the chosen conductor shall be at least 16 mm^2.

The Contractor shall choose an appropriate conductor as above according to footing resistance and short circuit current.

14.9.5 CONNECTIONS

The groundwire shall be directly connected to the tower with bolted connectors of an approved material suitable for use with the groundwire such that galvanic action (i.e., chemical reaction between copper and galvanized steel) is minimized.

Connections to the substations earthing grid shall be made by compressed clamps or bolted connectors of approved design.

15.0 CIVIL WORKS

15.1 SCOPE OF SUPPLY

The civil works portion shall:

- Investigate access route requirements and undertake all rehabilitation of roads and bridge strengthening required for the safe and secure transport of equipment to site
- Design and construct bulk earth works of Power Plant including site clearance and demolition of existing structures and buried services
- Design and construct site access roads and plant maintenance access roads, parking and pavement areas.
- Design and construct all necessary drains, treatment and disposal for stormwater, sanitary sewer, and contaminated water
- Design and construct power plant perimeter security fencing and gates, internal fencing and landscaping
- Design and construct all foundations for plant and equipment for the power plant
- Design and construct powerhouse building to enclose all power generating equipment and associated auxiliaries, control systems, operator facilities, utility annex, inclusive of all necessary building services
- Design and construct power plant administration building
- Design and construct heavy workshop and bulk store
- Design and construct guardhouse at power plant entrance, inclusive of all necessary services
- Design and construct guardhouse

15.2 CIVIL REQUIREMENTS

Civil design shall be undertaken in accordance with the provisions of the Uniform Building Code 1997, and the appropriate national design standards and codes of practice of Afghanistan, whichever is more stringent. Design basis parameters for civil design are included in this section.

15.2.1 GEOTECHNICAL INVESTIGATION

The Contractor shall be responsible for the geotechnical design and will have the complete responsibility for the foundations design. The Contractor shall perform all required geotechnical investigation to be able to complete the detailed design to a satisfactory level.

15.2.2 REGIONAL ROAD INFRASTRUCTURE REHABILITATION

The delivery route for heavy plant and equipment will be determined by the Contractor. Contractors shall submit a preliminary assessment which identifies the preferred delivery route

for materials, plant and equipment. The preliminary assessment shall be developed into a transportation management plan by the Contractor and shall address the following criteria:

- Route study and road condition assessment between Sheberghan and the specified points of supply within Afghanistan including capacity assessment of road bridges and other load bearing structures
- Limited spot repair requirements to the local highway network
- Traffic management planning and associated temporary works for transit through urban areas
- Temporary strengthening methodology for any load bearing structure crossed

15.2.3 BULK EARTH WORKS

Bulk earthworks will comprise:

- Stripping and stockpiling topsoil, clearance of mines and unexploded ordinance by others
- Grading and leveling of site in preparation for construction within each battery limit

15.2.4 SITE ACCESS AND PLANT MAINTENANCE ACCESS ROADS

Access roads will comprise:

- Heavy duty asphalt two-lane plant access road from existing road network to plant gates on suitably prepared sub-base
- Internal site access roads from steel mesh reinforced concrete slabs on suitably prepared sub-base
- Truck loading area for chemicals and inert gases

15.2.5 DRAINAGE AND SEWERAGE

The drainage systems for the Power Plant and Gas Conditioning Plant shall include:

- Clean stormwater from buildings and hard stand areas piped to soakage
- Oily and potentially contaminated stormwater piped separately from clean stormwater to packaged separation system and then to soakage
- Sanitary drains to packaged treatment system

15.2.6 FENCES, GATES AND LANDSCAPING

The following features shall be provided to plant perimeters:

- Vermin-proof perimeter fence or wall with barbed wire to perimeter of power plant, gas treatment plant and switchyard. Signage will be provided on the fences in local languages and symbolically to warn people of the dangers within the respective areas.
- Electrically operated sliding gates controlled from gatehouse to gas treatment plant
- Excess soil from site clearance to be spread evenly around the exterior of the site perimeter or to a designated spoil disposal area and re-vegetated in keeping with the prevailing natural environmental conditions. The spoil disposal area will be designated by Owner.

15.2.7 POWERHOUSE BUILDING AND UTILITY ANNEX

The layout and geometry of the powerhouse building shall suit the requirements for installation and maintenance of the power plant equipment and other such requirements of the power plant supplier. A utility annex housing control room, switchrooms, light engineering workshop and staff amenities is to be provided at the end of the powerhouse machine hall. The generic features of the powerhouse building include:

- Reinforced concrete building and machine foundations and ground floor slab on grade
- Steel frame superstructure for machine hall with lightweight metal cladding system
- Reinforced concrete frame structure with ground floor slab on grade and suspended slab for attached utility with thermally insulated cladding system
- Mechanical ventilation for machine hall
- Dust filtration system for machine hall air intakes
- Air conditioning / heating for control room, switchroom, light engineering workshop and amenities
- Plumbing, ablutions, eyewash, and service water
- Electrification, internal and external lighting and power outlets
- Overhead maintenance crane to machine hall, lifting capacity 10 tonnes
- Fire detection, pump-house, piping, sprinklers, alarms, hose reels and extinguishers
- Acoustics screens or curtains between the engines to allow maintenance activities to continue with engines running

15.2.8 ADMINISTRATION BUILDING

The administration building shall be free standing structure separate to the power house, and shall include the following:

- Director / Station Manager’s office
- Offices general (5)
- Meeting / board / training room
- Reception
- Technical library
- Prayer room
- Lunch room
- Kitchen (meals provided by Owner)
- Toilets and showers (male and female) including lockers, benches, etc.
- Laboratory (oil / gas testing)

The ambient extremes vary considerably and both heating and cooling will need to be provided to the building, heating via water radiators using water jacket heat is expected to be cost effective. Cooling of the building shall be by a reverse cycle heat pump, which is also an

efficient way to both cool and heat the building. Another option is to use an absorption chiller however the capital costs for this has not been included.

In Afghanistan it is common for the Owner to provide meals. The lunch room shall be sized to hold 25 people and a kitchen provided to cater for this.

Construction of the administration building shall comprise:

- Reinforced concrete foundations and ground floor slab on grade
- Reinforced concrete suspended floor slab
- Reinforced concrete or steel frame superstructure with thermally insulated cladding system

15.2.9 FOUNDATIONS FOR PLANT AND EQUIPMENT

Foundations for plant and equipment shall be designed to resist all static, seismic and dynamic loads from mounted equipment supported, in service and during installation, commissioning and maintenance. Pad-type footings are to be provided for all equipment with allowable bearing and settlement criteria determined from the results of a site specific geotechnical study. Foundations shall include the following features:

- Excavated surfaces to be protected with a 50 mm layer of site concrete
- Foundations to be constructed from reinforced concrete
- All foundation sides to be cast against formwork
- Concrete mix design and surface shape and finish of exterior foundations to provide lifetime resistance to freeze-thaw action.

15.2.10 STAIRWAYS, LADDERS, AND PLATFORMS

Access stairways, ladders and platforms shall be provided where personnel access is required for inspection, operations or maintenance of plant. Ladders shall only be used where infrequent access is required for observation only. All areas where maintenance is required shall be accessible by stairways.

15.2.11 GUARDHOUSE

The guardhouse will be provided at the entrance gates to the site. The guardhouse will be sized for two guards per shift. It will include power and communications facilities (CCTV, intercom and telephone), have radiator heating, and air conditioning with small kitchen facilities and a toilet.

15.2.12 CHEMICAL STORAGE

Contractors will determine and propose the size and configuration of these systems in accordance with Prudent Utility Practice. Sun and weather protection is to be provided.

15.2.13 ENGINEERING WORKSHOP AND BULK STORE

The power plant will not be able to make use of the existing facilities at the existing gas processing plant. All facilities will need to be provided under this contract.

A free standing engineering workshop is required for routine maintenance and engineering duties, approximate floor area 250 m^2. A free standing bulk store is required for storage of large

spare parts and items requiring covered storage, approximate floor area 800 m2. Construction of the workshop and bulk store shall comprise:

- Reinforced concrete foundation and ground floor slab on grade
- Steel portal frame superstructure with lightweight cladding
- LV power supply and lighting (three-phase supply required in workshop)
- Heavy duty storage racking to bulk store allowing for fork hoist access

15.3 CIVIL DESIGN CRITERIA

15.3.1 GENERAL

The applicable standard for civil and structural design shall be the US Uniform Building Code (UBC), and referenced codes of practice. For the purposes of cross referencing individual clauses of the UBC, the 1997 edition has been used in the preparation of this document.

Structures will be designed by Limit State design methods conforming to criteria stated herein and appropriate codes of practice.

Buildings, structures and their foundations shall be designed for dead loads, live loads, wind loads, snow loads, seismic loads, crane loads, equipment loads, etc. Combinations of loads shall be in accordance with the requirements of UBC Volume 2, section 1612.

15.3.2 DEAD LOADS

Dead loads due to weight of permanent structural elements of buildings, such as foundations, walls, floors, roofs are generally vertical loads. Typical unit weights are summarized below:

Steel	77.0 kN/m^3
Aluminum	28.0 kN/m^3
Reinforced Concrete	24.0 kN/m^3
Pre-stressed concrete	24.0 kN/m^3
Wood	8.0 kN/m^3
Asphalt	23.0 kN/m^3
Soil	18.0 kN/m^3
Soil (submerged)	8.0 kN/m^3
Gravel	19.0 kN/m^3
Masonry	21.0 kN/m^3

15.3.3 EQUIPMENT LOADS

Equipment loads are to be indicated on the load plans as dead loads (permanent) and include all loads due to the dead, operating and test weight of plant components.

15.3.4 LIVE LOADS

- Live loads or variable loads are all non-permanent in nature and occurring over areas not occupied by fixed equipment.

- Where equipment loads are taken into account, live loads on the related areas need not be considered in addition.
- Loads for the lay-down of components during erection/construction works shall be shown on separate drawings produced by the Plant Vendor.
- The ground level floor slab of the building containing the power generation equipment shall be designed for a minimum live load of 0.10 Bar g.
- Stairs and access platforms not subject to assembly/maintenance loads shall be designed for a minimum live load of 0.05 Bar g.
- Trench covers not accessible to heavy wheeled traffic shall be designed for a minimum live load of 0.05 Bar g.
- Non-trafficable roofs shall be designed for a minimum live load of 0.025 Bar g.
- All other live load situations shall be determined according to UBC Volume 2, Chapter 16 Division I

15.3.5 SNOW LOADS

Buildings and structures shall be designed, where practicable, to preclude the build up of snow.

Design for snow loads shall be according to the requirements of UBC Volume 2, Chapter 16 Division II, using a design snow load, S, of 0.05 Bar g.

15.3.6 WIND LOADS

Design of buildings and structures for wind loads shall be in accordance with the requirements of UBC Volume 2, Chapter 16 Division III, for exposure class C.

The following basic wind speeds shall apply:

Basic wind speed for deflection limits:	24 m/s (3-second gust)
Basic wind speed for strength:	30 m/s (3-second gust)
Basic wind speed for dynamic effects:	24 m/s (mean hourly wind speed)

15.3.7 EARTHQUAKE LOADS

Design of buildings, structures, equipment and associated supports for earthquake effects shall be undertaken in accordance with the requirements of UBC Volume 2, Chapter 16 Division IV. Limit state design using equivalent static or a dynamic method is permissible.

The site seismic hazard characteristics shall be determined by specific study as part of the detailed design. For the purposes of preliminary design, the following parameters shall be applied to determine design seismic response coefficients:

- Seismic Zone 4
- Soil profile type SD

15.3.8 CRANE LOADS

The vertical loads and wheel geometry from electric overhead traveling cranes/monorails and hoists, as required, shall be as per supplier’s loading data.

Structural actions resulting from the operation of cranes shall be factored to include dynamic and impact effects according to the requirements of UBC Volume 2, Chapter 16 Table 16-B.

15.3.9 EARTH PRESSURES

For non-cohesive backfill

- $K_a = \dfrac{(1-\sin\phi)}{(1+\sin\phi)}$ Coefficient of active earth pressure.
- $K_p = \dfrac{(1+\sin\phi)}{(1-\sin\phi)}$ Coefficient of passive earth pressure.
- $K_o = 1-\sin\phi$ Coefficient of earth pressure at rest

Active soil pressure, $p_a = K_a.\gamma.h$

Passive soil pressure, $p_p = K_p.\gamma.h$

where $\gamma =$ density of soil

For design of all walls below ground, a surcharge of 0.10 Bar g shall be applied unless it is known that a larger load will act in the vicinity.

15.3.10 GROUNDWATER PRESSURES

Subject to confirmation during the preliminary geotechnical investigation, the groundwater table is estimated to be at least 10m below existing ground level. Thus groundwater pressure loads need not be considered on buried structures.

15.3.11 CONSTRUCTION LOADS

All structural components will be designed for the anticipated loading imposed during construction.

15.3.12 LOAD COMBINATIONS

Load combinations shall conform to the requirements of UBC Volume 2, Chapter 16 division I. Load factors for the following special loads shall be applied in addition to prescribed Division I loads, when designing for strength.

Crane loads: 1.6 with load combinations involving dead, live, and snow; 1.0 with wind or earthquake.

Plant operating loads, (including piping): 1.6 with load combinations involving dead, live, snow and wind; 1.2 with earthquake

Suppliers may propose load factors for load combinations where special short term or unusual load conditions co-exist with the combinations specified above.

15.3.13 DEFLECTION LIMITS

Deflection limits for serviceability limit state conditions shall be in accordance with the requirements of UBC Volume 2, Chapter 16 Division I.

15.3.14 STABILITY OF STRUCTURE

Each structure or part thereof shall be designed to prevent instability due to overturning, uplift and sliding, with factors of safety above working loads of 2.0, 1.5, and 1.5, respectively.

15.3.15 FOUNDATION DESIGN

Detailed foundation design for plant and associated buildings and structures will require a targeted geotechnical investigation to determine the most appropriate foundation system for individual load intensities and actual site conditions.

For the purposes of preliminary design, the following parameters shall be used assuming shallow foundation design can be adopted throughout:

Bulk density, γ= 19 kN/m^3 for retaining, 18 kN/m^3 for uplift resistance

Buoyant density, γ' = 9 kN/m^3 for retaining, 8 kN/m^3 for uplift resistance

Friction angle, ϕ = 30o

Bearing capacities: 30 Bar g ultimate soil strength

100 kPa net for unfactored loads excluding seismic

150 kPa net for unfactored loads including seismic

15.4 DESIGN OF DRAINAGE SYSTEM

15.4.1 GENERAL

The drainage system shall be a combination of and channel combined with an underground piping system, packaged on site treatment, and soakage.

Drainage shall be separated into:

- Stormwater
- Sanitary sewer
- Contaminated water

15.4.2 STORMWATER

Stormwater systems shall be designed using the Rational Method, assuming rainfall intensity of 100 mm per hour for a 10-minute duration storm.

LOCATION	COEFFICIENT
Buildings	0.90
Concrete / asphalt	0.90
Gravel areas	0.35
Non-paved areas	0.30

The soils at the site exhibit high permeability characteristics. For the purposes of preliminary design, runoff from paved areas may be collected and piped to localized soak pits. Percolation tests shall be undertaken as part of the detailed design process to determine soak pit sizes.

Runoff from the roofs of buildings and other structures need not be collected and the design may allow discharge directly to the ground. A concrete apron shall be provided in the splash zone at ground level around all such structures to prevent scour. The apron shall be formed with a cross fall away from the structure with adequate provision for soakage.

15.4.3 SANITARY SEWER

Sewage shall be collected from each point source and piped to an on site treatment system. An example of a suitable system is a two chamber septic tank with an effluent screen on the primary tank outlet and effluent siphon system in the secondary tank to pulse dose the downstream disposal field. The system shall be suitably located to enable both tanks to be periodically maintained and pumped out, and adjacent to a remote area of the site for the disposal field.

15.4.4 CONTAMINATED WATER

All outdoor equipment for which the risk of contaminant leakage (oil, glycol, process chemicals, boiler blowdown, etc) exists, shall be surrounded by a suitable bund capable of containing the entire contents of the equipment. An independent drainage system shall be provided which collects potentially contaminated water and pipes it to a proprietary packaged treatment system.

15.5 ROAD AND YARD PAVING

All plant roads shall be reinforced concrete with an approved joint system. The road cross sections shall be sloped to achieve positive drainage.

Design vehicle loads for roads and pavement areas shall account for all construction and anticipated maintenance related traffic. The minimum acceptable wheel and lane load configuration for all site access and maintenance roads shall be the HS20-44 designation adopted by the American Association of State Highway and Transportation Officials (AASHTO), and described in the AASHTO Standard Specifications for Highway Bridges 16th edition, Division I – Design, Section 3.7.

16.0 MAINTENANCE FACILITIES

16.1 GENERAL

The Contract for the supply and construction of the Power Plant shall include operational and maintenance components.

The Power Plant Contactor will operate and maintain the power plant through the first major maintenance overhaul cycle for the main turbines or engines. Refer to section 1.12 of this specification for details of the operation and maintenance contract.

16.2 TOOLS AND EQUIPMENT

The following workshop tools and equipment shall be provided under this contract.

16.2.1 VEHICLES

- Forklift, 4 tonne capacity
- Mobile crane truck (4WD, all-terrain capable) with 2 tonne crane and 2 tonne deck
- Tractor with front-loading bucket

16.2.2 WORKSHOP MACHINES

- Radial arm drill
- Drill press, 25 mm capacity
- Milling machine
- Hydraulic press
- Lathe

16.2.3 PORTABLE ELECTRIC AND PNEUMATIC POWERED HAND TOOLS

- Drills
- Grinders

16.2.4 WELDING EQUIPMENT

- Manual arc welding
- MIG/TIG welder plant
- LPG flame plant with selection of burners
- Masks, goggles, gloves, consumables

16.2.5 LIFTING EQUIPMENT

- Engine rigging/lifting tools

- Block and tackle with ropes
- Jig tools and specialist boring and facing repair machines
- Hydraulic rams and set of tools for recommended requirements
- Full sets of hand tools including rigging and hauling items for general workshop use

16.2.6 GENERAL HANDLING EQUIPMENT

- Pipe fitting and holding devices—general requirements
- Work benches
- Vice
- Wheel pulls
- Clamps

16.2.7 PORTABLE EQUIPMENT

- Generators 2 × 4 kW for tools and emergency lighting
- Pumps as required
- Fans and blowers
- LPG fired hot air blower/heater

16.2.8 ENGINE TEST AND MONITORING EQUIPMENT

- Endoscope- or similar inspection scope with digital camera
- Acoustic monitor —engine performance monitor
- Portable flue gas analyzer and leakage gas detector
- Portable gas detectors
- Portable vibration recording and analysis unit

16.2.9 ELECTRICAL AND INSTRUMENT TEST EQUIPMENT

- Relay test injection set
- Electrical instrument calibration set—standard capability
- Pressure gauge and transducer test / calibration set—standard capability
- 15 kV insulation test set
- HV test set AC VLF /DC as necessary and appropriate
- Low resistance test set—contact /continuity tester
- Portable ammeters and voltmeters-various for each technician
- Earth testing set
- HV test probes and HV phasing test set
- Insulation oil test set

- Portable data logger/disturbance recorder
- PC with specialist relay software as necessary to provide diagnostic services for in-service relays

16.2.10 COMPUTER SUPPORT EQUIPMENT

- Data analyzer
- Data logger-system analyzer
- Signal analyzer
- Specialist engine management programmer unit if recommended or provided
- Network analysis software and additional PC for analysis and diagnostics
- Any other specialist tools recommended by specific supplier to service plant provided

16.2.11 OPERATIONAL SUPPORT EQUIPMENT

- Electrical earthing equipment
- Locking and isolation devices as necessary
- Portable radio communications devices- personal hands free communications included in noise protection if necessary
- Noise protection for all staff
- Toilet and health protection within plant—separate staff areas for facilities

16.2.12 PERSONAL PROTECTION EQUIPMENT FOR ALL ASPECTS OF PLANT

- Gas—Fuel
- Heat—engine and steam raising-exhaust /turbo
- Noise—earmuffs, noise defenders
- Electrical—gloves and insulated covers
- Compressed air—face shield and covers
- Security
- Weather environment—clothing and protection from elements
- Falls and slips—walkways and stairs

16.2.13 CHEMICAL LABORATORY EQUIPMENT

- Handheld gas analyzers

16.2.14 MANUFACTURERS' SPECIAL TOOLS

- As recommended by Power Plant Contractor

APPENDIX 1

SCHEDULE OF TECHNICAL DATA AND PERFORMANCE GUARANTEES

Schedule of Technical Data

Tenderer's Name _____

1 **Process Guarantees**

Power output for the Power Plant shall be measured at the high voltage side of the step-up transformer and shall be between 100 MWe and 105MWe. The Tenderer is to set out below details of the equipment selected for this Tender, provide guaranteed minimum performance values for the selected equipment, and describe the proposed power plant's configuration. This Schedule of Technical Data is set out to cover various options of prime movers, including Combined Cycle Gas Turbines in combination with Steam Turbines and also lean burn gas reciprocating engines. Tenderers are to provide information for their selected equipment or state "N/A" in those sections that are not applicable.

2 **Plant Technical Information**

Tenderer to provide a brief description of proposed Power Plant, Auxiliaries, and peripheral equipment.

_____

3 **Tenderer to specify the major plant items:**

Equipment Item	Manufacturer	Model no. / Type
Gas turbine (GT)		
Steam turbine		
Gas engine (GE)		

Equipment Item	Manufacturer	Model no. / Type
Generator—GT or GE		
Generator—steam turbine		
Heat Recovery Steam Generator (HRSG)		
Air cooled condenser		
Low voltage switchgear		
High voltage switchgear		
11/110 kV step-up transformers		
Auxiliary boiler		
Deaerator		
Hot water circulating pumps		
High voltage switchgear for Power Plant		
High voltage switchgear for DABM substation		
Control system		
High voltage transmission line		

4 Drawings to be provided with Tender

4.1 Power Plant layout showing major plant items such as gas engines, gas turbines, steam turbines major ducts, inlets, exhaust stacks, HRSGs, buildings, switchrooms, and yards in outline

4.2 Two view elevations with cross-sections of each view inside the building showing major plant items

4.3 Piping and instrumentation diagrams of the major systems

4.4 Heat balance for the Plant at full power

4.5 High voltage switchroom and yards with proposed location of cables to DABM substation and to the Gas Conditioning Plant

4.6 Control room layout

4.7 Single line electrical diagram including protections

5 Contractor and plant equipment supplier experience

The Tenderer shall provide at least two references of similar size power plant projects they have managed the construction of using similar prime movers to those specified in this Tender over the last 10 years and have been in operation for the last three years. The Tenderer is to itemize their experience with the various equipment manufacturers and suppliers of the principal plant items employed in these contracts Information on the specified power plants constructed is to include data on availability, produced generation, reliability, and unplanned shutdowns and failures of a technical nature in the last 3 years.

6 Detailed technical information

The Tenderer is to fill out the following technical questionnaire for Tender analysis purposes. Any information not submitted with this questionnaire is to be made available at the time of Contract negotiation.

POWER PLANT EQUIPMENT TECHNICAL DATA		
Item	**Equipment or parameter**	**Tenderer's Response**
	The following data sheets, drawings, performance curves and correction curves shall be provided by the Tenderer	Tenderer is to provide data as requested against the equipment or parameter requested or indicate where in the Tender the requested information may be found.
6.1	**Gas turbines** (Performance at ISO conditions) Quantity Manufacturer Model no. / type Single or multiple shaft Guaranteed generator output at site conditions Guaranteed heat rate at site conditions Fuel consumption Minimum fuel pressure at GT gas train Combustion air flow rate Inlet air filter type Is inlet air anti-icing system fitted? If yes, method of anti-icing to be employed Inlet fogging or inlet air cooling fitted? If yes, describe cooling system Turbine RPM Generator RPM Governor manufacturer /Model Compressor / turbine wash facility fitted Duct firing fitted Gas flow rate to duct burners Fire protection system fitted Type (CO_2, deluge, etc.) Fire detectors fitted Smoke High temperature UV Silencer fitted Silencer manufacturer GT starter Type Manufacturer Power or air consumption	_____ _____ _____ _____ _____ MW _____ kJ/kWh _____ Nm^3/s _____ Bar g _____ Nm^3/s _____ _____ Yes/No _____ _____ Yes/No _____ _____ _____ RPM _____ RPM _____ _____ Yes/No _____ Yes/No _____ Nm^3/s _____ Yes/No _____ _____ Yes/No _____ _____ _____ _____ Yes/No _____ _____ _____ _____kW or Nm^3/min
6.2	**Gas turbine generators** Speed Make	_____ RPM _____

POWER PLANT EQUIPMENT TECHNICAL DATA		
Item	**Equipment or parameter**	**Tenderer's Response**
	Type	_____
	Applicable standards	_____
	Voltage	_____ kV
	Frequency	_____ Hz
	Maximum overspeed	_____ %
	Noise at 1 m	_____ dBA
	Stator and exciter winding insulation class	_____ F or B
	Stator and exciter temperature rise within class	_____ F or B
	Rotor winding insulation class	_____ F or B
	Rotor temperature rise within class	_____ F or B
	Cooling type	_____
	Maximum temperature of air/water	_____ ºC
	Short circuit ratio	_____
	Maximum rated output of generator at 45 ºC ambient at 0.8 power factor	_____ MW
	Ambient temperature at which any degradation of output is experienced	_____ ºC
	Exciter	_____
	Type	_____
	Make	_____ V
	Voltage	_____ %
	Voltage adjustment range	_____ %
	Voltage adjustment accuracy	_____ V
	Maximum forcing voltage for 10 sec	_____ Amps
	Current	_____ Amps
	Maximum forcing short circuit current 10 sec	
6.3	**Heat Recovery Steam Generators**	
	No of gas turbines per HRSG	_____
	Manufacturer	_____
	Model / type	_____
	HP generated steam flow rate	_____ kg/s
	HP steam pressure	_____ Bar g
	HP steam temperature	_____ ºC
	LP generated steam flow rate	_____ kg/s
	LP steam pressure	_____ Bar g
	LP steam temperature	_____ ºC
	Feed water temperature	_____ ºC
	Design maximum inlet gas temperature	_____ ºC
	Design outlet gas temperature	_____ ºC
	Design maximum flue gas mass flow rate	_____ kg/s
	Duct firing fitted	_____ Yes/No
	Gas firing rate	_____ Nm^3/s
	Economizer fitted	_____ Yes/No
	Design heat transfer rate—full power	_____ MW
	Water off economizer temperature	_____ ºC

POWER PLANT EQUIPMENT TECHNICAL DATA		
Item	**Equipment or parameter**	**Tenderer's Response**
	HP steam drum	
	Design pressure	_____ Bar g
	Design temperature	_____ ºC
	Volume	_____ m^3
	Blowdown heat recovery fitted	_____ Yes/No
	LP steam drum	
	Design pressure	_____ Bar g
	Design temperature	_____ ºC
	Volume	_____ m^3
	Blowdown heat recovery fitted	_____ Yes/No
	HRSG bypass damper	
	Manufacturer	_____
	Model no.	_____
	How actuated?	_____
	Design maximum temperature	_____ ºC
	Exhaust silencer fitted	_____ Yes/No
	Manufacturer	_____
	Model no.	_____
	Exhaust stack	
	Proposed height and diameter	_____ m × m
	Materials of construction	_____
	Insulation and sheathing	_____
	Bypass stack	
	Proposed height and diameter	_____ m × m
	Materials of construction	_____
	Insulation and sheathing	_____
	Design code applicable to pressure parts	_____
	Proposed Inspection Authority	_____
6.4	Deaerator	
	Manufacturer	_____
	Operating pressure	_____ Bar g
	Operating temperature	_____ ºC
	Volume	_____ m × m
	Design code applicable to pressure parts	_____
	Proposed Inspection Authority	_____
6.5	Start up boiler and gas fired hot water generator	
	Proposed boiler operating pressure	_____ Bar g
	Steam / water temperature	_____ ºC
	Gas consumption rate	_____ Nm^3/s
	kW hot water available for HW circuit	_____ kW
	Design code applicable to pressure parts	_____
	Proposed Inspection Authority	_____

POWER PLANT EQUIPMENT TECHNICAL DATA		
Item	**Equipment or parameter**	**Tenderer's Response**
		_____
6.6	**Steam turbine and condenser** No. of HRSGs per steam turbine Steam turbine manufacturer Steam turbine Model no. LP auxiliary steam bleed fitted? Power output at guarantee conditions Heat rate at guarantee conditions Air cooled condenser Design condensing temperature with maximum design ambient air temperature. Maximum ambient temperature condenser will not cause derating in power plant output Approximate physical dimensions of each condenser Total site plan area of condensers Parasitic cooling fan power Design heat rejection rate Anti-freeze provisions—describe	_____ _____ _____ _____ _____ MW _____ kJ/kWh _____ ºC _____ ºC _____(w × l × h)m _____ m × m _____ MW _____ MW _____ _____
6.7	**Feed water system** Boiler feedwater pumps Quantity per HRSG Manufacturer Model no. Type Design flow rate Design head	 _____ _____ _____ _____ _____ kg/s _____ mH
6.8	**Condensate system** Condensate return pumps Quantity Manufacturer Model no. Type Design flow rate Design head	 _____ _____ _____ _____ _____ kg/s _____ mH
6.9	**Steam turbine generators** Quantity Make Type Applicable standards Speed Voltage Frequency Maximum overspeed Noise at m	 _____ _____ _____ _____ _____ RPM _____ kV _____ Hz _____ % _____ dBA

POWER PLANT EQUIPMENT TECHNICAL DATA		
Item	**Equipment or parameter**	**Tenderer's Response**
	Stator and exciter winding insulation class	_____ F or B
	Stator and exciter temperature rise within class	_____ F or B
	Rotor winding insulation class	_____ F or B
	Rotor temperature rise within class	_____ F or B
	Cooling type	_____
	Maximum temperature of air/water	_____ ºC
	Short circuit ratio	_____
	Maximum rated output of generator at 45 ºC ambient at 0.8 power factor	_____ MW
	Ambient temperature at which any degradation of output is experienced	_____ ºC
	Exciter	
	Type	_____
	Make	_____
	Voltage	_____ V
	Voltage adjustment range	_____ %
	Voltage adjustment accuracy	_____ %
	Maximum forcing voltage for 10 sec	_____ V
	Current	_____ Amps
	Maximum forcing short circuit current 10 sec	_____ Amps
6.10	**Gas engines**	
	No. of gas engines supplied	_____
	Engine shaft power at full power	_____ MW
	Power output at generator terminals at full power	_____ MW
	Temperature full power value is measured	_____ ºC
	Manufacturer	_____
	Model no.	_____
	Engine/generator RPM	_____ RPM
	Gas consumption rate at full power with gas flow coefficient (CV) specified for gas exiting Gas Conditioning Plant	_____ Nm^3/s
	Heat rate for engine generator combination at full power	_____ kJ/kWh
	Thermal efficiency of prime mover at full power	_____ %
	kW to be dissipated by engine block cooling system at full power	_____ kW
	kW to be dissipated by intercooler cooling water at full power	_____ kW
	kW to be dissipated by lube oil cooler at full power	_____ kW
	kW from hot fluid circuit for intake air heating/ anti-icing on –2 ºC ambient	_____ kW
	Exhaust gas mass flow rate at full power	_____ kg/s
	Exhaust temperature at full power	_____ ºC
	Gas supply	
	Minimum gas supply pressure	_____ Bar g
	Maximum gas supply pressure	_____ Bar g

POWER PLANT EQUIPMENT TECHNICAL DATA		
Item	**Equipment or parameter**	**Tenderer's Response**
	Maximum rate of gas supply pressure change	_____ bar/min
	Gas supply filter arrestance, % at 0.3 micron	_____ %
	Control	
	Method of control (power line communications, proprietary control system, etc.)	_____
	Method of starting	_____ Bar g
	For air start, required air pressure	_____ m^3
	Estimate volume of air to start	_____ m^3
	Volume of start air receiver to be provided	_____ Nm^3/hr
	Compressor capacity to charge start receiver.	_____ kW
	Compressor power	_____ kW
	Air dryer power	_____ kW
	Fin fan coolers parasitic fan power per engine at 45 ºC ambient	_____ dBA
	Noise level 2 meters from engine, dBA	_____ dBA
	Noise level 1 meter from combustion air inlet, dBA	_____ Yes/No
	Automatic lube oil level fill and level control fitted	_____ Yes/No
	Engine crankcase sump oil pump out facility allowed for	_____ m^3
	Volume of fresh oil tank to be provided	_____ m^3
	Volume of waste oil tank to be provided	
6.11	**Gas engine generators**	
	Quantity	_____
	Speed	_____ RPM
	Make	_____
	Type	_____
	Applicable standards	_____
	Voltage	_____ kV
	Frequency	_____ Hz
	Maximum overspeed	_____ %
	Noise at 1 m	_____ dBA
	Stator and exciter winding insulation class	_____ F or B
	Stator and exciter temperature rise within class	_____ F or B
	Rotor winding insulation class	_____ F or B
	Rotor temperature rise within class	_____ F or B
	Cooling type	_____
	Maximum temperature of air/water	_____ ºC
	Short circuit ratio	_____
	Maximum rated output of generator at 45 ºC ambient at 0.8 power factor	_____ MW _____ ºC
	Ambient temperature at which any degradation of output is experienced	

POWER PLANT EQUIPMENT TECHNICAL DATA		
Item	**Equipment or parameter**	**Tenderer's Response**
	Exciter	
	Type	
	Make	
	Voltage	V
	Voltage adjustment range	%
	Voltage adjustment accuracy	%
	Maximum forcing voltage for 10 sec	V
	Current	Amps
	Maximum forcing short circuit current 10 sec	Amps
6.12	**Supplementary generation utilizing gas engine waste heat – if offered**	
	Type of process (Organic Rankine Cycle, Kalina, etc.) Brief description	
	Manufacturer	
	Model no. of plant	
	Rated output at maximum main power plant output at 45 ºC ambient	MW
	Method of cooling	
6.13	**Hot heat transfer fluid circulation system**	
	Design hot fluid temperature	ºC
	Design thermal capacity	MW
	How produced (steam/water heat exchanger, steam injection through control valve, EHRU, etc.)	
	Specify heat transfer fluid to be employed	
	Specific heat of heat transfer fluid	kJ/kg ºC
	Freezing temperature of selected fluid	ºC
	Pipework, design pressure	bar
	Design energy rate to be transferred to Gas Conditioning Plant for process heating	MW
	Flow rate of heat transfer fluid to Gas Conditioning Plant	kg/s
	If gas engines with EHRUs are selected:	
	EHRU Manufacturer	
	Model Number and type	
	Number of EHRU to be employed	MW
	Rated heat recovery rate, each	ºC
	Exhaust gas temperature into EHRU	ºC
	Exhaust gas temperature out of EHRU	kg/s
	Design exhaust gas mass flow rate	
	Heat transfer fluid temperature at inlet to EHRU	ºC
	Heat transfer fluid temperature at outlet to EHRU	ºC
	Heat transfer fluid circulation pumps	
	Quantity	

POWER PLANT EQUIPMENT TECHNICAL DATA		
Item	**Equipment or parameter**	**Tenderer's Response**
	Manufacturer Model no. Type Design flow rate Design head	_____ _____ _____ kg/s _____ mH
6.14	**Demineralized water consumers** Tenderer to specify consumption points of demineralized water and maximum consumption rate. Boiler feed water including blowdown/boiler GT inlet air cooling per GT Addition to combustion chamber per GT Total blowdown Others_____ Design normal demineralized water consumption rate for entire power plant at full power Design peak demineralized water consumption rate.	_____ kg/s _____ kg/s _____ kg/s _____ kg/s _____ kg/s _____ kg/s _____ kg/s
6.15	**Water treatment plant** Primary treatment Brief description of treatment method Manufacturer Model or type Number of trains Rated capacity of each train Demineralized water plant—if required Manufacturer Type (RO, anion/cation resin etc.) No. of trains Rated capacity of each train Production availability—% of cycle Regeneration down time for one train Potable water treatment Manufacturer Technology employed Sterilizing chemical (CL_2, NaOCL, etc.) Deodorization and final filtration Daily production rate Storage Raw water on site (excluding Gerquduq) Primary treated water Demineralized water	_____ _____ _____ _____ _____ _____ _____ _____ kg/s _____ _____ _____ _____ kg/s _____ % _____ hours _____ _____ _____ _____ _____ m^3/day _____ m^3 _____ m^3 _____ m^3 _____ m^3

POWER PLANT EQUIPMENT TECHNICAL DATA		
Item	**Equipment or parameter**	**Tenderer's Response**
	Acid Caustic	_____ m^3
6.16	**Fuel Gas System**	
	Design operating pressure	_____ Bar g
	Design pressure for pressure components	_____ bar
	Allowable pressure variation	
	During load change	_____ bar
	Steady operating conditions	_____ bar
	Allowable rate of pressure variation	_____ bar/min
	Minimum pressure required at boundary from Gas Conditioning Plant	_____ Bar g
	Allowable temperature range	_____ ºC
	Confirm that pressure available from Gas Conditioning Plant exceeds minimum pressure required at boundary	_____ Yes/No
	If not, specify gas compressors required to deliver required minimum gas pressure below.	
	Gas Compressors	_____
	Quantity	_____
	Manufacturer	_____
	Model no.	_____
	Type	_____
	Prime mover	_____ kW
	Power of prime mover	_____ Nm^3/hr
	Design flow rate	_____ Bar g
	Design inlet pressure	_____ Bar g
	Design outlet pressure	
	For each GT or GE unit:	_____ Nm^3/s
	Maximum gas consumption rate—start up	_____ Nm^3/s
	Maximum gas consumption at full power-steady	_____ Nm^3/s
	Minimum gas flow rate at ignition	_____
	Gas metering at each GT or GE	_____
	Quantity	_____
	Manufacturer	
	Type of meter	_____
	Gas filtration at each GT gas trains	_____
	Quantity	_____
	Manufacturer	_____
	Type	
	Arrestance (% at xx microns)	_____
	Liquids and washings drain vessels	_____ m^3
	No. per GT or GE	
	Design standard	

POWER PLANT EQUIPMENT TECHNICAL DATA		
Item	**Equipment or parameter**	**Tenderer's Response**
	Volume Knock-out vessels No. per GT or GE Design standard Drain vessels No. per GT or GE Design standard Piping material On base Off base	_____ _____ _____ _____ _____ _____
6.17	**Custody transfer metering and pressure reduction station** No of reduction and metering trains Design gas flow rate through each train Maximum allowable inlet pressure to station Design reduced pressure at meter station Gas meter type Gas meter manufacturer Gas meter model no. Main pressure reduction valve type Manufacturer Model no. Emergency shut down valve—type ESD valve manufacturer ESD valve model no. Gas heater manufacturer kW of heat to be transferred at maximum flow	 _____ _____ Nm^3/s _____ Nm^3/s _____ Bar g _____ _____ _____ _____ _____ _____ _____ _____ _____ _____ _____ kW
6.18	**11 kV Switchgear** Make Model Manufacturer Voltage rating Power frequency voltage rating Impulse voltage rating Busbar current rating Busbar insulation Board short circuit rating. Where/when tested Circuit breakers Circuit breaker breaking medium (SF_6 or vacuum)	 _____ _____ _____ _____ kV _____ kV _____ kV _____ Amps _____ _____ kAmps _____ _____

POWER PLANT EQUIPMENT TECHNICAL DATA		
Item	**Equipment or parameter**	**Tenderer's Response**
	Circuit breaker ratings	_____ Amps
	Step-up transformer	_____ Amps
	Generators	_____ Amps
	Auxiliary transformers	_____
	Withdrawal method	
	CTs	
	Type	_____
	Make	_____
	Ratios	_____
	Class	_____
	VTs	
	Type	_____
	Make	_____
	Ratios	_____
	Class	_____
	Isolation system	_____
	Board dimensions	_____(w × h × l)m
	Space required in front for withdrawal	_____ mm
6.19	**400 V switchgear**	
	Make	_____
	Model	_____
	Manufacturer	_____
	Voltage rating	_____ V
	Bus bar current rating	_____ Amps
	Bus bar insulation	_____
	Board short circuit rating	_____ kAmps
	Where/when tested	_____
	Circuit breaker ratings	
	Incomer	_____ Amps
	Auxiliary transformers	_____ Amps
	Other	_____ Amps
	Board dimensions	_____(w × h × l)m
6.20	**Black start generator**	
	Engine	
	Make	_____
	Model	_____
	Manufacturer	_____
	Output at 20 °C	_____ kW
	Output at 45 °C	_____ kW
	No. of cylinders	_____
	Swept volume	_____ Ltrs
	Speed	_____ RPM
	Fuel	_____
	Generator	_____
	Make	_____
	Model	_____
	Manufacturer	_____ kW

POWER PLANT EQUIPMENT TECHNICAL DATA		
Item	**Equipment or parameter**	**Tenderer's Response**
	Output at 20 °C	_____ kW
	Output at 45 °C	
	Skid	_____(lx w × h)m
	Dimensions	_____ kg
	Weight	
	Diesel day tank	_____ m^3
	Type Capacity	
		_____
	Start system and capacity	_____
6.21	**DC and UPS**	
	Batteries	
	Make	_____
	Type	_____
	Manufacturer	_____
	Voltage	_____ V
	Number	_____
	Design current	_____ Amps
	Design stand up time	_____ Hours
	Charger	
	Make	_____
	Type	_____
	Manufacturer	_____
	Current rating	_____ Amps
	UPS	
	Make	_____
	Type	_____
	Manufacturer	_____
	Voltage	_____ V
	Rating	_____ Amps
	Stand up time	_____ Hours
6.22	**Protection**	
	Make	_____
	Type	_____
	Manufacturer	_____
	Digital or analog	_____
	Proposed models	
	Step-up transformer	_____
	Generator	_____
	Auxiliary transformer	_____
	11 kV feeders	_____
	110 kV switchyard	_____

POWER PLANT EQUIPMENT TECHNICAL DATA		
Item	**Equipment or parameter**	**Tenderer's Response**
6.23	**Auxiliary transformers**	
	Make	_____
	Type	_____
	Manufacturer	_____
	ONAN rating	_____ kVA
	ONAF rating	_____ kVA
	Ratio	_____
	Connection vector	_____
	Taps off line no/range	_____ /%
	Dimensions	_____ (l × w × h) m
	Oil volume	_____ l
	Weight	_____ kg
6.24	**Main step-up transformer**	
	Make	_____
	Type	_____
	Manufacturer	_____
	ONAN rating	_____ MVA
	ONAF rating	_____ MVA
	Rating at 45 °C ambient	_____ MVA
	Voltage ratio	_____
	Power frequency test voltage	_____ kV
	Impulse test voltage.	_____ kV
	Connection vector	_____
	Tap changer make	_____
	Tap changer type	_____
	Tap changer current rating	_____ Amps
	Tap number	_____
	Tap range	_____ %
	Dimensions overall	_____ (l × w × h) m
	Oil volume tank, conservator and tap changer	_____ l
	Weight total with oil	_____ l
	Shipping weight	_____ kg
	Shipping dimensions	_____ kg
		_____ (l × w × h) m
6.25	**110 kV Switchgear**	
	Circuit breakers	
	Make	_____
	Type	_____
	Manufacturer	_____
	Voltage	_____ kV
	Current rating	_____ Amps
	Rated frequency	_____ Hz
	Interrupting medium (SF_6 or Vacuum)	_____
	Short circuit withstand	_____ kAmps
	Maximum interrupting current rating	_____ kAmps
	Maximum interrupting time	_____ ms
	Impulse test voltage	_____ kV
		_____

POWER PLANT EQUIPMENT TECHNICAL DATA		
Item	**Equipment or parameter**	**Tenderer's Response**
	Disconnectors and earthing switches	_____
	Make	_____
	Type	_____ kV
	Manufacturer	_____
	Impulse test voltage	_____ Amps
	Means of operation	_____ kAmps
	Current rating	
	Short circuit withstand	
		_____
	Current transformers	_____
	Make	_____
	Type	_____ Amps
	Manufacturer	_____ kAmps
	Current rating	_____
	Short circuit	_____
	Ratio	
	Class	
		_____
	Voltage transformers	_____
	Make	_____
	Type	_____ Amps
	Manufacturer	_____ kAmps
	Short circuit	_____
	Ratio	
	Class	
		_____
	Surge arrestors	_____
	Make	_____
	Type	_____ kAmps
	Manufacturer	_____ kV
	Short circuit	
	Impulse voltage test	
		_____
	Busbars and conductors	_____
	Make	_____
	Type	_____
	Manufacturer	_____ Amps
	Material	_____ kAmps
	Current rating	
	Short circuit	
		_____
	Insulators	_____
	Make	_____
	Type	_____ kV
	Manufacturer	
	Impulse voltage test	

POWER PLANT EQUIPMENT TECHNICAL DATA		
Item	**Equipment or parameter**	**Tenderer's Response**
6.26	**Distributed Control System** Manufacturer Type/model CPU module model/part no. Servers - Make/model - RAM size - Hard disk capacity HMI PCs - Make/model - Screen size - Screen resolution Engineering workstation - Make/model IPS make/model Plant bus type GPS clock make/model Printer make/model Turbine/engine controller - Make/model Vibration monitoring equipment - Make/model	_____ _____ _____ _____ _____ MB _____ GB _____ _____ _____ _____ _____ _____ _____ _____ _____ _____
6.27	**SCADA** RTU - Make/model Communications protocols supported Communications protocols included	 _____ _____ _____
6.28	**Communications system** LAN equipment makes/models (list) **Fiber optic cable** Manufacturer Type **Private Automatic Branch Exchange (PABX)** Make/model **Synchronous Digital Hierarchy (SDH) Equipment** Make/model Fiber Interface module part number Station side interface modules part number	_____ _____ _____ _____ _____ _____ _____ _____ _____
6.29	**Instrumentation** Sensors manufacturer/model: - Pressure - Temperature - Flow (general) - Flow (metering) - Level	 _____ _____ _____ _____ _____

POWER PLANT EQUIPMENT TECHNICAL DATA		
Item	**Equipment or parameter**	**Tenderer's Response**
	Transducers manufacturer/model: - Pressure - Temperature - Flow (general) - Flow (metering) - Level	_____ _____ _____ _____ _____
6.30	**Replacement of missing high voltage transmission line** Length of conductor to be replaced Red phase Blue phase Yellow phase Neutral /earth Phase conductor cross-section Neutral /earth conductor cross-section Conductor material (aluminum / copper)	 _____ m _____ m _____ m _____ m _____ mm^2 _____ mm^2 _____

7 Drawings

The following drawings are to be provided as a minimum for Tender acceptance and assessment. The Tenderer is at liberty to provide further drawings with the Tender to provide better detail the Tender.

Power Plant Tender Drawings		
Item	**Drawing description**	**Location or reference No of drawing**
7.1	**Process flow diagrams** Process flow diagrams of air, gas, water, steam, cooling systems, and hot water reticulation showing principal flow streams with temperatures, pressures, flow rates and energy transferred	 _____ _____ _____ _____
7.2	**Major plant equipment** Outline drawing in plan and two orthogonal elevations of Gas Turbine and generator including inlet ducts, HRSG, and stack—if CCGT option selected Outline drawing in plan and two orthogonal elevations of Steam Turbine including generator and condenser if fitted to steam turbine—if CCGT option selected Outline drawing in plan and two orthogonal elevations of Gas Engine including generator and acoustic enclosure if fitted—if Gas Engine option selected.	 _____ _____ _____ _____ _____ _____ _____ _____ _____

Power Plant Tender Drawings		
Item	**Drawing description**	**Location or reference No of drawing**
7.3	**Proposed Power Plant Layout**	
	Drawing showing site layout of buildings, major equipment items outlines, cooling towers, fin fan units, exhaust stacks, emergency diesel generator, water treatment plant area, gas metering station, switchyard, roads, and principal dimensions	_____ _____
	Drawing showing intended plant layout with two orthogonal elevations along major building principal axes	_____ _____
	Drawing showing two orthogonal elevations of power plant buildings	_____ _____
	Drawing of switchyard outlining equipment and cable routes	_____ _____
	Drawing showing intended cable routes between Gas Conditioning Plant, Power Plant, and DABM substation	_____ _____
7.4	**Electrical drawings and diagrams**	
	Electrical single line diagrams for switchyard, plant electrical systems, black start emergency generator with ratings of each piece of equipment	_____
	Principal protection and metering block diagrams for generators, power plant transformers, high voltage electrical systems including overhead lines	_____
	Single line block diagram for back up battery and UPS	_____
	Single line diagram of metering system	_____
	Brief description of design philosophy applied for sizing transformers, UPS, black start generator and switchgear	_____
	Brief description of generator and excitation system including block diagrams	_____
	General arrangement drawings of generator main connections showing generator, generator step-up transformers and excitation transformer.	_____
	Data sheets for all medium and high voltage equipment	_____
7.5	**Control System drawings, diagrams, data sheets**	
	Block diagram of proposed DCS system showing major power plant items connected to DCS	_____
	Brief description of DCS including capabilities, features, hardware, software and links to remote SCADA	_____

Power Plant Tender Drawings		
Item	**Drawing description**	**Location or reference No of drawing**
	Basic schematics of the power plant and common and common auxiliary plant control systems Data sheets for instrumentation and major items of control equipment	_____ _____

8 Plant performance and correction curves

The following data and information is to be provided with the Tender to analyze the offered Power Plant's capability.

Power Plant Performance Data and Correction curves		
Item	**Data required with Tender**	
8.1	**Gas Turbine** 1. GT output at generator versus ambient temperature 2. GT output correction to applied with ambient relative humidity, 0 to 100% 3. GT output correction for altitude 4. GT exhaust mass flow rate versus ambient temperature 5. GT exhaust temperature versus output 6. GT exhaust mass flow rate versus output 7. GT fuel flow versus output 8. GT output versus fuel CV 9. Performance degradation (recoverable and non-recoverable) in output and heat rate at 4000, 8000, 12000, and 18000 hours after commissioning 10. Curves specified in Section 5.3.4 API 616 where not covered above	**Where data will be found** _____ _____ _____ _____ _____ _____ _____ _____ _____4000 hr _____8000 hr _____12000 hr _____18000 hr _____
8.2	**HRSG** 1. Steam flow generated versus GT load 2. Steam temperature versus GT load 3. MW of energy transferred versus GT load. Feed water temperature to be specified. 4. Start-up diagram,(cold, warm and hot)	**Where data will be found** _____ _____ _____ _____

Power Plant Performance Data and Correction curves		
Item	**Data required with Tender**	
	5. Exhaust gas Δ P over HRSG versus GT load	_____
8.3	**Steam turbines** 1. ST output versus condensing pressure and/or temperature 2. ST steam mass flow rate versus turbine output 3. ST heat rate versus condensing pressure 4. All data sheets as specified in API 612	**Where data will be found** _____ _____ _____ _____
8.4	**Air cooled steam condenser—if selected** 1. Provide set of curves of energy transferred to atmosphere and condensing pressure over a range of ambients from –20 ºC to 45 ºC	**Where data will be found** _____
8.5	**Gas Engines—if selected** 1. GE output at generator terminals versus ambient temperature 2. GE output at generator terminals versus ambient pressure 3 GE heat rate versus power setting	**Where data will be found** _____ _____ _____
8.6	**Exhaust Heat Recovery Units** Energy recovery rate (MW per unit) from gas engine at full power	**Where data will be found** _____
8.7	**Anticipated total generation of offered plant over one typical year taking into account seasonal effects, but ignoring performance degradation factors and unavailability.** Hours - Maximum hours per month available for generation Temp - Average daytime temp ºC Heat Rate - Heat Rate kJ/MWh at average day temp and 477 m amsl Output - Generated MWhe exported at average daytime temperature The values for generation plant heat rate and generated MW in Columns C and D, below, are the sum of the heat rates for the total generation package (gas turbines plus steam turbine, or gas engines or whatever other generators are part of the mix) on the site at full load at the given ambient temperature, i.e., it is the total quantity of fuel consumed and the power generated and exported at the given ambient temperature including power consumed by all parasitic loads, such as high pressure hot water for amine generation and gas heating, fin fans, circulation pumps, air compressors, air driers and auxiliary energy consumption such as air conditioning, water treatment, pumping, Power Plant lighting, heating and cooling. The parasitic load shall include operation of the control room. The parasitic load of the Gas Conditioning Plant shall be considered as being fixed at 15 MW thermal irrespective of season. The ambient temperatures in column B are the average 24 hr daily temperatures as measured by USGS in 2005.	

Power Plant Performance Data and Correction curves					
Item	**Data required with Tender**				
	Month	**Hours**	**Temp**	**Heat Rate**	**Output**
		Col A	**Col B**	**Col C**	**Col D**
		hours	**ºC**	**kJ/MWh**	**MWh**
	Jan	744	2.7		
	Feb	672	5.1		
	Mar	744	10.5		
	Apl	720	17.3		
	May	744	22.7		
	Jun	720	27.8		
	July	744	30.2		
	Aug	744	28.2		
	Sept	720	23.2		
	Oct	744	16.6		
	Nov	720	10.4		
	Dec	744	5.9		
	Total	**8760**			

8.8 **Maximum Plant performance degradation factors for offered plant over Plant's first twenty years of operation.**

Degradation and availability factors to be based on original as new performance

Year	Degradation of output (recoverable and non-recoverable	Degradation of Heat rate (recoverable and non-recoverable	Availability
1	%	%	%
2	%	%	%
3	%	%	%
4	%	%	%
5	%	%	%
6	%	%	%
7	%	%	%
8	%	%	%
9	%	%	%
10	%	%	%
11	%	%	%
12	%	%	%
13	%	%	%
14	%	%	%
15	%	%	%
16	%	%	%
17	%	%	%
18	%	%	%
19	%	%	%
20	%	%	%

9 Performance Test procedures

Power Plant Guaranteed Performance –Testing Method		
Item	**Data required with Tender**	**Where data is to be found**
	Tenderer is to provide description of test procedures to be applied for acceptance testing	

10 Plant Guarantees

10.1	**Guaranteed Overall Plant Performance** Output performance is to be measured at the 110 kV side of the main step-up transformer at site conditions as per the Technical Specifications. For plant performance testing, energy supplied to the Gas Conditioning Plant is to be generated by gas firing the boiler and isolating the steam supply to the hot water heat exchanger from the main steam range. Gas consumed by the boiler will not be included in the Power Plant gas consumption values for calculation of overall performance. If supplementary generation plant is offered to utilize waste heat from the gas engine option, the output of this plant should be noted alongside the main plant outputs below.	**Contractor to supply Data**
	Total gross plant output	_____ MW
	Gross plant heat rate	_____kJ/MW
	Total plant auxiliary loads	_____ MW
	Total net plant output	_____ MW
	Net plant heat rate	_____kJ/kWh
10.2	**Guaranteed Plant Availability** The Contractor shall guarantee the Power Plant be available for the minimum percentage of the possible available time in any one year as set out below. Unplanned outages figures to exclude outages caused by events outside the control of the Power Plant Contractor's Operation and Maintenance Contract. Unavailability percentage shall be referenced to an 8760 hour year.	
	Power plant overall availability—planned outages	___ %
	Individual generating unit basis—planned outages	___ %
	Power plant overall—unplanned outages	___ %
	Individual generating unit basis—unplanned outages	___ %
10.3	**The Tenderer guarantees the sound levels set out in the specification will not be exceeded.**	
	Location	Maximum sound level	Tenderer confirms proposal meets this criteria

	1 m from any surface of operating plant	86 dBA A weighted scale	
	1 m from exhaust duct, 2 m above grade or platform accessible by personnel	88 dBA A weighted scale	
	Site boundary	SPLA of L_{10} = 70 dBA	
	Control Room	SPLA not greater than 55 dBA	
	Location	Maximum sound level	Tenderer confirms proposal meets this criteria

11 Air Emission Levels

The Tenderer guarantees air emissions meet World Bank Group General Environmental Guidelines or local codes, whichever is the more stringent.

Air emission levels				
Compound	**50 % capacity**	**100% capacity**	**Concentration at the boundary—24 hour average**	**Concentration at the boundary—annual arithmetic mean**
SO_2	_____mg/Nm^3 _____ppmv	_____mg/Nm^3 _____ppmv	_____mg/Nm^3	_____mg/Nm^3
CO_2	_____mg/Nm^3 _____ppmv	_____mg/Nm^3 _____ppmv	_____mg/Nm^3	_____mg/Nm^3
CO	_____mg/Nm^3 _____ppmv	_____mg/Nm^3 _____ppmv		
NOx	_____mg/Nm^3 _____ppmv	_____mg/Nm^3 _____ppmv	_____mg/Nm^3	_____mg/Nm^3
Particulates	_____mg/Nm^3 _____ppmv	_____mg/Nm^3 _____ppmv	_____mg/Nm^3	_____mg/Nm^3
Other identifiable species				
	_____mg/Nm^3 _____ppmv	_____mg/Nm^3 _____ppmv		
	_____mg/Nm^3 _____ppmv	_____mg/Nm^3 _____ppmv		

12 Quality System and Standards

12 .1 Tenderer is to attach a copy of their Certified Quality System to ISO 9000.

Page number where this document may be found in the Tender_____

12.2 Tenderer is to list below the Standards and Codes to be employed in the proposal plant that.

Type of Standard (Mechanical, Civil, Electrical or General Design)	Sheberghan Power Plant _____
Standard No (e.g., ASME VIII Div 1)	**Name of Standard**
	If insufficient room, please copy this sheet and append to this document

13 Recommended spare parts and consumables

List of all spare parts and special tools (with prices) is to be included in the Tender. The spares list shall be divided into two lists, one for start-up and one for plant operation broken up by year.

14 General summary of the plant data

14.1 Tenderer is to provide a brief description below of the Power Plant process and technology to be employed, including benefits the proposed technology has over other technologies in the Afghanistan environment.

_____
_____
_____
_____
_____
_____
_____
_____
_____
_____
_____
_____
_____
_____
_____
_____
_____
_____
_____

14.2 Water treatment chemicals deliveries

Tenderer is to provide information below on the proposed method of delivering water treatment chemicals to the plant and method of unloading, storage and limitations on quantities that may be delivered in any one shipment or delivery.

_____
_____
_____
_____
_____
_____
_____
_____
_____

14.3 Waste chemicals and disposal

Tenderer is to list below waste chemicals from the process and describe the method of disposing of each chemical waste stream and the environmental impacts of the chemical or stream. Include method of treatment and disposal of water wastes, sewage, used lubricants and estimated flow rates of these streams.

_____
_____
_____
_____

14.4 Participants and Associates

Tenderer is to specify below all participants, partners, associates, and companies sub-contracted (or to be sub-contracted) and intended be used on the project

Service Provider	Check box if selected	Company Name	Status of relationship (Letter of Intent, Contracted, etc.)
Prime or Head Contractor			
Process Design and Engineering			
Geotechnical			
Environmental			
Civil Construction			
Mechanical Plant Fabricator			
Mechanical Plant Erector			
Electrical Installer			

Service Provider	Check box if selected	Company Name	Status of relationship (Letter of Intent, Contracted, etc.)
,Instrumentation Installer			
Commissioning			
O&M Contractor			
Other Contractors			

Attach a dossier clearly identifying the proposed Service Provider, their capabilities and experience in the design, erection, and operation of similar power plants, piped gas reticulation systems and water pumping and treatment systems.

Manning levels

The Tenderer shall provide information on expected manning levels for the proposed Power Plant:

Management	_____
Production Supervision	_____
Operators – skilled	_____
Operators – unskilled	_____
Maintainers – skilled	_____
Maintainers – unskilled	_____
Electricians	_____
Controls/SCADA specialist	_____
General hands	_____
TOTAL	_____

14.5 Project Schedule

The Tenderer is to attach a Project Schedule to the Proposal listing the anticipated major project tasks with their duration and anticipated start and finish times in relation to the signing of the Contract. An earliest finish and latest finish duration shall be provided along with any restrictions or conditions that would affect these durations.

14.6 Deviations from Specifications

The Tenderer is to list below any deviations from the specified plant or applicable construction Standard set out in the Specifications.

_____
_____
_____
_____
_____
_____
_____

APPENDIX 2

DRAWINGS

DRAWING LIST

ITEM NO	DRAWING NO	REV STATUS	TITLE
1	1020	D	Process Flow Diagram (0.18% H_2S)
2	1021	F	Gas Distribution Network
3	1022	F	Gerquduq Gas Gathering
4	1023A	G	Gerquduq H_2S Removal
5	1023B	F	Gerquduq Dehydration
6	1024	F	Power Plant
7	1025	G	Water Supply
8	1026	B	Gerquduq Chemical Dosing
9	1027	B	Gerquduq TEG Solvent Recovery
10	1028	C	Gerquduq Flare System
11	1029	C	Gerquduq Wastewater Treatment
12	1030	B	Gerquduq Fuel Gas System
13	1031	C	Yatimtaq Gas Production Station
14	1032	C	Combined Cycle Gas Turbine Power Plant
15	1414	F	Site Layout - General
16	1415	E	Plant, Equipment and Basic Piping Layout Power Station (Gas Engine Option) Option 1 (New Building)
17	1416	D	Plant, Equipment and Basic Piping Layout Gas treatment Plant Option 1 (New Building)
18	1511	F	Control System Block Diagram
19	1512	F	Power Plant 11kV Single Line Diagram
20	1513	D	Power Plant 400V Single Line Diagram

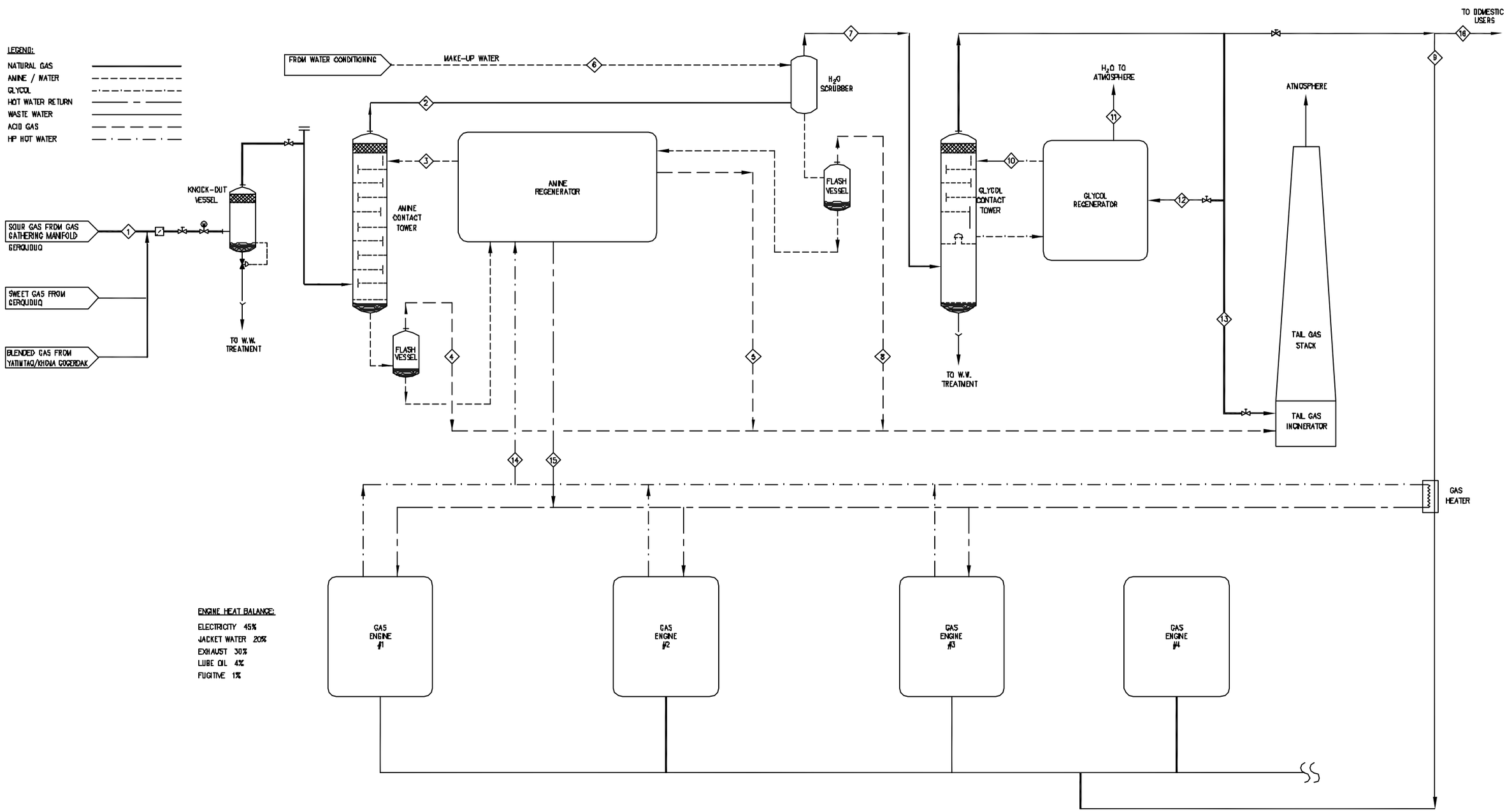

NORMAL OPERATION

	1	2	3	4	5	6	7	8	9	10	11	12	13	14	15	16
FLUID	SOUR GAS	WET GAS	AMINE	FLASH GAS	ACID GAS	WATER	WET GAS	FLASH GAS	TREATED GAS	GLYCOL	WATER VAPOUR	TREATED GAS	FUEL GAS	HTHW SUPPLY	HTHW RETURN	DOMESTIC
TEMPERATURE (°C)	48.0	48.6	48.0	67.8	60.0	21.1	47.4	48.1	32.6	32.5	88.5	32.6	32.6	140	120	32.6
PRESSURE (Barg)	30.0	29.0	29.7	5.2	0.3	0.5	29.0	0.5	28.0	28.5	0.0	28.0	28.0	5.0	4.5	28
FLOW (T/hr)	22.530	27.584	71.204	0.0112	4.3736	0.4188	27.608	0.00028	19.80	1.68	0.1288	25.424	0	280	280	7.8
CH4 (T/hr)	17.149	23.997	0	0.0084	0.0028	0	23.9974	0.00014	17.141	0.00014	0.0014	24.4314	0	0	0	6.9
H_2S (T/hr)	0.073	0.00014	0.0182	0	0.1022	0	0.00014	0	0.0001	0	0	0.00014	0	0	0	.0001
H_2O (T/hr)	0.031	0.154	36.26	0.00042	0.3038	0.4186	0.168	0	0.0003	0.0126	0.1288	0.0042	0	280	280	.0003
CO2 (T/hr)	4.630	2.5158	0.0266	0.0025	3.8834	0	2.5158	0.00014	1.787	0	0	0	0	0	0	.7
OTHER (T/hr)	0.647	0.9254	34.859	0.000	0.0014	0	0.9268	0.000	0.662	1.6674	0	0	0	0	0	.26

© Copyright Maunsell Limited, 2005.

This drawing is confidential and shall only be used for the purposes of this project.

No.	BY	DATE	DESCRIPTION	APPD
D	ES	OCT 05	UPRATED CAPACITY	
C	ES	AUG 05	ISSUED FOR TENDER (WAS DWG.1151)	WSC
B	ES	MAY 05	ISSUED FOR FINAL REPORT	WSC
A	PN	MAY 05	ISSUED FOR REPORT	WSC

Scales

N.T.S.

THE SIGNING OF THIS TITLE BLOCK CONFIRMS THE DESIGN AND DRAFTING OF THIS PROJECT HAVE BEEN PREPARED AND CHECKED IN ACCORDANCE WITH THE MAUNSELL QUALITY ASSURANCE SYSTEM CERTIFIED TO AS/NZS ISO 9001-2000

DESIGNED	NP	CHECKED	WSC
DRAWN	PN	CHECKED	
APPROVED	WSC	DATE	-

CAD file: H:\Data\t_102861\102864634-AF Sheberghan Feasibility\CAD\Working\102864634-1021.dwg
Last saved: Tue, 25 Oct 2006 12:11 am

maunsell

Maunsell Limited
an AECOM company

AEAI/USAID
AEAI Delivery Order No: 801-MAU-1

SHEBERGHAN POWER PLANT

PROCESS FLOW DIAGRAM (0.18% H_2S)

Status: ISSUE

Drg No: 102864634-1120

Rev: D

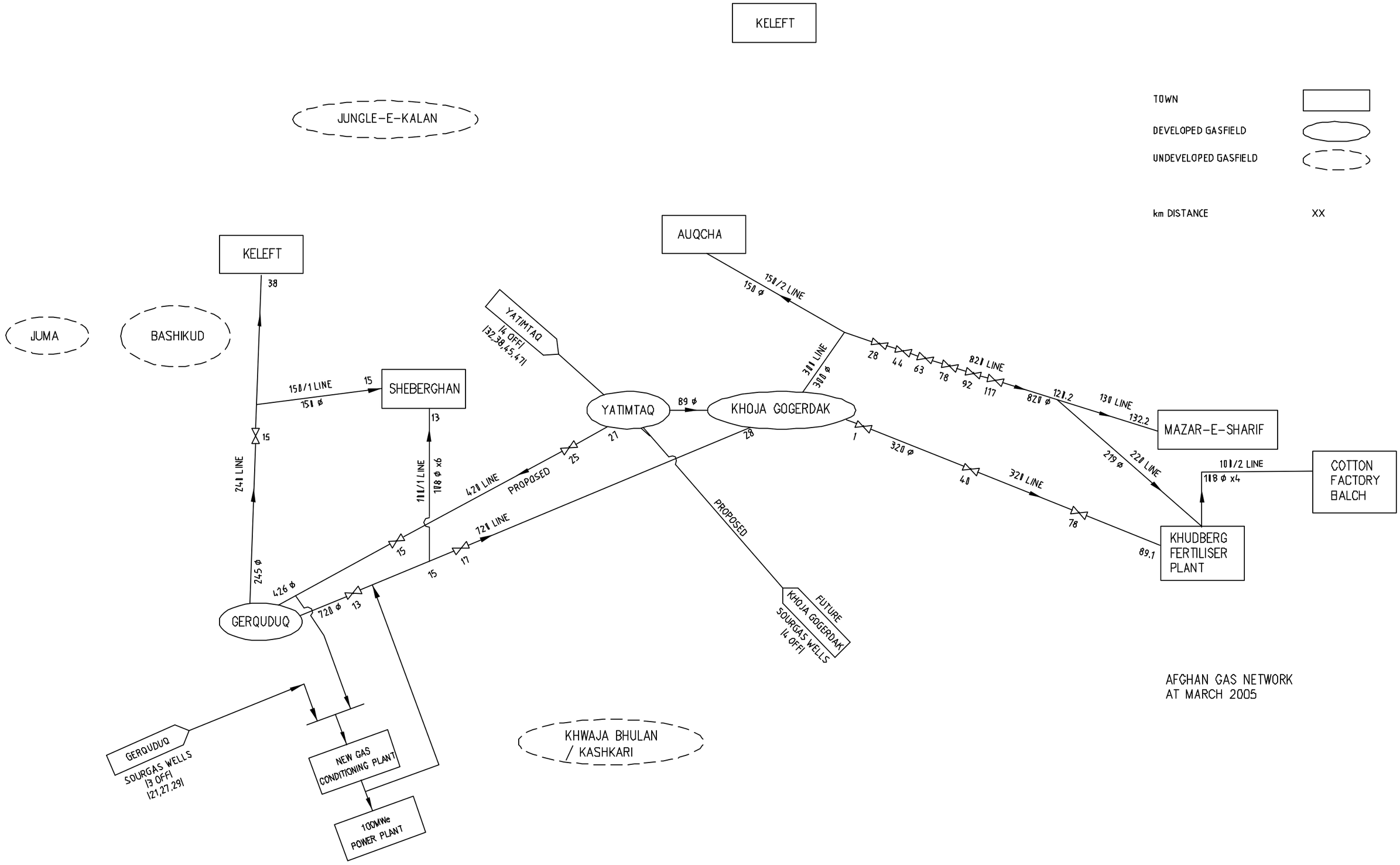

© Copyright Maunsell Limited, 2005

This drawing is confidential and shall only be used for the purposes of this project.

No.	BY	DATE	DESCRIPTION	APPD
F	ES	OCT 05	UPDATED	
E	ES	SEP 05	RE ISSUED FOR TENDER (MINOR CHANGE)	WSC
D	ES	AUG 05	RE ISSUED FOR TENDER	
C	ES	AUG 05	ISSUED FOR TENDER	WSC
B	ES	MAY 05	ISSUED FOR FINAL REPORT	WSC
A	ES	APR 05	ISSUED FOR REPORT	WSC

Scales
N.T.S.

THE SIGNING OF THIS TITLE BLOCK CONFIRMS THE DESIGN AND DRAFTING OF THIS PROJECT HAVE BEEN PREPARED AND CHECKED IN ACCORDANCE WITH THE MAUNSELL QUALITY ASSURANCE SYSTEM CERTIFIED TO AS/NZS ISO 9001-2000

DESIGNED	MP	CHECKED	WSC
DRAWN	ES	CHECKED	
APPROVED	WSC	DATE	APR 05

CAD file M:\Draft_102864634\AF Sheberghan Feasibility\CAD\Working\102864634-1121.dwg
Last saved: Tue, 25 Oct 2005 12:03 am

maunsell
Maunsell Limited
An AECOM company

AEAI/USAID
AEAI Delivery Order No: 801-MAU-1

SHEBERGHAN POWER PLANT
SYSTEM SCHEMATIC
GAS DISTRIBUTION NETWORK

Status: ISSUE
Drg No: 102864634-1121
Rev: F

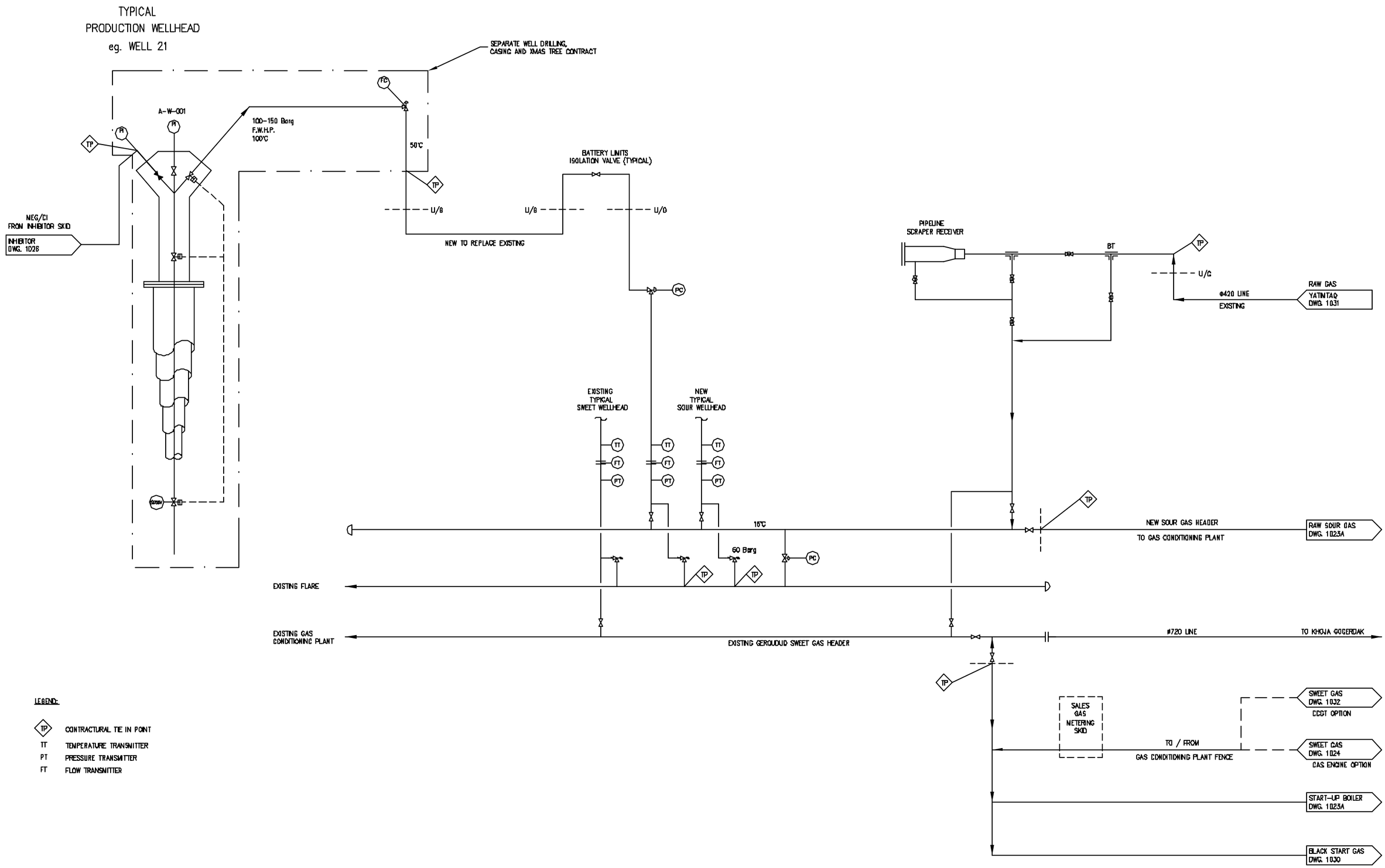

© Copyright Maunsell Limited, 2015.

This drawing is confidential and shall only be used for the purposes of this project.

No.	BY	DATE	DESCRIPTION	APPD
F	ES	OCT 15	UPDATED	
E	ES	AUG 15	RE ISSUED FOR TENDER	WSC
D	ES	AUG 15	ISSUED FOR TENDER	WSC
C	ES	MAY 15	ISSUED FOR FINAL REPORT	WSC
B	ES	MAY 15	CONDITIONED RETURN FOR YATINTAQ ADDED	WSC
A	ES	APR.15	ISSUED FOR REPORT	

Scales

N.T.S.

THE SIGNING OF THIS TITLE BLOCK CONFIRMS THE DESIGN AND DRAFTING OF THIS PROJECT HAVE BEEN PREPARED AND CHECKED IN ACCORDANCE WITH THE MAUNSELL QUALITY ASSURANCE SYSTEM CERTIFIED TO AS/NZS ISO 9001-2000

DESIGNED	NP	CHECKED	VSC
DRAWN	ES	CHECKED	
APPROVED	VSC	DATE	APR.15

CAD file: H:\Data__112864634_AF Sheberghan Feasibility\CAD\Working\112864634-1022.dwg
Last saved: Tue, 25 Oct 2006 12:14 pm

maunsell

Maunsell Limited
An AECOM company

AEAI/USAID
AEAI Delivery Order No: 801-MAU-1

SHEBERGHAN POWER PLANT

P&ID (CONCEPTUAL)
GERQUDUQ
GAS GATHERING

Status: ISSUE

Drg No: 112864634-1022

Rev: F

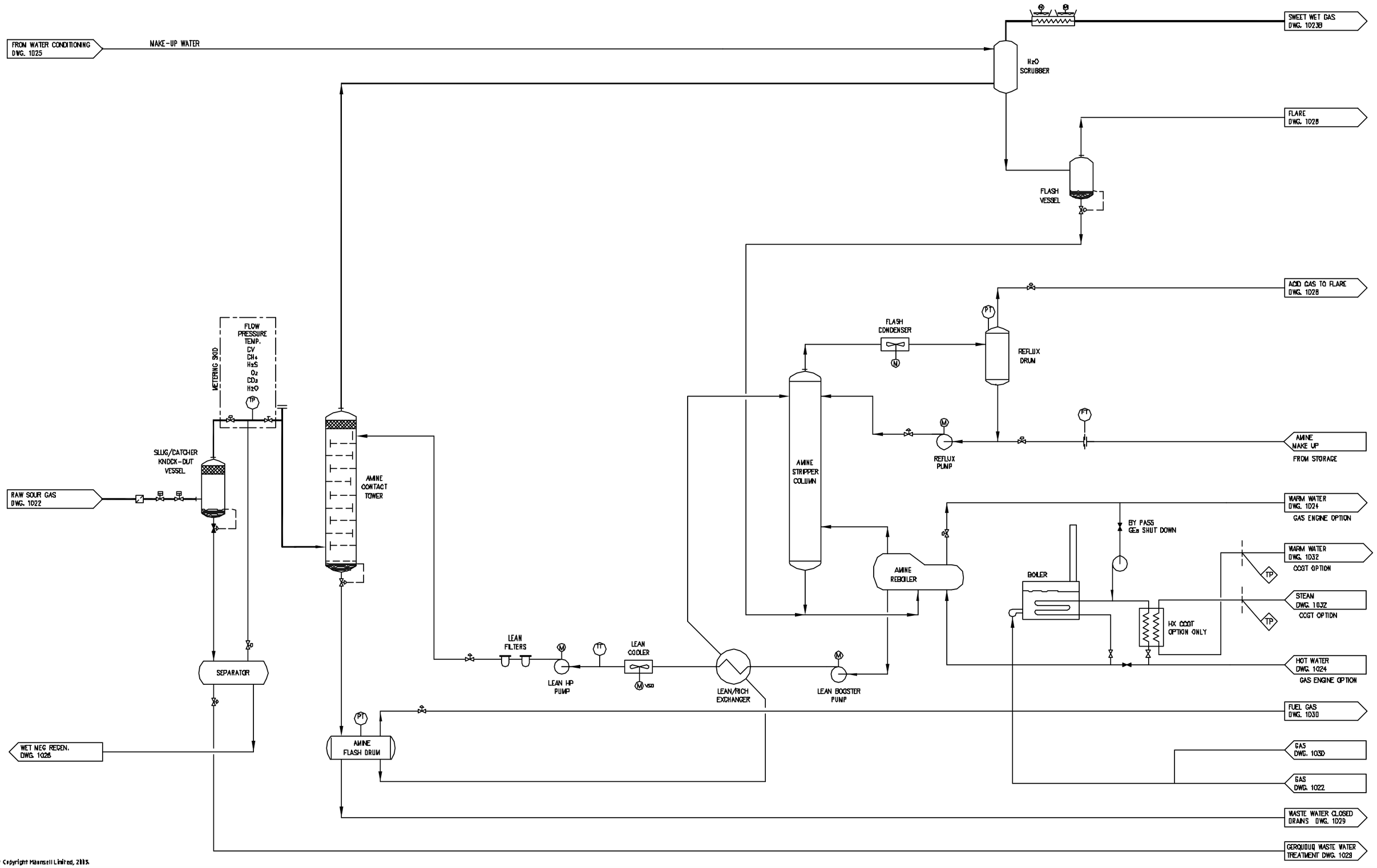

© Copyright Maunsell Limited, 2005.

This drawing is confidential and shall only be used for the purposes of this project.

No.	BY	DATE	DESCRIPTION	APPD
F	ES	SEP 15	RE ISSUED FOR TENDER (MINOR CHANGE)	WSC
E	ES	AUG 15	RE ISSUED FOR TENDER	
D	ES	AUG 15	ISSUED FOR TENDER	WSC
C	ES	MAY 15	ISSUED FOR FINAL REPORT	WSC
G	ES	OCT 15	BOILER AND HX ADDED	

Scales: N.T.S.

THE SIGNING OF THIS TITLE BLOCK CONFIRMS THE DESIGN AND DRAFTING OF THIS PROJECT HAVE BEEN PREPARED AND CHECKED IN ACCORDANCE WITH THE MAUNSELL QUALITY ASSURANCE SYSTEM CERTIFIED TO AS/NZS ISO 9001:2000

DESIGNED	NP	CHECKED	WSC
DRAWN	ES	CHECKED	
APPROVED	WSC	DATE	APR.15

CAD file: M:\Cad_102841\102864634\AF Sheberghan Feasibility\CAD\Working\102864634-1123A.dwg
Last saved: Tue, 25 Oct 2005 01:04 pm

maunsell
Maunsell Limited
An AECOM company

AEAI/USAID
AEAI Delivery Order No: 801-MAU-1

SHEBERGHAN POWER PLANT
P&ID (CONCEPTUAL)
GERQUDUQ
H2S REMOVAL

Status: ISSUE
Drg No: 102864634-1123A
Rev: G

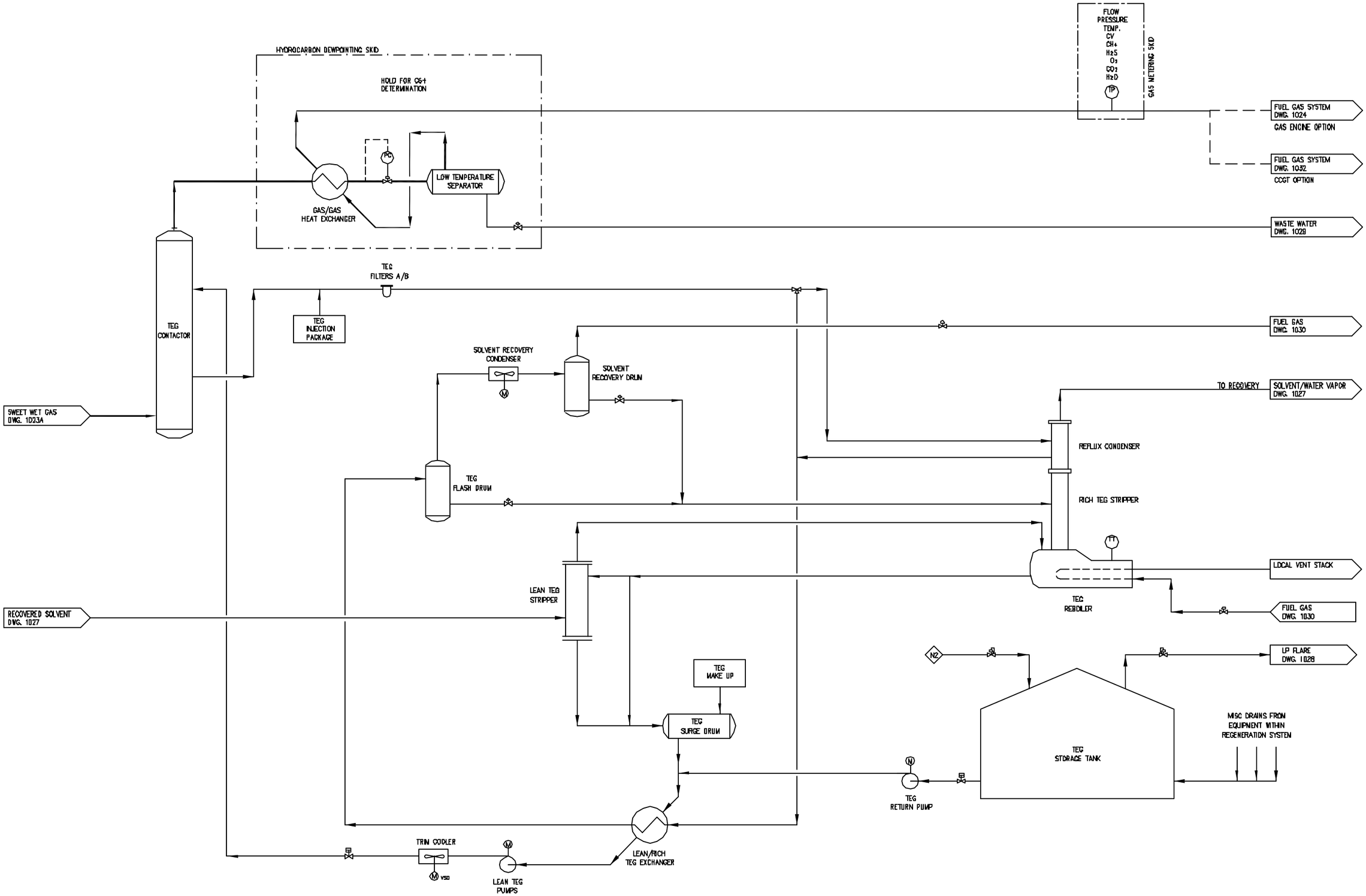

© Copyright Maunsell Limited, 2015

This drawing is confidential and shall only be used for the purposes of this project.

No.	BY	DATE	DESCRIPTION	APPD
F	ES	OCT 15	UPDATED	
E	ES	AUG 15	RE ISSUED FOR TENDER	WSC
D	ES	AUG 15	ISSUED FOR TENDER	WSC
C	ES	MAY 15	ISSUED FOR FINAL REPORT	WSC
B	ES	MAY 15	CLAUS & STEAM SYSTEM REMOVED	WSC
A	ES	APR 15	ISSUED FOR REPORT	

Scales: N.T.S.

THE SIGNING OF THIS TITLE BLOCK CONFIRMS THE DESIGN AND DRAFTING OF THIS PROJECT HAVE BEEN PREPARED AND CHECKED IN ACCORDANCE WITH THE MAUNSELL QUALITY ASSURANCE SYSTEM CERTIFIED TO AS/NZS ISO 9001-2008

DESIGNED	NP	CHECKED	WSC
DRAWN	ES	CHECKED	
APPROVED	WSC	DATE	APR 15

CAD Path: H:\Dept_1128\112864634_AF Sheberghan Feasibility\CAD\Working\112864634-1023B.dwg
Last saved: Tue, 25 Oct 2006 01:01 pm

maunsell
Maunsell Limited
An AECOM COMPANY

AEAI/USAID
AEAI Delivery Order No: 801-MAU-1

SHEBERGHAN POWER PLANT
P&ID (CONCEPTUAL)
GERQUDUQ
DEHYDRATION

Status: ISSUE
Drg No: 112864634-1023B
Rev: F

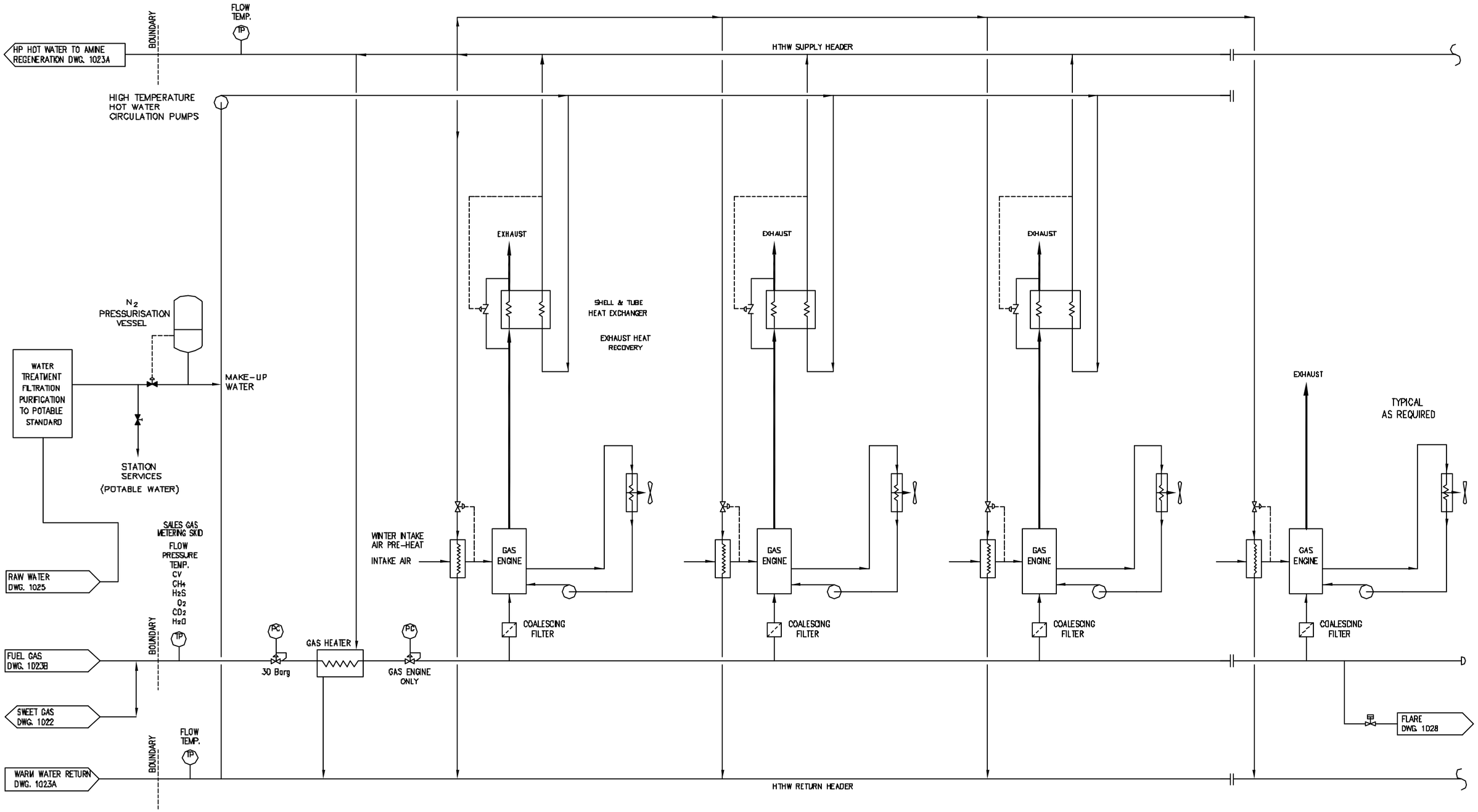

NOTES:

1. OPTION FOR CCGT NOT SHOWN – SEE DWG 1032

© Copyright Maunsell Limited, 2005.

This drawing is confidential and shall only be used for the purposes of this project.

No.	BY	DATE	DESCRIPTION	APPD
F	ES	OCT 15	UPDATED	
E	ES	AUG 15	RE ISSUED FOR TENDER	WSC
D	ES	AUG 15	ISSUED FOR TENDER	WSC
C	ES	MAY 15	ISSUED FOR FINAL REPORT	WSC
B	ES	MAY 15	STEAM SYSTEM REMOVED	WSC
A	ES	APR 15	ISSUED FOR REPORT	

Scales: N.T.S.

THE SIGNING OF THIS TITLE BLOCK CONFIRMS THE DESIGN AND DRAFTING OF THIS PROJECT HAVE BEEN PREPARED AND CHECKED IN ACCORDANCE WITH THE MAUNSELL QUALITY ASSURANCE SYSTEM CERTIFIED TO AS/NZS ISO 9001:2000

DESIGNED	NP	CHECKED	WSC
DRAWN	ES	CHECKED	
APPROVED	WSC	DATE	APR 15

CAD Path: N:\Data__1124\112864634-A7 Sheberghan Feasibility\CAD\Working\112864634-1024.dwg
Last saved: Tue, 25 Oct 2005 10:55 am

maunsell
Maunsell Limited
An AECOM COMPANY

AEAI/USAID
AEAI Delivery Order No: 801-MAU-1

SHEBERGHAN POWER PLANT

P&ID (CONCEPTUAL)
POWER PLANT

Status: ISSUE

Drg No: 112864634-1024

Rev: F

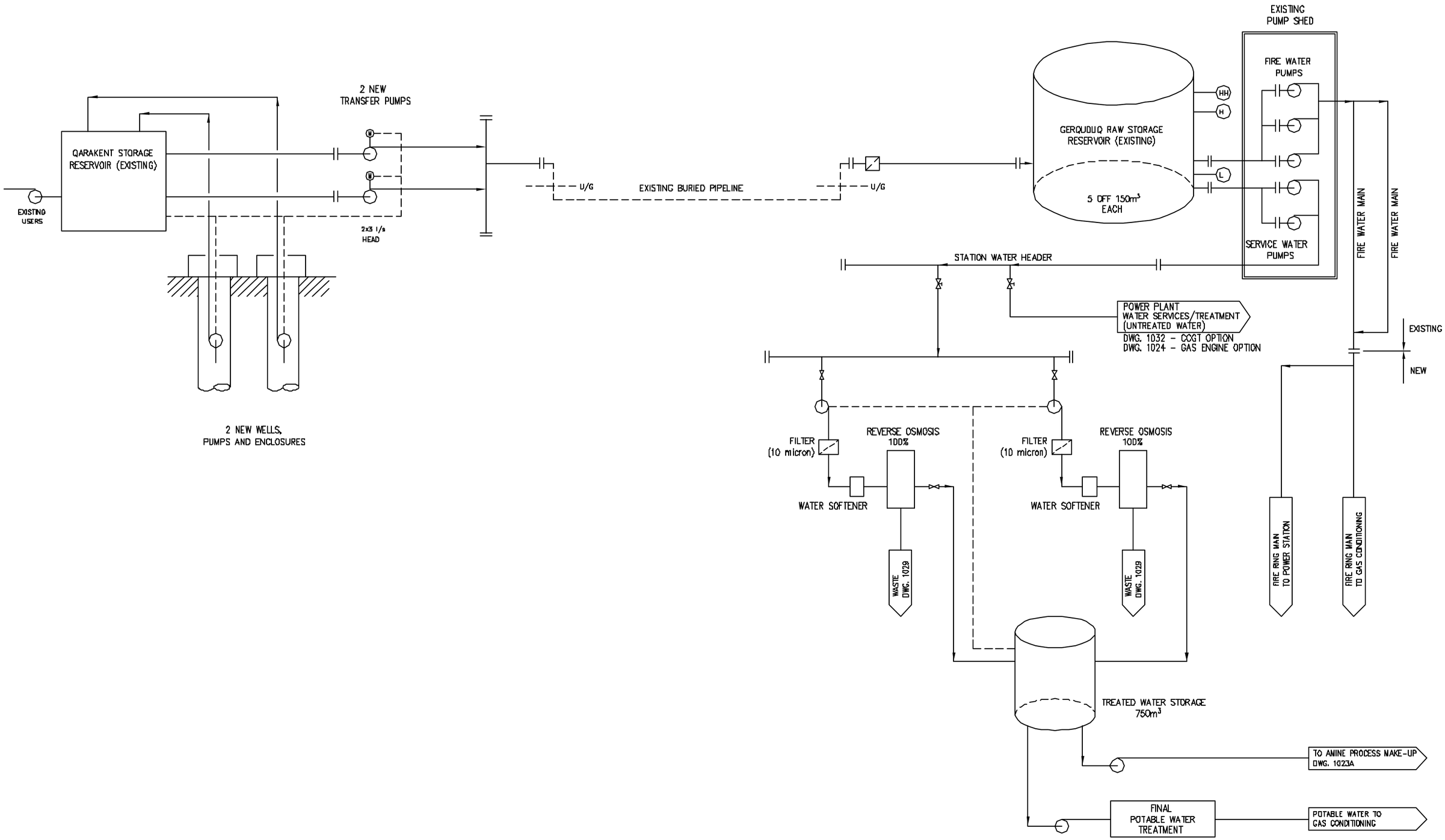

© Copyright Maunsell Limited, 2005.

This drawing is confidential and shall only be used for the purposes of this project.

No.	BY	DATE	DESCRIPTION	APPD
F	ES	SEP 15	RE ISSUED FOR TENDER (MINOR CHANGE)	WSC
E	ES	AUG 15	RE ISSUED FOR TENDER	
D	ES	AUG 15	ISSUED FOR TENDER	WSC
C	ES	MAY 15	ISSUED FOR FINAL REPORT	WSC
B	ES	MAY 15	WASTE WATER ADDED	WSC
A	ES	APR.15	ISSUED FOR REPORT	

Scales

N.T.S.

THE SIGNING OF THIS TITLE BLOCK CONFIRMS THE DESIGN AND DRAFTING OF THIS PROJECT HAVE BEEN PREPARED AND CHECKED IN ACCORDANCE WITH THE MAUNSELL QUALITY ASSURANCE SYSTEM CERTIFIED TO AS/NZS ISO 9001-2000

DESIGNED	M.P.	CHECKED	V.S.C.
DRAWN	E.S.	CHECKED	
APPROVED	V.S.C.	DATE	APR.15

CAD file: H:\Data_112M112864634\AF Sheberghan Feasibility\CAD\Working\112864634-1125.dwg
Last saved: Tue, 25 Oct 2005 01:01 pm

maunsell

Maunsell Limited
An AECOM COMPANY

AEAI/USAID
AEAI Delivery Order No: 801-MAU-1

SHEBERGHAN POWER PLANT

P&ID (CONCEPTUAL)
WATER SUPPLY

Status	Drg No	Rev
ISSUE	112864634-1125	G

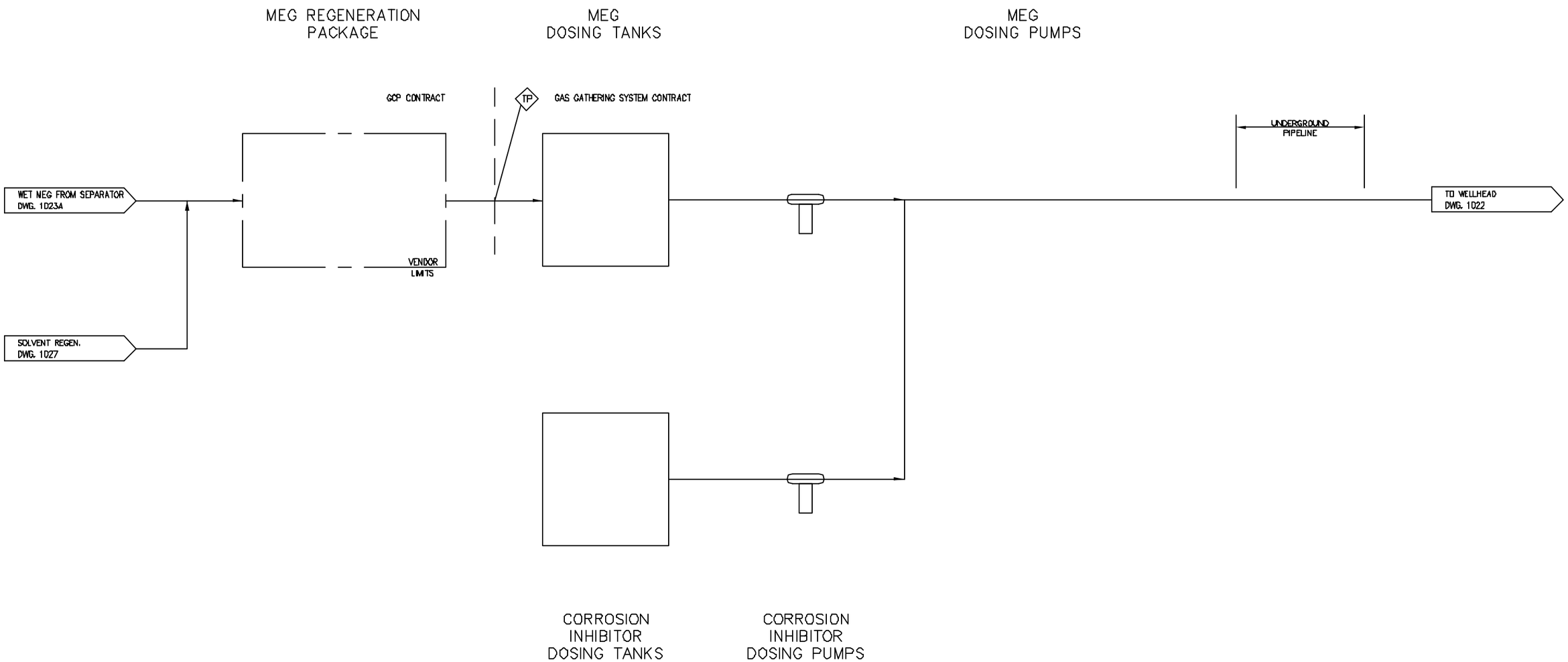

© Copyright Maunsell Limited, 2005.

This drawing is confidential and shall only be used for the purposes of this project.

No.	BY	DATE	DESCRIPTION	APPD
B	ES	OCT 05	UPDATED	
A	ES	AUG.05	ISSUED FOR TENDER	WSC

Scales: N.T.S.

THE SIGNING OF THIS TITLE BLOCK CONFIRMS THE DESIGN AND DRAFTING OF THIS PROJECT HAVE BEEN PREPARED AND CHECKED IN ACCORDANCE WITH THE MAUNSELL QUALITY ASSURANCE SYSTEM CERTIFIED TO AS/NZS ISO 9111-2000

DESIGNED	M.P.	CHECKED	W.S.C.
DRAWN	E.S.	CHECKED	
APPROVED	W.S.C.	DATE	JUL.05

CAD file: M:\Cad_102864634-AF Sheberghan Feasibility\CAD\Working\102864634-1026.dwg
Last saved: Tue, 25 Oct 2005 01:01 pm

maunsell
Maunsell Limited
AH AECOM COMPANY

AEAI/USAID
AEAI Delivery Order No: 801-MAU-1

SHEBERGHAN POWER PLANT
P&ID (CONCEPTUAL)
GERQUDUQ
CHEMICAL DOSING

Status: ISSUE
Drg No: 102864634-1026
Rev: B

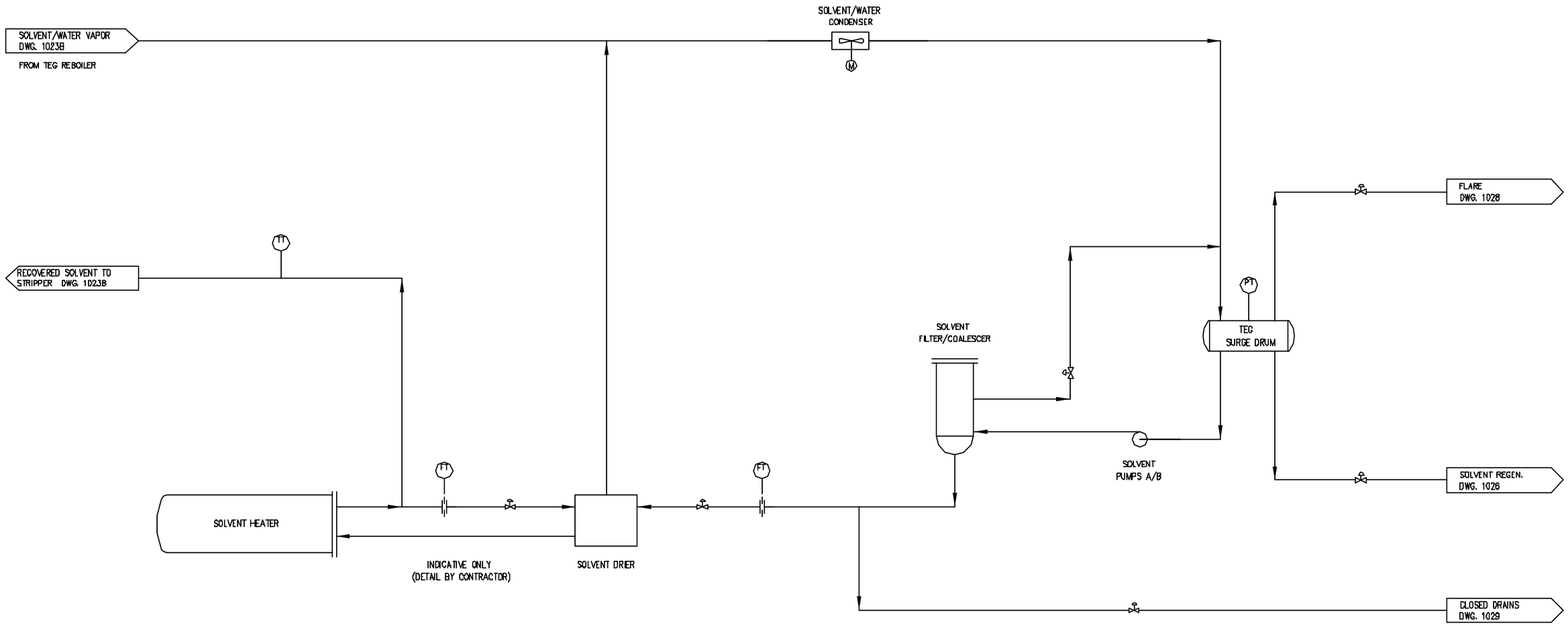

© Copyright Maunsell Limited, 2005

This drawing is confidential and shall only be used for the purposes of this project.

No.	BY	DATE	DESCRIPTION	APPD
B	ES	OCT 05	UPDATED	
A	ES	AUG.05	ISSUED FOR TENDER	WSC

Scales

N.T.S.

THE SIGNING OF THIS TITLE BLOCK CONFIRMS THE DESIGN AND DRAFTING OF THIS PROJECT HAVE BEEN PREPARED AND CHECKED IN ACCORDANCE WITH THE MAUNSELL QUALITY ASSURANCE SYSTEM CERTIFIED TO AS/NZS ISO 9001-2000

DESIGNED	M.P.	CHECKED	W.S.C.
DRAWN	E.S.	CHECKED	
APPROVED	W.S.C.	DATE	JUL.05

CAD File: H:\Data_112861112864684-AP Sheberghan Feasibility\CAD\Working\112864634-1027.dwg
Last saved: Tue, 25 Oct 2005 01:02 pm

maunsell

Maunsell Limited
An AECOM COMPANY

AEAI/USAID
AEAI Delivery Order No: 801-MAU-1

SHEBERGHAN POWER PLANT

P&ID (CONCEPTUAL)
GERQUDUQ
TEG SOLVENT RECOVERY

Status: ISSUE

Drg No: 112864634-1027

Rev: B

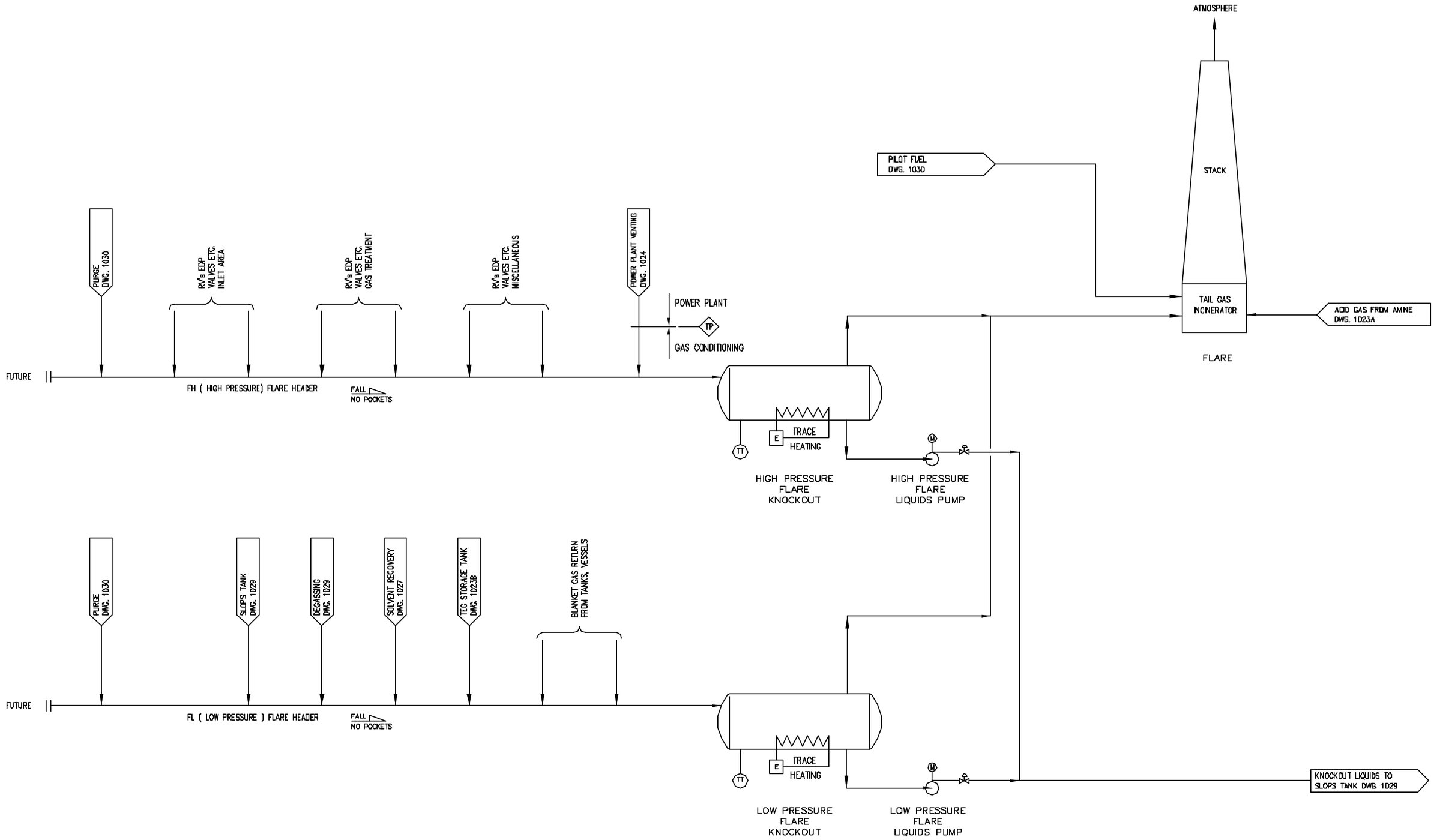

© Copyright Maunsell Limited, 2005

This drawing is confidential and shall only be used for the purposes of this project.

No.	BY	DATE	DESCRIPTION	APPD
C	ES	OCT 05	UPDATED	
B	ES	AUG 05	RE ISSUED FOR TENDER	WSC
A	ES	AUG 05	ISSUED FOR TENDER	WSC

Scales

N.T.S.

THE SIGNING OF THIS TITLE BLOCK CONFIRMS THE DESIGN AND DRAFTING OF THIS PROJECT HAVE BEEN PREPARED AND CHECKED IN ACCORDANCE WITH THE MAUNSELL QUALITY ASSURANCE SYSTEM CERTIFIED TO AS/NZS ISO 9001-2000

DESIGNED	M.P.	CHECKED	V.S.C.
DRAWN	E.S.	CHECKED	
APPROVED	V.S.C.	DATE	JUL.05

CAD file: M:\Data_1128\112B64634-AF Sheberghan Power Plant\CAD\Working\112B64634-1128.dwg
Last saved: Tue, 25 Oct 2005 01:58 pm

maunsell

Maunsell Limited
An AECOM company

AEAI/USAID
AEAI Delivery Order No: 801-MAU-1

SHEBERGHAN POWER PLANT

P&ID (CONCEPTUAL)
GERQUDUQ
FLARE SYSTEM

Status: ISSUE

Drg No: 112B64634-1128

Rev: C

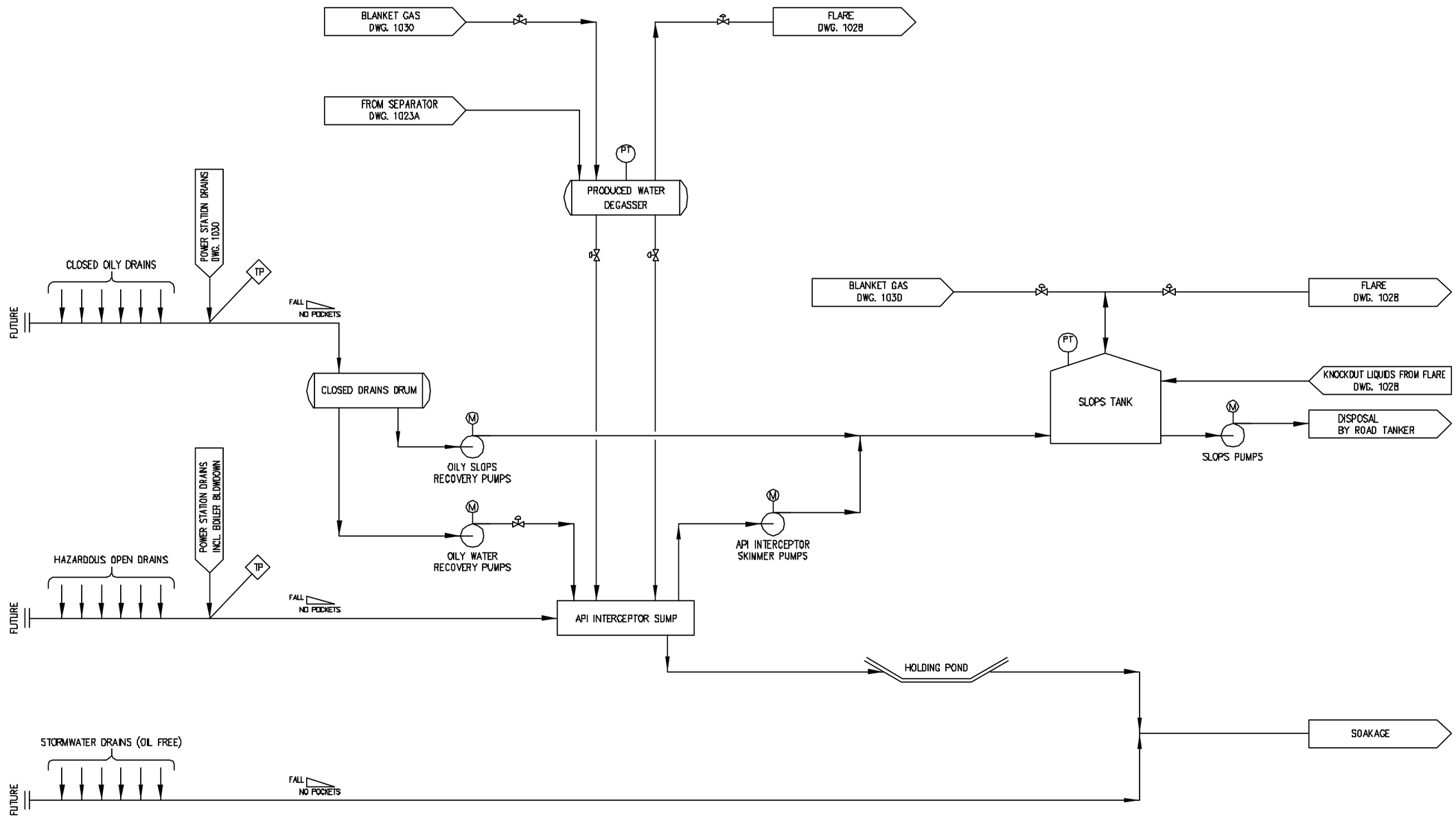

© Copyright Maunsell Limited, 2005.

This drawing is confidential and shall only be used for the purposes of this project.

No.	BY	DATE	DESCRIPTION	APPD
C	ES	OCT 05	UPDATED	
B	ES	AUG 05	RE ISSUED FOR TENDER	WSC
A	PM	AUG 05	ISSUED FOR TENDER	WSC

Scales

N.T.S.

THE SIGNING OF THIS TITLE BLOCK CONFIRMS THE DESIGN AND DRAFTING OF THIS PROJECT HAVE BEEN PREPARED AND CHECKED IN ACCORDANCE WITH THE MAUNSELL QUALITY ASSURANCE SYSTEM CERTIFIED TO AS/NZS ISO 9001:2000

DESIGNED	WSC	CHECKED	-
DRAWN	PM	CHECKED	
APPROVED	-	DATE	JUL.05

CAD file: H:\Data__112864634_AF Sheberghan Feasibility\CAD\Working\112864634-1029.dwg
Last saved: Tue, 25 Oct 2005 01:57 pm

maunsell

Maunsell Limited
an AECOM company

AEAI/USAID
AEAI Delivery Order No: 801-MAU-1

SHEBERGHAN POWER PLANT

P&ID (CONCEPTUAL)
GERQUDUQ
WASTEWATER TREATMENT

Status: ISSUE

Drg No: 112864634-1029

Rev: C

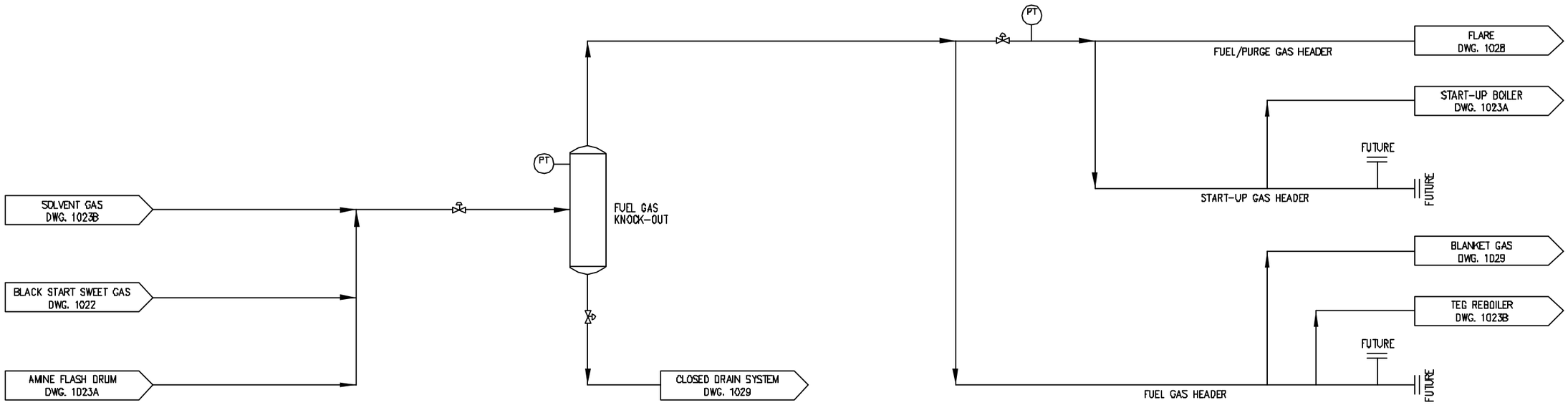

© Copyright Maunsell Limited, 2005.

This drawing is confidential and shall only be used for the purposes of this project.

No.	BY	DATE	DESCRIPTION	APPD
B	ES	OCT 05	UPDATED	
A	PM	AUG. 05	ISSUED FOR TENDER	WSC

Scales

N.T.S.

THE SIGNING OF THIS TITLE BLOCK CONFIRMS THE DESIGN AND DRAFTING OF THIS PROJECT HAVE BEEN PREPARED AND CHECKED IN ACCORDANCE WITH THE MAUNSELL QUALITY ASSURANCE SYSTEM CERTIFIED TO AS/NZS ISO 9001-2000

DESIGNED	WSC	CHECKED	-
DRAWN	PM	CHECKED	
APPROVED	WSC	DATE	-

CAD Path: H:\Data__112864634-AF Sheberghan Feasibility\CAD\Working\112864634-1030.dwg
Last saved: Tue, 25 Oct 2005 01:57 pm

maunsell

Maunsell Limited
An AECOM company

AEAI/USAID
AEAI Delivery Order No: 801-MAU-1

SHEBERGHAN POWER PLANT

P&ID (CONCEPTUAL)
GERQUDUQ
FUEL GAS SYSTEM

Status: ISSUE

Drg No: 112864634-1030

Rev: B

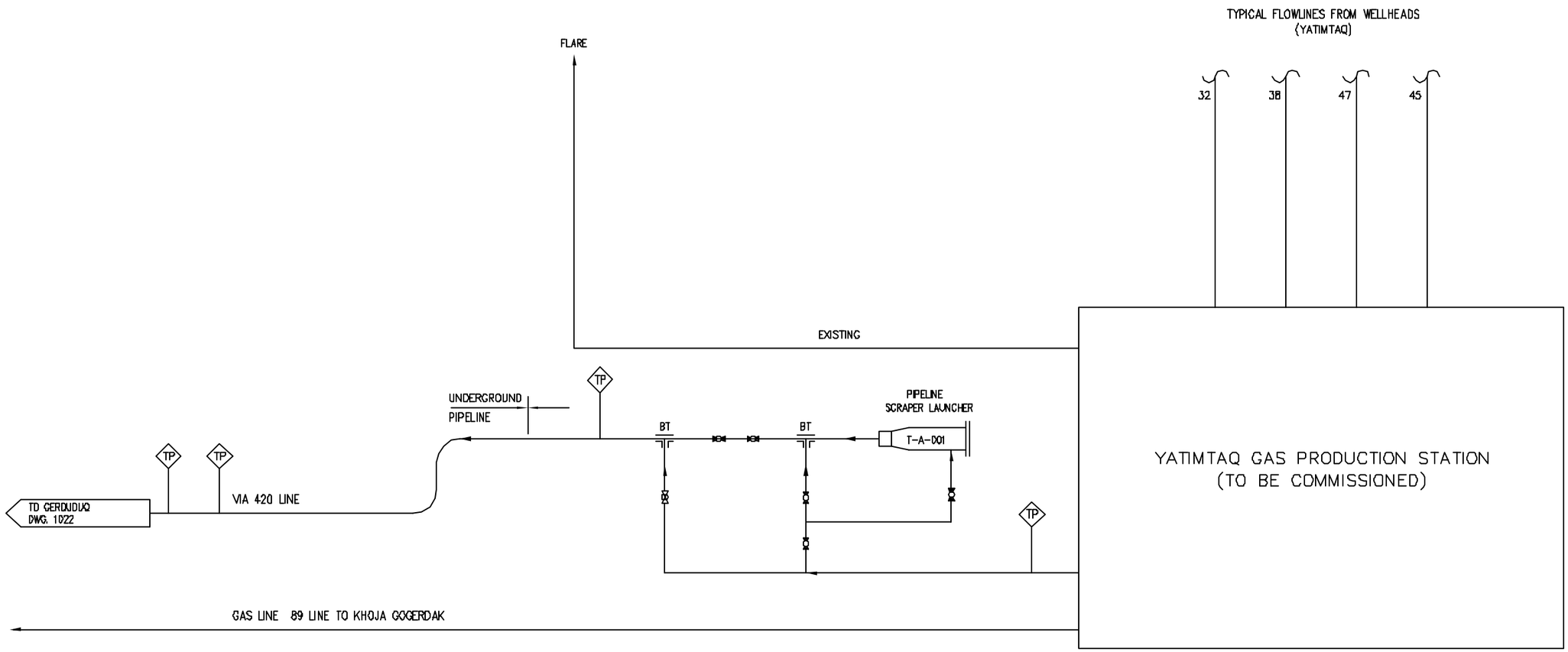

© Copyright Maunsell Limited, 2005

This drawing is confidential and shall only be used for the purposes of this project.

No.	BY	DATE	DESCRIPTION	APPD
C	ES	OCT 05	UPDATED	
B	ES	AUG 05	RE ISSUED FOR TENDER	WSC
A	ES	AUG 05	ISSUED FOR TENDER	WSC

Scales

N.T.S.

THE SIGNING OF THIS TITLE BLOCK CONFIRMS THE DESIGN AND DRAFTING OF THIS PROJECT HAVE BEEN PREPARED AND CHECKED IN ACCORDANCE WITH THE MAUNSELL QUALITY ASSURANCE SYSTEM CERTIFIED TO AS/NZS ISO 9001-2000

DESIGNED	M.P.	CHECKED	V.S.C.
DRAWN	E.S.	CHECKED	
APPROVED	V.S.C.	DATE	JUL.05

CAD file: H:\Data_102864634\AF Sheberghan Feasibility\CAD\Working\102864634-1131.dwg
Last saved: Tue, 25 Oct 2005 01:58 pm

maunsell

Maunsell Limited
An AECOM company

AEAI/USAID
AEAI Delivery Order No: 801-MAU-1

SHEBERGHAN POWER PLANT

P&ID (CONCEPTUAL)
YATIMTAQ
GAS PRODUCTION STATION

Status: ISSUE

Drg No: 102864634-1131

Rev: C

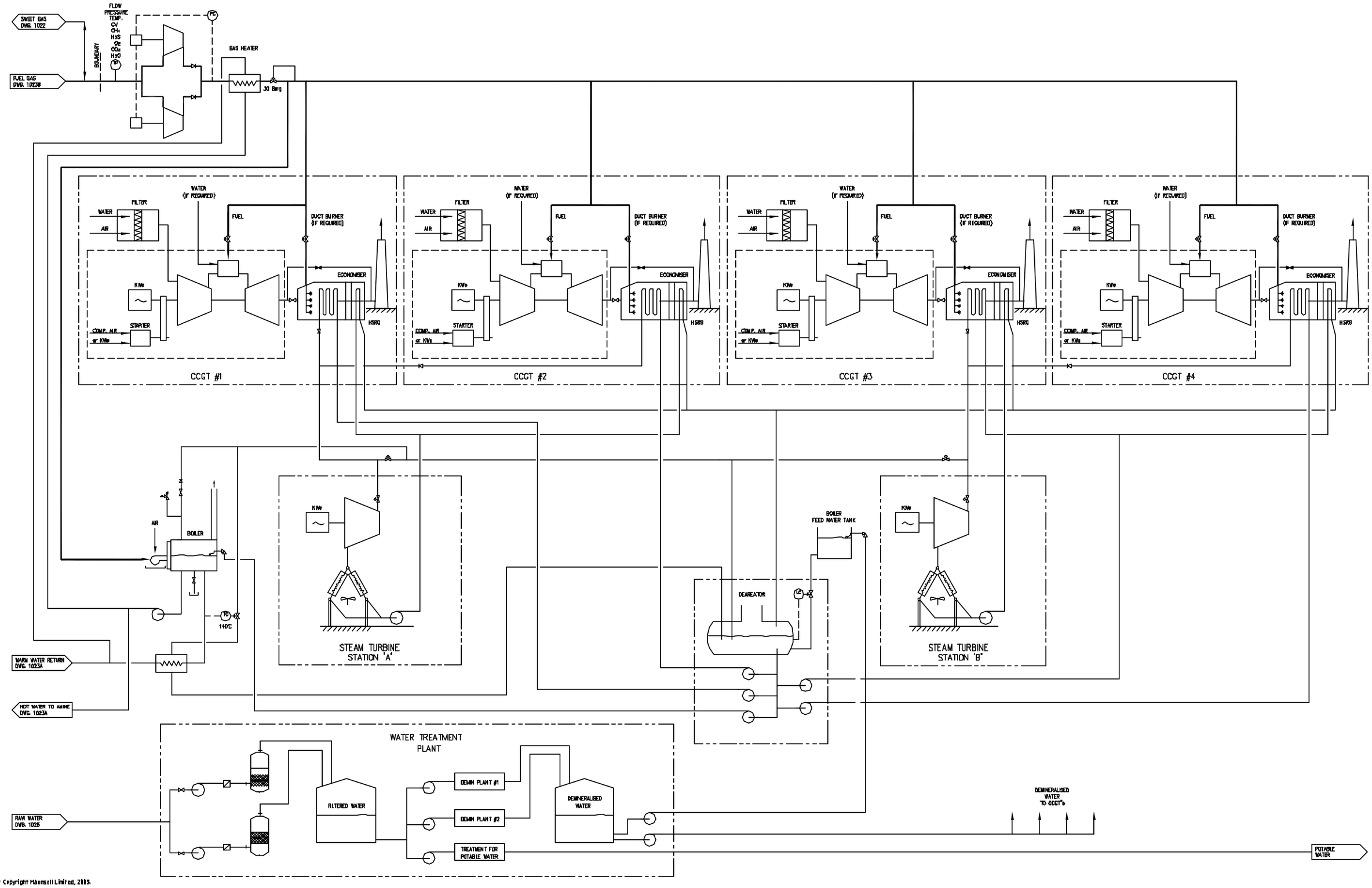

© Copyright Maunsell Limited, 2005

This drawing is confidential and shall only be used for the purposes of this project.

No.	BY	DATE	DESCRIPTION	APPD
C	ES	OCT 05	UPDATED	
B	ES	SEP.05	RE ISSUED FOR TENDER	WSC
A	ES	AUG.05	ISSUED FOR	

Scales

N.T.S.

THE SIGNING OF THIS TITLE BLOCK CONFIRMS THE DESIGN AND DRAFTING OF THIS PROJECT HAVE BEEN PREPARED AND CHECKED IN ACCORDANCE WITH THE MAUNSELL QUALITY ASSURANCE SYSTEM CERTIFIED TO AS/NZS ISO 9001-2000

DESIGNED	WBN	CHECKED	WSC
DRAWN	ES	CHECKED	
APPROVED	WSC	DATE	AUG 05

CAD file: M:\Dwgs_1128\1128646634-A7 Sheberghan Feasibility\CAD\Working\1128646634-1132.dwg
Last saved: Tue, 25 Oct 2006 11:10 am

maunsell

Maunsell Limited
AH AECOM COMPANY

AEAI/USAID
AEAI Delivery Order No: 801-MAU-1

SHEBERGHAN POWER PLANT

P&ID (CONCEPTUAL)
COMBINED CYCLE GAS TURBINE
POWER PLANT

Status: ISSUE

Drg No: 1128646634-1132

Rev: C

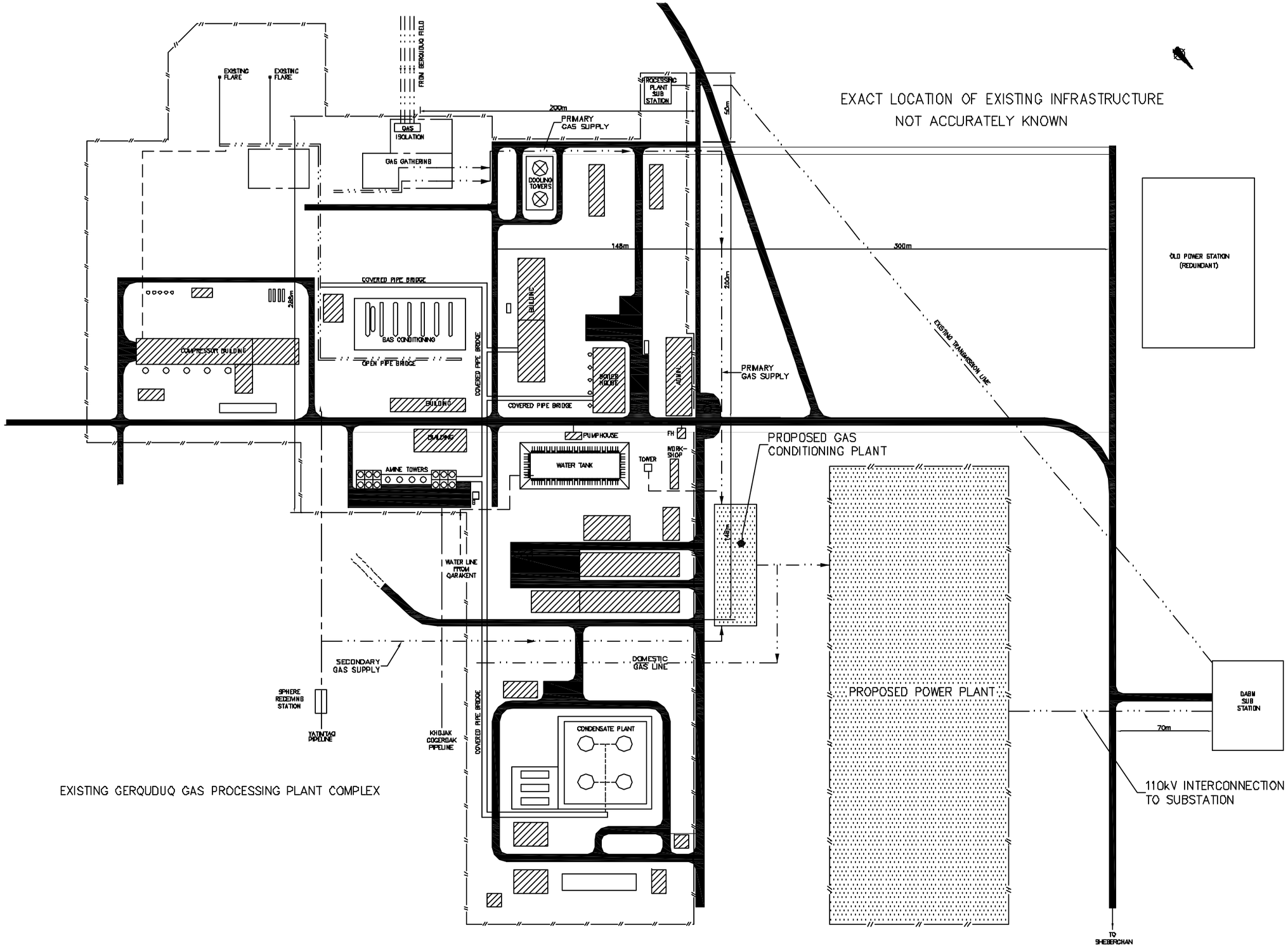

1:2000

© Copyright Maunsell Limited, 2005.

This drawing is confidential and shall only be used for the purposes of this project.

No.	BY	DATE	DESCRIPTION	APPD
F	ES	OCT 15	UPDATED	
E	ES	SEP 15	RE ISSUED FOR TENDER	WSC
D	PM	AUG.15	TENDER INFORMATION	WSC
C	ES	MAY 15	ISSUED FOR FINAL REPORT	
B	ES	MAY 15	GAS TREATMENT PLANT RELOCATED	WSC
A	ES	APR.15	ISSUED FOR REPORT	

Scales

Drawing not to scale.

Dim's shown are site measured

THE SIGNING OF THIS TITLE BLOCK CONFIRMS THE DESIGN AND DRAFTING OF THIS PROJECT HAVE BEEN PREPARED AND CHECKED IN ACCORDANCE WITH THE MAUNSELL QUALITY ASSURANCE SYSTEM CERTIFIED TO AS/NZS ISO 9001-2000

DESIGNED	M.P.	CHECKED	W.S.C.
DRAWN	E.S.	CHECKED	CDT
APPROVED	W.S.C.	DATE	APR.15

CAD Path: H:\Data_112864634 AF Sheberghan Power Plant\Utility\CAD\Working\112864634-1414.dwg
Last saved: Tue, 26 Oct 2005 11:11 am

maunsell

Maunsell Limited
AN AECOM COMPANY

AEAI
AEAI Delivery Order No: 801-MAU-1

SHEBERGHAN POWER PLANT

SITE LAYOUT - GENERAL

Status	Drg No.	Rev.
ISSUE	112864634-1414	F

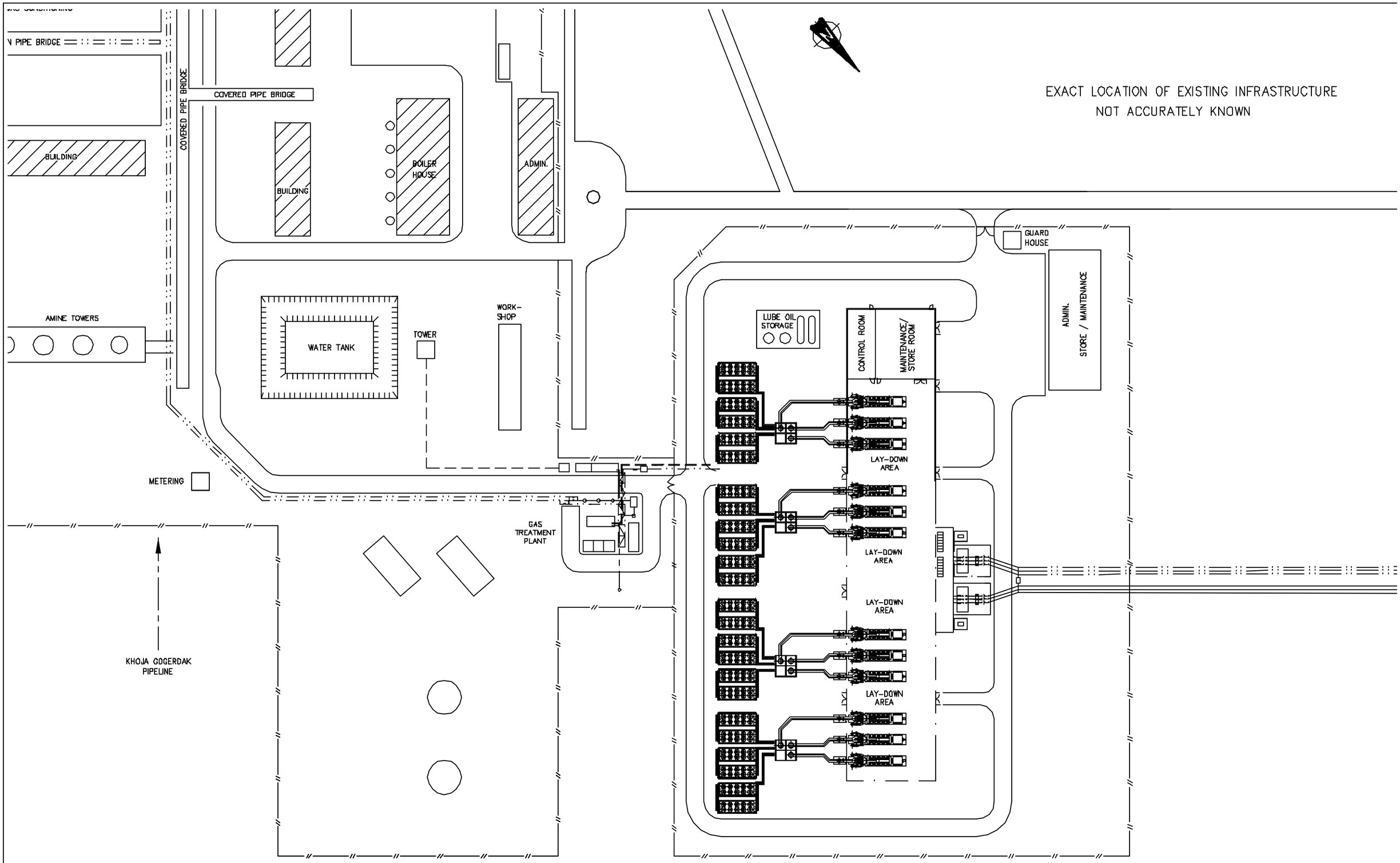

© Copyright Maunsell Limited, 2015.

This drawing is confidential and shall only be used for the purposes of this project.

No.	BY	DATE	DESCRIPTION	APPD
E	ES	OCT 15	UPDATED	
D	ES	SEP 15	RE ISSUED FOR TENDER	WSC
C	ES	MAY 15	ISSUED FOR FINAL REPORT	
B	ES	MAY 15	GAS TREATMENT PLANT RELOCATED	WSC
A	ES	APR.15	ISSUED FOR REPORT	

Scales

1:500

1:1000

THE SIGNING OF THIS TITLE BLOCK CONFIRMS THE DESIGN AND DRAFTING OF THIS PROJECT HAVE BEEN PREPARED AND CHECKED IN ACCORDANCE WITH THE MAUNSELL QUALITY ASSURANCE SYSTEM CERTIFIED TO AS/NZS ISO 9001:2008

DESIGNED	M.P.	CHECKED	V.S.C.
DRAWN	E.S.	CHECKED	
APPROVED	W.S.C.	DATE	APR.15

CAD Path: H:\Data_112811\112864634 AF Sheberghan Feasibility\CAD\Working\112864634-1415.dwg
Last saved: Tue, 25 Oct 2005 11:12 am

maunsell

Maunsell Limited
An AECOM COMPANY

AEAI/USAID
AEAI Delivery Order No: 801-MAU-1

SHEBERGHAN POWER PLANT

PLANT, EQUIPMENT AND BASIC PIPING LAYOUT
POWER PLANT |GAS ENGINE OPTION|
OPTION 1 | NEW BUILDING |

Status: ISSUE

Drg No: 112864634-1415

Rev: E

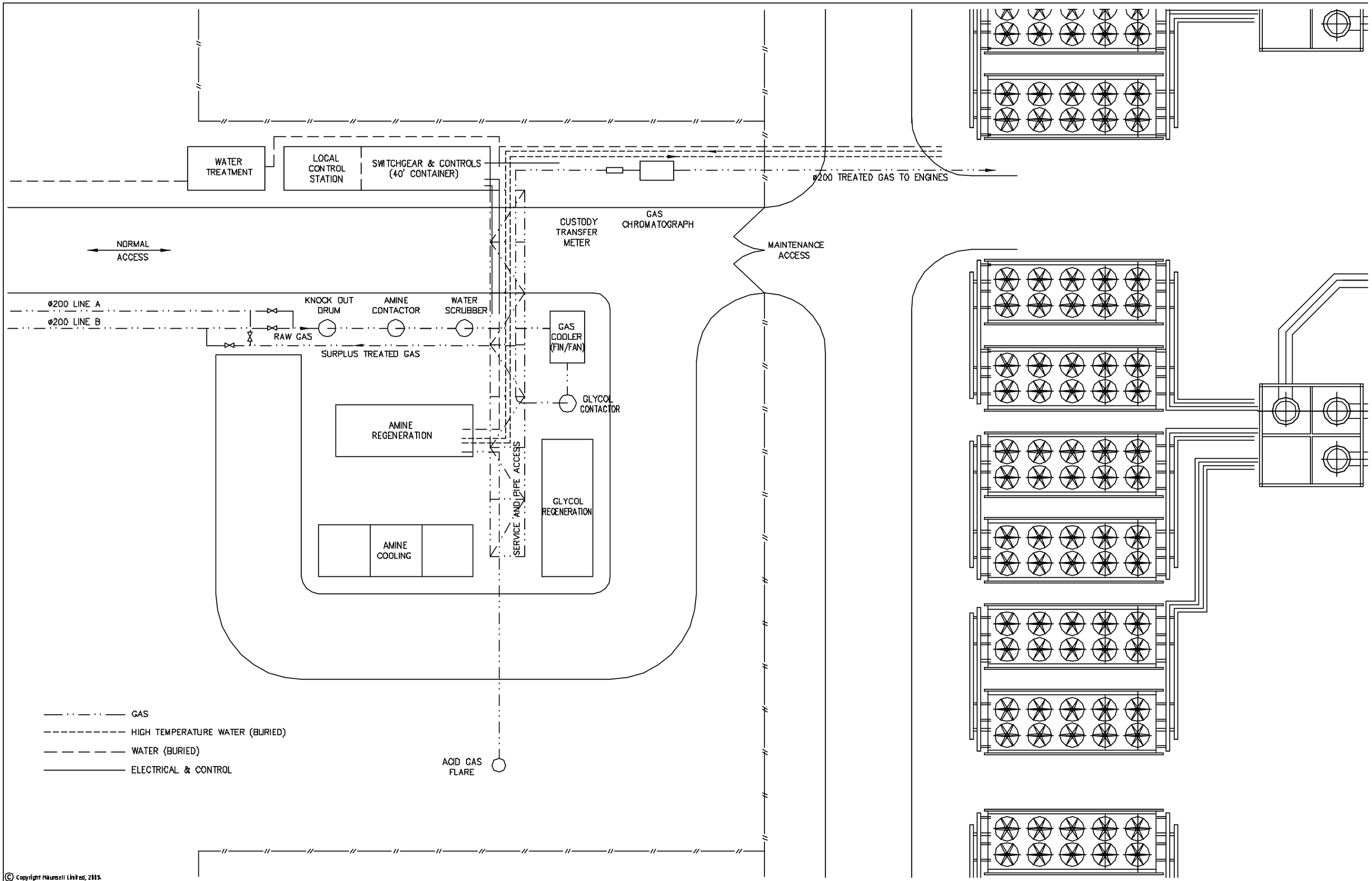

© Copyright Maunsell Limited, 2005

This drawing is confidential and shall only be used for the purposes of this project.

No.	BY	DATE	DESCRIPTION	APPD
D	ES	OCT 15	UPDATED	
C	ES	SEP 15	RE ISSUED FOR TENDER (MINOR CHANGE)	WSC
B	ES	MAY 15	ISSUED FOR FINAL REPORT	WSC
A	ES	APR 15	ISSUED FOR REPORT	WSC

Scales

1:100

1:200

THE SIGNING OF THIS TITLE BLOCK CONFIRMS THE DESIGN AND DRAFTING OF THIS PROJECT HAVE BEEN PREPARED AND CHECKED IN ACCORDANCE WITH THE MAUNSELL QUALITY ASSURANCE SYSTEM CERTIFIED TO AS/NZS ISO 9001-2000

DESIGNED	M.P.	CHECKED	W.S.C.
DRAWN	E.S.	CHECKED	
APPROVED	W.S.C.	DATE	APR 15

CAD Path: M:\Dept_1124\112864634 AF Sheberghan Feasibility\CAD\Working\112864634-1416.dwg
Last saved: Tue, 25 Oct 2005 11:13 am

maunsell

Maunsell Limited
AN AECOM COMPANY

AEAI/USAID
AEAI Delivery Order No: 801-MAU-1

SHEBERGHAN POWER PLANT

PLANT, EQUIPMENT AND BASIC PIPING LAYOUT
GAS TREATMENT PLANT
OPTION 1 | NEW POWER PLANT BUILDING |

Status	Drg No.	Rev.
ISSUE	112864634-1416	D

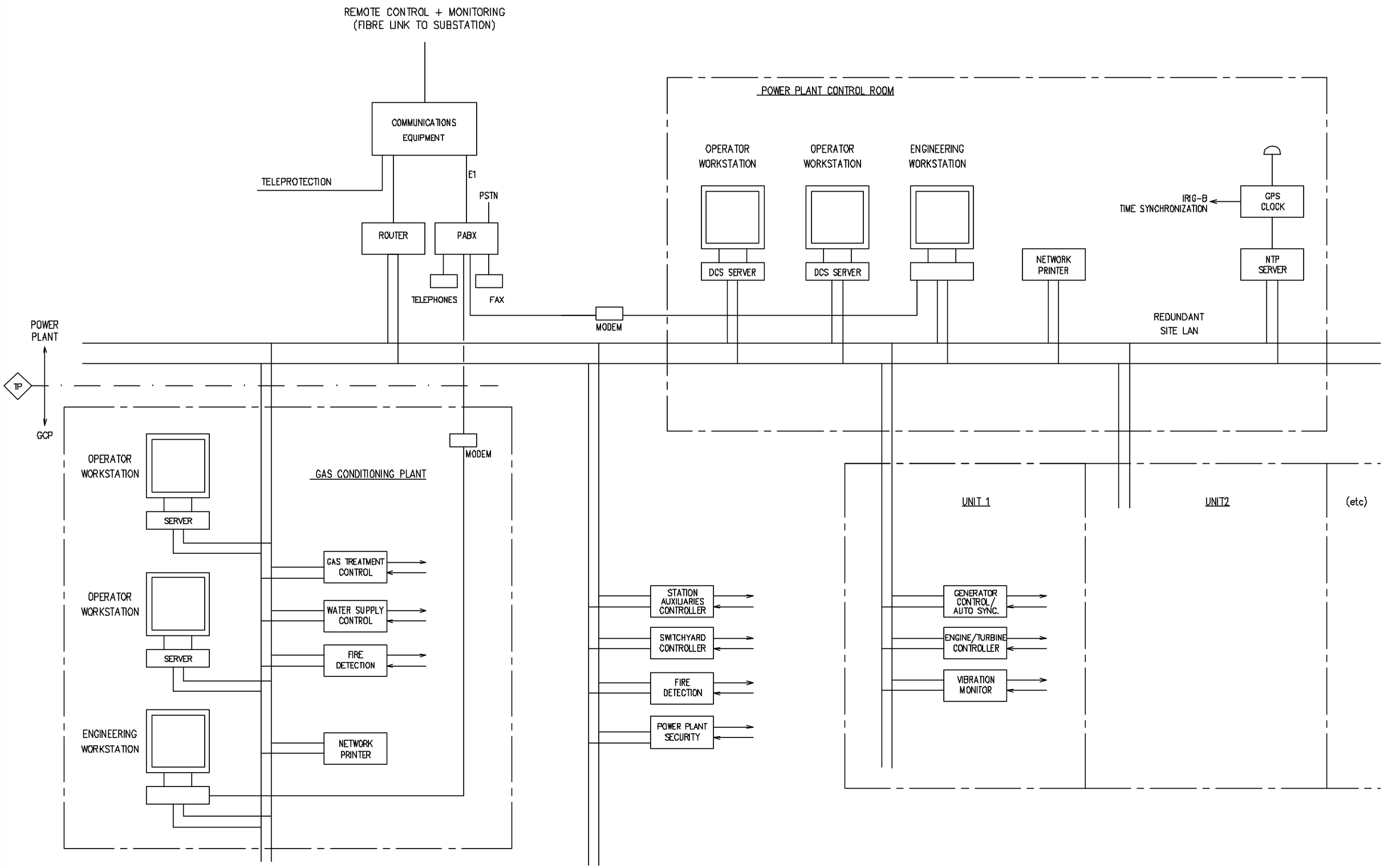

© Copyright Maunsell Limited, 2003.

This drawing is confidential and shall only be used for the purposes of this project.

No.	BY	DATE	DESCRIPTION	APPD
F	ES	OCT 15	UUPDATED	
E	ES	SEP 15	RE ISSUED FOR TENDER	DJP
D	PM	AUG 15	ISSUED FOR TENDER	
C	ES	MAY 15	ISSUED FOR FINAL REPORT	
B	ES	MAY 15	GAS TREATMENT PLANT ADDED	WSC
A	FE	APR 15	ISSUED FOR REPORT	

Scales

N.T.S.

THE SIGNING OF THIS TITLE BLOCK CONFIRMS THE DESIGN AND DRAFTING OF THIS PROJECT HAVE BEEN PREPARED AND CHECKED IN ACCORDANCE WITH THE MAUNSELL QUALITY ASSURANCE SYSTEM CERTIFIED TO AS/NZS ISO 9001-2000

DESIGNED	CST	CHECKED	DJP
DRAWN	FA	CHECKED	
APPROVED	WSC	DATE	APR 15

CAD Path: N:\Dept_1240\112864634 AF Sheberghan Feasibility\CAD\Working\112864634-1511.dwg
Last saved: Tue, 25 Oct 2005 11:14 am

maunsell

Maunsell Limited
An AECOM COMPANY

AEAI/USAID
AEAI Delivery Order No: 801-MAU-1

SHEBERGHAN POWER PLANT

CONTROL SYSTEM BLOCK DIAGRAM

Status: ISSUE

Drg No: 112864634-1511

Rev: F

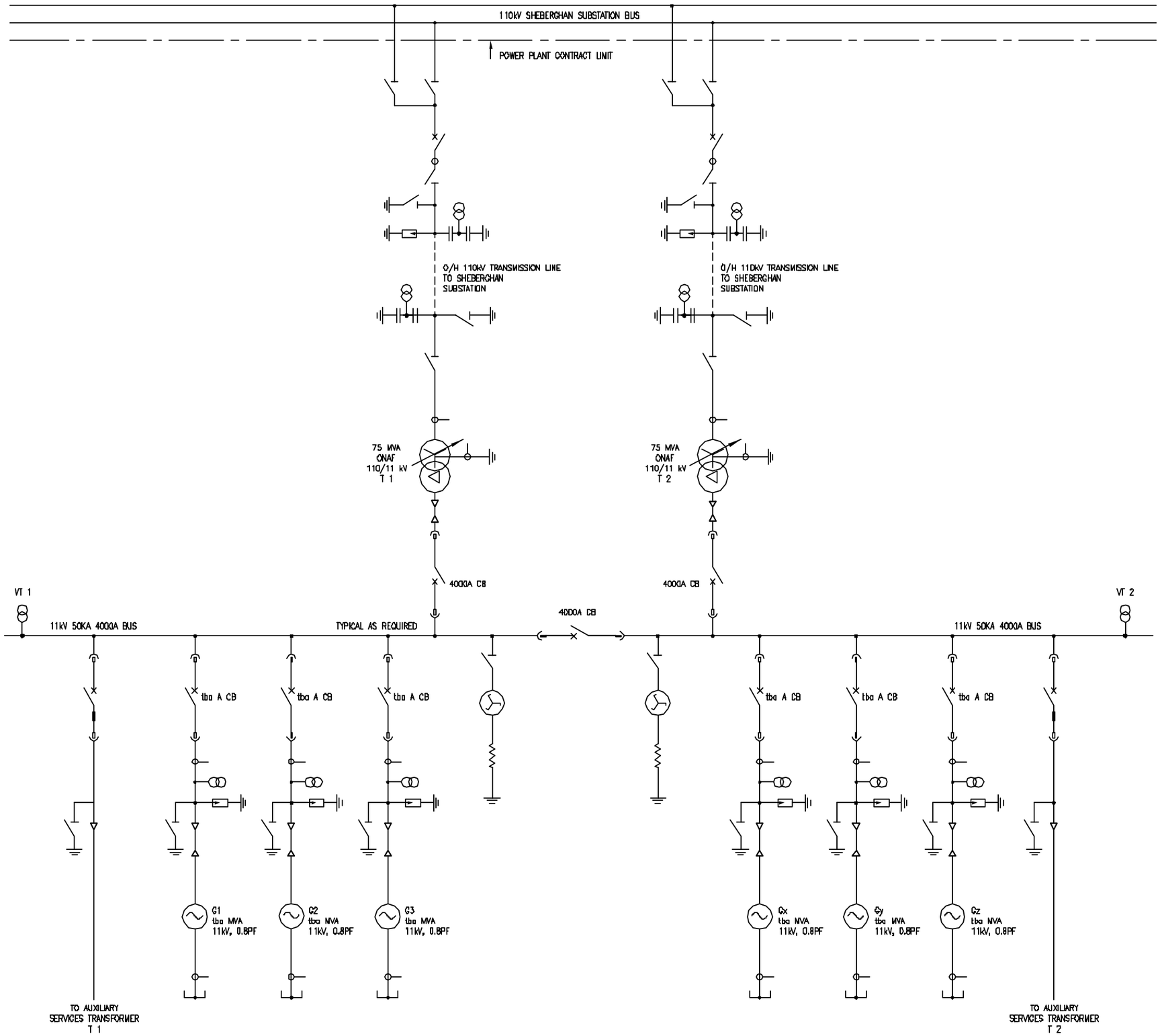

© Copyright Maunsell Limited, 2003.

This drawing is confidential and shall only be used for the purposes of this project.

No.	BY	DATE	DESCRIPTION	APPD
F	ES	OCT 15	ADDED DOUBLE BAS AT SHEBERGHAN SUBSTATION	
E	DLW	SEP. 15	RE ISSUED FOR TENDER	DJP
D	PM	AUG 15	ISSUED FOR TENDER	
C	ES	MAY 15	ISSUED FOR FINAL REPORT	WSC
B	ES	MAY 15	STAGE 2 ADDED	WSC
A	ES	MAY 15	ISSUED FOR REPORT	

Scales

N.T.S.

THE SIGNING OF THIS TITLE BLOCK CONFIRMS THE DESIGN AND DRAFTING OF THIS PROJECT HAVE BEEN PREPARED AND CHECKED IN ACCORDANCE WITH THE MAUNSELL QUALITY ASSURANCE SYSTEM CERTIFIED TO AS/NZS ISO 9001-2000

DESIGNED	RHV	CHECKED	DJP
DRAWN	FA	CHECKED	
APPROVED	WSC	DATE	MAY 15

CAD Path: N:\Dept_112864634_AF Sheberghan Power Plant\Fly\CAD\Working\112864634-1512.dwg
Last saved: Tue, 25 Oct 2006 11:15 am

maunsell

Maunsell Limited
AN AECOM COMPANY

AEAI/USAID
AEAI Delivery Order No: 801-MAU-1

SHEBERGHAN POWER PLANT

POWER PLANT
11 kV SINGLE LINE DIAGRAM

Status	Drg No.	Rev.
ISSUE	112864634-1512	F

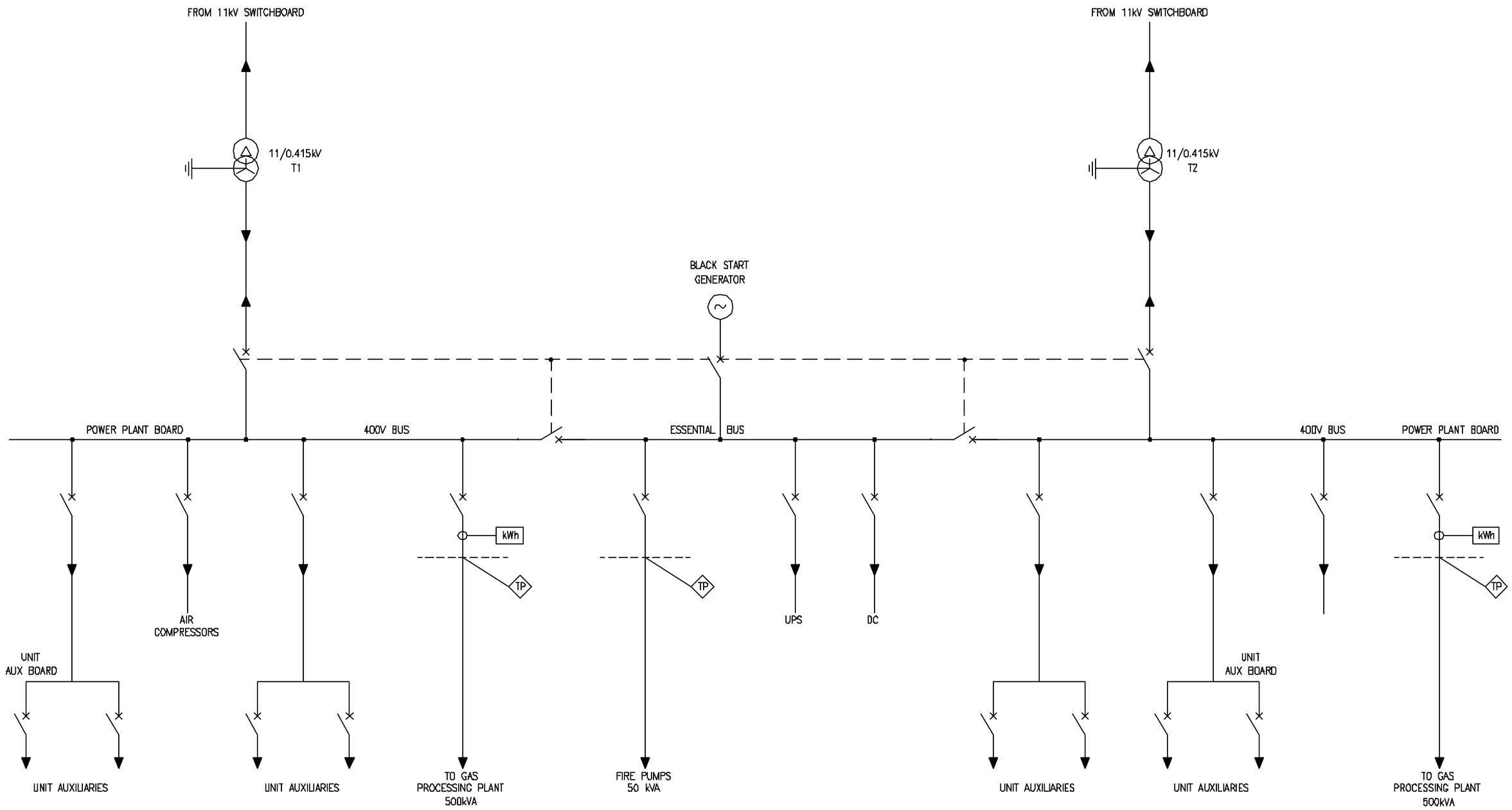

LEGEND

TP CONTRACTURAL TIE POINT

© Copyright Maunsell Limited, 2005.

This drawing is confidential and shall only be used for the purposes of this project.

No.	BY	DATE	DESCRIPTION	APPD
D	ES	OCT 15	ESSENTIAL BUS ADDED	
C	DLW	SEP. 15	RE ISSUED FOR TENDER	DJP
B	PM	AUG. 15	ISSUED FOR TENDER	WSC
A	PM	MAY 15	ISSUED FOR FINAL REPORT	WSC

Status

N.T.S.

THE SIGNING OF THIS TITLE BLOCK CONFIRMS THE DESIGN AND DRAFTING OF THIS PROJECT HAVE BEEN PREPARED AND CHECKED IN ACCORDANCE WITH THE MAUNSELL QUALITY ASSURANCE SYSTEM CERTIFIED TO AS/NZS ISO 9001-2000

DESIGNED	RHW	CHECKED	
DRAWN	PM	CHECKED	
APPROVED		DATE	MAY 15

CAD Path: M:\Dept_...\12864634 AF Sheberghan Feasibility\CAD\Working\112864634-1513.dwg
Last saved: Tue, 25 Oct 2006 11:27 am

maunsell

Maunsell Limited
AN AECOM COMPANY

AEAI/USAID
AEAI Delivery Order No: 801-MAU-1

SHEBERGHAN POWER PLANT

POWER PLANT
410V SINGLE LINE DIAGRAM

Status: ISSUE

Drg No: 112864634-1513

Rev: D

U.S. Agency for International Development
1300 Pennsylvania Avenue, NW
Washington, DC 20523
Tel: (202) 712-0000
Fax: (202) 216-3524
www.usaid.gov